ENGINEERING BY TRENCO
A MiTek Affiliate

RE: P05928-31416
914 Serenity

Trenco
818 Soundside Rd
Edenton, NC 27932

Site Information:

Customer: David Weekly Project Name: P05928-31416
Lot/Block: Model: A671 CAPSTONE / ELEV C / LH
Address: 53 Rainbrook Cove Subdivision:
City: FUQUAY VARINA State: NC

General Truss Engineering Criteria & Design Loads (Individual Truss Design Drawings Show Special Loading Conditions):

Design Code: IRC2018/TPI2014 Design Program: MiTek 20/20 8.8
Wind Code: ASCE 7-16 Wind Speed: 115 mph
Roof Load: 40.0 psf Floor Load: N/A psf

This package includes 44 individual, dated Truss Design Drawings and 0 Additional Drawings.

No.	Seal#	Truss Name	Date	No.	Seal#	Truss Name	Date
1	I74944955	A01	7/17/2025	21	I74944975	D02	7/17/2025
2	I74944956	A02	7/17/2025	22	I74944976	J01	7/17/2025
3	I74944957	A05E	7/17/2025	23	I74944977	J02	7/17/2025
4	I74944958	B01E	7/17/2025	24	I74944978	J03	7/17/2025
5	I74944959	B02	7/17/2025	25	I74944979	J04	7/17/2025
6	I74944960	B03	7/17/2025	26	I74944980	P01E	7/17/2025
7	I74944961	B04G	7/17/2025	27	I74944981	P02	7/17/2025
8	I74944962	C01E	7/17/2025	28	I74944982	P03G	7/17/2025
9	I74944963	C02	7/17/2025	29	I74944983	P04	7/17/2025
10	I74944964	C03	7/17/2025	30	I74944984	P05	7/17/2025
11	I74944965	C04	7/17/2025	31	I74944985	P06	7/17/2025
12	I74944966	C05	7/17/2025	32	I74944986	P07G	7/17/2025
13	I74944967	C06	7/17/2025	33	I74944987	P08	7/17/2025
14	I74944968	C07	7/17/2025	34	I74944988	V01	7/17/2025
15	I74944969	C08	7/17/2025	35	I74944989	V02	7/17/2025
16	I74944970	C09	7/17/2025	36	I74944990	V03	7/17/2025
17	I74944971	C10	7/17/2025	37	I74944991	V04	7/17/2025
18	I74944972	C11	7/17/2025	38	I74944992	V05	7/17/2025
19	I74944973	C12G	7/17/2025	39	I74944993	V06	7/17/2025
20	I74944974	D01E	7/17/2025	40	I74944994	V07	7/17/2025

The truss drawing(s) referenced above have been prepared by
Truss Engineering Co. under my direct supervision
based on the parameters provided by 84 Lumber 2383 (Dunn, NC).

Truss Design Engineer's Name: Gilbert, Eric

My license renewal date for the state of North Carolina is December 31, 2025.

North Carolina COA: C-0844

IMPORTANT NOTE: The seal on these truss component designs is a certification that the engineer named is licensed in the jurisdiction(s) identified and that the designs comply with ANSI/TPI 1. These designs are based upon parameters shown (e.g., loads, supports, dimensions, shapes and design codes), which were given to TRENCO. Any project specific information included is for TRENCO customers file reference purpose only, and was not taken into account in the preparation of these designs. TRENCO has not independently verified the applicability of the design parameters or the designs for any particular building. Before use, the building designer should verify applicability of design parameters and properly incorporate these designs into the overall building design per ANSI/TPI 1, Chapter 2.

NORTH CAROLINA PROFESSIONAL SEAL 036322 ENGINEER ERIC A. GILBERT

July 17, 2025

Gilbert, Eric

RE: P05928-31416 - 914 Serenity

Trenco
818 Soundside Rd
Edenton, NC 27932

Site Information:

Project Customer: David Weekly Project Name: P05928-31416
Lot/Block: Subdivision:
Address: 53 Rainbrook Cove
City, County: FUQUAY VARINA State: NC

No.	Seal#	Truss Name	Date
41	I74944995	V08	7/17/2025
42	I74944996	V09	7/17/2025
43	I74944997	V10	7/17/2025
44	I74944998	V11	7/17/2025

Job	Truss	Truss Type	Qty	Ply	914 Serenity
P05928-31416	A01	Monopitch	5	1	I74944955 Job Reference (optional)

84 Lumber-2383 (Dunn, NC), Dunn, NC - 28334, Run: 8.83 S Jun 11 2025 Print: 8.830 S Jun 11 2025 MiTek Industries, Inc. Wed Jul 16 10:26:31 Page: 1

ID:dNMLdb?HScrdvt4cqsvDwbzxCBa-RfC?PsB70Hq3NSgPqnL8w3uITXbGKWrCDoi7J4zJC?f

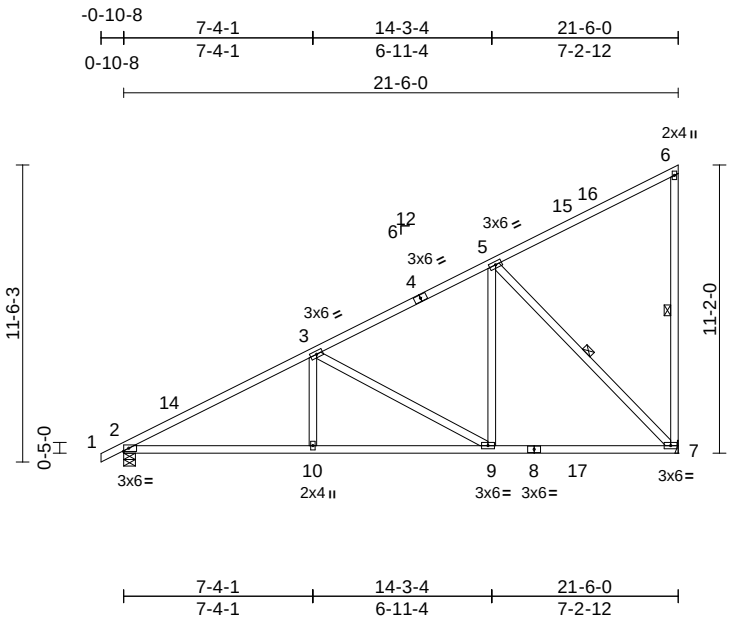

Scale = 1:89.3

Loading	(psf)	Spacing	2-0-0	CSI		DEFL	in	(loc)	l/defl	L/d	PLATES	GRIP
TCLL (roof)	20.0	Plate Grip DOL	1.15	TC	0.64	Vert(LL)	-0.12	7-9	>999	240	MT20	244/190
Snow (Pf/Pg)	7.7/10.0	Lumber DOL	1.15	BC	0.70	Vert(CT)	-0.20	10-13	>999	180		
TCDL	10.0	Rep Stress Incr	YES	WB	0.74	Horz(CT)	0.04	7	n/a	n/a		
BCLL	0.0*	Code	IRC2018/TPI2014	Matrix-MS								
BCDL	10.0										Weight: 126 lb	FT = 20%

LUMBER

TOP CHORD 2x4 SP No.2
BOT CHORD 2x4 SP No.2
WEBS 2x4 SP No.2

BRACING

TOP CHORD Structural wood sheathing directly applied or 4-0-14 oc purlins, except end verticals.
BOT CHORD Rigid ceiling directly applied or 10-0-0 oc bracing.
WEBS 1 Row at midpt 6-7, 5-7

REACTIONS (size) 2=0-5-8, 7= Mechanical
Max Horiz 2=317 (LC 16)
Max Uplift 2=-47 (LC 16), 7=-192 (LC 16)
Max Grav 2=965 (LC 3), 7=944 (LC 3)

FORCES (lb) - Maximum Compression/Maximum Tension
TOP CHORD 1-2=0/23, 2-3=-1497/39, 3-5=-831/2, 5-6=-125/71, 6-7=-176/70
BOT CHORD 2-10=-272/1278, 9-10=-272/1278, 7-9=-137/675
WEBS 3-10=0/293, 3-9=-687/154, 5-9=-23/635, 5-7=-952/193

NOTES

1) Unbalanced roof live loads have been considered for this design.
2) Wind: ASCE 7-16; Vult=115mph (3-second gust) Vasd=91mph; TCDL=6.0psf; BCDL=3.0psf; h=25ft; Cat. II; Exp B; Enclosed; MWFRS (envelope) exterior zone and C-C Exterior(2E) -0-10-8 to 2-1-8, Interior (1) 2-1-8 to 21-4-4 zone; cantilever left and right exposed ; end vertical left exposed;C-C for members and forces & MWFRS for reactions shown; Lumber DOL=1.60 plate grip DOL=1.60
3) TCLL: ASCE 7-16; Pr=20.0 psf (roof LL: Lum DOL=1.15 Plate DOL=1.15); Pg=10.0 psf; Pf=7.7 psf (Lum DOL = 1.15 Plate DOL = 1.15); Is=1.0; Rough Cat B; Partially Exp.; Ce=1.0; Cs=1.00; Ct=1.10
4) Unbalanced snow loads have been considered for this design.
5) This truss has been designed for greater of min roof live load of 12.0 psf or 1.00 times flat roof load of 7.7 psf on overhangs non-concurrent with other live loads.
6) Building Designer/Project engineer responsible for verifying Rain Load = 5.0 (psf) covers rain loading requirements specific to the use of this truss component.
7) This truss has been designed for a 10.0 psf bottom chord live load nonconcurrent with any other live loads.
8) * This truss has been designed for a live load of 20.0psf on the bottom chord in all areas where a rectangle 3-06-00 tall by 2-00-00 wide will fit between the bottom chord and any other members, with BCDL = 10.0psf.
9) Refer to girder(s) for truss to truss connections.
10) Provide mechanical connection (by others) of truss to bearing plate capable of withstanding 47 lb uplift at joint 2 and 192 lb uplift at joint 7.
11) This truss is designed in accordance with the 2018 International Residential Code sections R502.11.1 and R802.10.2 and referenced standard ANSI/TPI 1.

LOAD CASE(S) Standard

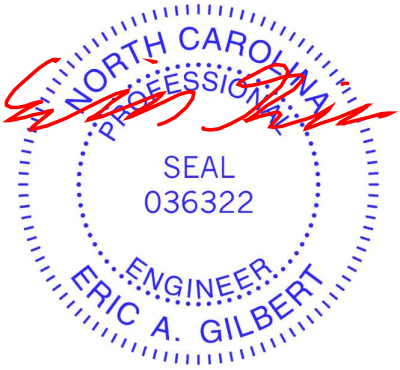

July 17,2025

WARNING - Verify design parameters and READ NOTES ON THIS AND INCLUDED MITEK REFERENCE PAGE MII-7473 rev. 1/2/2023 BEFORE USE.
Design valid for use only with MiTek® connectors. This design is based only upon parameters shown, and is for an individual building component, not a truss system. Before use, the building designer must verify the applicability of design parameters and properly incorporate this design into the overall building design. Bracing indicated is to prevent buckling of individual truss web and/or chord members only. Additional temporary and permanent bracing is always required for stability and to prevent collapse with possible personal injury and property damage. For general guidance regarding the fabrication, storage, delivery, erection and bracing of trusses and truss systems, see **ANSI/TPI1 Quality Criteria and DSB-22** available from Truss Plate Institute (www.tpinst.org) and **BCSI Building Component Safety Information** available from the Structural Building Component Association (www.sbcacomponents.com)

ENGINEERING BY TRENCO A MiTek Affiliate
818 Soundside Road
Edenton, NC 27932

Job	Truss	Truss Type	Qty	Ply	914 Serenity
P05928-31416	A02	Monopitch	4	1	I74944956 Job Reference (optional)

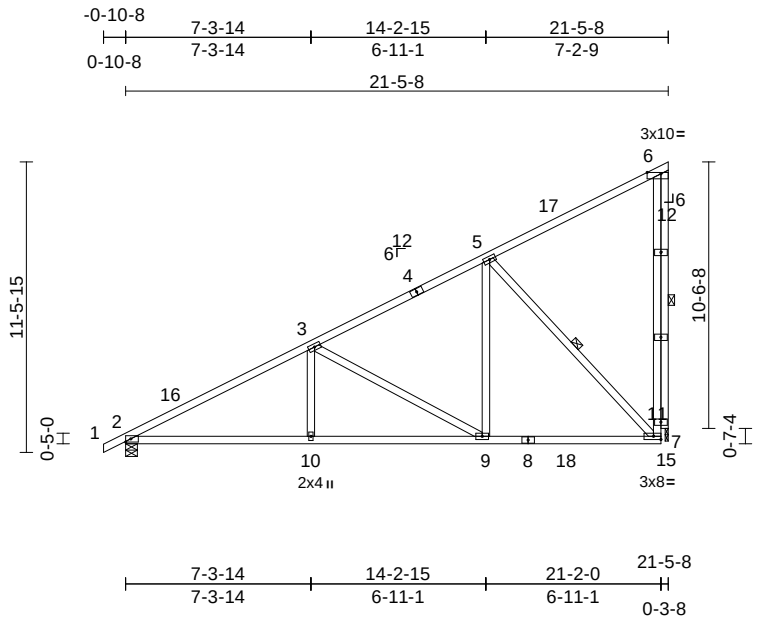

Scale = 1:91.1

Plate Offsets (X, Y): [6:0-6-8,Edge]

Loading	(psf)	Spacing	2-0-0	CSI		DEFL	in	(loc)	l/defl	L/d	PLATES	GRIP
TCLL (roof)	20.0	Plate Grip DOL	1.15	TC	0.58	Vert(LL)	-0.10	10-14	>999	240	MT20	244/190
Snow (Pf/Pg)	7.7/10.0	Lumber DOL	1.15	BC	0.69	Vert(CT)	-0.20	10-14	>999	180		
TCDL	10.0	Rep Stress Incr	YES	WB	0.75	Horz(CT)	0.03	15	n/a	n/a		
BCLL	0.0*	Code	IRC2018/TPI2014	Matrix-MS								
BCDL	10.0										Weight: 140 lb	FT = 20%

LUMBER

TOP CHORD	2x4 SP No.2
BOT CHORD	2x4 SP No.2
WEBS	2x4 SP No.2
OTHERS	2x4 SP No.2

BRACING

TOP CHORD	Structural wood sheathing directly applied or 4-1-3 oc purlins, except end verticals.
BOT CHORD	Rigid ceiling directly applied or 10-0-0 oc bracing.
WEBS	1 Row at midpt 5-7, 6-15

REACTIONS (size) 2=0-5-8, 15=0-1-8
Max Horiz 2=312 (LC 16)
Max Uplift 2=-50 (LC 16), 15=-186 (LC 16)
Max Grav 2=966 (LC 3), 15=912 (LC 3)

FORCES (lb) - Maximum Compression/Maximum Tension

TOP CHORD	1-2=0/23, 2-3=-1502/46, 3-5=-832/7, 5-6=-149/37, 7-11=-121/787, 6-11=-121/787
BOT CHORD	2-10=-273/1284, 9-10=-273/1284, 7-9=-137/675
WEBS	3-10=0/296, 3-9=-693/155, 5-9=-25/624, 5-7=-921/187, 6-15=-913/186

NOTES

1) Unbalanced roof live loads have been considered for this design.
2) Wind: ASCE 7-16; Vult=115mph (3-second gust) Vasd=91mph; TCDL=6.0psf; BCDL=3.0psf; h=25ft; Cat. II; Exp B; Enclosed; MWFRS (envelope) exterior zone and C-C Exterior(2E) -0-10-8 to 2-1-8, Interior (1) 2-1-8 to 21-0-4 zone; cantilever left and right exposed ; end vertical left exposed;C-C for members and forces & MWFRS for reactions shown; Lumber DOL=1.60 plate grip DOL=1.60
3) TCLL: ASCE 7-16; Pr=20.0 psf (roof LL: Lum DOL=1.15 Plate DOL=1.15); Pg=10.0 psf; Pf=7.7 psf (Lum DOL = 1.15 Plate DOL = 1.15); Is=1.0; Rough Cat B; Partially Exp.; Ce=1.0; Cs=1.00; Ct=1.10
4) Unbalanced snow loads have been considered for this design.
5) This truss has been designed for greater of min roof live load of 12.0 psf or 1.00 times flat roof load of 7.7 psf on overhangs non-concurrent with other live loads.
6) Building Designer/Project engineer responsible for verifying Rain Load = 5.0 (psf) covers rain loading requirements specific to the use of this truss component.
7) All plates are 3x6 (=) MT20 unless otherwise indicated.
8) This truss has been designed for a 10.0 psf bottom chord live load nonconcurrent with any other live loads.
9) * This truss has been designed for a live load of 20.0psf on the bottom chord in all areas where a rectangle 3-06-00 tall by 2-00-00 wide will fit between the bottom chord and any other members, with BCDL = 10.0psf.
10) Bearing at joint(s) 15 considers parallel to grain value using ANSI/TPI 1 angle to grain formula. Building designer should verify capacity of bearing surface.
11) Provide mechanical connection (by others) of truss to bearing plate at joint(s) 15.
12) Provide mechanical connection (by others) of truss to bearing plate capable of withstanding 50 lb uplift at joint 2 and 186 lb uplift at joint 15.
13) This truss is designed in accordance with the 2018 International Residential Code sections R502.11.1 and R802.10.2 and referenced standard ANSI/TPI 1.

LOAD CASE(S) Standard

July 17,2025

WARNING - Verify design parameters and READ NOTES ON THIS AND INCLUDED MITEK REFERENCE PAGE MII-7473 rev. 1/2/2023 BEFORE USE.
Design valid for use only with MiTek® connectors. This design is based only upon parameters shown, and is for an individual building component, not a truss system. Before use, the building designer must verify the applicability of design parameters and properly incorporate this design into the overall building design. Bracing indicated is to prevent buckling of individual truss web and/or chord members only. Additional temporary and permanent bracing is always required for stability and to prevent collapse with possible personal injury and property damage. For general guidance regarding the fabrication, storage, delivery, erection and bracing of trusses and truss systems, see **ANSI/TPI1 Quality Criteria and DSB-22** available from Truss Plate Institute (www.tpinst.org) and **BCSI Building Component Safety Information** available from the Structural Building Component Association (www.sbcacomponents.com)

ENGINEERING BY TRENCO A MiTek Affiliate
818 Soundside Road
Edenton, NC 27932

Job	Truss	Truss Type	Qty	Ply	914 Serenity
P05928-31416	A05E	Monopitch Supported Gable	1	1	I74944957 Job Reference (optional)

84 Lumber-2383 (Dunn, NC), Dunn, NC - 28334, Run: 8.83 S Jun 11 2025 Print: 8.830 S Jun 11 2025 MiTek Industries, Inc. Wed Jul 16 10:26:33 Page: 1
ID:5awjqx0vCwzUX1foOaQSTpzxCBZ-RfC?PsB70Hq3NSgPqnL8w3uITXbGKWrCDoi7J4zJC?f

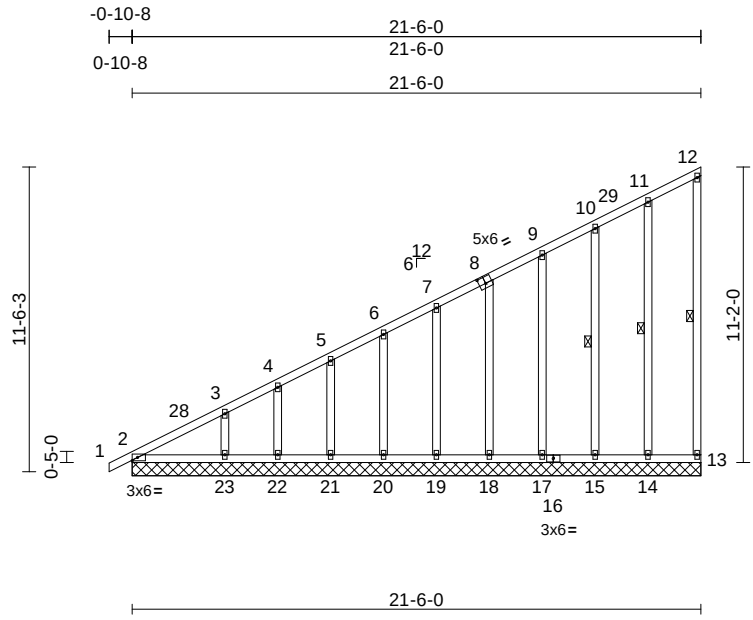

Scale = 1:87.1

Plate Offsets (X, Y): [8:0-3-0,0-3-0]

Loading	(psf)	Spacing	2-0-0	CSI		DEFL	in	(loc)	l/defl	L/d	PLATES	GRIP
TCLL (roof)	20.0	Plate Grip DOL	1.15	TC	0.14	Vert(LL)	n/a	-	n/a	999	MT20	244/190
Snow (Pf/Pg)	7.7/10.0	Lumber DOL	1.15	BC	0.09	Vert(CT)	n/a	-	n/a	999		
TCDL	10.0	Rep Stress Incr	NO	WB	0.14	Horz(CT)	0.00	2	n/a	n/a		
BCLL	0.0*	Code	IRC2018/TPI2014	Matrix-MS								
BCDL	10.0										Weight: 160 lb	FT = 20%

LUMBER

TOP CHORD	2x4 SP No.2
BOT CHORD	2x4 SP No.2
WEBS	2x4 SP No.2
OTHERS	2x4 SP No.2

BRACING

TOP CHORD	Structural wood sheathing directly applied or 6-0-0 oc purlins, except end verticals.
BOT CHORD	Rigid ceiling directly applied or 10-0-0 oc bracing.
WEBS	1 Row at midpt 12-13, 11-14, 10-15

REACTIONS (size) 2=21-6-0, 13=21-6-0, 14=21-6-0, 15=21-6-0, 17=21-6-0, 18=21-6-0, 19=21-6-0, 20=21-6-0, 21=21-6-0, 22=21-6-0, 23=21-6-0
Max Horiz 2=317 (LC 16)
Max Uplift 13=-17 (LC 16), 14=-42 (LC 16), 15=-40 (LC 16), 17=-43 (LC 16), 18=-40 (LC 16), 19=-34 (LC 16), 20=-38 (LC 16), 21=-42 (LC 16), 22=-20 (LC 16), 23=-80 (LC 16)
Max Grav 2=195 (LC 32), 13=77 (LC 2), 14=211 (LC 2), 15=192 (LC 2), 17=200 (LC 2), 18=187 (LC 2), 19=174 (LC 2), 20=179 (LC 2), 21=186 (LC 2), 22=127 (LC 2), 23=281 (LC 2)

FORCES (lb) - Maximum Compression/Maximum Tension
TOP CHORD 1-2=0/23, 2-3=-375/188, 3-4=-320/151, 4-5=-291/140, 5-6=-254/120, 6-7=-218/102, 7-9=-185/85, 9-10=-114/49, 10-11=-77/31, 11-12=-31/15, 12-13=-46/35
BOT CHORD 2-23=-91/66, 22-23=-2/4, 21-22=-2/4, 20-21=-2/4, 19-20=-2/4, 18-19=-2/4, 17-18=0/0, 15-17=0/0, 14-15=0/0, 13-14=0/0
WEBS 11-14=-125/91, 10-15=-118/60, 9-17=-129/58, 8-18=-119/57, 7-19=-110/50, 6-20=-121/56, 5-21=-125/59, 4-22=-95/42, 3-23=-187/101

NOTES

1) Unbalanced roof live loads have been considered for this design.
2) Wind: ASCE 7-16; Vult=115mph (3-second gust) Vasd=91mph; TCDL=6.0psf; BCDL=3.0psf; h=25ft; Cat. II; Exp B; Enclosed; MWFRS (envelope) exterior zone and C-C Corner(3E) -0-10-8 to 2-1-8, Exterior(2N) 2-1-8 to 21-4-4 zone; cantilever left and right exposed ; end vertical left exposed;C-C for members and forces & MWFRS for reactions shown; Lumber DOL=1.60 plate grip DOL=1.60
3) Truss designed for wind loads in the plane of the truss only. For studs exposed to wind (normal to the face), see Standard Industry Gable End Details as applicable, or consult qualified building designer as per ANSI/TPI 1.
4) TCLL: ASCE 7-16; Pr=20.0 psf (roof LL: Lum DOL=1.15 Plate DOL=1.15); Pg=10.0 psf; Pf=7.7 psf (Lum DOL = 1.15 Plate DOL = 1.15); Is=1.0; Rough Cat B; Partially Exp.; Ce=1.0; Cs=1.00; Ct=1.10
5) Unbalanced snow loads have been considered for this design.
6) This truss has been designed for greater of min roof live load of 12.0 psf or 1.00 times flat roof load of 7.7 psf on overhangs non-concurrent with other live loads.
7) Building Designer/Project engineer responsible for verifying Rain Load = 5.0 (psf) covers rain loading requirements specific to the use of this truss component.
8) All plates are 2x4 (||) MT20 unless otherwise indicated.
9) Gable requires continuous bottom chord bearing.
10) Gable studs spaced at 2-0-0 oc.
11) This truss has been designed for a 10.0 psf bottom chord live load nonconcurrent with any other live loads.
12) * This truss has been designed for a live load of 20.0psf on the bottom chord in all areas where a rectangle 3-06-00 tall by 2-00-00 wide will fit between the bottom chord and any other members.
13) Provide mechanical connection (by others) of truss to bearing plate capable of withstanding 17 lb uplift at joint 13, 42 lb uplift at joint 14, 40 lb uplift at joint 15, 43 lb uplift at joint 17, 40 lb uplift at joint 18, 34 lb uplift at joint 19, 38 lb uplift at joint 20, 42 lb uplift at joint 21, 20 lb uplift at joint 22 and 80 lb uplift at joint 23.
14) This truss is designed in accordance with the 2018 International Residential Code sections R502.11.1 and R802.10.2 and referenced standard ANSI/TPI 1.
15) In the LOAD CASE(S) section, loads applied to the face of the truss are noted as front (F) or back (B).

LOAD CASE(S) Standard
1) Dead + Snow (balanced): Lumber Increase=1.15, Plate Increase=1.15
Uniform Loads (lb/ft)
Vert: 1-12=-35
Trapezoidal Loads (lb/ft)

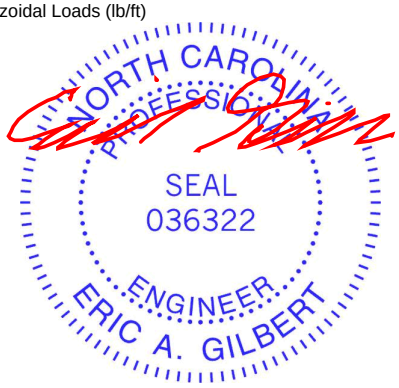

July 17,2025

Continued on page 2

WARNING - Verify design parameters and READ NOTES ON THIS AND INCLUDED MITEK REFERENCE PAGE MII-7473 rev. 1/2/2023 BEFORE USE.
Design valid for use only with MiTek® connectors. This design is based only upon parameters shown, and is for an individual building component, not a truss system. Before use, the building designer must verify the applicability of design parameters and properly incorporate this design into the overall building design. Bracing indicated is to prevent buckling of individual truss web and/or chord members only. Additional temporary and permanent bracing is always required for stability and to prevent collapse with possible personal injury and property damage. For general guidance regarding the fabrication, storage, delivery, erection and bracing of trusses and truss systems, see **ANSI/TPI1 Quality Criteria and DSB-22** available from Truss Plate Institute (www.tpinst.org) and **BCSI Building Component Safety Information** available from the Structural Building Component Association (www.sbcacomponents.com)

ENGINEERING BY TRENCO A MiTek Affiliate
818 Soundside Road
Edenton, NC 27932

Vert: 24=-20-to-26=-20 (F=0), 26=-20 (F=0)-
to-23=-22 (F=-2), 23=-22 (F=-2)-to-22=-24 (F=-4),
22=-24 (F=-4)-to-21=-25 (F=-5), 21=-25 (F=-5)-
to-20=-27 (F=-7), 20=-27 (F=-7)-to-19=-28 (F=-8),
19=-28 (F=-8)-to-18=-29 (F=-9), 18=-29 (F=-9)-
to-17=-31 (F=-11), 17=-31 (F=-11)-to-16=-31 (F=-11),
16=-31 (F=-11)-to-15=-32 (F=-12), 15=-32 (F=-12)-
to-14=-34 (F=-14), 14=-34 (F=-14)-to-13=-35 (F=-15)

NORTH CAROLINA
PROFESSIONAL
SEAL
036322
ENGINEER
ERIC A. GILBERT

July 17,2025

WARNING - Verify design parameters and READ NOTES ON THIS AND INCLUDED MITEK REFERENCE PAGE MII-7473 rev. 1/2/2023 BEFORE USE.
Design valid for use only with MiTek® connectors. This design is based only upon parameters shown, and is for an individual building component, not a truss system. Before use, the building designer must verify the applicability of design parameters and properly incorporate this design into the overall building design. Bracing indicated is to prevent buckling of individual truss web and/or chord members only. Additional temporary and permanent bracing is always required for stability and to prevent collapse with possible personal injury and property damage. For general guidance regarding the fabrication, storage, delivery, erection and bracing of trusses and truss systems, see **ANSI/TPI1 Quality Criteria and DSB-22** available from Truss Plate Institute (www.tpinst.org) and **BCSI Building Component Safety Information** available from the Structural Building Component Association (www.sbcacomponents.com)

ENGINEERING BY TRENCO A MiTek Affiliate
818 Soundside Road
Edenton, NC 27932

Job	Truss	Truss Type	Qty	Ply	914 Serenity
P05928-31416	B01E	Common Supported Gable	1	1	I74944958 Job Reference (optional)

84 Lumber-2383 (Dunn, NC), Dunn, NC - 28334, Run: 8.83 S Jun 11 2025 Print: 8.830 S Jun 11 2025 MiTek Industries, Inc. Wed Jul 16 10:26:33 Page: 1
ID:yTQv5fjv4PUkMdXMHATQUuzxXRU-RfC?PsB70Hq3NSgPqnL8w3uITXbGKWrCDoi7J4zJC?f

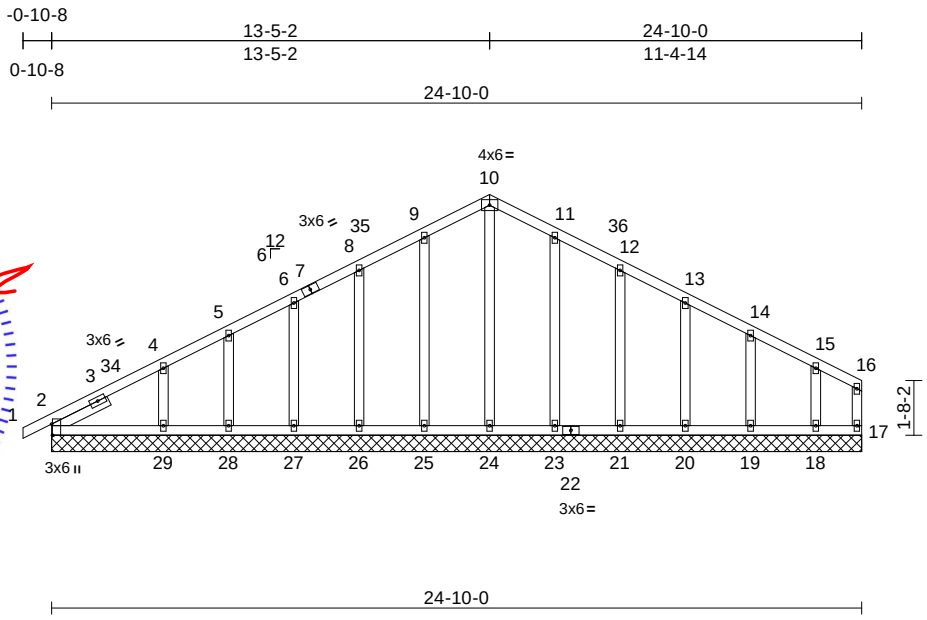

NORTH CAROLINA PROFESSIONAL SEAL 036322 ENGINEER ERIC A. GILBERT

Scale = 1:70.6

Plate Offsets (X, Y): [2:0-4-1,Edge]

Loading	(psf)	Spacing	2-0-0	CSI		DEFL	in	(loc)	l/defl	L/d	PLATES	GRIP
TCLL (roof)	20.0	Plate Grip DOL	1.15	TC	0.13	Vert(LL)	n/a	-	n/a	999	MT20	244/190
Snow (Pf/Pg)	7.7/10.0	Lumber DOL	1.15	BC	0.08	Vert(CT)	n/a	-	n/a	999		
TCDL	10.0	Rep Stress Incr	NO	WB	0.12	Horz(CT)	0.00	2	n/a	n/a		
BCLL	0.0*	Code	IRC2018/TPI2014	Matrix-MS								
BCDL	10.0										Weight: 152 lb	FT = 20%

LUMBER

TOP CHORD	2x4 SP No.2
BOT CHORD	2x4 SP No.2
WEBS	2x4 SP No.2
OTHERS	2x4 SP No.2
SLIDER	Left 2x4 SP No.2 -- 1-11-0

BRACING

TOP CHORD	Structural wood sheathing directly applied or 6-0-0 oc purlins, except end verticals.
BOT CHORD	Rigid ceiling directly applied or 10-0-0 oc bracing.

REACTIONS (size) 2=24-10-0, 17=24-10-0, 18=24-10-0, 19=24-10-0, 20=24-10-0, 21=24-10-0, 23=24-10-0, 24=24-10-0, 25=24-10-0, 26=24-10-0, 27=24-10-0, 28=24-10-0, 29=24-10-0
Max Horiz 2=96 (LC 15)
Max Uplift 2=-23 (LC 17), 17=-4 (LC 16), 18=-60 (LC 17), 19=-39 (LC 17), 20=-40 (LC 17), 21=-41 (LC 17), 23=-37 (LC 17), 25=-38 (LC 16), 26=-38 (LC 16), 27=-41 (LC 16), 28=-21 (LC 16), 29=-79 (LC 16)
Max Grav 2=181 (LC 2), 17=64 (LC 33), 18=173 (LC 37), 19=204 (LC 2), 20=193 (LC 37), 21=190 (LC 2), 23=196 (LC 37), 24=185 (LC 33), 25=189 (LC 36), 26=173 (LC 2), 27=183 (LC 36), 28=130 (LC 2), 29=271 (LC 36)

FORCES (lb) - Maximum Compression/Maximum Tension

TOP CHORD 1-2=0/23, 2-4=-94/73, 4-5=-79/80, 5-6=-65/98, 6-8=-69/133, 8-9=-82/169, 9-10=-94/202, 10-11=-94/202, 11-12=-82/169, 12-13=-69/132, 13-14=-57/97, 14-15=-44/61, 15-16=-40/26, 16-17=-37/14

BOT CHORD 2-29=-20/38, 28-29=-20/38, 27-28=-20/38, 26-27=-20/38, 25-26=-20/38, 24-25=-20/38, 23-24=-20/38, 21-23=-20/38, 20-21=-20/38, 19-20=-20/38, 18-19=-20/38, 17-18=-20/38

WEBS 10-24=-133/16, 9-25=-129/52, 8-26=-118/57, 6-27=-126/58, 5-28=-97/45, 4-29=-183/95, 11-23=-129/51, 12-21=-119/58, 13-20=-119/55, 14-19=-124/73, 15-18=-103/93

NOTES

1) Unbalanced roof live loads have been considered for this design.
2) Wind: ASCE 7-16; Vult=115mph (3-second gust) Vasd=91mph; TCDL=6.0psf; BCDL=3.0psf; h=25ft; Cat. II; Exp B; Enclosed; MWFRS (envelope) exterior zone and C-C Corner(3E) -0-10-8 to 2-1-8, Exterior(2N) 2-1-8 to 13-5-2, Corner(3R) 13-5-2 to 16-5-2, Exterior(2N) 16-5-2 to 24-8-4 zone; cantilever left and right exposed ; end vertical left and right exposed;C-C for members and forces & MWFRS for reactions shown; Lumber DOL=1.60 plate grip DOL=1.60
3) Truss designed for wind loads in the plane of the truss only. For studs exposed to wind (normal to the face), see Standard Industry Gable End Details as applicable, or consult qualified building designer as per ANSI/TPI 1.
4) TCLL: ASCE 7-16; Pr=20.0 psf (roof LL: Lum DOL=1.15 Plate DOL=1.15); Pg=10.0 psf; Pf=7.7 psf (Lum DOL = 1.15 Plate DOL = 1.15); Is=1.0; Rough Cat B; Partially Exp.; Ce=1.0; Cs=1.00; Ct=1.10
5) Unbalanced snow loads have been considered for this design.
6) This truss has been designed for greater of min roof live load of 12.0 psf or 1.00 times flat roof load of 7.7 psf on overhangs non-concurrent with other live loads.
7) Building Designer/Project engineer responsible for verifying Rain Load = 5.0 (psf) covers rain loading requirements specific to the use of this truss component.
8) All plates are 2x4 (||) MT20 unless otherwise indicated.
9) Gable requires continuous bottom chord bearing.
10) Gable studs spaced at 2-0-0 oc.
11) This truss has been designed for a 10.0 psf bottom chord live load nonconcurrent with any other live loads.
12) * This truss has been designed for a live load of 20.0psf on the bottom chord in all areas where a rectangle 3-06-00 tall by 2-00-00 wide will fit between the bottom chord and any other members.
13) Provide mechanical connection (by others) of truss to bearing plate capable of withstanding 23 lb uplift at joint 2, 4 lb uplift at joint 17, 38 lb uplift at joint 25, 38 lb uplift at joint 26, 41 lb uplift at joint 27, 21 lb uplift at joint 28, 79 lb uplift at joint 29, 37 lb uplift at joint 23, 41 lb uplift at joint 21, 40 lb uplift at joint 20, 39 lb uplift at joint 19, 60 lb uplift at joint 18 and 23 lb uplift at joint 2.

July 17,2025

Continued on page 2

WARNING - Verify design parameters and READ NOTES ON THIS AND INCLUDED MITEK REFERENCE PAGE MII-7473 rev. 1/2/2023 BEFORE USE.
Design valid for use only with MiTek® connectors. This design is based only upon parameters shown, and is for an individual building component, not a truss system. Before use, the building designer must verify the applicability of design parameters and properly incorporate this design into the overall building design. Bracing indicated is to prevent buckling of individual truss web and/or chord members only. Additional temporary and permanent bracing is always required for stability and to prevent collapse with possible personal injury and property damage. For general guidance regarding the fabrication, storage, delivery, erection and bracing of trusses and truss systems, see **ANSI/TPI1 Quality Criteria and DSB-22** available from Truss Plate Institute (www.tpinst.org) and **BCSI Building Component Safety Information** available from the Structural Building Component Association (www.sbcacomponents.com)

ENGINEERING BY TRENCO A MiTek Affiliate
818 Soundside Road
Edenton, NC 27932

14) This truss is designed in accordance with the 2018 International Residential Code sections R502.11.1 and R802.10.2 and referenced standard ANSI/TPI 1.
15) In the LOAD CASE(S) section, loads applied to the face of the truss are noted as front (F) or back (B).

LOAD CASE(S) Standard

1) Dead + Snow (balanced): Lumber Increase=1.15, Plate Increase=1.15
   Uniform Loads (lb/ft)
   Vert: 1-10=-35, 10-16=-35
   Trapezoidal Loads (lb/ft)
   Vert: 30=-20-to-32=-20 (F=0), 32=-20 (F=0)-to-29=-22 (F=-2), 29=-22 (F=-2)-to-28=-23 (F=-3), 28=-23 (F=-3)-to-27=-25 (F=-5), 27=-25 (F=-5)-to-26=-26 (F=-6), 26=-26 (F=-6)-to-25=-27 (F=-7), 25=-27 (F=-7)-to-24=-28 (F=-8), 24=-28 (F=-8)-to-23=-29 (F=-9), 23=-29 (F=-9)-to-22=-30 (F=-10), 22=-30 (F=-10)-to-21=-31 (F=-11), 21=-31 (F=-11)-to-20=-32 (F=-12), 20=-32 (F=-12)-to-19=-33 (F=-13), 19=-33 (F=-13)-to-18=-34 (F=-14), 18=-34 (F=-14)-to-17=-35 (F=-15)

NORTH CAROLINA PROFESSIONAL SEAL 036322 ENGINEER ERIC A. GILBERT

July 17,2025

WARNING - Verify design parameters and READ NOTES ON THIS AND INCLUDED MITEK REFERENCE PAGE MII-7473 rev. 1/2/2023 BEFORE USE.
Design valid for use only with MiTek® connectors. This design is based only upon parameters shown, and is for an individual building component, not a truss system. Before use, the building designer must verify the applicability of design parameters and properly incorporate this design into the overall building design. Bracing indicated is to prevent buckling of individual truss web and/or chord members only. Additional temporary and permanent bracing is always required for stability and to prevent collapse with possible personal injury and property damage. For general guidance regarding the fabrication, storage, delivery, erection and bracing of trusses and truss systems, see **ANSI/TPI1 Quality Criteria and DSB-22** available from Truss Plate Institute (www.tpinst.org) and **BCSI Building Component Safety Information** available from the Structural Building Component Association (www.sbcacomponents.com)

ENGINEERING BY TRENCO A MiTek Affiliate
818 Soundside Road
Edenton, NC 27932

Job	Truss	Truss Type	Qty	Ply	914 Serenity
P05928-31416	B02	Common	3	1	I74944959 Job Reference (optional)

84 Lumber-2383 (Dunn, NC), Dunn, NC - 28334, Run: 8.83 S Jun 11 2025 Print: 8.830 S Jun 11 2025 MiTek Industries, Inc. Wed Jul 16 10:26:34 Page: 1
ID:XulmTdh1nU6AV9oob1vjtFzxXRX-RfC?PsB70Hq3NSgPqnL8w3uITXbGKWrCDoi7J4zJC?f

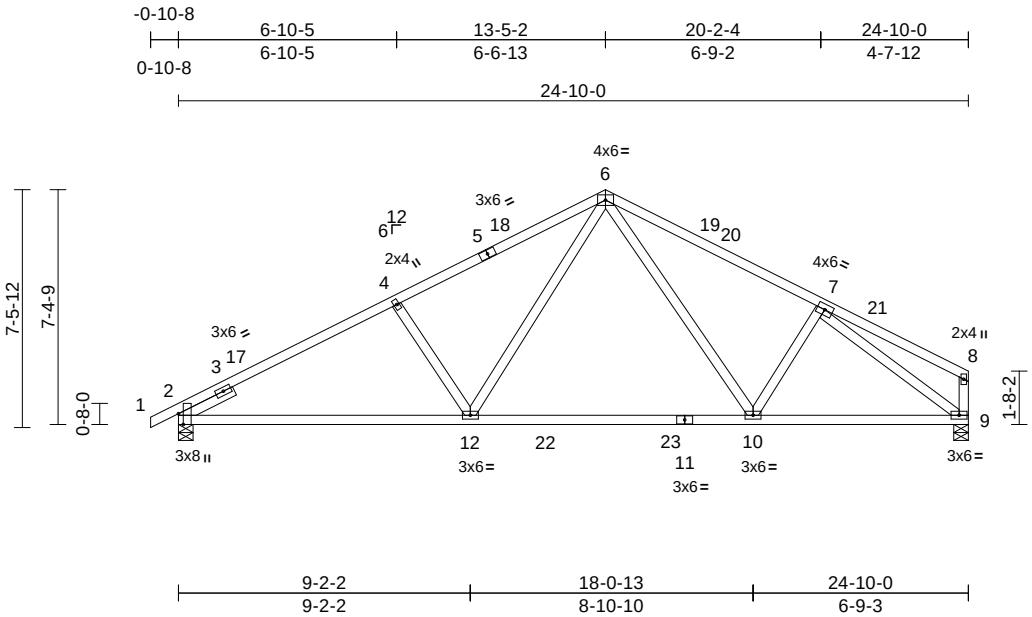

Scale = 1:72.4

Plate Offsets (X, Y): [2:0-4-1,Edge]

Loading	(psf)	Spacing	2-0-0	CSI		DEFL	in	(loc)	l/defl	L/d	PLATES	GRIP
TCLL (roof)	20.0	Plate Grip DOL	1.15	TC	0.60	Vert(LL)	-0.24	10-12	>999	240	MT20	244/190
Snow (Pf/Pg)	7.7/10.0	Lumber DOL	1.15	BC	0.91	Vert(CT)	-0.37	10-12	>793	180		
TCDL	10.0	Rep Stress Incr	YES	WB	0.78	Horz(CT)	0.05	9	n/a	n/a		
BCLL	0.0*	Code	IRC2018/TPI2014	Matrix-MS								
BCDL	10.0										Weight: 129 lb	FT = 20%

LUMBER

TOP CHORD	2x4 SP No.2
BOT CHORD	2x4 SP No.2
WEBS	2x4 SP No.2
SLIDER	Left 2x4 SP No.2 -- 1-11-0

BRACING

TOP CHORD	Structural wood sheathing directly applied or 3-11-13 oc purlins, except end verticals.
BOT CHORD	Rigid ceiling directly applied or 10-0-0 oc bracing.

REACTIONS (size) 2=0-5-8, 9=0-5-8
Max Horiz 2=96 (LC 15)
Max Uplift 2=-99 (LC 16), 9=-76 (LC 17)
Max Grav 2=1120 (LC 3), 9=1081 (LC 3)

FORCES (lb) - Maximum Compression/Maximum Tension

TOP CHORD	1-2=0/23, 2-4=-1685/191, 4-6=-1536/215, 6-7=-1357/198, 7-8=-102/55, 8-9=-113/33
BOT CHORD	2-12=-167/1463, 10-12=-71/943, 9-10=-127/1127
WEBS	4-12=-374/154, 6-12=-92/716, 6-10=-66/408, 7-10=-120/139, 7-9=-1396/145

NOTES

1) Unbalanced roof live loads have been considered for this design.
2) Wind: ASCE 7-16; Vult=115mph (3-second gust) Vasd=91mph; TCDL=6.0psf; BCDL=3.0psf; h=25ft; Cat. II; Exp B; Enclosed; MWFRS (envelope) exterior zone and C-C Exterior(2E) -0-10-8 to 2-1-8, Interior (1) 2-1-8 to 13-5-2, Exterior(2R) 13-5-2 to 16-5-2, Interior (1) 16-5-2 to 24-8-4 zone; cantilever left and right exposed ; end vertical left and right exposed;C-C for members and forces & MWFRS for reactions shown; Lumber DOL=1.60 plate grip DOL=1.60
3) TCLL: ASCE 7-16; Pr=20.0 psf (roof LL: Lum DOL=1.15 Plate DOL=1.15); Pg=10.0 psf; Pf=7.7 psf (Lum DOL = 1.15 Plate DOL = 1.15); Is=1.0; Rough Cat B; Partially Exp.; Ce=1.0; Cs=1.00; Ct=1.10
4) Unbalanced snow loads have been considered for this design.
5) This truss has been designed for greater of min roof live load of 12.0 psf or 1.00 times flat roof load of 7.7 psf on overhangs non-concurrent with other live loads.
6) Building Designer/Project engineer responsible for verifying Rain Load = 5.0 (psf) covers rain loading requirements specific to the use of this truss component.
7) This truss has been designed for a 10.0 psf bottom chord live load nonconcurrent with any other live loads.
8) * This truss has been designed for a live load of 20.0psf on the bottom chord in all areas where a rectangle 3-06-00 tall by 2-00-00 wide will fit between the bottom chord and any other members, with BCDL = 10.0psf.
9) Provide mechanical connection (by others) of truss to bearing plate capable of withstanding 99 lb uplift at joint 2 and 76 lb uplift at joint 9.
10) This truss is designed in accordance with the 2018 International Residential Code sections R502.11.1 and R802.10.2 and referenced standard ANSI/TPI 1.

LOAD CASE(S) Standard

July 17,2025

WARNING - Verify design parameters and READ NOTES ON THIS AND INCLUDED MITEK REFERENCE PAGE MII-7473 rev. 1/2/2023 BEFORE USE.
Design valid for use only with MiTek® connectors. This design is based only upon parameters shown, and is for an individual building component, not a truss system. Before use, the building designer must verify the applicability of design parameters and properly incorporate this design into the overall building design. Bracing indicated is to prevent buckling of individual truss web and/or chord members only. Additional temporary and permanent bracing is always required for stability and to prevent collapse with possible personal injury and property damage. For general guidance regarding the fabrication, storage, delivery, erection and bracing of trusses and truss systems, see **ANSI/TPI1 Quality Criteria and DSB-22** available from Truss Plate Institute (www.tpinst.org) and **BCSI Building Component Safety Information** available from the Structural Building Component Association (www.sbcacomponents.com)

ENGINEERING BY TRENCO A MiTek Affiliate
818 Soundside Road
Edenton, NC 27932

Job	Truss	Truss Type	Qty	Ply	914 Serenity
P05928-31416	B03	Roof Special	6	1	I74944960 Job Reference (optional)

84 Lumber-2383 (Dunn, NC), Dunn, NC - 28334,

Run: 8.83 S Jun 11 2025 Print: 8.830 S Jun 11 2025 MiTek Industries, Inc. Wed Jul 16 10:26:34

ID:XulmTdh1nU6AV9oob1vjtFzxXRX-RfC?PsB70Hq3NSgPqnL8w3uITXbGKWrCDoi7J4zJC?f

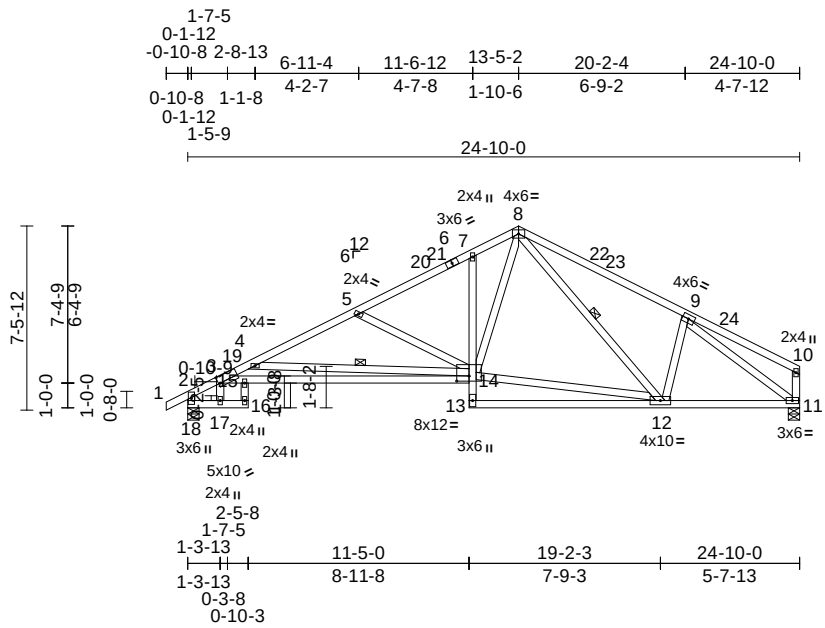

Scale = 1:93.5

Plate Offsets (X, Y): [3:0-0-12,0-3-4], [14:0-6-0,0-2-8]

Loading	(psf)	Spacing	2-0-0	CSI		DEFL	in	(loc)	l/defl	L/d	PLATES	GRIP
TCLL (roof)	20.0	Plate Grip DOL	1.15	TC	0.83	Vert(LL)	-0.37	14-15	>802	240	MT20	244/190
Snow (Pf/Pg)	7.7/10.0	Lumber DOL	1.15	BC	0.99	Vert(CT)	-0.87	14-15	>337	180		
TCDL	10.0	Rep Stress Incr	YES	WB	0.72	Horz(CT)	0.25	11	n/a	n/a		
BCLL	0.0*	Code	IRC2018/TPI2014	Matrix-MS								
BCDL	10.0										Weight: 162 lb	FT = 20%

LUMBER

TOP CHORD 2x4 SP No.2 *Except* 1-6:2x4 SP DSS

BOT CHORD 2x4 SP No.2 *Except* 3-14:2x4 SP No.1

WEBS 2x4 SP No.2

BRACING

TOP CHORD Structural wood sheathing directly applied or 2-4-0 oc purlins, except end verticals.

BOT CHORD Rigid ceiling directly applied or 2-2-0 oc bracing.

WEBS 1 Row at midpt 4-14, 8-12

REACTIONS (size) 11=0-5-8, 18=0-5-8

Max Horiz 18=96 (LC 15)

Max Uplift 11=-76 (LC 17), 18=-100 (LC 16)

Max Grav 11=980 (LC 2), 18=1044 (LC 2)

FORCES (lb) - Maximum Compression/Maximum Tension

TOP CHORD 1-2=0/27, 2-3=-326/60, 3-4=-2906/302, 4-5=-1764/231, 5-7=-1422/193, 7-8=-1311/228, 8-9=-1242/218, 9-10=-82/58, 10-11=-106/34

BOT CHORD 17-18=-96/58, 16-17=-101/53, 15-16=-58/285, 3-15=-248/2858, 14-15=-325/2842, 13-14=0/143, 7-14=-141/72, 12-13=-40/0, 11-12=-122/1039

WEBS 4-14=-1272/141, 5-14=-428/140, 12-14=-72/977, 8-14=-118/749, 8-12=-101/210, 9-12=-113/127, 9-11=-1301/136, 3-17=-489/92, 2-18=-797/108

NOTES

1) Unbalanced roof live loads have been considered for this design.
2) Wind: ASCE 7-16; Vult=115mph (3-second gust) Vasd=91mph; TCDL=6.0psf; BCDL=3.0psf; h=25ft; Cat. II; Exp B; Enclosed; MWFRS (envelope) exterior zone and C-C Exterior(2E) -0-10-8 to 2-1-8, Interior (1) 2-1-8 to 13-5-2, Exterior(2R) 13-5-2 to 16-5-2, Interior (1) 16-5-2 to 24-8-4 zone; cantilever left and right exposed ; end vertical left and right exposed;C-C for members and forces & MWFRS for reactions shown; Lumber DOL=1.60 plate grip DOL=1.60
3) TCLL: ASCE 7-16; Pr=20.0 psf (roof LL: Lum DOL=1.15 Plate DOL=1.15); Pg=10.0 psf; Pf=7.7 psf (Lum DOL = 1.15 Plate DOL = 1.15); Is=1.0; Rough Cat B; Partially Exp.; Ce=1.0; Cs=1.00; Ct=1.10
4) Unbalanced snow loads have been considered for this design.
5) This truss has been designed for greater of min roof live load of 12.0 psf or 1.00 times flat roof load of 7.7 psf on overhangs non-concurrent with other live loads.
6) Building Designer/Project engineer responsible for verifying Rain Load = 5.0 (psf) covers rain loading requirements specific to the use of this truss component.
7) This truss has been designed for a 10.0 psf bottom chord live load nonconcurrent with any other live loads.
8) * This truss has been designed for a live load of 20.0psf on the bottom chord in all areas where a rectangle 3-06-00 tall by 2-00-00 wide will fit between the bottom chord and any other members.
9) Provide mechanical connection (by others) of truss to bearing plate capable of withstanding 100 lb uplift at joint 18 and 76 lb uplift at joint 11.
10) This truss is designed in accordance with the 2018 International Residential Code sections R502.11.1 and R802.10.2 and referenced standard ANSI/TPI 1.

LOAD CASE(S) Standard

July 17,2025

WARNING - Verify design parameters and READ NOTES ON THIS AND INCLUDED MITEK REFERENCE PAGE MII-7473 rev. 1/2/2023 BEFORE USE.
Design valid for use only with MiTek® connectors. This design is based only upon parameters shown, and is for an individual building component, not a truss system. Before use, the building designer must verify the applicability of design parameters and properly incorporate this design into the overall building design. Bracing indicated is to prevent buckling of individual truss web and/or chord members only. Additional temporary and permanent bracing is always required for stability and to prevent collapse with possible personal injury and property damage. For general guidance regarding the fabrication, storage, delivery, erection and bracing of trusses and truss systems, see **ANSI/TPI1 Quality Criteria and DSB-22** available from Truss Plate Institute (www.tpinst.org) and **BCSI Building Component Safety Information** available from the Structural Building Component Association (www.sbcacomponents.com)

ENGINEERING BY TRENCO A MiTek Affiliate
818 Soundside Road
Edenton, NC 27932

Job	Truss	Truss Type	Qty	Ply	914 Serenity
P05928-31416	B04G	Common Girder	1	**2**	I74944961 Job Reference (optional)

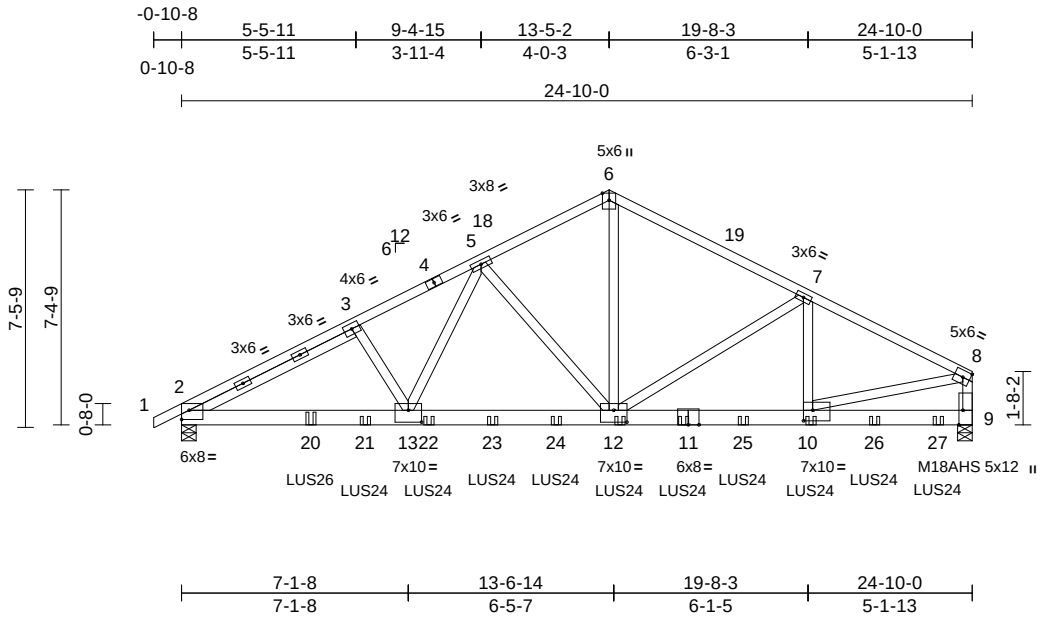

Scale = 1:72.4

Plate Offsets (X, Y): [2:Edge,0-3-8], [9:0-5-8,Edge], [10:0-3-8,0-4-0], [12:0-5-0,0-4-8], [13:0-5-0,0-4-8]

Loading	(psf)	Spacing	2-0-0	CSI		DEFL	in	(loc)	l/defl	L/d	PLATES	GRIP
TCLL (roof)	20.0	Plate Grip DOL	1.15	TC	0.85	Vert(LL)	-0.15	12-13	>999	240	MT20	244/190
Snow (Pf/Pg)	7.7/10.0	Lumber DOL	1.15	BC	1.00	Vert(CT)	-0.29	12-13	>999	180	M18AHS	186/179
TCDL	10.0	Rep Stress Incr	NO	WB	0.76	Horz(CT)	0.06	9	n/a	n/a		
BCLL	0.0*	Code	IRC2018/TPI2014	Matrix-MS								
BCDL	10.0										Weight: 330 lb	FT = 20%

LUMBER

TOP CHORD 2x4 SP No.2
BOT CHORD 2x6 SP DSS *Except* 11-9:2x6 SP No.2
WEBS 2x4 SP No.2
SLIDER Left 2x4 SP No.2 -- 5-8-14

BRACING

TOP CHORD Structural wood sheathing directly applied, except end verticals.
BOT CHORD Rigid ceiling directly applied or 10-0-0 oc bracing.

REACTIONS (size) 2=0-5-8, 9=0-5-8
Max Horiz 2=111 (LC 38)
Max Uplift 2=-627 (LC 12), 9=-426 (LC 13)
Max Grav 2=5096 (LC 2), 9=5885 (LC 2)

FORCES (lb) - Maximum Compression/Maximum Tension
TOP CHORD 1-2=0/29, 2-3=-5397/702, 3-5=-8623/1061, 5-6=-5853/636, 6-7=-6006/651, 7-8=-7138/601, 8-9=-4926/423
BOT CHORD 2-13=-968/7677, 12-13=-740/6502, 10-12=-494/6327, 9-10=-23/384
WEBS 8-10=-489/6181, 6-12=-517/4928, 7-12=-1350/80, 7-10=0/1038, 3-13=-63/174, 5-13=-465/2842, 5-12=-2066/390

NOTES

1) 2-ply truss to be connected together with 10d (0.131"x3") nails as follows:
Top chords connected as follows: 2x4 - 1 row at 0-9-0 oc.
Bottom chords connected as follows: 2x6 - 2 rows staggered at 0-9-0 oc.
Web connected as follows: 2x4 - 1 row at 0-9-0 oc.
2) All loads are considered equally applied to all plies, except if noted as front (F) or back (B) face in the LOAD CASE(S) section. Ply to ply connections have been provided to distribute only loads noted as (F) or (B), unless otherwise indicated.
3) Unbalanced roof live loads have been considered for this design.
4) Wind: ASCE 7-16; Vult=115mph (3-second gust) Vasd=91mph; TCDL=6.0psf; BCDL=3.0psf; h=25ft; Cat. II; Exp B; Enclosed; MWFRS (envelope) exterior zone; cantilever left and right exposed ; end vertical left exposed; Lumber DOL=1.60 plate grip DOL=1.60
5) TCLL: ASCE 7-16; Pr=20.0 psf (roof LL: Lum DOL=1.15 Plate DOL=1.15); Pg=10.0 psf; Pf=7.7 psf (Lum DOL = 1.15 Plate DOL = 1.15); Is=1.0; Rough Cat B; Partially Exp.; Ce=1.0; Cs=1.00; Ct=1.10
6) Unbalanced snow loads have been considered for this design.
7) This truss has been designed for greater of min roof live load of 12.0 psf or 1.00 times flat roof load of 7.7 psf on overhangs non-concurrent with other live loads.
8) Building Designer/Project engineer responsible for verifying Rain Load = 5.0 (psf) covers rain loading requirements specific to the use of this truss component.
9) All plates are MT20 plates unless otherwise indicated.
10) This truss has been designed for a 10.0 psf bottom chord live load nonconcurrent with any other live loads.
11) * This truss has been designed for a live load of 20.0psf on the bottom chord in all areas where a rectangle 3-06-00 tall by 2-00-00 wide will fit between the bottom chord and any other members.
12) Provide mechanical connection (by others) of truss to bearing plate capable of withstanding 627 lb uplift at joint 2 and 426 lb uplift at joint 9.
13) This truss is designed in accordance with the 2018 International Residential Code sections R502.11.1 and R802.10.2 and referenced standard ANSI/TPI 1.
14) Use Simpson Strong-Tie LUS26 (4-SD9112 Girder, 4-SD9212 Truss, Single Ply Girder) or equivalent at 4-0-12 from the left end to connect truss(es) to back face of bottom chord.
15) Use Simpson Strong-Tie LUS24 (4-10d Girder, 2-10d Truss) or equivalent spaced at 6-0-0 oc max. starting at 5-9-4 from the left end to 15-9-4 to connect truss(es) to back face of bottom chord.
16) Use Simpson Strong-Tie LUS24 (4-SD9112 Girder, 2-SD9212 Truss, Single Ply Girder) or equivalent spaced at 5-10-8 oc max. starting at 9-9-4 from the left end to 23-9-4 to connect truss(es) to back face of bottom chord.
17) Fill all nail holes where hanger is in contact with lumber.

LOAD CASE(S) Standard

1) Dead + Snow (balanced): Lumber Increase=1.15, Plate Increase=1.15
Uniform Loads (lb/ft)
Vert: 1-6=-35, 6-8=-35, 9-14=-20
Concentrated Loads (lb)
Vert: 11=-529 (B), 10=-603 (B), 12=-529 (B), 20=-949 (B), 21=-619 (B), 22=-615 (B), 23=-606 (B), 24=-600 (B), 25=-562 (B), 26=-570 (B), 27=-571 (B)

July 17,2025

WARNING - Verify design parameters and READ NOTES ON THIS AND INCLUDED MITEK REFERENCE PAGE MII-7473 rev. 1/2/2023 BEFORE USE.
Design valid for use only with MiTek® connectors. This design is based only upon parameters shown, and is for an individual building component, not a truss system. Before use, the building designer must verify the applicability of design parameters and properly incorporate this design into the overall building design. Bracing indicated is to prevent buckling of individual truss web and/or chord members only. Additional temporary and permanent bracing is always required for stability and to prevent collapse with possible personal injury and property damage. For general guidance regarding the fabrication, storage, delivery, erection and bracing of trusses and truss systems, see **ANSI/TPI1 Quality Criteria and DSB-22** available from Truss Plate Institute (www.tpinst.org) and **BCSI Building Component Safety Information** available from the Structural Building Component Association (www.sbcacomponents.com)

ENGINEERING BY TRENCO A MiTek Affiliate
818 Soundside Road
Edenton, NC 27932

Job	Truss	Truss Type	Qty	Ply	914 Serenity
P05928-31416	C01E	Common Structural Gable	1	1	I74944962 Job Reference (optional)

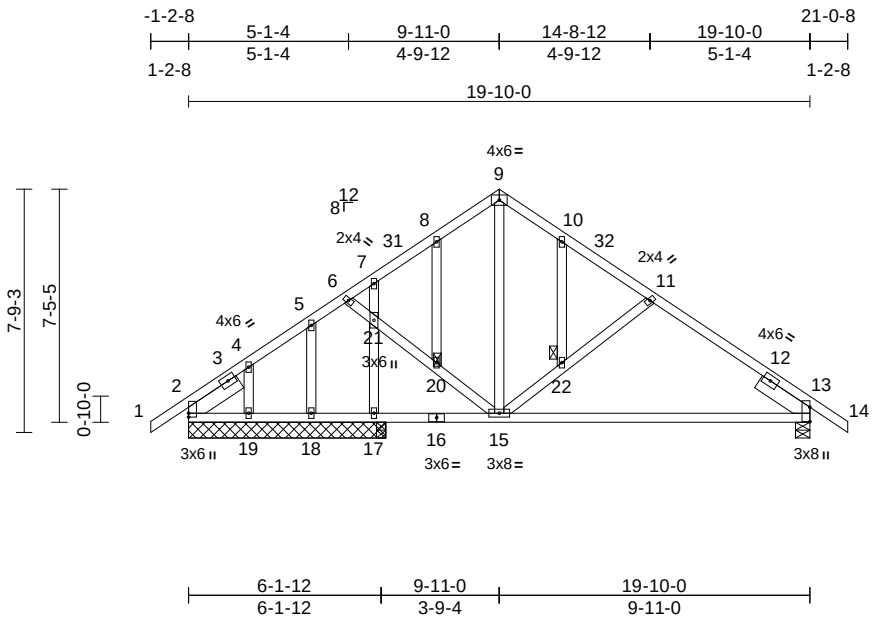

Scale = 1:73.6

Plate Offsets (X, Y): [2:Edge,0-0-0], [13:Edge,0-0-0]

Loading	(psf)	Spacing	2-0-0	CSI		DEFL	in	(loc)	l/defl	L/d	PLATES	GRIP
TCLL (roof)	20.0	Plate Grip DOL	1.15	TC	0.32	Vert(LL)	-0.16	15-29	>999	240	MT20	244/190
Snow (Pf/Pg)	7.7/10.0	Lumber DOL	1.15	BC	0.65	Vert(CT)	-0.32	15-29	>529	180		
TCDL	10.0	Rep Stress Incr	YES	WB	0.19	Horz(CT)	-0.01	13	n/a	n/a		
BCLL	0.0*	Code	IRC2018/TPI2014	Matrix-MS								
BCDL	10.0										Weight: 131 lb	FT = 20%

LUMBER

TOP CHORD	2x4 SP No.2
BOT CHORD	2x4 SP No.2
WEBS	2x4 SP No.2
OTHERS	2x4 SP No.2
SLIDER	Left 2x6 SP No.2 -- 1-11-0, Right 2x6 SP No.2 -- 1-11-0

BRACING

TOP CHORD	Structural wood sheathing directly applied or 5-11-0 oc purlins.
BOT CHORD	Rigid ceiling directly applied or 10-0-0 oc bracing.
JOINTS	1 Brace at Jt(s): 20, 22

REACTIONS (size) 2=6-3-8, 13=0-5-8, 17=6-3-8, 18=6-3-8, 19=6-3-8
Max Horiz 2=136 (LC 13)
Max Uplift 2=-24 (LC 10), 13=-70 (LC 15), 17=-86 (LC 14), 18=-1 (LC 14), 19=-92 (LC 14)
Max Grav 2=269 (LC 27), 13=674 (LC 2), 17=417 (LC 2), 18=299 (LC 2), 19=118 (LC 26)

FORCES (lb) - Maximum Compression/Maximum Tension

TOP CHORD	1-2=0/40, 2-4=-207/71, 4-5=-179/61, 5-6=-246/65, 6-7=-311/67, 7-8=-423/91, 8-9=-373/108, 9-10=-364/93, 10-11=-445/65, 11-13=-806/93, 13-14=0/40
BOT CHORD	2-19=-3/148, 18-19=-3/148, 17-18=-3/148, 15-17=-3/148, 13-15=-53/519
WEBS	9-15=-57/319, 15-22=-302/137, 11-22=-276/123, 6-21=0/231, 20-21=0/281, 15-20=0/257, 8-20=-53/27, 7-21=-311/61, 17-21=-393/90, 5-18=-250/22, 4-19=-80/92, 10-22=-45/23

NOTES

1) Unbalanced roof live loads have been considered for this design.
2) Wind: ASCE 7-16; Vult=115mph (3-second gust) Vasd=91mph; TCDL=6.0psf; BCDL=3.0psf; h=25ft; Cat. II; Exp B; Enclosed; MWFRS (envelope) exterior zone and C-C Exterior(2E) -1-2-8 to 1-11-0, Interior (1) 1-11-0 to 9-11-0, Exterior(2R) 9-11-0 to 12-11-0, Interior (1) 12-11-0 to 21-0-8 zone; cantilever left and right exposed ; end vertical left and right exposed;C-C for members and forces & MWFRS for reactions shown; Lumber DOL=1.60 plate grip DOL=1.60
3) Truss designed for wind loads in the plane of the truss only. For studs exposed to wind (normal to the face), see Standard Industry Gable End Details as applicable, or consult qualified building designer as per ANSI/TPI 1.
4) TCLL: ASCE 7-16; Pr=20.0 psf (roof LL: Lum DOL=1.15 Plate DOL=1.15); Pg=10.0 psf; Pf=7.7 psf (Lum DOL = 1.15 Plate DOL = 1.15); Is=1.0; Rough Cat B; Partially Exp.; Ce=1.0; Cs=1.00; Ct=1.10
5) This truss has been designed for greater of min roof live load of 12.0 psf or 1.00 times flat roof load of 7.7 psf on overhangs non-concurrent with other live loads.
6) Building Designer/Project engineer responsible for verifying Rain Load = 5.0 (psf) covers rain loading requirements specific to the use of this truss component.
7) All plates are 2x4 (||) MT20 unless otherwise indicated.
8) Gable studs spaced at 2-0-0 oc.
9) This truss has been designed for a 10.0 psf bottom chord live load nonconcurrent with any other live loads.
10) * This truss has been designed for a live load of 20.0psf on the bottom chord in all areas where a rectangle 3-06-00 tall by 2-00-00 wide will fit between the bottom chord and any other members.
11) Provide mechanical connection (by others) of truss to bearing plate capable of withstanding 24 lb uplift at joint 2, 86 lb uplift at joint 17, 1 lb uplift at joint 18, 92 lb uplift at joint 19, 70 lb uplift at joint 13 and 24 lb uplift at joint 2.
12) This truss is designed in accordance with the 2018 International Residential Code sections R502.11.1 and R802.10.2 and referenced standard ANSI/TPI 1.

LOAD CASE(S) Standard

July 17,2025

WARNING - Verify design parameters and READ NOTES ON THIS AND INCLUDED MITEK REFERENCE PAGE MII-7473 rev. 1/2/2023 BEFORE USE.
Design valid for use only with MiTek® connectors. This design is based only upon parameters shown, and is for an individual building component, not a truss system. Before use, the building designer must verify the applicability of design parameters and properly incorporate this design into the overall building design. Bracing indicated is to prevent buckling of individual truss web and/or chord members only. Additional temporary and permanent bracing is always required for stability and to prevent collapse with possible personal injury and property damage. For general guidance regarding the fabrication, storage, delivery, erection and bracing of trusses and truss systems, see **ANSI/TPI1 Quality Criteria and DSB-22** available from Truss Plate Institute (www.tpinst.org) and **BCSI Building Component Safety Information** available from the Structural Building Component Association (www.sbcacomponents.com)

ENGINEERING BY TRENCO A MiTek Affiliate
818 Soundside Road
Edenton, NC 27932

Job	Truss	Truss Type	Qty	Ply	914 Serenity
P05928-31416	C02	Common	4	1	I74944963 Job Reference (optional)

84 Lumber-2383 (Dunn, NC), Dunn, NC - 28334, Run: 8.83 S Jun 11 2025 Print: 8.830 S Jun 11 2025 MiTek Industries, Inc. Wed Jul 16 10:26:35 Page: 1

ID:mdoALiogfFEu4Y_WdQZqk9zxXRO-RfC?PsB70Hq3NSgPqnL8w3uITXbGKWrCDoi7J4zJC?f

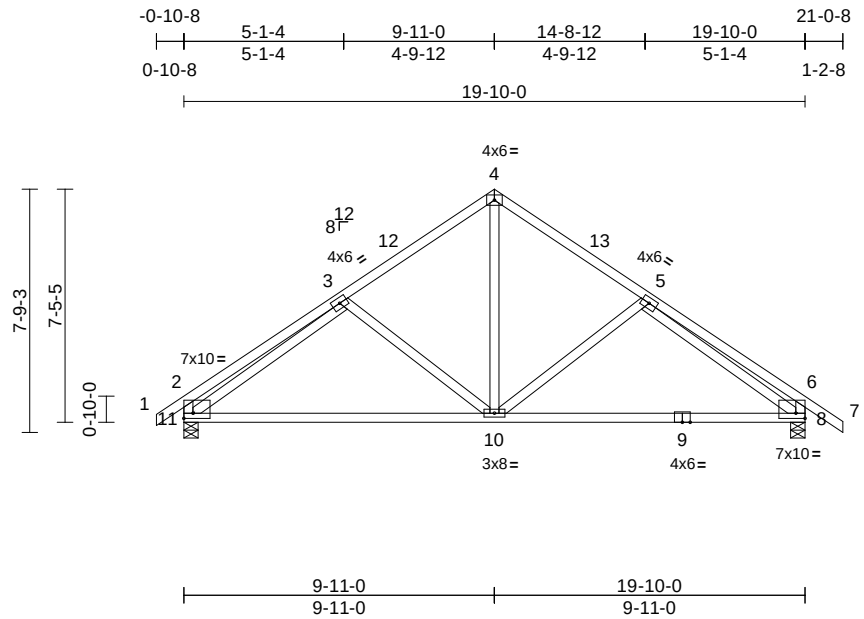

Scale = 1:73.6

Plate Offsets (X, Y): [2:Edge,0-2-0], [8:Edge,0-2-0]

Loading	(psf)	Spacing	2-0-0	CSI		DEFL	in	(loc)	l/defl	L/d	PLATES	GRIP
TCLL (roof)	20.0	Plate Grip DOL	1.15	TC	0.30	Vert(LL)	-0.18	10-11	>999	240	MT20	244/190
Snow (Pf/Pg)	7.7/10.0	Lumber DOL	1.15	BC	0.93	Vert(CT)	-0.36	10-11	>651	180		
TCDL	10.0	Rep Stress Incr	YES	WB	0.42	Horz(CT)	0.02	8	n/a	n/a		
BCLL	0.0*	Code	IRC2018/TPI2014	Matrix-MS								
BCDL	10.0										Weight: 116 lb	FT = 20%

LUMBER

TOP CHORD 2x4 SP No.2
BOT CHORD 2x4 SP No.2
WEBS 2x4 SP No.2

BRACING

TOP CHORD Structural wood sheathing directly applied or 6-0-0 oc purlins, except end verticals.
BOT CHORD Rigid ceiling directly applied or 2-2-0 oc bracing.

REACTIONS (size) 8=0-5-8, 11=0-5-8
Max Horiz 11=-151 (LC 12)
Max Uplift 8=-76 (LC 15), 11=-72 (LC 14)
Max Grav 8=864 (LC 2), 11=842 (LC 2)

FORCES (lb) - Maximum Compression/Maximum Tension
TOP CHORD 1-2=0/34, 2-3=-402/95, 3-4=-770/114, 4-5=-769/113, 5-6=-371/88, 6-7=0/45, 2-11=-383/93, 6-8=-387/93
BOT CHORD 10-11=-89/747, 8-10=-16/735
WEBS 4-10=-49/520, 5-10=-234/139, 3-10=-238/140, 3-11=-599/48, 5-8=-629/60

NOTES

1) Unbalanced roof live loads have been considered for this design.
2) Wind: ASCE 7-16; Vult=115mph (3-second gust) Vasd=91mph; TCDL=6.0psf; BCDL=3.0psf; h=25ft; Cat. II; Exp B; Enclosed; MWFRS (envelope) exterior zone and C-C Exterior(2E) -0-10-8 to 2-1-8, Interior (1) 2-1-8 to 9-11-0, Exterior(2R) 9-11-0 to 12-11-0, Interior (1) 12-11-0 to 21-0-8 zone; cantilever left and right exposed ; end vertical left and right exposed;C-C for members and forces & MWFRS for reactions shown; Lumber DOL=1.60 plate grip DOL=1.60
3) TCLL: ASCE 7-16; Pr=20.0 psf (roof LL: Lum DOL=1.15 Plate DOL=1.15); Pg=10.0 psf; Pf=7.7 psf (Lum DOL = 1.15 Plate DOL = 1.15); Is=1.0; Rough Cat B; Partially Exp.; Ce=1.0; Cs=1.00; Ct=1.10
4) This truss has been designed for greater of min roof live load of 12.0 psf or 1.00 times flat roof load of 7.7 psf on overhangs non-concurrent with other live loads.
5) Building Designer/Project engineer responsible for verifying Rain Load = 5.0 (psf) covers rain loading requirements specific to the use of this truss component.
6) This truss has been designed for a 10.0 psf bottom chord live load nonconcurrent with any other live loads.
7) * This truss has been designed for a live load of 20.0psf on the bottom chord in all areas where a rectangle 3-06-00 tall by 2-00-00 wide will fit between the bottom chord and any other members.
8) Provide mechanical connection (by others) of truss to bearing plate capable of withstanding 72 lb uplift at joint 11 and 76 lb uplift at joint 8.
9) This truss is designed in accordance with the 2018 International Residential Code sections R502.11.1 and R802.10.2 and referenced standard ANSI/TPI 1.

LOAD CASE(S) Standard

July 17,2025

WARNING - Verify design parameters and READ NOTES ON THIS AND INCLUDED MITEK REFERENCE PAGE MII-7473 rev. 1/2/2023 BEFORE USE.
Design valid for use only with MiTek® connectors. This design is based only upon parameters shown, and is for an individual building component, not a truss system. Before use, the building designer must verify the applicability of design parameters and properly incorporate this design into the overall building design. Bracing indicated is to prevent buckling of individual truss web and/or chord members only. Additional temporary and permanent bracing is always required for stability and to prevent collapse with possible personal injury and property damage. For general guidance regarding the fabrication, storage, delivery, erection and bracing of trusses and truss systems, see **ANSI/TPI1 Quality Criteria and DSB-22** available from Truss Plate Institute (www.tpinst.org) and **BCSI Building Component Safety Information** available from the Structural Building Component Association (www.sbcacomponents.com)

ENGINEERING BY TRENCO A MiTek Affiliate
818 Soundside Road
Edenton, NC 27932

Job	Truss	Truss Type	Qty	Ply	914 Serenity
P05928-31416	C03	Common	2	1	I74944964 Job Reference (optional)

84 Lumber-2383 (Dunn, NC), Dunn, NC - 28334,

Run: 8.83 S Jun 11 2025 Print: 8.830 S Jun 11 2025 MiTek Industries, Inc. Wed Jul 16 10:26:35 Page: 1
ID:bn9RclsRF5?1oTRg_hgE_QzxXRI-RfC?PsB70Hq3NSgPqnL8w3uITXbGKWrCDoi7J4zJC?f

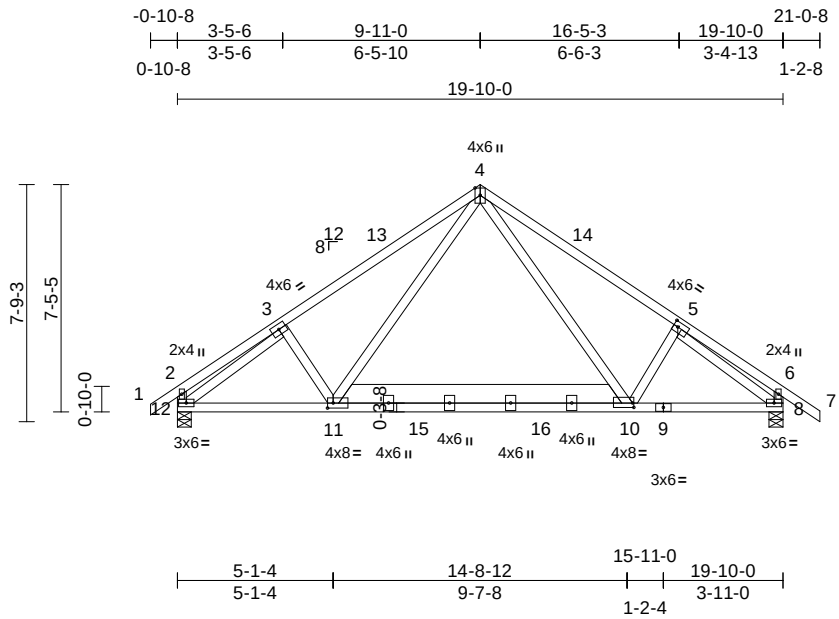

Scale = 1:75.5

Plate Offsets (X, Y): [5:0-1-12,0-2-0], [10:0-0-8,0-1-12], [11:0-2-4,0-2-0]

Loading	(psf)	Spacing	2-0-0	CSI		DEFL	in	(loc)	l/defl	L/d	PLATES	GRIP
TCLL (roof)	20.0	Plate Grip DOL	1.15	TC	0.59	Vert(LL)	-0.05	10-11	>999	240	MT20	244/190
Snow (Pf/Pg)	7.7/10.0	Lumber DOL	1.15	BC	0.44	Vert(CT)	-0.11	10-11	>999	180		
TCDL	10.0	Rep Stress Incr	YES	WB	0.35	Horz(CT)	0.02	8	n/a	n/a		
BCLL	0.0*	Code	IRC2018/TPI2014	Matrix-MS								
BCDL	10.0										Weight: 144 lb	FT = 20%

LUMBER
TOP CHORD 2x4 SP No.2
BOT CHORD 2x4 SP No.2 *Except* 11-10:2x8 SP DSS
WEBS 2x4 SP No.2

BRACING
TOP CHORD Structural wood sheathing directly applied or 4-2-13 oc purlins, except end verticals.
BOT CHORD Rigid ceiling directly applied or 10-0-0 oc bracing.

REACTIONS (size) 8=0-5-8, 12=0-5-8
Max Horiz 12=-151 (LC 12)
Max Uplift 8=-26 (LC 15), 12=-22 (LC 14)
Max Grav 8=1010 (LC 27), 12=990 (LC 26)

FORCES (lb) - Maximum Compression/Maximum Tension
TOP CHORD 1-2=0/34, 2-3=-151/28, 3-4=-1192/77, 4-5=-1194/79, 5-6=-130/58, 6-7=0/45, 2-12=-167/23, 6-8=-171/26
BOT CHORD 11-12=-64/1066, 10-11=0/653, 8-10=0/947
WEBS 4-11=-32/582, 3-11=-187/154, 3-12=-1149/31, 4-10=-35/577, 5-10=-182/153, 5-8=-1175/35

NOTES
1) Unbalanced roof live loads have been considered for this design.
2) Wind: ASCE 7-16; Vult=115mph (3-second gust) Vasd=91mph; TCDL=6.0psf; BCDL=3.0psf; h=25ft; Cat. II; Exp B; Enclosed; MWFRS (envelope) exterior zone and C-C Exterior(2E) -0-10-8 to 2-1-8, Interior (1) 2-1-8 to 9-11-0, Exterior(2R) 9-11-0 to 12-11-0, Interior (1) 12-11-0 to 21-0-8 zone; cantilever left and right exposed ; end vertical left and right exposed;C-C for members and forces & MWFRS for reactions shown; Lumber DOL=1.60 plate grip DOL=1.60
3) TCLL: ASCE 7-16; Pr=20.0 psf (roof LL: Lum DOL=1.15 Plate DOL=1.15); Pg=10.0 psf; Pf=7.7 psf (Lum DOL = 1.15 Plate DOL = 1.15); Is=1.0; Rough Cat B; Partially Exp.; Ce=1.0; Cs=1.00; Ct=1.10
4) This truss has been designed for greater of min roof live load of 12.0 psf or 1.00 times flat roof load of 7.7 psf on overhangs non-concurrent with other live loads.
5) Building Designer/Project engineer responsible for verifying Rain Load = 5.0 (psf) covers rain loading requirements specific to the use of this truss component.
6) 100.0lb AC unit load placed on the bottom chord, 9-11-0 from left end, supported at two points, 4-0-0 apart.
7) This truss has been designed for a 10.0 psf bottom chord live load nonconcurrent with any other live loads.
8) * This truss has been designed for a live load of 20.0psf on the bottom chord in all areas where a rectangle 3-06-00 tall by 2-00-00 wide will fit between the bottom chord and any other members, with BCDL = 10.0psf.
9) Provide mechanical connection (by others) of truss to bearing plate capable of withstanding 26 lb uplift at joint 8 and 22 lb uplift at joint 12.
10) This truss is designed in accordance with the 2018 International Residential Code sections R502.11.1 and R802.10.2 and referenced standard ANSI/TPI 1.

LOAD CASE(S) Standard

July 17,2025

WARNING - Verify design parameters and READ NOTES ON THIS AND INCLUDED MITEK REFERENCE PAGE MII-7473 rev. 1/2/2023 BEFORE USE.
Design valid for use only with MiTek® connectors. This design is based only upon parameters shown, and is for an individual building component, not a truss system. Before use, the building designer must verify the applicability of design parameters and properly incorporate this design into the overall building design. Bracing indicated is to prevent buckling of individual truss web and/or chord members only. Additional temporary and permanent bracing is always required for stability and to prevent collapse with possible personal injury and property damage. For general guidance regarding the fabrication, storage, delivery, erection and bracing of trusses and truss systems, see **ANSI/TPI1 Quality Criteria and DSB-22** available from Truss Plate Institute (www.tpinst.org) and **BCSI Building Component Safety Information** available from the Structural Building Component Association (www.sbcacomponents.com)

ENGINEERING BY TRENCO A MiTek Affiliate
818 Soundside Road
Edenton, NC 27932

Job	Truss	Truss Type	Qty	Ply	914 Serenity
P05928-31416	C04	Common	2	1	I74944965 Job Reference (optional)

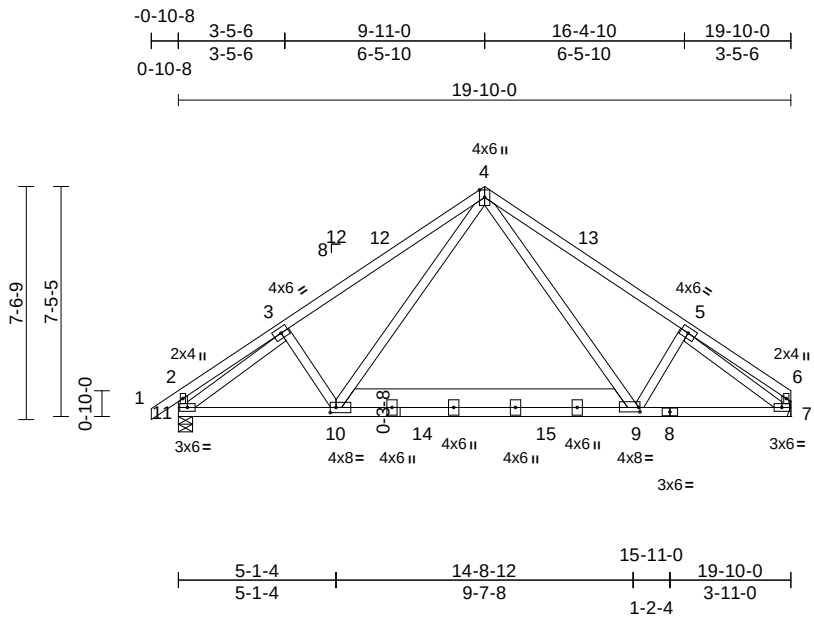

Scale = 1:74.6

Plate Offsets (X, Y): [9:0-0-8,0-1-12], [10:0-2-4,0-2-0]

Loading	(psf)	Spacing	2-0-0	CSI		DEFL	in	(loc)	l/defl	L/d	PLATES	GRIP
TCLL (roof)	20.0	Plate Grip DOL	1.15	TC	0.59	Vert(LL)	-0.05	9-10	>999	240	MT20	244/190
Snow (Pf/Pg)	7.7/10.0	Lumber DOL	1.15	BC	0.44	Vert(CT)	-0.11	9-10	>999	180		
TCDL	10.0	Rep Stress Incr	YES	WB	0.35	Horz(CT)	0.02	7	n/a	n/a		
BCLL	0.0*	Code	IRC2018/TPI2014	Matrix-MS								
BCDL	10.0										Weight: 142 lb	FT = 20%

LUMBER
TOP CHORD 2x4 SP No.2
BOT CHORD 2x4 SP No.2 *Except* 10-9:2x8 SP DSS
WEBS 2x4 SP No.2

BRACING
TOP CHORD Structural wood sheathing directly applied or 4-3-4 oc purlins, except end verticals.
BOT CHORD Rigid ceiling directly applied or 10-0-0 oc bracing.

REACTIONS (size) 7= Mechanical, 11=0-5-8
Max Horiz 11=144 (LC 13)
Max Uplift 7=-9 (LC 15), 11=-22 (LC 14)
Max Grav 7=933 (LC 27), 11=992 (LC 26)

FORCES (lb) - Maximum Compression/Maximum Tension
TOP CHORD 1-2=0/34, 2-3=-151/28, 3-4=-1195/77, 4-5=-1207/81, 5-6=-153/23, 6-7=-112/6, 2-11=-167/24
BOT CHORD 10-11=-74/1060, 9-10=0/647, 7-9=-10/968
WEBS 4-10=-32/581, 3-10=-187/154, 3-11=-1152/31, 4-9=-37/589, 5-9=-195/155, 5-7=-1147/24

NOTES
1) Unbalanced roof live loads have been considered for this design.
2) Wind: ASCE 7-16; Vult=115mph (3-second gust) Vasd=91mph; TCDL=6.0psf; BCDL=3.0psf; h=25ft; Cat. II; Exp B; Enclosed; MWFRS (envelope) exterior zone and C-C Exterior(2E) -0-10-8 to 2-1-8, Interior (1) 2-1-8 to 9-11-0, Exterior(2R) 9-11-0 to 12-11-0, Interior (1) 12-11-0 to 19-8-4 zone; cantilever left and right exposed ; end vertical left and right exposed;C-C for members and forces & MWFRS for reactions shown; Lumber DOL=1.60 plate grip DOL=1.60
3) TCLL: ASCE 7-16; Pr=20.0 psf (roof LL: Lum DOL=1.15 Plate DOL=1.15); Pg=10.0 psf; Pf=7.7 psf (Lum DOL = 1.15 Plate DOL = 1.15); Is=1.0; Rough Cat B; Partially Exp.; Ce=1.0; Cs=1.00; Ct=1.10
4) This truss has been designed for greater of min roof live load of 12.0 psf or 1.00 times flat roof load of 7.7 psf on overhangs non-concurrent with other live loads.
5) Building Designer/Project engineer responsible for verifying Rain Load = 5.0 (psf) covers rain loading requirements specific to the use of this truss component.
6) 100.0lb AC unit load placed on the bottom chord, 9-11-0 from left end, supported at two points, 4-0-0 apart.
7) This truss has been designed for a 10.0 psf bottom chord live load nonconcurrent with any other live loads.
8) * This truss has been designed for a live load of 20.0psf on the bottom chord in all areas where a rectangle 3-06-00 tall by 2-00-00 wide will fit between the bottom chord and any other members, with BCDL = 10.0psf.
9) Refer to girder(s) for truss to truss connections.
10) Provide mechanical connection (by others) of truss to bearing plate capable of withstanding 9 lb uplift at joint 7 and 22 lb uplift at joint 11.
11) This truss is designed in accordance with the 2018 International Residential Code sections R502.11.1 and R802.10.2 and referenced standard ANSI/TPI 1.

LOAD CASE(S) Standard

NORTH CAROLINA PROFESSIONAL SEAL 036322 ENGINEER ERIC A. GILBERT

July 17,2025

WARNING - Verify design parameters and READ NOTES ON THIS AND INCLUDED MITEK REFERENCE PAGE MII-7473 rev. 1/2/2023 BEFORE USE.
Design valid for use only with MiTek® connectors. This design is based only upon parameters shown, and is for an individual building component, not a truss system. Before use, the building designer must verify the applicability of design parameters and properly incorporate this design into the overall building design. Bracing indicated is to prevent buckling of individual truss web and/or chord members only. Additional temporary and permanent bracing is always required for stability and to prevent collapse with possible personal injury and property damage. For general guidance regarding the fabrication, storage, delivery, erection and bracing of trusses and truss systems, see **ANSI/TPI1 Quality Criteria and DSB-22** available from Truss Plate Institute (www.tpinst.org) and **BCSI Building Component Safety Information** available from the Structural Building Component Association (www.sbcacomponents.com)

ENGINEERING BY TRENCO A MiTek Affiliate
818 Soundside Road
Edenton, NC 27932

Job	Truss	Truss Type	Qty	Ply	914 Serenity
P05928-31416	C05	Common	1	1	I74944966 Job Reference (optional)

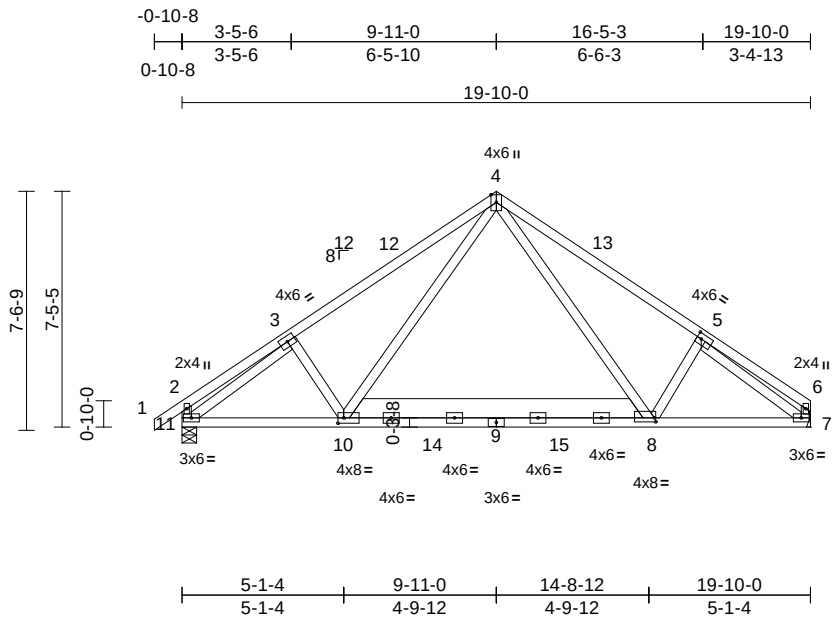

Scale = 1:72.7

Plate Offsets (X, Y): [5:0-1-12,0-2-0], [8:0-0-8,0-1-8], [10:0-2-4,0-2-0]

Loading	(psf)	Spacing	2-1-8	CSI		DEFL	in	(loc)	l/defl	L/d	PLATES	GRIP
TCLL (roof)	20.0	Plate Grip DOL	1.15	TC	0.79	Vert(LL)	-0.06	8-10	>999	240	MT20	244/190
Snow (Pf/Pg)	7.7/10.0	Lumber DOL	1.15	BC	0.53	Vert(CT)	-0.13	8-10	>999	180		
TCDL	10.0	Rep Stress Incr	NO	WB	0.37	Horz(CT)	0.02	7	n/a	n/a		
BCLL	0.0*	Code	IRC2018/TPI2014	Matrix-MS								
BCDL	10.0										Weight: 142 lb	FT = 20%

LUMBER
TOP CHORD 2x4 SP No.2
BOT CHORD 2x4 SP No.2 *Except* 10-8:2x8 SP DSS
WEBS 2x4 SP No.2

BRACING
TOP CHORD Structural wood sheathing directly applied or 3-11-6 oc purlins, except end verticals.
BOT CHORD Rigid ceiling directly applied or 10-0-0 oc bracing.

REACTIONS (size) 7= Mechanical, 11=0-5-8
Max Horiz 11=153 (LC 13)
Max Uplift 7=-12 (LC 15), 11=-26 (LC 14)
Max Grav 7=989 (LC 27), 11=1051 (LC 26)

FORCES (lb) - Maximum Compression/Maximum Tension
TOP CHORD 1-2=0/36, 2-3=-158/32, 3-4=-1267/86, 4-5=-1279/90, 5-6=-160/25, 2-11=-176/25, 6-7=-119/7
BOT CHORD 10-11=-83/1124, 8-10=0/686, 7-8=-14/1025
WEBS 4-10=-37/616, 3-10=-199/163, 3-11=-1223/37, 4-8=-42/624, 5-8=-207/164, 5-7=-1217/29

NOTES
1) Unbalanced roof live loads have been considered for this design.
2) Wind: ASCE 7-16; Vult=115mph (3-second gust) Vasd=91mph; TCDL=6.0psf; BCDL=3.0psf; h=25ft; Cat. II; Exp B; Enclosed; MWFRS (envelope) exterior zone and C-C Exterior(2E) -0-10-8 to 2-1-8, Interior (1) 2-1-8 to 9-11-0, Exterior(2R) 9-11-0 to 12-11-0, Interior (1) 12-11-0 to 19-8-4 zone; cantilever left and right exposed ; end vertical left and right exposed;C-C for members and forces & MWFRS for reactions shown; Lumber DOL=1.60 plate grip DOL=1.60
3) TCLL: ASCE 7-16; Pr=20.0 psf (roof LL: Lum DOL=1.15 Plate DOL=1.15); Pg=10.0 psf; Pf=7.7 psf (Lum DOL = 1.15 Plate DOL = 1.15); Is=1.0; Rough Cat B; Partially Exp.; Ce=1.0; Cs=1.00; Ct=1.10
4) This truss has been designed for greater of min roof live load of 12.0 psf or 1.00 times flat roof load of 7.7 psf on overhangs non-concurrent with other live loads.
5) Building Designer/Project engineer responsible for verifying Rain Load = 5.0 (psf) covers rain loading requirements specific to the use of this truss component.
6) 100.0lb AC unit load placed on the bottom chord, 9-11-0 from left end, supported at two points, 4-0-0 apart.
7) This truss has been designed for a 10.0 psf bottom chord live load nonconcurrent with any other live loads.
8) * This truss has been designed for a live load of 20.0psf on the bottom chord in all areas where a rectangle 3-06-00 tall by 2-00-00 wide will fit between the bottom chord and any other members, with BCDL = 10.0psf.
9) Refer to girder(s) for truss to truss connections.
10) Provide mechanical connection (by others) of truss to bearing plate capable of withstanding 26 lb uplift at joint 11 and 12 lb uplift at joint 7.
11) This truss is designed in accordance with the 2018 International Residential Code sections R502.11.1 and R802.10.2 and referenced standard ANSI/TPI 1.

LOAD CASE(S) Standard

July 17,2025

WARNING - Verify design parameters and READ NOTES ON THIS AND INCLUDED MITEK REFERENCE PAGE MII-7473 rev. 1/2/2023 BEFORE USE.
Design valid for use only with MiTek® connectors. This design is based only upon parameters shown, and is for an individual building component, not a truss system. Before use, the building designer must verify the applicability of design parameters and properly incorporate this design into the overall building design. Bracing indicated is to prevent buckling of individual truss web and/or chord members only. Additional temporary and permanent bracing is always required for stability and to prevent collapse with possible personal injury and property damage. For general guidance regarding the fabrication, storage, delivery, erection and bracing of trusses and truss systems, see **ANSI/TPI1 Quality Criteria and DSB-22** available from Truss Plate Institute (www.tpinst.org) and **BCSI Building Component Safety Information** available from the Structural Building Component Association (www.sbcacomponents.com)

ENGINEERING BY TRENCO A MiTek Affiliate
818 Soundside Road
Edenton, NC 27932

Job	Truss	Truss Type	Qty	Ply	914 Serenity
P05928-31416	C06	Common	1	1	I74944967 Job Reference (optional)

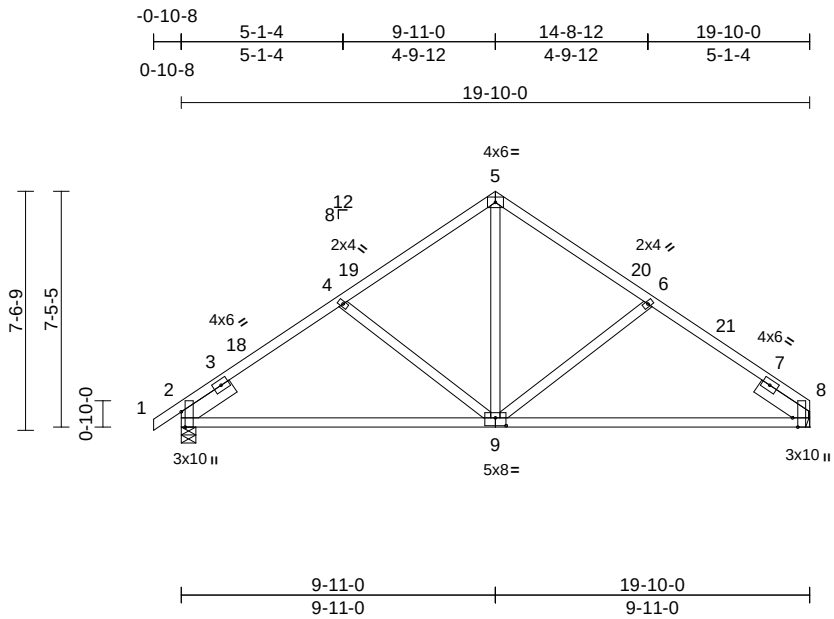

Scale = 1:72.7

Plate Offsets (X, Y): [2:0-5-13,Edge], [8:0-3-8,Edge], [9:0-4-0,0-3-0]

Loading	(psf)	Spacing	2-1-8	CSI		DEFL	in	(loc)	l/defl	L/d	PLATES	GRIP
TCLL (roof)	20.0	Plate Grip DOL	1.15	TC	0.35	Vert(LL)	-0.13	9-12	>999	240	MT20	244/190
Snow (Pf/Pg)	7.7/10.0	Lumber DOL	1.15	BC	0.91	Vert(CT)	-0.26	9-12	>914	180		
TCDL	10.0	Rep Stress Incr	NO	WB	0.19	Horz(CT)	0.02	8	n/a	n/a		
BCLL	0.0*	Code	IRC2018/TPI2014	Matrix-MS								
BCDL	10.0										Weight: 104 lb	FT = 20%

LUMBER

TOP CHORD	2x4 SP No.2
BOT CHORD	2x4 SP No.2
WEBS	2x4 SP No.2
SLIDER	Left 2x6 SP No.2 -- 1-11-0, Right 2x6 SP No.2 -- 1-11-0

BRACING

TOP CHORD	Structural wood sheathing directly applied or 5-7-7 oc purlins.
BOT CHORD	Rigid ceiling directly applied or 10-0-0 oc bracing.

REACTIONS (size) 2=0-5-8, 8= Mechanical
Max Horiz 2=137 (LC 13)
Max Uplift 2=-75 (LC 14), 8=-63 (LC 15)
Max Grav 2=900 (LC 2), 8=842 (LC 2)

FORCES (lb) - Maximum Compression/Maximum Tension

TOP CHORD	1-2=0/31, 2-4=-1046/110, 4-5=-833/120, 5-6=-834/119, 6-8=-1048/110
BOT CHORD	2-8=-150/827
WEBS	5-9=-52/570, 6-9=-287/143, 4-9=-283/142

NOTES

1) Unbalanced roof live loads have been considered for this design.
2) Wind: ASCE 7-16; Vult=115mph (3-second gust) Vasd=91mph; TCDL=6.0psf; BCDL=3.0psf; h=25ft; Cat. II; Exp B; Enclosed; MWFRS (envelope) exterior zone and C-C Exterior(2E) -0-10-8 to 2-1-8, Interior (1) 2-1-8 to 9-11-0, Exterior(2R) 9-11-0 to 14-1-15, Interior (1) 14-1-15 to 19-10-0 zone; cantilever left and right exposed ; end vertical left and right exposed;C-C for members and forces & MWFRS for reactions shown; Lumber DOL=1.60 plate grip DOL=1.60
3) TCLL: ASCE 7-16; Pr=20.0 psf (roof LL: Lum DOL=1.15 Plate DOL=1.15); Pg=10.0 psf; Pf=7.7 psf (Lum DOL = 1.15 Plate DOL = 1.15); Is=1.0; Rough Cat B; Partially Exp.; Ce=1.0; Cs=1.00; Ct=1.10
4) This truss has been designed for greater of min roof live load of 12.0 psf or 1.00 times flat roof load of 7.7 psf on overhangs non-concurrent with other live loads.
5) Building Designer/Project engineer responsible for verifying Rain Load = 5.0 (psf) covers rain loading requirements specific to the use of this truss component.
6) This truss has been designed for a 10.0 psf bottom chord live load nonconcurrent with any other live loads.
7) * This truss has been designed for a live load of 20.0psf on the bottom chord in all areas where a rectangle 3-06-00 tall by 2-00-00 wide will fit between the bottom chord and any other members.
8) Refer to girder(s) for truss to truss connections.
9) Provide mechanical connection (by others) of truss to bearing plate capable of withstanding 63 lb uplift at joint 8 and 75 lb uplift at joint 2.
10) This truss is designed in accordance with the 2018 International Residential Code sections R502.11.1 and R802.10.2 and referenced standard ANSI/TPI 1.

LOAD CASE(S) Standard

July 17,2025

WARNING - Verify design parameters and READ NOTES ON THIS AND INCLUDED MITEK REFERENCE PAGE MII-7473 rev. 1/2/2023 BEFORE USE.
Design valid for use only with MiTek® connectors. This design is based only upon parameters shown, and is for an individual building component, not a truss system. Before use, the building designer must verify the applicability of design parameters and properly incorporate this design into the overall building design. Bracing indicated is to prevent buckling of individual truss web and/or chord members only. Additional temporary and permanent bracing is always required for stability and to prevent collapse with possible personal injury and property damage. For general guidance regarding the fabrication, storage, delivery, erection and bracing of trusses and truss systems, see **ANSI/TPI1 Quality Criteria and DSB-22** available from Truss Plate Institute (www.tpinst.org) and **BCSI Building Component Safety Information** available from the Structural Building Component Association (www.sbcacomponents.com)

ENGINEERING BY TRENCO A MiTek Affiliate
818 Soundside Road
Edenton, NC 27932

Job	Truss	Truss Type	Qty	Ply	914 Serenity
P05928-31416	C07	Common	2	1	I74944968 Job Reference (optional)

84 Lumber-2383 (Dunn, NC), Dunn, NC - 28334, Run: 8.83 S Jun 11 2025 Print: 8.830 S Jun 11 2025 MiTek Industries, Inc. Wed Jul 16 10:26:37 Page: 1
ID:BT?kYY1DyOl2TcWModwWYNzxXR4-RfC?PsB70Hq3NSgPqnL8w3uITXbGKWrCDoi7J4zJC?f

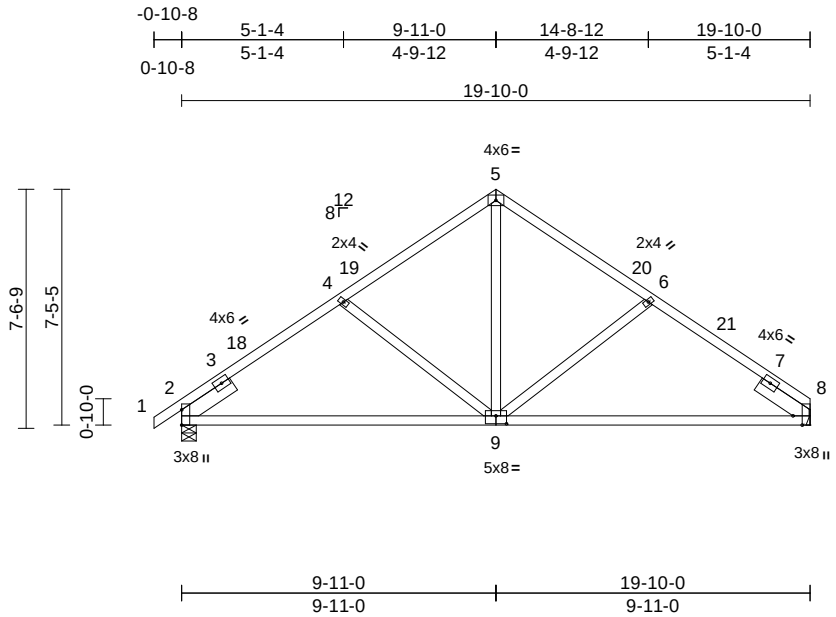

Scale = 1:72.7

Plate Offsets (X, Y): [2:Edge,0-0-0], [8:0-3-8,Edge], [9:0-4-0,0-3-0]

Loading	(psf)	Spacing	2-0-0	CSI		DEFL	in	(loc)	l/defl	L/d	PLATES	GRIP
TCLL (roof)	20.0	Plate Grip DOL	1.15	TC	0.28	Vert(LL)	-0.12	9-12	>999	240	MT20	244/190
Snow (Pf/Pg)	7.7/10.0	Lumber DOL	1.15	BC	0.78	Vert(CT)	-0.24	9-12	>972	180		
TCDL	10.0	Rep Stress Incr	YES	WB	0.18	Horz(CT)	0.02	8	n/a	n/a		
BCLL	0.0*	Code	IRC2018/TPI2014	Matrix-MS								
BCDL	10.0										Weight: 104 lb	FT = 20%

LUMBER

TOP CHORD	2x4 SP No.2
BOT CHORD	2x4 SP No.2
WEBS	2x4 SP No.2
SLIDER	Left 2x6 SP No.2 -- 1-11-0, Right 2x6 SP No.2 -- 1-11-0

BRACING

TOP CHORD	Structural wood sheathing directly applied or 5-9-11 oc purlins.
BOT CHORD	Rigid ceiling directly applied or 10-0-0 oc bracing.

REACTIONS (size) 2=0-5-8, 8= Mechanical
Max Horiz 2=129 (LC 13)
Max Uplift 2=-71 (LC 14), 8=-60 (LC 15)
Max Grav 2=847 (LC 2), 8=792 (LC 2)

FORCES (lb) - Maximum Compression/Maximum Tension

TOP CHORD	1-2=0/29, 2-4=-984/103, 4-5=-784/113, 5-6=-785/112, 6-8=-986/104
BOT CHORD	2-8=-141/779
WEBS	5-9=-49/536, 6-9=-270/134, 4-9=-266/134

NOTES

1) Unbalanced roof live loads have been considered for this design.
2) Wind: ASCE 7-16; Vult=115mph (3-second gust) Vasd=91mph; TCDL=6.0psf; BCDL=3.0psf; h=25ft; Cat. II; Exp B; Enclosed; MWFRS (envelope) exterior zone and C-C Exterior(2E) -0-10-8 to 2-1-8, Interior (1) 2-1-8 to 9-11-0, Exterior(2R) 9-11-0 to 14-1-15, Interior (1) 14-1-15 to 19-10-0 zone; cantilever left and right exposed ; end vertical left and right exposed;C-C for members and forces & MWFRS for reactions shown; Lumber DOL=1.60 plate grip DOL=1.60
3) TCLL: ASCE 7-16; Pr=20.0 psf (roof LL: Lum DOL=1.15 Plate DOL=1.15); Pg=10.0 psf; Pf=7.7 psf (Lum DOL = 1.15 Plate DOL = 1.15); Is=1.0; Rough Cat B; Partially Exp.; Ce=1.0; Cs=1.00; Ct=1.10
4) This truss has been designed for greater of min roof live load of 12.0 psf or 1.00 times flat roof load of 7.7 psf on overhangs non-concurrent with other live loads.
5) Building Designer/Project engineer responsible for verifying Rain Load = 5.0 (psf) covers rain loading requirements specific to the use of this truss component.
6) This truss has been designed for a 10.0 psf bottom chord live load nonconcurrent with any other live loads.
7) * This truss has been designed for a live load of 20.0psf on the bottom chord in all areas where a rectangle 3-06-00 tall by 2-00-00 wide will fit between the bottom chord and any other members.
8) Refer to girder(s) for truss to truss connections.
9) Provide mechanical connection (by others) of truss to bearing plate capable of withstanding 60 lb uplift at joint 8 and 71 lb uplift at joint 2.
10) This truss is designed in accordance with the 2018 International Residential Code sections R502.11.1 and R802.10.2 and referenced standard ANSI/TPI 1.

LOAD CASE(S) Standard

July 17,2025

WARNING - Verify design parameters and READ NOTES ON THIS AND INCLUDED MITEK REFERENCE PAGE MII-7473 rev. 1/2/2023 BEFORE USE.
Design valid for use only with MiTek® connectors. This design is based only upon parameters shown, and is for an individual building component, not a truss system. Before use, the building designer must verify the applicability of design parameters and properly incorporate this design into the overall building design. Bracing indicated is to prevent buckling of individual truss web and/or chord members only. Additional temporary and permanent bracing is always required for stability and to prevent collapse with possible personal injury and property damage. For general guidance regarding the fabrication, storage, delivery, erection and bracing of trusses and truss systems, see **ANSI/TPI1 Quality Criteria and DSB-22** available from Truss Plate Institute (www.tpinst.org) and **BCSI Building Component Safety Information** available from the Structural Building Component Association (www.sbcacomponents.com)

ENGINEERING BY TRENCO A MiTek Affiliate
818 Soundside Road
Edenton, NC 27932

Job	Truss	Truss Type	Qty	Ply	914 Serenity
P05928-31416	C08	Half Hip	1	1	I74944969 Job Reference (optional)

84 Lumber-2383 (Dunn, NC), Dunn, NC - 28334, Run: 8.83 S Jun 11 2025 Print: 8.830 S Jun 11 2025 MiTek Industries, Inc. Wed Jul 16 10:26:37 Page: 1

ID:7s7UzE3TU00mjwglw2z_dozxXR2-RfC?PsB70Hq3NSgPqnL8w3uITXbGKWrCDoi7J4zJC?f

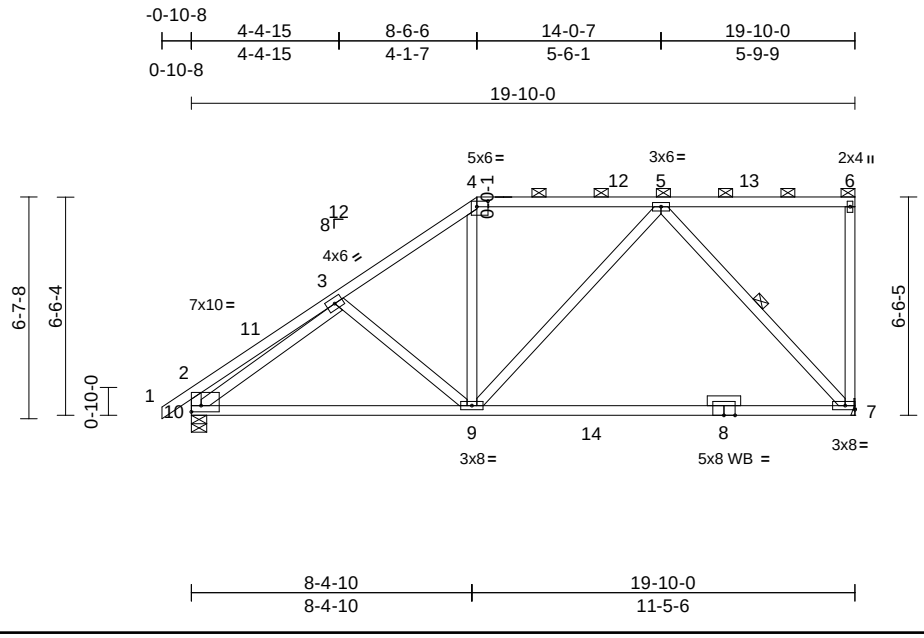

Scale = 1:68.9

Plate Offsets (X, Y): [2:Edge,0-2-4], [4:0-4-0,0-1-15]

Loading	(psf)	Spacing	2-0-0	CSI		DEFL	in	(loc)	l/defl	L/d	PLATES	GRIP
TCLL (roof)	20.0	Plate Grip DOL	1.15	TC	0.52	Vert(LL)	-0.55	7-9	>423	240	MT20	244/190
Snow (Pf/Pg)	12.7/10.0	Lumber DOL	1.15	BC	0.81	Vert(CT)	-0.89	7-9	>262	180		
TCDL	10.0	Rep Stress Incr	YES	WB	0.42	Horz(CT)	0.02	7	n/a	n/a		
BCLL	0.0*	Code	IRC2018/TPI2014	Matrix-MS								
BCDL	10.0										Weight: 122 lb	FT = 20%

LUMBER

TOP CHORD 2x4 SP No.2
BOT CHORD 2x4 SP DSS *Except* 8-7:2x4 SP No.1
WEBS 2x4 SP No.2
OTHERS 2x4 SP No.2

BRACING

TOP CHORD Structural wood sheathing directly applied or 5-9-14 oc purlins, except end verticals, and 2-0-0 oc purlins (6-0-0 max.): 4-6.
BOT CHORD Rigid ceiling directly applied or 10-0-0 oc bracing.
WEBS 1 Row at midpt 5-7

REACTIONS (size) 7= Mechanical, 10=0-5-8
Max Horiz 10=172 (LC 14)
Max Uplift 7=-99 (LC 11), 10=-50 (LC 14)
Max Grav 7=871 (LC 3), 10=900 (LC 3)

FORCES (lb) - Maximum Compression/Maximum Tension
TOP CHORD 1-2=0/34, 2-3=-306/85, 3-4=-963/60, 4-5=-741/70, 5-6=-35/0, 6-7=-143/38, 2-10=-315/82
BOT CHORD 9-10=-165/842, 7-9=-80/531
WEBS 3-9=-157/124, 4-9=0/298, 5-9=-37/363, 5-7=-741/121, 3-10=-828/0

NOTES

1) Unbalanced roof live loads have been considered for this design.
2) Wind: ASCE 7-16; Vult=115mph (3-second gust) Vasd=91mph; TCDL=6.0psf; BCDL=3.0psf; h=25ft; Cat. II; Exp B; Enclosed; MWFRS (envelope) exterior zone and C-C Exterior(2E) -0-10-8 to 2-1-8, Interior (1) 2-1-8 to 8-6-6, Exterior(2R) 8-6-6 to 12-9-5, Interior (1) 12-9-5 to 19-8-4 zone; cantilever left and right exposed ; end vertical left exposed;C-C for members and forces & MWFRS for reactions shown; Lumber DOL=1.60 plate grip DOL=1.60
3) TCLL: ASCE 7-16; Pr=20.0 psf (roof LL: Lum DOL=1.15 Plate DOL=1.15); Pg=10.0 psf; Pf=12.7 psf (Lum DOL = 1.15 Plate DOL = 1.15); Is=1.0; Rough Cat B; Partially Exp.; Ce=1.0; Cs=1.00; Ct=1.10, Lu=50-0-0
4) This truss has been designed for greater of min roof live load of 12.0 psf or 1.00 times flat roof load of 7.7 psf on overhangs non-concurrent with other live loads.
5) Building Designer/Project engineer responsible for verifying Rain Load = 5.0 (psf) covers rain loading requirements specific to the use of this truss component.
6) Provide adequate drainage to prevent water ponding.
7) This truss has been designed for a 10.0 psf bottom chord live load nonconcurrent with any other live loads.
8) * This truss has been designed for a live load of 20.0psf on the bottom chord in all areas where a rectangle 3-06-00 tall by 2-00-00 wide will fit between the bottom chord and any other members, with BCDL = 10.0psf.
9) Refer to girder(s) for truss to truss connections.
10) Provide mechanical connection (by others) of truss to bearing plate capable of withstanding 99 lb uplift at joint 7 and 50 lb uplift at joint 10.
11) This truss is designed in accordance with the 2018 International Residential Code sections R502.11.1 and R802.10.2 and referenced standard ANSI/TPI 1.
12) Graphical purlin representation does not depict the size or the orientation of the purlin along the top and/or bottom chord.

LOAD CASE(S) Standard

July 17,2025

WARNING - Verify design parameters and READ NOTES ON THIS AND INCLUDED MITEK REFERENCE PAGE MII-7473 rev. 1/2/2023 BEFORE USE.
Design valid for use only with MiTek® connectors. This design is based only upon parameters shown, and is for an individual building component, not a truss system. Before use, the building designer must verify the applicability of design parameters and properly incorporate this design into the overall building design. Bracing indicated is to prevent buckling of individual truss web and/or chord members only. Additional temporary and permanent bracing is always required for stability and to prevent collapse with possible personal injury and property damage. For general guidance regarding the fabrication, storage, delivery, erection and bracing of trusses and truss systems, see **ANSI/TPI1 Quality Criteria and DSB-22** available from Truss Plate Institute (www.tpinst.org) and **BCSI Building Component Safety Information** available from the Structural Building Component Association (www.sbcacomponents.com)

ENGINEERING BY TRENCO A MiTek Affiliate
818 Soundside Road
Edenton, NC 27932

Job	Truss	Truss Type	Qty	Ply	914 Serenity
P05928-31416	C09	Half Hip	1	1	I74944970 Job Reference (optional)

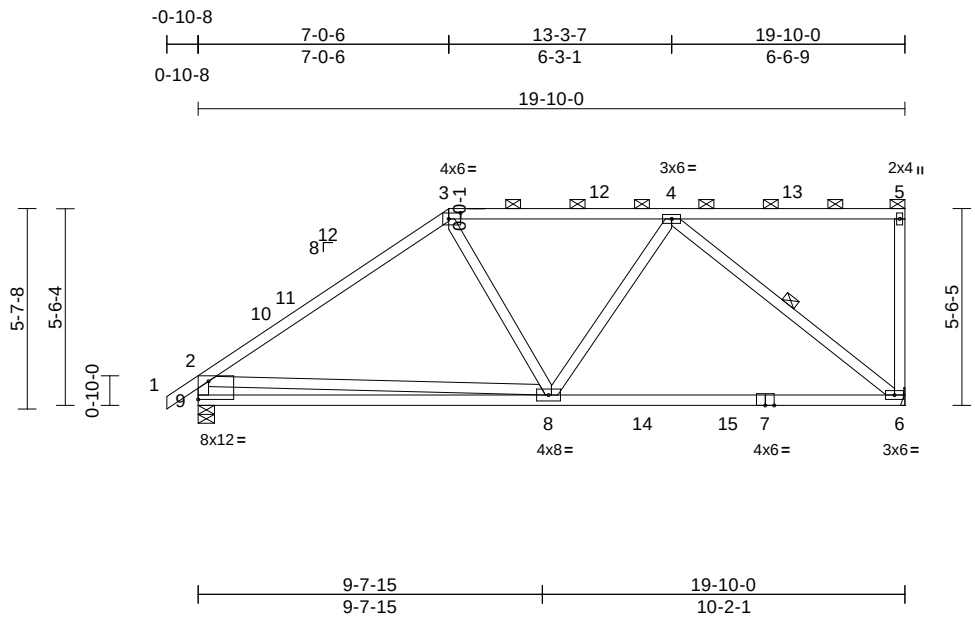

Scale = 1:64.7

Plate Offsets (X, Y): [3:0-4-0,0-2-0], [9:Edge,0-6-2]

Loading	(psf)	Spacing	2-0-0	CSI		DEFL	in	(loc)	l/defl	L/d	PLATES	GRIP
TCLL (roof)	20.0	Plate Grip DOL	1.15	TC	0.62	Vert(LL)	-0.31	6-8	>750	240	MT20	244/190
Snow (Pf/Pg)	12.7/10.0	Lumber DOL	1.15	BC	0.62	Vert(CT)	-0.53	6-8	>443	180		
TCDL	10.0	Rep Stress Incr	YES	WB	0.30	Horz(CT)	0.01	6	n/a	n/a		
BCLL	0.0*	Code	IRC2018/TPI2014	Matrix-MS								
BCDL	10.0										Weight: 114 lb	FT = 20%

LUMBER
TOP CHORD 2x4 SP No.2
BOT CHORD 2x4 SP DSS *Except* 7-6:2x4 SP No.1
WEBS 2x4 SP No.2

BRACING
TOP CHORD Structural wood sheathing directly applied or 5-4-1 oc purlins, except end verticals, and 2-0-0 oc purlins (5-9-9 max.): 3-5.
BOT CHORD Rigid ceiling directly applied or 10-0-0 oc bracing.
WEBS 1 Row at midpt 4-6

REACTIONS (size) 6= Mechanical, 9=0-5-8
Max Horiz 9=143 (LC 14)
Max Uplift 6=-101 (LC 11), 9=-47 (LC 14)
Max Grav 6=854 (LC 3), 9=894 (LC 3)

FORCES (lb) - Maximum Compression/Maximum Tension
TOP CHORD 1-2=0/34, 2-3=-1002/82, 3-4=-856/72, 4-5=0/0, 2-9=-763/73
BOT CHORD 8-9=-282/607, 6-8=-101/716
WEBS 5-6=-150/42, 3-8=-6/280, 4-8=-6/307, 4-6=-924/130, 2-8=-139/345

NOTES
1) Unbalanced roof live loads have been considered for this design.
2) Wind: ASCE 7-16; Vult=115mph (3-second gust) Vasd=91mph; TCDL=6.0psf; BCDL=3.0psf; h=25ft; Cat. II; Exp B; Enclosed; MWFRS (envelope) exterior zone and C-C Exterior(2E) -0-10-8 to 2-1-8, Interior (1) 2-1-8 to 7-0-6, Exterior(2R) 7-0-6 to 11-3-5, Interior (1) 11-3-5 to 19-8-4 zone; cantilever left and right exposed ; end vertical left exposed;C-C for members and forces & MWFRS for reactions shown; Lumber DOL=1.60 plate grip DOL=1.60
3) TCLL: ASCE 7-16; Pr=20.0 psf (roof LL: Lum DOL=1.15 Plate DOL=1.15); Pg=10.0 psf; Pf=12.7 psf (Lum DOL = 1.15 Plate DOL = 1.15); Is=1.0; Rough Cat B; Partially Exp.; Ce=1.0; Cs=1.00; Ct=1.10, Lu=50-0-0
4) This truss has been designed for greater of min roof live load of 12.0 psf or 1.00 times flat roof load of 7.7 psf on overhangs non-concurrent with other live loads.
5) Building Designer/Project engineer responsible for verifying Rain Load = 5.0 (psf) covers rain loading requirements specific to the use of this truss component.
6) Provide adequate drainage to prevent water ponding.
7) This truss has been designed for a 10.0 psf bottom chord live load nonconcurrent with any other live loads.
8) * This truss has been designed for a live load of 20.0psf on the bottom chord in all areas where a rectangle 3-06-00 tall by 2-00-00 wide will fit between the bottom chord and any other members, with BCDL = 10.0psf.
9) Refer to girder(s) for truss to truss connections.
10) Provide mechanical connection (by others) of truss to bearing plate capable of withstanding 47 lb uplift at joint 9 and 101 lb uplift at joint 6.
11) This truss is designed in accordance with the 2018 International Residential Code sections R502.11.1 and R802.10.2 and referenced standard ANSI/TPI 1.
12) Graphical purlin representation does not depict the size or the orientation of the purlin along the top and/or bottom chord.

LOAD CASE(S) Standard

July 17,2025

WARNING - Verify design parameters and READ NOTES ON THIS AND INCLUDED MITEK REFERENCE PAGE MII-7473 rev. 1/2/2023 BEFORE USE.
Design valid for use only with MiTek® connectors. This design is based only upon parameters shown, and is for an individual building component, not a truss system. Before use, the building designer must verify the applicability of design parameters and properly incorporate this design into the overall building design. Bracing indicated is to prevent buckling of individual truss web and/or chord members only. Additional temporary and permanent bracing is always required for stability and to prevent collapse with possible personal injury and property damage. For general guidance regarding the fabrication, storage, delivery, erection and bracing of trusses and truss systems, see **ANSI/TPI1 Quality Criteria and DSB-22** available from Truss Plate Institute (www.tpinst.org) and **BCSI Building Component Safety Information** available from the Structural Building Component Association (www.sbcacomponents.com)

ENGINEERING BY TRENCO A MiTek Affiliate
818 Soundside Road
Edenton, NC 27932

Job	Truss	Truss Type	Qty	Ply	914 Serenity
P05928-31416	C10	Half Hip	1	1	I74944971 Job Reference (optional)

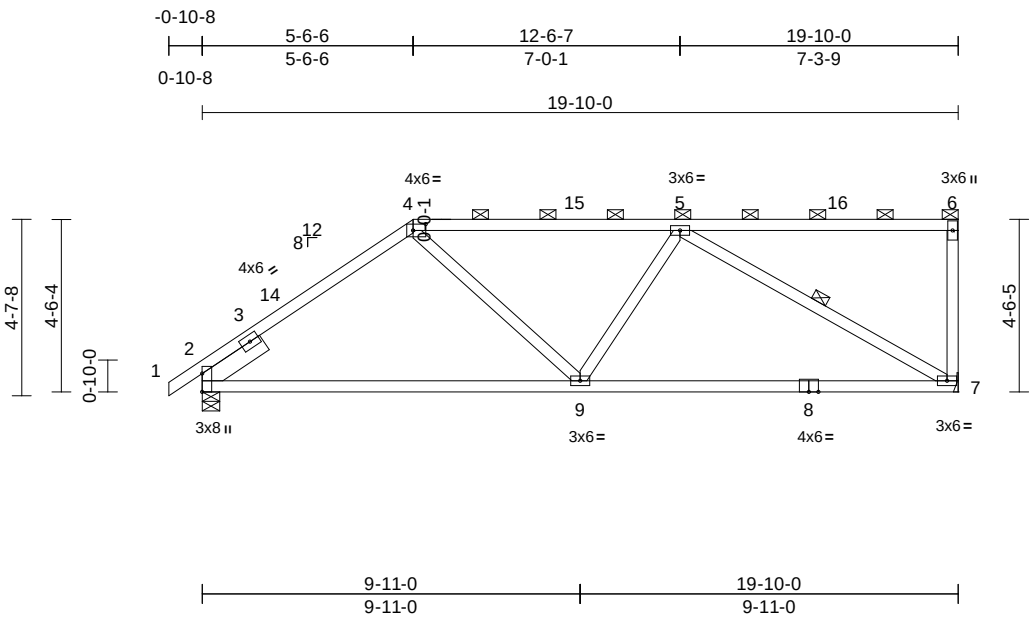

Scale = 1:60.4

Plate Offsets (X, Y): [2:Edge,0-0-0], [4:0-4-0,0-2-0]

Loading	(psf)	Spacing	2-0-0	CSI		DEFL	in	(loc)	l/defl	L/d	PLATES	GRIP
TCLL (roof)	20.0	Plate Grip DOL	1.15	TC	0.73	Vert(LL)	-0.21	7-9	>999	240	MT20	244/190
Snow (Pf/Pg)	12.7/10.0	Lumber DOL	1.15	BC	0.94	Vert(CT)	-0.43	7-9	>548	180		
TCDL	10.0	Rep Stress Incr	YES	WB	0.34	Horz(CT)	0.03	7	n/a	n/a		
BCLL	0.0*	Code	IRC2018/TPI2014	Matrix-MS								
BCDL	10.0										Weight: 101 lb	FT = 20%

LUMBER

TOP CHORD 2x4 SP No.2
BOT CHORD 2x4 SP No.2
WEBS 2x4 SP No.2
SLIDER Left 2x6 SP No.2 -- 1-11-0

BRACING

TOP CHORD Structural wood sheathing directly applied or 5-10-15 oc purlins, except end verticals, and 2-0-0 oc purlins (5-2-3 max.): 4-6.
BOT CHORD Rigid ceiling directly applied or 2-2-0 oc bracing.
WEBS 1 Row at midpt 5-7

REACTIONS (size) 2=0-5-8, 7= Mechanical
Max Horiz 2=121 (LC 14)
Max Uplift 2=-40 (LC 14), 7=-103 (LC 11)
Max Grav 2=841 (LC 2), 7=786 (LC 2)

FORCES (lb) - Maximum Compression/Maximum Tension
TOP CHORD 1-2=0/29, 2-4=-957/108, 4-5=-930/96, 5-6=-38/2, 6-7=-182/50
BOT CHORD 2-9=-154/741, 7-9=-134/912
WEBS 4-9=-24/327, 5-9=-10/237, 5-7=-1016/154

NOTES

1) Unbalanced roof live loads have been considered for this design.
2) Wind: ASCE 7-16; Vult=115mph (3-second gust) Vasd=91mph; TCDL=6.0psf; BCDL=3.0psf; h=25ft; Cat. II; Exp B; Enclosed; MWFRS (envelope) exterior zone and C-C Exterior(2E) -0-10-8 to 2-1-8, Interior (1) 2-1-8 to 5-6-6, Exterior(2R) 5-6-6 to 9-9-5, Interior (1) 9-9-5 to 19-8-4 zone; cantilever left and right exposed ; end vertical left exposed;C-C for members and forces & MWFRS for reactions shown; Lumber DOL=1.60 plate grip DOL=1.60
3) TCLL: ASCE 7-16; Pr=20.0 psf (roof LL: Lum DOL=1.15 Plate DOL=1.15); Pg=10.0 psf; Pf=12.7 psf (Lum DOL = 1.15 Plate DOL = 1.15); Is=1.0; Rough Cat B; Partially Exp.; Ce=1.0; Cs=1.00; Ct=1.10, Lu=50-0-0
4) This truss has been designed for greater of min roof live load of 12.0 psf or 1.00 times flat roof load of 7.7 psf on overhangs non-concurrent with other live loads.
5) Building Designer/Project engineer responsible for verifying Rain Load = 5.0 (psf) covers rain loading requirements specific to the use of this truss component.
6) Provide adequate drainage to prevent water ponding.
7) This truss has been designed for a 10.0 psf bottom chord live load nonconcurrent with any other live loads.
8) * This truss has been designed for a live load of 20.0psf on the bottom chord in all areas where a rectangle 3-06-00 tall by 2-00-00 wide will fit between the bottom chord and any other members.
9) Refer to girder(s) for truss to truss connections.
10) Provide mechanical connection (by others) of truss to bearing plate capable of withstanding 40 lb uplift at joint 2 and 103 lb uplift at joint 7.
11) This truss is designed in accordance with the 2018 International Residential Code sections R502.11.1 and R802.10.2 and referenced standard ANSI/TPI 1.
12) Graphical purlin representation does not depict the size or the orientation of the purlin along the top and/or bottom chord.

LOAD CASE(S) Standard

July 17,2025

WARNING - Verify design parameters and READ NOTES ON THIS AND INCLUDED MITEK REFERENCE PAGE MII-7473 rev. 1/2/2023 BEFORE USE.
Design valid for use only with MiTek® connectors. This design is based only upon parameters shown, and is for an individual building component, not a truss system. Before use, the building designer must verify the applicability of design parameters and properly incorporate this design into the overall building design. Bracing indicated is to prevent buckling of individual truss web and/or chord members only. Additional temporary and permanent bracing is always required for stability and to prevent collapse with possible personal injury and property damage. For general guidance regarding the fabrication, storage, delivery, erection and bracing of trusses and truss systems, see **ANSI/TPI1 Quality Criteria and DSB-22** available from Truss Plate Institute (www.tpinst.org) and **BCSI Building Component Safety Information** available from the Structural Building Component Association (www.sbcacomponents.com)

ENGINEERING BY TRENCO A MiTek Affiliate
818 Soundside Road
Edenton, NC 27932

Job	Truss	Truss Type	Qty	Ply	914 Serenity
P05928-31416	C11	Half Hip	1	1	I74944972 Job Reference (optional)

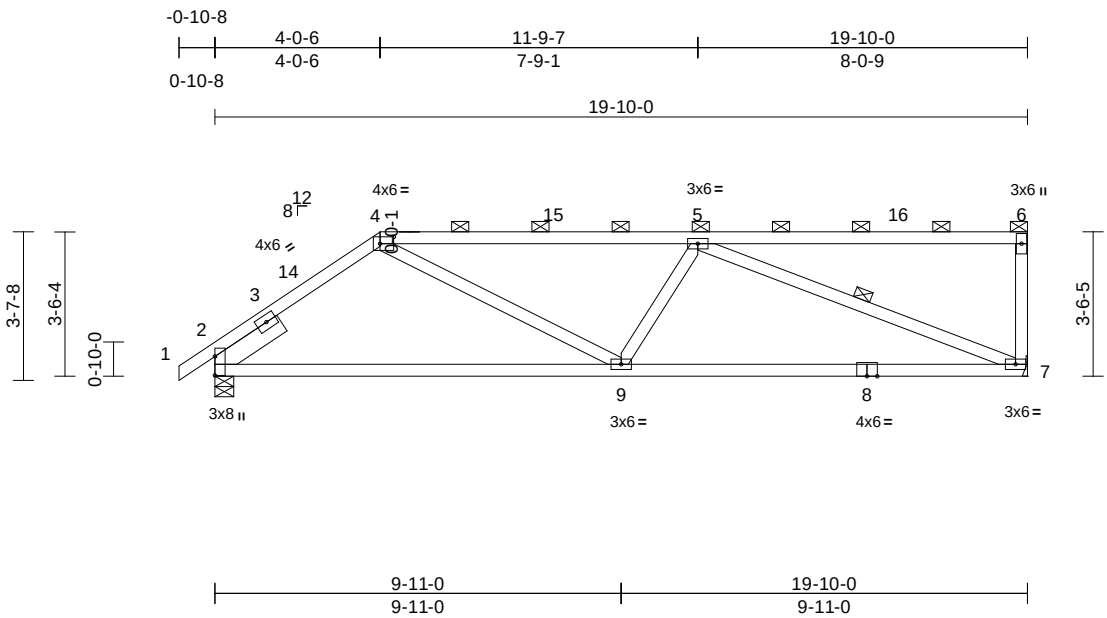

Scale = 1:56.2

Plate Offsets (X, Y): [2:Edge,0-0-0], [4:0-4-0,0-2-0]

Loading	(psf)	Spacing	2-0-0	CSI		DEFL	in	(loc)	l/defl	L/d	PLATES	GRIP
TCLL (roof)	20.0	Plate Grip DOL	1.15	TC	0.89	Vert(LL)	-0.22	7-9	>999	240	MT20	244/190
Snow (Pf/Pg)	12.7/10.0	Lumber DOL	1.15	BC	0.96	Vert(CT)	-0.45	7-9	>525	180		
TCDL	10.0	Rep Stress Incr	YES	WB	0.46	Horz(CT)	0.03	7	n/a	n/a		
BCLL	0.0*	Code	IRC2018/TPI2014	Matrix-MS								
BCDL	10.0										Weight: 98 lb	FT = 20%

LUMBER

TOP CHORD 2x4 SP No.2
BOT CHORD 2x4 SP No.2
WEBS 2x4 SP No.2
SLIDER Left 2x6 SP No.2 -- 1-11-0

BRACING

TOP CHORD Structural wood sheathing directly applied or 5-8-6 oc purlins, except end verticals, and 2-0-0 oc purlins (3-8-11 max.): 4-6.
BOT CHORD Rigid ceiling directly applied or 2-2-0 oc bracing.
WEBS 1 Row at midpt 5-7

REACTIONS (size) 2=0-5-8, 7= Mechanical
Max Horiz 2=92 (LC 14)
Max Uplift 2=-56 (LC 11), 7=-105 (LC 11)
Max Grav 2=841 (LC 2), 7=786 (LC 2)

FORCES (lb) - Maximum Compression/Maximum Tension
TOP CHORD 1-2=0/29, 2-4=-993/132, 4-5=-1241/139, 5-6=-62/4, 6-7=-203/55
BOT CHORD 2-9=-115/788, 7-9=-185/1268
WEBS 4-9=-52/549, 5-9=-76/201, 5-7=-1304/195

NOTES

1) Unbalanced roof live loads have been considered for this design.
2) Wind: ASCE 7-16; Vult=115mph (3-second gust) Vasd=91mph; TCDL=6.0psf; BCDL=3.0psf; h=25ft; Cat. II; Exp B; Enclosed; MWFRS (envelope) exterior zone and C-C Exterior(2E) -0-10-8 to 2-1-8, Interior (1) 2-1-8 to 4-0-6, Exterior(2R) 4-0-6 to 8-3-5, Interior (1) 8-3-5 to 19-8-4 zone; cantilever left and right exposed ; end vertical left exposed;C-C for members and forces & MWFRS for reactions shown; Lumber DOL=1.60 plate grip DOL=1.60
3) TCLL: ASCE 7-16; Pr=20.0 psf (roof LL: Lum DOL=1.15 Plate DOL=1.15); Pg=10.0 psf; Pf=12.7 psf (Lum DOL = 1.15 Plate DOL = 1.15); Is=1.0; Rough Cat B; Partially Exp.; Ce=1.0; Cs=1.00; Ct=1.10, Lu=50-0-0
4) This truss has been designed for greater of min roof live load of 12.0 psf or 1.00 times flat roof load of 7.7 psf on overhangs non-concurrent with other live loads.
5) Building Designer/Project engineer responsible for verifying Rain Load = 5.0 (psf) covers rain loading requirements specific to the use of this truss component.
6) Provide adequate drainage to prevent water ponding.
7) This truss has been designed for a 10.0 psf bottom chord live load nonconcurrent with any other live loads.
8) * This truss has been designed for a live load of 20.0psf on the bottom chord in all areas where a rectangle 3-06-00 tall by 2-00-00 wide will fit between the bottom chord and any other members.
9) Refer to girder(s) for truss to truss connections.
10) Provide mechanical connection (by others) of truss to bearing plate capable of withstanding 56 lb uplift at joint 2 and 105 lb uplift at joint 7.
11) This truss is designed in accordance with the 2018 International Residential Code sections R502.11.1 and R802.10.2 and referenced standard ANSI/TPI 1.
12) Graphical purlin representation does not depict the size or the orientation of the purlin along the top and/or bottom chord.

LOAD CASE(S) Standard

July 17,2025

WARNING - Verify design parameters and READ NOTES ON THIS AND INCLUDED MITEK REFERENCE PAGE MII-7473 rev. 1/2/2023 BEFORE USE.
Design valid for use only with MiTek® connectors. This design is based only upon parameters shown, and is for an individual building component, not a truss system. Before use, the building designer must verify the applicability of design parameters and properly incorporate this design into the overall building design. Bracing indicated is to prevent buckling of individual truss web and/or chord members only. Additional temporary and permanent bracing is always required for stability and to prevent collapse with possible personal injury and property damage. For general guidance regarding the fabrication, storage, delivery, erection and bracing of trusses and truss systems, see **ANSI/TPI1 Quality Criteria and DSB-22** available from Truss Plate Institute (www.tpinst.org) and **BCSI Building Component Safety Information** available from the Structural Building Component Association (www.sbcacomponents.com)

ENGINEERING BY TRENCO A MiTek Affiliate
818 Soundside Road
Edenton, NC 27932

Job	Truss	Truss Type	Qty	Ply	914 Serenity
P05928-31416	C12G	Half Hip Girder	1	1	I74944973 Job Reference (optional)

84 Lumber-2383 (Dunn, NC), Dunn, NC - 28334, Run: 8.83 S Jun 11 2025 Print: 8.830 S Jun 11 2025 MiTek Industries, Inc. Wed Jul 16 10:26:38 Page: 1
ID:0dM?pb6_YEWCBXzW9u1xnezxXR_-RfC?PsB70Hq3NSgPqnL8w3uITXbGKWrCDoi7J4zJC?f

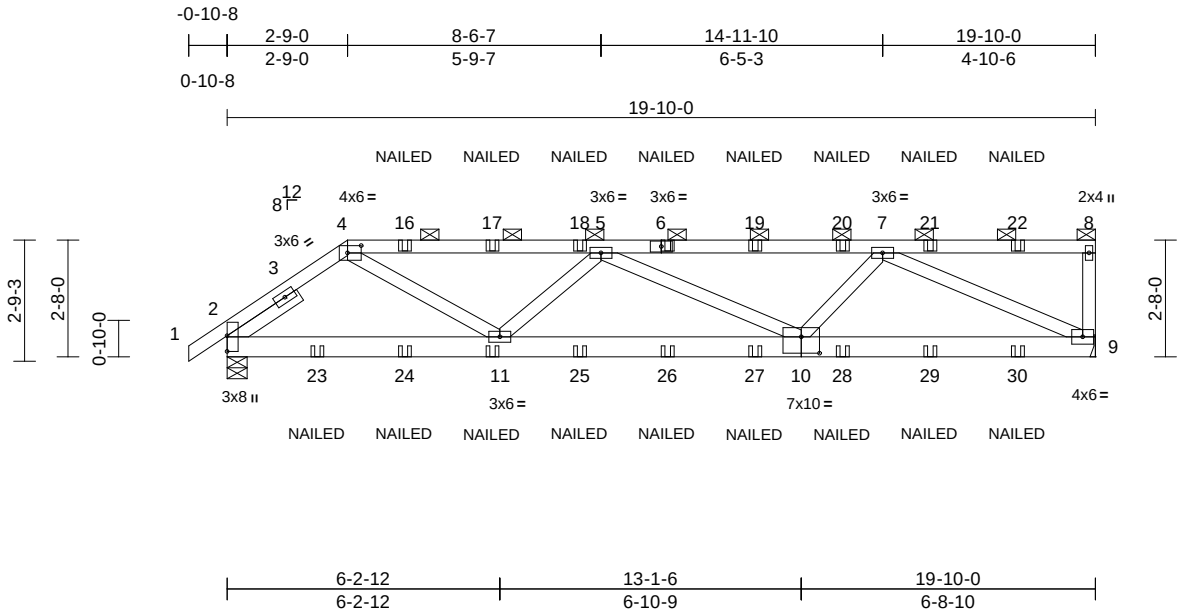

Scale = 1:52.6

Plate Offsets (X, Y): [4:0-3-12,0-2-0], [10:0-5-0,0-4-8]

Loading	(psf)	Spacing	2-0-0	CSI		DEFL	in	(loc)	l/defl	L/d	PLATES	GRIP
TCLL (roof)	20.0	Plate Grip DOL	1.15	TC	0.74	Vert(LL)	-0.08	10-11	>999	240	MT20	244/190
Snow (Pf/Pg)	12.7/10.0	Lumber DOL	1.15	BC	0.59	Vert(CT)	-0.17	10-11	>999	180		
TCDL	10.0	Rep Stress Incr	NO	WB	0.94	Horz(CT)	0.04	9	n/a	n/a		
BCLL	0.0*	Code	IRC2018/TPI2014	Matrix-MS								
BCDL	10.0										Weight: 113 lb	FT = 20%

LUMBER

TOP CHORD	2x4 SP No.2
BOT CHORD	2x6 SP No.2
WEBS	2x4 SP No.2
SLIDER	Left 2x4 SP No.2 -- 1-11-0

BRACING

TOP CHORD	Structural wood sheathing directly applied or 4-8-15 oc purlins, except end verticals, and 2-0-0 oc purlins (3-4-9 max.): 4-8.
BOT CHORD	Rigid ceiling directly applied or 10-0-0 oc bracing.

REACTIONS (size) 2=0-5-8, 9= Mechanical
Max Horiz 2=68 (LC 10)
Max Uplift 2=-163 (LC 7), 9=-190 (LC 7)
Max Grav 2=1167 (LC 2), 9=1083 (LC 2)

FORCES (lb) - Maximum Compression/Maximum Tension

TOP CHORD	1-2=0/29, 2-4=-1435/260, 4-5=-2030/331, 5-7=-2098/337, 7-8=-47/7, 8-9=-143/47
BOT CHORD	2-11=-220/1163, 9-11=-463/2413
WEBS	5-11=-552/197, 4-11=-137/1047, 5-10=-353/141, 7-10=0/577, 7-9=-1940/374

NOTES

1) Unbalanced roof live loads have been considered for this design.
2) Wind: ASCE 7-16; Vult=115mph (3-second gust) Vasd=91mph; TCDL=6.0psf; BCDL=3.0psf; h=25ft; Cat. II; Exp B; Enclosed; MWFRS (envelope) exterior zone; cantilever left and right exposed ; end vertical left exposed; Lumber DOL=1.60 plate grip DOL=1.60
3) TCLL: ASCE 7-16; Pr=20.0 psf (roof LL: Lum DOL=1.15 Plate DOL=1.15); Pg=10.0 psf; Pf=12.7 psf (Lum DOL = 1.15 Plate DOL = 1.15); Is=1.0; Rough Cat B; Partially Exp.; Ce=1.0; Cs=1.00; Ct=1.10, Lu=50-0-0
4) This truss has been designed for greater of min roof live load of 12.0 psf or 1.00 times flat roof load of 7.7 psf on overhangs non-concurrent with other live loads.
5) Building Designer/Project engineer responsible for verifying Rain Load = 5.0 (psf) covers rain loading requirements specific to the use of this truss component.
6) Provide adequate drainage to prevent water ponding.
7) This truss has been designed for a 10.0 psf bottom chord live load nonconcurrent with any other live loads.
8) * This truss has been designed for a live load of 20.0psf on the bottom chord in all areas where a rectangle 3-06-00 tall by 2-00-00 wide will fit between the bottom chord and any other members.
9) Refer to girder(s) for truss to truss connections.
10) Provide mechanical connection (by others) of truss to bearing plate capable of withstanding 190 lb uplift at joint 9 and 163 lb uplift at joint 2.
11) This truss is designed in accordance with the 2018 International Residential Code sections R502.11.1 and R802.10.2 and referenced standard ANSI/TPI 1.
12) Graphical purlin representation does not depict the size or the orientation of the purlin along the top and/or bottom chord.
13) "NAILED" indicates 3-10d (0.148"x3") or 3-12d (0.148"x3.25") toe-nails per NDS guidlines.
14) In the LOAD CASE(S) section, loads applied to the face of the truss are noted as front (F) or back (B).

LOAD CASE(S) Standard

1) Dead + Snow (balanced): Lumber Increase=1.15, Plate Increase=1.15
   Uniform Loads (lb/ft)
   Vert: 1-4=-35, 4-8=-45, 9-12=-20
   Concentrated Loads (lb)
   Vert: 6=-47 (F), 11=-23 (F), 16=-47 (F), 17=-47 (F), 18=-47 (F), 19=-47 (F), 20=-47 (F), 21=-47 (F), 22=-47 (F), 23=-98 (F), 24=-23 (F), 25=-23 (F), 26=-23 (F), 27=-23 (F), 28=-23 (F), 29=-23 (F), 30=-23 (F)

July 17,2025

WARNING - Verify design parameters and READ NOTES ON THIS AND INCLUDED MITEK REFERENCE PAGE MII-7473 rev. 1/2/2023 BEFORE USE.
Design valid for use only with MiTek® connectors. This design is based only upon parameters shown, and is for an individual building component, not a truss system. Before use, the building designer must verify the applicability of design parameters and properly incorporate this design into the overall building design. Bracing indicated is to prevent buckling of individual truss web and/or chord members only. Additional temporary and permanent bracing is always required for stability and to prevent collapse with possible personal injury and property damage. For general guidance regarding the fabrication, storage, delivery, erection and bracing of trusses and truss systems, see **ANSI/TPI1 Quality Criteria and DSB-22** available from Truss Plate Institute (www.tpinst.org) and **BCSI Building Component Safety Information** available from the Structural Building Component Association (www.sbcacomponents.com)

ENGINEERING BY TRENCO A MiTek Affiliate
818 Soundside Road
Edenton, NC 27932

Job	Truss	Truss Type	Qty	Ply	914 Serenity
P05928-31416	D01E	Common Supported Gable	1	1	I74944974 Job Reference (optional)

84 Lumber-2383 (Dunn, NC), Dunn, NC - 28334, Run: 8.83 S Jun 11 2025 Print: 8.830 S Jun 11 2025 MiTek Industries, Inc. Wed Jul 16 10:26:39 Page: 1
ID:OwrMIK6IZ3sVt6i8IY25FHzxCBS-RfC?PsB70Hq3NSgPqnL8w3uITXbGKWrCDoi7J4zJC?f

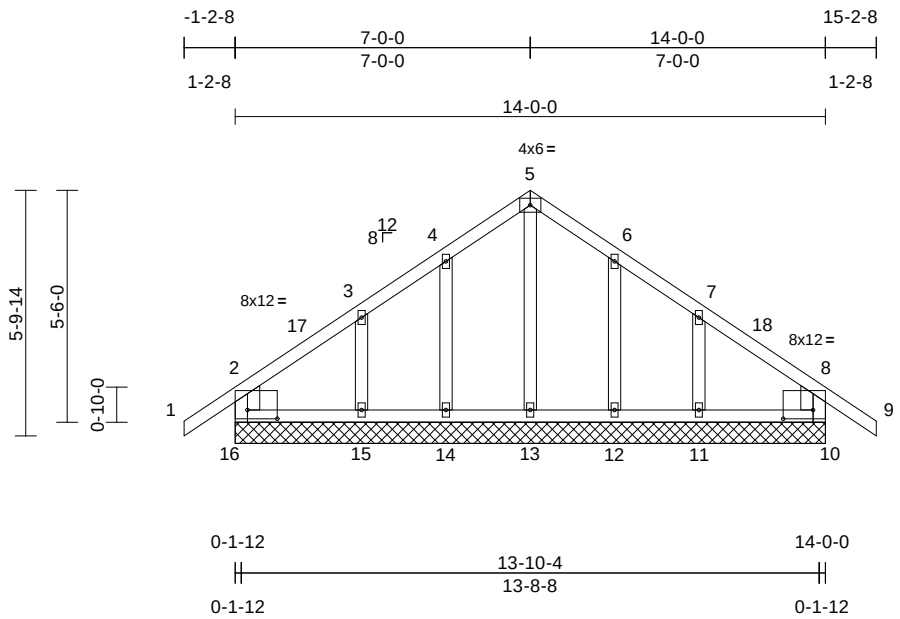

Scale = 1:54.6

Plate Offsets (X, Y): [2:0-8-8,0-2-8], [8:0-8-8,0-2-8]

Loading	(psf)	Spacing	2-0-0	CSI		DEFL	in	(loc)	l/defl	L/d	PLATES	GRIP
TCLL (roof)	20.0	Plate Grip DOL	1.15	TC	0.18	Vert(LL)	n/a	-	n/a	999	MT20	244/190
Snow (Pf/Pg)	7.7/10.0	Lumber DOL	1.15	BC	0.08	Vert(CT)	n/a	-	n/a	999		
TCDL	10.0	Rep Stress Incr	NO	WB	0.06	Horz(CT)	0.00	10	n/a	n/a		
BCLL	0.0*	Code	IRC2018/TPI2014	Matrix-MR								
BCDL	10.0										Weight: 78 lb	FT = 20%

LUMBER

TOP CHORD	2x4 SP No.2
BOT CHORD	2x4 SP No.2
WEBS	2x4 SP No.2
OTHERS	2x4 SP No.2

BRACING

TOP CHORD	Structural wood sheathing directly applied or 6-0-0 oc purlins, except end verticals.
BOT CHORD	Rigid ceiling directly applied or 6-0-0 oc bracing.

REACTIONS (size) 10=14-0-0, 11=14-0-0, 12=14-0-0, 13=14-0-0, 14=14-0-0, 15=14-0-0, 16=14-0-0
Max Horiz 16=-120 (LC 12)
Max Uplift 10=-30 (LC 14), 11=-81 (LC 15), 12=-42 (LC 15), 14=-40 (LC 14), 15=-78 (LC 14), 16=-33 (LC 15)
Max Grav 10=241 (LC 2), 11=263 (LC 27), 12=179 (LC 33), 13=167 (LC 29), 14=172 (LC 32), 15=227 (LC 26), 16=218 (LC 2)

FORCES (lb) - Maximum Compression/Maximum Tension
TOP CHORD 2-16=-190/116, 1-2=0/50, 2-3=-106/65, 3-4=-91/120, 4-5=-115/173, 5-6=-115/172, 6-7=-92/121, 7-8=-90/56, 8-9=0/50, 8-10=-188/115
BOT CHORD 15-16=-38/67, 14-15=-38/67, 13-14=-38/67, 12-13=-38/67, 11-12=-38/67, 10-11=-38/67
WEBS 5-13=-134/42, 4-14=-123/71, 3-15=-154/107, 6-12=-122/71, 7-11=-154/108

NOTES

1) Unbalanced roof live loads have been considered for this design.
2) Wind: ASCE 7-16; Vult=115mph (3-second gust) Vasd=91mph; TCDL=6.0psf; BCDL=3.0psf; h=25ft; Cat. II; Exp B; Enclosed; MWFRS (envelope) exterior zone and C-C Corner(3E) -1-2-8 to 1-9-8, Exterior(2N) 1-9-8 to 7-0-0, Corner(3R) 7-0-0 to 10-0-0, Exterior(2N) 10-0-0 to 15-2-8 zone; cantilever left and right exposed ; end vertical left and right exposed;C-C for members and forces & MWFRS for reactions shown; Lumber DOL=1.60 plate grip DOL=1.60
3) Truss designed for wind loads in the plane of the truss only. For studs exposed to wind (normal to the face), see Standard Industry Gable End Details as applicable, or consult qualified building designer as per ANSI/TPI 1.
4) TCLL: ASCE 7-16; Pr=20.0 psf (roof LL: Lum DOL=1.15 Plate DOL=1.15); Pg=10.0 psf; Pf=7.7 psf (Lum DOL = 1.15 Plate DOL = 1.15); Is=1.0; Rough Cat B; Partially Exp.; Ce=1.0; Cs=1.00; Ct=1.10
5) This truss has been designed for greater of min roof live load of 12.0 psf or 1.00 times flat roof load of 7.7 psf on overhangs non-concurrent with other live loads.
6) Building Designer/Project engineer responsible for verifying Rain Load = 5.0 (psf) covers rain loading requirements specific to the use of this truss component.
7) All plates are 2x4 (||) MT20 unless otherwise indicated.
8) Gable requires continuous bottom chord bearing.
9) Truss to be fully sheathed from one face or securely braced against lateral movement (i.e. diagonal web).
10) Gable studs spaced at 2-0-0 oc.
11) This truss has been designed for a 10.0 psf bottom chord live load nonconcurrent with any other live loads.
12) * This truss has been designed for a live load of 20.0psf on the bottom chord in all areas where a rectangle 3-06-00 tall by 2-00-00 wide will fit between the bottom chord and any other members.
13) Bearing at joint(s) 16, 10 considers parallel to grain value using ANSI/TPI 1 angle to grain formula. Building designer should verify capacity of bearing surface.
14) Provide mechanical connection (by others) of truss to bearing plate capable of withstanding 33 lb uplift at joint 16, 30 lb uplift at joint 10, 40 lb uplift at joint 14, 78 lb uplift at joint 15, 42 lb uplift at joint 12 and 81 lb uplift at joint 11.
15) This truss is designed in accordance with the 2018 International Residential Code sections R502.11.1 and R802.10.2 and referenced standard ANSI/TPI 1.
16) In the LOAD CASE(S) section, loads applied to the face of the truss are noted as front (F) or back (B).

LOAD CASE(S) Standard

1) Dead + Snow (balanced): Lumber Increase=1.15, Plate Increase=1.15
   Uniform Loads (lb/ft)
   Vert: 1-2=-35, 2-5=-35, 5-8=-35, 8-9=-35
   Trapezoidal Loads (lb/ft)
   Vert: 16=-20-to-15=-23 (F=-3), 15=-23 (F=-3)-to-14=-25 (F=-5), 14=-25 (F=-5)-to-13=-27 (F=-7), 13=-27 (F=-7)-to-12=-30 (F=-10), 12=-30 (F=-10)-to-11=-32 (F=-12), 11=-32 (F=-12)-to-10=-35 (F=-15)

July 17,2025

WARNING - Verify design parameters and READ NOTES ON THIS AND INCLUDED MITEK REFERENCE PAGE MII-7473 rev. 1/2/2023 BEFORE USE.
Design valid for use only with MiTek® connectors. This design is based only upon parameters shown, and is for an individual building component, not a truss system. Before use, the building designer must verify the applicability of design parameters and properly incorporate this design into the overall building design. Bracing indicated is to prevent buckling of individual truss web and/or chord members only. Additional temporary and permanent bracing is always required for stability and to prevent collapse with possible personal injury and property damage. For general guidance regarding the fabrication, storage, delivery, erection and bracing of trusses and truss systems, see **ANSI/TPI1 Quality Criteria and DSB-22** available from Truss Plate Institute (www.tpinst.org) and **BCSI Building Component Safety Information** available from the Structural Building Component Association (www.sbcacomponents.com)

ENGINEERING BY TRENCO A MiTek Affiliate
818 Soundside Road
Edenton, NC 27932

Job	Truss	Truss Type	Qty	Ply	914 Serenity
P05928-31416	D02	Common	4	1	I74944975 Job Reference (optional)

84 Lumber-2383 (Dunn, NC), Dunn, NC - 28334, Run: 8.83 S Jun 11 2025 Print: 8.830 S Jun 11 2025 MiTek Industries, Inc. Wed Jul 16 10:26:39 Page: 1
ID:wkH_5_5gomkeFy7ylqXsi4zxCBT-RfC?PsB70Hq3NSgPqnL8w3uITXbGKWrCDoi7J4zJC?f

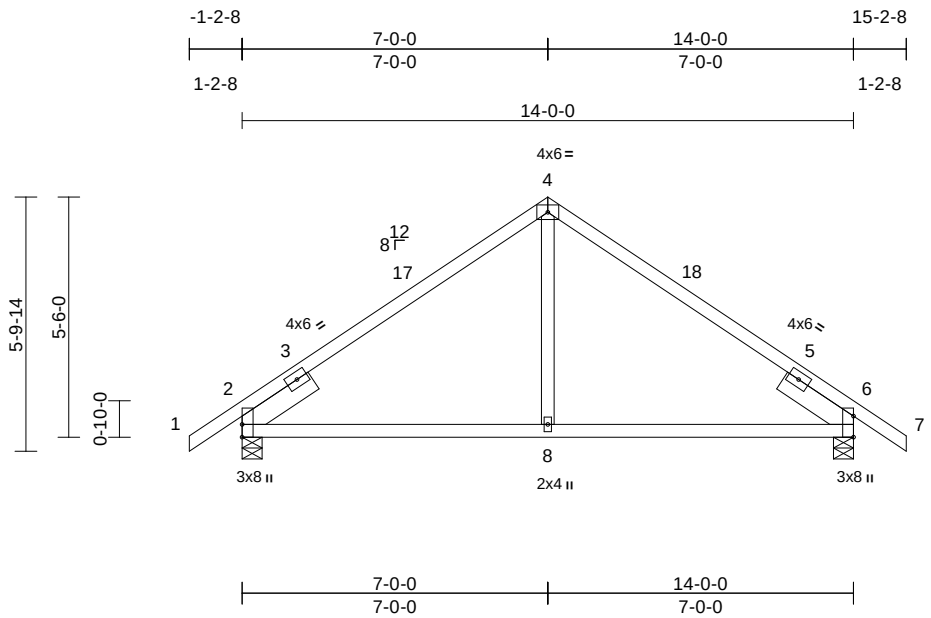

Scale = 1:52.8

Plate Offsets (X, Y): [2:Edge,0-0-0], [6:Edge,0-0-0]

Loading	(psf)	Spacing	2-0-0	CSI		DEFL	in	(loc)	l/defl	L/d	PLATES	GRIP
TCLL (roof)	20.0	Plate Grip DOL	1.15	TC	0.55	Vert(LL)	-0.07	8-11	>999	240	MT20	244/190
Snow (Pf/Pg)	7.7/10.0	Lumber DOL	1.15	BC	0.45	Vert(CT)	-0.11	8-11	>999	180		
TCDL	10.0	Rep Stress Incr	YES	WB	0.07	Horz(CT)	0.03	2	n/a	n/a		
BCLL	0.0*	Code	IRC2018/TPI2014	Matrix-MS								
BCDL	10.0										Weight: 67 lb	FT = 20%

LUMBER

TOP CHORD 2x4 SP No.2
BOT CHORD 2x4 SP No.2
WEBS 2x4 SP No.2
SLIDER Left 2x6 SP No.2 -- 1-11-0, Right 2x6 SP No.2 -- 1-11-0

BRACING

TOP CHORD Structural wood sheathing directly applied or 6-0-0 oc purlins.
BOT CHORD Rigid ceiling directly applied or 10-0-0 oc bracing.

REACTIONS (size) 2=0-5-8, 6=0-5-8
Max Horiz 2=-101 (LC 12)
Max Uplift 2=-57 (LC 14), 6=-57 (LC 15)
Max Grav 2=633 (LC 2), 6=633 (LC 2)

FORCES (lb) - Maximum Compression/Maximum Tension
TOP CHORD 1-2=0/40, 2-4=-510/112, 4-6=-510/112, 6-7=0/40
BOT CHORD 2-8=-150/424, 6-8=-100/424
WEBS 4-8=0/302

NOTES

1) Unbalanced roof live loads have been considered for this design.
2) Wind: ASCE 7-16; Vult=115mph (3-second gust) Vasd=91mph; TCDL=6.0psf; BCDL=3.0psf; h=25ft; Cat. II; Exp B; Enclosed; MWFRS (envelope) exterior zone and C-C Exterior(2E) -1-2-8 to 1-9-8, Interior (1) 1-9-8 to 7-0-0, Exterior(2R) 7-0-0 to 10-0-0, Interior (1) 10-0-0 to 15-2-8 zone; cantilever left and right exposed ; end vertical left and right exposed;C-C for members and forces & MWFRS for reactions shown; Lumber DOL=1.60 plate grip DOL=1.60
3) TCLL: ASCE 7-16; Pr=20.0 psf (roof LL: Lum DOL=1.15 Plate DOL=1.15); Pg=10.0 psf; Pf=7.7 psf (Lum DOL = 1.15 Plate DOL = 1.15); Is=1.0; Rough Cat B; Partially Exp.; Ce=1.0; Cs=1.00; Ct=1.10
4) This truss has been designed for greater of min roof live load of 12.0 psf or 1.00 times flat roof load of 7.7 psf on overhangs non-concurrent with other live loads.
5) Building Designer/Project engineer responsible for verifying Rain Load = 5.0 (psf) covers rain loading requirements specific to the use of this truss component.
6) This truss has been designed for a 10.0 psf bottom chord live load nonconcurrent with any other live loads.
7) * This truss has been designed for a live load of 20.0psf on the bottom chord in all areas where a rectangle 3-06-00 tall by 2-00-00 wide will fit between the bottom chord and any other members.
8) Provide mechanical connection (by others) of truss to bearing plate capable of withstanding 57 lb uplift at joint 2 and 57 lb uplift at joint 6.
9) This truss is designed in accordance with the 2018 International Residential Code sections R502.11.1 and R802.10.2 and referenced standard ANSI/TPI 1.

LOAD CASE(S) Standard

July 17,2025

WARNING - Verify design parameters and READ NOTES ON THIS AND INCLUDED MITEK REFERENCE PAGE MII-7473 rev. 1/2/2023 BEFORE USE.
Design valid for use only with MiTek® connectors. This design is based only upon parameters shown, and is for an individual building component, not a truss system. Before use, the building designer must verify the applicability of design parameters and properly incorporate this design into the overall building design. Bracing indicated is to prevent buckling of individual truss web and/or chord members only. Additional temporary and permanent bracing is always required for stability and to prevent collapse with possible personal injury and property damage. For general guidance regarding the fabrication, storage, delivery, erection and bracing of trusses and truss systems, see **ANSI/TPI1 Quality Criteria and DSB-22** available from Truss Plate Institute (www.tpinst.org) and **BCSI Building Component Safety Information** available from the Structural Building Component Association (www.sbcacomponents.com)

ENGINEERING BY TRENCO A MiTek Affiliate
818 Soundside Road
Edenton, NC 27932

Job	Truss	Truss Type	Qty	Ply	914 Serenity
P05928-31416	J01	Jack-Open	2	1	I74944976 Job Reference (optional)

84 Lumber-2383 (Dunn, NC), Dunn, NC - 28334,

Run: 8.83 S Jun 11 2025 Print: 8.830 S Jun 11 2025 MiTek Industries, Inc. Wed Jul 16 10:26:39 Page: 1
ID:s6PlWg6wKN_MUGGKsFaKnVzxCBR-RfC?PsB70Hq3NSgPqnL8w3uITXbGKWrCDoi7J4zJC?f

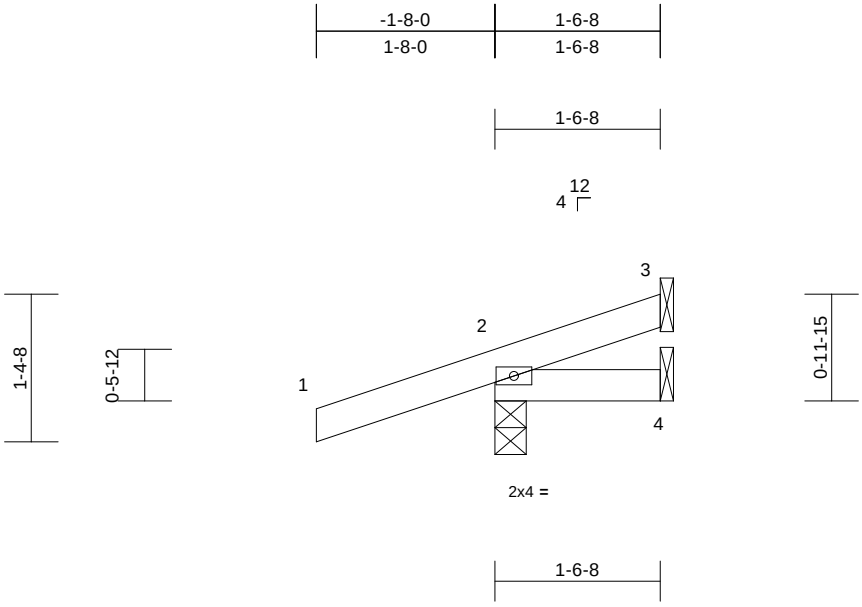

Scale = 1:21.5

Loading	(psf)	Spacing	2-0-0	CSI		DEFL	in	(loc)	l/defl	L/d	PLATES	GRIP
TCLL (roof)	20.0	Plate Grip DOL	1.15	TC	0.19	Vert(LL)	0.00	4-7	>999	240	MT20	244/190
Snow (Pf/Pg)	7.7/10.0	Lumber DOL	1.15	BC	0.05	Vert(CT)	0.00	4-7	>999	180		
TCDL	10.0	Rep Stress Incr	YES	WB	0.00	Horz(CT)	0.00	2	n/a	n/a		
BCLL	0.0*	Code	IRC2018/TPI2014	Matrix-MP								
BCDL	10.0										Weight: 7 lb	FT = 20%

LUMBER
TOP CHORD 2x4 SP No.2
BOT CHORD 2x4 SP No.2

BRACING
TOP CHORD Structural wood sheathing directly applied or 2-0-0 oc purlins.
BOT CHORD Rigid ceiling directly applied or 10-0-0 oc bracing.

REACTIONS (size) 2=0-3-8, 3= Mechanical, 4= Mechanical
Max Horiz 2=36 (LC 12)
Max Uplift 2=-83 (LC 12), 3=-6 (LC 16), 4=-6 (LC 2)
Max Grav 2=216 (LC 2), 3=13 (LC 2), 4=18 (LC 7)

FORCES (lb) - Maximum Compression/Maximum Tension
TOP CHORD 1-2=0/32, 2-3=-103/130
BOT CHORD 2-4=-95/61

NOTES
1) Wind: ASCE 7-16; Vult=115mph (3-second gust) Vasd=91mph; TCDL=6.0psf; BCDL=3.0psf; h=25ft; Cat. II; Exp B; Enclosed; MWFRS (envelope) exterior zone and C-C Exterior(2E) zone; cantilever left and right exposed ; end vertical left and right exposed; porch left exposed;C-C for members and forces & MWFRS for reactions shown; Lumber DOL=1.60 plate grip DOL=1.60
2) TCLL: ASCE 7-16; Pr=20.0 psf (roof LL: Lum DOL=1.15 Plate DOL=1.15); Pg=10.0 psf; Pf=7.7 psf (Lum DOL = 1.15 Plate DOL = 1.15); Is=1.0; Rough Cat B; Partially Exp.; Ce=1.0; Cs=1.00; Ct=1.10
3) Unbalanced snow loads have been considered for this design.
4) This truss has been designed for greater of min roof live load of 12.0 psf or 1.00 times flat roof load of 7.7 psf on overhangs non-concurrent with other live loads.
5) Building Designer/Project engineer responsible for verifying Rain Load = 5.0 (psf) covers rain loading requirements specific to the use of this truss component.
6) This truss has been designed for a 10.0 psf bottom chord live load nonconcurrent with any other live loads.
7) * This truss has been designed for a live load of 20.0psf on the bottom chord in all areas where a rectangle 3-06-00 tall by 2-00-00 wide will fit between the bottom chord and any other members.
8) Refer to girder(s) for truss to truss connections.
9) Provide mechanical connection (by others) of truss to bearing plate capable of withstanding 83 lb uplift at joint 2, 6 lb uplift at joint 4 and 6 lb uplift at joint 3.
10) This truss is designed in accordance with the 2018 International Residential Code sections R502.11.1 and R802.10.2 and referenced standard ANSI/TPI 1.

LOAD CASE(S) Standard

July 17,2025

WARNING - Verify design parameters and READ NOTES ON THIS AND INCLUDED MITEK REFERENCE PAGE MII-7473 rev. 1/2/2023 BEFORE USE.
Design valid for use only with MiTek® connectors. This design is based only upon parameters shown, and is for an individual building component, not a truss system. Before use, the building designer must verify the applicability of design parameters and properly incorporate this design into the overall building design. Bracing indicated is to prevent buckling of individual truss web and/or chord members only. Additional temporary and permanent bracing is always required for stability and to prevent collapse with possible personal injury and property damage. For general guidance regarding the fabrication, storage, delivery, erection and bracing of trusses and truss systems, see **ANSI/TPI1 Quality Criteria and DSB-22** available from Truss Plate Institute (www.tpinst.org) and **BCSI Building Component Safety Information** available from the Structural Building Component Association (www.sbcacomponents.com)

ENGINEERING BY TRENCO A MiTek Affiliate
818 Soundside Road
Edenton, NC 27932

Job	Truss	Truss Type	Qty	Ply	914 Serenity
P05928-31416	J02	Jack-Open	8	1	I74944977 Job Reference (optional)

84 Lumber-2383 (Dunn, NC), Dunn, NC - 28334, Run: 8.83 S Jun 11 2025 Print: 8.830 S Jun 11 2025 MiTek Industries, Inc. Wed Jul 16 10:26:39 Page: 1
ID:3zjpp5t30P7uPc0sXPBTWdzxXRH-RfC?PsB70Hq3NSgPqnL8w3uITXbGKWrCDoi7J4zJC?f

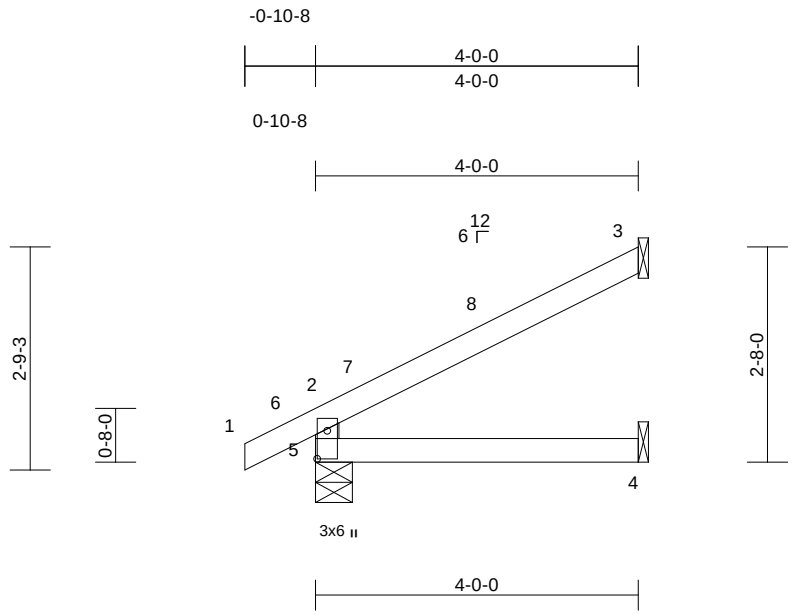

Scale = 1:28.5

Plate Offsets (X, Y): [5:0-4-3,0-1-8]

Loading	(psf)	Spacing	2-0-0	CSI		DEFL	in	(loc)	l/defl	L/d	PLATES	GRIP
TCLL (roof)	20.0	Plate Grip DOL	1.15	TC	0.21	Vert(LL)	0.01	4-5	>999	240	MT20	244/190
Snow (Pf/Pg)	7.7/10.0	Lumber DOL	1.15	BC	0.15	Vert(CT)	-0.02	4-5	>999	180		
TCDL	10.0	Rep Stress Incr	YES	WB	0.00	Horz(CT)	0.01	3	n/a	n/a		
BCLL	0.0*	Code	IRC2018/TPI2014	Matrix-MR								
BCDL	10.0										Weight: 15 lb	FT = 20%

LUMBER
TOP CHORD 2x4 SP No.2
BOT CHORD 2x4 SP No.2
WEBS 2x4 SP No.2

BRACING
TOP CHORD Structural wood sheathing directly applied or 4-0-0 oc purlins, except end verticals.
BOT CHORD Rigid ceiling directly applied or 10-0-0 oc bracing.

REACTIONS (size) 3= Mechanical, 4= Mechanical, 5=0-5-8
Max Horiz 5=63 (LC 16)
Max Uplift 3=-41 (LC 16), 5=-15 (LC 16)
Max Grav 3=100 (LC 2), 4=71 (LC 7), 5=221 (LC 2)

FORCES (lb) - Maximum Compression/Maximum Tension
TOP CHORD 1-2=0/27, 2-3=-62/35, 2-5=-189/103
BOT CHORD 4-5=0/0

NOTES
1) Unbalanced roof live loads have been considered for this design.
2) Wind: ASCE 7-16; Vult=115mph (3-second gust) Vasd=91mph; TCDL=6.0psf; BCDL=3.0psf; h=25ft; Cat. II; Exp B; Enclosed; MWFRS (envelope) exterior zone and C-C Exterior(2E) -0-10-8 to 2-1-8, Interior (1) 2-1-8 to 3-11-4 zone; cantilever left and right exposed ; end vertical left and right exposed;C-C for members and forces & MWFRS for reactions shown; Lumber DOL=1.60 plate grip DOL=1.60
3) TCLL: ASCE 7-16; Pr=20.0 psf (roof LL: Lum DOL=1.15 Plate DOL=1.15); Pg=10.0 psf; Pf=7.7 psf (Lum DOL = 1.15 Plate DOL = 1.15); Is=1.0; Rough Cat B; Partially Exp.; Ce=1.0; Cs=1.00; Ct=1.10
4) Unbalanced snow loads have been considered for this design.
5) This truss has been designed for greater of min roof live load of 12.0 psf or 1.00 times flat roof load of 7.7 psf on overhangs non-concurrent with other live loads.
6) Building Designer/Project engineer responsible for verifying Rain Load = 5.0 (psf) covers rain loading requirements specific to the use of this truss component.
7) This truss has been designed for a 10.0 psf bottom chord live load nonconcurrent with any other live loads.
8) * This truss has been designed for a live load of 20.0psf on the bottom chord in all areas where a rectangle 3-06-00 tall by 2-00-00 wide will fit between the bottom chord and any other members.
9) Refer to girder(s) for truss to truss connections.
10) Provide mechanical connection (by others) of truss to bearing plate capable of withstanding 41 lb uplift at joint 3 and 15 lb uplift at joint 5.
11) This truss is designed in accordance with the 2018 International Residential Code sections R502.11.1 and R802.10.2 and referenced standard ANSI/TPI 1.

LOAD CASE(S) Standard

July 17,2025

WARNING - Verify design parameters and READ NOTES ON THIS AND INCLUDED MITEK REFERENCE PAGE MII-7473 rev. 1/2/2023 BEFORE USE.
Design valid for use only with MiTek® connectors. This design is based only upon parameters shown, and is for an individual building component, not a truss system. Before use, the building designer must verify the applicability of design parameters and properly incorporate this design into the overall building design. Bracing indicated is to prevent buckling of individual truss web and/or chord members only. Additional temporary and permanent bracing is always required for stability and to prevent collapse with possible personal injury and property damage. For general guidance regarding the fabrication, storage, delivery, erection and bracing of trusses and truss systems, see **ANSI/TPI1 Quality Criteria and DSB-22** available from Truss Plate Institute (www.tpinst.org) and **BCSI Building Component Safety Information** available from the Structural Building Component Association (www.sbcacomponents.com)

ENGINEERING BY TRENCO A MiTek Affiliate
818 Soundside Road
Edenton, NC 27932

Job	Truss	Truss Type	Qty	Ply	914 Serenity
P05928-31416	J03	Half Hip Girder	1	1	I74944978 Job Reference (optional)

84 Lumber-2383 (Dunn, NC), Dunn, NC - 28334,

Run: 8.83 S Jun 11 2025 Print: 8.830 S Jun 11 2025 MiTek Industries, Inc. Wed Jul 16 10:26:40 Page: 1
ID:muJbwW?KfTNUc9nn7VNpwkzxXR7-RfC?PsB70Hq3NSgPqnL8w3uITXbGKWrCDoi7J4zJC?f

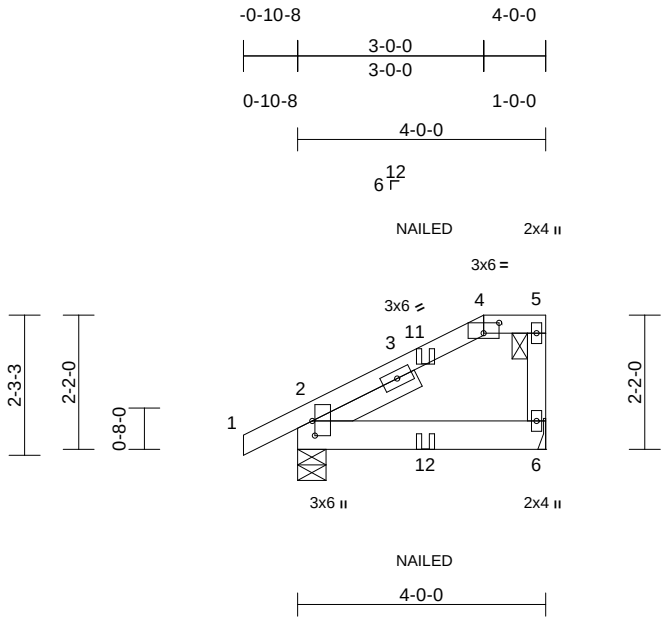

Scale = 1:37.2

Plate Offsets (X, Y): [2:0-2-13,0-0-8], [4:0-3-0,0-2-0]

Loading	(psf)	Spacing	2-0-0	CSI		DEFL	in	(loc)	l/defl	L/d	PLATES	GRIP
TCLL (roof)	20.0	Plate Grip DOL	1.15	TC	0.34	Vert(LL)	-0.01	6-9	>999	240	MT20	244/190
Snow (Pf/Pg)	12.7/10.0	Lumber DOL	1.15	BC	0.27	Vert(CT)	-0.02	6-9	>999	180		
TCDL	10.0	Rep Stress Incr	NO	WB	0.00	Horz(CT)	0.01	2	n/a	n/a		
BCLL	0.0*	Code	IRC2018/TPI2014	Matrix-MP								
BCDL	10.0										Weight: 22 lb	FT = 20%

LUMBER

TOP CHORD	2x4 SP No.2
BOT CHORD	2x6 SP No.2
WEBS	2x4 SP No.2
SLIDER	Left 2x4 SP No.2 -- 1-10-1

BRACING

TOP CHORD	Structural wood sheathing directly applied or 4-0-0 oc purlins, except 2-0-0 oc purlins: 4-5.
BOT CHORD	Rigid ceiling directly applied or 10-0-0 oc bracing.

REACTIONS (size) 2=0-5-8, 6= Mechanical
Max Horiz 2=54 (LC 12)
Max Uplift 2=-25 (LC 12), 6=-23 (LC 12)
Max Grav 2=229 (LC 34), 6=135 (LC 2)

FORCES (lb) - Maximum Compression/Maximum Tension
TOP CHORD 1-2=0/31, 2-4=-189/505, 4-5=0/0
BOT CHORD 2-6=0/0
WEBS 5-6=-27/7

NOTES

1) Unbalanced roof live loads have been considered for this design.
2) Wind: ASCE 7-16; Vult=115mph (3-second gust) Vasd=91mph; TCDL=6.0psf; BCDL=3.0psf; h=25ft; Cat. II; Exp B; Enclosed; MWFRS (envelope) exterior zone; cantilever left and right exposed ; end vertical left exposed; Lumber DOL=1.60 plate grip DOL=1.60
3) TCLL: ASCE 7-16; Pr=20.0 psf (roof LL: Lum DOL=1.15 Plate DOL=1.15); Pg=10.0 psf; Pf=12.7 psf (Lum DOL = 1.15 Plate DOL = 1.15); Is=1.0; Rough Cat B; Partially Exp.; Ce=1.0; Cs=1.00; Ct=1.10, Lu=50-0-0
4) Unbalanced snow loads have been considered for this design.
5) This truss has been designed for greater of min roof live load of 12.0 psf or 1.00 times flat roof load of 7.7 psf on overhangs non-concurrent with other live loads.
6) Building Designer/Project engineer responsible for verifying Rain Load = 5.0 (psf) covers rain loading requirements specific to the use of this truss component.
7) Provide adequate drainage to prevent water ponding.
8) This truss has been designed for a 10.0 psf bottom chord live load nonconcurrent with any other live loads.
9) * This truss has been designed for a live load of 20.0psf on the bottom chord in all areas where a rectangle 3-06-00 tall by 2-00-00 wide will fit between the bottom chord and any other members.
10) Refer to girder(s) for truss to truss connections.
11) Provide mechanical connection (by others) of truss to bearing plate capable of withstanding 25 lb uplift at joint 2 and 23 lb uplift at joint 6.
12) This truss is designed in accordance with the 2018 International Residential Code sections R502.11.1 and R802.10.2 and referenced standard ANSI/TPI 1.
13) Graphical purlin representation does not depict the size or the orientation of the purlin along the top and/or bottom chord.
14) "NAILED" indicates 3-10d (0.148"x3") or 3-12d (0.148"x3.25") toe-nails per NDS guidlines.
15) In the LOAD CASE(S) section, loads applied to the face of the truss are noted as front (F) or back (B).

LOAD CASE(S) Standard

1) Dead + Snow (balanced): Lumber Increase=1.15, Plate Increase=1.15
   Uniform Loads (lb/ft)
   Vert: 1-4=-35, 4-5=-45, 6-7=-20
   Concentrated Loads (lb)
   Vert: 11=-12 (B), 12=-1 (B)

July 17,2025

WARNING - Verify design parameters and READ NOTES ON THIS AND INCLUDED MITEK REFERENCE PAGE MII-7473 rev. 1/2/2023 BEFORE USE.
Design valid for use only with MiTek® connectors. This design is based only upon parameters shown, and is for an individual building component, not a truss system. Before use, the building designer must verify the applicability of design parameters and properly incorporate this design into the overall building design. Bracing indicated is to prevent buckling of individual truss web and/or chord members only. Additional temporary and permanent bracing is always required for stability and to prevent collapse with possible personal injury and property damage. For general guidance regarding the fabrication, storage, delivery, erection and bracing of trusses and truss systems, see **ANSI/TPI1 Quality Criteria and DSB-22** available from Truss Plate Institute (www.tpinst.org) and **BCSI Building Component Safety Information** available from the Structural Building Component Association (www.sbcacomponents.com)

ENGINEERING BY TRENCO A MiTek Affiliate
818 Soundside Road
Edenton, NC 27932

Job	Truss	Truss Type	Qty	Ply	914 Serenity
P05928-31416	J04	Jack-Open	1	1	I74944979 Job Reference (optional)

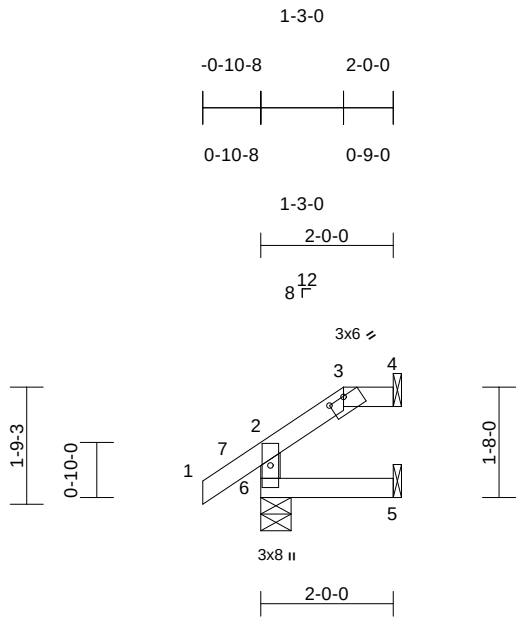

Scale = 1:34.8

Plate Offsets (X, Y): [3:0-3-0,0-0-2]

Loading	(psf)	Spacing	2-0-0	CSI		DEFL	in	(loc)	l/defl	L/d	PLATES	GRIP
TCLL (roof)	20.0	Plate Grip DOL	1.15	TC	0.08	Vert(LL)	0.00	5-6	>999	240	MT20	244/190
Snow (Pf/Pg)	12.7/10.0	Lumber DOL	1.15	BC	0.04	Vert(CT)	0.00	5-6	>999	180		
TCDL	10.0	Rep Stress Incr	YES	WB	0.00	Horz(CT)	0.00	4	n/a	n/a		
BCLL	0.0*	Code	IRC2018/TPI2014	Matrix-MR								
BCDL	10.0										Weight: 9 lb	FT = 20%

LUMBER
TOP CHORD 2x4 SP No.2
BOT CHORD 2x4 SP No.2
WEBS 2x4 SP No.2

BRACING
TOP CHORD Structural wood sheathing directly applied or 2-0-0 oc purlins, except end verticals, and 2-0-0 oc purlins: 3-4.
BOT CHORD Rigid ceiling directly applied or 10-0-0 oc bracing.

REACTIONS (size) 4= Mechanical, 5= Mechanical, 6=0-5-8
Max Horiz 6=33 (LC 16)
Max Uplift 4=-15 (LC 13), 5=-1 (LC 16), 6=-11 (LC 16)
Max Grav 4=42 (LC 37), 5=33 (LC 7), 6=163 (LC 38)

FORCES (lb) - Maximum Compression/Maximum Tension
TOP CHORD 2-6=-141/81, 1-2=0/39, 2-3=-41/5, 3-4=0/0
BOT CHORD 5-6=0/0

NOTES
1) Unbalanced roof live loads have been considered for this design.
2) Wind: ASCE 7-16; Vult=115mph (3-second gust) Vasd=91mph; TCDL=6.0psf; BCDL=3.0psf; h=25ft; Cat. II; Exp B; Enclosed; MWFRS (envelope) exterior zone and C-C Exterior(2E) zone; cantilever left and right exposed ; end vertical left and right exposed;C-C for members and forces & MWFRS for reactions shown; Lumber DOL=1.60 plate grip DOL=1.60
3) TCLL: ASCE 7-16; Pr=20.0 psf (roof LL: Lum DOL=1.15 Plate DOL=1.15); Pg=10.0 psf; Pf=12.7 psf (Lum DOL = 1.15 Plate DOL = 1.15); Is=1.0; Rough Cat B; Partially Exp.; Ce=1.0; Cs=1.00; Ct=1.10, Lu=50-0-0
4) Unbalanced snow loads have been considered for this design.
5) This truss has been designed for greater of min roof live load of 12.0 psf or 1.00 times flat roof load of 7.7 psf on overhangs non-concurrent with other live loads.
6) Building Designer/Project engineer responsible for verifying Rain Load = 5.0 (psf) covers rain loading requirements specific to the use of this truss component.
7) Provide adequate drainage to prevent water ponding.
8) This truss has been designed for a 10.0 psf bottom chord live load nonconcurrent with any other live loads.
9) * This truss has been designed for a live load of 20.0psf on the bottom chord in all areas where a rectangle 3-06-00 tall by 2-00-00 wide will fit between the bottom chord and any other members.
10) Refer to girder(s) for truss to truss connections.
11) Provide mechanical connection (by others) of truss to bearing plate capable of withstanding 11 lb uplift at joint 6, 15 lb uplift at joint 4 and 1 lb uplift at joint 5.
12) This truss is designed in accordance with the 2018 International Residential Code sections R502.11.1 and R802.10.2 and referenced standard ANSI/TPI 1.
13) Graphical purlin representation does not depict the size or the orientation of the purlin along the top and/or bottom chord.

LOAD CASE(S) Standard

July 17,2025

WARNING - Verify design parameters and READ NOTES ON THIS AND INCLUDED MITEK REFERENCE PAGE MII-7473 rev. 1/2/2023 BEFORE USE.
Design valid for use only with MiTek® connectors. This design is based only upon parameters shown, and is for an individual building component, not a truss system. Before use, the building designer must verify the applicability of design parameters and properly incorporate this design into the overall building design. Bracing indicated is to prevent buckling of individual truss web and/or chord members only. Additional temporary and permanent bracing is always required for stability and to prevent collapse with possible personal injury and property damage. For general guidance regarding the fabrication, storage, delivery, erection and bracing of trusses and truss systems, see **ANSI/TPI1 Quality Criteria and DSB-22** available from Truss Plate Institute (www.tpinst.org) and **BCSI Building Component Safety Information** available from the Structural Building Component Association (www.sbcacomponents.com)

ENGINEERING BY TRENCO A MiTek Affiliate
818 Soundside Road
Edenton, NC 27932

Job	Truss	Truss Type	Qty	Ply	914 Serenity
P05928-31416	P01E	Common Supported Gable	1	1	I74944980 Job Reference (optional)

84 Lumber-2383 (Dunn, NC), Dunn, NC - 28334, Run: 8.83 S Jun 11 2025 Print: 8.830 S Jun 11 2025 MiTek Industries, Inc. Wed Jul 16 10:26:40 Page: 1
ID:mSJQQ5HG4b8UbEwavxtPDezx8EA-RfC?PsB70Hq3NSgPqnL8w3uITXbGKWrCDoi7J4zJC?f

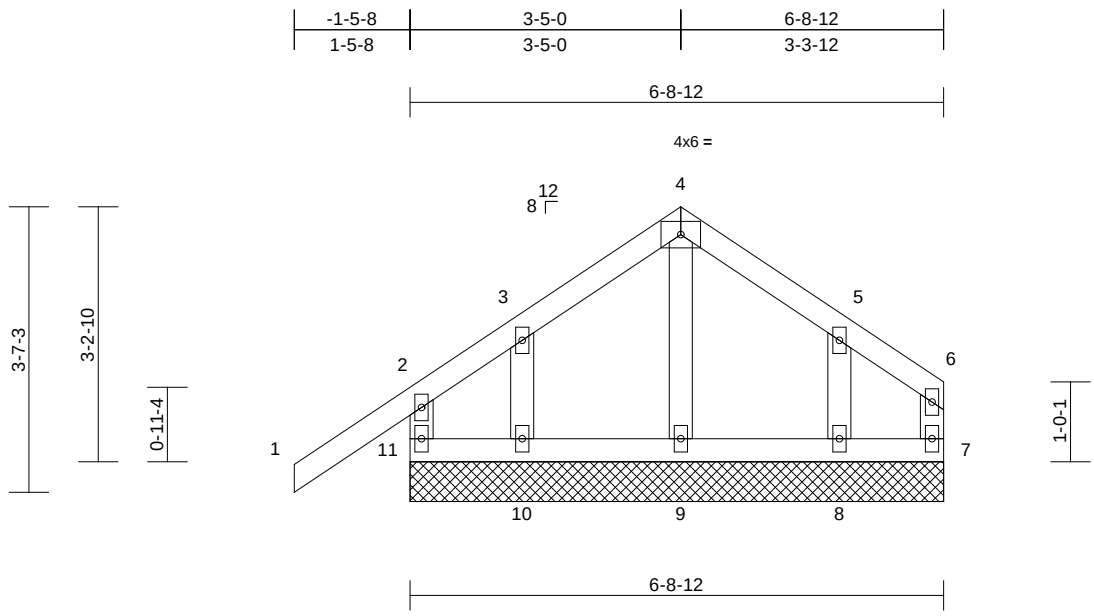

Scale = 1:29.1

Loading	(psf)	Spacing	2-0-0	CSI		DEFL	in	(loc)	l/defl	L/d	PLATES	GRIP
TCLL (roof)	20.0	Plate Grip DOL	1.15	TC	0.22	Vert(LL)	n/a	-	n/a	999	MT20	244/190
Snow (Pf/Pg)	7.7/10.0	Lumber DOL	1.15	BC	0.04	Vert(CT)	n/a	-	n/a	999		
TCDL	10.0	Rep Stress Incr	NO	WB	0.02	Horz(CT)	0.00	7	n/a	n/a		
BCLL	0.0*	Code	IRC2018/TPI2014	Matrix-MR								
BCDL	10.0										Weight: 35 lb	FT = 20%

LUMBER
TOP CHORD 2x4 SP No.2
BOT CHORD 2x4 SP No.2
WEBS 2x4 SP No.2
OTHERS 2x4 SP No.2

BRACING
TOP CHORD Structural wood sheathing directly applied or 6-0-0 oc purlins, except end verticals.
BOT CHORD Rigid ceiling directly applied or 6-0-0 oc bracing.

REACTIONS (size) 7=6-8-12, 8=6-8-12, 9=6-8-12, 10=6-8-12, 11=6-8-12
Max Horiz 11=73 (LC 11)
Max Uplift 7=-20 (LC 11), 8=-56 (LC 15), 10=-47 (LC 14), 11=-19 (LC 14)
Max Grav 7=34 (LC 12), 8=204 (LC 27), 9=203 (LC 2), 10=120 (LC 26), 11=180 (LC 2)

FORCES (lb) - Maximum Compression/Maximum Tension
TOP CHORD 1-2=0/53, 2-3=-45/58, 3-4=-47/99, 4-5=-46/95, 5-6=-18/50, 6-7=-16/14, 2-11=-161/188
BOT CHORD 10-11=-31/39, 9-10=-31/39, 8-9=-31/39, 7-8=-31/39
WEBS 4-9=-137/0, 3-10=-108/73, 5-8=-127/140

NOTES
1) Unbalanced roof live loads have been considered for this design.
2) Wind: ASCE 7-16; Vult=115mph (3-second gust) Vasd=91mph; TCDL=6.0psf; BCDL=3.0psf; h=25ft; Cat. II; Exp B; Enclosed; MWFRS (envelope) exterior zone and C-C Corner(3E) -1-5-8 to 1-5-0, Exterior(2N) 1-5-0 to 3-5-0, Corner(3E) 3-5-0 to 6-7-0 zone; cantilever left and right exposed ; end vertical left and right exposed;C-C for members and forces & MWFRS for reactions shown; Lumber DOL=1.60 plate grip DOL=1.60
3) Truss designed for wind loads in the plane of the truss only. For studs exposed to wind (normal to the face), see Standard Industry Gable End Details as applicable, or consult qualified building designer as per ANSI/TPI 1.
4) TCLL: ASCE 7-16; Pr=20.0 psf (roof LL: Lum DOL=1.15 Plate DOL=1.15); Pg=10.0 psf; Pf=7.7 psf (Lum DOL = 1.15 Plate DOL = 1.15); Is=1.0; Rough Cat B; Partially Exp.; Ce=1.0; Cs=1.00; Ct=1.10
5) This truss has been designed for greater of min roof live load of 12.0 psf or 1.00 times flat roof load of 7.7 psf on overhangs non-concurrent with other live loads.
6) Building Designer/Project engineer responsible for verifying Rain Load = 5.0 (psf) covers rain loading requirements specific to the use of this truss component.
7) All plates are 2x4 (||) MT20 unless otherwise indicated.
8) Truss to be fully sheathed from one face or securely braced against lateral movement (i.e. diagonal web).
9) Gable studs spaced at 2-0-0 oc.
10) This truss has been designed for a 10.0 psf bottom chord live load nonconcurrent with any other live loads.
11) * This truss has been designed for a live load of 20.0psf on the bottom chord in all areas where a rectangle 3-06-00 tall by 2-00-00 wide will fit between the bottom chord and any other members.
12) Provide mechanical connection (by others) of truss to bearing plate capable of withstanding 19 lb uplift at joint 11, 20 lb uplift at joint 7, 47 lb uplift at joint 10 and 56 lb uplift at joint 8.
13) Non Standard bearing condition. Review required.
14) This truss is designed in accordance with the 2018 International Residential Code sections R502.11.1 and R802.10.2 and referenced standard ANSI/TPI 1.
15) In the LOAD CASE(S) section, loads applied to the face of the truss are noted as front (F) or back (B).

LOAD CASE(S) Standard
1) Dead + Snow (balanced): Lumber Increase=1.15, Plate Increase=1.15
Uniform Loads (lb/ft)
Vert: 1-2=-35, 2-4=-35, 4-6=-35
Trapezoidal Loads (lb/ft)
Vert: 11=-20-to-10=-23 (F=-3), 10=-23 (F=-3)-to-9=-28 (F=-8), 9=-28 (F=-8)-to-8=-32 (F=-12), 8=-32 (F=-12)-to-7=-35 (F=-15)

July 17,2025

WARNING - Verify design parameters and READ NOTES ON THIS AND INCLUDED MITEK REFERENCE PAGE MII-7473 rev. 1/2/2023 BEFORE USE.
Design valid for use only with MiTek® connectors. This design is based only upon parameters shown, and is for an individual building component, not a truss system. Before use, the building designer must verify the applicability of design parameters and properly incorporate this design into the overall building design. Bracing indicated is to prevent buckling of individual truss web and/or chord members only. Additional temporary and permanent bracing is always required for stability and to prevent collapse with possible personal injury and property damage. For general guidance regarding the fabrication, storage, delivery, erection and bracing of trusses and truss systems, see **ANSI/TPI1 Quality Criteria and DSB-22** available from Truss Plate Institute (www.tpinst.org) and **BCSI Building Component Safety Information** available from the Structural Building Component Association (www.sbcacomponents.com)

ENGINEERING BY TRENCO A MiTek Affiliate
818 Soundside Road
Edenton, NC 27932

Job	Truss	Truss Type	Qty	Ply	914 Serenity
P05928-31416	P02	Common	2	1	I74944981 Job Reference (optional)

84 Lumber-2383 (Dunn, NC), Dunn, NC - 28334, Run: 8.83 S Jun 11 2025 Print: 8.830 S Jun 11 2025 MiTek Industries, Inc. Wed Jul 16 10:26:41 Page: 1

ID:EftodRIuruGLDOUmTeOemszx8E9-RfC?PsB70Hq3NSgPqnL8w3uITXbGKWrCDoi7J4zJC?f

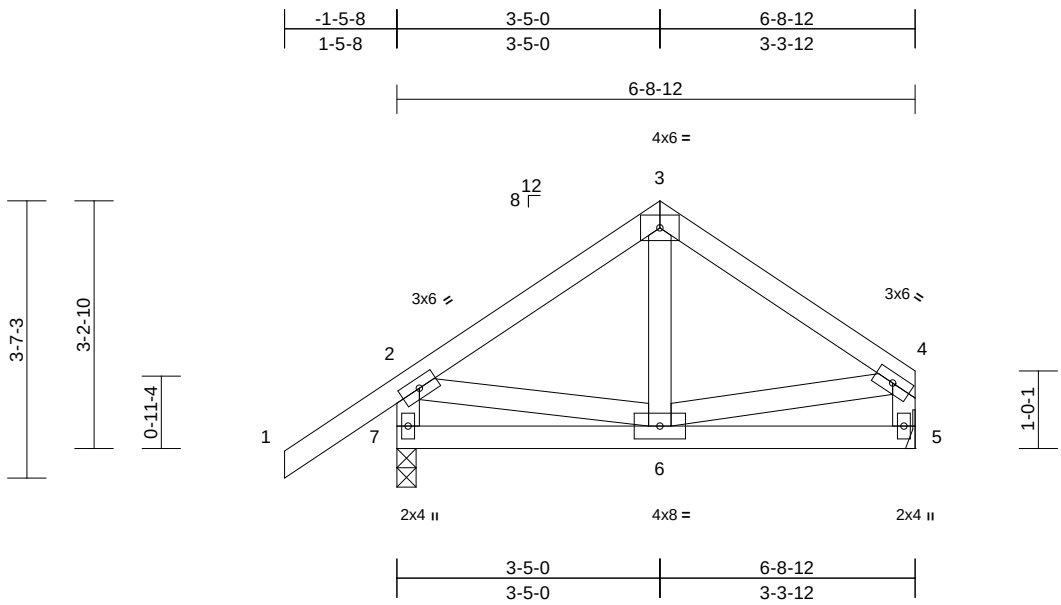

Scale = 1:29.9

Loading	(psf)	Spacing	2-0-0	CSI		DEFL	in	(loc)	l/defl	L/d	PLATES	GRIP
TCLL (roof)	20.0	Plate Grip DOL	1.15	TC	0.19	Vert(LL)	0.00	6-7	>999	240	MT20	244/190
Snow (Pf/Pg)	7.7/10.0	Lumber DOL	1.15	BC	0.10	Vert(CT)	-0.01	6-7	>999	180		
TCDL	10.0	Rep Stress Incr	YES	WB	0.03	Horz(CT)	0.00	5	n/a	n/a		
BCLL	0.0*	Code	IRC2018/TPI2014	Matrix-MP								
BCDL	10.0										Weight: 39 lb	FT = 20%

LUMBER

TOP CHORD 2x4 SP No.2
BOT CHORD 2x4 SP No.2
WEBS 2x4 SP No.2

BRACING

TOP CHORD Structural wood sheathing directly applied or 6-0-0 oc purlins, except end verticals.
BOT CHORD Rigid ceiling directly applied or 10-0-0 oc bracing.

REACTIONS (size) 5= Mechanical, 7=0-3-0
Max Horiz 7=73 (LC 11)
Max Uplift 5=-18 (LC 15), 7=-40 (LC 14)
Max Grav 5=246 (LC 2), 7=366 (LC 2)

FORCES (lb) - Maximum Compression/Maximum Tension
TOP CHORD 1-2=0/53, 2-3=-233/135, 3-4=-208/125, 2-7=-340/205, 4-5=-221/126
BOT CHORD 6-7=-70/59, 5-6=-11/12
WEBS 3-6=-56/103, 2-6=-21/144, 4-6=-62/142

NOTES

1) Unbalanced roof live loads have been considered for this design.
2) Wind: ASCE 7-16; Vult=115mph (3-second gust) Vasd=91mph; TCDL=6.0psf; BCDL=3.0psf; h=25ft; Cat. II; Exp B; Enclosed; MWFRS (envelope) exterior zone and C-C Exterior(2E) -1-5-8 to 1-6-8, Interior (1) 1-6-8 to 3-5-0, Exterior(2E) 3-5-0 to 6-7-0 zone; cantilever left and right exposed ; end vertical left and right exposed; porch left and right exposed;C-C for members and forces & MWFRS for reactions shown; Lumber DOL=1.60 plate grip DOL=1.60
3) TCLL: ASCE 7-16; Pr=20.0 psf (roof LL: Lum DOL=1.15 Plate DOL=1.15); Pg=10.0 psf; Pf=7.7 psf (Lum DOL = 1.15 Plate DOL = 1.15); Is=1.0; Rough Cat B; Partially Exp.; Ce=1.0; Cs=1.00; Ct=1.10
4) This truss has been designed for greater of min roof live load of 12.0 psf or 1.00 times flat roof load of 7.7 psf on overhangs non-concurrent with other live loads.
5) Building Designer/Project engineer responsible for verifying Rain Load = 5.0 (psf) covers rain loading requirements specific to the use of this truss component.
6) This truss has been designed for a 10.0 psf bottom chord live load nonconcurrent with any other live loads.
7) * This truss has been designed for a live load of 20.0psf on the bottom chord in all areas where a rectangle 3-06-00 tall by 2-00-00 wide will fit between the bottom chord and any other members.
8) Refer to girder(s) for truss to truss connections.
9) Provide mechanical connection (by others) of truss to bearing plate capable of withstanding 40 lb uplift at joint 7 and 18 lb uplift at joint 5.
10) This truss is designed in accordance with the 2018 International Residential Code sections R502.11.1 and R802.10.2 and referenced standard ANSI/TPI 1.

LOAD CASE(S) Standard

July 17,2025

WARNING - Verify design parameters and READ NOTES ON THIS AND INCLUDED MITEK REFERENCE PAGE MII-7473 rev. 1/2/2023 BEFORE USE.
Design valid for use only with MiTek® connectors. This design is based only upon parameters shown, and is for an individual building component, not a truss system. Before use, the building designer must verify the applicability of design parameters and properly incorporate this design into the overall building design. Bracing indicated is to prevent buckling of individual truss web and/or chord members only. Additional temporary and permanent bracing is always required for stability and to prevent collapse with possible personal injury and property damage. For general guidance regarding the fabrication, storage, delivery, erection and bracing of trusses and truss systems, see **ANSI/TPI1 Quality Criteria and DSB-22** available from Truss Plate Institute (www.tpinst.org) and **BCSI Building Component Safety Information** available from the Structural Building Component Association (www.sbcacomponents.com)

ENGINEERING BY TRENCO A MiTek Affiliate
818 Soundside Road
Edenton, NC 27932

Job	Truss	Truss Type	Qty	Ply	914 Serenity
P05928-31416	P03G	Monopitch Girder	1	1	I74944982 Job Reference (optional)

84 Lumber-2383 (Dunn, NC), Dunn, NC - 28334, Run: 8.83 S Jun 11 2025 Print: 8.830 S Jun 11 2025 MiTek Industries, Inc. Wed Jul 16 10:26:41 Page: 1

ID:?SuFt_bZzaQojEvaQOLVH7zx8Dm-RfC?PsB70Hq3NSgPqnL8w3uITXbGKWrCDoi7J4zJC?f

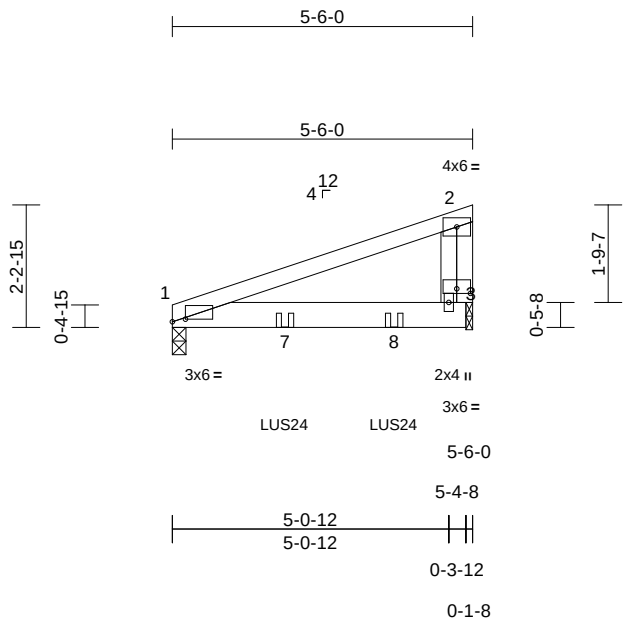

Scale = 1:42.2

Plate Offsets (X, Y): [1:0-2-14,0-0-9], [3:0-3-0,0-1-0]

Loading	(psf)	Spacing	2-0-0	CSI		DEFL	in	(loc)	l/defl	L/d	PLATES	GRIP
TCLL (roof)	20.0	Plate Grip DOL	1.15	TC	0.43	Vert(LL)	-0.04	3-6	>999	240	MT20	244/190
Snow (Pf/Pg)	7.7/10.0	Lumber DOL	1.15	BC	0.62	Vert(CT)	-0.08	3-6	>760	180		
TCDL	10.0	Rep Stress Incr	NO	WB	0.00	Horz(CT)	0.00	1	n/a	n/a		
BCLL	0.0*	Code	IRC2018/TPI2014	Matrix-MP								
BCDL	10.0										Weight: 26 lb	FT = 20%

LUMBER

TOP CHORD 2x4 SP No.2
BOT CHORD 2x6 SP No.2
WEBS 2x4 SP No.2
OTHERS 2x4 SP No.2

BRACING

TOP CHORD Structural wood sheathing directly applied or 5-6-0 oc purlins, except end verticals.
BOT CHORD Rigid ceiling directly applied or 10-0-0 oc bracing.

REACTIONS (size) 1=0-3-0, 3=0-1-8
Max Horiz 1=50 (LC 12)
Max Uplift 1=-64 (LC 8), 3=-84 (LC 8)
Max Grav 1=394 (LC 2), 3=474 (LC 2)

FORCES (lb) - Maximum Compression/Maximum Tension
TOP CHORD 1-2=-196/34, 2-3=-134/38
BOT CHORD 1-3=-43/220

NOTES

1) Unbalanced roof live loads have been considered for this design.
2) Wind: ASCE 7-16; Vult=115mph (3-second gust) Vasd=91mph; TCDL=6.0psf; BCDL=3.0psf; h=25ft; Cat. II; Exp B; Enclosed; MWFRS (envelope) exterior zone; cantilever left and right exposed ; end vertical left exposed; porch left and right exposed; Lumber DOL=1.60 plate grip DOL=1.60
3) TCLL: ASCE 7-16; Pr=20.0 psf (roof LL: Lum DOL=1.15 Plate DOL=1.15); Pg=10.0 psf; Pf=7.7 psf (Lum DOL = 1.15 Plate DOL = 1.15); Is=1.0; Rough Cat B; Partially Exp.; Ce=1.0; Cs=1.00; Ct=1.10
4) Unbalanced snow loads have been considered for this design.
5) Building Designer/Project engineer responsible for verifying Rain Load = 5.0 (psf) covers rain loading requirements specific to the use of this truss component.
6) This truss has been designed for a 10.0 psf bottom chord live load nonconcurrent with any other live loads.
7) * This truss has been designed for a live load of 20.0psf on the bottom chord in all areas where a rectangle 3-06-00 tall by 2-00-00 wide will fit between the bottom chord and any other members.
8) Bearing at joint(s) 3 considers parallel to grain value using ANSI/TPI 1 angle to grain formula. Building designer should verify capacity of bearing surface.
9) Provide mechanical connection (by others) of truss to bearing plate at joint(s) 3.
10) Provide mechanical connection (by others) of truss to bearing plate capable of withstanding 64 lb uplift at joint 1 and 84 lb uplift at joint 3.
11) This truss is designed in accordance with the 2018 International Residential Code sections R502.11.1 and R802.10.2 and referenced standard ANSI/TPI 1.
12) Use Simpson Strong-Tie LUS24 (4-10d Girder, 2-10d Truss, Single Ply Girder) or equivalent spaced at 2-0-0 oc max. starting at 2-0-12 from the left end to 4-0-12 to connect truss(es) to back face of bottom chord.
13) Fill all nail holes where hanger is in contact with lumber.
14) In the LOAD CASE(S) section, loads applied to the face of the truss are noted as front (F) or back (B).

LOAD CASE(S) Standard

1) Dead + Snow (balanced): Lumber Increase=1.15, Plate Increase=1.15
   Uniform Loads (lb/ft)
   Vert: 1-2=-35, 3-4=-20
   Concentrated Loads (lb)
   Vert: 7=-151 (B), 8=-151 (B)

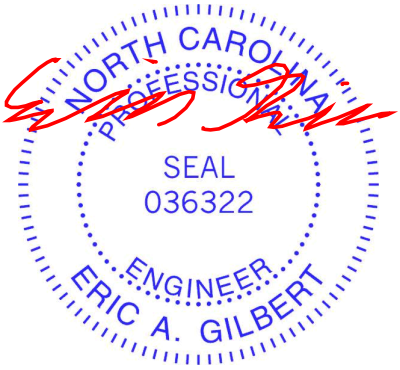

July 17,2025

WARNING - Verify design parameters and READ NOTES ON THIS AND INCLUDED MITEK REFERENCE PAGE MII-7473 rev. 1/2/2023 BEFORE USE.
Design valid for use only with MiTek® connectors. This design is based only upon parameters shown, and is for an individual building component, not a truss system. Before use, the building designer must verify the applicability of design parameters and properly incorporate this design into the overall building design. Bracing indicated is to prevent buckling of individual truss web and/or chord members only. Additional temporary and permanent bracing is always required for stability and to prevent collapse with possible personal injury and property damage. For general guidance regarding the fabrication, storage, delivery, erection and bracing of trusses and truss systems, see **ANSI/TPI1 Quality Criteria and DSB-22** available from Truss Plate Institute (www.tpinst.org) and **BCSI Building Component Safety Information** available from the Structural Building Component Association (www.sbcacomponents.com)

ENGINEERING BY TRENCO A MiTek Affiliate
818 Soundside Road
Edenton, NC 27932

Job	Truss	Truss Type	Qty	Ply	914 Serenity
P05928-31416	P04	Monopitch	3	1	I74944983 Job Reference (optional)

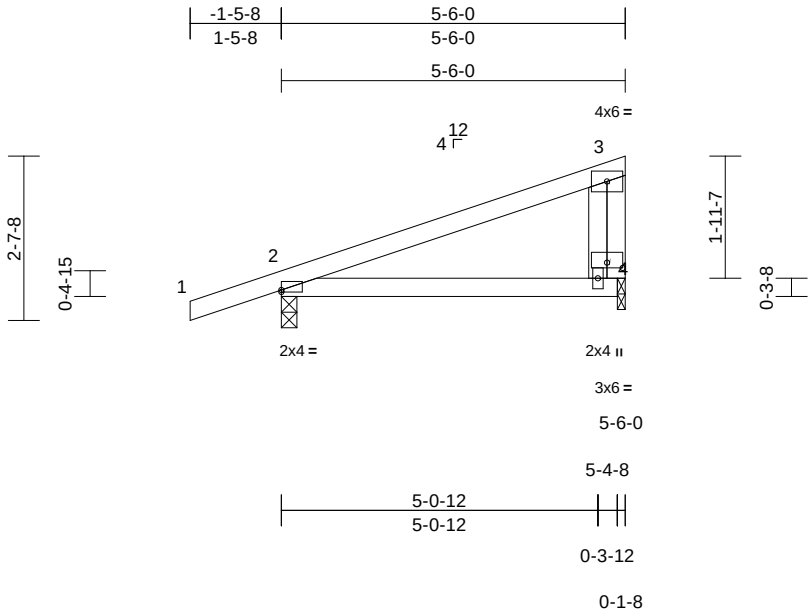

Scale = 1:36.8

Plate Offsets (X, Y): [2:Edge,0-0-6], [4:0-3-0,0-1-0]

Loading	(psf)	Spacing	2-0-0	CSI		DEFL	in	(loc)	l/defl	L/d	PLATES	GRIP
TCLL (roof)	20.0	Plate Grip DOL	1.15	TC	0.38	Vert(LL)	0.05	4-7	>999	240	MT20	244/190
Snow (Pf/Pg)	7.7/10.0	Lumber DOL	1.15	BC	0.27	Vert(CT)	-0.07	4-7	>911	180		
TCDL	10.0	Rep Stress Incr	YES	WB	0.00	Horz(CT)	0.00	2	n/a	n/a		
BCLL	0.0*	Code	IRC2018/TPI2014	Matrix-MP								
BCDL	10.0										Weight: 24 lb	FT = 20%

LUMBER

TOP CHORD	2x4 SP No.2
BOT CHORD	2x4 SP No.2
WEBS	2x4 SP No.2
OTHERS	2x4 SP No.2

BRACING

TOP CHORD	Structural wood sheathing directly applied or 5-6-0 oc purlins, except end verticals.
BOT CHORD	Rigid ceiling directly applied or 10-0-0 oc bracing.

REACTIONS (size) 2=0-3-0, 4=0-1-8
Max Horiz 2=64 (LC 15)
Max Uplift 2=-103 (LC 12), 4=-62 (LC 12)
Max Grav 2=308 (LC 2), 4=196 (LC 2)

FORCES (lb) - Maximum Compression/Maximum Tension
TOP CHORD 1-2=0/28, 2-3=-66/47, 3-4=-133/105
BOT CHORD 2-4=-43/74

NOTES

1) Unbalanced roof live loads have been considered for this design.
2) Wind: ASCE 7-16; Vult=115mph (3-second gust) Vasd=91mph; TCDL=6.0psf; BCDL=3.0psf; h=25ft; Cat. II; Exp B; Enclosed; MWFRS (envelope) exterior zone and C-C Exterior(2E) -1-5-8 to 1-6-8, Interior (1) 1-6-8 to 5-2-8 zone; cantilever left and right exposed ; end vertical left and right exposed; porch left and right exposed;C-C for members and forces & MWFRS for reactions shown; Lumber DOL=1.60 plate grip DOL=1.60
3) TCLL: ASCE 7-16; Pr=20.0 psf (roof LL: Lum DOL=1.15 Plate DOL=1.15); Pg=10.0 psf; Pf=7.7 psf (Lum DOL = 1.15 Plate DOL = 1.15); Is=1.0; Rough Cat B; Partially Exp.; Ce=1.0; Cs=1.00; Ct=1.10
4) Unbalanced snow loads have been considered for this design.
5) This truss has been designed for greater of min roof live load of 12.0 psf or 1.00 times flat roof load of 7.7 psf on overhangs non-concurrent with other live loads.
6) Building Designer/Project engineer responsible for verifying Rain Load = 5.0 (psf) covers rain loading requirements specific to the use of this truss component.
7) This truss has been designed for a 10.0 psf bottom chord live load nonconcurrent with any other live loads.
8) * This truss has been designed for a live load of 20.0psf on the bottom chord in all areas where a rectangle 3-06-00 tall by 2-00-00 wide will fit between the bottom chord and any other members.
9) Bearing at joint(s) 4 considers parallel to grain value using ANSI/TPI 1 angle to grain formula. Building designer should verify capacity of bearing surface.
10) Provide mechanical connection (by others) of truss to bearing plate at joint(s) 4.
11) Provide mechanical connection (by others) of truss to bearing plate capable of withstanding 103 lb uplift at joint 2 and 62 lb uplift at joint 4.
12) This truss is designed in accordance with the 2018 International Residential Code sections R502.11.1 and R802.10.2 and referenced standard ANSI/TPI 1.

LOAD CASE(S) Standard

July 17,2025

WARNING - Verify design parameters and READ NOTES ON THIS AND INCLUDED MITEK REFERENCE PAGE MII-7473 rev. 1/2/2023 BEFORE USE.
Design valid for use only with MiTek® connectors. This design is based only upon parameters shown, and is for an individual building component, not a truss system. Before use, the building designer must verify the applicability of design parameters and properly incorporate this design into the overall building design. Bracing indicated is to prevent buckling of individual truss web and/or chord members only. Additional temporary and permanent bracing is always required for stability and to prevent collapse with possible personal injury and property damage. For general guidance regarding the fabrication, storage, delivery, erection and bracing of trusses and truss systems, see **ANSI/TPI1 Quality Criteria and DSB-22** available from Truss Plate Institute (www.tpinst.org) and **BCSI Building Component Safety Information** available from the Structural Building Component Association (www.sbcacomponents.com)

ENGINEERING BY TRENCO A MiTek Affiliate
818 Soundside Road
Edenton, NC 27932

Job	Truss	Truss Type	Qty	Ply	914 Serenity
P05928-31416	P05	Half Hip	1	1	I74944984 Job Reference (optional)

84 Lumber-2383 (Dunn, NC), Dunn, NC - 28334, Run: 8.83 S Jun 11 2025 Print: 8.830 S Jun 11 2025 MiTek Industries, Inc. Wed Jul 16 10:26:41 Page: 1
ID:KIz7j07Y5h6D6QrXQz5ZKizxCBQ-RfC?PsB70Hq3NSgPqnL8w3uITXbGKWrCDoi7J4zJC?f

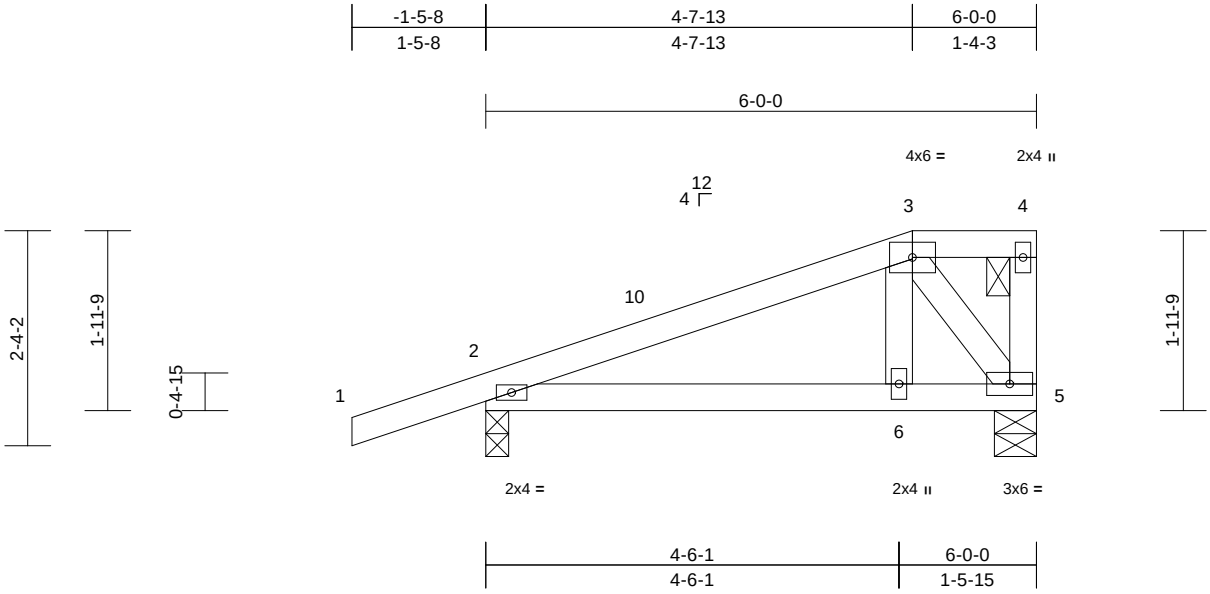

Scale = 1:25.1

Loading	(psf)	Spacing	2-0-0	CSI		DEFL	in	(loc)	l/defl	L/d	PLATES	GRIP
TCLL (roof)	20.0	Plate Grip DOL	1.15	TC	0.26	Vert(LL)	0.02	6-9	>999	240	MT20	244/190
Snow (Pf/Pg)	12.7/10.0	Lumber DOL	1.15	BC	0.21	Vert(CT)	-0.02	6-9	>999	180		
TCDL	10.0	Rep Stress Incr	YES	WB	0.04	Horz(CT)	0.00	2	n/a	n/a		
BCLL	0.0*	Code	IRC2018/TPI2014	Matrix-MP								
BCDL	10.0										Weight: 27 lb	FT = 20%

LUMBER
TOP CHORD 2x4 SP No.2
BOT CHORD 2x4 SP No.2
WEBS 2x4 SP No.2

BRACING
TOP CHORD Structural wood sheathing directly applied or 6-0-0 oc purlins, except end verticals, and 2-0-0 oc purlins: 3-4.
BOT CHORD Rigid ceiling directly applied or 10-0-0 oc bracing.

REACTIONS (size) 2=0-3-0, 5=0-5-8
Max Horiz 2=63 (LC 12)
Max Uplift 2=-108 (LC 12), 5=-73 (LC 12)
Max Grav 2=333 (LC 2), 5=223 (LC 2)

FORCES (lb) - Maximum Compression/Maximum Tension
TOP CHORD 1-2=0/28, 2-3=-219/124, 3-4=0/0, 4-5=-36/22
BOT CHORD 2-6=-148/167, 5-6=-138/156
WEBS 3-6=-121/177, 3-5=-266/236

NOTES
1) Unbalanced roof live loads have been considered for this design.
2) Wind: ASCE 7-16; Vult=115mph (3-second gust) Vasd=91mph; TCDL=6.0psf; BCDL=3.0psf; h=25ft; Cat. II; Exp B; Enclosed; MWFRS (envelope) exterior zone and C-C Exterior(2E) -1-5-8 to 1-6-8, Interior (1) 1-6-8 to 4-7-13, Exterior(2E) 4-7-13 to 5-10-4 zone; cantilever left and right exposed ; end vertical left exposed; porch left and right exposed;C-C for members and forces & MWFRS for reactions shown; Lumber DOL=1.60 plate grip DOL=1.60
3) TCLL: ASCE 7-16; Pr=20.0 psf (roof LL: Lum DOL=1.15 Plate DOL=1.15); Pg=10.0 psf; Pf=12.7 psf (Lum DOL = 1.15 Plate DOL = 1.15); Is=1.0; Rough Cat B; Partially Exp.; Ce=1.0; Cs=1.00; Ct=1.10, Lu=50-0-0
4) Unbalanced snow loads have been considered for this design.
5) This truss has been designed for greater of min roof live load of 12.0 psf or 1.00 times flat roof load of 7.7 psf on overhangs non-concurrent with other live loads.
6) Building Designer/Project engineer responsible for verifying Rain Load = 5.0 (psf) covers rain loading requirements specific to the use of this truss component.
7) Provide adequate drainage to prevent water ponding.
8) This truss has been designed for a 10.0 psf bottom chord live load nonconcurrent with any other live loads.
9) * This truss has been designed for a live load of 20.0psf on the bottom chord in all areas where a rectangle 3-06-00 tall by 2-00-00 wide will fit between the bottom chord and any other members.
10) Provide mechanical connection (by others) of truss to bearing plate capable of withstanding 108 lb uplift at joint 2 and 73 lb uplift at joint 5.
11) This truss is designed in accordance with the 2018 International Residential Code sections R502.11.1 and R802.10.2 and referenced standard ANSI/TPI 1.
12) Graphical purlin representation does not depict the size or the orientation of the purlin along the top and/or bottom chord.

LOAD CASE(S) Standard

July 17,2025

WARNING - Verify design parameters and READ NOTES ON THIS AND INCLUDED MITEK REFERENCE PAGE MII-7473 rev. 1/2/2023 BEFORE USE.
Design valid for use only with MiTek® connectors. This design is based only upon parameters shown, and is for an individual building component, not a truss system. Before use, the building designer must verify the applicability of design parameters and properly incorporate this design into the overall building design. Bracing indicated is to prevent buckling of individual truss web and/or chord members only. Additional temporary and permanent bracing is always required for stability and to prevent collapse with possible personal injury and property damage. For general guidance regarding the fabrication, storage, delivery, erection and bracing of trusses and truss systems, see **ANSI/TPI1 Quality Criteria and DSB-22** available from Truss Plate Institute (www.tpinst.org) and **BCSI Building Component Safety Information** available from the Structural Building Component Association (www.sbcacomponents.com)

ENGINEERING BY TRENCO A MiTek Affiliate
818 Soundside Road
Edenton, NC 27932

Job	Truss	Truss Type	Qty	Ply	914 Serenity
P05928-31416	P06	Half Hip	1	1	I74944985 Job Reference (optional)

84 Lumber-2383 (Dunn, NC), Dunn, NC - 28334, Run: 8.83 S Jun 11 2025 Print: 8.830 S Jun 11 2025 MiTek Industries, Inc. Wed Jul 16 10:26:42 Page: 1
ID:oVXVwM8As_E3kZQj_gcoswzxCBP-RfC?PsB70Hq3NSgPqnL8w3uITXbGKWrCDoi7J4zJC?f

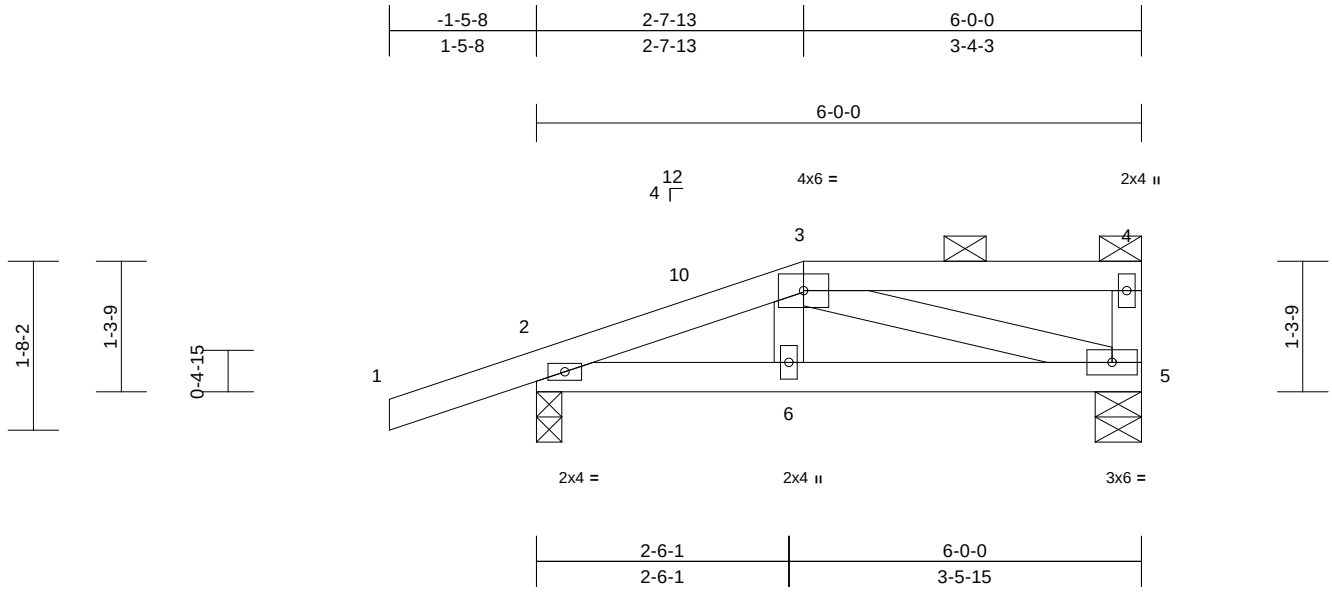

Scale = 1:22.9

Loading	(psf)	Spacing	2-0-0	CSI		DEFL	in	(loc)	l/defl	L/d	PLATES	GRIP
TCLL (roof)	20.0	Plate Grip DOL	1.15	TC	0.20	Vert(LL)	0.01	5-6	>999	240	MT20	244/190
Snow (Pf/Pg)	12.7/10.0	Lumber DOL	1.15	BC	0.15	Vert(CT)	-0.01	5-6	>999	180		
TCDL	10.0	Rep Stress Incr	YES	WB	0.07	Horz(CT)	0.00	5	n/a	n/a		
BCLL	0.0*	Code	IRC2018/TPI2014	Matrix-MP								
BCDL	10.0										Weight: 27 lb	FT = 20%

LUMBER
TOP CHORD 2x4 SP No.2
BOT CHORD 2x4 SP No.2
WEBS 2x4 SP No.2

BRACING
TOP CHORD Structural wood sheathing directly applied or 6-0-0 oc purlins, except end verticals, and 2-0-0 oc purlins: 3-4.
BOT CHORD Rigid ceiling directly applied or 10-0-0 oc bracing.

REACTIONS (size) 2=0-3-0, 5=0-5-8
Max Horiz 2=44 (LC 12)
Max Uplift 2=-112 (LC 12), 5=-69 (LC 12)
Max Grav 2=333 (LC 2), 5=223 (LC 2)

FORCES (lb) - Maximum Compression/Maximum Tension
TOP CHORD 1-2=0/28, 2-3=-354/240, 3-4=0/0, 4-5=-96/57
BOT CHORD 2-6=-242/313, 5-6=-235/305
WEBS 3-6=-53/128, 3-5=-319/246

NOTES
1) Unbalanced roof live loads have been considered for this design.
2) Wind: ASCE 7-16; Vult=115mph (3-second gust) Vasd=91mph; TCDL=6.0psf; BCDL=3.0psf; h=25ft; Cat. II; Exp B; Enclosed; MWFRS (envelope) exterior zone and C-C Exterior(2E) -1-5-8 to 1-6-8, Interior (1) 1-6-8 to 2-7-13, Exterior(2E) 2-7-13 to 5-10-4 zone; cantilever left and right exposed ; end vertical left exposed; porch left and right exposed;C-C for members and forces & MWFRS for reactions shown; Lumber DOL=1.60 plate grip DOL=1.60
3) TCLL: ASCE 7-16; Pr=20.0 psf (roof LL: Lum DOL=1.15 Plate DOL=1.15); Pg=10.0 psf; Pf=12.7 psf (Lum DOL = 1.15 Plate DOL = 1.15); Is=1.0; Rough Cat B; Partially Exp.; Ce=1.0; Cs=1.00; Ct=1.10, Lu=50-0-0
4) Unbalanced snow loads have been considered for this design.
5) This truss has been designed for greater of min roof live load of 12.0 psf or 1.00 times flat roof load of 7.7 psf on overhangs non-concurrent with other live loads.
6) Building Designer/Project engineer responsible for verifying Rain Load = 5.0 (psf) covers rain loading requirements specific to the use of this truss component.
7) Provide adequate drainage to prevent water ponding.
8) This truss has been designed for a 10.0 psf bottom chord live load nonconcurrent with any other live loads.
9) * This truss has been designed for a live load of 20.0psf on the bottom chord in all areas where a rectangle 3-06-00 tall by 2-00-00 wide will fit between the bottom chord and any other members.
10) Provide mechanical connection (by others) of truss to bearing plate capable of withstanding 112 lb uplift at joint 2 and 69 lb uplift at joint 5.
11) This truss is designed in accordance with the 2018 International Residential Code sections R502.11.1 and R802.10.2 and referenced standard ANSI/TPI 1.
12) Graphical purlin representation does not depict the size or the orientation of the purlin along the top and/or bottom chord.

LOAD CASE(S) Standard

July 17,2025

WARNING - Verify design parameters and READ NOTES ON THIS AND INCLUDED MITEK REFERENCE PAGE MII-7473 rev. 1/2/2023 BEFORE USE.
Design valid for use only with MiTek® connectors. This design is based only upon parameters shown, and is for an individual building component, not a truss system. Before use, the building designer must verify the applicability of design parameters and properly incorporate this design into the overall building design. Bracing indicated is to prevent buckling of individual truss web and/or chord members only. Additional temporary and permanent bracing is always required for stability and to prevent collapse with possible personal injury and property damage. For general guidance regarding the fabrication, storage, delivery, erection and bracing of trusses and truss systems, see **ANSI/TPI1 Quality Criteria and DSB-22** available from Truss Plate Institute (www.tpinst.org) and **BCSI Building Component Safety Information** available from the Structural Building Component Association (www.sbcacomponents.com)

ENGINEERING BY TRENCO A MiTek Affiliate
818 Soundside Road
Edenton, NC 27932

Job	Truss	Truss Type	Qty	Ply	914 Serenity
P05928-31416	P07G	Half Hip Girder	1	1	I74944986 Job Reference (optional)

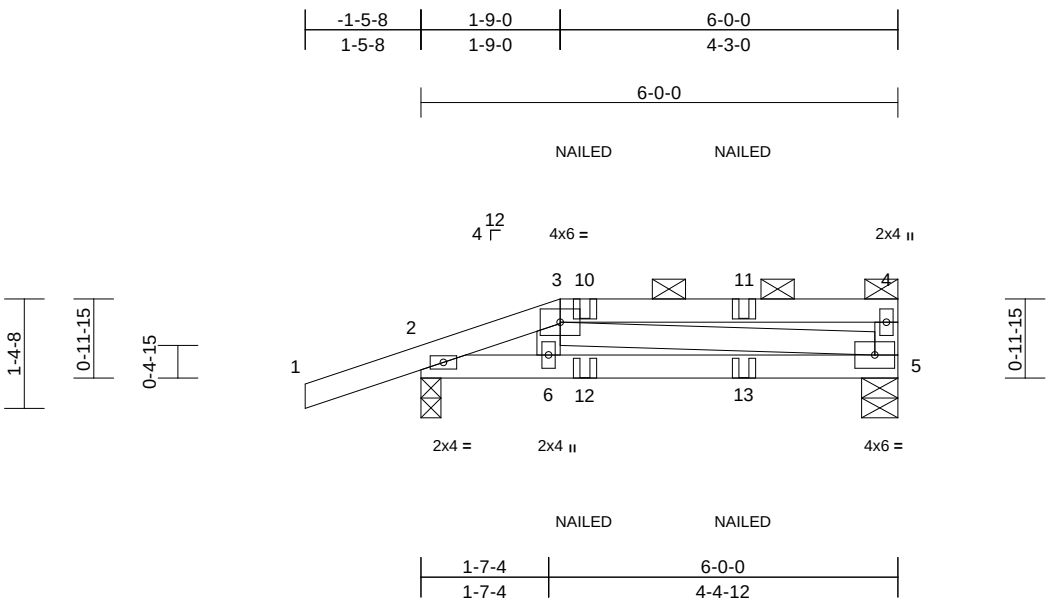

Scale = 1:29

Loading	(psf)	Spacing	2-0-0	CSI		DEFL	in	(loc)	l/defl	L/d	PLATES	GRIP
TCLL (roof)	20.0	Plate Grip DOL	1.15	TC	0.37	Vert(LL)	-0.02	5-6	>999	240	MT20	244/190
Snow (Pf/Pg)	12.7/10.0	Lumber DOL	1.15	BC	0.26	Vert(CT)	-0.03	5-6	>999	180		
TCDL	10.0	Rep Stress Incr	NO	WB	0.11	Horz(CT)	0.00	5	n/a	n/a		
BCLL	0.0*	Code	IRC2018/TPI2014	Matrix-MP								
BCDL	10.0										Weight: 28 lb	FT = 20%

LUMBER
TOP CHORD 2x4 SP No.2
BOT CHORD 2x4 SP No.2
WEBS 2x4 SP No.2

BRACING
TOP CHORD Structural wood sheathing directly applied or 6-0-0 oc purlins, except end verticals, and 2-0-0 oc purlins: 3-4.
BOT CHORD Rigid ceiling directly applied or 10-0-0 oc bracing.

REACTIONS (size) 2=0-3-0, 5=0-5-8
Max Horiz 2=36 (LC 8)
Max Uplift 2=-120 (LC 8), 5=-76 (LC 9)
Max Grav 2=333 (LC 2), 5=223 (LC 2)

FORCES (lb) - Maximum Compression/Maximum Tension
TOP CHORD 1-2=0/28, 2-3=-400/151, 3-4=0/0, 4-5=-123/34
BOT CHORD 2-6=-144/369, 5-6=-136/350
WEBS 3-6=-38/149, 3-5=-355/138

NOTES
1) Unbalanced roof live loads have been considered for this design.
2) Wind: ASCE 7-16; Vult=115mph (3-second gust) Vasd=91mph; TCDL=6.0psf; BCDL=3.0psf; h=25ft; Cat. II; Exp B; Enclosed; MWFRS (envelope) exterior zone; cantilever left and right exposed ; end vertical left exposed; porch left and right exposed; Lumber DOL=1.60 plate grip DOL=1.60
3) TCLL: ASCE 7-16; Pr=20.0 psf (roof LL: Lum DOL=1.15 Plate DOL=1.15); Pg=10.0 psf; Pf=12.7 psf (Lum DOL = 1.15 Plate DOL = 1.15); Is=1.0; Rough Cat B; Partially Exp.; Ce=1.0; Cs=1.00; Ct=1.10, Lu=50-0-0
4) Unbalanced snow loads have been considered for this design.
5) This truss has been designed for greater of min roof live load of 12.0 psf or 1.00 times flat roof load of 7.7 psf on overhangs non-concurrent with other live loads.
6) Building Designer/Project engineer responsible for verifying Rain Load = 5.0 (psf) covers rain loading requirements specific to the use of this truss component.
7) Provide adequate drainage to prevent water ponding.
8) This truss has been designed for a 10.0 psf bottom chord live load nonconcurrent with any other live loads.
9) * This truss has been designed for a live load of 20.0psf on the bottom chord in all areas where a rectangle 3-06-00 tall by 2-00-00 wide will fit between the bottom chord and any other members.
10) Provide mechanical connection (by others) of truss to bearing plate at joint(s) 2.
11) Provide mechanical connection (by others) of truss to bearing plate capable of withstanding 76 lb uplift at joint 5 and 120 lb uplift at joint 2.
12) This truss is designed in accordance with the 2018 International Residential Code sections R502.11.1 and R802.10.2 and referenced standard ANSI/TPI 1.
13) Graphical purlin representation does not depict the size or the orientation of the purlin along the top and/or bottom chord.
14) "NAILED" indicates 3-10d (0.148"x3") or 3-12d (0.148"x3.25") toe-nails per NDS guidlines.
15) In the LOAD CASE(S) section, loads applied to the face of the truss are noted as front (F) or back (B).

LOAD CASE(S) Standard
1) Dead + Snow (balanced): Lumber Increase=1.15, Plate Increase=1.15
Uniform Loads (lb/ft)
Vert: 1-3=-35, 3-4=-45, 5-7=-20
Concentrated Loads (lb)
Vert: 12=1 (F), 13=1 (F)

July 17,2025

WARNING - Verify design parameters and READ NOTES ON THIS AND INCLUDED MITEK REFERENCE PAGE MII-7473 rev. 1/2/2023 BEFORE USE.
Design valid for use only with MiTek® connectors. This design is based only upon parameters shown, and is for an individual building component, not a truss system. Before use, the building designer must verify the applicability of design parameters and properly incorporate this design into the overall building design. Bracing indicated is to prevent buckling of individual truss web and/or chord members only. Additional temporary and permanent bracing is always required for stability and to prevent collapse with possible personal injury and property damage. For general guidance regarding the fabrication, storage, delivery, erection and bracing of trusses and truss systems, see **ANSI/TPI1 Quality Criteria and DSB-22** available from Truss Plate Institute (www.tpinst.org) and **BCSI Building Component Safety Information** available from the Structural Building Component Association (www.sbcacomponents.com)

ENGINEERING BY TRENCO A MiTek Affiliate
818 Soundside Road
Edenton, NC 27932

Job	Truss	Truss Type	Qty	Ply	914 Serenity
P05928-31416	P08	Monopitch	5	1	I74944987 Job Reference (optional)

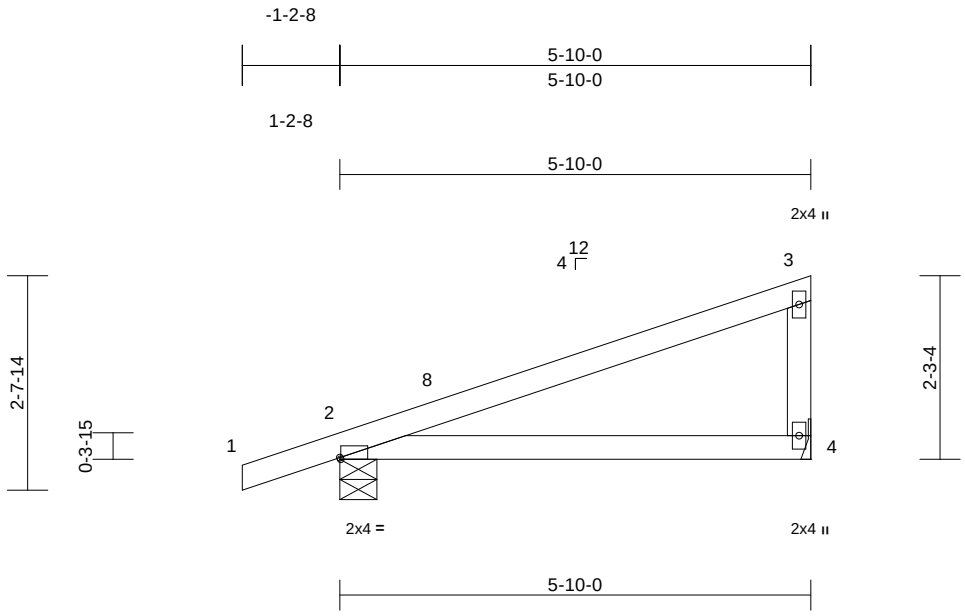

Scale = 1:28.5

Plate Offsets (X, Y): [2:0-0-2,Edge]

Loading	(psf)	Spacing	2-0-0	CSI		DEFL	in	(loc)	l/defl	L/d	PLATES	GRIP
TCLL (roof)	20.0	Plate Grip DOL	1.15	TC	0.46	Vert(LL)	-0.04	4-7	>999	240	MT20	244/190
Snow (Pf/Pg)	7.7/10.0	Lumber DOL	1.15	BC	0.37	Vert(CT)	-0.10	4-7	>654	180		
TCDL	10.0	Rep Stress Incr	YES	WB	0.00	Horz(CT)	0.00	2	n/a	n/a		
BCLL	0.0*	Code	IRC2018/TPI2014	Matrix-MP								
BCDL	10.0										Weight: 22 lb	FT = 20%

LUMBER
TOP CHORD 2x4 SP No.2
BOT CHORD 2x4 SP No.2
WEBS 2x4 SP No.2

BRACING
TOP CHORD Structural wood sheathing directly applied or 5-10-0 oc purlins, except end verticals.
BOT CHORD Rigid ceiling directly applied or 10-0-0 oc bracing.

REACTIONS (size) 2=0-5-8, 4= Mechanical
Max Horiz 2=66 (LC 15)
Max Uplift 2=-62 (LC 12), 4=-33 (LC 16)
Max Grav 2=308 (LC 2), 4=220 (LC 2)

FORCES (lb) - Maximum Compression/Maximum Tension
TOP CHORD 1-2=0/23, 2-3=-94/52, 3-4=-146/103
BOT CHORD 2-4=-49/111

NOTES
1) Unbalanced roof live loads have been considered for this design.
2) Wind: ASCE 7-16; Vult=115mph (3-second gust) Vasd=91mph; TCDL=6.0psf; BCDL=3.0psf; h=25ft; Cat. II; Exp B; Enclosed; MWFRS (envelope) exterior zone and C-C Exterior(2E) -1-2-8 to 1-9-8, Interior (1) 1-9-8 to 5-8-4 zone; cantilever left and right exposed ; end vertical left and right exposed;C-C for members and forces & MWFRS for reactions shown; Lumber DOL=1.60 plate grip DOL=1.60
3) TCLL: ASCE 7-16; Pr=20.0 psf (roof LL: Lum DOL=1.15 Plate DOL=1.15); Pg=10.0 psf; Pf=7.7 psf (Lum DOL = 1.15 Plate DOL = 1.15); Is=1.0; Rough Cat B; Partially Exp.; Ce=1.0; Cs=1.00; Ct=1.10
4) Unbalanced snow loads have been considered for this design.
5) This truss has been designed for greater of min roof live load of 12.0 psf or 1.00 times flat roof load of 7.7 psf on overhangs non-concurrent with other live loads.
6) Building Designer/Project engineer responsible for verifying Rain Load = 5.0 (psf) covers rain loading requirements specific to the use of this truss component.
7) This truss has been designed for a 10.0 psf bottom chord live load nonconcurrent with any other live loads.
8) * This truss has been designed for a live load of 20.0psf on the bottom chord in all areas where a rectangle 3-06-00 tall by 2-00-00 wide will fit between the bottom chord and any other members.
9) Refer to girder(s) for truss to truss connections.
10) Provide mechanical connection (by others) of truss to bearing plate capable of withstanding 33 lb uplift at joint 4 and 62 lb uplift at joint 2.
11) This truss is designed in accordance with the 2018 International Residential Code sections R502.11.1 and R802.10.2 and referenced standard ANSI/TPI 1.

LOAD CASE(S) Standard

July 17,2025

WARNING - Verify design parameters and READ NOTES ON THIS AND INCLUDED MITEK REFERENCE PAGE MII-7473 rev. 1/2/2023 BEFORE USE.
Design valid for use only with MiTek® connectors. This design is based only upon parameters shown, and is for an individual building component, not a truss system. Before use, the building designer must verify the applicability of design parameters and properly incorporate this design into the overall building design. Bracing indicated is to prevent buckling of individual truss web and/or chord members only. Additional temporary and permanent bracing is always required for stability and to prevent collapse with possible personal injury and property damage. For general guidance regarding the fabrication, storage, delivery, erection and bracing of trusses and truss systems, see **ANSI/TPI1 Quality Criteria and DSB-22** available from Truss Plate Institute (www.tpinst.org) and **BCSI Building Component Safety Information** available from the Structural Building Component Association (www.sbcacomponents.com)

ENGINEERING BY TRENCO A MiTek Affiliate
818 Soundside Road
Edenton, NC 27932

Job	Truss	Truss Type	Qty	Ply	914 Serenity
P05928-31416	V01	Valley	1	1	I74944988 Job Reference (optional)

84 Lumber-2383 (Dunn, NC), Dunn, NC - 28334,

Run: 8.83 S Jun 11 2025 Print: 8.830 S Jun 11 2025 MiTek Industries, Inc. Wed Jul 16 10:26:42 Page: 1
ID:A1?Y27J8NWW3Sie9a3Q6rHzx8E7-RfC?PsB70Hq3NSgPqnL8w3uITXbGKWrCDoi7J4zJC?f

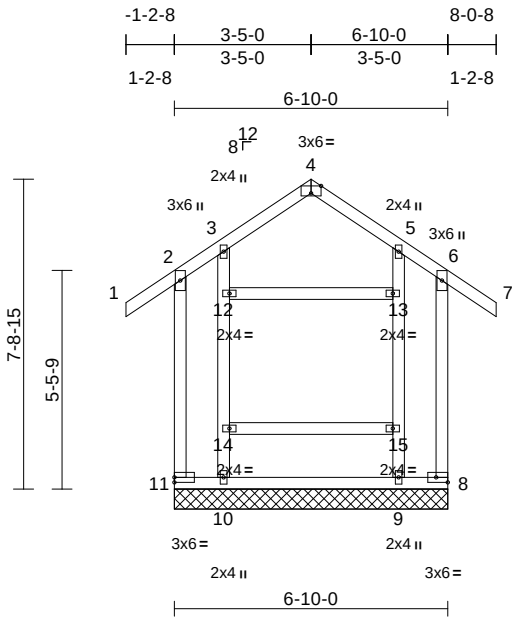

Scale = 1:57.6

Plate Offsets (X, Y): [4:0-3-0,Edge], [8:Edge,0-1-8]

Loading	(psf)	Spacing	2-0-0	CSI		DEFL	in	(loc)	l/defl	L/d	PLATES	GRIP
TCLL (roof)	20.0	Plate Grip DOL	1.15	TC	0.43	Vert(LL)	n/a	-	n/a	999	MT20	244/190
Snow (Pf/Pg)	7.7/10.0	Lumber DOL	1.15	BC	0.31	Vert(CT)	n/a	-	n/a	999		
TCDL	10.0	Rep Stress Incr	YES	WB	0.12	Horz(CT)	0.00	8	n/a	n/a		
BCLL	0.0*	Code	IRC2018/TPI2014	Matrix-MS								
BCDL	10.0										Weight: 71 lb	FT = 20%

LUMBER

TOP CHORD	2x4 SP No.2
BOT CHORD	2x4 SP No.2
WEBS	2x4 SP No.2
OTHERS	2x4 SP No.2

BRACING

TOP CHORD	Structural wood sheathing directly applied or 6-0-0 oc purlins, except end verticals.
BOT CHORD	Rigid ceiling directly applied or 6-0-0 oc bracing.

REACTIONS (size) 8=6-10-0, 9=6-10-0, 10=6-10-0, 11=6-10-0
Max Horiz 11=-197 (LC 12)
Max Uplift 8=-340 (LC 11), 9=-295 (LC 10), 10=-296 (LC 11), 11=-341 (LC 10)
Max Grav 8=360 (LC 12), 9=514 (LC 13), 10=515 (LC 12), 11=361 (LC 13)

FORCES (lb) - Maximum Compression/Maximum Tension

TOP CHORD	2-11=-201/305, 1-2=0/45, 2-3=-127/188, 3-4=-101/102, 4-5=-101/102, 5-6=-127/187, 6-7=0/45, 6-8=-201/304
BOT CHORD	10-11=-117/134, 9-10=-114/140, 8-9=-117/134
WEBS	10-14=-264/132, 12-14=-264/132, 3-12=-264/132, 9-15=-264/132, 13-15=-264/132, 5-13=-264/132, 12-13=0/52, 14-15=-28/0

NOTES

1) Unbalanced roof live loads have been considered for this design.
2) Wind: ASCE 7-16; Vult=115mph (3-second gust) Vasd=91mph; TCDL=6.0psf; BCDL=3.0psf; h=25ft; Cat. II; Exp B; Enclosed; MWFRS (envelope) exterior zone and C-C Exterior(2E) -1-2-8 to 1-9-8, Interior (1) 1-9-8 to 3-5-0, Exterior(2R) 3-5-0 to 6-8-4, Interior (1) 6-8-4 to 8-0-8 zone; cantilever left and right exposed ; end vertical left and right exposed;C-C for members and forces & MWFRS for reactions shown; Lumber DOL=1.60 plate grip DOL=1.60
3) Truss designed for wind loads in the plane of the truss only. For studs exposed to wind (normal to the face), see Standard Industry Gable End Details as applicable, or consult qualified building designer as per ANSI/TPI 1.
4) TCLL: ASCE 7-16; Pr=20.0 psf (roof LL: Lum DOL=1.15 Plate DOL=1.15); Pg=10.0 psf; Pf=7.7 psf (Lum DOL = 1.15 Plate DOL = 1.15); Is=1.0; Rough Cat B; Partially Exp.; Ce=1.0; Cs=1.00; Ct=1.10
5) This truss has been designed for greater of min roof live load of 12.0 psf or 1.00 times flat roof load of 7.7 psf on overhangs non-concurrent with other live loads.
6) Building Designer/Project engineer responsible for verifying Rain Load = 5.0 (psf) covers rain loading requirements specific to the use of this truss component.
7) Gable requires continuous bottom chord bearing.
8) Truss to be fully sheathed from one face or securely braced against lateral movement (i.e. diagonal web).
9) Vertical gable studs spaced at 4-0-0 oc and horizontal gable studs spaced at 3-4-8 oc.
10) This truss has been designed for a 10.0 psf bottom chord live load nonconcurrent with any other live loads.
11) * This truss has been designed for a live load of 20.0psf on the bottom chord in all areas where a rectangle 3-06-00 tall by 2-00-00 wide will fit between the bottom chord and any other members.
12) Provide mechanical connection (by others) of truss to bearing plate capable of withstanding 341 lb uplift at joint 11, 340 lb uplift at joint 8, 296 lb uplift at joint 10 and 295 lb uplift at joint 9.
13) This truss is designed in accordance with the 2018 International Residential Code sections R502.11.1 and R802.10.2 and referenced standard ANSI/TPI 1.

LOAD CASE(S) Standard

July 17,2025

WARNING - Verify design parameters and READ NOTES ON THIS AND INCLUDED MITEK REFERENCE PAGE MII-7473 rev. 1/2/2023 BEFORE USE.
Design valid for use only with MiTek® connectors. This design is based only upon parameters shown, and is for an individual building component, not a truss system. Before use, the building designer must verify the applicability of design parameters and properly incorporate this design into the overall building design. Bracing indicated is to prevent buckling of individual truss web and/or chord members only. Additional temporary and permanent bracing is always required for stability and to prevent collapse with possible personal injury and property damage. For general guidance regarding the fabrication, storage, delivery, erection and bracing of trusses and truss systems, see **ANSI/TPI1 Quality Criteria and DSB-22** available from Truss Plate Institute (www.tpinst.org) and **BCSI Building Component Safety Information** available from the Structural Building Component Association (www.sbcacomponents.com)

ENGINEERING BY TRENCO A MiTek Affiliate
818 Soundside Road
Edenton, NC 27932

Job	Truss	Truss Type	Qty	Ply	914 Serenity
P05928-31416	V02	Valley	1	1	I74944989 Job Reference (optional)

84 Lumber-2383 (Dunn, NC), Dunn, NC - 28334,

Run: 8.83 S Jun 11 2025 Print: 8.830 S Jun 11 2025 MiTek Industries, Inc. Wed Jul 16 10:26:43 Page: 1
ID:A1?Y27J8NWW3Sie9a3Q6rHzx8E7-RfC?PsB70Hq3NSgPqnL8w3uITXbGKWrCDoi7J4zJC?f

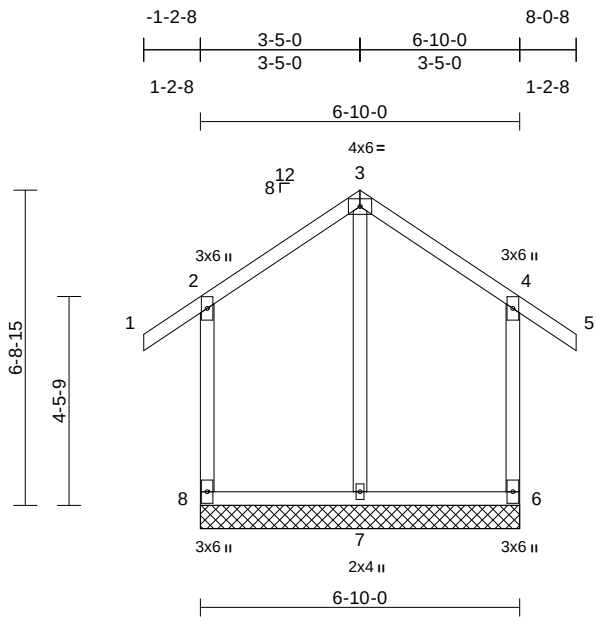

Scale = 1:49.3

Loading	(psf)	Spacing	2-0-0	CSI		DEFL	in	(loc)	l/defl	L/d	PLATES	GRIP
TCLL (roof)	20.0	Plate Grip DOL	1.15	TC	0.27	Vert(LL)	n/a	-	n/a	999	MT20	244/190
Snow (Pf/Pg)	7.7/10.0	Lumber DOL	1.15	BC	0.23	Vert(CT)	n/a	-	n/a	999		
TCDL	10.0	Rep Stress Incr	YES	WB	0.13	Horz(CT)	0.00	6	n/a	n/a		
BCLL	0.0*	Code	IRC2018/TPI2014	Matrix-MR								
BCDL	10.0										Weight: 48 lb	FT = 20%

LUMBER

TOP CHORD	2x4 SP No.2
BOT CHORD	2x4 SP No.2
WEBS	2x4 SP No.2
OTHERS	2x4 SP No.2

BRACING

TOP CHORD	Structural wood sheathing directly applied or 6-0-0 oc purlins, except end verticals.
BOT CHORD	Rigid ceiling directly applied or 10-0-0 oc bracing.

REACTIONS (size) 6=6-10-0, 7=6-10-0, 8=6-10-0
Max Horiz 8=171 (LC 13)
Max Uplift 6=-74 (LC 15), 8=-74 (LC 14)
Max Grav 6=267 (LC 26), 7=337 (LC 3), 8=267 (LC 27)

FORCES (lb) - Maximum Compression/Maximum Tension
TOP CHORD 2-8=-193/208, 1-2=0/45, 2-3=-89/148, 3-4=-89/148, 4-5=0/45, 4-6=-193/208
BOT CHORD 7-8=-97/106, 6-7=-97/106
WEBS 3-7=-174/0

NOTES

1) Unbalanced roof live loads have been considered for this design.
2) Wind: ASCE 7-16; Vult=115mph (3-second gust) Vasd=91mph; TCDL=6.0psf; BCDL=3.0psf; h=25ft; Cat. II; Exp B; Enclosed; MWFRS (envelope) exterior zone and C-C Exterior(2E) -1-2-8 to 1-9-8, Interior (1) 1-9-8 to 3-5-0, Exterior(2R) 3-5-0 to 6-8-4, Interior (1) 6-8-4 to 8-0-8 zone; cantilever left and right exposed ; end vertical left and right exposed;C-C for members and forces & MWFRS for reactions shown; Lumber DOL=1.60 plate grip DOL=1.60
3) Truss designed for wind loads in the plane of the truss only. For studs exposed to wind (normal to the face), see Standard Industry Gable End Details as applicable, or consult qualified building designer as per ANSI/TPI 1.
4) TCLL: ASCE 7-16; Pr=20.0 psf (roof LL: Lum DOL=1.15 Plate DOL=1.15); Pg=10.0 psf; Pf=7.7 psf (Lum DOL = 1.15 Plate DOL = 1.15); Is=1.0; Rough Cat B; Partially Exp.; Ce=1.0; Cs=1.00; Ct=1.10
5) This truss has been designed for greater of min roof live load of 12.0 psf or 1.00 times flat roof load of 7.7 psf on overhangs non-concurrent with other live loads.
6) Building Designer/Project engineer responsible for verifying Rain Load = 5.0 (psf) covers rain loading requirements specific to the use of this truss component.
7) Gable requires continuous bottom chord bearing.
8) Truss to be fully sheathed from one face or securely braced against lateral movement (i.e. diagonal web).
9) Gable studs spaced at 4-0-0 oc.
10) This truss has been designed for a 10.0 psf bottom chord live load nonconcurrent with any other live loads.
11) * This truss has been designed for a live load of 20.0psf on the bottom chord in all areas where a rectangle 3-06-00 tall by 2-00-00 wide will fit between the bottom chord and any other members, with BCDL = 10.0psf.
12) Provide mechanical connection (by others) of truss to bearing plate capable of withstanding 74 lb uplift at joint 8 and 74 lb uplift at joint 6.
13) This truss is designed in accordance with the 2018 International Residential Code sections R502.11.1 and R802.10.2 and referenced standard ANSI/TPI 1.

LOAD CASE(S) Standard

July 17,2025

WARNING - Verify design parameters and READ NOTES ON THIS AND INCLUDED MITEK REFERENCE PAGE MII-7473 rev. 1/2/2023 BEFORE USE.
Design valid for use only with MiTek® connectors. This design is based only upon parameters shown, and is for an individual building component, not a truss system. Before use, the building designer must verify the applicability of design parameters and properly incorporate this design into the overall building design. Bracing indicated is to prevent buckling of individual truss web and/or chord members only. Additional temporary and permanent bracing is always required for stability and to prevent collapse with possible personal injury and property damage. For general guidance regarding the fabrication, storage, delivery, erection and bracing of trusses and truss systems, see **ANSI/TPI1 Quality Criteria and DSB-22** available from Truss Plate Institute (www.tpinst.org) and **BCSI Building Component Safety Information** available from the Structural Building Component Association (www.sbcacomponents.com)

ENGINEERING BY TRENCO A MiTek Affiliate
818 Soundside Road
Edenton, NC 27932

Job	Truss	Truss Type	Qty	Ply	914 Serenity
P05928-31416	V03	Valley	1	1	I74944990 Job Reference (optional)

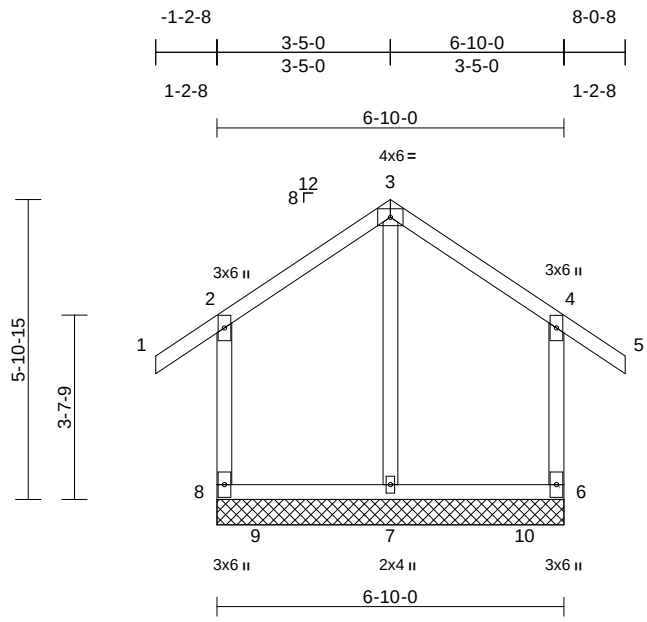

Scale = 1:45.4

Loading	(psf)	Spacing	2-0-0	CSI		DEFL	in	(loc)	l/defl	L/d	PLATES	GRIP
TCLL (roof)	20.0	Plate Grip DOL	1.15	TC	0.19	Vert(LL)	n/a	-	n/a	999	MT20	244/190
Snow (Pf/Pg)	7.7/10.0	Lumber DOL	1.15	BC	0.17	Vert(CT)	n/a	-	n/a	999		
TCDL	10.0	Rep Stress Incr	YES	WB	0.09	Horz(CT)	0.00	6	n/a	n/a		
BCLL	0.0*	Code	IRC2018/TPI2014	Matrix-MR								
BCDL	10.0										Weight: 45 lb	FT = 20%

LUMBER

TOP CHORD	2x4 SP No.2
BOT CHORD	2x4 SP No.2
WEBS	2x4 SP No.2
OTHERS	2x4 SP No.2

BRACING

TOP CHORD	Structural wood sheathing directly applied or 6-0-0 oc purlins, except end verticals.
BOT CHORD	Rigid ceiling directly applied or 10-0-0 oc bracing.

REACTIONS (size) 6=6-10-0, 7=6-10-0, 8=6-10-0
Max Horiz 8=148 (LC 13)
Max Uplift 6=-67 (LC 15), 8=-67 (LC 14)
Max Grav 6=244 (LC 26), 7=332 (LC 3), 8=244 (LC 27)

FORCES (lb) - Maximum Compression/Maximum Tension
TOP CHORD 2-8=-194/197, 1-2=0/45, 2-3=-84/140, 3-4=-84/140, 4-5=0/45, 4-6=-194/196
BOT CHORD 7-8=-82/84, 6-7=-82/84
WEBS 3-7=-172/0

NOTES

1) Unbalanced roof live loads have been considered for this design.
2) Wind: ASCE 7-16; Vult=115mph (3-second gust) Vasd=91mph; TCDL=6.0psf; BCDL=3.0psf; h=25ft; Cat. II; Exp B; Enclosed; MWFRS (envelope) exterior zone and C-C Exterior(2E) -1-2-8 to 1-9-8, Interior (1) 1-9-8 to 3-5-0, Exterior(2R) 3-5-0 to 6-8-4, Interior (1) 6-8-4 to 8-0-8 zone; cantilever left and right exposed ; end vertical left and right exposed;C-C for members and forces & MWFRS for reactions shown; Lumber DOL=1.60 plate grip DOL=1.60
3) Truss designed for wind loads in the plane of the truss only. For studs exposed to wind (normal to the face), see Standard Industry Gable End Details as applicable, or consult qualified building designer as per ANSI/TPI 1.
4) TCLL: ASCE 7-16; Pr=20.0 psf (roof LL: Lum DOL=1.15 Plate DOL=1.15); Pg=10.0 psf; Pf=7.7 psf (Lum DOL = 1.15 Plate DOL = 1.15); Is=1.0; Rough Cat B; Partially Exp.; Ce=1.0; Cs=1.00; Ct=1.10
5) This truss has been designed for greater of min roof live load of 12.0 psf or 1.00 times flat roof load of 7.7 psf on overhangs non-concurrent with other live loads.
6) Building Designer/Project engineer responsible for verifying Rain Load = 5.0 (psf) covers rain loading requirements specific to the use of this truss component.
7) Gable requires continuous bottom chord bearing.
8) Truss to be fully sheathed from one face or securely braced against lateral movement (i.e. diagonal web).
9) Gable studs spaced at 4-0-0 oc.
10) This truss has been designed for a 10.0 psf bottom chord live load nonconcurrent with any other live loads.
11) * This truss has been designed for a live load of 20.0psf on the bottom chord in all areas where a rectangle 3-06-00 tall by 2-00-00 wide will fit between the bottom chord and any other members, with BCDL = 10.0psf.
12) Provide mechanical connection (by others) of truss to bearing plate capable of withstanding 67 lb uplift at joint 8 and 67 lb uplift at joint 6.
13) This truss is designed in accordance with the 2018 International Residential Code sections R502.11.1 and R802.10.2 and referenced standard ANSI/TPI 1.

LOAD CASE(S) Standard

July 17,2025

WARNING - Verify design parameters and READ NOTES ON THIS AND INCLUDED MITEK REFERENCE PAGE MII-7473 rev. 1/2/2023 BEFORE USE.
Design valid for use only with MiTek® connectors. This design is based only upon parameters shown, and is for an individual building component, not a truss system. Before use, the building designer must verify the applicability of design parameters and properly incorporate this design into the overall building design. Bracing indicated is to prevent buckling of individual truss web and/or chord members only. Additional temporary and permanent bracing is always required for stability and to prevent collapse with possible personal injury and property damage. For general guidance regarding the fabrication, storage, delivery, erection and bracing of trusses and truss systems, see **ANSI/TPI1 Quality Criteria and DSB-22** available from Truss Plate Institute (www.tpinst.org) and **BCSI Building Component Safety Information** available from the Structural Building Component Association (www.sbcacomponents.com)

ENGINEERING BY TRENCO A MiTek Affiliate
818 Soundside Road
Edenton, NC 27932

Job	Truss	Truss Type	Qty	Ply	914 Serenity
P05928-31416	V04	Valley	1	1	I74944991 Job Reference (optional)

84 Lumber-2383 (Dunn, NC), Dunn, NC - 28334,

Run: 8.83 S Jun 11 2025 Print: 8.830 S Jun 11 2025 MiTek Industries, Inc. Wed Jul 16 10:26:43 Page: 1
ID:71c5XbODvjjj9YdtNYZl5WzxBi5-RfC?PsB70Hq3NSgPqnL8w3uITXbGKWrCDoi7J4zJC?f

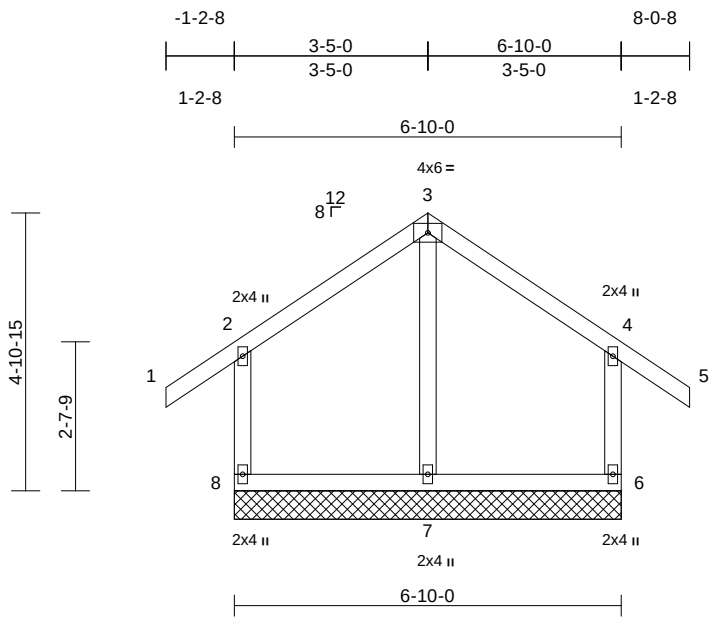

Scale = 1:40.7

Loading	(psf)	Spacing	2-0-0	CSI		DEFL	in	(loc)	l/defl	L/d	PLATES	GRIP
TCLL (roof)	20.0	Plate Grip DOL	1.15	TC	0.14	Vert(LL)	n/a	-	n/a	999	MT20	244/190
Snow (Pf/Pg)	7.7/10.0	Lumber DOL	1.15	BC	0.10	Vert(CT)	n/a	-	n/a	999		
TCDL	10.0	Rep Stress Incr	YES	WB	0.06	Horz(CT)	0.00	6	n/a	n/a		
BCLL	0.0*	Code	IRC2018/TPI2014	Matrix-MR								
BCDL	10.0										Weight: 40 lb	FT = 20%

LUMBER

TOP CHORD	2x4 SP No.2
BOT CHORD	2x4 SP No.2
WEBS	2x4 SP No.2
OTHERS	2x4 SP No.2

BRACING

TOP CHORD	Structural wood sheathing directly applied or 6-0-0 oc purlins, except end verticals.
BOT CHORD	Rigid ceiling directly applied or 10-0-0 oc bracing.

REACTIONS (size) 6=6-10-0, 7=6-10-0, 8=6-10-0
Max Horiz 8=121 (LC 13)
Max Uplift 6=-62 (LC 15), 8=-62 (LC 14)
Max Grav 6=222 (LC 33), 7=245 (LC 2), 8=222 (LC 32)

FORCES (lb) - Maximum Compression/Maximum Tension

TOP CHORD	2-8=-195/186, 1-2=0/45, 2-3=-77/131, 3-4=-77/131, 4-5=0/45, 4-6=-195/185
BOT CHORD	7-8=-64/58, 6-7=-64/58
WEBS	3-7=-169/0

NOTES

1) Unbalanced roof live loads have been considered for this design.
2) Wind: ASCE 7-16; Vult=115mph (3-second gust) Vasd=91mph; TCDL=6.0psf; BCDL=3.0psf; h=25ft; Cat. II; Exp B; Enclosed; MWFRS (envelope) exterior zone and C-C Exterior(2E) -1-2-8 to 1-9-8, Interior (1) 1-9-8 to 3-5-0, Exterior(2R) 3-5-0 to 6-8-4, Interior (1) 6-8-4 to 8-0-8 zone; cantilever left and right exposed ; end vertical left and right exposed;C-C for members and forces & MWFRS for reactions shown; Lumber DOL=1.60 plate grip DOL=1.60
3) Truss designed for wind loads in the plane of the truss only. For studs exposed to wind (normal to the face), see Standard Industry Gable End Details as applicable, or consult qualified building designer as per ANSI/TPI 1.
4) TCLL: ASCE 7-16; Pr=20.0 psf (roof LL: Lum DOL=1.15 Plate DOL=1.15); Pg=10.0 psf; Pf=7.7 psf (Lum DOL = 1.15 Plate DOL = 1.15); Is=1.0; Rough Cat B; Partially Exp.; Ce=1.0; Cs=1.00; Ct=1.10
5) This truss has been designed for greater of min roof live load of 12.0 psf or 1.00 times flat roof load of 7.7 psf on overhangs non-concurrent with other live loads.
6) Building Designer/Project engineer responsible for verifying Rain Load = 5.0 (psf) covers rain loading requirements specific to the use of this truss component.
7) Gable requires continuous bottom chord bearing.
8) Truss to be fully sheathed from one face or securely braced against lateral movement (i.e. diagonal web).
9) Gable studs spaced at 4-0-0 oc.
10) This truss has been designed for a 10.0 psf bottom chord live load nonconcurrent with any other live loads.
11) * This truss has been designed for a live load of 20.0psf on the bottom chord in all areas where a rectangle 3-06-00 tall by 2-00-00 wide will fit between the bottom chord and any other members.
12) Provide mechanical connection (by others) of truss to bearing plate capable of withstanding 62 lb uplift at joint 8 and 62 lb uplift at joint 6.
13) This truss is designed in accordance with the 2018 International Residential Code sections R502.11.1 and R802.10.2 and referenced standard ANSI/TPI 1.

LOAD CASE(S) Standard

July 17,2025

WARNING - Verify design parameters and READ NOTES ON THIS AND INCLUDED MITEK REFERENCE PAGE MII-7473 rev. 1/2/2023 BEFORE USE.
Design valid for use only with MiTek® connectors. This design is based only upon parameters shown, and is for an individual building component, not a truss system. Before use, the building designer must verify the applicability of design parameters and properly incorporate this design into the overall building design. Bracing indicated is to prevent buckling of individual truss web and/or chord members only. Additional temporary and permanent bracing is always required for stability and to prevent collapse with possible personal injury and property damage. For general guidance regarding the fabrication, storage, delivery, erection and bracing of trusses and truss systems, see **ANSI/TPI1 Quality Criteria and DSB-22** available from Truss Plate Institute (www.tpinst.org) and **BCSI Building Component Safety Information** available from the Structural Building Component Association (www.sbcacomponents.com)

ENGINEERING BY TRENCO A MiTek Affiliate
818 Soundside Road
Edenton, NC 27932

Job	Truss	Truss Type	Qty	Ply	914 Serenity
P05928-31416	V05	Valley	1	1	I74944992 Job Reference (optional)

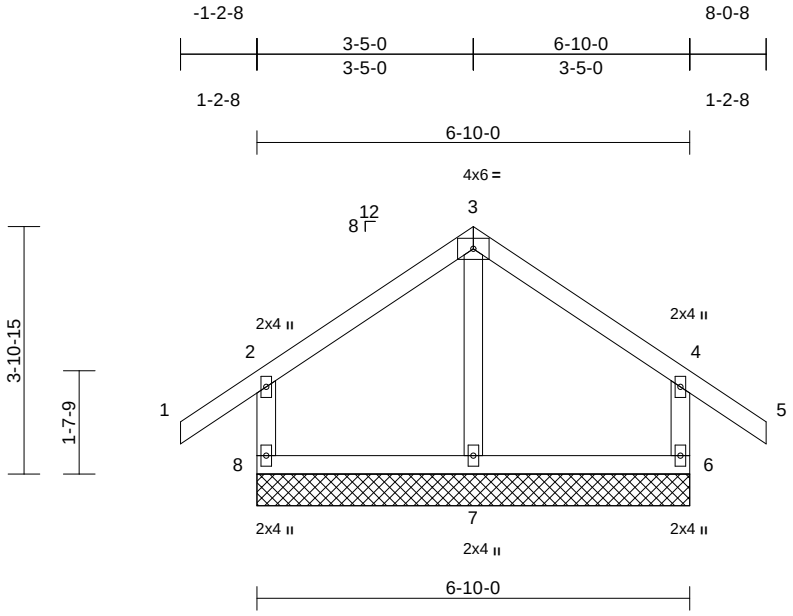

Scale = 1:36.4

Loading	(psf)	Spacing	2-0-0	CSI		DEFL	in	(loc)	l/defl	L/d	PLATES	GRIP
TCLL (roof)	20.0	Plate Grip DOL	1.15	TC	0.13	Vert(LL)	n/a	-	n/a	999	MT20	244/190
Snow (Pf/Pg)	7.7/10.0	Lumber DOL	1.15	BC	0.10	Vert(CT)	n/a	-	n/a	999		
TCDL	10.0	Rep Stress Incr	YES	WB	0.04	Horz(CT)	0.00	6	n/a	n/a		
BCLL	0.0*	Code	IRC2018/TPI2014	Matrix-MR								
BCDL	10.0										Weight: 36 lb	FT = 20%

LUMBER

TOP CHORD	2x4 SP No.2
BOT CHORD	2x4 SP No.2
WEBS	2x4 SP No.2
OTHERS	2x4 SP No.2

BRACING

TOP CHORD	Structural wood sheathing directly applied or 6-0-0 oc purlins, except end verticals.
BOT CHORD	Rigid ceiling directly applied or 10-0-0 oc bracing.

REACTIONS (size) 6=6-10-0, 7=6-10-0, 8=6-10-0
Max Horiz 8=94 (LC 13)
Max Uplift 6=-60 (LC 15), 8=-60 (LC 14)
Max Grav 6=226 (LC 33), 7=236 (LC 2), 8=226 (LC 32)

FORCES (lb) - Maximum Compression/Maximum Tension
TOP CHORD 2-8=-199/177, 1-2=0/45, 2-3=-83/122, 3-4=-83/121, 4-5=0/45, 4-6=-199/176
BOT CHORD 7-8=-42/51, 6-7=-42/51
WEBS 3-7=-160/0

NOTES

1) Unbalanced roof live loads have been considered for this design.
2) Wind: ASCE 7-16; Vult=115mph (3-second gust) Vasd=91mph; TCDL=6.0psf; BCDL=3.0psf; h=25ft; Cat. II; Exp B; Enclosed; MWFRS (envelope) exterior zone and C-C Exterior(2E) -1-2-8 to 1-9-8, Interior (1) 1-9-8 to 3-5-0, Exterior(2R) 3-5-0 to 6-8-4, Interior (1) 6-8-4 to 8-0-8 zone; cantilever left and right exposed ; end vertical left and right exposed;C-C for members and forces & MWFRS for reactions shown; Lumber DOL=1.60 plate grip DOL=1.60
3) Truss designed for wind loads in the plane of the truss only. For studs exposed to wind (normal to the face), see Standard Industry Gable End Details as applicable, or consult qualified building designer as per ANSI/TPI 1.
4) TCLL: ASCE 7-16; Pr=20.0 psf (roof LL: Lum DOL=1.15 Plate DOL=1.15); Pg=10.0 psf; Pf=7.7 psf (Lum DOL = 1.15 Plate DOL = 1.15); Is=1.0; Rough Cat B; Partially Exp.; Ce=1.0; Cs=1.00; Ct=1.10
5) This truss has been designed for greater of min roof live load of 12.0 psf or 1.00 times flat roof load of 7.7 psf on overhangs non-concurrent with other live loads.
6) Building Designer/Project engineer responsible for verifying Rain Load = 5.0 (psf) covers rain loading requirements specific to the use of this truss component.
7) Gable requires continuous bottom chord bearing.
8) Truss to be fully sheathed from one face or securely braced against lateral movement (i.e. diagonal web).
9) Gable studs spaced at 4-0-0 oc.
10) This truss has been designed for a 10.0 psf bottom chord live load nonconcurrent with any other live loads.
11) * This truss has been designed for a live load of 20.0psf on the bottom chord in all areas where a rectangle 3-06-00 tall by 2-00-00 wide will fit between the bottom chord and any other members.
12) Provide mechanical connection (by others) of truss to bearing plate capable of withstanding 60 lb uplift at joint 8 and 60 lb uplift at joint 6.
13) This truss is designed in accordance with the 2018 International Residential Code sections R502.11.1 and R802.10.2 and referenced standard ANSI/TPI 1.

LOAD CASE(S) Standard

July 17,2025

WARNING - Verify design parameters and READ NOTES ON THIS AND INCLUDED MITEK REFERENCE PAGE MII-7473 rev. 1/2/2023 BEFORE USE.
Design valid for use only with MiTek® connectors. This design is based only upon parameters shown, and is for an individual building component, not a truss system. Before use, the building designer must verify the applicability of design parameters and properly incorporate this design into the overall building design. Bracing indicated is to prevent buckling of individual truss web and/or chord members only. Additional temporary and permanent bracing is always required for stability and to prevent collapse with possible personal injury and property damage. For general guidance regarding the fabrication, storage, delivery, erection and bracing of trusses and truss systems, see **ANSI/TPI1 Quality Criteria and DSB-22** available from Truss Plate Institute (www.tpinst.org) and **BCSI Building Component Safety Information** available from the Structural Building Component Association (www.sbcacomponents.com)

ENGINEERING BY TRENCO A MiTek Affiliate
818 Soundside Road
Edenton, NC 27932

Job	Truss	Truss Type	Qty	Ply	914 Serenity
P05928-31416	V06	Valley	1	1	I74944993 Job Reference (optional)

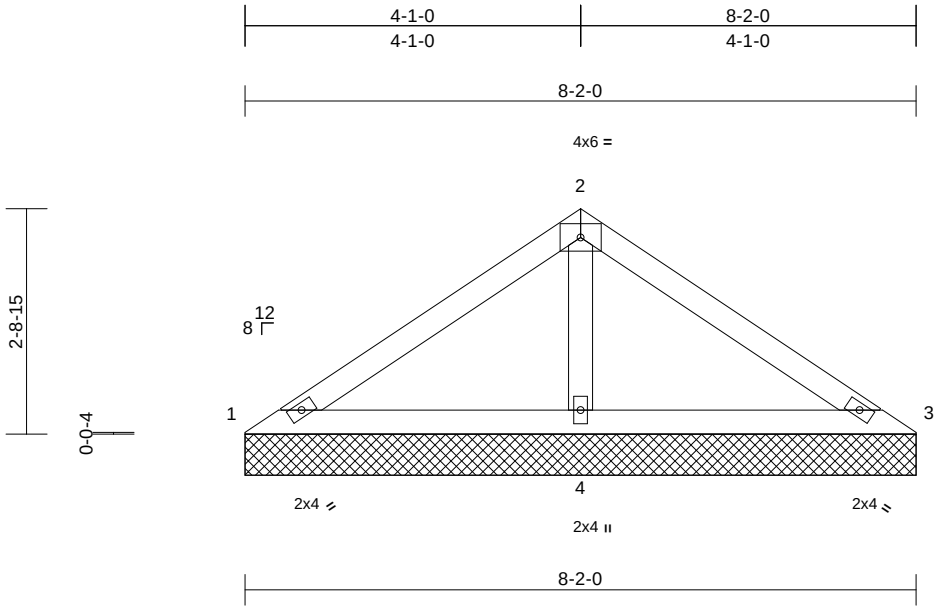

Scale = 1:28

Loading	(psf)	Spacing	2-0-0	CSI		DEFL	in	(loc)	l/defl	L/d	PLATES	GRIP
TCLL (roof)	20.0	Plate Grip DOL	1.15	TC	0.21	Vert(LL)	n/a	-	n/a	999	MT20	244/190
Snow (Pf/Pg)	7.7/10.0	Lumber DOL	1.15	BC	0.20	Vert(TL)	n/a	-	n/a	999		
TCDL	10.0	Rep Stress Incr	YES	WB	0.06	Horiz(TL)	0.00	3	n/a	n/a		
BCLL	0.0*	Code	IRC2018/TPI2014	Matrix-MP								
BCDL	10.0										Weight: 28 lb	FT = 20%

LUMBER
TOP CHORD 2x4 SP No.2
BOT CHORD 2x4 SP No.2
OTHERS 2x4 SP No.2

BRACING
TOP CHORD Structural wood sheathing directly applied or 8-2-0 oc purlins.
BOT CHORD Rigid ceiling directly applied or 6-0-0 oc bracing.

REACTIONS (size) 1=8-2-0, 3=8-2-0, 4=8-2-0
Max Horiz 1=-47 (LC 10)
Max Uplift 1=-15 (LC 32), 3=-15 (LC 31), 4=-58 (LC 14)
Max Grav 1=67 (LC 31), 3=67 (LC 32), 4=585 (LC 2)

FORCES (lb) - Maximum Compression/Maximum Tension
TOP CHORD 1-2=-81/262, 2-3=-81/262
BOT CHORD 1-4=-185/119, 3-4=-185/119
WEBS 2-4=-425/148

NOTES
1) Unbalanced roof live loads have been considered for this design.
2) Wind: ASCE 7-16; Vult=115mph (3-second gust) Vasd=91mph; TCDL=6.0psf; BCDL=3.0psf; h=25ft; Cat. II; Exp B; Enclosed; MWFRS (envelope) exterior zone and C-C Exterior(2E) 0-0-6 to 3-0-6, Interior (1) 3-0-6 to 4-1-6, Exterior(2R) 4-1-6 to 7-3-3, Interior (1) 7-3-3 to 8-2-6 zone; cantilever left and right exposed ; end vertical left and right exposed;C-C for members and forces & MWFRS for reactions shown; Lumber DOL=1.60 plate grip DOL=1.60
3) Truss designed for wind loads in the plane of the truss only. For studs exposed to wind (normal to the face), see Standard Industry Gable End Details as applicable, or consult qualified building designer as per ANSI/TPI 1.
4) TCLL: ASCE 7-16; Pr=20.0 psf (roof LL: Lum DOL=1.15 Plate DOL=1.15); Pg=10.0 psf; Pf=7.7 psf (Lum DOL = 1.15 Plate DOL = 1.15); Is=1.0; Rough Cat B; Partially Exp.; Ce=1.0; Cs=1.00; Ct=1.10
5) Building Designer/Project engineer responsible for verifying Rain Load = 5.0 (psf) covers rain loading requirements specific to the use of this truss component.
6) Gable requires continuous bottom chord bearing.
7) Gable studs spaced at 4-0-0 oc.
8) This truss has been designed for a 10.0 psf bottom chord live load nonconcurrent with any other live loads.
9) * This truss has been designed for a live load of 20.0psf on the bottom chord in all areas where a rectangle 3-06-00 tall by 2-00-00 wide will fit between the bottom chord and any other members.
10) Provide mechanical connection (by others) of truss to bearing plate capable of withstanding 15 lb uplift at joint 1, 15 lb uplift at joint 3 and 58 lb uplift at joint 4.
11) This truss is designed in accordance with the 2018 International Residential Code sections R502.11.1 and R802.10.2 and referenced standard ANSI/TPI 1.

LOAD CASE(S) Standard

July 17,2025

WARNING - Verify design parameters and READ NOTES ON THIS AND INCLUDED MITEK REFERENCE PAGE MII-7473 rev. 1/2/2023 BEFORE USE.
Design valid for use only with MiTek® connectors. This design is based only upon parameters shown, and is for an individual building component, not a truss system. Before use, the building designer must verify the applicability of design parameters and properly incorporate this design into the overall building design. Bracing indicated is to prevent buckling of individual truss web and/or chord members only. Additional temporary and permanent bracing is always required for stability and to prevent collapse with possible personal injury and property damage. For general guidance regarding the fabrication, storage, delivery, erection and bracing of trusses and truss systems, see **ANSI/TPI1 Quality Criteria and DSB-22** available from Truss Plate Institute (www.tpinst.org) and **BCSI Building Component Safety Information** available from the Structural Building Component Association (www.sbcacomponents.com)

ENGINEERING BY TRENCO A MiTek Affiliate
818 Soundside Road
Edenton, NC 27932

Job	Truss	Truss Type	Qty	Ply	914 Serenity
P05928-31416	V07	Valley	1	1	I74944994 Job Reference (optional)

84 Lumber-2383 (Dunn, NC), Dunn, NC - 28334, Run: 8.83 S Jun 11 2025 Print: 8.830 S Jun 11 2025 MiTek Industries, Inc. Wed Jul 16 10:26:44 Page: 1
ID:oVXVwM8As_E3kZQj_gcoswzxCBP-RfC?PsB70Hq3NSgPqnL8w3uITXbGKWrCDoi7J4zJC?f

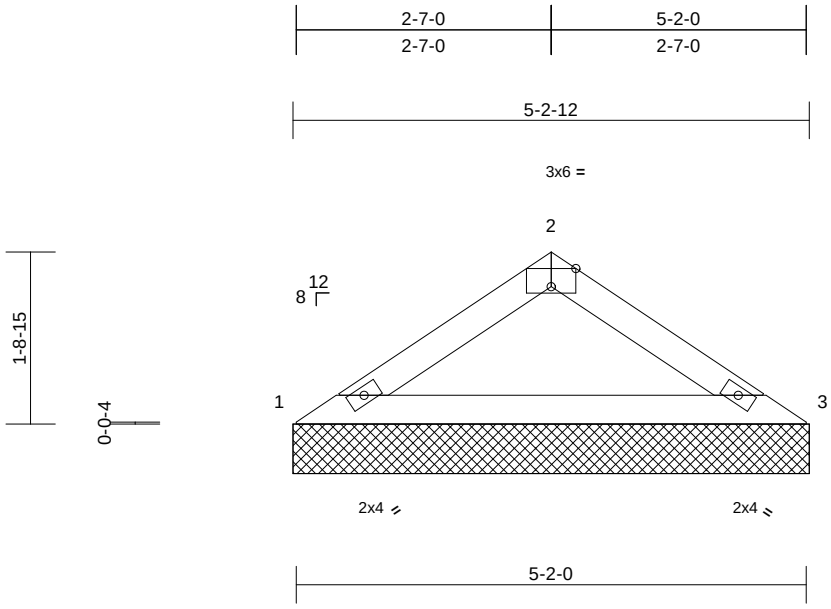

Scale = 1:23.3

Plate Offsets (X, Y): [2:0-3-0,Edge]

Loading	(psf)	Spacing	2-0-0	CSI		DEFL	in	(loc)	l/defl	L/d	PLATES	GRIP
TCLL (roof)	20.0	Plate Grip DOL	1.15	TC	0.20	Vert(LL)	n/a	-	n/a	999	MT20	244/190
Snow (Pf/Pg)	7.7/10.0	Lumber DOL	1.15	BC	0.17	Vert(TL)	n/a	-	n/a	999		
TCDL	10.0	Rep Stress Incr	YES	WB	0.00	Horiz(TL)	0.01	3	n/a	n/a		
BCLL	0.0*	Code	IRC2018/TPI2014	Matrix-MP								
BCDL	10.0										Weight: 15 lb	FT = 20%

LUMBER
TOP CHORD 2x4 SP No.2
BOT CHORD 2x4 SP No.2

BRACING
TOP CHORD Structural wood sheathing directly applied or 5-2-0 oc purlins.
BOT CHORD Rigid ceiling directly applied or 10-0-0 oc bracing.

REACTIONS (size) 1=5-2-12, 3=5-2-12
Max Horiz 1=29 (LC 13)
Max Uplift 1=-17 (LC 14), 3=-17 (LC 15)
Max Grav 1=209 (LC 2), 3=209 (LC 2)

FORCES (lb) - Maximum Compression/Maximum Tension
TOP CHORD 1-2=-331/109, 2-3=-331/109
BOT CHORD 1-3=-81/270

NOTES
1) Unbalanced roof live loads have been considered for this design.
2) Wind: ASCE 7-16; Vult=115mph (3-second gust) Vasd=91mph; TCDL=6.0psf; BCDL=3.0psf; h=25ft; Cat. II; Exp B; Enclosed; MWFRS (envelope) exterior zone and C-C Exterior(2E) zone; cantilever left and right exposed ; end vertical left and right exposed;C-C for members and forces & MWFRS for reactions shown; Lumber DOL=1.60 plate grip DOL=1.60
3) Truss designed for wind loads in the plane of the truss only. For studs exposed to wind (normal to the face), see Standard Industry Gable End Details as applicable, or consult qualified building designer as per ANSI/TPI 1.
4) TCLL: ASCE 7-16; Pr=20.0 psf (roof LL: Lum DOL=1.15 Plate DOL=1.15); Pg=10.0 psf; Pf=7.7 psf (Lum DOL = 1.15 Plate DOL = 1.15); Is=1.0; Rough Cat B; Partially Exp.; Ce=1.0; Cs=1.00; Ct=1.10
5) Building Designer/Project engineer responsible for verifying Rain Load = 5.0 (psf) covers rain loading requirements specific to the use of this truss component.
6) Gable requires continuous bottom chord bearing.
7) Gable studs spaced at 4-0-0 oc.
8) This truss has been designed for a 10.0 psf bottom chord live load nonconcurrent with any other live loads.
9) * This truss has been designed for a live load of 20.0psf on the bottom chord in all areas where a rectangle 3-06-00 tall by 2-00-00 wide will fit between the bottom chord and any other members.
10) Provide mechanical connection (by others) of truss to bearing plate capable of withstanding 17 lb uplift at joint 1 and 17 lb uplift at joint 3.
11) Beveled plate or shim required to provide full bearing surface with truss chord at joint(s) 1, 3.
12) This truss is designed in accordance with the 2018 International Residential Code sections R502.11.1 and R802.10.2 and referenced standard ANSI/TPI 1.

LOAD CASE(S) Standard

July 17,2025

WARNING - Verify design parameters and READ NOTES ON THIS AND INCLUDED MITEK REFERENCE PAGE MII-7473 rev. 1/2/2023 BEFORE USE.
Design valid for use only with MiTek® connectors. This design is based only upon parameters shown, and is for an individual building component, not a truss system. Before use, the building designer must verify the applicability of design parameters and properly incorporate this design into the overall building design. Bracing indicated is to prevent buckling of individual truss web and/or chord members only. Additional temporary and permanent bracing is always required for stability and to prevent collapse with possible personal injury and property damage. For general guidance regarding the fabrication, storage, delivery, erection and bracing of trusses and truss systems, see **ANSI/TPI1 Quality Criteria and DSB-22** available from Truss Plate Institute (www.tpinst.org) and **BCSI Building Component Safety Information** available from the Structural Building Component Association (www.sbcacomponents.com)

ENGINEERING BY TRENCO A MiTek Affiliate
818 Soundside Road
Edenton, NC 27932

Job	Truss	Truss Type	Qty	Ply	914 Serenity
P05928-31416	V08	Valley	1	1	I74944995 Job Reference (optional)

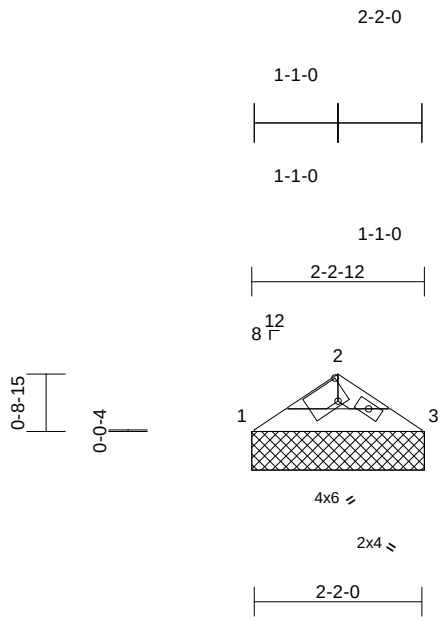

Scale = 1:29.8

Plate Offsets (X, Y): [1:0-1-9,0-3-4]

Loading	(psf)	Spacing	2-0-0	CSI		DEFL	in	(loc)	l/defl	L/d	PLATES	GRIP
TCLL (roof)	20.0	Plate Grip DOL	1.15	TC	0.02	Vert(LL)	n/a	-	n/a	999	MT20	244/190
Snow (Pf/Pg)	7.7/10.0	Lumber DOL	1.15	BC	0.05	Vert(TL)	n/a	-	n/a	999		
TCDL	10.0	Rep Stress Incr	YES	WB	0.00	Horiz(TL)	0.00	3	n/a	n/a		
BCLL	0.0*	Code	IRC2018/TPI2014	Matrix-MP								
BCDL	10.0										Weight: 6 lb	FT = 20%

LUMBER
TOP CHORD 2x4 SP No.2
BOT CHORD 2x4 SP No.2

BRACING
TOP CHORD Structural wood sheathing directly applied or 2-2-0 oc purlins.
BOT CHORD Rigid ceiling directly applied or 10-0-0 oc bracing.

REACTIONS (size) 1=2-2-12, 3=2-2-12
Max Horiz 1=10 (LC 13)
Max Uplift 1=-8 (LC 14), 3=-8 (LC 15)
Max Grav 1=89 (LC 2), 3=89 (LC 2)

FORCES (lb) - Maximum Compression/Maximum Tension
TOP CHORD 1-2=-118/40, 2-3=-118/40
BOT CHORD 1-3=-24/98

NOTES
1) Unbalanced roof live loads have been considered for this design.
2) Wind: ASCE 7-16; Vult=115mph (3-second gust) Vasd=91mph; TCDL=6.0psf; BCDL=3.0psf; h=25ft; Cat. II; Exp B; Enclosed; MWFRS (envelope) exterior zone and C-C Exterior(2E) zone; cantilever left and right exposed ; end vertical left and right exposed;C-C for members and forces & MWFRS for reactions shown; Lumber DOL=1.60 plate grip DOL=1.60
3) Truss designed for wind loads in the plane of the truss only. For studs exposed to wind (normal to the face), see Standard Industry Gable End Details as applicable, or consult qualified building designer as per ANSI/TPI 1.
4) TCLL: ASCE 7-16; Pr=20.0 psf (roof LL: Lum DOL=1.15 Plate DOL=1.15); Pg=10.0 psf; Pf=7.7 psf (Lum DOL = 1.15 Plate DOL = 1.15); Is=1.0; Rough Cat B; Partially Exp.; Ce=1.0; Cs=1.00; Ct=1.10
5) Building Designer/Project engineer responsible for verifying Rain Load = 5.0 (psf) covers rain loading requirements specific to the use of this truss component.
6) Gable requires continuous bottom chord bearing.
7) Gable studs spaced at 4-0-0 oc.
8) This truss has been designed for a 10.0 psf bottom chord live load nonconcurrent with any other live loads.
9) * This truss has been designed for a live load of 20.0psf on the bottom chord in all areas where a rectangle 3-06-00 tall by 2-00-00 wide will fit between the bottom chord and any other members.
10) Provide mechanical connection (by others) of truss to bearing plate capable of withstanding 8 lb uplift at joint 1 and 8 lb uplift at joint 3.
11) Beveled plate or shim required to provide full bearing surface with truss chord at joint(s) 1, 3.
12) This truss is designed in accordance with the 2018 International Residential Code sections R502.11.1 and R802.10.2 and referenced standard ANSI/TPI 1.

LOAD CASE(S) Standard

July 17,2025

WARNING - Verify design parameters and READ NOTES ON THIS AND INCLUDED MITEK REFERENCE PAGE MII-7473 rev. 1/2/2023 BEFORE USE.
Design valid for use only with MiTek® connectors. This design is based only upon parameters shown, and is for an individual building component, not a truss system. Before use, the building designer must verify the applicability of design parameters and properly incorporate this design into the overall building design. Bracing indicated is to prevent buckling of individual truss web and/or chord members only. Additional temporary and permanent bracing is always required for stability and to prevent collapse with possible personal injury and property damage. For general guidance regarding the fabrication, storage, delivery, erection and bracing of trusses and truss systems, see **ANSI/TPI1 Quality Criteria and DSB-22** available from Truss Plate Institute (www.tpinst.org) and **BCSI Building Component Safety Information** available from the Structural Building Component Association (www.sbcacomponents.com)

ENGINEERING BY TRENCO A MiTek Affiliate
818 Soundside Road
Edenton, NC 27932

Job	Truss	Truss Type	Qty	Ply	914 Serenity
P05928-31416	V09	Valley	1	1	I74944996 Job Reference (optional)

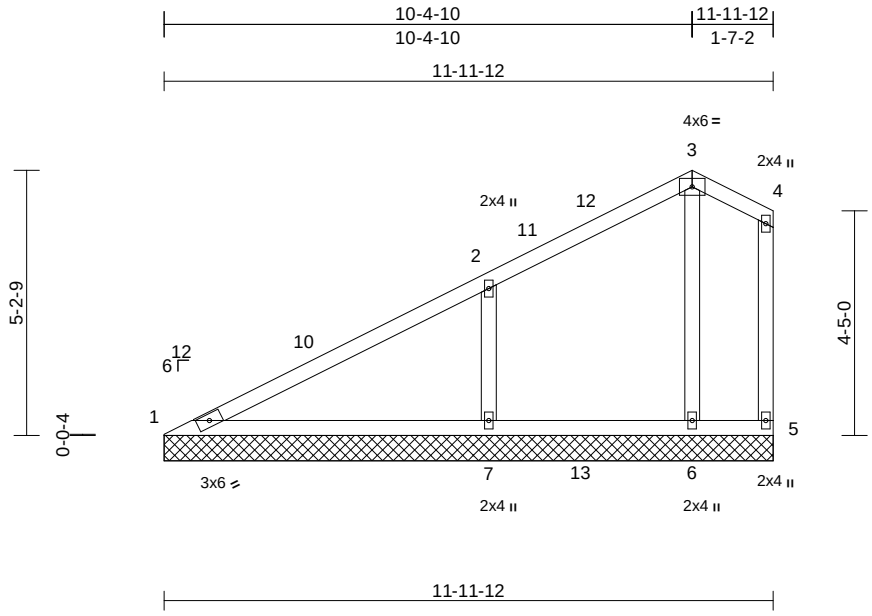

Scale = 1:45.3

Loading	(psf)	Spacing	2-0-0	CSI		DEFL	in	(loc)	l/defl	L/d	PLATES	GRIP
TCLL (roof)	20.0	Plate Grip DOL	1.15	TC	0.43	Vert(LL)	n/a	-	n/a	999	MT20	244/190
Snow (Pf/Pg)	7.7/10.0	Lumber DOL	1.15	BC	0.41	Vert(TL)	n/a	-	n/a	999		
TCDL	10.0	Rep Stress Incr	YES	WB	0.06	Horiz(TL)	0.01	7	n/a	n/a		
BCLL	0.0*	Code	IRC2018/TPI2014	Matrix-MS								
BCDL	10.0										Weight: 54 lb	FT = 20%

LUMBER

TOP CHORD 2x4 SP No.2
BOT CHORD 2x4 SP No.2
WEBS 2x4 SP No.2
OTHERS 2x4 SP No.2

BRACING

TOP CHORD Structural wood sheathing directly applied or 6-0-0 oc purlins, except end verticals.
BOT CHORD Rigid ceiling directly applied or 6-0-0 oc bracing.

REACTIONS (size) 1=11-11-12, 5=11-11-12, 6=11-11-12, 7=11-11-12
Max Horiz 1=132 (LC 13)
Max Uplift 5=-18 (LC 12), 6=-13 (LC 13), 7=-116 (LC 16)
Max Grav 1=213 (LC 30), 5=53 (LC 30), 6=209 (LC 29), 7=577 (LC 37)

FORCES (lb) - Maximum Compression/Maximum Tension
TOP CHORD 1-2=-386/128, 2-3=-100/80, 3-4=-76/90, 4-5=-61/64
BOT CHORD 1-7=-142/325, 6-7=-59/62, 5-6=-59/62
WEBS 3-6=-132/127, 2-7=-365/181

NOTES

1) Unbalanced roof live loads have been considered for this design.
2) Wind: ASCE 7-16; Vult=115mph (3-second gust) Vasd=91mph; TCDL=6.0psf; BCDL=3.0psf; h=25ft; Cat. II; Exp B; Enclosed; MWFRS (envelope) exterior zone and C-C Exterior(2E) 0-0-8 to 3-0-8, Interior (1) 3-0-8 to 10-5-2, Exterior(2E) 10-5-2 to 11-10-8 zone; cantilever left and right exposed ; end vertical left and right exposed;C-C for members and forces & MWFRS for reactions shown; Lumber DOL=1.60 plate grip DOL=1.60
3) Truss designed for wind loads in the plane of the truss only. For studs exposed to wind (normal to the face), see Standard Industry Gable End Details as applicable, or consult qualified building designer as per ANSI/TPI 1.
4) TCLL: ASCE 7-16; Pr=20.0 psf (roof LL: Lum DOL=1.15 Plate DOL=1.15); Pg=10.0 psf; Pf=7.7 psf (Lum DOL = 1.15 Plate DOL = 1.15); Is=1.0; Rough Cat B; Partially Exp.; Ce=1.0; Cs=1.00; Ct=1.10
5) Unbalanced snow loads have been considered for this design.
6) Building Designer/Project engineer responsible for verifying Rain Load = 5.0 (psf) covers rain loading requirements specific to the use of this truss component.
7) Gable requires continuous bottom chord bearing.
8) Gable studs spaced at 4-0-0 oc.
9) This truss has been designed for a 10.0 psf bottom chord live load nonconcurrent with any other live loads.
10) * This truss has been designed for a live load of 20.0psf on the bottom chord in all areas where a rectangle 3-06-00 tall by 2-00-00 wide will fit between the bottom chord and any other members, with BCDL = 10.0psf.
11) Provide mechanical connection (by others) of truss to bearing plate capable of withstanding 18 lb uplift at joint 5, 13 lb uplift at joint 6 and 116 lb uplift at joint 7.
12) This truss is designed in accordance with the 2018 International Residential Code sections R502.11.1 and R802.10.2 and referenced standard ANSI/TPI 1.

LOAD CASE(S) Standard

July 17,2025

WARNING - Verify design parameters and READ NOTES ON THIS AND INCLUDED MITEK REFERENCE PAGE MII-7473 rev. 1/2/2023 BEFORE USE.
Design valid for use only with MiTek® connectors. This design is based only upon parameters shown, and is for an individual building component, not a truss system. Before use, the building designer must verify the applicability of design parameters and properly incorporate this design into the overall building design. Bracing indicated is to prevent buckling of individual truss web and/or chord members only. Additional temporary and permanent bracing is always required for stability and to prevent collapse with possible personal injury and property damage. For general guidance regarding the fabrication, storage, delivery, erection and bracing of trusses and truss systems, see **ANSI/TPI1 Quality Criteria and DSB-22** available from Truss Plate Institute (www.tpinst.org) and **BCSI Building Component Safety Information** available from the Structural Building Component Association (www.sbcacomponents.com)

ENGINEERING BY TRENCO A MiTek Affiliate
818 Soundside Road
Edenton, NC 27932

Job	Truss	Truss Type	Qty	Ply	914 Serenity
P05928-31416	V10	Valley	1	1	I74944997 Job Reference (optional)

84 Lumber-2383 (Dunn, NC), Dunn, NC - 28334, Run: 8.83 S Jun 11 2025 Print: 8.830 S Jun 11 2025 MiTek Industries, Inc. Wed Jul 16 10:26:44 Page: 1
ID:Gh5t8i9pdIMwLj?vXO71P7zxCBO-RfC?PsB70Hq3NSgPqnL8w3uITXbGKWrCDoi7J4zJC?f

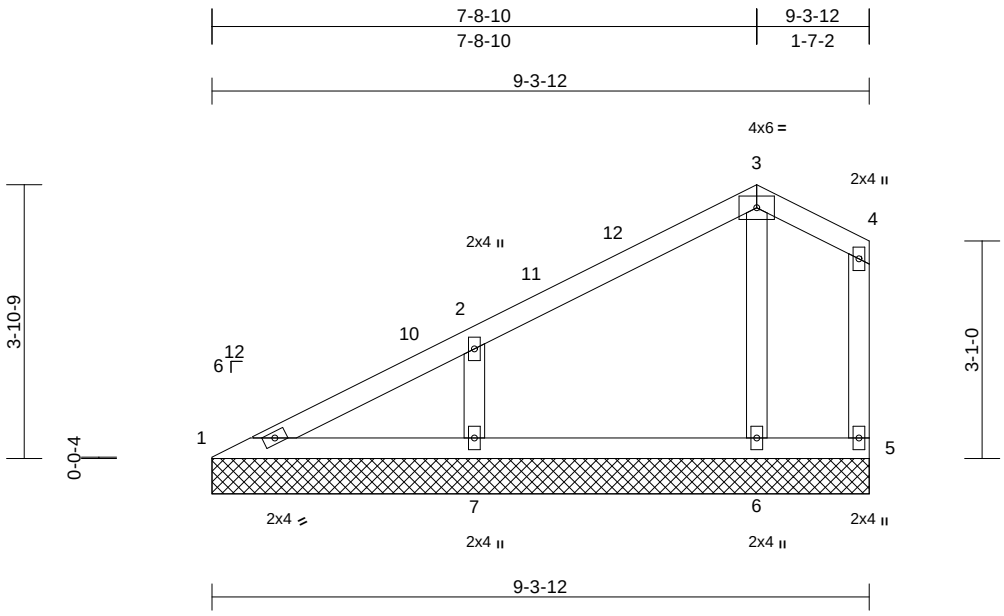

Scale = 1:32.6

Loading	(psf)	Spacing	2-0-0	CSI		DEFL	in	(loc)	l/defl	L/d	PLATES	GRIP
TCLL (roof)	20.0	Plate Grip DOL	1.15	TC	0.21	Vert(LL)	n/a	-	n/a	999	MT20	244/190
Snow (Pf/Pg)	7.7/10.0	Lumber DOL	1.15	BC	0.12	Vert(TL)	n/a	-	n/a	999		
TCDL	10.0	Rep Stress Incr	YES	WB	0.04	Horiz(TL)	0.00	7	n/a	n/a		
BCLL	0.0*	Code	IRC2018/TPI2014	Matrix-MS								
BCDL	10.0										Weight: 39 lb	FT = 20%

LUMBER

TOP CHORD	2x4 SP No.2
BOT CHORD	2x4 SP No.2
WEBS	2x4 SP No.2
OTHERS	2x4 SP No.2

BRACING

TOP CHORD	Structural wood sheathing directly applied or 6-0-0 oc purlins, except end verticals.
BOT CHORD	Rigid ceiling directly applied or 6-0-0 oc bracing.

REACTIONS (size) 1=9-3-12, 5=9-3-12, 6=9-3-12, 7=9-3-12
Max Horiz 1=92 (LC 13)
Max Uplift 5=-17 (LC 12), 6=-9 (LC 13), 7=-78 (LC 16)
Max Grav 1=112 (LC 2), 5=37 (LC 36), 6=231 (LC 2), 7=367 (LC 35)

FORCES (lb) - Maximum Compression/Maximum Tension

TOP CHORD	1-2=-174/94, 2-3=-80/54, 3-4=-50/64, 4-5=-38/43
BOT CHORD	1-7=-83/143, 6-7=-40/42, 5-6=-40/42
WEBS	3-6=-171/138, 2-7=-262/162

NOTES

1) Unbalanced roof live loads have been considered for this design.
2) Wind: ASCE 7-16; Vult=115mph (3-second gust) Vasd=91mph; TCDL=6.0psf; BCDL=3.0psf; h=25ft; Cat. II; Exp B; Enclosed; MWFRS (envelope) exterior zone and C-C Exterior(2E) 0-0-8 to 3-0-8, Interior (1) 3-0-8 to 7-9-2, Exterior(2E) 7-9-2 to 9-2-8 zone; cantilever left and right exposed ; end vertical left and right exposed;C-C for members and forces & MWFRS for reactions shown; Lumber DOL=1.60 plate grip DOL=1.60
3) Truss designed for wind loads in the plane of the truss only. For studs exposed to wind (normal to the face), see Standard Industry Gable End Details as applicable, or consult qualified building designer as per ANSI/TPI 1.
4) TCLL: ASCE 7-16; Pr=20.0 psf (roof LL: Lum DOL=1.15 Plate DOL=1.15); Pg=10.0 psf; Pf=7.7 psf (Lum DOL = 1.15 Plate DOL = 1.15); Is=1.0; Rough Cat B; Partially Exp.; Ce=1.0; Cs=1.00; Ct=1.10
5) Unbalanced snow loads have been considered for this design.
6) Building Designer/Project engineer responsible for verifying Rain Load = 5.0 (psf) covers rain loading requirements specific to the use of this truss component.
7) Gable requires continuous bottom chord bearing.
8) Gable studs spaced at 4-0-0 oc.
9) This truss has been designed for a 10.0 psf bottom chord live load nonconcurrent with any other live loads.
10) * This truss has been designed for a live load of 20.0psf on the bottom chord in all areas where a rectangle 3-06-00 tall by 2-00-00 wide will fit between the bottom chord and any other members.
11) Provide mechanical connection (by others) of truss to bearing plate capable of withstanding 17 lb uplift at joint 5, 9 lb uplift at joint 6 and 78 lb uplift at joint 7.
12) This truss is designed in accordance with the 2018 International Residential Code sections R502.11.1 and R802.10.2 and referenced standard ANSI/TPI 1.

LOAD CASE(S) Standard

July 17,2025

WARNING - Verify design parameters and READ NOTES ON THIS AND INCLUDED MITEK REFERENCE PAGE MII-7473 rev. 1/2/2023 BEFORE USE.
Design valid for use only with MiTek® connectors. This design is based only upon parameters shown, and is for an individual building component, not a truss system. Before use, the building designer must verify the applicability of design parameters and properly incorporate this design into the overall building design. Bracing indicated is to prevent buckling of individual truss web and/or chord members only. Additional temporary and permanent bracing is always required for stability and to prevent collapse with possible personal injury and property damage. For general guidance regarding the fabrication, storage, delivery, erection and bracing of trusses and truss systems, see **ANSI/TPI1 Quality Criteria and DSB-22** available from Truss Plate Institute (www.tpinst.org) and **BCSI Building Component Safety Information** available from the Structural Building Component Association (www.sbcacomponents.com)

ENGINEERING BY TRENCO A MiTek Affiliate
818 Soundside Road
Edenton, NC 27932

Job	Truss	Truss Type	Qty	Ply	914 Serenity
P05928-31416	V11	Valley	1	1	I74944998 Job Reference (optional)

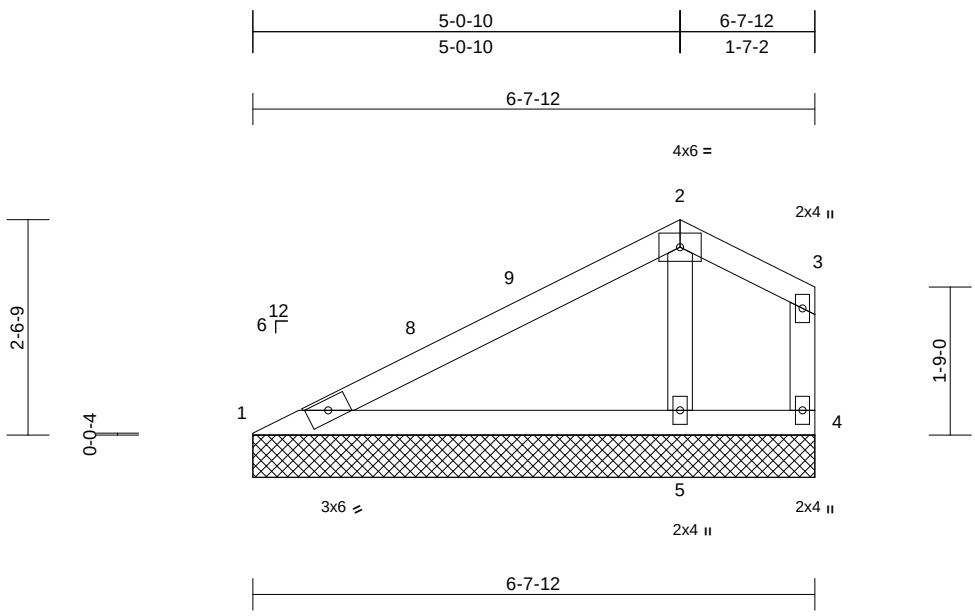

Scale = 1:27.2

Loading	(psf)	Spacing	2-0-0	CSI		DEFL	in	(loc)	l/defl	L/d	PLATES	GRIP
TCLL (roof)	20.0	Plate Grip DOL	1.15	TC	0.30	Vert(LL)	n/a	-	n/a	999	MT20	244/190
Snow (Pf/Pg)	7.7/10.0	Lumber DOL	1.15	BC	0.38	Vert(TL)	n/a	-	n/a	999		
TCDL	10.0	Rep Stress Incr	YES	WB	0.02	Horiz(TL)	0.01	4	n/a	n/a		
BCLL	0.0*	Code	IRC2018/TPI2014	Matrix-MP								
BCDL	10.0										Weight: 25 lb	FT = 20%

LUMBER

TOP CHORD	2x4 SP No.2
BOT CHORD	2x4 SP No.2
WEBS	2x4 SP No.2
OTHERS	2x4 SP No.2

BRACING

TOP CHORD	Structural wood sheathing directly applied or 6-0-0 oc purlins, except end verticals.
BOT CHORD	Rigid ceiling directly applied or 10-0-0 oc bracing.

REACTIONS (size) 1=6-7-12, 4=6-7-12, 5=6-7-12
Max Horiz 1=53 (LC 13)
Max Uplift 1=-19 (LC 16), 4=-45 (LC 35), 5=-35 (LC 16)
Max Grav 1=181 (LC 35), 4=16 (LC 36), 5=355 (LC 2)

FORCES (lb) - Maximum Compression/Maximum Tension

TOP CHORD	1-2=-303/110, 2-3=-36/47, 3-4=-43/45
BOT CHORD	1-5=-155/266, 4-5=-21/22
WEBS	2-5=-163/119

NOTES

1) Unbalanced roof live loads have been considered for this design.
2) Wind: ASCE 7-16; Vult=115mph (3-second gust) Vasd=91mph; TCDL=6.0psf; BCDL=3.0psf; h=25ft; Cat. II; Exp B; Enclosed; MWFRS (envelope) exterior zone and C-C Exterior(2E) 0-0-8 to 3-0-8, Interior (1) 3-0-8 to 5-1-2, Exterior(2E) 5-1-2 to 6-6-8 zone; cantilever left and right exposed ; end vertical left and right exposed;C-C for members and forces & MWFRS for reactions shown; Lumber DOL=1.60 plate grip DOL=1.60
3) Truss designed for wind loads in the plane of the truss only. For studs exposed to wind (normal to the face), see Standard Industry Gable End Details as applicable, or consult qualified building designer as per ANSI/TPI 1.
4) TCLL: ASCE 7-16; Pr=20.0 psf (roof LL: Lum DOL=1.15 Plate DOL=1.15); Pg=10.0 psf; Pf=7.7 psf (Lum DOL = 1.15 Plate DOL = 1.15); Is=1.0; Rough Cat B; Partially Exp.; Ce=1.0; Cs=1.00; Ct=1.10
5) Unbalanced snow loads have been considered for this design.
6) Building Designer/Project engineer responsible for verifying Rain Load = 5.0 (psf) covers rain loading requirements specific to the use of this truss component.
7) Gable requires continuous bottom chord bearing.
8) Gable studs spaced at 4-0-0 oc.
9) This truss has been designed for a 10.0 psf bottom chord live load nonconcurrent with any other live loads.
10) * This truss has been designed for a live load of 20.0psf on the bottom chord in all areas where a rectangle 3-06-00 tall by 2-00-00 wide will fit between the bottom chord and any other members.
11) Provide mechanical connection (by others) of truss to bearing plate capable of withstanding 45 lb uplift at joint 4, 19 lb uplift at joint 1 and 35 lb uplift at joint 5.
12) This truss is designed in accordance with the 2018 International Residential Code sections R502.11.1 and R802.10.2 and referenced standard ANSI/TPI 1.

LOAD CASE(S) Standard

July 17,2025

WARNING - Verify design parameters and READ NOTES ON THIS AND INCLUDED MITEK REFERENCE PAGE MII-7473 rev. 1/2/2023 BEFORE USE.
Design valid for use only with MiTek® connectors. This design is based only upon parameters shown, and is for an individual building component, not a truss system. Before use, the building designer must verify the applicability of design parameters and properly incorporate this design into the overall building design. Bracing indicated is to prevent buckling of individual truss web and/or chord members only. Additional temporary and permanent bracing is always required for stability and to prevent collapse with possible personal injury and property damage. For general guidance regarding the fabrication, storage, delivery, erection and bracing of trusses and truss systems, see **ANSI/TPI1 Quality Criteria and DSB-22** available from Truss Plate Institute (www.tpinst.org) and **BCSI Building Component Safety Information** available from the Structural Building Component Association (www.sbcacomponents.com)

ENGINEERING BY TRENCO A MiTek Affiliate
818 Soundside Road
Edenton, NC 27932

Symbols

PLATE LOCATION AND ORIENTATION

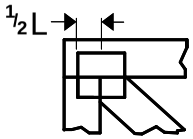

Center plate on joint unless x, y offsets are indicated. Dimensions are in ft-in-sixteenths. Apply plates to both sides of truss and fully embed teeth.

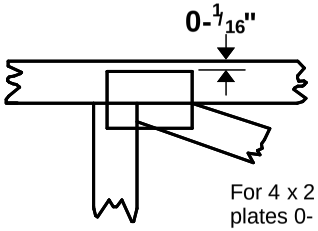

For 4 x 2 orientation, locate plates 0- 1/16" from outside edge of truss.

This symbol indicates the required direction of slots in connector plates.

* Plate location details available in MiTek software or upon request.

PLATE SIZE

4 x 4

The first dimension is the plate width measured perpendicular to slots. Second dimension is the length parallel to slots.

LATERAL BRACING LOCATION

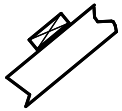

Indicated by symbol shown and/or by text in the bracing section of the output. Use T or I bracing if indicated.

BEARING

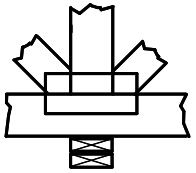

Indicates location where bearings (supports) occur. Icons vary but reaction section indicates joint number/letter where bearings occur. Min size shown is for crushing only.

Industry Standards:

ANSI/TPI1: National Design Specification for Metal Plate Connected Wood Truss Construction.
DSB-22: Design Standard for Bracing.
BCSI: Building Component Safety Information, Guide to Good Practice for Handling, Installing, Restraining & Bracing of Metal Plate Connected Wood Trusses.

Numbering System

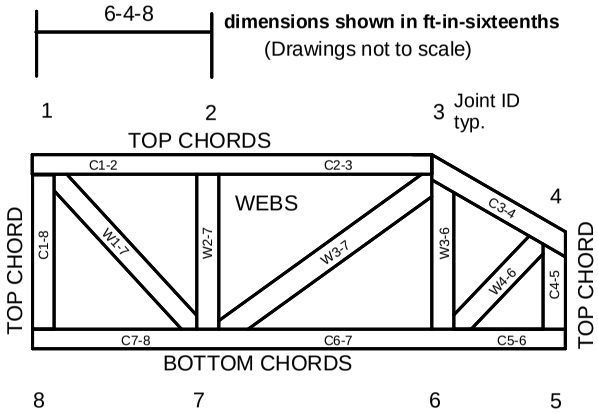

JOINTS ARE GENERALLY NUMBERED/LETTERED CLOCKWISE AROUND THE TRUSS STARTING AT THE JOINT FARTHEST TO THE LEFT.

CHORDS AND WEBS ARE IDENTIFIED BY END JOINT NUMBERS/LETTERS.

Product Code Approvals

ICC-ES Reports:

ESR-1988, ESR-2362, ESR-2685, ESR-3282
ESR-4722, ESL-1388

Design General Notes

Trusses are designed for wind loads in the plane of the truss unless otherwise shown.

Lumber design values are in accordance with ANSI/TPI 1 section 6.3 These truss designs rely on lumber values established by others.

© 2023 MiTek® All Rights Reserved

MiTek®

ENGINEERING BY TRENCO
A MiTek Affiliate

General Safety Notes

Failure to Follow Could Cause Property Damage or Personal Injury

1. Additional stability bracing for truss system, e.g. diagonal or X-bracing, is always required. See BCSI.
2. Truss bracing must be designed by an engineer. For wide truss spacing, individual lateral braces themselves may require bracing, or alternative Tor I bracing should be considered.
3. Never exceed the design loading shown and never stack materials on inadequately braced trusses.
4. Provide copies of this truss design to the building designer, erection supervisor, property owner and all other interested parties.
5. Cut members to bear tightly against each other.
6. Place plates on each face of truss at each joint and embed fully. Knots and wane at joint locations are regulated by ANSI/TPI 1.
7. Design assumes trusses will be suitably protected from the environment in accord with ANSI/TPI 1.
8. Unless otherwise noted, moisture content of lumber shall not exceed 19% at time of fabrication.
9. Unless expressly noted, this design is not applicable for use with fire retardant, preservative treated, or green lumber.
10. Camber is a non-structural consideration and is the responsibility of truss fabricator. General practice is to camber for dead load deflection.
11. Plate type, size, orientation and location dimensions indicated are minimum plating requirements.
12. Lumber used shall be of the species and size, and in all respects, equal to or better than that specified.
13. Top chords must be sheathed or purlins provided at spacing indicated on design.
14. Bottom chords require lateral bracing at 10 ft. spacing, or less, if no ceiling is installed, unless otherwise noted.
15. Connections not shown are the responsibility of others.
16. Do not cut or alter truss member or plate without prior approval of an engineer.
17. Install and load vertically unless indicated otherwise.
18. Use of green or treated lumber may pose unacceptable environmental, health or performance risks. Consult with project engineer before use.
19. Review all portions of this design (front, back, words and pictures) before use. Reviewing pictures alone is not sufficient.
20. Design assumes manufacture in accordance with ANSI/TPI 1 Quality Criteria.
21. The design does not take into account any dynamic or other loads other than those expressly stated.