ENGINEERING BY TRENCO
A MiTek Affiliate

RE: 4938997
JSJ Builders

Trenco
818 Soundside Rd
Edenton, NC 27932

Site Information:

Customer: JSJ Builders Project Name: 4938997
Lot/Block: 19 Model: BELFORD PRIME
Address: 179 BAXLEY DR Subdivision: ILA'S WAY
City: DUNN State: NC

General Truss Engineering Criteria & Design Loads (Individual Truss Design Drawings Show Special Loading Conditions):

Design Code: IRC2015/TPI2014 Design Program: MiTek 20/20 8.8
Wind Code: ASCE 7-10 Wind Speed: 130 mph
Roof Load: 40.0 psf Floor Load: N/A psf

This package includes 46 individual, dated Truss Design Drawings and 0 Additional Drawings.

No.	Seal#	Truss Name	Date	No.	Seal#	Truss Name	Date
1	I71926193	A01	3/12/2025	21	I71926213	C01	3/12/2025
2	I71926194	A02	3/12/2025	22	I71926214	CJ1	3/12/2025
3	I71926195	A03	3/12/2025	23	I71926215	D01	3/12/2025
4	I71926196	A04	3/12/2025	24	I71926216	D02	3/12/2025
5	I71926197	A05	3/12/2025	25	I71926217	D03	3/12/2025
6	I71926198	A06	3/12/2025	26	I71926218	E01	3/12/2025
7	I71926199	A07	3/12/2025	27	I71926219	JA1	3/12/2025
8	I71926200	A08	3/12/2025	28	I71926220	JA2	3/12/2025
9	I71926201	A09	3/12/2025	29	I71926221	JA3	3/12/2025
10	I71926202	A10	3/12/2025	30	I71926222	JA4	3/12/2025
11	I71926203	A11	3/12/2025	31	I71926223	JA5	3/12/2025
12	I71926204	A12	3/12/2025	32	I71926224	JA6	3/12/2025
13	I71926205	A13	3/12/2025	33	I71926225	JA7	3/12/2025
14	I71926206	A14	3/12/2025	34	I71926226	JA8	3/12/2025
15	I71926207	A15	3/12/2025	35	I71926227	JA9	3/12/2025
16	I71926208	A16	3/12/2025	36	I71926228	PB01	3/12/2025
17	I71926209	B01	3/12/2025	37	I71926229	V01	3/12/2025
18	I71926210	B02	3/12/2025	38	I71926230	V02	3/12/2025
19	I71926211	B03	3/12/2025	39	I71926231	V03	3/12/2025
20	I71926212	B04	3/12/2025	40	I71926232	V04	3/12/2025

The truss drawing(s) referenced above have been prepared by
Truss Engineering Co. under my direct supervision
based on the parameters provided by Builders FirstSource-Sumter,SC.

Truss Design Engineer's Name: Gilbert, Eric

My license renewal date for the state of North Carolina is December 31, 2025.

North Carolina COA: C-0844

IMPORTANT NOTE: The seal on these truss component designs is a certification that the engineer named is licensed in the jurisdiction(s) identified and that the designs comply with ANSI/TPI 1. These designs are based upon parameters shown (e.g., loads, supports, dimensions, shapes and design codes), which were given to TRENCO. Any project specific information included is for TRENCO customers file reference purpose only, and was not taken into account in the preparation of these designs. TRENCO has not independently verified the applicability of the design parameters or the designs for any particular building. Before use, the building designer should verify applicability of design parameters and properly incorporate these designs into the overall building design per ANSI/TPI 1, Chapter 2.

NORTH CAROLINA PROFESSIONAL SEAL 036322 ENGINEER ERIC A. GILBERT

March 12, 2025

Gilbert, Eric

RE: 4938997 - JSJ Builders

Trenco
818 Soundside Rd
Edenton, NC 27932

Site Information:

Project Customer: JSJ Builders Project Name: 4938997
Lot/Block: 19 Subdivision: ILA'S WAY
Address: 179 BAXLEY DR
City, County: DUNN State: NC

No.	Seal#	Truss Name	Date
41	I71926233	V05	3/12/2025
42	I71926234	V06	3/12/2025
43	I71926235	V07	3/12/2025
44	I71926236	V08	3/12/2025
45	I71926237	V09	3/12/2025
46	I71926238	V10	3/12/2025

Job	Truss	Truss Type	Qty	Ply	JSJ Builders
4938997	A01	Hip Girder	1	**2**	I71926193 Job Reference (optional)

Builders FirstSource (Sumter, SC), Sumter, SC - 29153, Run: 8.83 S Feb 18 2025 Print: 8.830 S Feb 18 2025 MiTek Industries, Inc. Mon Mar 10 12:56:43 Page: 1
ID:Oj3x?rAwS00lGDxR_JiCAlzWhXN-RfC?PsB70Hq3NSgPqnL8w3uITXbGKWrCDoi7J4zJC?f

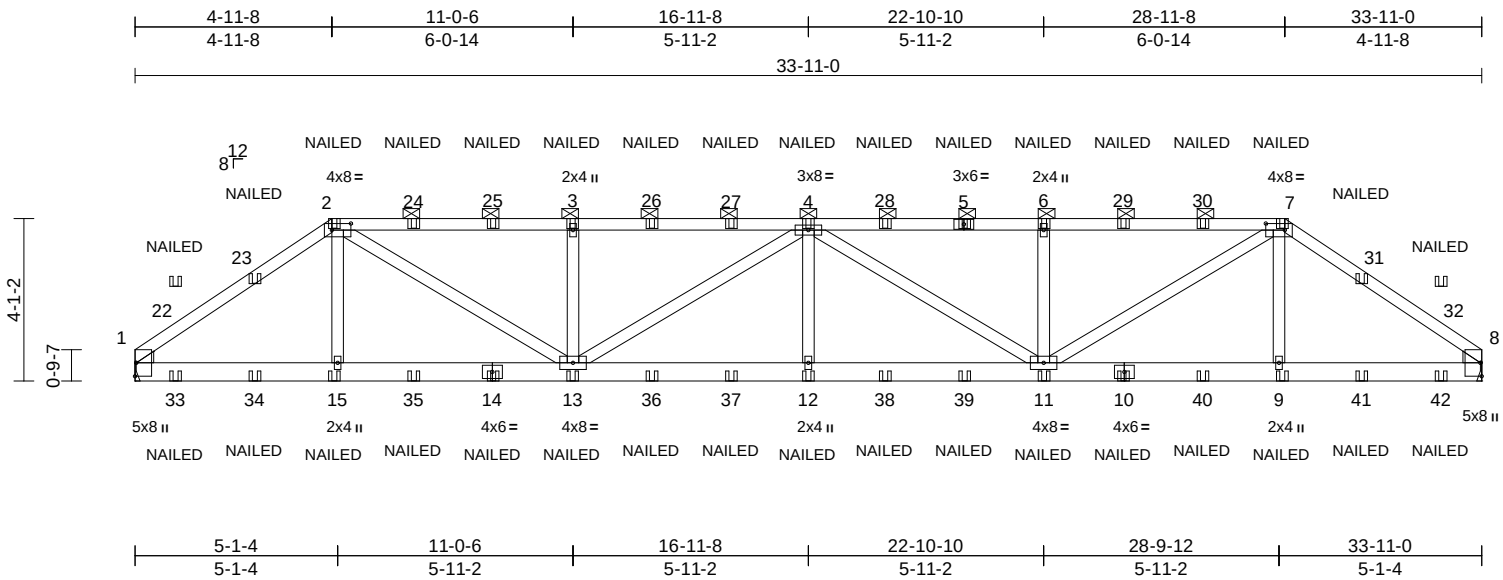

Scale = 1:58

Plate Offsets (X, Y): [1:Edge,0-0-6], [2:0-5-12,0-2-0], [7:0-5-12,0-2-0], [8:Edge,0-0-6]

Loading	(psf)	Spacing	2-0-0	CSI		DEFL	in	(loc)	l/defl	L/d	PLATES	GRIP
TCLL (roof)	20.0	Plate Grip DOL	1.15	TC	0.54	Vert(LL)	-0.15	12-13	>999	360	MT20	244/190
TCDL	10.0	Lumber DOL	1.15	BC	0.58	Vert(CT)	-0.31	12-13	>999	240		
BCLL	0.0*	Rep Stress Incr	NO	WB	0.30	Horz(CT)	0.06	8	n/a	n/a		
BCDL	10.0	Code	IRC2015/TPI2014	Matrix-MS		Wind(LL)	0.27	12-13	>999	240	Weight: 397 lb	FT = 20%

LUMBER

TOP CHORD 2x4 SP No.2
BOT CHORD 2x6 SP No.2
WEBS 2x4 SP No.2
WEDGE Left: 2x4 SP No.2
Right: 2x4 SP No.2

BRACING

TOP CHORD Structural wood sheathing directly applied or 6-0-0 oc purlins, except 2-0-0 oc purlins (5-3-4 max.): 2-7.
BOT CHORD Rigid ceiling directly applied or 9-0-9 oc bracing.

REACTIONS (size) 1= Mechanical, 8= Mechanical
Max Horiz 1=-111 (LC 4)
Max Uplift 1=-1185 (LC 5), 8=-1185 (LC 4)
Max Grav 1=2309 (LC 1), 8=2309 (LC 1)

FORCES (lb) - Maximum Compression/Maximum Tension
TOP CHORD 1-2=-3329/1837, 2-3=-4801/2788, 3-4=-4801/2788, 4-6=-4801/2788, 6-7=-4801/2788, 7-8=-3329/1838
BOT CHORD 1-15=-1551/2743, 13-15=-1553/2754, 12-13=-3164/5538, 11-12=-3164/5538, 9-11=-1460/2697, 8-9=-1460/2687
WEBS 7-9=-80/344, 2-15=-79/344, 7-11=-1528/2550, 3-13=-398/343, 2-13=-1527/2549, 4-13=-789/473, 4-12=-185/507, 4-11=-788/472, 6-11=-398/343

NOTES

1) 2-ply truss to be connected together with 10d (0.131"x3") nails as follows:
Top chords connected as follows: 2x4 - 1 row at 0-9-0 oc.
Bottom chords connected as follows: 2x6 - 2 rows staggered at 0-9-0 oc.
Web connected as follows: 2x4 - 1 row at 0-9-0 oc.
2) All loads are considered equally applied to all plies, except if noted as front (F) or back (B) face in the LOAD CASE(S) section. Ply to ply connections have been provided to distribute only loads noted as (F) or (B), unless otherwise indicated.
3) Unbalanced roof live loads have been considered for this design.
4) Wind: ASCE 7-10; Vult=130mph (3-second gust) Vasd=103mph; TCDL=6.0psf; BCDL=6.0psf; h=25ft; Cat. II; Exp C; Enclosed; MWFRS (envelope) exterior zone; cantilever left and right exposed ; end vertical left and right exposed; Lumber DOL=1.60 plate grip DOL=1.60
5) Provide adequate drainage to prevent water ponding.
6) This truss has been designed for a 10.0 psf bottom chord live load nonconcurrent with any other live loads.
7) * This truss has been designed for a live load of 20.0psf on the bottom chord in all areas where a rectangle 3-06-00 tall by 2-00-00 wide will fit between the bottom chord and any other members.
8) Refer to girder(s) for truss to truss connections.
9) Provide mechanical connection (by others) of truss to bearing plate capable of withstanding 1185 lb uplift at joint 1 and 1185 lb uplift at joint 8.
10) Graphical purlin representation does not depict the size or the orientation of the purlin along the top and/or bottom chord.
11) "NAILED" indicates 3-10d (0.148"x3") or 3-12d (0.148"x3.25") toe-nails per NDS guidlines.

LOAD CASE(S) Standard

1) Dead + Roof Live (balanced): Lumber Increase=1.15, Plate Increase=1.15
Uniform Loads (lb/ft)
Vert: 1-2=-60, 2-7=-60, 7-8=-60, 16-19=-20
Concentrated Loads (lb)
Vert: 2=-3 (F), 5=-3 (F), 7=-3 (F), 14=-110 (F), 9=-110 (F), 15=-110 (F), 11=-110 (F), 13=-110 (F), 3=-3 (F), 12=-110 (F), 4=-3 (F), 6=-3 (F), 10=-110 (F), 22=-58 (F), 24=-3 (F), 25=-3 (F), 26=-3 (F), 27=-3 (F), 28=-3 (F), 29=-3 (F), 30=-3 (F), 32=-58 (F), 33=-53 (F), 34=-112 (F), 35=-110 (F), 36=-110 (F), 37=-110 (F), 38=-110 (F), 39=-110 (F), 40=-110 (F), 41=-112 (F), 42=-53 (F)

NORTH CAROLINA PROFESSIONAL SEAL 036322 ENGINEER ERIC A. GILBERT

March 12,2025

WARNING - Verify design parameters and READ NOTES ON THIS AND INCLUDED MITEK REFERENCE PAGE MII-7473 rev. 1/2/2023 BEFORE USE.
Design valid for use only with MiTek® connectors. This design is based only upon parameters shown, and is for an individual building component, not a truss system. Before use, the building designer must verify the applicability of design parameters and properly incorporate this design into the overall building design. Bracing indicated is to prevent buckling of individual truss web and/or chord members only. Additional temporary and permanent bracing is always required for stability and to prevent collapse with possible personal injury and property damage. For general guidance regarding the fabrication, storage, delivery, erection and bracing of trusses and truss systems, see **ANSI/TPI1 Quality Criteria and DSB-22** available from Truss Plate Institute (www.tpinst.org) and **BCSI Building Component Safety Information** available from the Structural Building Component Association (www.sbcacomponents.com)

ENGINEERING BY TRENCO A MiTek Affiliate
818 Soundside Road
Edenton, NC 27932

Job	Truss	Truss Type	Qty	Ply	JSJ Builders
4938997	A02	Hip	1	1	I71926194 Job Reference (optional)

Builders FirstSource (Sumter, SC), Sumter, SC - 29153, Run: 8.83 S Feb 18 2025 Print: 8.830 S Feb 18 2025 MiTek Industries, Inc. Mon Mar 10 12:56:44 Page: 1
ID:YyX6KvsBuqP4JcggfdmtozzWhZ3-RfC?PsB70Hq3NSgPqnL8w3uITXbGKWrCDoi7J4zJC?f

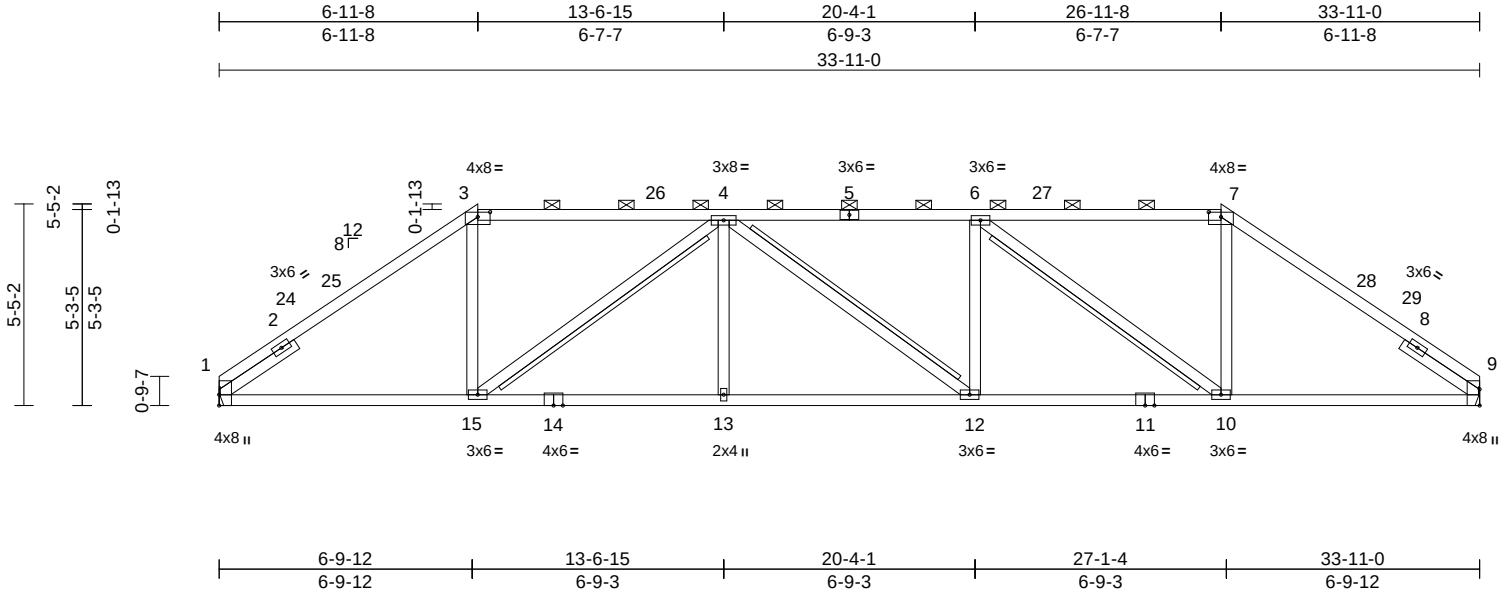

Scale = 1:62

Plate Offsets (X, Y): [3:0-4-0,0-1-9], [7:0-4-0,0-1-9]

Loading	(psf)	Spacing	2-0-0	CSI		DEFL	in	(loc)	l/defl	L/d	PLATES	GRIP
TCLL (roof)	20.0	Plate Grip DOL	1.15	TC	0.84	Vert(LL)	-0.14	10-12	>999	360	MT20	244/190
TCDL	10.0	Lumber DOL	1.15	BC	0.86	Vert(CT)	-0.30	13-15	>999	240		
BCLL	0.0*	Rep Stress Incr	YES	WB	0.47	Horz(CT)	0.13	9	n/a	n/a		
BCDL	10.0	Code	IRC2015/TPI2014	Matrix-MS		Wind(LL)	0.19	10-12	>999	240	Weight: 177 lb	FT = 20%

LUMBER

TOP CHORD	2x4 SP No.2
BOT CHORD	2x4 SP No.2
WEBS	2x4 SP No.3
OTHERS	2x4 SPF No.2(flat)
SLIDER	Left 2x4 SP No.2 -- 2-6-0, Right 2x4 SP No.2 -- 2-6-0

BRACING

TOP CHORD Structural wood sheathing directly applied or 2-2-0 oc purlins, except 2-0-0 oc purlins (3-5-4 max.): 3-7.

BOT CHORD Rigid ceiling directly applied or 7-1-7 oc bracing.

WEBS T-Brace: 2x4 SPF No.2 - 4-15, 6-10, 4-12
Fasten (2X) T and I braces to narrow edge of web with 10d (0.131"x3") nails, 6in o.c.,with 3in minimum end distance.
Brace must cover 90% of web length.

REACTIONS (size) 1= Mechanical, 9= Mechanical
Max Horiz 1=152 (LC 9)
Max Uplift 1=-284 (LC 9), 9=-284 (LC 8)
Max Grav 1=1357 (LC 1), 9=1357 (LC 1)

FORCES (lb) - Maximum Compression/Maximum Tension

TOP CHORD 1-3=-1904/581, 3-4=-1499/547, 4-6=-2280/758, 6-7=-1499/547, 7-9=-1904/581

BOT CHORD 1-15=-460/1518, 13-15=-685/2280, 12-13=-685/2280, 10-12=-644/2280, 9-10=-346/1518

WEBS 7-10=-142/703, 3-15=-142/703, 4-15=-1044/444, 6-10=-1045/443, 4-13=0/276, 4-12=-51/51, 6-12=0/276

NOTES

1) Unbalanced roof live loads have been considered for this design.
2) Wind: ASCE 7-10; Vult=130mph (3-second gust) Vasd=103mph; TCDL=6.0psf; BCDL=6.0psf; h=25ft; Cat. II; Exp C; Enclosed; MWFRS (envelope) exterior zone and C-C Exterior (2) 0-0-0 to 3-4-11, Interior (1) 3-4-11 to 6-11-8, Exterior (2) 6-11-8 to 11-9-1, Interior (1) 11-9-1 to 26-11-8, Exterior (2) 26-11-8 to 31-9-1, Interior (1) 31-9-1 to 33-11-0 zone; cantilever left and right exposed ; end vertical left and right exposed;C-C for members and forces & MWFRS for reactions shown; Lumber DOL=1.60 plate grip DOL=1.60
3) Provide adequate drainage to prevent water ponding.
4) This truss has been designed for a 10.0 psf bottom chord live load nonconcurrent with any other live loads.
5) * This truss has been designed for a live load of 20.0psf on the bottom chord in all areas where a rectangle 3-06-00 tall by 2-00-00 wide will fit between the bottom chord and any other members.
6) Refer to girder(s) for truss to truss connections.
7) Provide mechanical connection (by others) of truss to bearing plate capable of withstanding 284 lb uplift at joint 1 and 284 lb uplift at joint 9.
8) Graphical purlin representation does not depict the size or the orientation of the purlin along the top and/or bottom chord.
9) Warning: Additional permanent and stability bracing for truss system (not part of this component design) is always required.

LOAD CASE(S) Standard

March 12,2025

WARNING - Verify design parameters and READ NOTES ON THIS AND INCLUDED MITEK REFERENCE PAGE MII-7473 rev. 1/2/2023 BEFORE USE.
Design valid for use only with MiTek® connectors. This design is based only upon parameters shown, and is for an individual building component, not a truss system. Before use, the building designer must verify the applicability of design parameters and properly incorporate this design into the overall building design. Bracing indicated is to prevent buckling of individual truss web and/or chord members only. Additional temporary and permanent bracing is always required for stability and to prevent collapse with possible personal injury and property damage. For general guidance regarding the fabrication, storage, delivery, erection and bracing of trusses and truss systems, see **ANSI/TPI1 Quality Criteria and DSB-22** available from Truss Plate Institute (www.tpinst.org) and **BCSI Building Component Safety Information** available from the Structural Building Component Association (www.sbcacomponents.com)

ENGINEERING BY TRENCO A MiTek Affiliate
818 Soundside Road
Edenton, NC 27932

Job	Truss	Truss Type	Qty	Ply	JSJ Builders
4938997	A03	Hip	1	1	I71926195 Job Reference (optional)

Builders FirstSource (Sumter, SC), Sumter, SC - 29153,

Run: 8.83 S Feb 18 2025 Print: 8.830 S Feb 18 2025 MiTek Industries, Inc. Mon Mar 10 12:56:45 Page: 1
ID:I2HHuK6E1H7fQK5pfggtQOzWhbK-RfC?PsB70Hq3NSgPqnL8w3uITXbGKWrCDoi7J4zJC?f

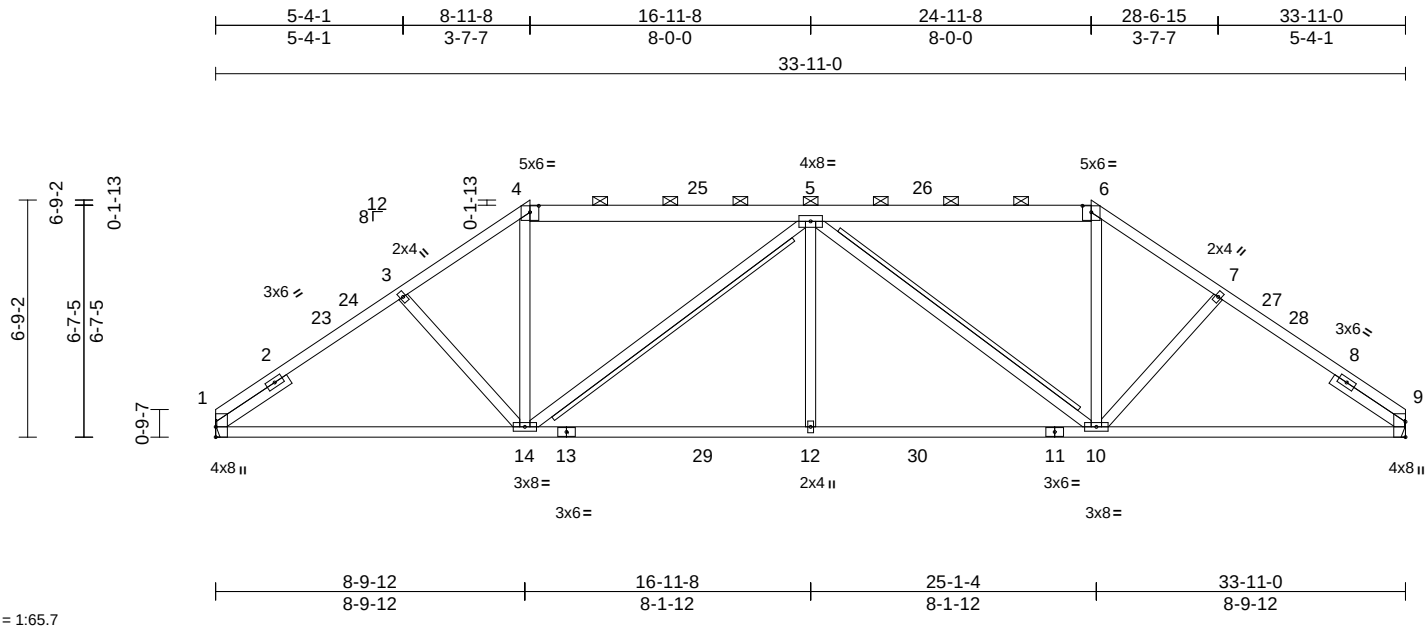

Scale = 1:65.7

Plate Offsets (X, Y): [4:0-3-0,0-2-3], [6:0-3-0,0-2-3]

Loading	(psf)	Spacing	2-0-0	CSI		DEFL	in	(loc)	l/defl	L/d	PLATES	GRIP
TCLL (roof)	20.0	Plate Grip DOL	1.15	TC	0.47	Vert(LL)	-0.13	10-12	>999	360	MT20	244/190
TCDL	10.0	Lumber DOL	1.15	BC	0.85	Vert(CT)	-0.28	12-14	>999	240		
BCLL	0.0*	Rep Stress Incr	YES	WB	0.48	Horz(CT)	0.10	9	n/a	n/a		
BCDL	10.0	Code	IRC2015/TPI2014	Matrix-MS		Wind(LL)	0.12	10-12	>999	240	Weight: 199 lb	FT = 20%

LUMBER

TOP CHORD 2x4 SP No.2 *Except* 4-6:2x6 SP No.2
BOT CHORD 2x4 SP No.2
WEBS 2x4 SP No.3
OTHERS 2x4 SPF No.2(flat)
SLIDER Left 2x4 SP No.2 -- 2-6-0, Right 2x4 SP No.2 -- 2-6-0

BRACING

TOP CHORD Structural wood sheathing directly applied or 3-7-9 oc purlins, except 2-0-0 oc purlins (5-8-7 max.): 4-6.
BOT CHORD Rigid ceiling directly applied or 8-2-13 oc bracing.
WEBS T-Brace: 2x4 SPF No.2 - 5-14, 5-10
Fasten (2X) T and I braces to narrow edge of web with 10d (0.131"x3") nails, 6in o.c.,with 3in minimum end distance.
Brace must cover 90% of web length.

REACTIONS (size) 1= Mechanical, 9= Mechanical
Max Horiz 1=197 (LC 9)
Max Uplift 1=-257 (LC 12), 9=-257 (LC 13)
Max Grav 1=1357 (LC 1), 9=1357 (LC 1)

FORCES (lb) - Maximum Compression/Maximum Tension
TOP CHORD 1-3=-1888/588, 3-4=-1747/590, 4-5=-1429/533, 5-6=-1429/533, 6-7=-1747/590, 7-9=-1888/588
BOT CHORD 1-14=-432/1505, 12-14=-497/1925, 10-12=-497/1925, 9-10=-382/1505
WEBS 3-14=-224/234, 4-14=-141/629, 5-14=-745/344, 5-12=0/387, 5-10=-745/343, 6-10=-141/629, 7-10=-224/235

NOTES

1) Unbalanced roof live loads have been considered for this design.
2) Wind: ASCE 7-10; Vult=130mph (3-second gust) Vasd=103mph; TCDL=6.0psf; BCDL=6.0psf; h=25ft; Cat. II; Exp C; Enclosed; MWFRS (envelope) exterior zone and C-C Exterior (2) 0-0-0 to 3-4-11, Interior (1) 3-4-11 to 8-11-8, Exterior (2) 8-11-8 to 13-9-1, Interior (1) 13-9-1 to 24-11-8, Exterior (2) 24-11-8 to 29-9-1, Interior (1) 29-9-1 to 33-11-0 zone; cantilever left and right exposed ; end vertical left and right exposed;C-C for members and forces & MWFRS for reactions shown; Lumber DOL=1.60 plate grip DOL=1.60
3) Provide adequate drainage to prevent water ponding.
4) This truss has been designed for a 10.0 psf bottom chord live load nonconcurrent with any other live loads.
5) * This truss has been designed for a live load of 20.0psf on the bottom chord in all areas where a rectangle 3-06-00 tall by 2-00-00 wide will fit between the bottom chord and any other members, with BCDL = 10.0psf.
6) Refer to girder(s) for truss to truss connections.
7) Provide mechanical connection (by others) of truss to bearing plate capable of withstanding 257 lb uplift at joint 1 and 257 lb uplift at joint 9.
8) Graphical purlin representation does not depict the size or the orientation of the purlin along the top and/or bottom chord.
9) Warning: Additional permanent and stability bracing for truss system (not part of this component design) is always required.

LOAD CASE(S) Standard

March 12,2025

WARNING - Verify design parameters and READ NOTES ON THIS AND INCLUDED MITEK REFERENCE PAGE MII-7473 rev. 1/2/2023 BEFORE USE.
Design valid for use only with MiTek® connectors. This design is based only upon parameters shown, and is for an individual building component, not a truss system. Before use, the building designer must verify the applicability of design parameters and properly incorporate this design into the overall building design. Bracing indicated is to prevent buckling of individual truss web and/or chord members only. Additional temporary and permanent bracing is always required for stability and to prevent collapse with possible personal injury and property damage. For general guidance regarding the fabrication, storage, delivery, erection and bracing of trusses and truss systems, see **ANSI/TPI1 Quality Criteria and DSB-22** available from Truss Plate Institute (www.tpinst.org) and **BCSI Building Component Safety Information** available from the Structural Building Component Association (www.sbcacomponents.com)

ENGINEERING BY TRENCO A MiTek Affiliate
818 Soundside Road
Edenton, NC 27932

Job	Truss	Truss Type	Qty	Ply	JSJ Builders
4938997	A04	Hip	1	1	I71926196 Job Reference (optional)

Builders FirstSource (Sumter, SC), Sumter, SC - 29153, Run: 8.83 S Feb 18 2025 Print: 8.830 S Feb 18 2025 MiTek Industries, Inc. Mon Mar 10 12:56:45 Page: 1

ID:_07FlA3LPs9LQ213FKv_ymzWhye-RfC?PsB70Hq3NSgPqnL8w3uITXbGKWrCDoi7J4zJC?f

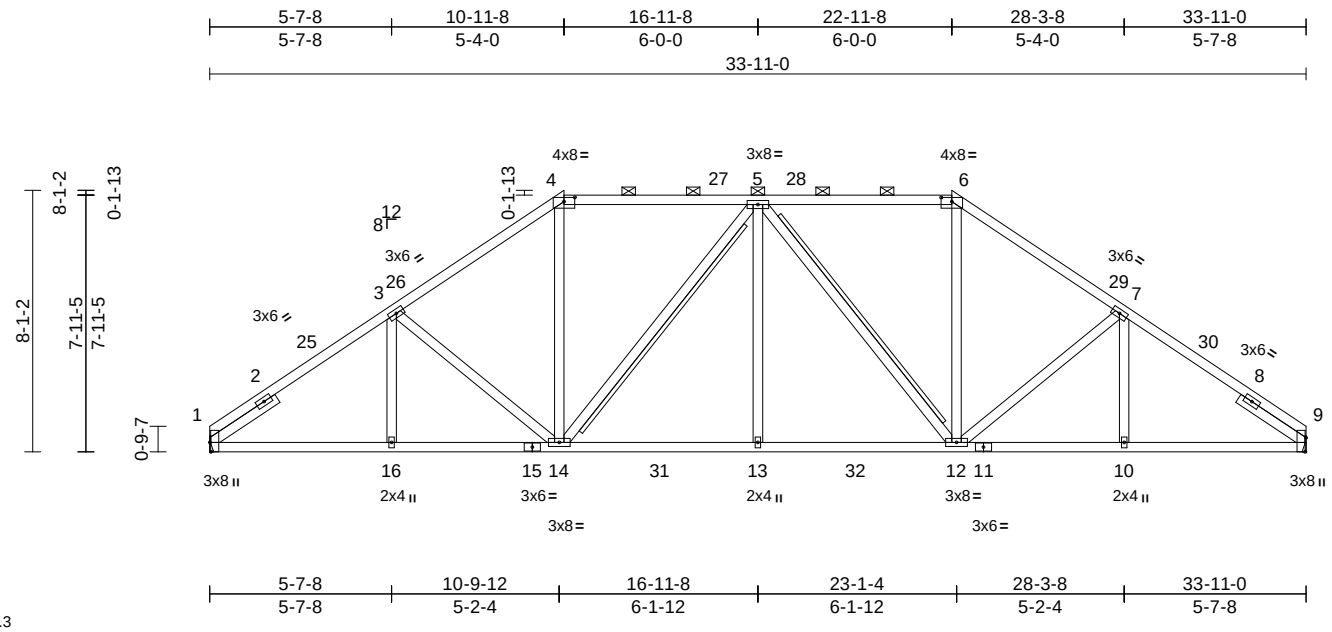

Scale = 1:71.3

Plate Offsets (X, Y): [1:0-3-8,Edge], [4:0-4-0,0-1-9], [6:0-4-0,0-1-9], [9:0-5-4,Edge]

Loading	(psf)	Spacing	2-0-0	CSI		DEFL	in	(loc)	l/defl	L/d	PLATES	GRIP
TCLL (roof)	20.0	Plate Grip DOL	1.15	TC	0.52	Vert(LL)	-0.10	13-14	>999	360	MT20	244/190
TCDL	10.0	Lumber DOL	1.15	BC	0.75	Vert(CT)	-0.21	13-14	>999	240		
BCLL	0.0*	Rep Stress Incr	YES	WB	0.32	Horz(CT)	0.09	9	n/a	n/a		
BCDL	10.0	Code	IRC2015/TPI2014	Matrix-MS		Wind(LL)	0.08	13-14	>999	240	Weight: 207 lb	FT = 20%

LUMBER

TOP CHORD 2x4 SP No.2
BOT CHORD 2x4 SP No.2
WEBS 2x4 SP No.3
OTHERS 2x4 SPF No.2(flat)
SLIDER Left 2x4 SP No.2 -- 2-6-0, Right 2x4 SP No.2 -- 2-6-0

BRACING

TOP CHORD Structural wood sheathing directly applied or 3-5-11 oc purlins, except 2-0-0 oc purlins (4-7-10 max.): 4-6.
BOT CHORD Rigid ceiling directly applied or 9-4-4 oc bracing.
WEBS T-Brace: 2x4 SPF No.2 - 5-14, 5-12
Fasten (2X) T and I braces to narrow edge of web with 10d (0.131"x3") nails, 6in o.c.,with 3in minimum end distance.
Brace must cover 90% of web length.

REACTIONS (size) 1= Mechanical, 9= Mechanical
Max Horiz 1=241 (LC 9)
Max Uplift 1=-283 (LC 12), 9=-283 (LC 13)
Max Grav 1=1357 (LC 1), 9=1357 (LC 1)

FORCES (lb) - Maximum Compression/Maximum Tension
TOP CHORD 1-3=-1904/563, 3-4=-1677/579, 4-5=-1325/541, 5-6=-1325/541, 6-7=-1677/579, 7-9=-1904/563
BOT CHORD 1-16=-385/1522, 14-16=-385/1522, 13-14=-314/1538, 12-13=-314/1538, 10-12=-364/1522, 9-10=-364/1522
WEBS 3-16=0/163, 3-14=-387/273, 4-14=-129/582, 5-14=-471/249, 5-13=0/327, 5-12=-471/249, 6-12=-129/582, 7-12=-387/274, 7-10=0/163

NOTES

1) Unbalanced roof live loads have been considered for this design.
2) Wind: ASCE 7-10; Vult=130mph (3-second gust) Vasd=103mph; TCDL=6.0psf; BCDL=6.0psf; h=25ft; Cat. II; Exp C; Enclosed; MWFRS (envelope) exterior zone and C-C Exterior (2) 0-0-0 to 3-4-11, Interior (1) 3-4-11 to 10-11-8, Exterior (2) 10-11-8 to 15-9-1, Interior (1) 15-9-1 to 22-11-8, Exterior (2) 22-11-8 to 27-9-1, Interior (1) 27-9-1 to 33-11-0 zone; cantilever left and right exposed ; end vertical left and right exposed;C-C for members and forces & MWFRS for reactions shown; Lumber DOL=1.60 plate grip DOL=1.60
3) Provide adequate drainage to prevent water ponding.
4) This truss has been designed for a 10.0 psf bottom chord live load nonconcurrent with any other live loads.
5) * This truss has been designed for a live load of 20.0psf on the bottom chord in all areas where a rectangle 3-06-00 tall by 2-00-00 wide will fit between the bottom chord and any other members, with BCDL = 10.0psf.
6) Refer to girder(s) for truss to truss connections.
7) Provide mechanical connection (by others) of truss to bearing plate capable of withstanding 283 lb uplift at joint 1 and 283 lb uplift at joint 9.
8) Graphical purlin representation does not depict the size or the orientation of the purlin along the top and/or bottom chord.
9) Warning: Additional permanent and stability bracing for truss system (not part of this component design) is always required.

LOAD CASE(S) Standard

March 12,2025

WARNING - Verify design parameters and READ NOTES ON THIS AND INCLUDED MITEK REFERENCE PAGE MII-7473 rev. 1/2/2023 BEFORE USE.
Design valid for use only with MiTek® connectors. This design is based only upon parameters shown, and is for an individual building component, not a truss system. Before use, the building designer must verify the applicability of design parameters and properly incorporate this design into the overall building design. Bracing indicated is to prevent buckling of individual truss web and/or chord members only. Additional temporary and permanent bracing is always required for stability and to prevent collapse with possible personal injury and property damage. For general guidance regarding the fabrication, storage, delivery, erection and bracing of trusses and truss systems, see **ANSI/TPI1 Quality Criteria and DSB-22** available from Truss Plate Institute (www.tpinst.org) and **BCSI Building Component Safety Information** available from the Structural Building Component Association (www.sbcacomponents.com)

ENGINEERING BY TRENCO A MiTek Affiliate
818 Soundside Road
Edenton, NC 27932

Job	Truss	Truss Type	Qty	Ply	JSJ Builders
4938997	A05	Hip	1	1	I71926197 Job Reference (optional)

Builders FirstSource (Sumter, SC), Sumter, SC - 29153, Run: 8.83 S Feb 18 2025 Print: 8.830 S Feb 18 2025 MiTek Industries, Inc. Mon Mar 10 12:56:45 Page: 1

ID:zgU7w511QlSPj_1jnzt3?qzWhzz-RfC?PsB70Hq3NSgPqnL8w3uITXbGKWrCDoi7J4zJC?f

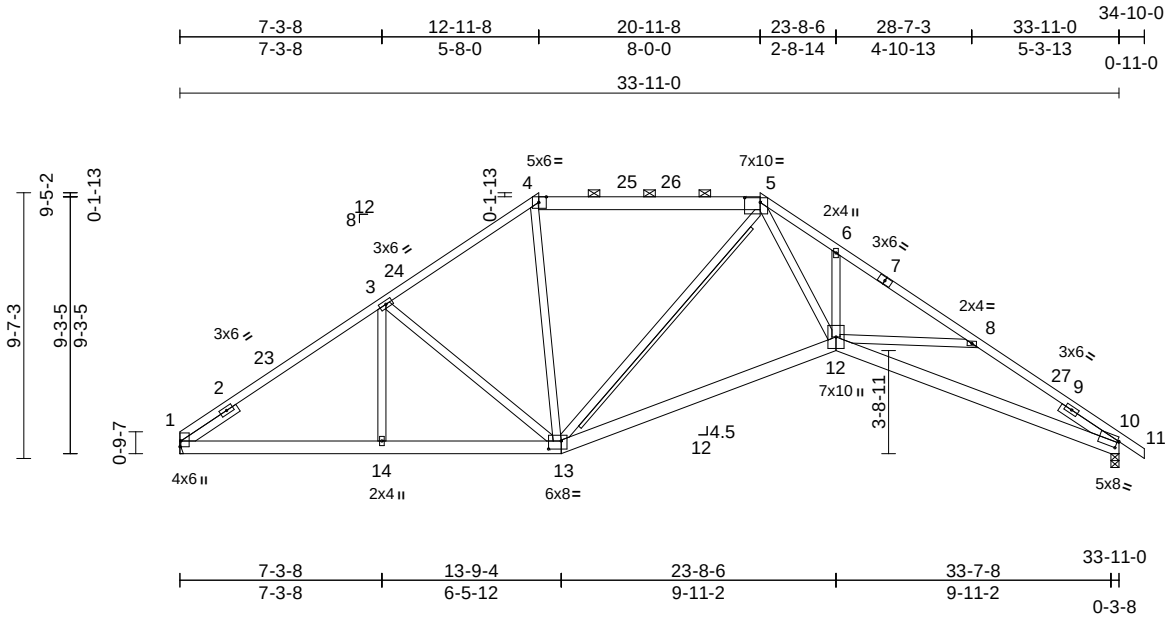

Scale = 1:83.2

Plate Offsets (X, Y): [1:Edge,0-0-6], [4:0-3-5,Edge], [5:0-6-12,0-2-0], [10:0-0-11,0-3-2], [13:0-5-8,0-3-8]

Loading	(psf)	Spacing	2-0-0	CSI		DEFL	in	(loc)	l/defl	L/d	PLATES	GRIP
TCLL (roof)	20.0	Plate Grip DOL	1.15	TC	0.56	Vert(LL)	-0.19	12-13	>999	360	MT20	244/190
TCDL	10.0	Lumber DOL	1.15	BC	0.36	Vert(CT)	-0.40	12-13	>999	240		
BCLL	0.0*	Rep Stress Incr	YES	WB	0.96	Horz(CT)	0.24	10	n/a	n/a		
BCDL	10.0	Code	IRC2015/TPI2014	Matrix-MS		Wind(LL)	0.16	12-13	>999	240	Weight: 226 lb	FT = 20%

LUMBER

TOP CHORD 2x4 SP 2400F 2.0E or 2x4 SP DSS or 2x4 SP SS *Except* 4-5:2x6 SP No.2
BOT CHORD 2x6 SP 2400F 2.0E or 2x6 SP DSS
WEBS 2x4 SP No.3
OTHERS 2x4 SPF No.2(flat)
SLIDER Left 2x4 SP No.2 -- 2-4-9, Right 2x4 SP No.2 -- 2-6-0

BRACING

TOP CHORD Structural wood sheathing directly applied or 2-9-8 oc purlins, except 2-0-0 oc purlins (5-6-0 max.): 4-5.
BOT CHORD Rigid ceiling directly applied or 9-9-9 oc bracing.
WEBS T-Brace: 2x4 SPF No.2 - 5-13
Fasten (2X) T and I braces to narrow edge of web with 10d (0.131"x3") nails, 6in o.c.,with 3in minimum end distance.
Brace must cover 90% of web length.

REACTIONS (size) 1= Mechanical, 10=0-3-8
Max Horiz 1=-299 (LC 8)
Max Uplift 1=-304 (LC 12), 10=-335 (LC 13)
Max Grav 1=1353 (LC 1), 10=1410 (LC 1)

FORCES (lb) - Maximum Compression/Maximum Tension
TOP CHORD 1-3=-1886/554, 3-4=-1539/555, 4-5=-1292/532, 5-6=-3369/945, 6-8=-3423/809, 8-10=-3674/985, 10-11=0/31
BOT CHORD 1-14=-385/1498, 13-14=-385/1498, 12-13=-246/1860, 10-12=-744/3165
WEBS 3-14=0/228, 3-13=-529/328, 4-13=-69/469, 6-12=-288/271, 8-12=-349/403, 5-13=-800/132, 5-12=-474/2329

NOTES

1) Unbalanced roof live loads have been considered for this design.
2) Wind: ASCE 7-10; Vult=130mph (3-second gust) Vasd=103mph; TCDL=6.0psf; BCDL=6.0psf; h=25ft; Cat. II; Exp C; Enclosed; MWFRS (envelope) exterior zone and C-C Exterior (2) 0-0-12 to 3-5-7, Interior (1) 3-5-7 to 12-11-8, Exterior (2) 12-11-8 to 17-9-1, Interior (1) 17-9-1 to 20-11-8, Exterior (2) 20-11-8 to 25-9-1, Interior (1) 25-9-1 to 34-10-0 zone; cantilever left and right exposed ; end vertical left and right exposed;C-C for members and forces & MWFRS for reactions shown; Lumber DOL=1.60 plate grip DOL=1.60
3) Provide adequate drainage to prevent water ponding.
4) This truss has been designed for a 10.0 psf bottom chord live load nonconcurrent with any other live loads.
5) * This truss has been designed for a live load of 20.0psf on the bottom chord in all areas where a rectangle 3-06-00 tall by 2-00-00 wide will fit between the bottom chord and any other members.
6) Bearings are assumed to be: , Joint 10 SP 2400F 2.0E or DSS .
7) Refer to girder(s) for truss to truss connections.
8) Bearing at joint(s) 10 considers parallel to grain value using ANSI/TPI 1 angle to grain formula. Building designer should verify capacity of bearing surface.
9) Provide mechanical connection (by others) of truss to bearing plate capable of withstanding 304 lb uplift at joint 1 and 335 lb uplift at joint 10.
10) Graphical purlin representation does not depict the size or the orientation of the purlin along the top and/or bottom chord.
11) Warning: Additional permanent and stability bracing for truss system (not part of this component design) is always required.

LOAD CASE(S) Standard

March 12,2025

WARNING - Verify design parameters and READ NOTES ON THIS AND INCLUDED MITEK REFERENCE PAGE MII-7473 rev. 1/2/2023 BEFORE USE.
Design valid for use only with MiTek® connectors. This design is based only upon parameters shown, and is for an individual building component, not a truss system. Before use, the building designer must verify the applicability of design parameters and properly incorporate this design into the overall building design. Bracing indicated is to prevent buckling of individual truss web and/or chord members only. Additional temporary and permanent bracing is always required for stability and to prevent collapse with possible personal injury and property damage. For general guidance regarding the fabrication, storage, delivery, erection and bracing of trusses and truss systems, see **ANSI/TPI1 Quality Criteria and DSB-22** available from Truss Plate Institute (www.tpinst.org) and **BCSI Building Component Safety Information** available from the Structural Building Component Association (www.sbcacomponents.com)

ENGINEERING BY TRENCO A MiTek Affiliate
818 Soundside Road
Edenton, NC 27932

Job	Truss	Truss Type	Qty	Ply	JSJ Builders
4938997	A06	Hip	1	1	I71926198 Job Reference (optional)

Builders FirstSource (Sumter, SC), Sumter, SC - 29153, Run: 8.83 S Feb 18 2025 Print: 8.830 S Feb 18 2025 MiTek Industries, Inc. Mon Mar 10 12:56:46 Page: 1
ID:JBYAsVECGGoPzEjH6uDL?dzWi0H-RfC?PsB70Hq3NSgPqnL8w3uITXbGKWrCDoi7J4zJC?f

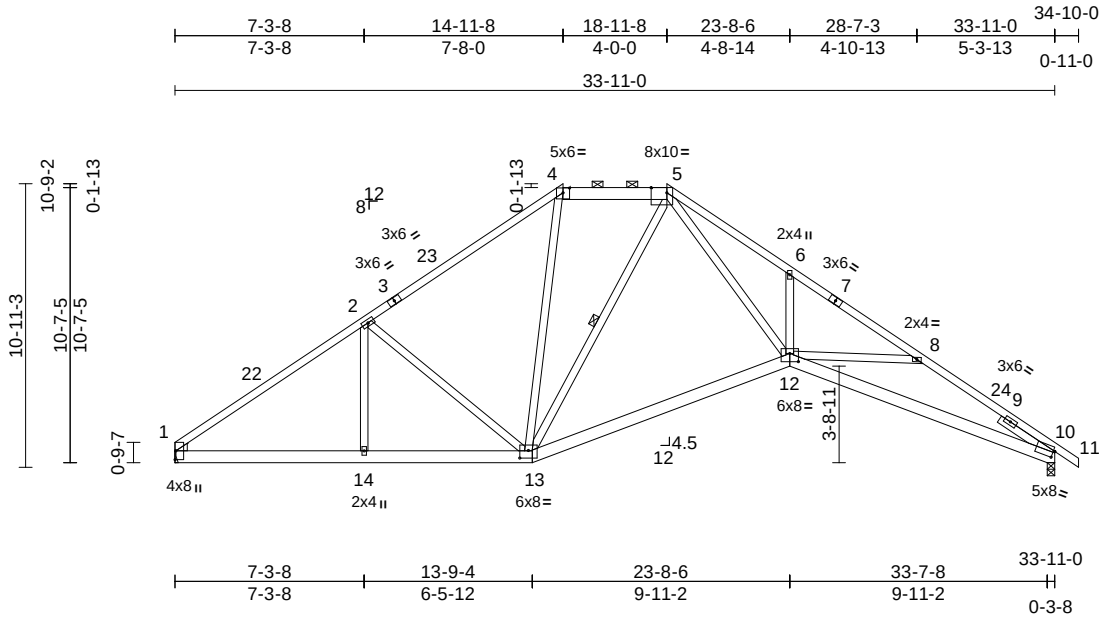

Scale = 1:88.8

Plate Offsets (X, Y): [1:Edge,0-0-6], [4:0-3-0,0-2-3], [5:0-7-5,Edge], [10:0-0-11,0-3-2], [12:0-4-0,0-3-12], [13:0-4-0,0-3-8]

Loading	(psf)	Spacing	2-0-0	CSI		DEFL	in	(loc)	l/defl	L/d	PLATES	GRIP
TCLL (roof)	20.0	Plate Grip DOL	1.15	TC	0.56	Vert(LL)	-0.20	12-13	>999	360	MT20	244/190
TCDL	10.0	Lumber DOL	1.15	BC	0.36	Vert(CT)	-0.43	12-13	>937	240		
BCLL	0.0*	Rep Stress Incr	YES	WB	0.77	Horz(CT)	0.25	10	n/a	n/a		
BCDL	10.0	Code	IRC2015/TPI2014	Matrix-MS		Wind(LL)	0.19	12-13	>999	240	Weight: 226 lb	FT = 20%

LUMBER

TOP CHORD 2x4 SP 2400F 2.0E or 2x4 SP DSS or 2x4 SP SS *Except* 4-5:2x6 SP No.2
BOT CHORD 2x6 SP 2400F 2.0E or 2x6 SP DSS
WEBS 2x4 SP No.3 *Except* 12-5:2x4 SP No.2
WEDGE Left: 2x4 SP No.3
SLIDER Right 2x4 SP No.2 -- 2-6-0

BRACING

TOP CHORD Structural wood sheathing directly applied or 2-9-9 oc purlins, except 2-0-0 oc purlins (6-0-0 max.): 4-5.
BOT CHORD Rigid ceiling directly applied or 10-0-0 oc bracing.
WEBS 1 Row at midpt 5-13

REACTIONS (size) 1= Mechanical, 10=0-3-8
Max Horiz 1=-344 (LC 10)
Max Uplift 1=-323 (LC 12), 10=-353 (LC 13)
Max Grav 1=1356 (LC 1), 10=1412 (LC 1)

FORCES (lb) - Maximum Compression/Maximum Tension
TOP CHORD 1-2=-1945/542, 2-4=-1543/551, 4-5=-1281/538, 5-6=-3454/968, 6-8=-3438/781, 8-10=-3673/939, 10-11=0/31
BOT CHORD 1-14=-457/1564, 13-14=-457/1564, 12-13=-140/1455, 10-12=-703/3163
WEBS 6-12=-409/340, 8-12=-311/380, 2-14=0/222, 5-12=-534/2522, 4-13=-113/504, 5-13=-555/101, 2-13=-613/386

NOTES

1) Unbalanced roof live loads have been considered for this design.
2) Wind: ASCE 7-10; Vult=130mph (3-second gust) Vasd=103mph; TCDL=6.0psf; BCDL=6.0psf; h=25ft; Cat. II; Exp C; Enclosed; MWFRS (envelope) exterior zone and C-C Exterior (2) 0-0-0 to 3-4-11, Interior (1) 3-4-11 to 14-11-8, Exterior (2) 14-11-8 to 23-8-6, Interior (1) 23-8-6 to 34-10-0 zone; cantilever left and right exposed ; end vertical left and right exposed;C-C for members and forces & MWFRS for reactions shown; Lumber DOL=1.60 plate grip DOL=1.60
3) Provide adequate drainage to prevent water ponding.
4) This truss has been designed for a 10.0 psf bottom chord live load nonconcurrent with any other live loads.
5) * This truss has been designed for a live load of 20.0psf on the bottom chord in all areas where a rectangle 3-06-00 tall by 2-00-00 wide will fit between the bottom chord and any other members.
6) Bearings are assumed to be: , Joint 10 SP 2400F 2.0E or DSS .
7) Refer to girder(s) for truss to truss connections.
8) Bearing at joint(s) 10 considers parallel to grain value using ANSI/TPI 1 angle to grain formula. Building designer should verify capacity of bearing surface.
9) Provide mechanical connection (by others) of truss to bearing plate capable of withstanding 323 lb uplift at joint 1 and 353 lb uplift at joint 10.
10) Graphical purlin representation does not depict the size or the orientation of the purlin along the top and/or bottom chord.

LOAD CASE(S) Standard

March 12,2025

WARNING - Verify design parameters and READ NOTES ON THIS AND INCLUDED MITEK REFERENCE PAGE MII-7473 rev. 1/2/2023 BEFORE USE.
Design valid for use only with MiTek® connectors. This design is based only upon parameters shown, and is for an individual building component, not a truss system. Before use, the building designer must verify the applicability of design parameters and properly incorporate this design into the overall building design. Bracing indicated is to prevent buckling of individual truss web and/or chord members only. Additional temporary and permanent bracing is always required for stability and to prevent collapse with possible personal injury and property damage. For general guidance regarding the fabrication, storage, delivery, erection and bracing of trusses and truss systems, see **ANSI/TPI1 Quality Criteria and DSB-22** available from Truss Plate Institute (www.tpinst.org) and **BCSI Building Component Safety Information** available from the Structural Building Component Association (www.sbcacomponents.com)

ENGINEERING BY TRENCO A MiTek Affiliate
818 Soundside Road
Edenton, NC 27932

Job	Truss	Truss Type	Qty	Ply	JSJ Builders
4938997	A07	Piggyback Base	1	1	I71926199 Job Reference (optional)

Builders FirstSource (Sumter, SC), Sumter, SC - 29153, Run: 8.83 S Feb 18 2025 Print: 8.830 S Feb 18 2025 MiTek Industries, Inc. Mon Mar 10 12:56:46 Page: 1

ID:0GSNawXJMXsPuOdGCAZqDnzWhvS-RfC?PsB70Hq3NSgPqnL8w3uITXbGKWrCDoi7J4zJC?f

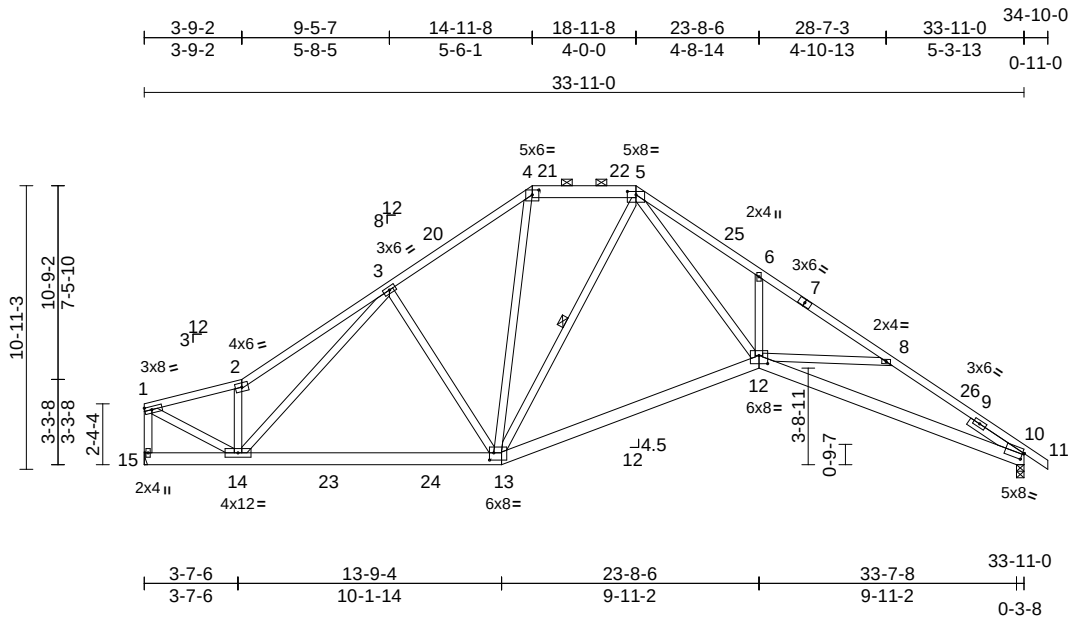

Scale = 1:88.8

Plate Offsets (X, Y): [4:0-3-0,0-2-3], [5:0-4-0,0-1-9], [10:0-0-11,0-3-2], [12:0-4-0,0-3-12], [13:0-1-15,0-3-5]

Loading	(psf)	Spacing	2-0-0	CSI		DEFL	in	(loc)	l/defl	L/d	PLATES	GRIP
TCLL (roof)	20.0	Plate Grip DOL	1.15	TC	0.55	Vert(LL)	-0.20	12-13	>999	360	MT20	244/190
TCDL	10.0	Lumber DOL	1.15	BC	0.36	Vert(CT)	-0.43	12-13	>936	240		
BCLL	0.0*	Rep Stress Incr	YES	WB	0.70	Horz(CT)	0.25	10	n/a	n/a		
BCDL	10.0	Code	IRC2015/TPI2014	Matrix-MS		Wind(LL)	0.19	12-13	>999	240	Weight: 241 lb	FT = 20%

LUMBER

TOP CHORD 2x4 SP 2400F 2.0E or 2x4 SP DSS or 2x4 SP SS *Except* 4-5:2x6 SP No.2

BOT CHORD 2x6 SP 2400F 2.0E or 2x6 SP DSS

WEBS 2x4 SP No.3 *Except* 15-1,12-5:2x4 SP No.2

SLIDER Right 2x4 SP No.2 -- 2-6-0

BRACING

TOP CHORD Structural wood sheathing directly applied or 2-9-14 oc purlins, except end verticals, and 2-0-0 oc purlins (6-0-0 max.): 4-5.

BOT CHORD Rigid ceiling directly applied or 10-0-0 oc bracing.

WEBS 1 Row at midpt 5-13

REACTIONS (size) 10=0-3-8, 15= Mechanical

Max Horiz 15=320 (LC 11)

Max Uplift 10=-350 (LC 13), 15=-323 (LC 12)

Max Grav 10=1407 (LC 1), 15=1350 (LC 1)

FORCES (lb) - Maximum Compression/Maximum Tension

TOP CHORD 1-2=-1559/391, 2-3=-1918/606, 3-4=-1530/562, 4-5=-1238/505, 1-15=-1319/360, 5-6=-3456/931, 6-8=-3416/743, 8-10=-3654/906, 10-11=0/31

BOT CHORD 14-15=-311/290, 13-14=-349/1418, 12-13=-129/1432, 10-12=-675/3147

WEBS 1-14=-381/1679, 6-12=-451/351, 8-12=-317/380, 5-12=-512/2545, 4-13=-157/613, 5-13=-557/94, 2-14=-900/398, 3-13=-508/377, 3-14=-139/360

NOTES

1) Unbalanced roof live loads have been considered for this design.
2) Wind: ASCE 7-10; Vult=130mph (3-second gust) Vasd=103mph; TCDL=6.0psf; BCDL=6.0psf; h=25ft; Cat. II; Exp C; Enclosed; MWFRS (envelope) exterior zone and C-C Exterior (2) 8-2-4 to 11-9-10, Interior (1) 11-9-10 to 23-0-0, Exterior (2) 23-0-0 to 26-4-11, Interior (1) 26-4-11 to 27-0-0, Exterior (2) 27-0-0 to 30-4-11, Interior (1) 30-4-11 to 42-10-8 zone; cantilever left and right exposed ; end vertical right exposed;C-C for members and forces & MWFRS for reactions shown; Lumber DOL=1.60 plate grip DOL=1.60
3) Provide adequate drainage to prevent water ponding.
4) This truss has been designed for a 10.0 psf bottom chord live load nonconcurrent with any other live loads.
5) * This truss has been designed for a live load of 20.0psf on the bottom chord in all areas where a rectangle 3-06-00 tall by 2-00-00 wide will fit between the bottom chord and any other members, with BCDL = 10.0psf.
6) Bearings are assumed to be: , Joint 10 SP 2400F 2.0E or DSS .
7) Refer to girder(s) for truss to truss connections.
8) Bearing at joint(s) 10 considers parallel to grain value using ANSI/TPI 1 angle to grain formula. Building designer should verify capacity of bearing surface.
9) Provide mechanical connection (by others) of truss to bearing plate capable of withstanding 323 lb uplift at joint 15 and 350 lb uplift at joint 10.
10) Graphical purlin representation does not depict the size or the orientation of the purlin along the top and/or bottom chord.

LOAD CASE(S) Standard

March 12,2025

WARNING - Verify design parameters and READ NOTES ON THIS AND INCLUDED MITEK REFERENCE PAGE MII-7473 rev. 1/2/2023 BEFORE USE.
Design valid for use only with MiTek® connectors. This design is based only upon parameters shown, and is for an individual building component, not a truss system. Before use, the building designer must verify the applicability of design parameters and properly incorporate this design into the overall building design. Bracing indicated is to prevent buckling of individual truss web and/or chord members only. Additional temporary and permanent bracing is always required for stability and to prevent collapse with possible personal injury and property damage. For general guidance regarding the fabrication, storage, delivery, erection and bracing of trusses and truss systems, see **ANSI/TPI1 Quality Criteria and DSB-22** available from Truss Plate Institute (www.tpinst.org) and **BCSI Building Component Safety Information** available from the Structural Building Component Association (www.sbcacomponents.com)

ENGINEERING BY TRENCO A MiTek Affiliate
818 Soundside Road
Edenton, NC 27932

Job	Truss	Truss Type	Qty	Ply	JSJ Builders
4938997	A08	Piggyback Base	3	1	I71926200 Job Reference (optional)

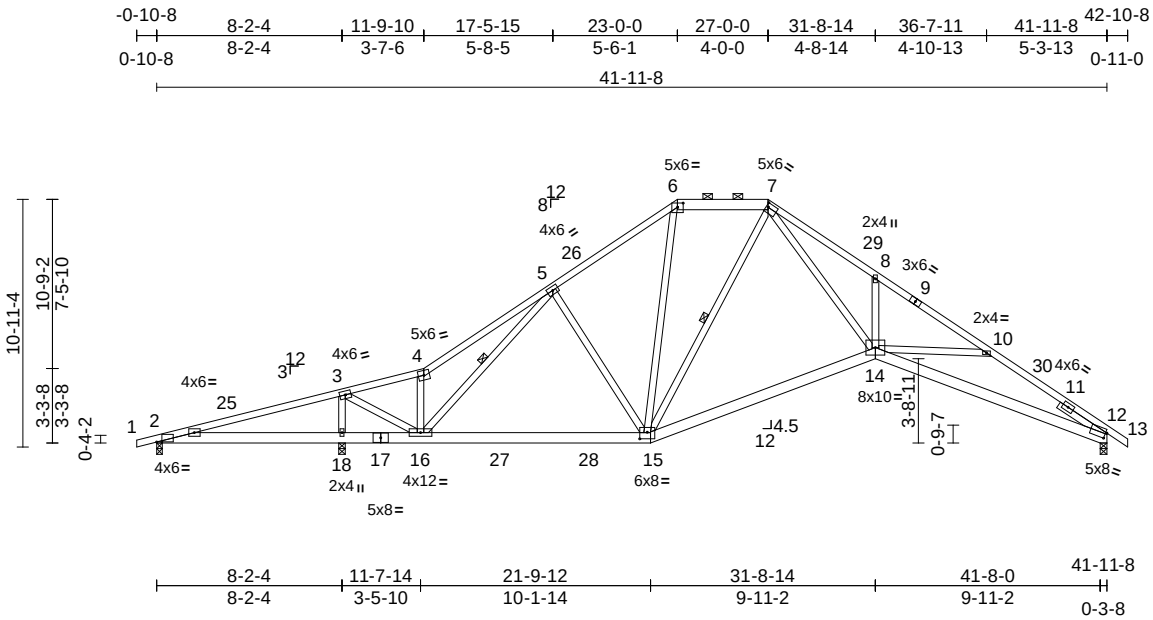

Scale = 1:101.7

Plate Offsets (X, Y): [2:0-2-12,0-0-2], [6:0-3-0,0-2-3], [7:0-1-0,0-2-4], [12:0-0-11,0-3-2], [15:0-4-0,0-3-8]

Loading	(psf)	Spacing	2-0-0	CSI		DEFL	in	(loc)	l/defl	L/d	PLATES	GRIP
TCLL (roof)	20.0	Plate Grip DOL	1.15	TC	0.48	Vert(LL)	-0.19	14-15	>999	360	MT20	244/190
TCDL	10.0	Lumber DOL	1.15	BC	0.33	Vert(CT)	-0.40	14-15	>999	240		
BCLL	0.0*	Rep Stress Incr	YES	WB	0.98	Horz(CT)	0.22	12	n/a	n/a		
BCDL	10.0	Code	IRC2015/TPI2014	Matrix-MS		Wind(LL)	0.17	14-15	>999	240	Weight: 274 lb	FT = 20%

LUMBER

TOP CHORD 2x4 SP 2400F 2.0E or 2x4 SP DSS or 2x4 SP SS *Except* 6-7:2x6 SP No.2
BOT CHORD 2x6 SP 2400F 2.0E or 2x6 SP DSS
WEBS 2x4 SP No.3
SLIDER Right 2x4 SP No.2 -- 2-6-0

BRACING

TOP CHORD Structural wood sheathing directly applied or 3-0-14 oc purlins, except 2-0-0 oc purlins (6-0-0 max.): 6-7.
BOT CHORD Rigid ceiling directly applied or 6-0-0 oc bracing.
WEBS 1 Row at midpt 5-16, 7-15

REACTIONS (size) 2=0-3-0, 12=0-3-8, 18=0-3-8
Max Horiz 2=364 (LC 11)
Max Uplift 2=-277 (LC 8), 12=-340 (LC 13), 18=-575 (LC 12)
Max Grav 2=82 (LC 23), 12=1317 (LC 1), 18=2134 (LC 1)

FORCES (lb) - Maximum Compression/Maximum Tension
TOP CHORD 1-2=0/15, 2-3=-363/1292, 3-4=-663/123, 4-5=-811/239, 5-6=-1318/494, 6-7=-1075/467, 7-8=-3141/848, 8-10=-3103/656, 10-12=-3367/825, 12-13=0/31
BOT CHORD 2-18=-1269/424, 16-18=-1269/424, 15-16=-260/1130, 14-15=-82/1262, 12-14=-606/2903
WEBS 3-18=-1830/524, 8-14=-446/350, 10-14=-346/384, 4-16=-484/250, 3-16=-389/2062, 5-15=-273/308, 5-16=-713/265, 6-15=-143/495, 7-15=-584/99, 7-14=-471/2368

NOTES

1) Unbalanced roof live loads have been considered for this design.
2) Wind: ASCE 7-10; Vult=130mph (3-second gust) Vasd=103mph; TCDL=6.0psf; BCDL=6.0psf; h=25ft; Cat. II; Exp C; Enclosed; MWFRS (envelope) exterior zone and C-C Exterior (2) -0-10-8 to 3-3-14, Interior (1) 3-3-14 to 23-0-0, Exterior (2) 23-0-0 to 31-2-6, Interior (1) 31-2-6 to 42-10-8 zone; cantilever left and right exposed ; end vertical left and right exposed; porch left exposed;C-C for members and forces & MWFRS for reactions shown; Lumber DOL=1.60 plate grip DOL=1.60
3) Provide adequate drainage to prevent water ponding.
4) This truss has been designed for a 10.0 psf bottom chord live load nonconcurrent with any other live loads.
5) * This truss has been designed for a live load of 20.0psf on the bottom chord in all areas where a rectangle 3-06-00 tall by 2-00-00 wide will fit between the bottom chord and any other members, with BCDL = 10.0psf.
6) All bearings are assumed to be SP 2400F 2.0E or DSS .
7) Bearing at joint(s) 12 considers parallel to grain value using ANSI/TPI 1 angle to grain formula. Building designer should verify capacity of bearing surface.
8) Provide mechanical connection (by others) of truss to bearing plate capable of withstanding 277 lb uplift at joint 2, 340 lb uplift at joint 12 and 575 lb uplift at joint 18.
9) Graphical purlin representation does not depict the size or the orientation of the purlin along the top and/or bottom chord.

LOAD CASE(S) Standard

March 12,2025

WARNING - Verify design parameters and READ NOTES ON THIS AND INCLUDED MITEK REFERENCE PAGE MII-7473 rev. 1/2/2023 BEFORE USE.
Design valid for use only with MiTek® connectors. This design is based only upon parameters shown, and is for an individual building component, not a truss system. Before use, the building designer must verify the applicability of design parameters and properly incorporate this design into the overall building design. Bracing indicated is to prevent buckling of individual truss web and/or chord members only. Additional temporary and permanent bracing is always required for stability and to prevent collapse with possible personal injury and property damage. For general guidance regarding the fabrication, storage, delivery, erection and bracing of trusses and truss systems, see **ANSI/TPI1 Quality Criteria and DSB-22** available from Truss Plate Institute (www.tpinst.org) and **BCSI Building Component Safety Information** available from the Structural Building Component Association (www.sbcacomponents.com)

ENGINEERING BY TRENCO A MiTek Affiliate
818 Soundside Road
Edenton, NC 27932

Job	Truss	Truss Type	Qty	Ply	JSJ Builders
4938997	A09	Piggyback Base	1	1	I71926201 Job Reference (optional)

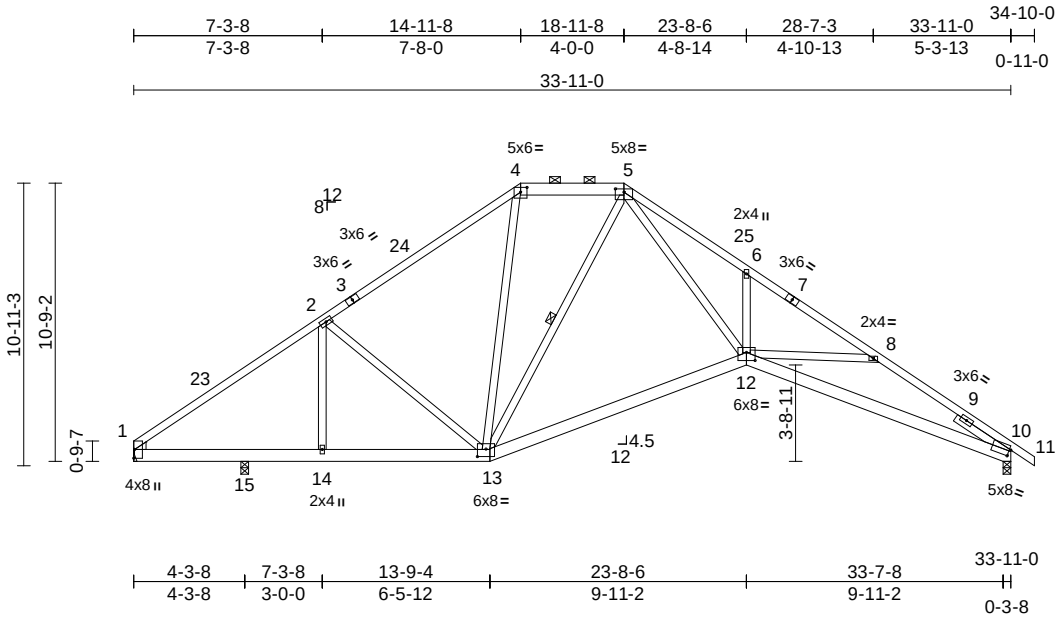

Scale = 1:89.1

Plate Offsets (X, Y): [1:Edge,0-0-6], [4:0-3-0,0-2-3], [5:0-4-0,0-1-9], [10:0-0-11,0-3-2], [12:0-4-0,0-3-12], [13:0-4-0,0-3-8]

Loading	(psf)	Spacing	2-0-0	CSI		DEFL	in	(loc)	l/defl	L/d	PLATES	GRIP
TCLL (roof)	20.0	Plate Grip DOL	1.15	TC	0.51	Vert(LL)	-0.19	12-13	>999	360	MT20	244/190
TCDL	10.0	Lumber DOL	1.15	BC	0.34	Vert(CT)	-0.41	12-13	>868	240		
BCLL	0.0*	Rep Stress Incr	YES	WB	0.60	Horz(CT)	0.24	10	n/a	n/a		
BCDL	10.0	Code	IRC2015/TPI2014	Matrix-MS		Wind(LL)	0.18	12-13	>999	240	Weight: 227 lb	FT = 20%

LUMBER

TOP CHORD 2x4 SP 2400F 2.0E or 2x4 SP DSS or 2x4 SP SS *Except* 4-5:2x6 SP No.2
BOT CHORD 2x6 SP 2400F 2.0E or 2x6 SP DSS
WEBS 2x4 SP No.3 *Except* 12-5:2x4 SP No.2
WEDGE Left: 2x4 SP No.3
SLIDER Right 2x4 SP No.2 -- 2-6-0

BRACING

TOP CHORD Structural wood sheathing directly applied or 2-11-13 oc purlins, except 2-0-0 oc purlins (6-0-0 max.): 4-5.
BOT CHORD Rigid ceiling directly applied or 10-0-0 oc bracing.
WEBS 1 Row at midpt 5-13

REACTIONS (size) 1= Mechanical, 10=0-3-8, 15=0-3-8
Max Horiz 1=-346 (LC 8)
Max Uplift 1=-200 (LC 12), 10=-344 (LC 13), 15=-140 (LC 12)
Max Grav 1=915 (LC 1), 10=1348 (LC 1), 15=505 (LC 1)

FORCES (lb) - Maximum Compression/Maximum Tension
TOP CHORD 1-2=-1487/416, 2-4=-1381/505, 4-5=-1149/505, 5-6=-3253/903, 6-8=-3214/710, 8-10=-3468/874, 10-11=0/31
BOT CHORD 1-15=-350/1198, 14-15=-350/1198, 13-14=-350/1198, 12-13=-103/1322, 10-12=-648/2988
WEBS 4-13=-104/415, 6-12=-450/351, 5-13=-566/97, 5-12=-501/2431, 2-13=-284/299, 8-12=-335/382, 2-14=-292/169

NOTES

1) Unbalanced roof live loads have been considered for this design.
2) Wind: ASCE 7-10; Vult=130mph (3-second gust) Vasd=103mph; TCDL=6.0psf; BCDL=6.0psf; h=25ft; Cat. II; Exp C; Enclosed; MWFRS (envelope) exterior zone and C-C Exterior (2) 0-0-0 to 3-0-0, Interior (1) 3-0-0 to 14-11-8, Exterior (2) 14-11-8 to 23-2-7, Interior (1) 23-2-7 to 34-10-0 zone; cantilever left and right exposed ; end vertical right exposed;C-C for members and forces & MWFRS for reactions shown; Lumber DOL=1.60 plate grip DOL=1.60
3) Provide adequate drainage to prevent water ponding.
4) This truss has been designed for a 10.0 psf bottom chord live load nonconcurrent with any other live loads.
5) * This truss has been designed for a live load of 20.0psf on the bottom chord in all areas where a rectangle 3-06-00 tall by 2-00-00 wide will fit between the bottom chord and any other members.
6) Bearings are assumed to be: , Joint 15 SP 2400F 2.0E or DSS , Joint 10 SP 2400F 2.0E or DSS .
7) Refer to girder(s) for truss to truss connections.
8) Bearing at joint(s) 10 considers parallel to grain value using ANSI/TPI 1 angle to grain formula. Building designer should verify capacity of bearing surface.
9) Provide mechanical connection (by others) of truss to bearing plate capable of withstanding 200 lb uplift at joint 1, 140 lb uplift at joint 15 and 344 lb uplift at joint 10.
10) Graphical purlin representation does not depict the size or the orientation of the purlin along the top and/or bottom chord.

LOAD CASE(S) Standard

March 12,2025

WARNING - Verify design parameters and READ NOTES ON THIS AND INCLUDED MITEK REFERENCE PAGE MII-7473 rev. 1/2/2023 BEFORE USE.
Design valid for use only with MiTek® connectors. This design is based only upon parameters shown, and is for an individual building component, not a truss system. Before use, the building designer must verify the applicability of design parameters and properly incorporate this design into the overall building design. Bracing indicated is to prevent buckling of individual truss web and/or chord members only. Additional temporary and permanent bracing is always required for stability and to prevent collapse with possible personal injury and property damage. For general guidance regarding the fabrication, storage, delivery, erection and bracing of trusses and truss systems, see **ANSI/TPI1 Quality Criteria and DSB-22** available from Truss Plate Institute (www.tpinst.org) and **BCSI Building Component Safety Information** available from the Structural Building Component Association (www.sbcacomponents.com)

ENGINEERING BY TRENCO A MiTek Affiliate
818 Soundside Road
Edenton, NC 27932

Job	Truss	Truss Type	Qty	Ply	JSJ Builders
4938997	A10	Piggyback Base	2	1	I71926202 Job Reference (optional)

Builders FirstSource (Sumter, SC), Sumter, SC - 29153,

Run: 8.83 S Feb 18 2025 Print: 8.830 S Feb 18 2025 MiTek Industries, Inc. Mon Mar 10 12:56:47 Page: 1
ID:oz9po9GeSn?zAXexeP8b28zWhtC-RfC?PsB70Hq3NSgPqnL8w3uITXbGKWrCDoi7J4zJC?f

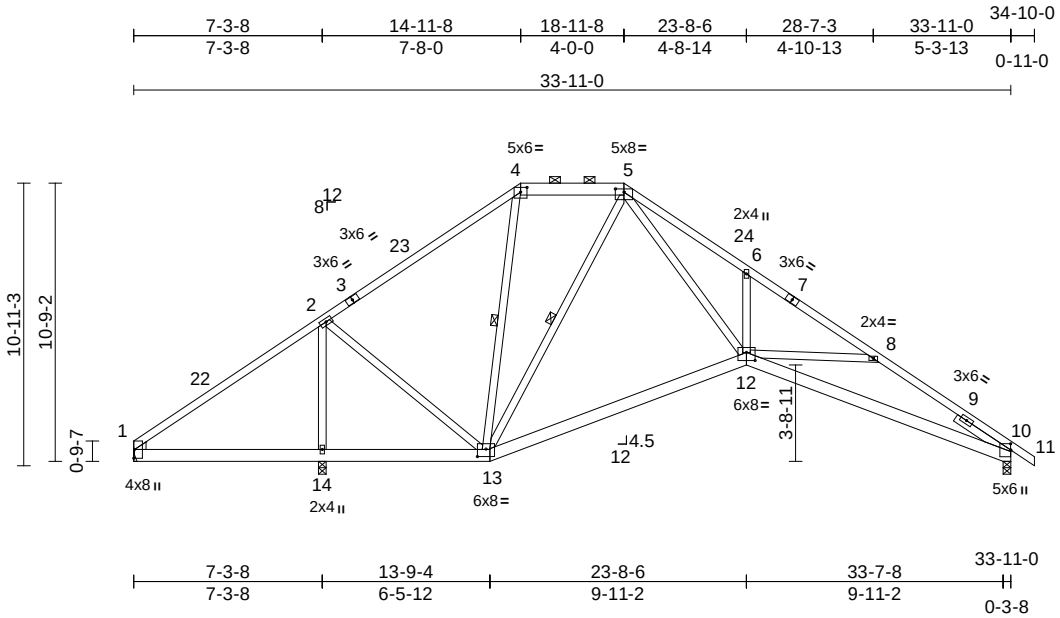

Scale = 1:89.1

Plate Offsets (X, Y): [1:Edge,0-0-6], [4:0-3-0,0-2-3], [5:0-4-0,0-1-9], [10:0-2-15,0-0-1], [12:0-4-0,0-3-12], [13:0-4-0,0-3-8]

Loading	(psf)	Spacing	2-0-0	CSI		DEFL	in	(loc)	l/defl	L/d	PLATES	GRIP
TCLL (roof)	20.0	Plate Grip DOL	1.15	TC	0.41	Vert(LL)	-0.11	12-13	>999	360	MT20	244/190
TCDL	10.0	Lumber DOL	1.15	BC	0.22	Vert(CT)	-0.26	12-13	>999	240		
BCLL	0.0*	Rep Stress Incr	YES	WB	0.91	Horz(CT)	0.14	10	n/a	n/a		
BCDL	10.0	Code	IRC2015/TPI2014	Matrix-MS		Wind(LL)	0.10	12	>999	240	Weight: 227 lb	FT = 20%

LUMBER

TOP CHORD 2x4 SP 2400F 2.0E or 2x4 SP DSS or 2x4 SP SS *Except* 4-5:2x6 SP No.2
BOT CHORD 2x6 SP 2400F 2.0E or 2x6 SP DSS
WEBS 2x4 SP No.3
WEDGE Left: 2x4 SP No.3
SLIDER Right 2x4 SP No.2 -- 2-6-0

BRACING

TOP CHORD Structural wood sheathing directly applied or 4-1-9 oc purlins, except 2-0-0 oc purlins (6-0-0 max.): 4-5.
BOT CHORD Rigid ceiling directly applied or 6-0-0 oc bracing.
WEBS 1 Row at midpt 5-13, 4-13

REACTIONS (size) 1= Mechanical, 10=0-3-8, 14=0-3-8
Max Horiz 1=-346 (LC 8)
Max Uplift 1=-371 (LC 24), 10=-285 (LC 13), 14=-384 (LC 12)
Max Grav 1=55 (LC 8), 10=984 (LC 1), 14=1991 (LC 1)

FORCES (lb) - Maximum Compression/Maximum Tension
TOP CHORD 1-2=-260/829, 2-4=-513/292, 4-5=-485/339, 5-6=-2000/612, 6-8=-1951/421, 8-10=-2307/609, 10-11=0/31
BOT CHORD 1-14=-708/372, 13-14=-708/372, 12-13=-101/650, 10-12=-425/1998
WEBS 2-13=-101/1072, 2-14=-1729/495, 6-12=-436/349, 8-12=-448/402, 5-13=-694/108, 5-12=-340/1729, 4-13=-172/138

NOTES

1) Unbalanced roof live loads have been considered for this design.
2) Wind: ASCE 7-10; Vult=130mph (3-second gust) Vasd=103mph; TCDL=6.0psf; BCDL=6.0psf; h=25ft; Cat. II; Exp C; Enclosed; MWFRS (envelope) exterior zone and C-C Exterior (2) 0-0-0 to 3-0-0, Interior (1) 3-0-0 to 14-11-8, Exterior (2) 14-11-8 to 23-2-7, Interior (1) 23-2-7 to 34-10-0 zone; cantilever left and right exposed ; end vertical right exposed;C-C for members and forces & MWFRS for reactions shown; Lumber DOL=1.60 plate grip DOL=1.60
3) Provide adequate drainage to prevent water ponding.
4) This truss has been designed for a 10.0 psf bottom chord live load nonconcurrent with any other live loads.
5) * This truss has been designed for a live load of 20.0psf on the bottom chord in all areas where a rectangle 3-06-00 tall by 2-00-00 wide will fit between the bottom chord and any other members.
6) Bearings are assumed to be: , Joint 14 SP 2400F 2.0E or DSS , Joint 10 SP 2400F 2.0E or DSS .
7) Refer to girder(s) for truss to truss connections.
8) Bearing at joint(s) 10 considers parallel to grain value using ANSI/TPI 1 angle to grain formula. Building designer should verify capacity of bearing surface.
9) Provide mechanical connection (by others) of truss to bearing plate capable of withstanding 371 lb uplift at joint 1, 384 lb uplift at joint 14 and 285 lb uplift at joint 10.
10) Graphical purlin representation does not depict the size or the orientation of the purlin along the top and/or bottom chord.

LOAD CASE(S) Standard

March 12,2025

WARNING - Verify design parameters and READ NOTES ON THIS AND INCLUDED MITEK REFERENCE PAGE MII-7473 rev. 1/2/2023 BEFORE USE.
Design valid for use only with MiTek® connectors. This design is based only upon parameters shown, and is for an individual building component, not a truss system. Before use, the building designer must verify the applicability of design parameters and properly incorporate this design into the overall building design. Bracing indicated is to prevent buckling of individual truss web and/or chord members only. Additional temporary and permanent bracing is always required for stability and to prevent collapse with possible personal injury and property damage. For general guidance regarding the fabrication, storage, delivery, erection and bracing of trusses and truss systems, see **ANSI/TPI1 Quality Criteria and DSB-22** available from Truss Plate Institute (www.tpinst.org) and **BCSI Building Component Safety Information** available from the Structural Building Component Association (www.sbcacomponents.com)

ENGINEERING BY TRENCO A MiTek Affiliate
818 Soundside Road
Edenton, NC 27932

Job	Truss	Truss Type	Qty	Ply	JSJ Builders
4938997	A11	Hip	1	1	I71926203 Job Reference (optional)

Builders FirstSource (Sumter, SC), Sumter, SC - 29153, Run: 8.83 S Feb 18 2025 Print: 8.830 S Feb 18 2025 MiTek Industries, Inc. Mon Mar 10 12:56:47 Page: 1
ID:tnS_Cs5tME_RWJ9QrFHc7zzWN3?-RfC?PsB70Hq3NSgPqnL8w3uITXbGKWrCDoi7J4zJC?f

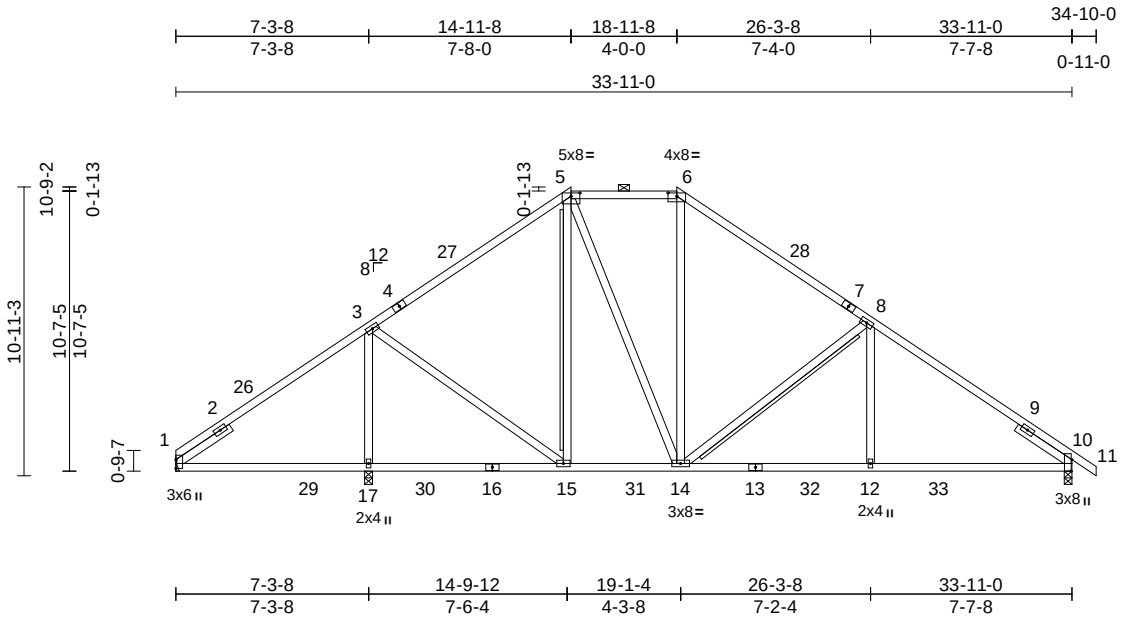

Scale = 1:87.2

Plate Offsets (X, Y): [5:0-4-0,0-1-9], [6:0-4-0,0-1-9], [10:0-5-4,Edge]

Loading	(psf)	Spacing	2-0-0	CSI		DEFL	in	(loc)	l/defl	L/d	PLATES	GRIP
TCLL (roof)	20.0	Plate Grip DOL	1.15	TC	0.77	Vert(LL)	-0.07	12-14	>999	360	MT20	244/190
TCDL	10.0	Lumber DOL	1.15	BC	0.58	Vert(CT)	-0.16	12-14	>999	240		
BCLL	0.0*	Rep Stress Incr	YES	WB	0.54	Horz(CT)	0.04	10	n/a	n/a		
BCDL	10.0	Code	IRC2015/TPI2014	Matrix-MS		Wind(LL)	0.08	17-20	>999	240	Weight: 207 lb	FT = 20%

LUMBER

TOP CHORD	2x4 SP No.2
BOT CHORD	2x4 SP No.2
WEBS	2x4 SP No.3
OTHERS	2x4 SPF No.2(flat)
SLIDER	Left 2x4 SP No.2 -- 2-6-0, Right 2x4 SP No.2 -- 2-6-0

BRACING

TOP CHORD	Structural wood sheathing directly applied or 4-2-3 oc purlins, except 2-0-0 oc purlins (5-8-12 max.): 5-6.
BOT CHORD	Rigid ceiling directly applied or 9-7-10 oc bracing.
WEBS	T-Brace: 2x4 SPF No.2 - 5-15, 8-14 Fasten (2X) T and I braces to narrow edge of web with 10d (0.131"x3") nails, 6in o.c.,with 3in minimum end distance. Brace must cover 90% of web length.

REACTIONS (size) 1= Mechanical, 10=0-3-8, 17=0-3-8
Max Horiz 1=-344 (LC 8)
Max Uplift 1=-236 (LC 12), 10=-346 (LC 13), 17=-110 (LC 12)
Max Grav 1=466 (LC 23), 10=1209 (LC 20), 17=1239 (LC 2)

FORCES (lb) - Maximum Compression/Maximum Tension

TOP CHORD	1-3=-556/368, 3-5=-992/471, 5-6=-960/484, 6-8=-1098/479, 8-10=-1411/472, 10-11=0/31
BOT CHORD	1-17=-404/502, 15-17=-338/502, 14-15=-112/735, 12-14=-249/1185, 10-12=-262/1185
WEBS	3-17=-960/245, 3-15=-87/580, 5-15=-168/111, 5-14=-154/400, 6-14=-120/312, 8-14=-717/389, 8-12=0/314

NOTES

1) Unbalanced roof live loads have been considered for this design.
2) Wind: ASCE 7-10; Vult=130mph (3-second gust) Vasd=103mph; TCDL=6.0psf; BCDL=6.0psf; h=25ft; Cat. II; Exp C; Enclosed; MWFRS (envelope) exterior zone and C-C Exterior (2) 0-0-0 to 3-0-0, Interior (1) 3-0-0 to 14-11-8, Exterior (2) 14-11-8 to 23-2-7, Interior (1) 23-2-7 to 34-10-0 zone; cantilever left and right exposed ; end vertical right exposed;C-C for members and forces & MWFRS for reactions shown; Lumber DOL=1.60 plate grip DOL=1.60
3) Provide adequate drainage to prevent water ponding.
4) All plates are 3x6 (=) MT20 unless otherwise indicated.
5) This truss has been designed for a 10.0 psf bottom chord live load nonconcurrent with any other live loads.
6) * This truss has been designed for a live load of 20.0psf on the bottom chord in all areas where a rectangle 3-06-00 tall by 2-00-00 wide will fit between the bottom chord and any other members, with BCDL = 10.0psf.
7) Bearings are assumed to be: , Joint 17 SP No.2 , Joint 10 SP No.2 .
8) Refer to girder(s) for truss to truss connections.
9) Provide mechanical connection (by others) of truss to bearing plate capable of withstanding 236 lb uplift at joint 1, 110 lb uplift at joint 17 and 346 lb uplift at joint 10.
10) Graphical purlin representation does not depict the size or the orientation of the purlin along the top and/or bottom chord.
11) Warning: Additional permanent and stability bracing for truss system (not part of this component design) is always required.

LOAD CASE(S) Standard

March 12,2025

WARNING - Verify design parameters and READ NOTES ON THIS AND INCLUDED MITEK REFERENCE PAGE MII-7473 rev. 1/2/2023 BEFORE USE.
Design valid for use only with MiTek® connectors. This design is based only upon parameters shown, and is for an individual building component, not a truss system. Before use, the building designer must verify the applicability of design parameters and properly incorporate this design into the overall building design. Bracing indicated is to prevent buckling of individual truss web and/or chord members only. Additional temporary and permanent bracing is always required for stability and to prevent collapse with possible personal injury and property damage. For general guidance regarding the fabrication, storage, delivery, erection and bracing of trusses and truss systems, see **ANSI/TPI1 Quality Criteria and DSB-22** available from Truss Plate Institute (www.tpinst.org) and **BCSI Building Component Safety Information** available from the Structural Building Component Association (www.sbcacomponents.com)

ENGINEERING BY TRENCO A MiTek Affiliate
818 Soundside Road
Edenton, NC 27932

Job	Truss	Truss Type	Qty	Ply	JSJ Builders
4938997	A12	Hip	1	1	I71926204 Job Reference (optional)

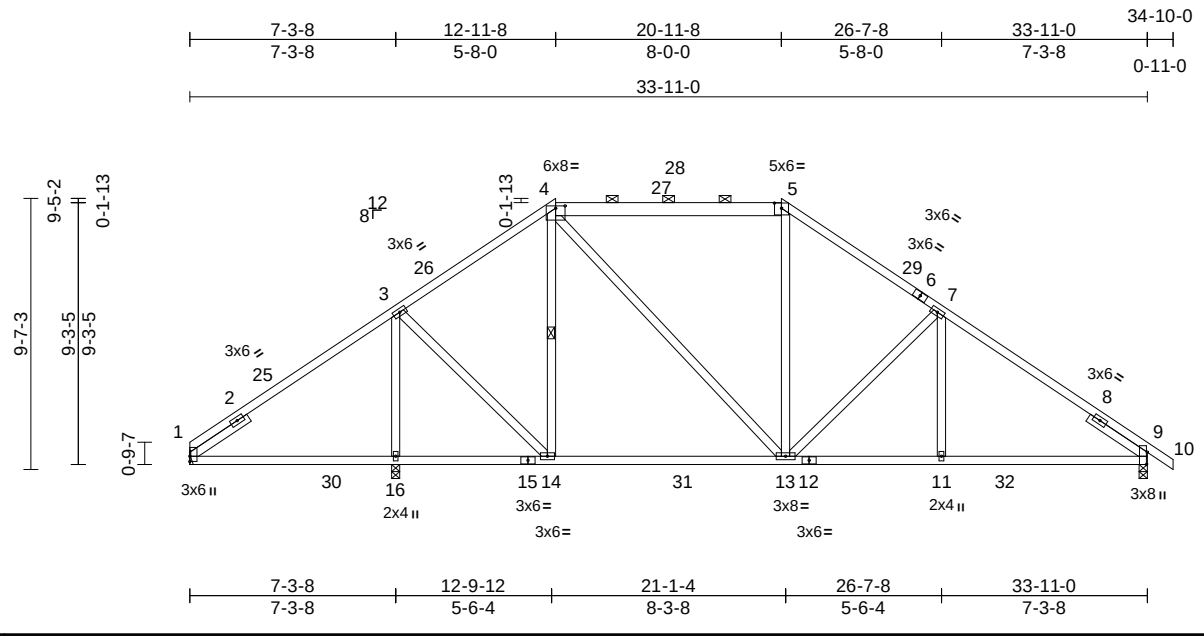

Scale = 1:81.6

Plate Offsets (X, Y): [4:0-4-0,0-1-0], [5:0-3-0,0-2-3], [9:0-5-4,Edge]

Loading	(psf)	Spacing	2-0-0	CSI		DEFL	in	(loc)	l/defl	L/d	PLATES	GRIP
TCLL (roof)	20.0	Plate Grip DOL	1.15	TC	0.54	Vert(LL)	-0.17	13-14	>999	360	MT20	244/190
TCDL	10.0	Lumber DOL	1.15	BC	0.68	Vert(CT)	-0.30	13-14	>999	240		
BCLL	0.0*	Rep Stress Incr	YES	WB	0.60	Horz(CT)	0.04	9	n/a	n/a		
BCDL	10.0	Code	IRC2015/TPI2014	Matrix-MS		Wind(LL)	0.09	16-19	>946	240	Weight: 205 lb	FT = 20%

LUMBER

TOP CHORD 2x4 SP No.2 *Except* 4-5:2x6 SP No.2
BOT CHORD 2x4 SP No.2
WEBS 2x4 SP No.3
SLIDER Left 2x4 SP No.2 -- 2-6-0, Right 2x4 SP No.2 -- 2-6-0

BRACING

TOP CHORD Structural wood sheathing directly applied or 4-5-8 oc purlins, except 2-0-0 oc purlins (6-0-0 max.): 4-5.
BOT CHORD Rigid ceiling directly applied or 8-11-5 oc bracing.
WEBS 1 Row at midpt 4-14

REACTIONS (size) 1= Mechanical, 9=0-3-8, 16=0-3-8
Max Horiz 1=-299 (LC 10)
Max Uplift 1=-301 (LC 12), 9=-341 (LC 13), 16=-16 (LC 9)
Max Grav 1=563 (LC 19), 9=1190 (LC 1), 16=1070 (LC 2)

FORCES (lb) - Maximum Compression/Maximum Tension
TOP CHORD 1-3=-714/437, 3-4=-1021/511, 4-5=-1038/505, 5-7=-1205/523, 7-9=-1429/503, 9-10=0/31
BOT CHORD 1-16=-444/612, 14-16=-384/612, 13-14=-188/763, 11-13=-274/1189, 9-11=-274/1189
WEBS 3-16=-881/171, 3-14=-174/593, 4-14=-223/201, 4-13=-160/395, 5-13=-77/344, 7-13=-537/334, 7-11=0/220

NOTES

1) Unbalanced roof live loads have been considered for this design.
2) Wind: ASCE 7-10; Vult=130mph (3-second gust) Vasd=103mph; TCDL=6.0psf; BCDL=6.0psf; h=25ft; Cat. II; Exp C; Enclosed; MWFRS (envelope) exterior zone and C-C Exterior (2) 0-0-0 to 3-0-0, Interior (1) 3-0-0 to 12-11-8, Exterior (2) 12-11-8 to 17-2-7, Interior (1) 17-2-7 to 20-11-8, Exterior (2) 20-11-8 to 25-2-7, Interior (1) 25-2-7 to 34-10-0 zone; cantilever left and right exposed ; end vertical right exposed;C-C for members and forces & MWFRS for reactions shown; Lumber DOL=1.60 plate grip DOL=1.60
3) Provide adequate drainage to prevent water ponding.
4) This truss has been designed for a 10.0 psf bottom chord live load nonconcurrent with any other live loads.
5) * This truss has been designed for a live load of 20.0psf on the bottom chord in all areas where a rectangle 3-06-00 tall by 2-00-00 wide will fit between the bottom chord and any other members, with BCDL = 10.0psf.
6) Bearings are assumed to be: , Joint 16 SP No.2 , Joint 9 SP No.2 .
7) Refer to girder(s) for truss to truss connections.
8) Provide mechanical connection (by others) of truss to bearing plate capable of withstanding 301 lb uplift at joint 1, 16 lb uplift at joint 16 and 341 lb uplift at joint 9.
9) Graphical purlin representation does not depict the size or the orientation of the purlin along the top and/or bottom chord.

LOAD CASE(S) Standard

March 12,2025

WARNING - Verify design parameters and READ NOTES ON THIS AND INCLUDED MITEK REFERENCE PAGE MII-7473 rev. 1/2/2023 BEFORE USE.
Design valid for use only with MiTek® connectors. This design is based only upon parameters shown, and is for an individual building component, not a truss system. Before use, the building designer must verify the applicability of design parameters and properly incorporate this design into the overall building design. Bracing indicated is to prevent buckling of individual truss web and/or chord members only. Additional temporary and permanent bracing is always required for stability and to prevent collapse with possible personal injury and property damage. For general guidance regarding the fabrication, storage, delivery, erection and bracing of trusses and truss systems, see **ANSI/TPI1 Quality Criteria and DSB-22** available from Truss Plate Institute (www.tpinst.org) and **BCSI Building Component Safety Information** available from the Structural Building Component Association (www.sbcacomponents.com)

ENGINEERING BY TRENCO A MiTek Affiliate
818 Soundside Road
Edenton, NC 27932

Job	Truss	Truss Type	Qty	Ply	JSJ Builders
4938997	A13	Hip	1	1	I71926205 Job Reference (optional)

Builders FirstSource (Sumter, SC), Sumter, SC - 29153, Run: 8.83 S Feb 18 2025 Print: 8.830 S Feb 18 2025 MiTek Industries, Inc. Mon Mar 10 12:56:48 Page: 1
ID:Nyp3g8No5_gl4CXYrkfikczWN03-RfC?PsB70Hq3NSgPqnL8w3uITXbGKWrCDoi7J4zJC?f

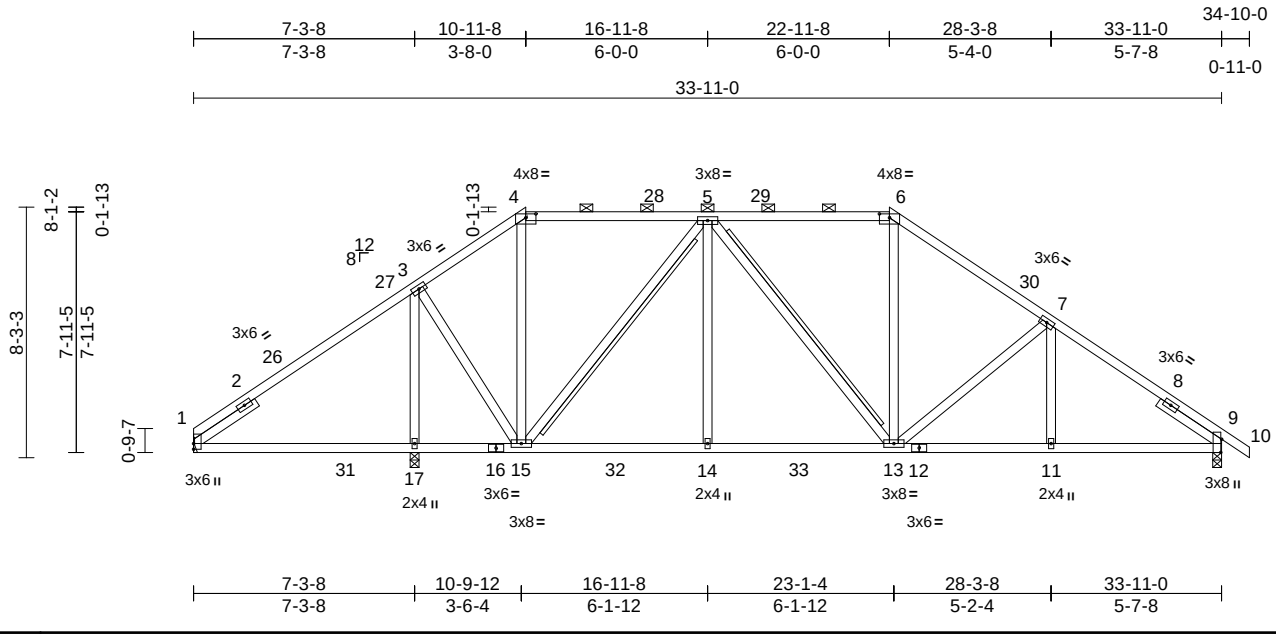

Scale = 1:76

Plate Offsets (X, Y): [4:0-4-0,0-1-9], [6:0-4-0,0-1-9], [9:0-5-4,Edge]

Loading	(psf)	Spacing	2-0-0	CSI		DEFL	in	(loc)	l/defl	L/d	PLATES	GRIP
TCLL (roof)	20.0	Plate Grip DOL	1.15	TC	0.52	Vert(LL)	-0.06	17-20	>999	360	MT20	244/190
TCDL	10.0	Lumber DOL	1.15	BC	0.59	Vert(CT)	-0.14	17-20	>618	240		
BCLL	0.0*	Rep Stress Incr	YES	WB	0.53	Horz(CT)	0.05	9	n/a	n/a		
BCDL	10.0	Code	IRC2015/TPI2014	Matrix-MS		Wind(LL)	0.10	17-20	>895	240	Weight: 210 lb	FT = 20%

LUMBER

TOP CHORD	2x4 SP No.2
BOT CHORD	2x4 SP No.2
WEBS	2x4 SP No.3
OTHERS	2x4 SPF No.2(flat)
SLIDER	Left 2x4 SP No.2 -- 2-6-0, Right 2x4 SP No.2 -- 2-6-0

BRACING

TOP CHORD	Structural wood sheathing directly applied or 4-5-2 oc purlins, except 2-0-0 oc purlins (5-5-3 max.): 4-6.
BOT CHORD	Rigid ceiling directly applied or 9-1-3 oc bracing.
WEBS	T-Brace: 2x4 SPF No.2 - 5-15, 5-13 Fasten (2X) T and I braces to narrow edge of web with 10d (0.131"x3") nails, 6in o.c.,with 3in minimum end distance. Brace must cover 90% of web length.

REACTIONS (size) 1= Mechanical, 9=0-3-8, 17=0-3-8
Max Horiz 1=-255 (LC 8)
Max Uplift 1=-313 (LC 12), 9=-313 (LC 13), 17=-148 (LC 8)
Max Grav 1=541 (LC 19), 9=1172 (LC 1), 17=1163 (LC 2)

FORCES (lb) - Maximum Compression/Maximum Tension

TOP CHORD	1-3=-619/443, 3-4=-908/499, 4-5=-755/439, 5-6=-1038/493, 6-7=-1267/515, 7-9=-1515/499, 9-10=0/31
BOT CHORD	1-17=-438/549, 15-17=-365/549, 14-15=-263/1013, 13-14=-263/1013, 11-13=-298/1206, 9-11=-298/1206
WEBS	3-17=-950/229, 3-15=-301/661, 4-15=-165/336, 5-15=-772/283, 5-14=0/338, 5-13=-197/225, 6-13=-99/397, 7-13=-419/271, 7-11=0/178

NOTES

1) Unbalanced roof live loads have been considered for this design.
2) Wind: ASCE 7-10; Vult=130mph (3-second gust) Vasd=103mph; TCDL=6.0psf; BCDL=6.0psf; h=25ft; Cat. II; Exp C; Enclosed; MWFRS (envelope) exterior zone and C-C Exterior (2) 0-0-0 to 3-0-0, Interior (1) 3-0-0 to 10-11-8, Exterior (2) 10-11-8 to 15-2-7, Interior (1) 15-2-7 to 22-11-8, Exterior (2) 22-11-8 to 27-2-7, Interior (1) 27-2-7 to 34-10-0 zone; cantilever left and right exposed ; end vertical right exposed;C-C for members and forces & MWFRS for reactions shown; Lumber DOL=1.60 plate grip DOL=1.60
3) Provide adequate drainage to prevent water ponding.
4) This truss has been designed for a 10.0 psf bottom chord live load nonconcurrent with any other live loads.
5) * This truss has been designed for a live load of 20.0psf on the bottom chord in all areas where a rectangle 3-06-00 tall by 2-00-00 wide will fit between the bottom chord and any other members, with BCDL = 10.0psf.
6) Bearings are assumed to be: , Joint 17 SP No.2 , Joint 9 SP No.2 .
7) Refer to girder(s) for truss to truss connections.
8) Provide mechanical connection (by others) of truss to bearing plate capable of withstanding 313 lb uplift at joint 1, 148 lb uplift at joint 17 and 313 lb uplift at joint 9.
9) Graphical purlin representation does not depict the size or the orientation of the purlin along the top and/or bottom chord.
10) Warning: Additional permanent and stability bracing for truss system (not part of this component design) is always required.

LOAD CASE(S) Standard

March 12,2025

WARNING - Verify design parameters and READ NOTES ON THIS AND INCLUDED MITEK REFERENCE PAGE MII-7473 rev. 1/2/2023 BEFORE USE.
Design valid for use only with MiTek® connectors. This design is based only upon parameters shown, and is for an individual building component, not a truss system. Before use, the building designer must verify the applicability of design parameters and properly incorporate this design into the overall building design. Bracing indicated is to prevent buckling of individual truss web and/or chord members only. Additional temporary and permanent bracing is always required for stability and to prevent collapse with possible personal injury and property damage. For general guidance regarding the fabrication, storage, delivery, erection and bracing of trusses and truss systems, see **ANSI/TPI1 Quality Criteria and DSB-22** available from Truss Plate Institute (www.tpinst.org) and **BCSI Building Component Safety Information** available from the Structural Building Component Association (www.sbcacomponents.com)

ENGINEERING BY TRENCO A MiTek Affiliate
818 Soundside Road
Edenton, NC 27932

Job	Truss	Truss Type	Qty	Ply	JSJ Builders
4938997	A14	Hip	1	1	I71926206 Job Reference (optional)

Builders FirstSource (Sumter, SC), Sumter, SC - 29153,

Run: 8.83 S Feb 18 2025 Print: 8.830 S Feb 18 2025 MiTek Industries, Inc. Mon Mar 10 12:56:48 Page: 1
ID:1LeISULzFalPgVewXX5T_UzWN_p-RfC?PsB70Hq3NSgPqnL8w3uITXbGKWrCDoi7J4zJC?f

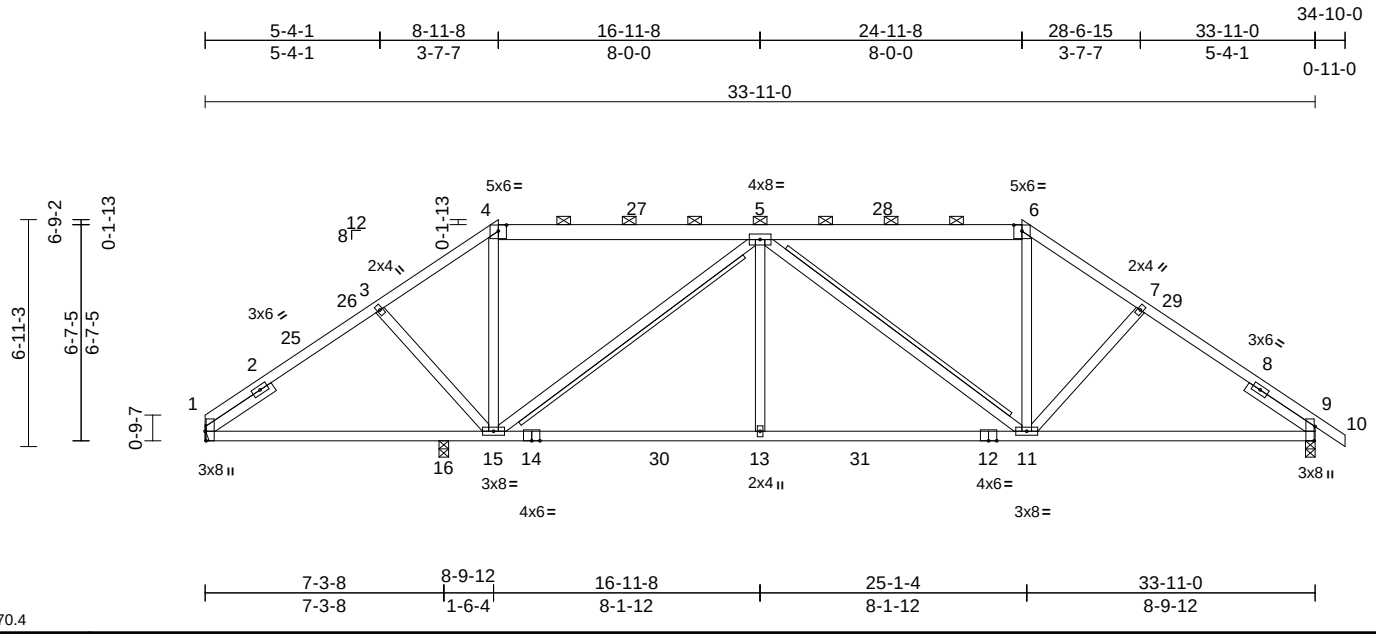

Scale = 1:70.4

Plate Offsets (X, Y): [1:0-3-8,Edge], [4:0-3-0,0-2-3], [6:0-3-0,0-2-3], [9:0-5-4,Edge], [9:0-0-0,0-0-0]

Loading	(psf)	Spacing	2-0-0	CSI		DEFL	in	(loc)	l/defl	L/d	PLATES	GRIP
TCLL (roof)	20.0	Plate Grip DOL	1.15	TC	0.47	Vert(LL)	-0.16	13-15	>999	360	MT20	244/190
TCDL	10.0	Lumber DOL	1.15	BC	0.91	Vert(CT)	-0.36	13-15	>899	240		
BCLL	0.0*	Rep Stress Incr	YES	WB	0.55	Horz(CT)	0.09	9	n/a	n/a		
BCDL	10.0	Code	IRC2015/TPI2014	Matrix-MS		Wind(LL)	0.14	13-15	>999	240	Weight: 200 lb	FT = 20%

LUMBER

TOP CHORD 2x4 SP No.2 *Except* 4-6:2x6 SP No.2
BOT CHORD 2x4 SP No.2
WEBS 2x4 SP No.3
OTHERS 2x4 SPF No.2(flat)
SLIDER Left 2x4 SP No.2 -- 2-6-0, Right 2x4 SP No.2 -- 2-6-0

BRACING

TOP CHORD Structural wood sheathing directly applied or 3-9-11 oc purlins, except
2-0-0 oc purlins (5-10-10 max.): 4-6.
BOT CHORD Rigid ceiling directly applied or 8-5-2 oc bracing.
WEBS T-Brace: 2x4 SPF No.2 - 5-15, 5-11
Fasten (2X) T and I braces to narrow edge of web with 10d (0.131"x3") nails, 6in o.c.,with 3in minimum end distance.
Brace must cover 90% of web length.

REACTIONS (size) 1= Mechanical, 9=0-3-8, 16=0-3-8
Max Horiz 1=-210 (LC 10)
Max Uplift 1=-249 (LC 12), 9=-291 (LC 13), 16=-26 (LC 9)
Max Grav 1=1134 (LC 1), 9=1352 (LC 1), 16=283 (LC 1)

FORCES (lb) - Maximum Compression/Maximum Tension
TOP CHORD 1-3=-1570/543, 3-4=-1428/545, 4-5=-1166/497, 5-6=-1340/516, 6-7=-1640/561, 7-9=-1783/562, 9-10=0/31
BOT CHORD 1-16=-400/1239, 15-16=-400/1239, 13-15=-474/1774, 11-13=-474/1774, 9-11=-344/1419
WEBS 3-15=-225/234, 4-15=-116/464, 5-15=-855/337, 5-13=0/405, 5-11=-663/335, 6-11=-128/576, 7-11=-234/232

NOTES

1) Unbalanced roof live loads have been considered for this design.
2) Wind: ASCE 7-10; Vult=130mph (3-second gust) Vasd=103mph; TCDL=6.0psf; BCDL=6.0psf; h=25ft; Cat. II; Exp C; Enclosed; MWFRS (envelope) exterior zone and C-C Exterior (2) 0-0-0 to 3-0-0, Interior (1) 3-0-0 to 8-11-8, Exterior (2) 8-11-8 to 13-2-7, Interior (1) 13-2-7 to 24-11-8, Exterior (2) 24-11-8 to 29-2-7, Interior (1) 29-2-7 to 34-10-0 zone; cantilever left and right exposed ; end vertical right exposed;C-C for members and forces & MWFRS for reactions shown; Lumber DOL=1.60 plate grip DOL=1.60
3) Provide adequate drainage to prevent water ponding.
4) This truss has been designed for a 10.0 psf bottom chord live load nonconcurrent with any other live loads.
5) * This truss has been designed for a live load of 20.0psf on the bottom chord in all areas where a rectangle 3-06-00 tall by 2-00-00 wide will fit between the bottom chord and any other members, with BCDL = 10.0psf.
6) Bearings are assumed to be: , Joint 16 SP No.2 , Joint 9 SP No.2 .
7) Refer to girder(s) for truss to truss connections.
8) Provide mechanical connection (by others) of truss to bearing plate capable of withstanding 249 lb uplift at joint 1, 291 lb uplift at joint 9 and 26 lb uplift at joint 16.
9) Graphical purlin representation does not depict the size or the orientation of the purlin along the top and/or bottom chord.
10) Warning: Additional permanent and stability bracing for truss system (not part of this component design) is always required.

LOAD CASE(S) Standard

March 12,2025

WARNING - Verify design parameters and READ NOTES ON THIS AND INCLUDED MITEK REFERENCE PAGE MII-7473 rev. 1/2/2023 BEFORE USE.
Design valid for use only with MiTek® connectors. This design is based only upon parameters shown, and is for an individual building component, not a truss system. Before use, the building designer must verify the applicability of design parameters and properly incorporate this design into the overall building design. Bracing indicated is to prevent buckling of individual truss web and/or chord members only. Additional temporary and permanent bracing is always required for stability and to prevent collapse with possible personal injury and property damage. For general guidance regarding the fabrication, storage, delivery, erection and bracing of trusses and truss systems, see **ANSI/TPI1 Quality Criteria and DSB-22** available from Truss Plate Institute (www.tpinst.org) and **BCSI Building Component Safety Information** available from the Structural Building Component Association (www.sbcacomponents.com)

ENGINEERING BY TRENCO A MiTek Affiliate
818 Soundside Road
Edenton, NC 27932

Job	Truss	Truss Type	Qty	Ply	JSJ Builders
4938997	A15	Hip	1	1	I71926207 Job Reference (optional)

Builders FirstSource (Sumter, SC), Sumter, SC - 29153,

Run: 8.83 S Feb 18 2025 Print: 8.830 S Feb 18 2025 MiTek Industries, Inc. Mon Mar 10 12:56:49 Page: 1
ID:YPiMuT3YyuRr?gcx0V5SwDzWMw0-RfC?PsB70Hq3NSgPqnL8w3uITXbGKWrCDoi7J4zJC?f

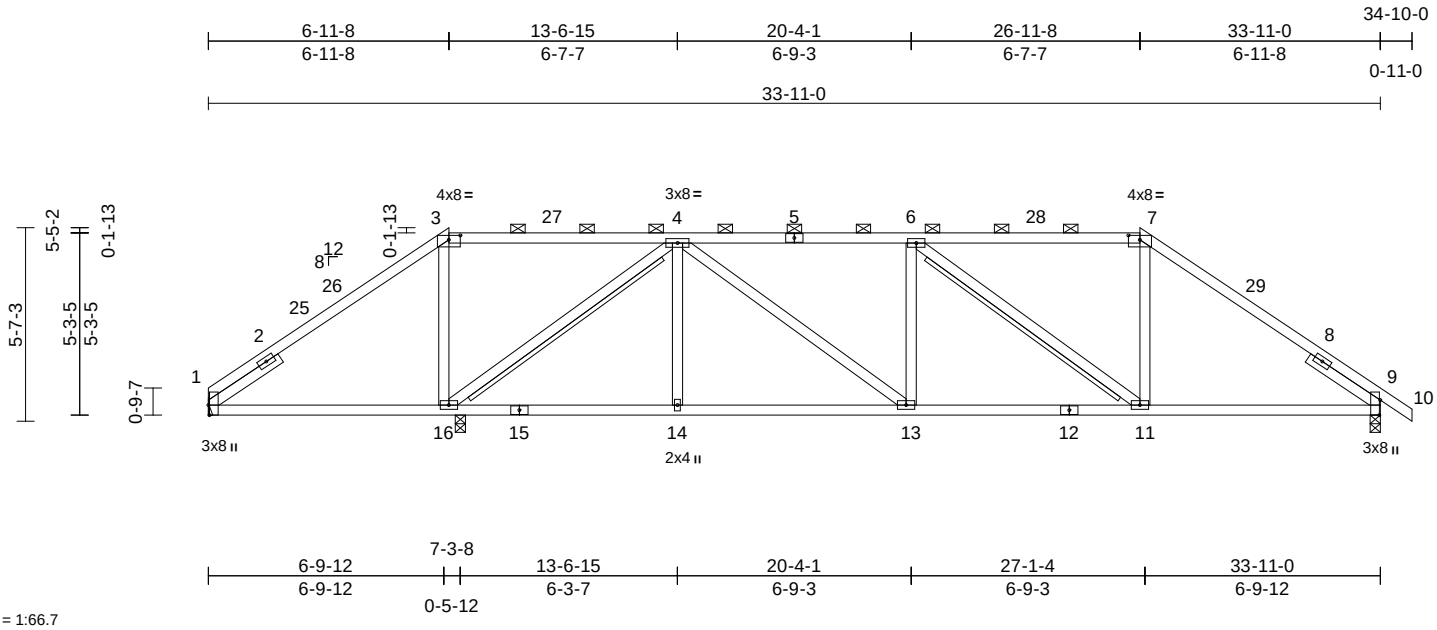

Scale = 1:66.7

Plate Offsets (X, Y): [1:0-3-8,Edge], [3:0-4-0,0-1-9], [7:0-4-0,0-1-9], [9:0-5-4,Edge]

Loading	(psf)	Spacing	2-0-0	CSI		DEFL	in	(loc)	l/defl	L/d	PLATES	GRIP
TCLL (roof)	20.0	Plate Grip DOL	1.15	TC	0.60	Vert(LL)	-0.08	11-13	>999	360	MT20	244/190
TCDL	10.0	Lumber DOL	1.15	BC	0.62	Vert(CT)	-0.17	11-13	>999	240		
BCLL	0.0*	Rep Stress Incr	YES	WB	0.65	Horz(CT)	0.07	9	n/a	n/a		
BCDL	10.0	Code	IRC2015/TPI2014	Matrix-MS		Wind(LL)	0.11	11-13	>999	240	Weight: 179 lb	FT = 20%

LUMBER

TOP CHORD	2x4 SP No.2
BOT CHORD	2x4 SP No.2
WEBS	2x4 SP No.3
OTHERS	2x4 SPF No.2(flat)
SLIDER	Left 2x4 SP No.2 -- 2-6-0, Right 2x4 SP No.2 -- 2-6-0

BRACING

TOP CHORD	Structural wood sheathing directly applied or 4-2-2 oc purlins, except 2-0-0 oc purlins (4-3-6 max.): 3-7.
BOT CHORD	Rigid ceiling directly applied or 6-0-0 oc bracing.
WEBS	T-Brace: 2x4 SPF No.2 - 4-16, 6-11 Fasten (2X) T and I braces to narrow edge of web with 10d (0.131"x3") nails, 6in o.c.,with 3in minimum end distance. Brace must cover 90% of web length.

REACTIONS (size) 1= Mechanical, 9=0-3-8, 16=0-3-8
Max Horiz 1=-166 (LC 10)
Max Uplift 1=-382 (LC 12), 9=-281 (LC 13), 16=-487 (LC 8)
Max Grav 1=479 (LC 19), 9=1144 (LC 1), 16=1431 (LC 24)

FORCES (lb) - Maximum Compression/Maximum Tension

TOP CHORD	1-3=-533/545, 3-4=-524/536, 4-6=-1548/657, 6-7=-1139/493, 7-9=-1458/507, 9-10=0/31
BOT CHORD	1-16=-414/469, 14-16=-407/1177, 13-14=-407/1177, 11-13=-436/1548, 9-11=-272/1150
WEBS	3-16=-397/232, 7-11=-70/459, 4-14=0/256, 4-16=-1452/583, 4-13=-219/536, 6-13=-178/215, 6-11=-584/315

NOTES

1) Unbalanced roof live loads have been considered for this design.
2) Wind: ASCE 7-10; Vult=130mph (3-second gust) Vasd=103mph; TCDL=6.0psf; BCDL=6.0psf; h=25ft; Cat. II; Exp C; Enclosed; MWFRS (envelope) exterior zone and C-C Exterior (2) 0-0-0 to 3-0-0, Interior (1) 3-0-0 to 6-11-8, Exterior (2) 6-11-8 to 9-11-8, Interior (1) 9-11-8 to 26-11-8, Exterior (2) 26-11-8 to 29-11-8, Interior (1) 29-11-8 to 34-10-0 zone; cantilever left and right exposed ; end vertical right exposed;C-C for members and forces & MWFRS for reactions shown; Lumber DOL=1.60 plate grip DOL=1.60
3) Provide adequate drainage to prevent water ponding.
4) All plates are 3x6 (=) MT20 unless otherwise indicated.
5) This truss has been designed for a 10.0 psf bottom chord live load nonconcurrent with any other live loads.
6) * This truss has been designed for a live load of 20.0psf on the bottom chord in all areas where a rectangle 3-06-00 tall by 2-00-00 wide will fit between the bottom chord and any other members.
7) Bearings are assumed to be: , Joint 16 SP No.2 , Joint 9 SP No.2 .
8) Refer to girder(s) for truss to truss connections.
9) Provide mechanical connection (by others) of truss to bearing plate capable of withstanding 382 lb uplift at joint 1, 487 lb uplift at joint 16 and 281 lb uplift at joint 9.
10) Graphical purlin representation does not depict the size or the orientation of the purlin along the top and/or bottom chord.
11) Warning: Additional permanent and stability bracing for truss system (not part of this component design) is always required.

LOAD CASE(S) Standard

March 12,2025

WARNING - Verify design parameters and READ NOTES ON THIS AND INCLUDED MITEK REFERENCE PAGE MII-7473 rev. 1/2/2023 BEFORE USE.
Design valid for use only with MiTek® connectors. This design is based only upon parameters shown, and is for an individual building component, not a truss system. Before use, the building designer must verify the applicability of design parameters and properly incorporate this design into the overall building design. Bracing indicated is to prevent buckling of individual truss web and/or chord members only. Additional temporary and permanent bracing is always required for stability and to prevent collapse with possible personal injury and property damage. For general guidance regarding the fabrication, storage, delivery, erection and bracing of trusses and truss systems, see **ANSI/TPI1 Quality Criteria and DSB-22** available from Truss Plate Institute (www.tpinst.org) and **BCSI Building Component Safety Information** available from the Structural Building Component Association (www.sbcacomponents.com)

ENGINEERING BY TRENCO A MiTek Affiliate
818 Soundside Road
Edenton, NC 27932

Job	Truss	Truss Type	Qty	Ply	JSJ Builders
4938997	A16	Hip Girder	1	2	I71926208 Job Reference (optional)

Builders FirstSource (Sumter, SC), Sumter, SC - 29153,

Run: 8.83 S Feb 18 2025 Print: 8.830 S Feb 18 2025 MiTek Industries, Inc. Mon Mar 10 12:56:50 Page: 1
ID:v_fpL2LflmvfL7IVnTWYmnzWMuL-RfC?PsB70Hq3NSgPqnL8w3uITXbGKWrCDoi7J4zJC?f

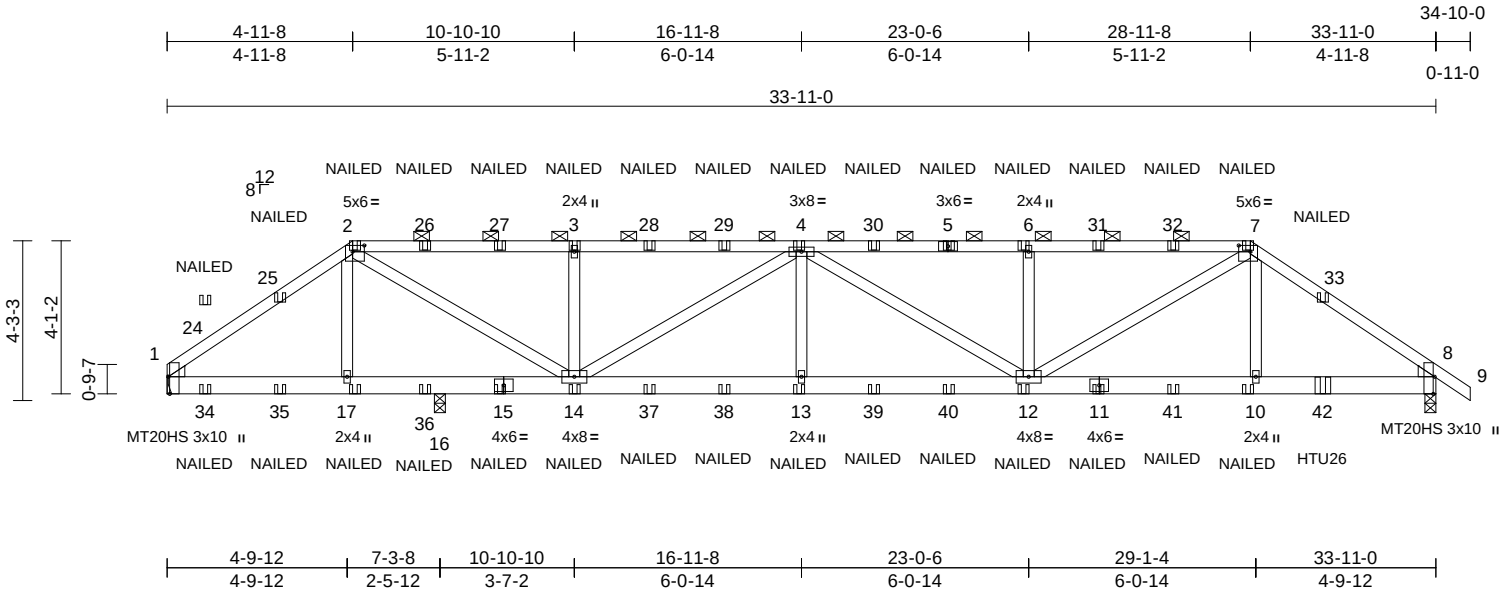

Scale = 1:61.6

Plate Offsets (X, Y): [1:0-5-8,Edge], [2:0-3-12,0-2-0], [7:0-3-12,0-2-0], [8:0-5-8,Edge]

Loading	(psf)	Spacing	2-0-0	CSI		DEFL	in	(loc)	l/defl	L/d	PLATES	GRIP
TCLL (roof)	20.0	Plate Grip DOL	1.15	TC	0.37	Vert(LL)	-0.11	13-14	>999	360	MT20	244/190
TCDL	10.0	Lumber DOL	1.15	BC	0.84	Vert(CT)	-0.22	13-14	>999	240	MT20HS	187/143
BCLL	0.0*	Rep Stress Incr	NO	WB	0.32	Horz(CT)	0.04	8	n/a	n/a		
BCDL	10.0	Code	IRC2015/TPI2014	Matrix-MS		Wind(LL)	0.20	13-14	>999	240	Weight: 401 lb	FT = 20%

LUMBER

TOP CHORD 2x4 SP No.2
BOT CHORD 2x6 SP No.2
WEBS 2x4 SP No.2
WEDGE Left: 2x4 SP No.2
Right: 2x4 SP No.2

BRACING

TOP CHORD Structural wood sheathing directly applied or 6-0-0 oc purlins, except 2-0-0 oc purlins (6-0-0 max.): 2-7.
BOT CHORD Rigid ceiling directly applied or 10-0-0 oc bracing.

REACTIONS (size) 1= Mechanical, 8=0-3-8, 16=0-3-8
Max Horiz 1=-125 (LC 6)
Max Uplift 1=-476 (LC 8), 8=-1011 (LC 4), 16=-932 (LC 5)
Max Grav 1=1059 (LC 1), 8=1931 (LC 1), 16=1662 (LC 18)

FORCES (lb) - Maximum Compression/Maximum Tension
TOP CHORD 1-2=-1084/536, 2-3=-2397/1432, 3-4=-2397/1432, 4-6=-3709/2194, 6-7=-3709/2194, 7-8=-2742/1542, 8-9=0/31
BOT CHORD 1-17=-468/846, 16-17=-489/876, 14-16=-489/876, 13-14=-2271/3963, 12-13=-2271/3963, 10-12=-1209/2233, 8-10=-1211/2245
WEBS 2-17=-800/567, 7-10=-136/356, 4-13=-278/679, 4-12=-207/139, 6-12=-398/342, 7-12=-1114/1844, 3-14=-392/339, 2-14=-1183/1940, 4-14=-1760/1025

NOTES

1) 2-ply truss to be connected together with 10d (0.131"x3") nails as follows:
Top chords connected as follows: 2x4 - 1 row at 0-9-0 oc.
Bottom chords connected as follows: 2x6 - 2 rows staggered at 0-9-0 oc.
Web connected as follows: 2x4 - 1 row at 0-9-0 oc.
2) All loads are considered equally applied to all plies, except if noted as front (F) or back (B) face in the LOAD CASE(S) section. Ply to ply connections have been provided to distribute only loads noted as (F) or (B), unless otherwise indicated.
3) Unbalanced roof live loads have been considered for this design.
4) Wind: ASCE 7-10; Vult=130mph (3-second gust) Vasd=103mph; TCDL=6.0psf; BCDL=6.0psf; h=25ft; Cat. II; Exp C; Enclosed; MWFRS (envelope) exterior zone; cantilever left and right exposed ; end vertical right exposed; Lumber DOL=1.60 plate grip DOL=1.60
5) Provide adequate drainage to prevent water ponding.
6) All plates are MT20 plates unless otherwise indicated.
7) This truss has been designed for a 10.0 psf bottom chord live load nonconcurrent with any other live loads.
8) * This truss has been designed for a live load of 20.0psf on the bottom chord in all areas where a rectangle 3-06-00 tall by 2-00-00 wide will fit between the bottom chord and any other members.
9) Bearings are assumed to be: , Joint 16 SP No.2 , Joint 8 SP No.2 .
10) Refer to girder(s) for truss to truss connections.
11) Provide mechanical connection (by others) of truss to bearing plate capable of withstanding 476 lb uplift at joint 1, 1011 lb uplift at joint 8 and 932 lb uplift at joint 16.
12) Graphical purlin representation does not depict the size or the orientation of the purlin along the top and/or bottom chord.
13) Use Simpson Strong-Tie HTU26 (10-16d Girder, 14-10dx1 1/2 Truss) or equivalent at 30-10-12 from the left end to connect truss(es) to back face of bottom chord.
14) Fill all nail holes where hanger is in contact with lumber.
15) "NAILED" indicates 3-10d (0.148"x3") or 3-12d (0.148"x3.25") toe-nails per NDS guidlines.

LOAD CASE(S) Standard

1) Dead + Roof Live (balanced): Lumber Increase=1.15, Plate Increase=1.15
Uniform Loads (lb/ft)
Vert: 1-2=-60, 2-7=-60, 7-9=-60, 18-21=-20
Concentrated Loads (lb)
Vert: 5=-3 (B), 15=-110 (B), 17=-110 (B), 10=-110 (B), 11=-110 (B), 4=-3 (B), 13=-110 (B), 6=-3 (B), 7=-3 (B), 12=-110 (B), 14=-110 (B), 3=-3 (B), 2=-3 (B), 24=-58 (B), 26=-3 (B), 27=-3 (B), 28=-3 (B), 29=-3 (B), 30=-3 (B), 31=-3 (B), 32=-3 (B), 34=-53 (B), 35=-112 (B), 36=-110 (B), 37=-110 (B), 38=-110 (B), 39=-110 (B), 40=-110 (B), 41=-110 (B), 42=-131 (B)

March 12,2025

WARNING - Verify design parameters and READ NOTES ON THIS AND INCLUDED MITEK REFERENCE PAGE MII-7473 rev. 1/2/2023 BEFORE USE.
Design valid for use only with MiTek® connectors. This design is based only upon parameters shown, and is for an individual building component, not a truss system. Before use, the building designer must verify the applicability of design parameters and properly incorporate this design into the overall building design. Bracing indicated is to prevent buckling of individual truss web and/or chord members only. Additional temporary and permanent bracing is always required for stability and to prevent collapse with possible personal injury and property damage. For general guidance regarding the fabrication, storage, delivery, erection and bracing of trusses and truss systems, see **ANSI/TPI1 Quality Criteria and DSB-22** available from Truss Plate Institute (www.tpinst.org) and **BCSI Building Component Safety Information** available from the Structural Building Component Association (www.sbcacomponents.com)

ENGINEERING BY TRENCO A MiTek Affiliate
818 Soundside Road
Edenton, NC 27932

Job	Truss	Truss Type	Qty	Ply	JSJ Builders
4938997	B01	Common Supported Gable	1	1	I71926209 Job Reference (optional)

Builders FirstSource (Sumter, SC), Sumter, SC - 29153, Run: 8.83 S Feb 18 2025 Print: 8.830 S Feb 18 2025 MiTek Industries, Inc. Mon Mar 10 12:56:50 Page: 1
ID:cip6yFaalaoQmrty?MwlorzWiE2-RfC?PsB70Hq3NSgPqnL8w3uITXbGKWrCDoi7J4zJC?f

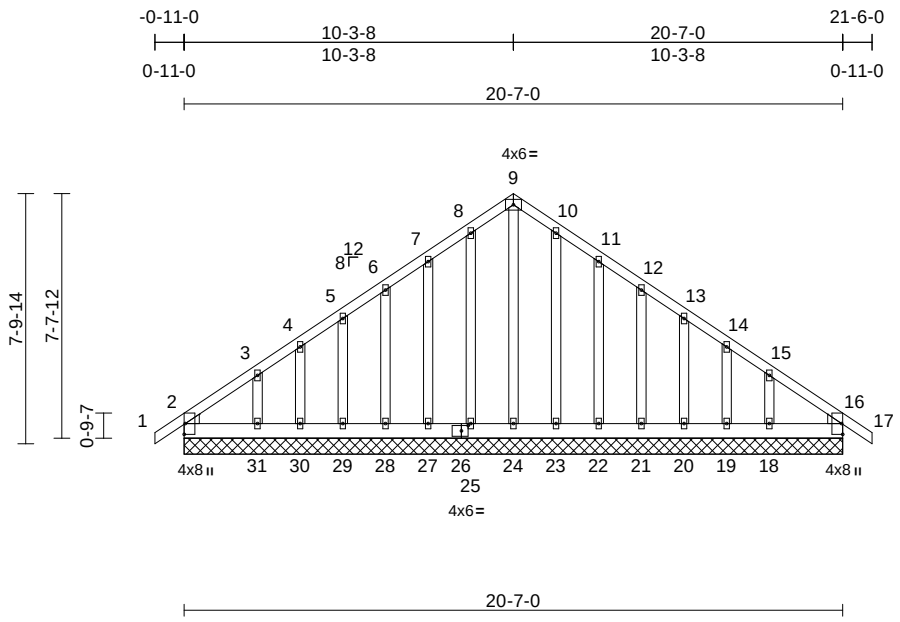

Scale = 1:72

Plate Offsets (X, Y): [2:Edge,0-0-6], [16:Edge,0-0-6], [26:0-2-8,0-2-0]

Loading	(psf)	Spacing	2-0-0	CSI		DEFL	in	(loc)	l/defl	L/d	PLATES	GRIP
TCLL (roof)	20.0	Plate Grip DOL	1.15	TC	0.06	Vert(LL)	n/a	-	n/a	999	MT20	244/190
TCDL	10.0	Lumber DOL	1.15	BC	0.07	Vert(CT)	n/a	-	n/a	999		
BCLL	0.0*	Rep Stress Incr	YES	WB	0.16	Horz(CT)	0.00	16	n/a	n/a		
BCDL	10.0	Code	IRC2015/TPI2014	Matrix-MS							Weight: 168 lb	FT = 20%

LUMBER

TOP CHORD 2x4 SP No.2
BOT CHORD 2x6 SP No.2
OTHERS 2x4 SP No.3
WEDGE Left: 2x4 SP No.3
Right: 2x4 SP No.3

BRACING

TOP CHORD Structural wood sheathing directly applied or 6-0-0 oc purlins.
BOT CHORD Rigid ceiling directly applied or 10-0-0 oc bracing.

REACTIONS (size) 2=20-7-0, 16=20-7-0, 18=20-7-0, 19=20-7-0, 20=20-7-0, 21=20-7-0, 22=20-7-0, 23=20-7-0, 24=20-7-0, 25=20-7-0, 27=20-7-0, 28=20-7-0, 29=20-7-0, 30=20-7-0, 31=20-7-0
Max Horiz 2=-249 (LC 10)
Max Uplift 2=-61 (LC 8), 16=-20 (LC 9), 18=-166 (LC 13), 19=-30 (LC 13), 20=-78 (LC 13), 21=-65 (LC 13), 22=-78 (LC 13), 23=-48 (LC 13), 25=-53 (LC 12), 27=-76 (LC 12), 28=-65 (LC 12), 29=-79 (LC 12), 30=-25 (LC 12), 31=-177 (LC 12)
Max Grav 2=190 (LC 20), 16=159 (LC 1), 18=208 (LC 20), 19=88 (LC 1), 20=128 (LC 20), 21=118 (LC 20), 22=123 (LC 20), 23=120 (LC 20), 24=168 (LC 13), 25=125 (LC 19), 27=121 (LC 19), 28=118 (LC 19), 29=130 (LC 19), 30=88 (LC 1), 31=220 (LC 19)

FORCES (lb) - Maximum Compression/Maximum Tension

TOP CHORD 1-2=0/31, 2-3=-205/161, 3-4=-143/126, 4-5=-124/111, 5-6=-110/112, 6-7=-111/144, 7-8=-159/179, 8-9=-193/213, 9-10=-193/213, 10-11=-159/173, 11-12=-111/116, 12-13=-68/72, 13-14=-72/55, 14-15=-88/66, 15-16=-163/104, 16-17=0/31
BOT CHORD 2-31=-168/203, 30-31=-123/203, 29-30=-123/203, 28-29=-123/203, 27-28=-123/203, 25-27=-123/203, 24-25=-123/203, 23-24=-123/203, 22-23=-123/203, 21-22=-123/203, 20-21=-123/203, 19-20=-123/203, 18-19=-123/203, 16-18=-123/203
WEBS 9-24=-162/108, 8-25=-98/69, 7-27=-113/92, 6-28=-105/84, 5-29=-107/86, 4-30=-94/73, 3-31=-146/119, 10-23=-93/64, 11-22=-113/93, 12-21=-104/83, 13-20=-108/86, 14-19=-94/74, 15-18=-147/117

NOTES

1) Unbalanced roof live loads have been considered for this design.
2) Wind: ASCE 7-10; Vult=130mph (3-second gust) Vasd=103mph; TCDL=6.0psf; BCDL=6.0psf; h=25ft; Cat. II; Exp C; Enclosed; MWFRS (envelope) exterior zone and C-C Corner (3) -0-11-0 to 2-3-8, Exterior (2) 2-3-8 to 10-3-8, Corner (3) 10-3-8 to 13-3-8, Exterior (2) 13-3-8 to 21-6-0 zone; cantilever left and right exposed ; end vertical left and right exposed;C-C for members and forces & MWFRS for reactions shown; Lumber DOL=1.60 plate grip DOL=1.60
3) Truss designed for wind loads in the plane of the truss only. For studs exposed to wind (normal to the face), see Standard Industry Gable End Details as applicable, or consult qualified building designer as per ANSI/TPI 1.
4) All plates are 2x4 (||) MT20 unless otherwise indicated.
5) Gable requires continuous bottom chord bearing.
6) Gable studs spaced at 1-4-0 oc.
7) This truss has been designed for a 10.0 psf bottom chord live load nonconcurrent with any other live loads.
8) * This truss has been designed for a live load of 20.0psf on the bottom chord in all areas where a rectangle 3-06-00 tall by 2-00-00 wide will fit between the bottom chord and any other members.
9) All bearings are assumed to be SP No.2 .
10) Provide mechanical connection (by others) of truss to bearing plate capable of withstanding 61 lb uplift at joint 2, 20 lb uplift at joint 16, 53 lb uplift at joint 25, 76 lb uplift at joint 27, 65 lb uplift at joint 28, 79 lb uplift at joint 29, 25 lb uplift at joint 30, 177 lb uplift at joint 31, 48 lb uplift at joint 23, 78 lb uplift at joint 22, 65 lb uplift at joint 21, 78 lb uplift at joint 20, 30 lb uplift at joint 19, 166 lb uplift at joint 18, 61 lb uplift at joint 2 and 20 lb uplift at joint 16.

LOAD CASE(S) Standard

March 12,2025

WARNING - Verify design parameters and READ NOTES ON THIS AND INCLUDED MITEK REFERENCE PAGE MII-7473 rev. 1/2/2023 BEFORE USE.
Design valid for use only with MiTek® connectors. This design is based only upon parameters shown, and is for an individual building component, not a truss system. Before use, the building designer must verify the applicability of design parameters and properly incorporate this design into the overall building design. Bracing indicated is to prevent buckling of individual truss web and/or chord members only. Additional temporary and permanent bracing is always required for stability and to prevent collapse with possible personal injury and property damage. For general guidance regarding the fabrication, storage, delivery, erection and bracing of trusses and truss systems, see **ANSI/TPI1 Quality Criteria and DSB-22** available from Truss Plate Institute (www.tpinst.org) and **BCSI Building Component Safety Information** available from the Structural Building Component Association (www.sbcacomponents.com)

ENGINEERING BY TRENCO A MiTek Affiliate
818 Soundside Road
Edenton, NC 27932

Job	Truss	Truss Type	Qty	Ply	JSJ Builders
4938997	B02	Common	2	1	Job Reference (optional) I71926210

Builders FirstSource (Sumter, SC), Sumter, SC - 29153,

Run: 8.83 S Feb 18 2025 Print: 8.830 S Feb 18 2025 MiTek Industries, Inc. Mon Mar 10 12:56:50 Page: 1
ID:T7QUyYbmqibvYOAOlszl0mzWiFJ-RfC?PsB70Hq3NSgPqnL8w3uITXbGKWrCDoi7J4zJC?f

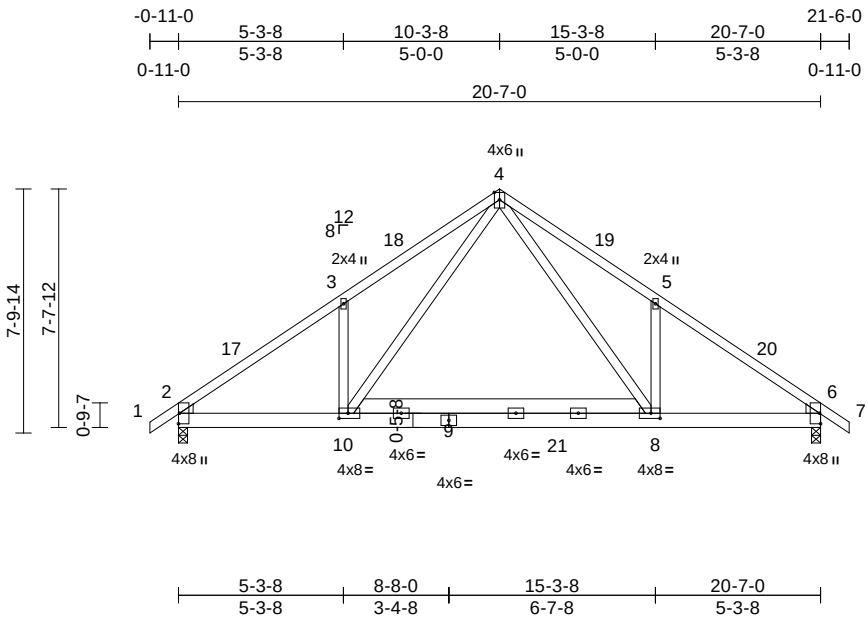

Scale = 1:73.9

Plate Offsets (X, Y): [2:Edge,0-0-6], [6:Edge,0-0-6], [8:0-3-8,0-2-0], [10:0-3-8,0-2-0]

Loading	(psf)	Spacing	2-0-0	CSI		DEFL	in	(loc)	l/defl	L/d	PLATES	GRIP
TCLL (roof)	20.0	Plate Grip DOL	1.15	TC	0.30	Vert(LL)	-0.06	8-10	>999	360	MT20	244/190
TCDL	10.0	Lumber DOL	1.15	BC	0.25	Vert(CT)	-0.11	8-10	>999	240		
BCLL	0.0*	Rep Stress Incr	YES	WB	0.46	Horz(CT)	0.02	6	n/a	n/a		
BCDL	10.0	Code	IRC2015/TPI2014	Matrix-MS		Wind(LL)	0.04	8-10	>999	240	Weight: 148 lb	FT = 20%

LUMBER

TOP CHORD	2x4 SP No.2
BOT CHORD	2x6 SP No.2
WEBS	2x4 SP No.3
WEDGE	Left: 2x4 SP No.3
	Right: 2x4 SP No.3

BRACING

TOP CHORD	Structural wood sheathing directly applied or 4-11-10 oc purlins.
BOT CHORD	Rigid ceiling directly applied or 10-0-0 oc bracing.

REACTIONS (size) 2=0-3-8, 6=0-3-8
Max Horiz 2=-249 (LC 10)
Max Uplift 2=-233 (LC 12), 6=-233 (LC 13)
Max Grav 2=878 (LC 1), 6=878 (LC 1)

FORCES (lb) - Maximum Compression/Maximum Tension

TOP CHORD	1-2=0/31, 2-3=-1112/280, 3-4=-1279/491, 4-5=-1278/490, 5-6=-1110/280, 6-7=0/31
BOT CHORD	2-10=-256/1020, 8-10=-78/635, 6-8=-115/862
WEBS	3-10=-404/343, 5-8=-404/343, 4-10=-321/680, 4-8=-320/679

NOTES

1) Unbalanced roof live loads have been considered for this design.
2) Wind: ASCE 7-10; Vult=130mph (3-second gust) Vasd=103mph; TCDL=6.0psf; BCDL=6.0psf; h=25ft; Cat. II; Exp C; Enclosed; MWFRS (envelope) exterior zone and C-C Exterior (2) -0-11-0 to 2-1-0, Interior (1) 2-1-0 to 10-3-8, Exterior (2) 10-3-8 to 13-3-8, Interior (1) 13-3-8 to 21-6-0 zone; cantilever left and right exposed ; end vertical left and right exposed;C-C for members and forces & MWFRS for reactions shown; Lumber DOL=1.60 plate grip DOL=1.60
3) This truss has been designed for a 10.0 psf bottom chord live load nonconcurrent with any other live loads.
4) * This truss has been designed for a live load of 20.0psf on the bottom chord in all areas where a rectangle 3-06-00 tall by 2-00-00 wide will fit between the bottom chord and any other members, with BCDL = 10.0psf.
5) All bearings are assumed to be SP No.2 .
6) Provide mechanical connection (by others) of truss to bearing plate capable of withstanding 233 lb uplift at joint 2 and 233 lb uplift at joint 6.

LOAD CASE(S) Standard

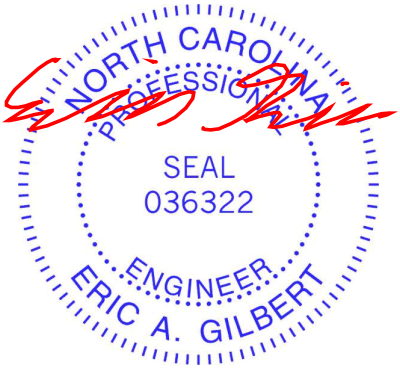

March 12,2025

WARNING - Verify design parameters and READ NOTES ON THIS AND INCLUDED MITEK REFERENCE PAGE MII-7473 rev. 1/2/2023 BEFORE USE.
Design valid for use only with MiTek® connectors. This design is based only upon parameters shown, and is for an individual building component, not a truss system. Before use, the building designer must verify the applicability of design parameters and properly incorporate this design into the overall building design. Bracing indicated is to prevent buckling of individual truss web and/or chord members only. Additional temporary and permanent bracing is always required for stability and to prevent collapse with possible personal injury and property damage. For general guidance regarding the fabrication, storage, delivery, erection and bracing of trusses and truss systems, see **ANSI/TPI1 Quality Criteria and DSB-22** available from Truss Plate Institute (www.tpinst.org) and **BCSI Building Component Safety Information** available from the Structural Building Component Association (www.sbcacomponents.com)

ENGINEERING BY TRENCO A MiTek Affiliate
818 Soundside Road
Edenton, NC 27932

Job	Truss	Truss Type	Qty	Ply	JSJ Builders
4938997	B03	Common	4	1	Job Reference (optional) I71926211

Builders FirstSource (Sumter, SC), Sumter, SC - 29153,

Run: 8.83 S Feb 18 2025 Print: 8.830 S Feb 18 2025 MiTek Industries, Inc. Mon Mar 10 12:56:51 Page: 1
ID:7igS1Txy?cFoXsuyyR_ZhtzWiEs-RfC?PsB70Hq3NSgPqnL8w3uITXbGKWrCDoi7J4zJC?f

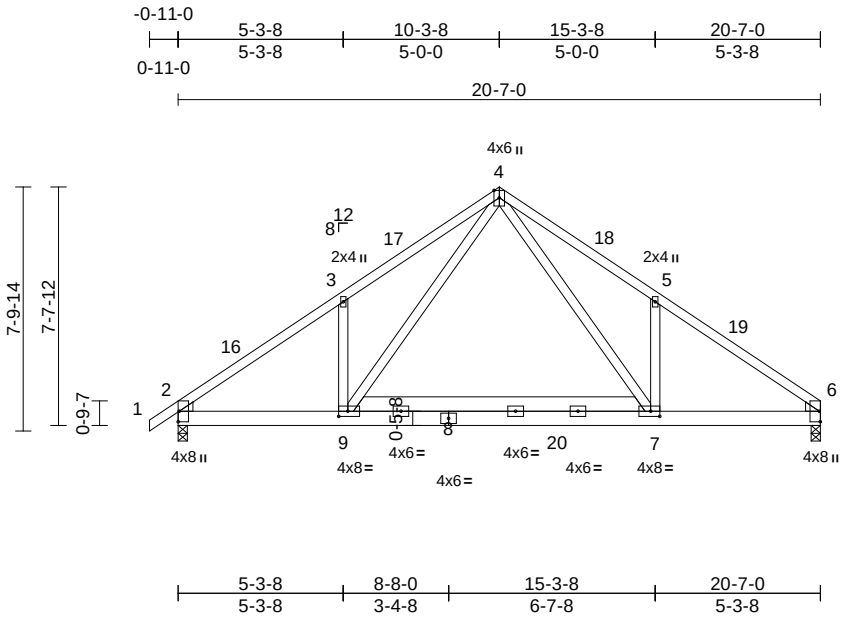

Scale = 1:73.9

Plate Offsets (X, Y): [2:Edge,0-0-6], [6:Edge,0-0-6], [7:0-3-8,0-2-0], [9:0-3-8,0-2-0]

Loading	(psf)	Spacing	2-0-0	CSI		DEFL	in	(loc)	l/defl	L/d	PLATES	GRIP
TCLL (roof)	20.0	Plate Grip DOL	1.15	TC	0.30	Vert(LL)	-0.06	7-9	>999	360	MT20	244/190
TCDL	10.0	Lumber DOL	1.15	BC	0.25	Vert(CT)	-0.11	7-9	>999	240		
BCLL	0.0*	Rep Stress Incr	YES	WB	0.47	Horz(CT)	0.02	6	n/a	n/a		
BCDL	10.0	Code	IRC2015/TPI2014	Matrix-MS		Wind(LL)	0.04	7-9	>999	240	Weight: 146 lb	FT = 20%

LUMBER

TOP CHORD 2x4 SP No.2
BOT CHORD 2x6 SP No.2
WEBS 2x4 SP No.3
WEDGE Left: 2x4 SP No.3
Right: 2x4 SP No.3

BRACING

TOP CHORD Structural wood sheathing directly applied or 4-11-10 oc purlins.
BOT CHORD Rigid ceiling directly applied or 10-0-0 oc bracing.

REACTIONS (size) 2=0-3-8, 6=0-3-8
Max Horiz 2=242 (LC 9)
Max Uplift 2=-234 (LC 12), 6=-203 (LC 13)
Max Grav 2=880 (LC 1), 6=822 (LC 1)

FORCES (lb) - Maximum Compression/Maximum Tension
TOP CHORD 1-2=0/31, 2-3=-1114/281, 3-4=-1281/492, 4-5=-1278/494, 5-6=-1118/294
BOT CHORD 2-9=-270/1011, 7-9=-92/626, 6-7=-142/863
WEBS 3-9=-404/343, 5-7=-404/344, 4-9=-320/679, 4-7=-324/687

NOTES

1) Unbalanced roof live loads have been considered for this design.
2) Wind: ASCE 7-10; Vult=130mph (3-second gust) Vasd=103mph; TCDL=6.0psf; BCDL=6.0psf; h=25ft; Cat. II; Exp C; Enclosed; MWFRS (envelope) exterior zone and C-C Exterior (2) -0-11-0 to 2-1-0, Interior (1) 2-1-0 to 10-3-8, Exterior (2) 10-3-8 to 13-3-8, Interior (1) 13-3-8 to 20-7-0 zone; cantilever left and right exposed ; end vertical left and right exposed;C-C for members and forces & MWFRS for reactions shown; Lumber DOL=1.60 plate grip DOL=1.60
3) This truss has been designed for a 10.0 psf bottom chord live load nonconcurrent with any other live loads.
4) * This truss has been designed for a live load of 20.0psf on the bottom chord in all areas where a rectangle 3-06-00 tall by 2-00-00 wide will fit between the bottom chord and any other members, with BCDL = 10.0psf.
5) All bearings are assumed to be SP No.2 .
6) Provide mechanical connection (by others) of truss to bearing plate capable of withstanding 234 lb uplift at joint 2 and 203 lb uplift at joint 6.

LOAD CASE(S) Standard

March 12,2025

WARNING - Verify design parameters and READ NOTES ON THIS AND INCLUDED MITEK REFERENCE PAGE MII-7473 rev. 1/2/2023 BEFORE USE.
Design valid for use only with MiTek® connectors. This design is based only upon parameters shown, and is for an individual building component, not a truss system. Before use, the building designer must verify the applicability of design parameters and properly incorporate this design into the overall building design. Bracing indicated is to prevent buckling of individual truss web and/or chord members only. Additional temporary and permanent bracing is always required for stability and to prevent collapse with possible personal injury and property damage. For general guidance regarding the fabrication, storage, delivery, erection and bracing of trusses and truss systems, see **ANSI/TPI1 Quality Criteria and DSB-22** available from Truss Plate Institute (www.tpinst.org) and **BCSI Building Component Safety Information** available from the Structural Building Component Association (www.sbcacomponents.com)

ENGINEERING BY TRENCO A MiTek Affiliate
818 Soundside Road
Edenton, NC 27932

Job	Truss	Truss Type	Qty	Ply	JSJ Builders
4938997	B04	Common Girder	1	**2**	I71926212 Job Reference (optional)

Builders FirstSource (Sumter, SC), Sumter, SC - 29153, Run: 8.83 S Feb 18 2025 Print: 8.830 S Feb 18 2025 MiTek Industries, Inc. Mon Mar 10 12:56:51 Page: 1
ID:7igS1Txy?cFoXsuyyR_ZhtzWiEs-RfC?PsB70Hq3NSgPqnL8w3uITXbGKWrCDoi7J4zJC?f

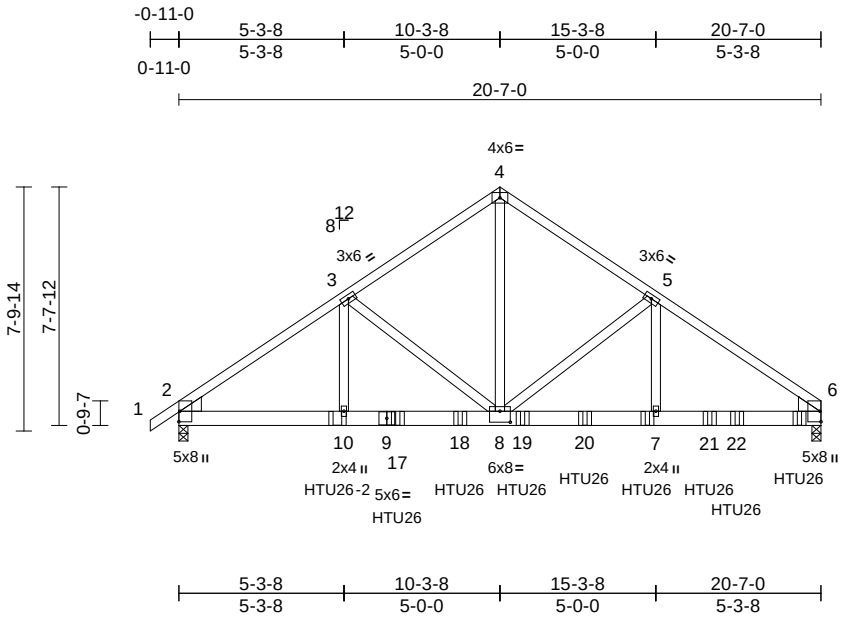

Scale = 1:73.9

Plate Offsets (X, Y): [2:Edge,0-0-6], [6:Edge,0-0-6], [8:0-4-0,0-4-4]

Loading	(psf)	**Spacing**	2-0-0	**CSI**		**DEFL**	in	(loc)	l/defl	L/d	**PLATES**	**GRIP**
TCLL (roof)	20.0	Plate Grip DOL	1.15	TC	0.42	Vert(LL)	-0.09	8-10	>999	360	MT20	244/190
TCDL	10.0	Lumber DOL	1.15	BC	0.85	Vert(CT)	-0.16	8-10	>999	240		
BCLL	0.0*	Rep Stress Incr	NO	WB	0.41	Horz(CT)	0.03	6	n/a	n/a		
BCDL	10.0	Code	IRC2015/TPI2014	Matrix-MS		Wind(LL)	0.12	8-10	>999	240	Weight: 258 lb	FT = 20%

LUMBER

TOP CHORD 2x4 SP No.2
BOT CHORD 2x6 SP No.2
WEBS 2x4 SP No.2
WEDGE Left: 2x6 SP No.2
Right: 2x6 SP No.2

BRACING

TOP CHORD Structural wood sheathing directly applied or 5-5-9 oc purlins.
BOT CHORD Rigid ceiling directly applied or 10-0-0 oc bracing.

REACTIONS (size) 2=0-3-8, 6=0-3-8
Max Horiz 2=242 (LC 7)
Max Uplift 2=-1379 (LC 8), 6=-1551 (LC 9)
Max Grav 2=3021 (LC 1), 6=3474 (LC 1)

FORCES (lb) - Maximum Compression/Maximum Tension
TOP CHORD 1-2=0/31, 2-3=-4539/2130, 3-4=-3354/1641, 4-5=-3376/1643, 5-6=-4121/2033
BOT CHORD 2-10=-1802/3766, 8-10=-1802/3766, 7-8=-1585/3356, 6-7=-1585/3356
WEBS 4-8=-1638/3335, 5-8=-897/669, 5-7=-450/698, 3-8=-1271/761, 3-10=-582/1175

NOTES

1) 2-ply truss to be connected together with 10d (0.131"x3") nails as follows:
Top chords connected as follows: 2x4 - 1 row at 0-9-0 oc.
Bottom chords connected as follows: 2x6 - 2 rows staggered at 0-9-0 oc.
Web connected as follows: 2x4 - 1 row at 0-9-0 oc.
2) All loads are considered equally applied to all plies, except if noted as front (F) or back (B) face in the LOAD CASE(S) section. Ply to ply connections have been provided to distribute only loads noted as (F) or (B), unless otherwise indicated.
3) Unbalanced roof live loads have been considered for this design.
4) Wind: ASCE 7-10; Vult=130mph (3-second gust) Vasd=103mph; TCDL=6.0psf; BCDL=6.0psf; h=25ft; Cat. II; Exp C; Enclosed; MWFRS (envelope) exterior zone; cantilever left and right exposed ; end vertical left and right exposed; Lumber DOL=1.60 plate grip DOL=1.60
5) This truss has been designed for a 10.0 psf bottom chord live load nonconcurrent with any other live loads.
6) * This truss has been designed for a live load of 20.0psf on the bottom chord in all areas where a rectangle 3-06-00 tall by 2-00-00 wide will fit between the bottom chord and any other members.
7) All bearings are assumed to be SP No.2 .
8) Provide mechanical connection (by others) of truss to bearing plate capable of withstanding 1379 lb uplift at joint 2 and 1551 lb uplift at joint 6.
9) Use Simpson Strong-Tie HTU26-2 (20-10d Girder, 14-10d Truss) or equivalent at 5-1-0 from the left end to connect truss(es) to back face of bottom chord.
10) Use Simpson Strong-Tie HTU26 (10-16d Girder, 20-10dx1 1/2 Truss, Single Ply Girder) or equivalent spaced at 4-0-0 oc max. starting at 7-0-4 from the left end to 19-10-12 to connect truss(es) to back face of bottom chord.
11) Use Simpson Strong-Tie HTU26 (10-16d Girder, 14-10dx1 1/2 Truss) or equivalent at 9-0-4 from the left end to connect truss(es) to back face of bottom chord.
12) Fill all nail holes where hanger is in contact with lumber.

LOAD CASE(S) Standard

1) Dead + Roof Live (balanced): Lumber Increase=1.15, Plate Increase=1.15
Uniform Loads (lb/ft)
Vert: 1-4=-60, 4-6=-60, 11-14=-20
Concentrated Loads (lb)
Vert: 7=-446 (B), 10=-1039 (B), 16=-898 (B), 17=-270 (B), 18=-1114 (B), 19=-483 (B), 20=-525 (B), 21=-9 (B), 22=-9 (B)

March 12,2025

WARNING - Verify design parameters and READ NOTES ON THIS AND INCLUDED MITEK REFERENCE PAGE MII-7473 rev. 1/2/2023 BEFORE USE.
Design valid for use only with MiTek® connectors. This design is based only upon parameters shown, and is for an individual building component, not a truss system. Before use, the building designer must verify the applicability of design parameters and properly incorporate this design into the overall building design. Bracing indicated is to prevent buckling of individual truss web and/or chord members only. Additional temporary and permanent bracing is always required for stability and to prevent collapse with possible personal injury and property damage. For general guidance regarding the fabrication, storage, delivery, erection and bracing of trusses and truss systems, see **ANSI/TPI1 Quality Criteria and DSB-22** available from Truss Plate Institute (www.tpinst.org) and **BCSI Building Component Safety Information** available from the Structural Building Component Association (www.sbcacomponents.com)

ENGINEERING BY TRENCO A MiTek Affiliate
818 Soundside Road
Edenton, NC 27932

Job	Truss	Truss Type	Qty	Ply	JSJ Builders
4938997	C01	Roof Special Girder	1	3	I71926213 Job Reference (optional)

Builders FirstSource (Sumter, SC), Sumter, SC - 29153,

Run: 8.83 S Feb 18 2025 Print: 8.830 S Feb 18 2025 MiTek Industries, Inc. Mon Mar 10 12:56:51 Page: 1
ID:X71qizmjMZe16V1oj149WazWhVJ-RfC?PsB70Hq3NSgPqnL8w3uITXbGKWrCDoi7J4zJC?f

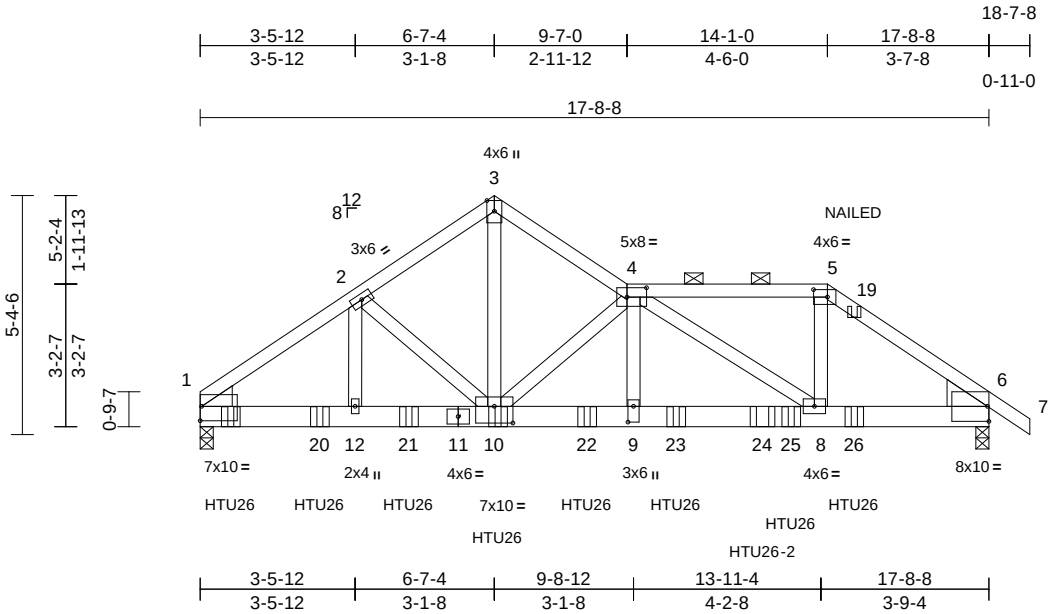

Scale = 1:51.7

Plate Offsets (X, Y): [1:Edge,0-3-14], [4:0-5-4,0-2-8], [5:0-3-12,0-2-0], [6:Edge,0-4-1], [9:0-4-4,0-1-8], [10:0-5-0,0-4-8]

Loading	(psf)	Spacing	2-0-0	CSI		DEFL	in	(loc)	l/defl	L/d	PLATES	GRIP
TCLL (roof)	20.0	Plate Grip DOL	1.15	TC	0.48	Vert(LL)	-0.10	8-9	>999	360	MT20	244/190
TCDL	10.0	Lumber DOL	1.15	BC	0.75	Vert(CT)	-0.20	8-9	>999	240		
BCLL	0.0*	Rep Stress Incr	NO	WB	0.63	Horz(CT)	0.05	6	n/a	n/a		
BCDL	10.0	Code	IRC2015/TPI2014	Matrix-MS		Wind(LL)	0.13	8-9	>999	240	Weight: 342 lb	FT = 20%

LUMBER

TOP CHORD 2x4 SP No.2
BOT CHORD 2x6 SP No.2 *Except* 11-6:2x6 SP 2400F 2.0E or 2x6 SP DSS
WEBS 2x4 SP No.2
WEDGE Left: 2x6 SP No.2
Right: 2x8 SP 2400F 2.0E or DSS

BRACING

TOP CHORD Structural wood sheathing directly applied or 6-0-0 oc purlins, except 2-0-0 oc purlins (6-0-0 max.): 4-5.
BOT CHORD Rigid ceiling directly applied or 10-0-0 oc bracing.

REACTIONS (size) 1=0-3-8, 6=0-3-8
Max Horiz 1=-160 (LC 4)
Max Uplift 1=-1865 (LC 8), 6=-2006 (LC 9)
Max Grav 1=6945 (LC 1), 6=5450 (LC 1)

FORCES (lb) - Maximum Compression/Maximum Tension
TOP CHORD 1-2=-8464/2338, 2-3=-7267/2126, 3-4=-7250/2101, 4-5=-7023/2645, 5-6=-8335/3070, 6-7=0/31
BOT CHORD 1-12=-1925/6937, 10-12=-1925/6935, 9-10=-3284/10917, 8-9=-3331/11077, 6-8=-2408/6790
WEBS 2-12=-314/1442, 2-10=-1210/391, 3-10=-2211/7694, 4-10=-6716/2397, 4-9=-915/3111, 4-8=-4835/1033, 5-8=-1618/4521

NOTES

1) 3-ply truss to be connected together with 10d (0.131"x3") nails as follows:
Top chords connected as follows: 2x4 - 1 row at 0-9-0 oc.
Bottom chords connected as follows: 2x6 - 3 rows staggered at 0-5-0 oc.
Web connected as follows: 2x4 - 1 row at 0-9-0 oc.
2) All loads are considered equally applied to all plies, except if noted as front (F) or back (B) face in the LOAD CASE(S) section. Ply to ply connections have been provided to distribute only loads noted as (F) or (B), unless otherwise indicated.
3) Unbalanced roof live loads have been considered for this design.
4) Wind: ASCE 7-10; Vult=130mph (3-second gust) Vasd=103mph; TCDL=6.0psf; BCDL=6.0psf; h=25ft; Cat. II; Exp C; Enclosed; MWFRS (envelope) exterior zone; cantilever left and right exposed ; end vertical left and right exposed; Lumber DOL=1.60 plate grip DOL=1.60
5) Provide adequate drainage to prevent water ponding.
6) This truss has been designed for a 10.0 psf bottom chord live load nonconcurrent with any other live loads.
7) * This truss has been designed for a live load of 20.0psf on the bottom chord in all areas where a rectangle 3-06-00 tall by 2-00-00 wide will fit between the bottom chord and any other members.
8) Bearings are assumed to be: Joint 1 SP No.2 , Joint 6 SP 2400F 2.0E or DSS .
9) Provide mechanical connection (by others) of truss to bearing plate capable of withstanding 1865 lb uplift at joint 1 and 2006 lb uplift at joint 6.
10) Graphical purlin representation does not depict the size or the orientation of the purlin along the top and/or bottom chord.
11) Use Simpson Strong-Tie HTU26 (20-10d Girder, 11-10dx1 1/2 Truss) or equivalent spaced at 1-5-0 oc max. starting at 13-3-4 from the left end to 14-8-4 to connect truss(es) to front face of bottom chord.
12) Use Simpson Strong-Tie HTU26 (10-16d Girder, 14-10dx1 1/2 Truss) or equivalent spaced at 2-0-0 oc max. starting at 0-8-4 from the left end to 10-8-4 to connect truss(es) to back face of bottom chord.
13) Use Simpson Strong-Tie HTU26-2 (20-10d Girder, 14-10d Truss) or equivalent at 12-7-8 from the left end to connect truss(es) to back face of bottom chord.
14) Fill all nail holes where hanger is in contact with lumber.
15) "NAILED" indicates 3-10d (0.148"x3") or 3-12d (0.148"x3.25") toe-nails per NDS guidlines.

LOAD CASE(S) Standard

1) Dead + Roof Live (balanced): Lumber Increase=1.15, Plate Increase=1.15
Uniform Loads (lb/ft)
Vert: 1-3=-60, 3-4=-60, 4-5=-60, 5-7=-60, 13-16=-20
Concentrated Loads (lb)
Vert: 10=-1337 (B), 15=-1333 (B), 20=-1336 (B), 21=-1333 (B), 22=-1337 (B), 23=-1337 (B), 24=-2289 (B), 25=-421 (F), 26=-201 (F)

March 12,2025

WARNING - Verify design parameters and READ NOTES ON THIS AND INCLUDED MITEK REFERENCE PAGE MII-7473 rev. 1/2/2023 BEFORE USE.
Design valid for use only with MiTek® connectors. This design is based only upon parameters shown, and is for an individual building component, not a truss system. Before use, the building designer must verify the applicability of design parameters and properly incorporate this design into the overall building design. Bracing indicated is to prevent buckling of individual truss web and/or chord members only. Additional temporary and permanent bracing is always required for stability and to prevent collapse with possible personal injury and property damage. For general guidance regarding the fabrication, storage, delivery, erection and bracing of trusses and truss systems, see **ANSI/TPI1 Quality Criteria and DSB-22** available from Truss Plate Institute (www.tpinst.org) and **BCSI Building Component Safety Information** available from the Structural Building Component Association (www.sbcacomponents.com)

ENGINEERING BY TRENCO A MiTek Affiliate
818 Soundside Road
Edenton, NC 27932

Job	Truss	Truss Type	Qty	Ply	JSJ Builders
4938997	CJ1	Diagonal Hip Girder	4	1	I71926214 Job Reference (optional)

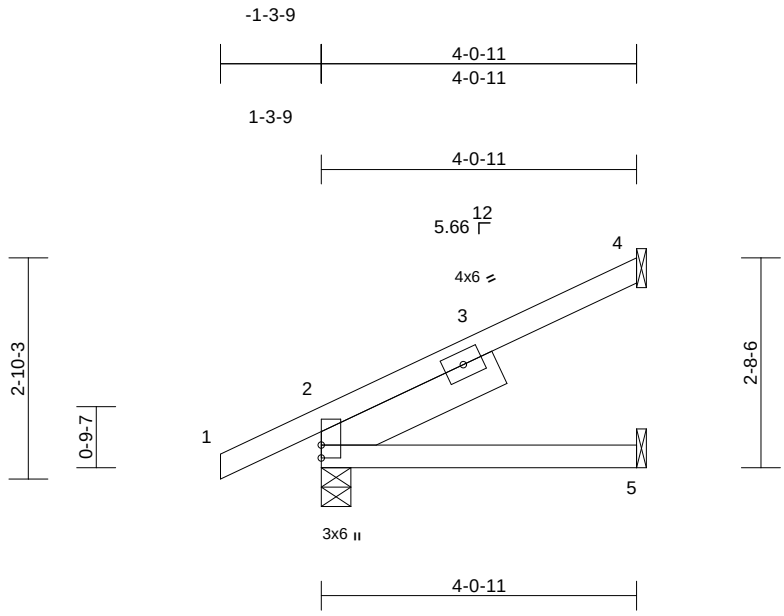

Scale = 1:29.7

Plate Offsets (X, Y): [2:Edge,0-0-0]

Loading	(psf)	Spacing	2-0-0	CSI		DEFL	in	(loc)	l/defl	L/d	PLATES	GRIP
TCLL (roof)	20.0	Plate Grip DOL	1.15	TC	0.20	Vert(LL)	0.02	5-8	>999	240	MT20	244/190
TCDL	10.0	Lumber DOL	1.15	BC	0.17	Vert(CT)	-0.01	5-8	>999	240		
BCLL	0.0*	Rep Stress Incr	NO	WB	0.00	Horz(CT)	-0.01	2	n/a	n/a		
BCDL	10.0	Code	IRC2015/TPI2014	Matrix-MP							Weight: 21 lb	FT = 20%

LUMBER
TOP CHORD 2x4 SP No.2
BOT CHORD 2x4 SP No.2
SLIDER Left 2x6 SP No.2 -- 2-6-0

BRACING
TOP CHORD Structural wood sheathing directly applied or 4-0-11 oc purlins.
BOT CHORD Rigid ceiling directly applied or 10-0-0 oc bracing.

REACTIONS (size) 2=0-4-9, 4= Mechanical, 5= Mechanical
Max Horiz 2=139 (LC 12)
Max Uplift 2=-107 (LC 12), 4=-81 (LC 12), 5=-1 (LC 12)
Max Grav 2=144 (LC 1), 4=67 (LC 1), 5=55 (LC 3)

FORCES (lb) - Maximum Compression/Maximum Tension
TOP CHORD 1-2=0/33, 2-4=-122/103
BOT CHORD 2-5=-130/37

NOTES
1) Wind: ASCE 7-10; Vult=130mph (3-second gust) Vasd=103mph; TCDL=6.0psf; BCDL=6.0psf; h=25ft; Cat. II; Exp C; Enclosed; MWFRS (envelope) exterior zone; cantilever left and right exposed ; end vertical left and right exposed; Lumber DOL=1.60 plate grip DOL=1.60

2) This truss has been designed for a 10.0 psf bottom chord live load nonconcurrent with any other live loads.
3) * This truss has been designed for a live load of 20.0psf on the bottom chord in all areas where a rectangle 3-06-00 tall by 2-00-00 wide will fit between the bottom chord and any other members.
4) Bearings are assumed to be: , Joint 2 SP No.2 .
5) Refer to girder(s) for truss to truss connections.
6) Provide mechanical connection (by others) of truss to bearing plate capable of withstanding 81 lb uplift at joint 4, 107 lb uplift at joint 2 and 1 lb uplift at joint 5.
7) In the LOAD CASE(S) section, loads applied to the face of the truss are noted as front (F) or back (B).

LOAD CASE(S) Standard
1) Dead + Roof Live (balanced): Lumber Increase=1.15, Plate Increase=1.15
Uniform Loads (lb/ft)
Vert: 1-2=-60
Trapezoidal Loads (lb/ft)
Vert: 2=0 (F=30, B=30)-to-7=-11 (F=25, B=25), 7=-11 (F=25, B=25)-to-3=-30 (F=15, B=15), 3=-30 (F=15, B=15)-to-4=-61 (F=0, B=0), 6=0 (F=10, B=10)-to-8=-4 (F=8, B=8), 8=-4 (F=8, B=8)-to-5=-20 (F=0, B=0)

March 12,2025

WARNING - Verify design parameters and READ NOTES ON THIS AND INCLUDED MITEK REFERENCE PAGE MII-7473 rev. 1/2/2023 BEFORE USE.
Design valid for use only with MiTek® connectors. This design is based only upon parameters shown, and is for an individual building component, not a truss system. Before use, the building designer must verify the applicability of design parameters and properly incorporate this design into the overall building design. Bracing indicated is to prevent buckling of individual truss web and/or chord members only. Additional temporary and permanent bracing is always required for stability and to prevent collapse with possible personal injury and property damage. For general guidance regarding the fabrication, storage, delivery, erection and bracing of trusses and truss systems, see **ANSI/TPI1 Quality Criteria and DSB-22** available from Truss Plate Institute (www.tpinst.org) and **BCSI Building Component Safety Information** available from the Structural Building Component Association (www.sbcacomponents.com)

ENGINEERING BY TRENCO A MiTek Affiliate
818 Soundside Road
Edenton, NC 27932

Job	Truss	Truss Type	Qty	Ply	JSJ Builders
4938997	D01	Common Supported Gable	1	1	I71926215 Job Reference (optional)

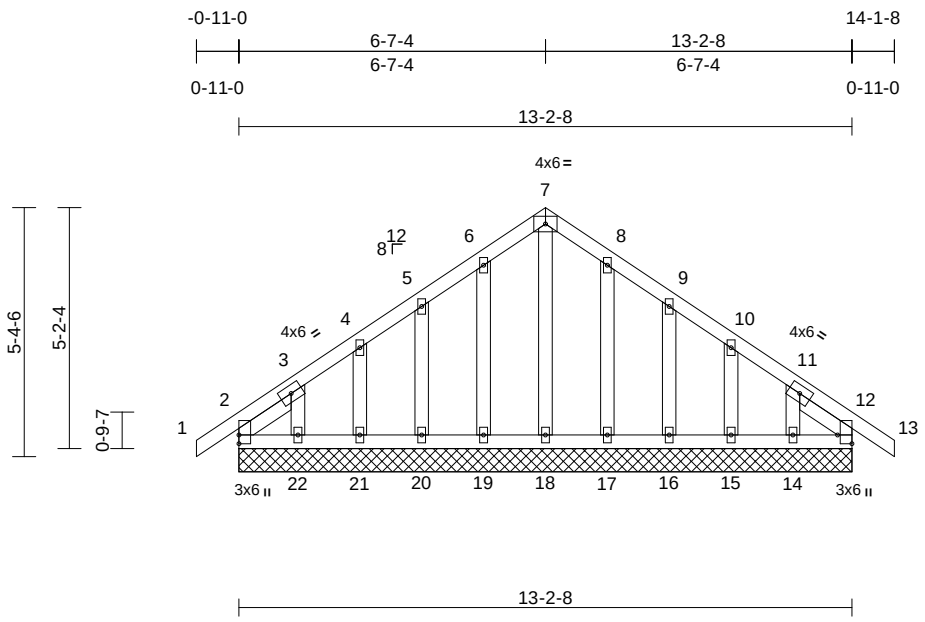

Scale = 1:49.6

Plate Offsets (X, Y): [12:Edge,0-3-11]

Loading	(psf)	Spacing	2-0-0	CSI		DEFL	in	(loc)	l/defl	L/d	PLATES	GRIP
TCLL (roof)	20.0	Plate Grip DOL	1.15	TC	0.06	Vert(LL)	n/a	-	n/a	999	MT20	244/190
TCDL	10.0	Lumber DOL	1.15	BC	0.03	Vert(CT)	n/a	-	n/a	999		
BCLL	0.0*	Rep Stress Incr	YES	WB	0.05	Horz(CT)	0.00	12	n/a	n/a		
BCDL	10.0	Code	IRC2015/TPI2014	Matrix-MS							Weight: 87 lb	FT = 20%

LUMBER

TOP CHORD 2x4 SP No.2
BOT CHORD 2x4 SP No.2
OTHERS 2x4 SP No.3
SLIDER Left 2x4 SP No.2 -- 1-5-3, Right 2x4 SP No.2 -- 1-5-3

BRACING

TOP CHORD Structural wood sheathing directly applied or 6-0-0 oc purlins.
BOT CHORD Rigid ceiling directly applied or 10-0-0 oc bracing.

REACTIONS (size) 2=13-2-8, 12=13-2-8, 14=13-2-8, 15=13-2-8, 16=13-2-8, 17=13-2-8, 18=13-2-8, 19=13-2-8, 20=13-2-8, 21=13-2-8, 22=13-2-8
Max Horiz 2=167 (LC 11)
Max Uplift 2=-66 (LC 8), 12=-20 (LC 9), 14=-105 (LC 13), 15=-64 (LC 13), 16=-74 (LC 13), 17=-59 (LC 13), 19=-62 (LC 12), 20=-73 (LC 12), 21=-63 (LC 12), 22=-119 (LC 12)
Max Grav 2=155 (LC 20), 12=128 (LC 1), 14=120 (LC 20), 15=121 (LC 20), 16=121 (LC 20), 17=123 (LC 20), 18=128 (LC 22), 19=126 (LC 19), 20=120 (LC 19), 21=120 (LC 19), 22=135 (LC 19)

FORCES (lb) - Maximum Compression/Maximum Tension
TOP CHORD 1-2=0/31, 2-3=-40/52, 3-4=-101/96, 4-5=-86/88, 5-6=-98/121, 6-7=-138/160, 7-8=-138/160, 8-9=-98/112, 9-10=-51/54, 10-11=-51/38, 11-12=-27/37, 12-13=0/31
BOT CHORD 2-22=-76/121, 21-22=-76/121, 20-21=-76/121, 19-20=-76/121, 18-19=-76/121, 17-18=-76/121, 16-17=-76/121, 15-16=-76/121, 14-15=-76/121, 12-14=-76/121
WEBS 7-18=-111/57, 6-19=-101/79, 5-20=-112/88, 4-21=-108/84, 3-22=-128/116, 8-17=-101/75, 9-16=-112/89, 10-15=-108/84, 11-14=-132/105

NOTES

1) Unbalanced roof live loads have been considered for this design.
2) Wind: ASCE 7-10; Vult=130mph (3-second gust) Vasd=103mph; TCDL=6.0psf; BCDL=6.0psf; h=25ft; Cat. II; Exp C; Enclosed; MWFRS (envelope) exterior zone and C-C Corner (3) -0-11-0 to 2-1-0, Exterior (2) 2-1-0 to 6-7-4, Corner (3) 6-7-4 to 9-7-4, Exterior (2) 9-7-4 to 14-1-8 zone; cantilever left and right exposed ; end vertical left and right exposed;C-C for members and forces & MWFRS for reactions shown; Lumber DOL=1.60 plate grip DOL=1.60
3) Truss designed for wind loads in the plane of the truss only. For studs exposed to wind (normal to the face), see Standard Industry Gable End Details as applicable, or consult qualified building designer as per ANSI/TPI 1.
4) All plates are 2x4 (||) MT20 unless otherwise indicated.
5) Gable requires continuous bottom chord bearing.
6) Gable studs spaced at 1-4-0 oc.
7) This truss has been designed for a 10.0 psf bottom chord live load nonconcurrent with any other live loads.
8) * This truss has been designed for a live load of 20.0psf on the bottom chord in all areas where a rectangle 3-06-00 tall by 2-00-00 wide will fit between the bottom chord and any other members.
9) All bearings are assumed to be SP No.2 .
10) Provide mechanical connection (by others) of truss to bearing plate capable of withstanding 66 lb uplift at joint 2, 20 lb uplift at joint 12, 62 lb uplift at joint 19, 73 lb uplift at joint 20, 63 lb uplift at joint 21, 119 lb uplift at joint 22, 59 lb uplift at joint 17, 74 lb uplift at joint 16, 64 lb uplift at joint 15, 105 lb uplift at joint 14, 66 lb uplift at joint 2 and 20 lb uplift at joint 12.
11) Beveled plate or shim required to provide full bearing surface with truss chord at joint(s) 2, 23.

LOAD CASE(S) Standard

March 12,2025

WARNING - Verify design parameters and READ NOTES ON THIS AND INCLUDED MITEK REFERENCE PAGE MII-7473 rev. 1/2/2023 BEFORE USE.
Design valid for use only with MiTek® connectors. This design is based only upon parameters shown, and is for an individual building component, not a truss system. Before use, the building designer must verify the applicability of design parameters and properly incorporate this design into the overall building design. Bracing indicated is to prevent buckling of individual truss web and/or chord members only. Additional temporary and permanent bracing is always required for stability and to prevent collapse with possible personal injury and property damage. For general guidance regarding the fabrication, storage, delivery, erection and bracing of trusses and truss systems, see **ANSI/TPI1 Quality Criteria and DSB-22** available from Truss Plate Institute (www.tpinst.org) and **BCSI Building Component Safety Information** available from the Structural Building Component Association (www.sbcacomponents.com)

ENGINEERING BY TRENCO A MiTek Affiliate
818 Soundside Road
Edenton, NC 27932

Job	Truss	Truss Type	Qty	Ply	JSJ Builders
4938997	D02	Common	2	1	I71926216 Job Reference (optional)

Builders FirstSource (Sumter, SC), Sumter, SC - 29153,

Run: 8.83 S Feb 18 2025 Print: 8.830 S Feb 18 2025 MiTek Industries, Inc. Mon Mar 10 12:56:52 Page: 1
ID:054XHjES1AclF8?K9iuQ_EzWiDC-RfC?PsB70Hq3NSgPqnL8w3uITXbGKWrCDoi7J4zJC?f

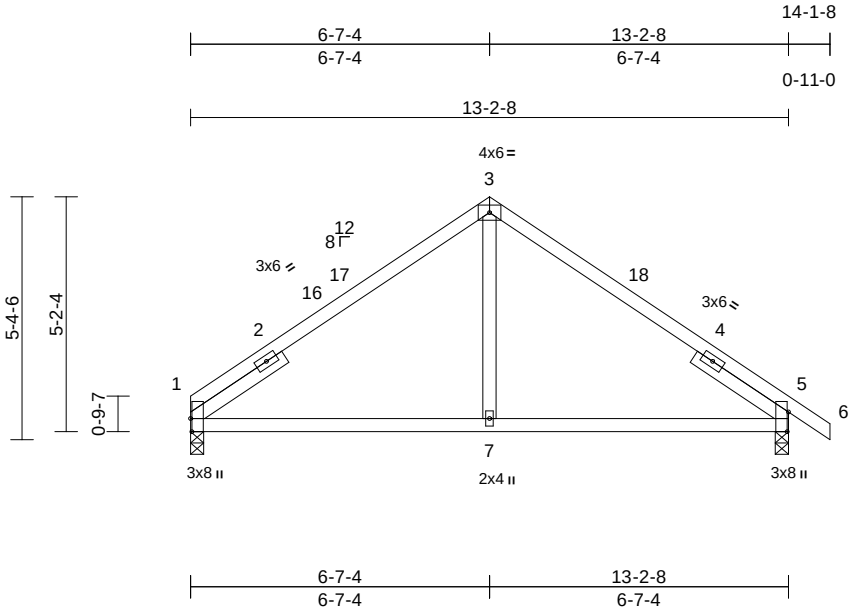

Scale = 1:50.9

Plate Offsets (X, Y): [1:0-3-8,Edge], [5:0-5-4,Edge]

Loading	(psf)	Spacing	2-0-0	CSI		DEFL	in	(loc)	l/defl	L/d	PLATES	GRIP
TCLL (roof)	20.0	Plate Grip DOL	1.15	TC	0.52	Vert(LL)	-0.06	7-10	>999	360	MT20	244/190
TCDL	10.0	Lumber DOL	1.15	BC	0.43	Vert(CT)	-0.09	7-10	>999	240		
BCLL	0.0*	Rep Stress Incr	YES	WB	0.11	Horz(CT)	-0.04	1	n/a	n/a		
BCDL	10.0	Code	IRC2015/TPI2014	Matrix-MS		Wind(LL)	0.09	7-10	>999	240	Weight: 60 lb	FT = 20%

LUMBER

TOP CHORD	2x4 SP No.2
BOT CHORD	2x4 SP No.2
WEBS	2x4 SP No.3
SLIDER	Left 2x4 SP No.2 -- 2-6-0, Right 2x4 SP No.2 -- 2-6-0

BRACING

TOP CHORD	Structural wood sheathing directly applied or 6-0-0 oc purlins.
BOT CHORD	Rigid ceiling directly applied or 10-0-0 oc bracing.

REACTIONS (size) 1=0-3-8, 5=0-3-8
Max Horiz 1=-160 (LC 10)
Max Uplift 1=-128 (LC 12), 5=-159 (LC 13)
Max Grav 1=526 (LC 1), 5=585 (LC 1)

FORCES (lb) - Maximum Compression/Maximum Tension

TOP CHORD	1-3=-555/207, 3-5=-549/202, 5-6=0/31
BOT CHORD	1-7=-305/430, 5-7=-208/430
WEBS	3-7=0/290

NOTES

1) Unbalanced roof live loads have been considered for this design.
2) Wind: ASCE 7-10; Vult=130mph (3-second gust) Vasd=103mph; TCDL=6.0psf; BCDL=6.0psf; h=25ft; Cat. II; Exp C; Enclosed; MWFRS (envelope) exterior zone and C-C Exterior (2) 0-0-0 to 3-0-0, Interior (1) 3-0-0 to 6-7-4, Exterior (2) 6-7-4 to 9-7-4, Interior (1) 9-7-4 to 14-1-8 zone; cantilever left and right exposed ; end vertical left and right exposed;C-C for members and forces & MWFRS for reactions shown; Lumber DOL=1.60 plate grip DOL=1.60
3) This truss has been designed for a 10.0 psf bottom chord live load nonconcurrent with any other live loads.
4) * This truss has been designed for a live load of 20.0psf on the bottom chord in all areas where a rectangle 3-06-00 tall by 2-00-00 wide will fit between the bottom chord and any other members.
5) All bearings are assumed to be SP No.2 .
6) Provide mechanical connection (by others) of truss to bearing plate capable of withstanding 128 lb uplift at joint 1 and 159 lb uplift at joint 5.

LOAD CASE(S) Standard

March 12,2025

WARNING - Verify design parameters and READ NOTES ON THIS AND INCLUDED MITEK REFERENCE PAGE MII-7473 rev. 1/2/2023 BEFORE USE.
Design valid for use only with MiTek® connectors. This design is based only upon parameters shown, and is for an individual building component, not a truss system. Before use, the building designer must verify the applicability of design parameters and properly incorporate this design into the overall building design. Bracing indicated is to prevent buckling of individual truss web and/or chord members only. Additional temporary and permanent bracing is always required for stability and to prevent collapse with possible personal injury and property damage. For general guidance regarding the fabrication, storage, delivery, erection and bracing of trusses and truss systems, see **ANSI/TPI1 Quality Criteria and DSB-22** available from Truss Plate Institute (www.tpinst.org) and **BCSI Building Component Safety Information** available from the Structural Building Component Association (www.sbcacomponents.com)

ENGINEERING BY TRENCO A MiTek Affiliate
818 Soundside Road
Edenton, NC 27932

Job	Truss	Truss Type	Qty	Ply	JSJ Builders
4938997	D03	Common	2	1	I71926217 Job Reference (optional)

Builders FirstSource (Sumter, SC), Sumter, SC - 29153,

Run: 8.83 S Feb 18 2025 Print: 8.830 S Feb 18 2025 MiTek Industries, Inc. Mon Mar 10 12:56:52 Page: 1
ID:gPo3opNzCs72h_wesD5ETmzWiD0-RfC?PsB70Hq3NSgPqnL8w3uITXbGKWrCDoi7J4zJC?f

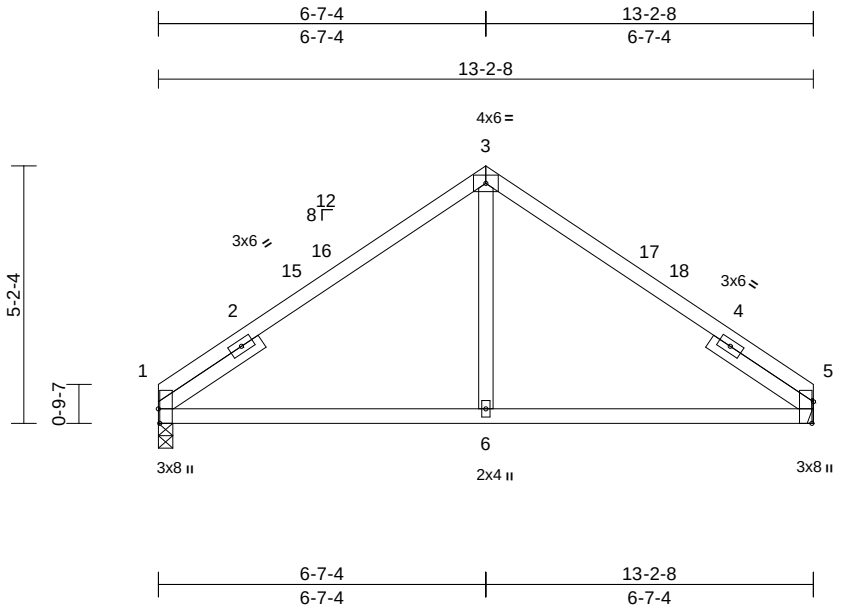

Scale = 1:46.5

Plate Offsets (X, Y): [1:0-3-8,Edge], [5:0-5-4,Edge]

Loading	(psf)	Spacing	2-0-0	CSI		DEFL	in	(loc)	l/defl	L/d	PLATES	GRIP
TCLL (roof)	20.0	Plate Grip DOL	1.15	TC	0.52	Vert(LL)	-0.06	6-9	>999	360	MT20	244/190
TCDL	10.0	Lumber DOL	1.15	BC	0.43	Vert(CT)	-0.09	6-9	>999	240		
BCLL	0.0*	Rep Stress Incr	YES	WB	0.11	Horz(CT)	-0.04	1	n/a	n/a		
BCDL	10.0	Code	IRC2015/TPI2014	Matrix-MS		Wind(LL)	0.09	6-9	>999	240	Weight: 58 lb	FT = 20%

LUMBER

TOP CHORD	2x4 SP No.2
BOT CHORD	2x4 SP No.2
WEBS	2x4 SP No.3
SLIDER	Left 2x4 SP No.2 -- 2-6-0, Right 2x4 SP No.2 -- 2-6-0

BRACING

TOP CHORD	Structural wood sheathing directly applied or 6-0-0 oc purlins.
BOT CHORD	Rigid ceiling directly applied or 10-0-0 oc bracing.

REACTIONS (size) 1=0-3-8, 5= Mechanical
Max Horiz 1=147 (LC 9)
Max Uplift 1=-129 (LC 12), 5=-129 (LC 13)
Max Grav 1=528 (LC 1), 5=528 (LC 1)

FORCES (lb) - Maximum Compression/Maximum Tension

TOP CHORD	1-3=-555/208, 3-5=-555/208
BOT CHORD	1-6=-316/423, 5-6=-232/423
WEBS	3-6=0/290

NOTES

1) Unbalanced roof live loads have been considered for this design.
2) Wind: ASCE 7-10; Vult=130mph (3-second gust) Vasd=103mph; TCDL=6.0psf; BCDL=6.0psf; h=25ft; Cat. II; Exp C; Enclosed; MWFRS (envelope) exterior zone and C-C Exterior (2) 0-0-0 to 3-0-0, Interior (1) 3-0-0 to 6-7-4, Exterior (2) 6-7-4 to 9-7-4, Interior (1) 9-7-4 to 13-2-8 zone; cantilever left and right exposed ; end vertical left and right exposed;C-C for members and forces & MWFRS for reactions shown; Lumber DOL=1.60 plate grip DOL=1.60
3) This truss has been designed for a 10.0 psf bottom chord live load nonconcurrent with any other live loads.
4) * This truss has been designed for a live load of 20.0psf on the bottom chord in all areas where a rectangle 3-06-00 tall by 2-00-00 wide will fit between the bottom chord and any other members.
5) Bearings are assumed to be: Joint 1 SP No.2 .
6) Refer to girder(s) for truss to truss connections.
7) Provide mechanical connection (by others) of truss to bearing plate capable of withstanding 129 lb uplift at joint 1 and 129 lb uplift at joint 5.

LOAD CASE(S) Standard

March 12,2025

WARNING - Verify design parameters and READ NOTES ON THIS AND INCLUDED MITEK REFERENCE PAGE MII-7473 rev. 1/2/2023 BEFORE USE.
Design valid for use only with MiTek® connectors. This design is based only upon parameters shown, and is for an individual building component, not a truss system. Before use, the building designer must verify the applicability of design parameters and properly incorporate this design into the overall building design. Bracing indicated is to prevent buckling of individual truss web and/or chord members only. Additional temporary and permanent bracing is always required for stability and to prevent collapse with possible personal injury and property damage. For general guidance regarding the fabrication, storage, delivery, erection and bracing of trusses and truss systems, see **ANSI/TPI1 Quality Criteria and DSB-22** available from Truss Plate Institute (www.tpinst.org) and **BCSI Building Component Safety Information** available from the Structural Building Component Association (www.sbcacomponents.com)

ENGINEERING BY TRENCO A MiTek Affiliate
818 Soundside Road
Edenton, NC 27932

Job	Truss	Truss Type	Qty	Ply	JSJ Builders
4938997	E01	Hip Girder	1	2	I71926218 Job Reference (optional)

Builders FirstSource (Sumter, SC), Sumter, SC - 29153,

Run: 8.83 S Feb 18 2025 Print: 8.830 S Feb 18 2025 MiTek Industries, Inc. Mon Mar 10 12:56:52 Page: 1
ID:lBoNVdRDis8PogyomOURdmzWhPI-RfC?PsB70Hq3NSgPqnL8w3uITXbGKWrCDoi7J4zJC?f

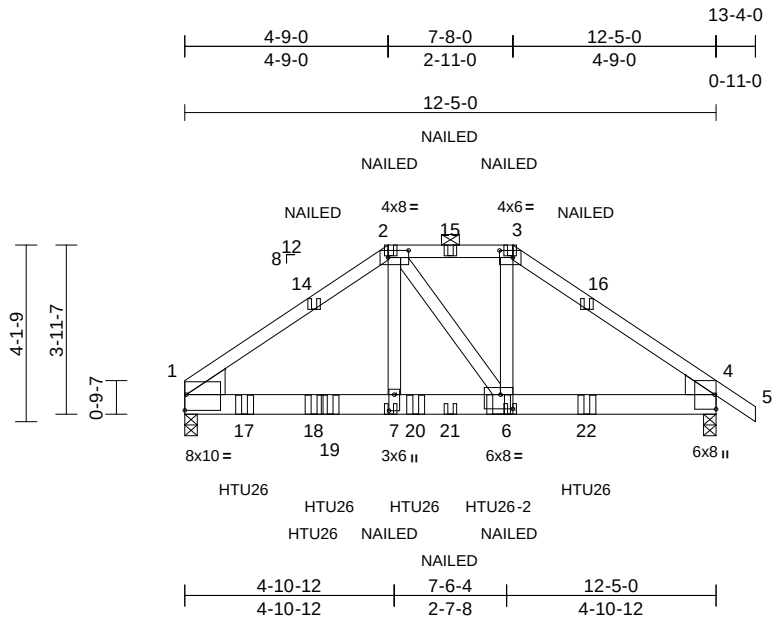

Scale = 1:53.8

Plate Offsets (X, Y): [1:Edge,0-4-6], [2:0-5-12,0-2-0], [3:0-3-12,0-2-0], [4:Edge,0-0-6], [6:0-3-8,0-4-0], [7:0-4-8,0-1-8]

Loading	(psf)	Spacing	2-0-0	CSI		DEFL	in	(loc)	l/defl	L/d	PLATES	GRIP
TCLL (roof)	20.0	Plate Grip DOL	1.15	TC	0.37	Vert(LL)	-0.05	7-13	>999	360	MT20	244/190
TCDL	10.0	Lumber DOL	1.15	BC	0.94	Vert(CT)	-0.09	7-13	>999	240		
BCLL	0.0*	Rep Stress Incr	NO	WB	0.37	Horz(CT)	0.03	4	n/a	n/a		
BCDL	10.0	Code	IRC2015/TPI2014	Matrix-MS		Wind(LL)	0.06	7-13	>999	240	Weight: 145 lb	FT = 20%

LUMBER

TOP CHORD 2x4 SP No.2
BOT CHORD 2x6 SP No.2
WEBS 2x4 SP No.2
WEDGE Left: 2x8 SP 2400F 2.0E or DSS
Right: 2x6 SP No.2

BRACING

TOP CHORD Structural wood sheathing directly applied or 5-2-1 oc purlins, except
2-0-0 oc purlins (6-0-0 max.): 2-3.
BOT CHORD Rigid ceiling directly applied or 10-0-0 oc bracing.

REACTIONS (size) 1=0-3-8, 4=0-3-8
Max Horiz 1=-120 (LC 6)
Max Uplift 1=-1517 (LC 8), 4=-1413 (LC 9)
Max Grav 1=4593 (LC 1), 4=3319 (LC 1)

FORCES (lb) - Maximum Compression/Maximum Tension
TOP CHORD 1-2=-5170/1914, 2-3=-3994/1782, 3-4=-4800/2049, 4-5=0/31
BOT CHORD 1-7=-1557/4265, 6-7=-1584/4388, 4-6=-1616/3896
WEBS 2-7=-688/3031, 2-6=-686/141, 3-6=-928/2421

NOTES

1) 2-ply truss to be connected together with 10d (0.131"x3") nails as follows:
Top chords connected as follows: 2x4 - 1 row at 0-9-0 oc.
Bottom chords connected as follows: 2x6 - 2 rows staggered at 0-4-0 oc.
Web connected as follows: 2x4 - 1 row at 0-9-0 oc.
2) All loads are considered equally applied to all plies, except if noted as front (F) or back (B) face in the LOAD CASE(S) section. Ply to ply connections have been provided to distribute only loads noted as (F) or (B), unless otherwise indicated.
3) Unbalanced roof live loads have been considered for this design.
4) Wind: ASCE 7-10; Vult=130mph (3-second gust) Vasd=103mph; TCDL=6.0psf; BCDL=6.0psf; h=25ft; Cat. II; Exp C; Enclosed; MWFRS (envelope) exterior zone; cantilever left and right exposed ; end vertical left and right exposed; Lumber DOL=1.60 plate grip DOL=1.60
5) Provide adequate drainage to prevent water ponding.
6) This truss has been designed for a 10.0 psf bottom chord live load nonconcurrent with any other live loads.
7) * This truss has been designed for a live load of 20.0psf on the bottom chord in all areas where a rectangle 3-06-00 tall by 2-00-00 wide will fit between the bottom chord and any other members.
8) All bearings are assumed to be SP No.2 .
9) Provide mechanical connection (by others) of truss to bearing plate capable of withstanding 1413 lb uplift at joint 4 and 1517 lb uplift at joint 1.
10) Graphical purlin representation does not depict the size or the orientation of the purlin along the top and/or bottom chord.
11) Use Simpson Strong-Tie HTU26 (10-16d Girder, 14-10dx1 1/2 Truss) or equivalent spaced at 2-0-0 oc max. starting at 1-4-12 from the left end to 5-4-12 to connect truss(es) to front face of bottom chord.
12) Use Simpson Strong-Tie HTU26-2 (20-10d Girder, 14-10d Truss) or equivalent at 7-4-0 from the left end to connect truss(es) to front face of bottom chord.
13) Use Simpson Strong-Tie HTU26 (10-16d Girder, 14-10dx1 1/2 Truss) or equivalent spaced at 6-4-8 oc max. starting at 3-0-4 from the left end to 9-4-12 to connect truss(es) to back face of bottom chord.
14) Fill all nail holes where hanger is in contact with lumber.
15) "NAILED" indicates 3-10d (0.148"x3") or 3-12d (0.148"x3.25") toe-nails per NDS guidlines.

LOAD CASE(S) Standard

1) Dead + Roof Live (balanced): Lumber Increase=1.15, Plate Increase=1.15
Uniform Loads (lb/ft)
Vert: 1-2=-60, 2-3=-60, 3-5=-60, 8-11=-20
Concentrated Loads (lb)
Vert: 2=-63 (B), 3=-63 (B), 7=-39 (B), 6=-2328 (F=-2289, B=-39), 15=-63 (B), 17=-1337 (F), 18=-129 (B), 19=-1337 (F), 20=-1337 (F), 21=-39 (B), 22=-129 (B)

March 12,2025

WARNING - Verify design parameters and READ NOTES ON THIS AND INCLUDED MITEK REFERENCE PAGE MII-7473 rev. 1/2/2023 BEFORE USE.
Design valid for use only with MiTek® connectors. This design is based only upon parameters shown, and is for an individual building component, not a truss system. Before use, the building designer must verify the applicability of design parameters and properly incorporate this design into the overall building design. Bracing indicated is to prevent buckling of individual truss web and/or chord members only. Additional temporary and permanent bracing is always required for stability and to prevent collapse with possible personal injury and property damage. For general guidance regarding the fabrication, storage, delivery, erection and bracing of trusses and truss systems, see **ANSI/TPI1 Quality Criteria and DSB-22** available from Truss Plate Institute (www.tpinst.org) and **BCSI Building Component Safety Information** available from the Structural Building Component Association (www.sbcacomponents.com)

ENGINEERING BY TRENCO A MiTek Affiliate
818 Soundside Road
Edenton, NC 27932

Job	Truss	Truss Type	Qty	Ply	JSJ Builders
4938997	JA1	Jack-Open	26	1	I71926219 Job Reference (optional)

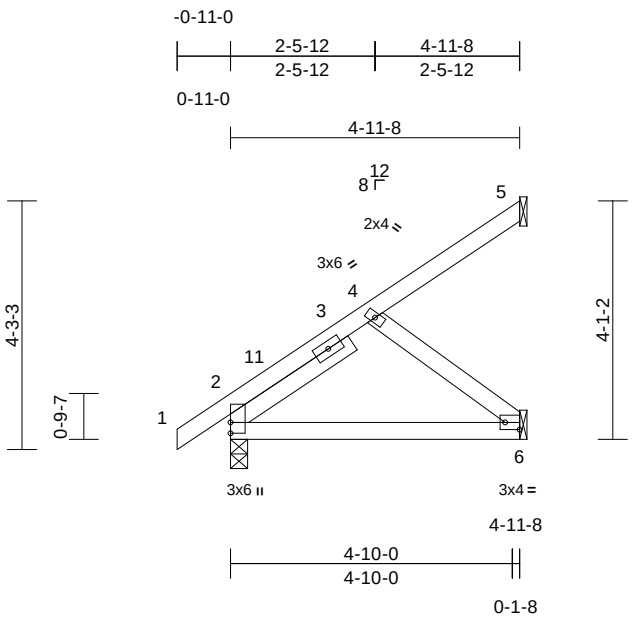

Scale = 1:39.5

Plate Offsets (X, Y): [6:Edge,0-1-8]

Loading	(psf)	Spacing	2-0-0	CSI		DEFL	in	(loc)	l/defl	L/d	PLATES	GRIP
TCLL (roof)	20.0	Plate Grip DOL	1.15	TC	0.10	Vert(LL)	-0.02	6-9	>999	360	MT20	244/190
TCDL	10.0	Lumber DOL	1.15	BC	0.19	Vert(CT)	-0.03	6-9	>999	240		
BCLL	0.0*	Rep Stress Incr	YES	WB	0.06	Horz(CT)	0.00	2	n/a	n/a		
BCDL	10.0	Code	IRC2015/TPI2014	Matrix-MP		Wind(LL)	0.00	6-9	>999	240	Weight: 27 lb	FT = 20%

LUMBER
TOP CHORD 2x4 SP No.2
BOT CHORD 2x4 SP No.2
WEBS 2x4 SP No.3
SLIDER Left 2x4 SP No.2 -- 2-6-0

BRACING
TOP CHORD Structural wood sheathing directly applied or 4-11-8 oc purlins.
BOT CHORD Rigid ceiling directly applied or 10-0-0 oc bracing.

REACTIONS (size) 2=0-3-8, 5= Mechanical, 6= Mechanical
Max Horiz 2=197 (LC 12)
Max Uplift 2=-29 (LC 12), 5=-65 (LC 12), 6=-73 (LC 12)
Max Grav 2=258 (LC 1), 5=71 (LC 19), 6=149 (LC 19)

FORCES (lb) - Maximum Compression/Maximum Tension
TOP CHORD 1-2=0/31, 2-4=-302/0, 4-5=-65/44
BOT CHORD 2-6=-176/191
WEBS 4-6=-242/172

NOTES
1) Wind: ASCE 7-10; Vult=130mph (3-second gust) Vasd=103mph; TCDL=6.0psf; BCDL=6.0psf; h=25ft; Cat. II; Exp C; Enclosed; MWFRS (envelope) exterior zone and C-C Exterior (2) -0-11-0 to 2-4-4, Interior (1) 2-4-4 to 4-10-12 zone; cantilever left and right exposed ; end vertical left and right exposed;C-C for members and forces & MWFRS for reactions shown; Lumber DOL=1.60 plate grip DOL=1.60
2) This truss has been designed for a 10.0 psf bottom chord live load nonconcurrent with any other live loads.
3) * This truss has been designed for a live load of 20.0psf on the bottom chord in all areas where a rectangle 3-06-00 tall by 2-00-00 wide will fit between the bottom chord and any other members.
4) Bearings are assumed to be: , Joint 2 SP No.2 .
5) Refer to girder(s) for truss to truss connections.
6) Provide mechanical connection (by others) of truss to bearing plate capable of withstanding 65 lb uplift at joint 5, 29 lb uplift at joint 2 and 73 lb uplift at joint 6.

LOAD CASE(S) Standard

NORTH CAROLINA PROFESSIONAL SEAL 036322 ENGINEER ERIC A. GILBERT

March 12,2025

WARNING - Verify design parameters and READ NOTES ON THIS AND INCLUDED MITEK REFERENCE PAGE MII-7473 rev. 1/2/2023 BEFORE USE.
Design valid for use only with MiTek® connectors. This design is based only upon parameters shown, and is for an individual building component, not a truss system. Before use, the building designer must verify the applicability of design parameters and properly incorporate this design into the overall building design. Bracing indicated is to prevent buckling of individual truss web and/or chord members only. Additional temporary and permanent bracing is always required for stability and to prevent collapse with possible personal injury and property damage. For general guidance regarding the fabrication, storage, delivery, erection and bracing of trusses and truss systems, see **ANSI/TPI1 Quality Criteria and DSB-22** available from Truss Plate Institute (www.tpinst.org) and **BCSI Building Component Safety Information** available from the Structural Building Component Association (www.sbcacomponents.com)

ENGINEERING BY TRENCO A MiTek Affiliate
818 Soundside Road
Edenton, NC 27932

Job	Truss	Truss Type	Qty	Ply	JSJ Builders
4938997	JA2	Jack-Open	3	1	I71926220 Job Reference (optional)

Builders FirstSource (Sumter, SC), Sumter, SC - 29153,

Run: 8.83 S Feb 18 2025 Print: 8.830 S Feb 18 2025 MiTek Industries, Inc. Mon Mar 10 12:56:53 Page: 1
ID:Nva?jQ7IPWRddIkDR4JStEzWiJo-RfC?PsB70Hq3NSgPqnL8w3uITXbGKWrCDoi7J4zJC?f

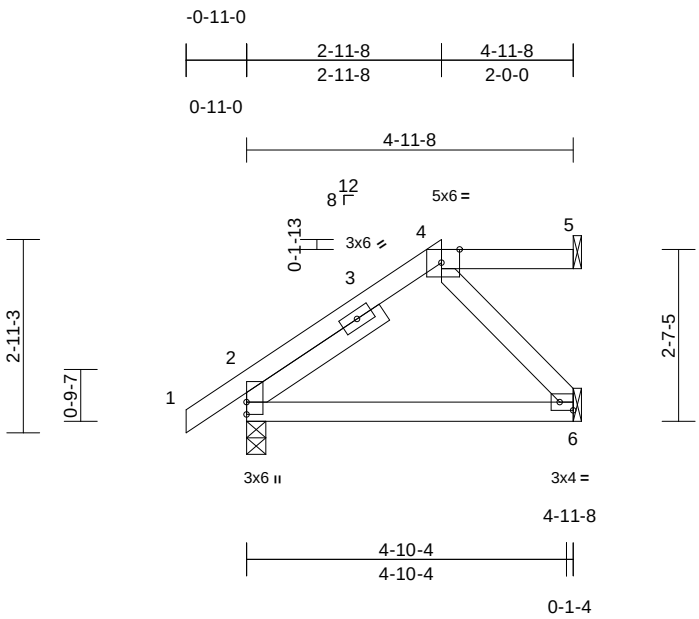

Scale = 1:35

Plate Offsets (X, Y): [4:0-3-5,Edge], [6:Edge,0-1-8]

Loading	(psf)	Spacing	2-0-0	CSI		DEFL	in	(loc)	l/defl	L/d	PLATES	GRIP
TCLL (roof)	20.0	Plate Grip DOL	1.15	TC	0.16	Vert(LL)	-0.02	6-9	>999	360	MT20	244/190
TCDL	10.0	Lumber DOL	1.15	BC	0.20	Vert(CT)	-0.04	6-9	>999	240		
BCLL	0.0*	Rep Stress Incr	YES	WB	0.04	Horz(CT)	0.01	2	n/a	n/a		
BCDL	10.0	Code	IRC2015/TPI2014	Matrix-MP		Wind(LL)	0.01	6-9	>999	240	Weight: 26 lb	FT = 20%

LUMBER

TOP CHORD 2x4 SP No.2
BOT CHORD 2x4 SP No.2
WEBS 2x4 SP No.3
SLIDER Left 2x4 SP No.2 -- 2-6-0

BRACING

TOP CHORD Structural wood sheathing directly applied or 4-11-8 oc purlins, except 2-0-0 oc purlins: 4-5.
BOT CHORD Rigid ceiling directly applied or 10-0-0 oc bracing.

REACTIONS (size) 2=0-3-8, 5= Mechanical, 6= Mechanical
Max Horiz 2=125 (LC 12)
Max Uplift 2=-65 (LC 12), 5=-39 (LC 8), 6=-42 (LC 12)
Max Grav 2=258 (LC 1), 5=58 (LC 1), 6=132 (LC 1)

FORCES (lb) - Maximum Compression/Maximum Tension
TOP CHORD 1-2=0/31, 2-4=-319/66, 4-5=-1/2
BOT CHORD 2-6=-140/93
WEBS 4-6=-144/126

NOTES

1) Unbalanced roof live loads have been considered for this design.
2) Wind: ASCE 7-10; Vult=130mph (3-second gust) Vasd=103mph; TCDL=6.0psf; BCDL=6.0psf; h=25ft; Cat. II; Exp C; Enclosed; MWFRS (envelope) exterior zone and C-C Exterior (2) -0-11-0 to 2-1-0, Interior (1) 2-1-0 to 2-11-8, Exterior (2) 2-11-8 to 4-10-12 zone; cantilever left and right exposed ; end vertical left and right exposed;C-C for members and forces & MWFRS for reactions shown; Lumber DOL=1.60 plate grip DOL=1.60
3) Provide adequate drainage to prevent water ponding.
4) This truss has been designed for a 10.0 psf bottom chord live load nonconcurrent with any other live loads.
5) * This truss has been designed for a live load of 20.0psf on the bottom chord in all areas where a rectangle 3-06-00 tall by 2-00-00 wide will fit between the bottom chord and any other members.
6) Bearings are assumed to be: , Joint 2 SP No.2 .
7) Refer to girder(s) for truss to truss connections.
8) Provide mechanical connection (by others) of truss to bearing plate capable of withstanding 39 lb uplift at joint 5, 65 lb uplift at joint 2 and 42 lb uplift at joint 6.
9) Graphical purlin representation does not depict the size or the orientation of the purlin along the top and/or bottom chord.

LOAD CASE(S) Standard

March 12,2025

WARNING - Verify design parameters and READ NOTES ON THIS AND INCLUDED MITEK REFERENCE PAGE MII-7473 rev. 1/2/2023 BEFORE USE.
Design valid for use only with MiTek® connectors. This design is based only upon parameters shown, and is for an individual building component, not a truss system. Before use, the building designer must verify the applicability of design parameters and properly incorporate this design into the overall building design. Bracing indicated is to prevent buckling of individual truss web and/or chord members only. Additional temporary and permanent bracing is always required for stability and to prevent collapse with possible personal injury and property damage. For general guidance regarding the fabrication, storage, delivery, erection and bracing of trusses and truss systems, see **ANSI/TPI1 Quality Criteria and DSB-22** available from Truss Plate Institute (www.tpinst.org) and **BCSI Building Component Safety Information** available from the Structural Building Component Association (www.sbcacomponents.com)

ENGINEERING BY TRENCO A MiTek Affiliate
818 Soundside Road
Edenton, NC 27932

Job	Truss	Truss Type	Qty	Ply	JSJ Builders
4938997	JA3	Jack-Open	3	1	I71926221 Job Reference (optional)

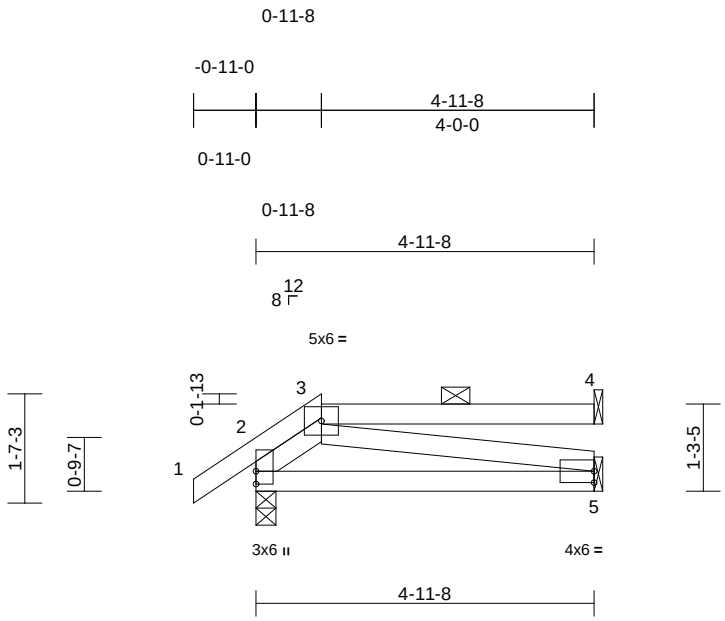

Scale = 1:33.8

Loading	(psf)	Spacing	2-0-0	CSI		DEFL	in	(loc)	l/defl	L/d	PLATES	GRIP
TCLL (roof)	20.0	Plate Grip DOL	1.15	TC	0.31	Vert(LL)	-0.01	5-8	>999	360	MT20	244/190
TCDL	10.0	Lumber DOL	1.15	BC	0.22	Vert(CT)	-0.03	5-8	>999	240		
BCLL	0.0*	Rep Stress Incr	YES	WB	0.06	Horz(CT)	0.00	4	n/a	n/a		
BCDL	10.0	Code	IRC2015/TPI2014	Matrix-MP		Wind(LL)	0.00	5-8	>999	240	Weight: 25 lb	FT = 20%

LUMBER

TOP CHORD 2x4 SP No.2
BOT CHORD 2x4 SP No.2
WEBS 2x4 SP No.3
SLIDER Left 2x4 SP No.2 -- 1-2-13

BRACING

TOP CHORD Structural wood sheathing directly applied or 4-11-8 oc purlins, except 2-0-0 oc purlins: 3-4.
BOT CHORD Rigid ceiling directly applied or 10-0-0 oc bracing.

REACTIONS (size) 2=0-3-8, 4= Mechanical, 5= Mechanical
Max Horiz 2=53 (LC 12)
Max Uplift 2=-61 (LC 12), 4=-79 (LC 8)
Max Grav 2=257 (LC 1), 4=118 (LC 1), 5=107 (LC 3)

FORCES (lb) - Maximum Compression/Maximum Tension
TOP CHORD 1-2=0/31, 2-3=-237/137, 3-4=-3/1
BOT CHORD 2-5=-108/163
WEBS 3-5=-167/109

NOTES

1) Unbalanced roof live loads have been considered for this design.
2) Wind: ASCE 7-10; Vult=130mph (3-second gust) Vasd=103mph; TCDL=6.0psf; BCDL=6.0psf; h=25ft; Cat. II; Exp C; Enclosed; MWFRS (envelope) exterior zone and C-C Exterior (2) zone; cantilever left and right exposed ; end vertical left and right exposed;C-C for members and forces & MWFRS for reactions shown; Lumber DOL=1.60 plate grip DOL=1.60
3) Provide adequate drainage to prevent water ponding.
4) This truss has been designed for a 10.0 psf bottom chord live load nonconcurrent with any other live loads.
5) * This truss has been designed for a live load of 20.0psf on the bottom chord in all areas where a rectangle 3-06-00 tall by 2-00-00 wide will fit between the bottom chord and any other members.
6) Bearings are assumed to be: , Joint 2 SP No.2 .
7) Refer to girder(s) for truss to truss connections.
8) Provide mechanical connection (by others) of truss to bearing plate capable of withstanding 79 lb uplift at joint 4 and 61 lb uplift at joint 2.
9) Graphical purlin representation does not depict the size or the orientation of the purlin along the top and/or bottom chord.

LOAD CASE(S) Standard

March 12,2025

WARNING - Verify design parameters and READ NOTES ON THIS AND INCLUDED MITEK REFERENCE PAGE MII-7473 rev. 1/2/2023 BEFORE USE.
Design valid for use only with MiTek® connectors. This design is based only upon parameters shown, and is for an individual building component, not a truss system. Before use, the building designer must verify the applicability of design parameters and properly incorporate this design into the overall building design. Bracing indicated is to prevent buckling of individual truss web and/or chord members only. Additional temporary and permanent bracing is always required for stability and to prevent collapse with possible personal injury and property damage. For general guidance regarding the fabrication, storage, delivery, erection and bracing of trusses and truss systems, see **ANSI/TPI1 Quality Criteria and DSB-22** available from Truss Plate Institute (www.tpinst.org) and **BCSI Building Component Safety Information** available from the Structural Building Component Association (www.sbcacomponents.com)

ENGINEERING BY TRENCO A MiTek Affiliate
818 Soundside Road
Edenton, NC 27932

Job	Truss	Truss Type	Qty	Ply	JSJ Builders
4938997	JA4	Jack-Open Girder	1	1	I71926222 Job Reference (optional)

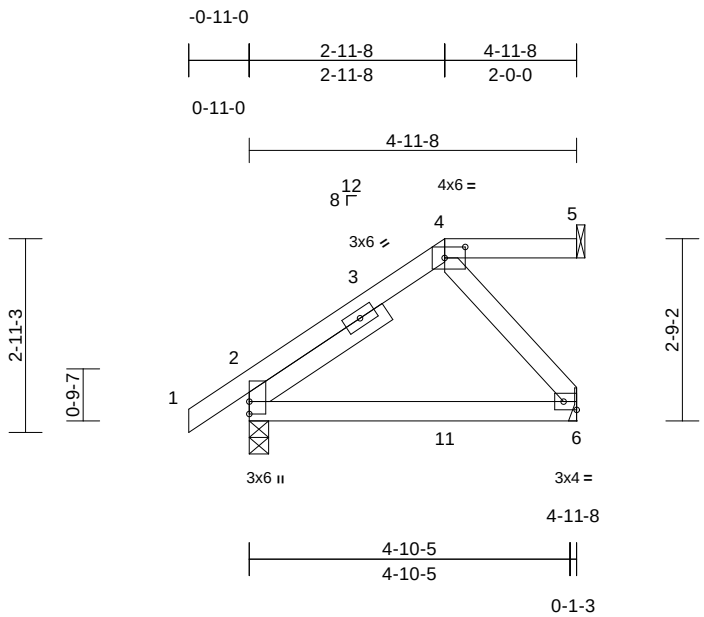

Scale = 1:34.9

Plate Offsets (X, Y): [4:0-3-12,0-2-0], [6:Edge,0-1-8]

Loading	(psf)	Spacing	2-0-0	CSI		DEFL	in	(loc)	l/defl	L/d	PLATES	GRIP
TCLL (roof)	20.0	Plate Grip DOL	1.15	TC	0.17	Vert(LL)	-0.02	6-9	>999	360	MT20	244/190
TCDL	10.0	Lumber DOL	1.15	BC	0.25	Vert(CT)	-0.04	6-9	>999	240		
BCLL	0.0*	Rep Stress Incr	NO	WB	0.04	Horz(CT)	-0.01	2	n/a	n/a		
BCDL	10.0	Code	IRC2015/TPI2014	Matrix-MP		Wind(LL)	0.02	6-9	>999	240	Weight: 26 lb	FT = 20%

LUMBER

TOP CHORD 2x4 SP No.2
BOT CHORD 2x4 SP No.2
WEBS 2x4 SP No.3
SLIDER Left 2x4 SP No.2 -- 2-6-0

BRACING

TOP CHORD Structural wood sheathing directly applied or 4-11-8 oc purlins, except 2-0-0 oc purlins: 4-5.
BOT CHORD Rigid ceiling directly applied or 10-0-0 oc bracing.

REACTIONS (size) 2=0-3-8, 5= Mechanical, 6= Mechanical
Max Horiz 2=132 (LC 8)
Max Uplift 2=-100 (LC 8), 5=-39 (LC 4), 6=-102 (LC 8)
Max Grav 2=274 (LC 15), 5=58 (LC 1), 6=170 (LC 15)

FORCES (lb) - Maximum Compression/Maximum Tension
TOP CHORD 1-2=0/31, 2-4=-324/126, 4-5=0/0
BOT CHORD 2-6=-132/93
WEBS 4-6=-147/132

NOTES

1) Unbalanced roof live loads have been considered for this design.
2) Wind: ASCE 7-10; Vult=130mph (3-second gust) Vasd=103mph; TCDL=6.0psf; BCDL=6.0psf; h=25ft; Cat. II; Exp C; Enclosed; MWFRS (envelope) exterior zone; cantilever left and right exposed ; end vertical left and right exposed; Lumber DOL=1.60 plate grip DOL=1.60
3) Provide adequate drainage to prevent water ponding.
4) This truss has been designed for a 10.0 psf bottom chord live load nonconcurrent with any other live loads.
5) * This truss has been designed for a live load of 20.0psf on the bottom chord in all areas where a rectangle 3-06-00 tall by 2-00-00 wide will fit between the bottom chord and any other members.
6) Bearings are assumed to be: , Joint 2 SP No.2 .
7) Refer to girder(s) for truss to truss connections.
8) Refer to girder(s) for truss to truss connections.
9) Provide mechanical connection (by others) of truss to bearing plate capable of withstanding 39 lb uplift at joint 5, 100 lb uplift at joint 2 and 102 lb uplift at joint 6.
10) Graphical purlin representation does not depict the size or the orientation of the purlin along the top and/or bottom chord.
11) Hanger(s) or other connection device(s) shall be provided sufficient to support concentrated load(s) 97 lb down and 71 lb up at 2-11-8 on top chord, and 43 lb down and 40 lb up at 2-11-8 on bottom chord. The design/selection of such connection device(s) is the responsibility of others.
12) In the LOAD CASE(S) section, loads applied to the face of the truss are noted as front (F) or back (B).

LOAD CASE(S) Standard

1) Dead + Roof Live (balanced): Lumber Increase=1.15, Plate Increase=1.15
Uniform Loads (lb/ft)
Vert: 1-4=-60, 4-5=-60, 6-7=-20
Concentrated Loads (lb)
Vert: 4=-15 (B), 11=-17 (B)

March 12,2025

WARNING - Verify design parameters and READ NOTES ON THIS AND INCLUDED MITEK REFERENCE PAGE MII-7473 rev. 1/2/2023 BEFORE USE.
Design valid for use only with MiTek® connectors. This design is based only upon parameters shown, and is for an individual building component, not a truss system. Before use, the building designer must verify the applicability of design parameters and properly incorporate this design into the overall building design. Bracing indicated is to prevent buckling of individual truss web and/or chord members only. Additional temporary and permanent bracing is always required for stability and to prevent collapse with possible personal injury and property damage. For general guidance regarding the fabrication, storage, delivery, erection and bracing of trusses and truss systems, see **ANSI/TPI1 Quality Criteria and DSB-22** available from Truss Plate Institute (www.tpinst.org) and **BCSI Building Component Safety Information** available from the Structural Building Component Association (www.sbcacomponents.com)

ENGINEERING BY TRENCO A MiTek Affiliate
818 Soundside Road
Edenton, NC 27932

Job	Truss	Truss Type	Qty	Ply	JSJ Builders
4938997	JA5	Jack-Open	4	1	I71926223 Job Reference (optional)

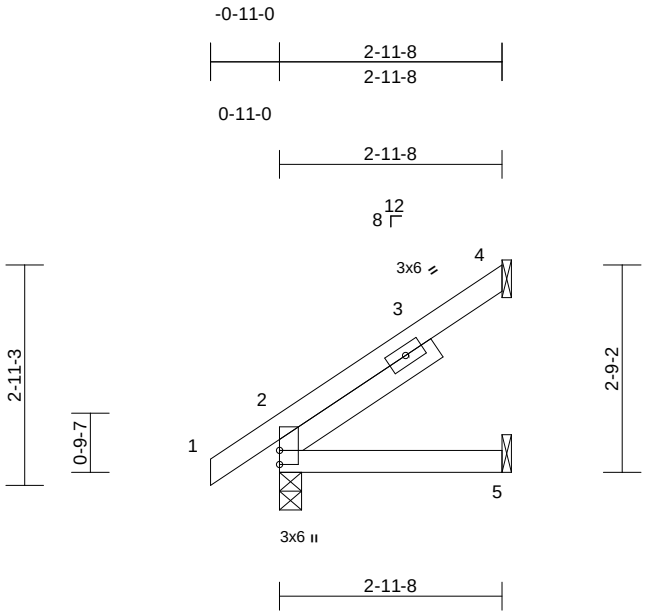

Scale = 1:30.6

Loading	(psf)	Spacing	2-0-0	CSI		DEFL	in	(loc)	l/defl	L/d	PLATES	GRIP
TCLL (roof)	20.0	Plate Grip DOL	1.15	TC	0.15	Vert(LL)	0.01	5-8	>999	240	MT20	244/190
TCDL	10.0	Lumber DOL	1.15	BC	0.09	Vert(CT)	-0.01	5-8	>999	240		
BCLL	0.0*	Rep Stress Incr	YES	WB	0.00	Horz(CT)	0.00	2	n/a	n/a		
BCDL	10.0	Code	IRC2015/TPI2014	Matrix-MP							Weight: 15 lb	FT = 20%

LUMBER
TOP CHORD 2x4 SP No.2
BOT CHORD 2x4 SP No.2
SLIDER Left 2x4 SP No.2 -- 2-6-0

BRACING
TOP CHORD Structural wood sheathing directly applied or 2-11-8 oc purlins.
BOT CHORD Rigid ceiling directly applied or 10-0-0 oc bracing.

REACTIONS (size) 2=0-3-8, 4= Mechanical, 5= Mechanical
Max Horiz 2=128 (LC 12)
Max Uplift 2=-24 (LC 12), 4=-84 (LC 12), 5=-3 (LC 12)
Max Grav 2=180 (LC 1), 4=91 (LC 19), 5=50 (LC 3)

FORCES (lb) - Maximum Compression/Maximum Tension
TOP CHORD 1-2=0/31, 2-4=-169/66
BOT CHORD 2-5=-108/89

NOTES
1) Wind: ASCE 7-10; Vult=130mph (3-second gust) Vasd=103mph; TCDL=6.0psf; BCDL=6.0psf; h=25ft; Cat. II; Exp C; Enclosed; MWFRS (envelope) exterior zone and C-C Exterior (2) -0-11-0 to 2-1-0, Interior (1) 2-1-0 to 2-10-12 zone; cantilever left and right exposed ; end vertical left and right exposed;C-C for members and forces & MWFRS for reactions shown; Lumber DOL=1.60 plate grip DOL=1.60
2) This truss has been designed for a 10.0 psf bottom chord live load nonconcurrent with any other live loads.
3) * This truss has been designed for a live load of 20.0psf on the bottom chord in all areas where a rectangle 3-06-00 tall by 2-00-00 wide will fit between the bottom chord and any other members.
4) Bearings are assumed to be: , Joint 2 SP No.2 .
5) Refer to girder(s) for truss to truss connections.
6) Provide mechanical connection (by others) of truss to bearing plate capable of withstanding 84 lb uplift at joint 4, 24 lb uplift at joint 2 and 3 lb uplift at joint 5.

LOAD CASE(S) Standard

March 12,2025

WARNING - Verify design parameters and READ NOTES ON THIS AND INCLUDED MITEK REFERENCE PAGE MII-7473 rev. 1/2/2023 BEFORE USE.
Design valid for use only with MiTek® connectors. This design is based only upon parameters shown, and is for an individual building component, not a truss system. Before use, the building designer must verify the applicability of design parameters and properly incorporate this design into the overall building design. Bracing indicated is to prevent buckling of individual truss web and/or chord members only. Additional temporary and permanent bracing is always required for stability and to prevent collapse with possible personal injury and property damage. For general guidance regarding the fabrication, storage, delivery, erection and bracing of trusses and truss systems, see **ANSI/TPI1 Quality Criteria and DSB-22** available from Truss Plate Institute (www.tpinst.org) and **BCSI Building Component Safety Information** available from the Structural Building Component Association (www.sbcacomponents.com)

ENGINEERING BY TRENCO A MiTek Affiliate
818 Soundside Road
Edenton, NC 27932

Job	Truss	Truss Type	Qty	Ply	JSJ Builders
4938997	JA6	Jack-Open Girder	1	1	I71926224 Job Reference (optional)

Builders FirstSource (Sumter, SC), Sumter, SC - 29153,

Run: 8.83 S Feb 18 2025 Print: 8.830 S Feb 18 2025 MiTek Industries, Inc. Mon Mar 10 12:56:53 Page: 1
ID:peTYuyoxgDyvofsx4mJ20YzWiHd-RfC?PsB70Hq3NSgPqnL8w3uITXbGKWrCDoi7J4zJC?f

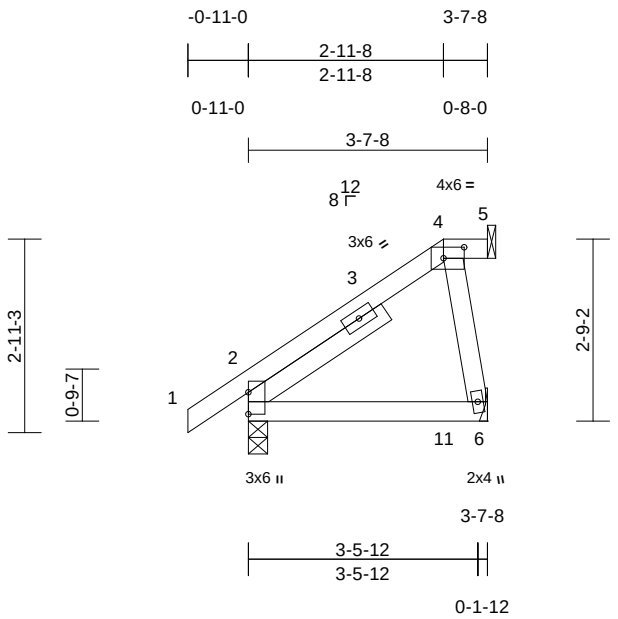

Scale = 1:34.9

Plate Offsets (X, Y): [4:0-3-12,0-2-0]

Loading	(psf)	Spacing	2-0-0	CSI		DEFL	in	(loc)	l/defl	L/d	PLATES	GRIP
TCLL (roof)	20.0	Plate Grip DOL	1.15	TC	0.14	Vert(LL)	-0.01	6-9	>999	360	MT20	244/190
TCDL	10.0	Lumber DOL	1.15	BC	0.13	Vert(CT)	-0.01	6-9	>999	240		
BCLL	0.0*	Rep Stress Incr	NO	WB	0.06	Horz(CT)	0.00	2	n/a	n/a		
BCDL	10.0	Code	IRC2015/TPI2014	Matrix-MP		Wind(LL)	0.01	6-9	>999	240	Weight: 21 lb	FT = 20%

LUMBER

TOP CHORD 2x4 SP No.2
BOT CHORD 2x4 SP No.2
WEBS 2x4 SP No.3
SLIDER Left 2x4 SP No.2 -- 2-6-0

BRACING

TOP CHORD Structural wood sheathing directly applied or 3-7-8 oc purlins, except 2-0-0 oc purlins: 4-5.
BOT CHORD Rigid ceiling directly applied or 10-0-0 oc bracing.

REACTIONS (size) 2=0-3-8, 5= Mechanical, 6= Mechanical
Max Horiz 2=132 (LC 8)
Max Uplift 2=-65 (LC 8), 5=-12 (LC 4), 6=-227 (LC 8)
Max Grav 2=222 (LC 15), 5=18 (LC 1), 6=277 (LC 15)

FORCES (lb) - Maximum Compression/Maximum Tension
TOP CHORD 1-2=0/31, 2-4=-169/85, 4-5=0/0
BOT CHORD 2-6=-112/46
WEBS 4-6=-214/210

NOTES

1) Unbalanced roof live loads have been considered for this design.
2) Wind: ASCE 7-10; Vult=130mph (3-second gust) Vasd=103mph; TCDL=6.0psf; BCDL=6.0psf; h=25ft; Cat. II; Exp C; Enclosed; MWFRS (envelope) exterior zone; cantilever left and right exposed ; end vertical left and right exposed; Lumber DOL=1.60 plate grip DOL=1.60
3) Provide adequate drainage to prevent water ponding.
4) This truss has been designed for a 10.0 psf bottom chord live load nonconcurrent with any other live loads.
5) * This truss has been designed for a live load of 20.0psf on the bottom chord in all areas where a rectangle 3-06-00 tall by 2-00-00 wide will fit between the bottom chord and any other members.
6) Bearings are assumed to be: , Joint 2 SP No.2 .
7) Refer to girder(s) for truss to truss connections.
8) Refer to girder(s) for truss to truss connections.
9) Provide mechanical connection (by others) of truss to bearing plate capable of withstanding 12 lb uplift at joint 5, 65 lb uplift at joint 2 and 227 lb uplift at joint 6.
10) Graphical purlin representation does not depict the size or the orientation of the purlin along the top and/or bottom chord.
11) Hanger(s) or other connection device(s) shall be provided sufficient to support concentrated load(s) 92 lb down and 80 lb up at 2-11-8 on top chord, and 52 lb down and 34 lb up at 2-11-8 on bottom chord. The design/selection of such connection device(s) is the responsibility of others.
12) In the LOAD CASE(S) section, loads applied to the face of the truss are noted as front (F) or back (B).

LOAD CASE(S) Standard

1) Dead + Roof Live (balanced): Lumber Increase=1.15, Plate Increase=1.15
Uniform Loads (lb/ft)
Vert: 1-4=-60, 4-5=-60, 6-7=-20
Concentrated Loads (lb)
Vert: 4=-95 (F), 11=-27 (F)

March 12,2025

WARNING - Verify design parameters and READ NOTES ON THIS AND INCLUDED MITEK REFERENCE PAGE MII-7473 rev. 1/2/2023 BEFORE USE.
Design valid for use only with MiTek® connectors. This design is based only upon parameters shown, and is for an individual building component, not a truss system. Before use, the building designer must verify the applicability of design parameters and properly incorporate this design into the overall building design. Bracing indicated is to prevent buckling of individual truss web and/or chord members only. Additional temporary and permanent bracing is always required for stability and to prevent collapse with possible personal injury and property damage. For general guidance regarding the fabrication, storage, delivery, erection and bracing of trusses and truss systems, see **ANSI/TPI1 Quality Criteria and DSB-22** available from Truss Plate Institute (www.tpinst.org) and **BCSI Building Component Safety Information** available from the Structural Building Component Association (www.sbcacomponents.com)

ENGINEERING BY TRENCO A MiTek Affiliate
818 Soundside Road
Edenton, NC 27932

Job	Truss	Truss Type	Qty	Ply	JSJ Builders
4938997	JA7	Jack-Closed Girder	1	1	I71926225 Job Reference (optional)

Builders FirstSource (Sumter, SC), Sumter, SC - 29153,

Run: 8.83 S Feb 18 2025 Print: 8.830 S Feb 18 2025 MiTek Industries, Inc. Mon Mar 10 12:56:54 Page: 1
ID:z5Mr6HUhY7i?k7yJFYloC9zWiBa-RfC?PsB70Hq3NSgPqnL8w3uITXbGKWrCDoi7J4zJC?f

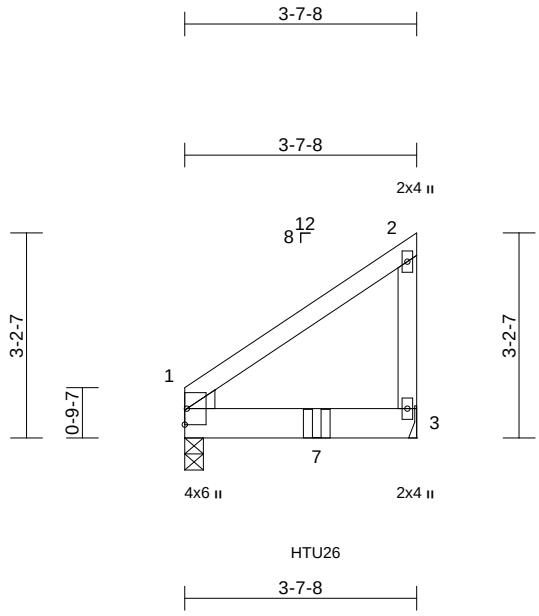

Scale = 1:36

Loading	(psf)	Spacing	2-0-0	CSI		DEFL	in	(loc)	l/defl	L/d	PLATES	GRIP
TCLL (roof)	20.0	Plate Grip DOL	1.15	TC	0.23	Vert(LL)	-0.01	3-6	>999	360	MT20	244/190
TCDL	10.0	Lumber DOL	1.15	BC	0.52	Vert(CT)	-0.03	3-6	>999	240		
BCLL	0.0*	Rep Stress Incr	NO	WB	0.00	Horz(CT)	0.01	1	n/a	n/a		
BCDL	10.0	Code	IRC2015/TPI2014	Matrix-MP		Wind(LL)	0.02	3-6	>999	240	Weight: 19 lb	FT = 20%

LUMBER

TOP CHORD 2x4 SP No.2
BOT CHORD 2x6 SP No.2
WEBS 2x4 SP No.2
WEDGE Left: 2x4 SP No.3

BRACING

TOP CHORD Structural wood sheathing directly applied or 3-7-8 oc purlins, except end verticals.
BOT CHORD Rigid ceiling directly applied or 10-0-0 oc bracing.

REACTIONS (size) 1=0-3-8, 3= Mechanical
Max Horiz 1=121 (LC 8)
Max Uplift 1=-53 (LC 8), 3=-186 (LC 8)
Max Grav 1=346 (LC 1), 3=441 (LC 1)

FORCES (lb) - Maximum Compression/Maximum Tension
TOP CHORD 1-2=-156/53, 2-3=-111/87
BOT CHORD 1-3=-105/72

NOTES

1) Unbalanced roof live loads have been considered for this design.
2) Wind: ASCE 7-10; Vult=130mph (3-second gust) Vasd=103mph; TCDL=6.0psf; BCDL=6.0psf; h=25ft; Cat. II; Exp C; Enclosed; MWFRS (envelope) exterior zone; cantilever left and right exposed ; end vertical left exposed; Lumber DOL=1.60 plate grip DOL=1.60
3) This truss has been designed for a 10.0 psf bottom chord live load nonconcurrent with any other live loads.
4) * This truss has been designed for a live load of 20.0psf on the bottom chord in all areas where a rectangle 3-06-00 tall by 2-00-00 wide will fit between the bottom chord and any other members.
5) Bearings are assumed to be: Joint 1 SP No.2 .
6) Refer to girder(s) for truss to truss connections.
7) Provide mechanical connection (by others) of truss to bearing plate capable of withstanding 186 lb uplift at joint 3 and 53 lb uplift at joint 1.
8) Use Simpson Strong-Tie HTU26 (20-16d Girder, 11-10dx1 1/2 Truss) or equivalent at 2-0-12 from the left end to connect truss(es) to back face of bottom chord.
9) Fill all nail holes where hanger is in contact with lumber.
10) In the LOAD CASE(S) section, loads applied to the face of the truss are noted as front (F) or back (B).

LOAD CASE(S) Standard

1) Dead + Roof Live (balanced): Lumber Increase=1.15, Plate Increase=1.15
Uniform Loads (lb/ft)
Vert: 1-2=-60, 3-4=-20
Concentrated Loads (lb)
Vert: 7=-508 (B)

March 12,2025

WARNING - Verify design parameters and READ NOTES ON THIS AND INCLUDED MITEK REFERENCE PAGE MII-7473 rev. 1/2/2023 BEFORE USE.
Design valid for use only with MiTek® connectors. This design is based only upon parameters shown, and is for an individual building component, not a truss system. Before use, the building designer must verify the applicability of design parameters and properly incorporate this design into the overall building design. Bracing indicated is to prevent buckling of individual truss web and/or chord members only. Additional temporary and permanent bracing is always required for stability and to prevent collapse with possible personal injury and property damage. For general guidance regarding the fabrication, storage, delivery, erection and bracing of trusses and truss systems, see **ANSI/TPI1 Quality Criteria and DSB-22** available from Truss Plate Institute (www.tpinst.org) and **BCSI Building Component Safety Information** available from the Structural Building Component Association (www.sbcacomponents.com)

ENGINEERING BY TRENCO A MiTek Affiliate
818 Soundside Road
Edenton, NC 27932

Job	Truss	Truss Type	Qty	Ply	JSJ Builders
4938997	JA8	Jack-Open	3	1	I71926226 Job Reference (optional)

Builders FirstSource (Sumter, SC), Sumter, SC - 29153, Run: 8.83 S Feb 18 2025 Print: 8.830 S Feb 18 2025 MiTek Industries, Inc. Mon Mar 10 12:56:54 Page: 1
ID:lrAa03RACVdOfoQ7hPmUfjzWiGo-RfC?PsB70Hq3NSgPqnL8w3uITXbGKWrCDoi7J4zJC?f

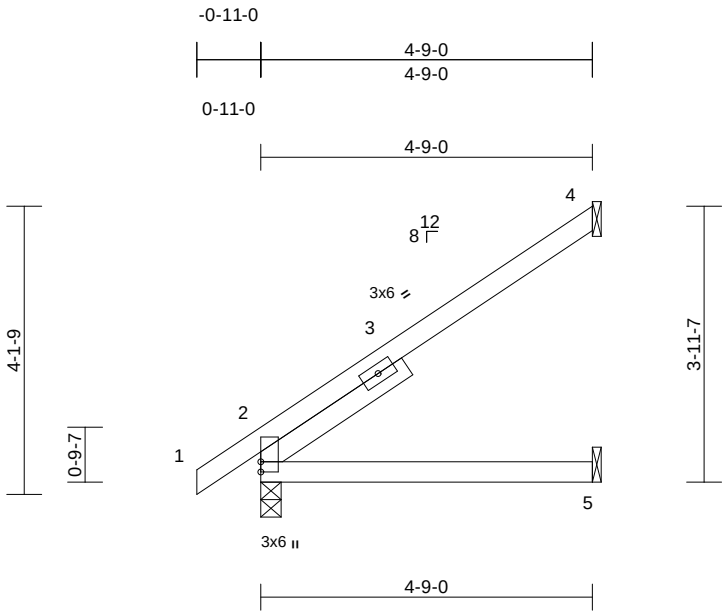

Scale = 1:33

Loading	(psf)	Spacing	2-0-0	CSI		DEFL	in	(loc)	l/defl	L/d	PLATES	GRIP
TCLL (roof)	20.0	Plate Grip DOL	1.15	TC	0.39	Vert(LL)	0.05	5-8	>999	240	MT20	244/190
TCDL	10.0	Lumber DOL	1.15	BC	0.29	Vert(CT)	-0.05	5-8	>999	240		
BCLL	0.0*	Rep Stress Incr	YES	WB	0.00	Horz(CT)	-0.02	4	n/a	n/a		
BCDL	10.0	Code	IRC2015/TPI2014	Matrix-MP							Weight: 21 lb	FT = 20%

LUMBER
TOP CHORD 2x4 SP No.2
BOT CHORD 2x4 SP No.2
SLIDER Left 2x4 SP No.2 -- 2-6-0

BRACING
TOP CHORD Structural wood sheathing directly applied or 4-9-0 oc purlins.
BOT CHORD Rigid ceiling directly applied or 10-0-0 oc bracing.

REACTIONS (size) 2=0-3-8, 4= Mechanical, 5= Mechanical
Max Horiz 2=190 (LC 12)
Max Uplift 2=-27 (LC 12), 4=-129 (LC 12), 5=-5 (LC 12)
Max Grav 2=248 (LC 1), 4=146 (LC 19), 5=85 (LC 3)

FORCES (lb) - Maximum Compression/Maximum Tension
TOP CHORD 1-2=0/31, 2-4=-247/108
BOT CHORD 2-5=-247/214

NOTES
1) Wind: ASCE 7-10; Vult=130mph (3-second gust) Vasd=103mph; TCDL=6.0psf; BCDL=6.0psf; h=25ft; Cat. II; Exp C; Enclosed; MWFRS (envelope) exterior zone and C-C Exterior (2) -0-11-0 to 2-1-0, Interior (1) 2-1-0 to 4-8-4 zone; cantilever left and right exposed ; end vertical left and right exposed;C-C for members and forces & MWFRS for reactions shown; Lumber DOL=1.60 plate grip DOL=1.60
2) This truss has been designed for a 10.0 psf bottom chord live load nonconcurrent with any other live loads.
3) * This truss has been designed for a live load of 20.0psf on the bottom chord in all areas where a rectangle 3-06-00 tall by 2-00-00 wide will fit between the bottom chord and any other members.
4) Bearings are assumed to be: , Joint 2 SP No.2 .
5) Refer to girder(s) for truss to truss connections.
6) Provide mechanical connection (by others) of truss to bearing plate capable of withstanding 129 lb uplift at joint 4, 27 lb uplift at joint 2 and 5 lb uplift at joint 5.

LOAD CASE(S) Standard

NORTH CAROLINA PROFESSIONAL SEAL 036322 ENGINEER ERIC A. GILBERT

March 12,2025

WARNING - Verify design parameters and READ NOTES ON THIS AND INCLUDED MITEK REFERENCE PAGE MII-7473 rev. 1/2/2023 BEFORE USE.
Design valid for use only with MiTek® connectors. This design is based only upon parameters shown, and is for an individual building component, not a truss system. Before use, the building designer must verify the applicability of design parameters and properly incorporate this design into the overall building design. Bracing indicated is to prevent buckling of individual truss web and/or chord members only. Additional temporary and permanent bracing is always required for stability and to prevent collapse with possible personal injury and property damage. For general guidance regarding the fabrication, storage, delivery, erection and bracing of trusses and truss systems, see **ANSI/TPI1 Quality Criteria and DSB-22** available from Truss Plate Institute (www.tpinst.org) and **BCSI Building Component Safety Information** available from the Structural Building Component Association (www.sbcacomponents.com)

ENGINEERING BY TRENCO A MiTek Affiliate
818 Soundside Road
Edenton, NC 27932

Job	Truss	Truss Type	Qty	Ply	JSJ Builders
4938997	JA9	Jack-Open Girder	2	1	I71926227 Job Reference (optional)

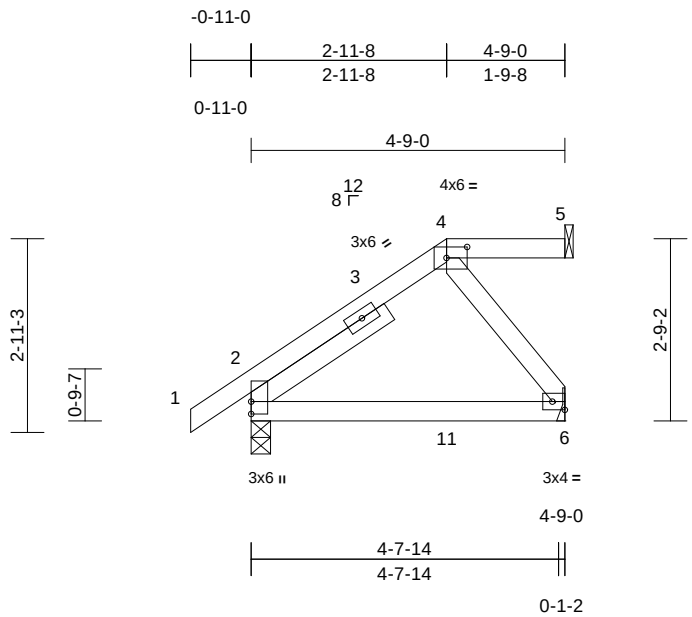

Scale = 1:34.9

Plate Offsets (X, Y): [4:0-3-12,0-2-0], [6:Edge,0-1-8]

Loading	(psf)	Spacing	2-0-0	CSI		DEFL	in	(loc)	l/defl	L/d	PLATES	GRIP
TCLL (roof)	20.0	Plate Grip DOL	1.15	TC	0.16	Vert(LL)	-0.02	6-9	>999	360	MT20	244/190
TCDL	10.0	Lumber DOL	1.15	BC	0.23	Vert(CT)	-0.03	6-9	>999	240		
BCLL	0.0*	Rep Stress Incr	NO	WB	0.04	Horz(CT)	-0.01	2	n/a	n/a		
BCDL	10.0	Code	IRC2015/TPI2014	Matrix-MP		Wind(LL)	0.02	6-9	>999	240	Weight: 25 lb	FT = 20%

LUMBER

TOP CHORD 2x4 SP No.2
BOT CHORD 2x4 SP No.2
WEBS 2x4 SP No.3
SLIDER Left 2x4 SP No.2 -- 2-6-0

BRACING

TOP CHORD Structural wood sheathing directly applied or 4-9-0 oc purlins, except 2-0-0 oc purlins: 4-5.
BOT CHORD Rigid ceiling directly applied or 10-0-0 oc bracing.

REACTIONS (size) 2=0-3-8, 5= Mechanical, 6= Mechanical
Max Horiz 2=132 (LC 8)
Max Uplift 2=-95 (LC 8), 5=-35 (LC 4), 6=-108 (LC 8)
Max Grav 2=265 (LC 15), 5=52 (LC 1), 6=172 (LC 15)

FORCES (lb) - Maximum Compression/Maximum Tension
TOP CHORD 1-2=0/31, 2-4=-295/123, 4-5=0/0
BOT CHORD 2-6=-128/85
WEBS 4-6=-144/130

NOTES

1) Unbalanced roof live loads have been considered for this design.
2) Wind: ASCE 7-10; Vult=130mph (3-second gust) Vasd=103mph; TCDL=6.0psf; BCDL=6.0psf; h=25ft; Cat. II; Exp C; Enclosed; MWFRS (envelope) exterior zone; cantilever left and right exposed ; end vertical left and right exposed; Lumber DOL=1.60 plate grip DOL=1.60
3) Provide adequate drainage to prevent water ponding.
4) This truss has been designed for a 10.0 psf bottom chord live load nonconcurrent with any other live loads.
5) * This truss has been designed for a live load of 20.0psf on the bottom chord in all areas where a rectangle 3-06-00 tall by 2-00-00 wide will fit between the bottom chord and any other members.
6) Bearings are assumed to be: , Joint 2 SP No.2 .
7) Refer to girder(s) for truss to truss connections.
8) Refer to girder(s) for truss to truss connections.
9) Provide mechanical connection (by others) of truss to bearing plate capable of withstanding 35 lb uplift at joint 5, 95 lb uplift at joint 2 and 108 lb uplift at joint 6.
10) Graphical purlin representation does not depict the size or the orientation of the purlin along the top and/or bottom chord.
11) Hanger(s) or other connection device(s) shall be provided sufficient to support concentrated load(s) 97 lb down and 71 lb up at 2-11-8 on top chord, and 43 lb down and 40 lb up at 2-11-8 on bottom chord. The design/selection of such connection device(s) is the responsibility of others.
12) In the LOAD CASE(S) section, loads applied to the face of the truss are noted as front (F) or back (B).

LOAD CASE(S) Standard

1) Dead + Roof Live (balanced): Lumber Increase=1.15, Plate Increase=1.15
Uniform Loads (lb/ft)
Vert: 1-4=-60, 4-5=-60, 6-7=-20
Concentrated Loads (lb)
Vert: 4=-15 (B), 11=-17 (B)

March 12,2025

WARNING - Verify design parameters and READ NOTES ON THIS AND INCLUDED MITEK REFERENCE PAGE MII-7473 rev. 1/2/2023 BEFORE USE.
Design valid for use only with MiTek® connectors. This design is based only upon parameters shown, and is for an individual building component, not a truss system. Before use, the building designer must verify the applicability of design parameters and properly incorporate this design into the overall building design. Bracing indicated is to prevent buckling of individual truss web and/or chord members only. Additional temporary and permanent bracing is always required for stability and to prevent collapse with possible personal injury and property damage. For general guidance regarding the fabrication, storage, delivery, erection and bracing of trusses and truss systems, see **ANSI/TPI1 Quality Criteria and DSB-22** available from Truss Plate Institute (www.tpinst.org) and **BCSI Building Component Safety Information** available from the Structural Building Component Association (www.sbcacomponents.com)

ENGINEERING BY TRENCO A MiTek Affiliate
818 Soundside Road
Edenton, NC 27932

Job	Truss	Truss Type	Qty	Ply	JSJ Builders
4938997	PB01	Piggyback	7	1	Job Reference (optional) I71926228

Builders FirstSource (Sumter, SC), Sumter, SC - 29153,

Run: 8.83 S Feb 18 2025 Print: 8.830 S Feb 18 2025 MiTek Industries, Inc. Mon Mar 10 12:56:54 Page: 1
ID:m2WHE7JfkQYvdEGOfadHoczWiM8-RfC?PsB70Hq3NSgPqnL8w3uITXbGKWrCDoi7J4zJC?f

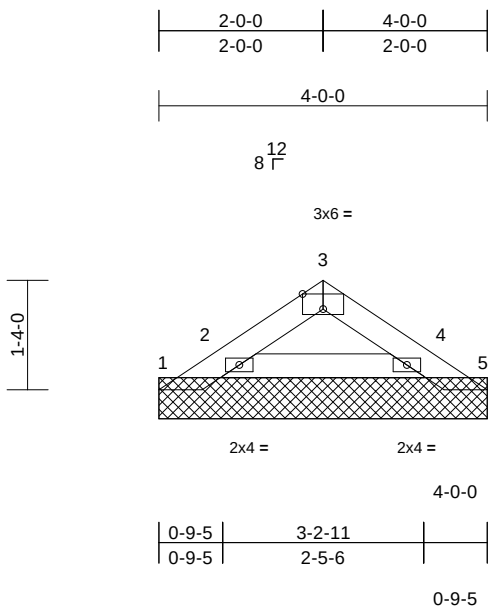

Scale = 1:28.1

Plate Offsets (X, Y): [3:0-3-0,Edge]

Loading	(psf)	Spacing	2-0-0	CSI		DEFL	in	(loc)	l/defl	L/d	PLATES	GRIP
TCLL (roof)	20.0	Plate Grip DOL	1.15	TC	0.04	Vert(LL)	n/a	-	n/a	999	MT20	244/190
TCDL	10.0	Lumber DOL	1.15	BC	0.02	Vert(TL)	n/a	-	n/a	999		
BCLL	0.0*	Rep Stress Incr	YES	WB	0.00	Horiz(TL)	0.00	9	n/a	n/a		
BCDL	10.0	Code	IRC2015/TPI2014	Matrix-MP							Weight: 11 lb	FT = 20%

LUMBER
TOP CHORD 2x4 SP No.2
BOT CHORD 2x4 SP No.2

BRACING
TOP CHORD Structural wood sheathing directly applied or 4-0-0 oc purlins.
BOT CHORD Rigid ceiling directly applied or 10-0-0 oc bracing.

REACTIONS (size) 1=4-0-0, 2=4-0-0, 4=4-0-0, 5=4-0-0
Max Horiz 1=-39 (LC 8)
Max Uplift 1=-29 (LC 10), 2=-48 (LC 12), 4=-37 (LC 13), 5=-14 (LC 3)
Max Grav 1=20 (LC 9), 2=172 (LC 19), 4=149 (LC 1), 5=1 (LC 12)

FORCES (lb) - Maximum Compression/Maximum Tension
TOP CHORD 1-2=-43/61, 2-3=-63/37, 3-4=-63/37, 4-5=0/28
BOT CHORD 2-4=-7/53

NOTES
1) Unbalanced roof live loads have been considered for this design.
2) Wind: ASCE 7-10; Vult=130mph (3-second gust) Vasd=103mph; TCDL=6.0psf; BCDL=6.0psf; h=25ft; Cat. II; Exp C; Enclosed; MWFRS (envelope) exterior zone and C-C Exterior (2) zone; cantilever left and right exposed ; end vertical left and right exposed;C-C for members and forces & MWFRS for reactions shown; Lumber DOL=1.60 plate grip DOL=1.60
3) Truss designed for wind loads in the plane of the truss only. For studs exposed to wind (normal to the face), see Standard Industry Gable End Details as applicable, or consult qualified building designer as per ANSI/TPI 1.
4) Gable requires continuous bottom chord bearing.
5) Gable studs spaced at 4-0-0 oc.
6) This truss has been designed for a 10.0 psf bottom chord live load nonconcurrent with any other live loads.
7) * This truss has been designed for a live load of 20.0psf on the bottom chord in all areas where a rectangle 3-06-00 tall by 2-00-00 wide will fit between the bottom chord and any other members.
8) All bearings are assumed to be SP No.2 .
9) Provide mechanical connection (by others) of truss to bearing plate capable of withstanding 48 lb uplift at joint 2, 37 lb uplift at joint 4, 29 lb uplift at joint 1, 14 lb uplift at joint 5, 48 lb uplift at joint 2 and 37 lb uplift at joint 4.
10) See Standard Industry Piggyback Truss Connection Detail for Connection to base truss as applicable, or consult qualified building designer.

LOAD CASE(S) Standard

March 12,2025

WARNING - Verify design parameters and READ NOTES ON THIS AND INCLUDED MITEK REFERENCE PAGE MII-7473 rev. 1/2/2023 BEFORE USE.
Design valid for use only with MiTek® connectors. This design is based only upon parameters shown, and is for an individual building component, not a truss system. Before use, the building designer must verify the applicability of design parameters and properly incorporate this design into the overall building design. Bracing indicated is to prevent buckling of individual truss web and/or chord members only. Additional temporary and permanent bracing is always required for stability and to prevent collapse with possible personal injury and property damage. For general guidance regarding the fabrication, storage, delivery, erection and bracing of trusses and truss systems, see **ANSI/TPI1 Quality Criteria and DSB-22** available from Truss Plate Institute (www.tpinst.org) and **BCSI Building Component Safety Information** available from the Structural Building Component Association (www.sbcacomponents.com)

ENGINEERING BY TRENCO A MiTek Affiliate
818 Soundside Road
Edenton, NC 27932

Job	Truss	Truss Type	Qty	Ply	JSJ Builders
4938997	V01	Valley	1	1	I71926229 Job Reference (optional)

Builders FirstSource (Sumter, SC), Sumter, SC - 29153,

Run: 8.83 S Feb 18 2025 Print: 8.830 S Feb 18 2025 MiTek Industries, Inc. Mon Mar 10 12:56:54 Page: 1
ID:EzYEtf6cVWXBin2KjDKX9EzWiMO-RfC?PsB70Hq3NSgPqnL8w3uITXbGKWrCDoi7J4zJC?f

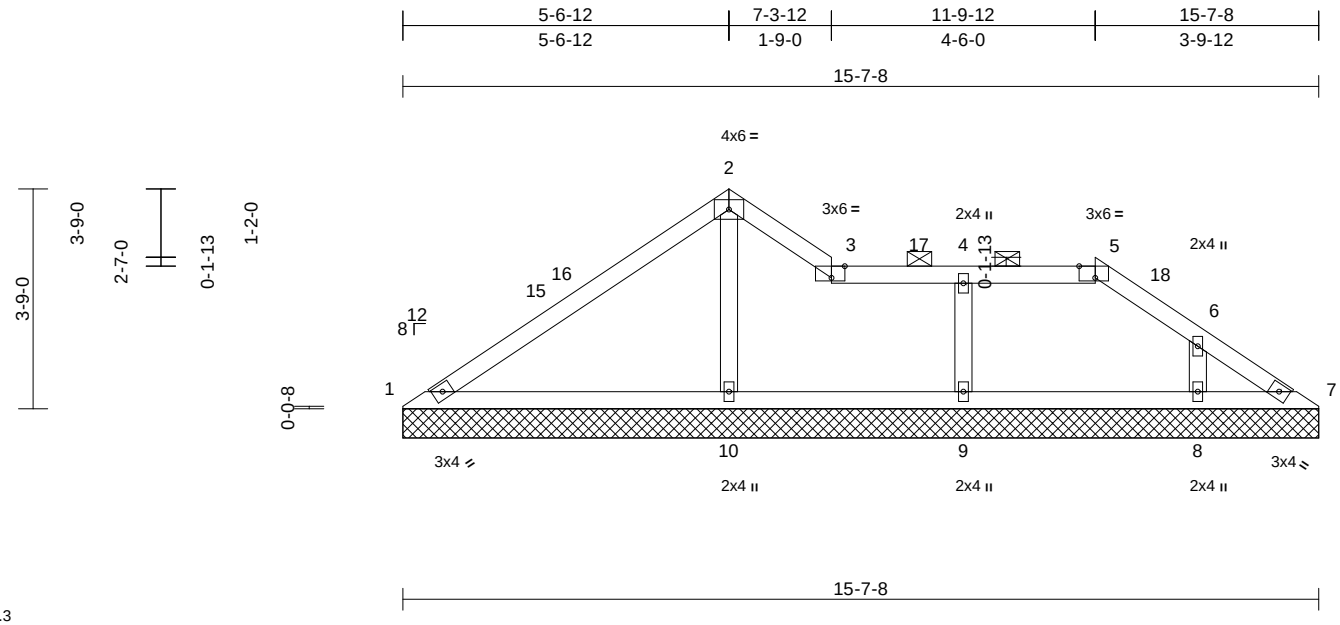

Scale = 1:39.3

Plate Offsets (X, Y): [3:0-2-11,Edge], [5:0-3-5,Edge]

Loading	(psf)	Spacing	2-0-0	CSI		DEFL	in	(loc)	l/defl	L/d	PLATES	GRIP
TCLL (roof)	20.0	Plate Grip DOL	1.15	TC	0.34	Vert(LL)	n/a	-	n/a	999	MT20	244/190
TCDL	10.0	Lumber DOL	1.15	BC	0.38	Vert(TL)	n/a	-	n/a	999		
BCLL	0.0*	Rep Stress Incr	YES	WB	0.08	Horiz(TL)	0.01	10	n/a	n/a		
BCDL	10.0	Code	IRC2015/TPI2014	Matrix-MS							Weight: 57 lb	FT = 20%

LUMBER
TOP CHORD 2x4 SP No.2
BOT CHORD 2x4 SP No.2
OTHERS 2x4 SP No.3

BRACING
TOP CHORD Structural wood sheathing directly applied or 6-0-0 oc purlins, except 2-0-0 oc purlins (10-0-0 max.): 3-5.
BOT CHORD Rigid ceiling directly applied or 6-0-0 oc bracing.

REACTIONS (size) 1=15-7-8, 7=15-7-8, 8=15-7-8, 9=15-7-8, 10=15-7-8
Max Horiz 1=-119 (LC 8)
Max Uplift 1=-34 (LC 12), 8=-138 (LC 13), 9=-144 (LC 13), 10=-147 (LC 12)
Max Grav 1=191 (LC 23), 7=40 (LC 13), 8=296 (LC 1), 9=331 (LC 24), 10=454 (LC 19)

FORCES (lb) - Maximum Compression/Maximum Tension
TOP CHORD 1-2=-253/124, 2-3=-10/86, 3-4=-9/24, 4-5=-9/24, 5-6=-47/22, 6-7=-134/125
BOT CHORD 1-10=-105/265, 9-10=-105/129, 8-9=-105/129, 7-8=-105/129
WEBS 2-10=-294/156, 4-9=-261/195, 6-8=-245/194

NOTES
1) Unbalanced roof live loads have been considered for this design.
2) Wind: ASCE 7-10; Vult=130mph (3-second gust) Vasd=103mph; TCDL=6.0psf; BCDL=6.0psf; h=25ft; Cat. II; Exp C; Enclosed; MWFRS (envelope) exterior zone and C-C Exterior (2) 0-0-12 to 3-0-12, Interior (1) 3-0-12 to 5-7-8, Exterior (2) 5-7-8 to 7-4-8, Interior (1) 7-4-8 to 11-10-8, Exterior (2) 11-10-8 to 14-9-7, Interior (1) 14-9-7 to 15-8-4 zone; cantilever left and right exposed ; end vertical left and right exposed;C-C for members and forces & MWFRS for reactions shown; Lumber DOL=1.60 plate grip DOL=1.60
3) Truss designed for wind loads in the plane of the truss only. For studs exposed to wind (normal to the face), see Standard Industry Gable End Details as applicable, or consult qualified building designer as per ANSI/TPI 1.
4) Provide adequate drainage to prevent water ponding.
5) Gable requires continuous bottom chord bearing.
6) Gable studs spaced at 4-0-0 oc.
7) This truss has been designed for a 10.0 psf bottom chord live load nonconcurrent with any other live loads.
8) * This truss has been designed for a live load of 20.0psf on the bottom chord in all areas where a rectangle 3-06-00 tall by 2-00-00 wide will fit between the bottom chord and any other members.
9) All bearings are assumed to be SP No.2 .
10) Provide mechanical connection (by others) of truss to bearing plate capable of withstanding 34 lb uplift at joint 1, 147 lb uplift at joint 10, 144 lb uplift at joint 9 and 138 lb uplift at joint 8.
11) Graphical purlin representation does not depict the size or the orientation of the purlin along the top and/or bottom chord.

LOAD CASE(S) Standard

March 12,2025

WARNING - Verify design parameters and READ NOTES ON THIS AND INCLUDED MITEK REFERENCE PAGE MII-7473 rev. 1/2/2023 BEFORE USE.
Design valid for use only with MiTek® connectors. This design is based only upon parameters shown, and is for an individual building component, not a truss system. Before use, the building designer must verify the applicability of design parameters and properly incorporate this design into the overall building design. Bracing indicated is to prevent buckling of individual truss web and/or chord members only. Additional temporary and permanent bracing is always required for stability and to prevent collapse with possible personal injury and property damage. For general guidance regarding the fabrication, storage, delivery, erection and bracing of trusses and truss systems, see **ANSI/TPI1 Quality Criteria and DSB-22** available from Truss Plate Institute (www.tpinst.org) and **BCSI Building Component Safety Information** available from the Structural Building Component Association (www.sbcacomponents.com)

ENGINEERING BY TRENCO A MiTek Affiliate
818 Soundside Road
Edenton, NC 27932

Job	Truss	Truss Type	Qty	Ply	JSJ Builders
4938997	V02	Valley	1	1	I71926230 Job Reference (optional)

Builders FirstSource (Sumter, SC), Sumter, SC - 29153,

Run: 8.83 S Feb 18 2025 Print: 8.830 S Feb 18 2025 MiTek Industries, Inc. Mon Mar 10 12:56:55 Page: 1
ID:iuaBWBwaHbWSnKqFns2nVszWiMe-RfC?PsB70Hq3NSgPqnL8w3uITXbGKWrCDoi7J4zJC?f

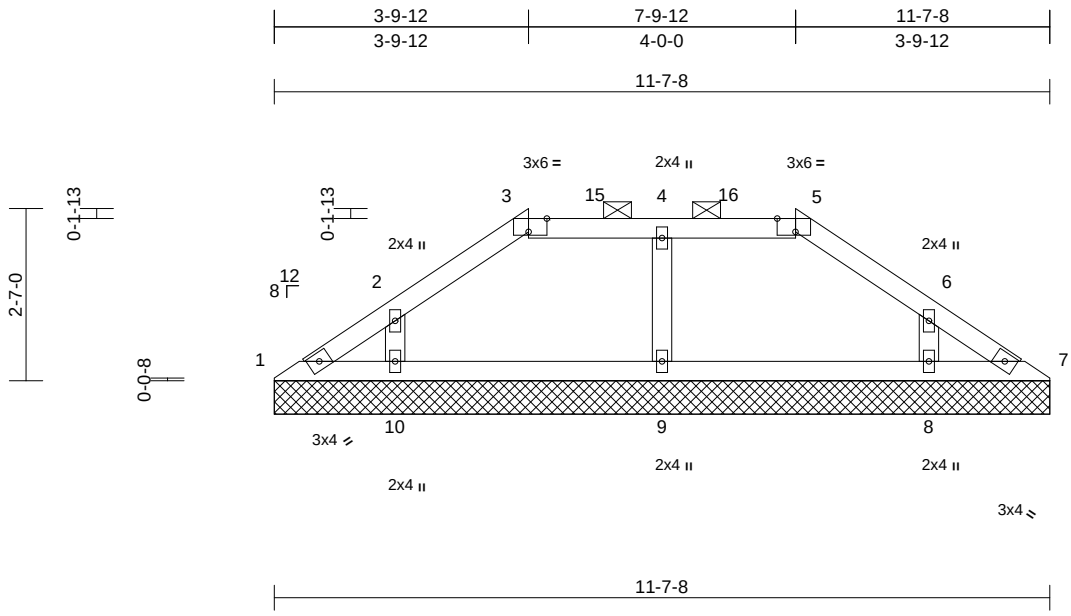

Scale = 1:34.5

Plate Offsets (X, Y): [3:0-3-5,Edge], [5:0-3-5,Edge]

Loading	(psf)	Spacing	2-0-0	CSI		DEFL	in	(loc)	l/defl	L/d	PLATES	GRIP
TCLL (roof)	20.0	Plate Grip DOL	1.15	TC	0.09	Vert(LL)	n/a	-	n/a	999	MT20	244/190
TCDL	10.0	Lumber DOL	1.15	BC	0.13	Vert(TL)	n/a	-	n/a	999		
BCLL	0.0*	Rep Stress Incr	YES	WB	0.05	Horiz(TL)	0.00	7	n/a	n/a		
BCDL	10.0	Code	IRC2015/TPI2014	Matrix-MS							Weight: 40 lb	FT = 20%

LUMBER
TOP CHORD 2x4 SP No.2
BOT CHORD 2x4 SP No.2
OTHERS 2x4 SP No.3

BRACING
TOP CHORD Structural wood sheathing directly applied or 6-0-0 oc purlins, except 2-0-0 oc purlins (6-0-0 max.): 3-5.
BOT CHORD Rigid ceiling directly applied or 10-0-0 oc bracing.

REACTIONS (size) 1=11-7-8, 7=11-7-8, 8=11-7-8, 9=11-7-8, 10=11-7-8
Max Horiz 1=78 (LC 9)
Max Uplift 1=-32 (LC 13), 7=-23 (LC 12), 8=-108 (LC 13), 9=-55 (LC 9), 10=-114 (LC 12)
Max Grav 1=104 (LC 1), 7=104 (LC 1), 8=256 (LC 20), 9=251 (LC 1), 10=264 (LC 19)

FORCES (lb) - Maximum Compression/Maximum Tension
TOP CHORD 1-2=-142/88, 2-3=-188/146, 3-4=-140/144, 4-5=-140/144, 5-6=-188/146, 6-7=-142/74
BOT CHORD 1-10=-55/124, 9-10=-55/124, 8-9=-55/124, 7-8=-55/124
WEBS 4-9=-169/165, 2-10=-184/156, 6-8=-178/150

NOTES
1) Unbalanced roof live loads have been considered for this design.
2) Wind: ASCE 7-10; Vult=130mph (3-second gust) Vasd=103mph; TCDL=6.0psf; BCDL=6.0psf; h=25ft; Cat. II; Exp C; Enclosed; MWFRS (envelope) exterior zone and C-C Corner (3) 0-0-12 to 3-0-12, Exterior (2) 3-0-12 to 3-10-8, Corner (3) 3-10-8 to 6-10-8, Exterior (2) 6-10-8 to 7-10-8, Corner (3) 7-10-8 to 10-9-7, Exterior (2) 10-9-7 to 11-8-4 zone; cantilever left and right exposed ; end vertical left and right exposed;C-C for members and forces & MWFRS for reactions shown; Lumber DOL=1.60 plate grip DOL=1.60
3) Truss designed for wind loads in the plane of the truss only. For studs exposed to wind (normal to the face), see Standard Industry Gable End Details as applicable, or consult qualified building designer as per ANSI/TPI 1.
4) Provide adequate drainage to prevent water ponding.
5) Gable requires continuous bottom chord bearing.
6) Gable studs spaced at 4-0-0 oc.
7) This truss has been designed for a 10.0 psf bottom chord live load nonconcurrent with any other live loads.
8) * This truss has been designed for a live load of 20.0psf on the bottom chord in all areas where a rectangle 3-06-00 tall by 2-00-00 wide will fit between the bottom chord and any other members.
9) All bearings are assumed to be SP No.2 .
10) Provide mechanical connection (by others) of truss to bearing plate capable of withstanding 32 lb uplift at joint 1, 23 lb uplift at joint 7, 55 lb uplift at joint 9, 114 lb uplift at joint 10 and 108 lb uplift at joint 8.
11) Graphical purlin representation does not depict the size or the orientation of the purlin along the top and/or bottom chord.

LOAD CASE(S) Standard

March 12,2025

WARNING - Verify design parameters and READ NOTES ON THIS AND INCLUDED MITEK REFERENCE PAGE MII-7473 rev. 1/2/2023 BEFORE USE.
Design valid for use only with MiTek® connectors. This design is based only upon parameters shown, and is for an individual building component, not a truss system. Before use, the building designer must verify the applicability of design parameters and properly incorporate this design into the overall building design. Bracing indicated is to prevent buckling of individual truss web and/or chord members only. Additional temporary and permanent bracing is always required for stability and to prevent collapse with possible personal injury and property damage. For general guidance regarding the fabrication, storage, delivery, erection and bracing of trusses and truss systems, see **ANSI/TPI1 Quality Criteria and DSB-22** available from Truss Plate Institute (www.tpinst.org) and **BCSI Building Component Safety Information** available from the Structural Building Component Association (www.sbcacomponents.com)

ENGINEERING BY TRENCO A MiTek Affiliate
818 Soundside Road
Edenton, NC 27932

Job	Truss	Truss Type	Qty	Ply	JSJ Builders
4938997	V03	Valley	1	1	Job Reference (optional) I71926231

Builders FirstSource (Sumter, SC), Sumter, SC - 29153,

Run: 8.83 S Feb 18 2025 Print: 8.830 S Feb 18 2025 MiTek Industries, Inc. Mon Mar 10 12:56:55 Page: 1
ID:Axr86WmMbiruhsFNqOPtE0zWiTI-RfC?PsB70Hq3NSgPqnL8w3uITXbGKWrCDoi7J4zJC?f

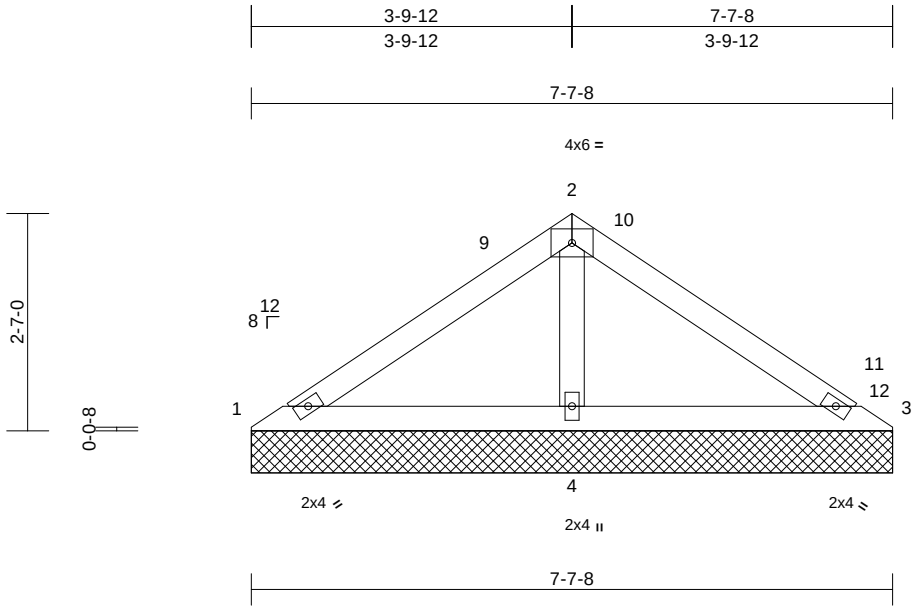

Scale = 1:27.4

Loading	(psf)	Spacing	2-0-0	CSI		DEFL	in	(loc)	l/defl	L/d	PLATES	GRIP
TCLL (roof)	20.0	Plate Grip DOL	1.15	TC	0.15	Vert(LL)	n/a	-	n/a	999	MT20	244/190
TCDL	10.0	Lumber DOL	1.15	BC	0.16	Vert(TL)	n/a	-	n/a	999		
BCLL	0.0*	Rep Stress Incr	YES	WB	0.08	Horiz(TL)	0.00	3	n/a	n/a		
BCDL	10.0	Code	IRC2015/TPI2014	Matrix-MS							Weight: 26 lb	FT = 20%

LUMBER
TOP CHORD 2x4 SP No.2
BOT CHORD 2x4 SP No.2
OTHERS 2x4 SP No.3

BRACING
TOP CHORD Structural wood sheathing directly applied or 7-7-8 oc purlins.
BOT CHORD Rigid ceiling directly applied or 6-0-0 oc bracing.

REACTIONS (size) 1=7-7-8, 3=7-7-8, 4=7-7-8
Max Horiz 1=80 (LC 9)
Max Uplift 1=-8 (LC 12), 3=-12 (LC 8), 4=-137 (LC 12)
Max Grav 1=79 (LC 23), 3=56 (LC 24), 4=497 (LC 1)

FORCES (lb) - Maximum Compression/Maximum Tension
TOP CHORD 1-2=-76/202, 2-3=-73/198
BOT CHORD 1-4=-182/116, 3-4=-182/116
WEBS 2-4=-388/197

NOTES
1) Unbalanced roof live loads have been considered for this design.
2) Wind: ASCE 7-10; Vult=130mph (3-second gust) Vasd=103mph; TCDL=6.0psf; BCDL=6.0psf; h=25ft; Cat. II; Exp C; Enclosed; MWFRS (envelope) exterior zone and C-C Exterior (2) 0-0-12 to 3-0-12, Interior (1) 3-0-12 to 3-10-8, Exterior (2) 3-10-8 to 6-9-7, Interior (1) 6-9-7 to 7-3-4 zone; cantilever left and right exposed ; end vertical left and right exposed;C-C for members and forces & MWFRS for reactions shown; Lumber DOL=1.60 plate grip DOL=1.60
3) Truss designed for wind loads in the plane of the truss only. For studs exposed to wind (normal to the face), see Standard Industry Gable End Details as applicable, or consult qualified building designer as per ANSI/TPI 1.
4) Gable requires continuous bottom chord bearing.
5) Gable studs spaced at 4-0-0 oc.
6) This truss has been designed for a 10.0 psf bottom chord live load nonconcurrent with any other live loads.
7) * This truss has been designed for a live load of 20.0psf on the bottom chord in all areas where a rectangle 3-06-00 tall by 2-00-00 wide will fit between the bottom chord and any other members.
8) All bearings are assumed to be SP No.2 .
9) Provide mechanical connection (by others) of truss to bearing plate capable of withstanding 8 lb uplift at joint 1, 12 lb uplift at joint 3 and 137 lb uplift at joint 4.

LOAD CASE(S) Standard

March 12,2025

WARNING - Verify design parameters and READ NOTES ON THIS AND INCLUDED MITEK REFERENCE PAGE MII-7473 rev. 1/2/2023 BEFORE USE.
Design valid for use only with MiTek® connectors. This design is based only upon parameters shown, and is for an individual building component, not a truss system. Before use, the building designer must verify the applicability of design parameters and properly incorporate this design into the overall building design. Bracing indicated is to prevent buckling of individual truss web and/or chord members only. Additional temporary and permanent bracing is always required for stability and to prevent collapse with possible personal injury and property damage. For general guidance regarding the fabrication, storage, delivery, erection and bracing of trusses and truss systems, see **ANSI/TPI1 Quality Criteria and DSB-22** available from Truss Plate Institute (www.tpinst.org) and **BCSI Building Component Safety Information** available from the Structural Building Component Association (www.sbcacomponents.com)

ENGINEERING BY TRENCO A MiTek Affiliate
818 Soundside Road
Edenton, NC 27932

Job	Truss	Truss Type	Qty	Ply	JSJ Builders
4938997	V04	Valley	1	1	Job Reference (optional) I71926232

Builders FirstSource (Sumter, SC), Sumter, SC - 29153,

Run: 8.83 S Feb 18 2025 Print: 8.830 S Feb 18 2025 MiTek Industries, Inc. Mon Mar 10 12:56:55 Page: 1
ID:72RTzOay75y1NYcURkeM7szWiTX-RfC?PsB70Hq3NSgPqnL8w3uITXbGKWrCDoi7J4zJC?f

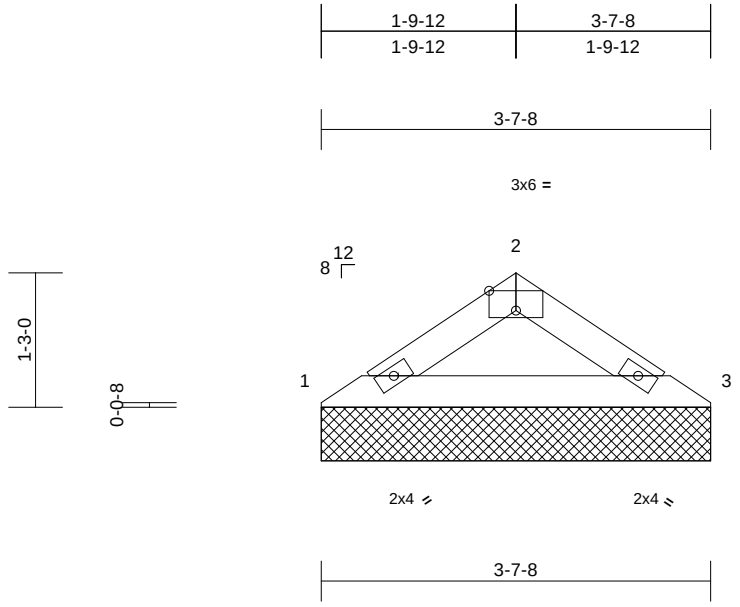

Scale = 1:21.4

Plate Offsets (X, Y): [2:0-3-0,Edge]

Loading	(psf)	Spacing	2-0-0	CSI		DEFL	in	(loc)	l/defl	L/d	PLATES	GRIP
TCLL (roof)	20.0	Plate Grip DOL	1.15	TC	0.10	Vert(LL)	n/a	-	n/a	999	MT20	244/190
TCDL	10.0	Lumber DOL	1.15	BC	0.08	Vert(TL)	n/a	-	n/a	999		
BCLL	0.0*	Rep Stress Incr	YES	WB	0.00	Horiz(TL)	0.00	3	n/a	n/a		
BCDL	10.0	Code	IRC2015/TPI2014	Matrix-MP							Weight: 10 lb	FT = 20%

LUMBER
TOP CHORD 2x4 SP No.2
BOT CHORD 2x4 SP No.2

BRACING
TOP CHORD Structural wood sheathing directly applied or 3-7-8 oc purlins.
BOT CHORD Rigid ceiling directly applied or 10-0-0 oc bracing.

REACTIONS (size) 1=3-7-8, 3=3-7-8
Max Horiz 1=-36 (LC 8)
Max Uplift 1=-37 (LC 12), 3=-37 (LC 13)
Max Grav 1=145 (LC 1), 3=145 (LC 1)

FORCES (lb) - Maximum Compression/Maximum Tension
TOP CHORD 1-2=-215/85, 2-3=-215/85
BOT CHORD 1-3=-57/176

NOTES
1) Unbalanced roof live loads have been considered for this design.
2) Wind: ASCE 7-10; Vult=130mph (3-second gust) Vasd=103mph; TCDL=6.0psf; BCDL=6.0psf; h=25ft; Cat. II; Exp C; Enclosed; MWFRS (envelope) exterior zone and C-C Exterior (2) zone; cantilever left and right exposed ; end vertical left and right exposed;C-C for members and forces & MWFRS for reactions shown; Lumber DOL=1.60 plate grip DOL=1.60
3) Truss designed for wind loads in the plane of the truss only. For studs exposed to wind (normal to the face), see Standard Industry Gable End Details as applicable, or consult qualified building designer as per ANSI/TPI 1.
4) Gable requires continuous bottom chord bearing.
5) Gable studs spaced at 4-0-0 oc.
6) This truss has been designed for a 10.0 psf bottom chord live load nonconcurrent with any other live loads.
7) * This truss has been designed for a live load of 20.0psf on the bottom chord in all areas where a rectangle 3-06-00 tall by 2-00-00 wide will fit between the bottom chord and any other members.
8) All bearings are assumed to be SP No.2 .
9) Provide mechanical connection (by others) of truss to bearing plate capable of withstanding 37 lb uplift at joint 1 and 37 lb uplift at joint 3.

LOAD CASE(S) Standard

March 12,2025

WARNING - Verify design parameters and READ NOTES ON THIS AND INCLUDED MITEK REFERENCE PAGE MII-7473 rev. 1/2/2023 BEFORE USE.
Design valid for use only with MiTek® connectors. This design is based only upon parameters shown, and is for an individual building component, not a truss system. Before use, the building designer must verify the applicability of design parameters and properly incorporate this design into the overall building design. Bracing indicated is to prevent buckling of individual truss web and/or chord members only. Additional temporary and permanent bracing is always required for stability and to prevent collapse with possible personal injury and property damage. For general guidance regarding the fabrication, storage, delivery, erection and bracing of trusses and truss systems, see **ANSI/TPI1 Quality Criteria and DSB-22** available from Truss Plate Institute (www.tpinst.org) and **BCSI Building Component Safety Information** available from the Structural Building Component Association (www.sbcacomponents.com)

ENGINEERING BY TRENCO A MiTek Affiliate
818 Soundside Road
Edenton, NC 27932

Job	Truss	Truss Type	Qty	Ply	JSJ Builders
4938997	V05	Valley	1	1	I71926233 Job Reference (optional)

Builders FirstSource (Sumter, SC), Sumter, SC - 29153, Run: 8.83 S Feb 18 2025 Print: 8.830 S Feb 18 2025 MiTek Industries, Inc. Mon Mar 10 12:56:55 Page: 1
ID:6nv2OaNI8tpRrxpDygqNxGzWiTo-RfC?PsB70Hq3NSgPqnL8w3uITXbGKWrCDoi7J4zJC?f

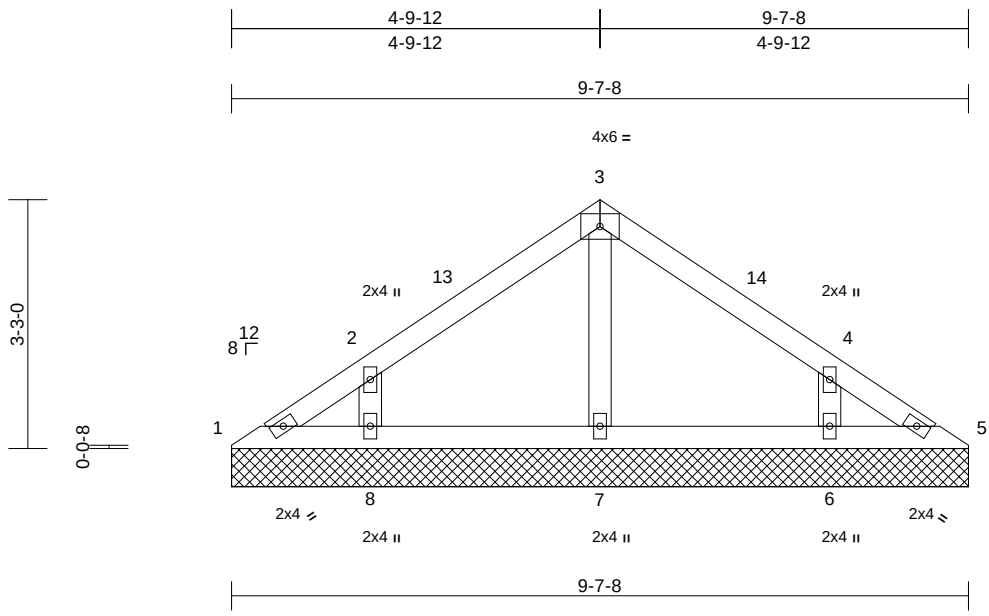

Scale = 1:30.1

Loading	(psf)	Spacing	2-0-0	CSI		DEFL	in	(loc)	l/defl	L/d	PLATES	GRIP
TCLL (roof)	20.0	Plate Grip DOL	1.15	TC	0.10	Vert(LL)	n/a	-	n/a	999	MT20	244/190
TCDL	10.0	Lumber DOL	1.15	BC	0.07	Vert(TL)	n/a	-	n/a	999		
BCLL	0.0*	Rep Stress Incr	YES	WB	0.06	Horiz(TL)	0.00	5	n/a	n/a		
BCDL	10.0	Code	IRC2015/TPI2014	Matrix-MS							Weight: 36 lb	FT = 20%

LUMBER
TOP CHORD 2x4 SP No.2
BOT CHORD 2x4 SP No.2
OTHERS 2x4 SP No.3

BRACING
TOP CHORD Structural wood sheathing directly applied or 6-0-0 oc purlins.
BOT CHORD Rigid ceiling directly applied or 10-0-0 oc bracing.

REACTIONS (size) 1=9-7-8, 5=9-7-8, 6=9-7-8, 7=9-7-8, 8=9-7-8
Max Horiz 1=-103 (LC 8)
Max Uplift 1=-22 (LC 8), 5=-3 (LC 12), 6=-142 (LC 13), 8=-145 (LC 12)
Max Grav 1=71 (LC 20), 5=53 (LC 1), 6=259 (LC 20), 7=203 (LC 1), 8=262 (LC 19)

FORCES (lb) - Maximum Compression/Maximum Tension
TOP CHORD 1-2=-90/88, 2-3=-96/96, 3-4=-96/92, 4-5=-61/48
BOT CHORD 1-8=-33/66, 7-8=-30/59, 6-7=-30/59, 5-6=-30/59
WEBS 3-7=-140/27, 2-8=-238/187, 4-6=-238/185

NOTES
1) Unbalanced roof live loads have been considered for this design.
2) Wind: ASCE 7-10; Vult=130mph (3-second gust) Vasd=103mph; TCDL=6.0psf; BCDL=6.0psf; h=25ft; Cat. II; Exp C; Enclosed; MWFRS (envelope) exterior zone and C-C Exterior (2) 0-0-12 to 3-0-12, Interior (1) 3-0-12 to 4-10-8, Exterior (2) 4-10-8 to 7-10-8, Interior (1) 7-10-8 to 9-8-4 zone; cantilever left and right exposed ; end vertical left and right exposed;C-C for members and forces & MWFRS for reactions shown; Lumber DOL=1.60 plate grip DOL=1.60
3) Truss designed for wind loads in the plane of the truss only. For studs exposed to wind (normal to the face), see Standard Industry Gable End Details as applicable, or consult qualified building designer as per ANSI/TPI 1.
4) Gable requires continuous bottom chord bearing.
5) Gable studs spaced at 3-0-0 oc.
6) This truss has been designed for a 10.0 psf bottom chord live load nonconcurrent with any other live loads.
7) * This truss has been designed for a live load of 20.0psf on the bottom chord in all areas where a rectangle 3-06-00 tall by 2-00-00 wide will fit between the bottom chord and any other members.
8) All bearings are assumed to be SP No.2 .
9) Provide mechanical connection (by others) of truss to bearing plate capable of withstanding 22 lb uplift at joint 1, 3 lb uplift at joint 5, 145 lb uplift at joint 8 and 142 lb uplift at joint 6.

LOAD CASE(S) Standard

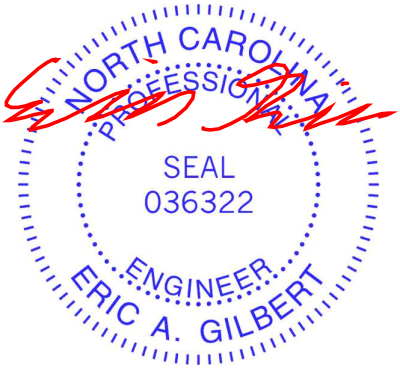

March 12,2025

WARNING - Verify design parameters and READ NOTES ON THIS AND INCLUDED MITEK REFERENCE PAGE MII-7473 rev. 1/2/2023 BEFORE USE.
Design valid for use only with MiTek® connectors. This design is based only upon parameters shown, and is for an individual building component, not a truss system. Before use, the building designer must verify the applicability of design parameters and properly incorporate this design into the overall building design. Bracing indicated is to prevent buckling of individual truss web and/or chord members only. Additional temporary and permanent bracing is always required for stability and to prevent collapse with possible personal injury and property damage. For general guidance regarding the fabrication, storage, delivery, erection and bracing of trusses and truss systems, see **ANSI/TPI1 Quality Criteria and DSB-22** available from Truss Plate Institute (www.tpinst.org) and **BCSI Building Component Safety Information** available from the Structural Building Component Association (www.sbcacomponents.com)

ENGINEERING BY TRENCO A MiTek Affiliate
818 Soundside Road
Edenton, NC 27932

Job	Truss	Truss Type	Qty	Ply	JSJ Builders
4938997	V06	Valley	1	1	I71926234 Job Reference (optional)

Builders FirstSource (Sumter, SC), Sumter, SC - 29153,

Run: 8.83 S Feb 18 2025 Print: 8.830 S Feb 18 2025 MiTek Industries, Inc. Mon Mar 10 12:56:55 Page: 1
ID:ubwVe7gzFZyuLnD1vQnESYzWiTP-RfC?PsB70Hq3NSgPqnL8w3uITXbGKWrCDoi7J4zJC?f

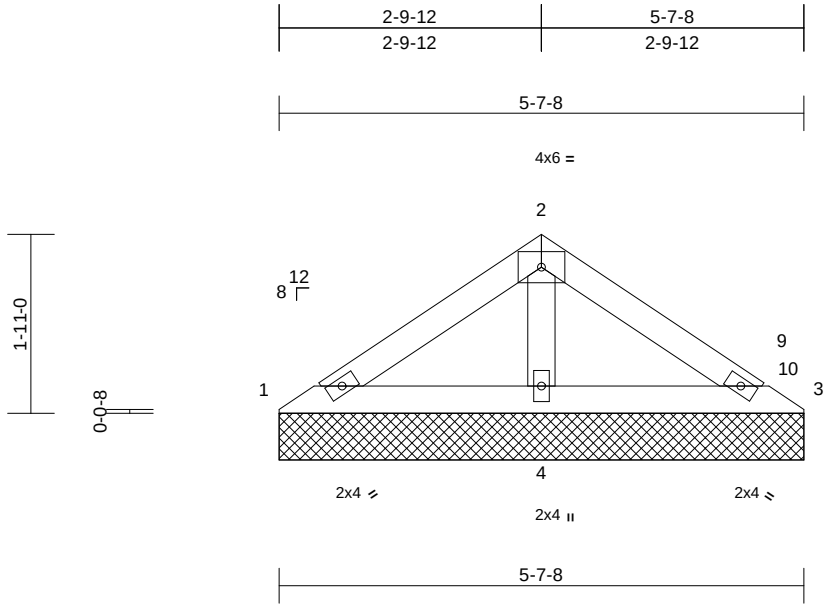

Scale = 1:24.7

Loading	(psf)	Spacing	2-0-0	CSI		DEFL	in	(loc)	l/defl	L/d	PLATES	GRIP
TCLL (roof)	20.0	Plate Grip DOL	1.15	TC	0.08	Vert(LL)	n/a	-	n/a	999	MT20	244/190
TCDL	10.0	Lumber DOL	1.15	BC	0.10	Vert(TL)	n/a	-	n/a	999		
BCLL	0.0*	Rep Stress Incr	YES	WB	0.04	Horiz(TL)	0.00	3	n/a	n/a		
BCDL	10.0	Code	IRC2015/TPI2014	Matrix-MP							Weight: 19 lb	FT = 20%

LUMBER
TOP CHORD 2x4 SP No.2
BOT CHORD 2x4 SP No.2
OTHERS 2x4 SP No.3

BRACING
TOP CHORD Structural wood sheathing directly applied or 5-7-8 oc purlins.
BOT CHORD Rigid ceiling directly applied or 6-0-0 oc bracing.

REACTIONS (size) 1=5-7-8, 3=5-7-8, 4=5-7-8
Max Horiz 1=57 (LC 9)
Max Uplift 1=-11 (LC 12), 3=-6 (LC 8), 4=-91 (LC 12)
Max Grav 1=68 (LC 23), 3=46 (LC 24), 4=340 (LC 1)

FORCES (lb) - Maximum Compression/Maximum Tension
TOP CHORD 1-2=-65/124, 2-3=-51/118
BOT CHORD 1-4=-123/84, 3-4=-123/84
WEBS 2-4=-231/119

NOTES
1) Unbalanced roof live loads have been considered for this design.
2) Wind: ASCE 7-10; Vult=130mph (3-second gust) Vasd=103mph; TCDL=6.0psf; BCDL=6.0psf; h=25ft; Cat. II; Exp C; Enclosed; MWFRS (envelope) exterior zone and C-C Exterior (2) zone; cantilever left and right exposed ; end vertical left and right exposed;C-C for members and forces & MWFRS for reactions shown; Lumber DOL=1.60 plate grip DOL=1.60
3) Truss designed for wind loads in the plane of the truss only. For studs exposed to wind (normal to the face), see Standard Industry Gable End Details as applicable, or consult qualified building designer as per ANSI/TPI 1.
4) Gable requires continuous bottom chord bearing.
5) Gable studs spaced at 4-0-0 oc.
6) This truss has been designed for a 10.0 psf bottom chord live load nonconcurrent with any other live loads.
7) * This truss has been designed for a live load of 20.0psf on the bottom chord in all areas where a rectangle 3-06-00 tall by 2-00-00 wide will fit between the bottom chord and any other members.
8) All bearings are assumed to be SP No.2 .
9) Provide mechanical connection (by others) of truss to bearing plate capable of withstanding 11 lb uplift at joint 1, 6 lb uplift at joint 3 and 91 lb uplift at joint 4.

LOAD CASE(S) Standard

March 12,2025

WARNING - Verify design parameters and READ NOTES ON THIS AND INCLUDED MITEK REFERENCE PAGE MII-7473 rev. 1/2/2023 BEFORE USE.
Design valid for use only with MiTek® connectors. This design is based only upon parameters shown, and is for an individual building component, not a truss system. Before use, the building designer must verify the applicability of design parameters and properly incorporate this design into the overall building design. Bracing indicated is to prevent buckling of individual truss web and/or chord members only. Additional temporary and permanent bracing is always required for stability and to prevent collapse with possible personal injury and property damage. For general guidance regarding the fabrication, storage, delivery, erection and bracing of trusses and truss systems, see **ANSI/TPI1 Quality Criteria and DSB-22** available from Truss Plate Institute (www.tpinst.org) and **BCSI Building Component Safety Information** available from the Structural Building Component Association (www.sbcacomponents.com)

ENGINEERING BY TRENCO A MiTek Affiliate
818 Soundside Road
Edenton, NC 27932

Job	Truss	Truss Type	Qty	Ply	JSJ Builders
4938997	V07	Valley	1	1	I71926235 Job Reference (optional)

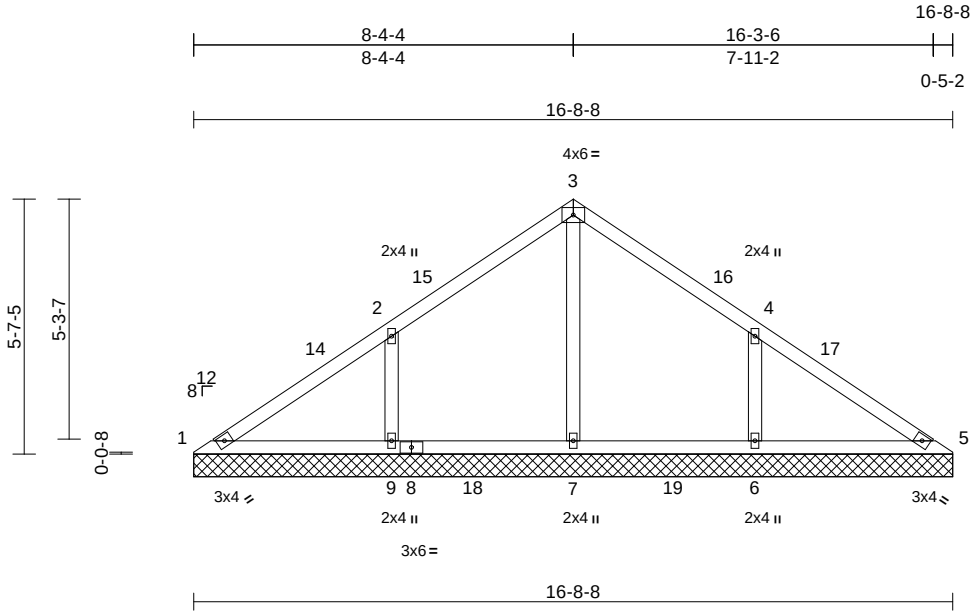

Scale = 1:50.7

Loading	(psf)	Spacing	2-0-0	CSI		DEFL	in	(loc)	l/defl	L/d	PLATES	GRIP
TCLL (roof)	20.0	Plate Grip DOL	1.15	TC	0.26	Vert(LL)	n/a	-	n/a	999	MT20	244/190
TCDL	10.0	Lumber DOL	1.15	BC	0.15	Vert(TL)	n/a	-	n/a	999		
BCLL	0.0*	Rep Stress Incr	YES	WB	0.17	Horiz(TL)	0.00	5	n/a	n/a		
BCDL	10.0	Code	IRC2015/TPI2014	Matrix-MS							Weight: 68 lb	FT = 20%

LUMBER
TOP CHORD 2x4 SP No.2
BOT CHORD 2x4 SP No.2
OTHERS 2x4 SP No.3

BRACING
TOP CHORD Structural wood sheathing directly applied or 10-0-0 oc purlins.
BOT CHORD Rigid ceiling directly applied or 6-0-0 oc bracing.

REACTIONS (size) 1=16-8-8, 5=16-8-8, 6=16-8-8, 7=16-8-8, 9=16-8-8
Max Horiz 1=-181 (LC 8)
Max Uplift 1=-21 (LC 13), 6=-248 (LC 13), 9=-251 (LC 12)
Max Grav 1=113 (LC 20), 5=103 (LC 24), 6=455 (LC 20), 7=459 (LC 19), 9=458 (LC 19)

FORCES (lb) - Maximum Compression/Maximum Tension
TOP CHORD 1-2=-149/232, 2-3=-34/175, 3-4=-28/154, 4-5=-120/177
BOT CHORD 1-9=-172/156, 7-9=-172/147, 6-7=-172/147, 5-6=-172/147
WEBS 3-7=-303/41, 2-9=-356/277, 4-6=-356/276

NOTES
1) Unbalanced roof live loads have been considered for this design.
2) Wind: ASCE 7-10; Vult=130mph (3-second gust) Vasd=103mph; TCDL=6.0psf; BCDL=6.0psf; h=25ft; Cat. II; Exp C; Enclosed; MWFRS (envelope) exterior zone and C-C Exterior (2) 0-0-12 to 3-0-12, Interior (1) 3-0-12 to 8-5-0, Exterior (2) 8-5-0 to 11-5-0, Interior (1) 11-5-0 to 16-9-4 zone; cantilever left and right exposed ; end vertical left and right exposed;C-C for members and forces & MWFRS for reactions shown; Lumber DOL=1.60 plate grip DOL=1.60
3) Truss designed for wind loads in the plane of the truss only. For studs exposed to wind (normal to the face), see Standard Industry Gable End Details as applicable, or consult qualified building designer as per ANSI/TPI 1.
4) Gable requires continuous bottom chord bearing.
5) Gable studs spaced at 4-0-0 oc.
6) This truss has been designed for a 10.0 psf bottom chord live load nonconcurrent with any other live loads.
7) * This truss has been designed for a live load of 20.0psf on the bottom chord in all areas where a rectangle 3-06-00 tall by 2-00-00 wide will fit between the bottom chord and any other members, with BCDL = 10.0psf.
8) All bearings are assumed to be SP No.2 .
9) Provide mechanical connection (by others) of truss to bearing plate capable of withstanding 21 lb uplift at joint 1, 251 lb uplift at joint 9 and 248 lb uplift at joint 6.

LOAD CASE(S) Standard

March 12,2025

WARNING - Verify design parameters and READ NOTES ON THIS AND INCLUDED MITEK REFERENCE PAGE MII-7473 rev. 1/2/2023 BEFORE USE.
Design valid for use only with MiTek® connectors. This design is based only upon parameters shown, and is for an individual building component, not a truss system. Before use, the building designer must verify the applicability of design parameters and properly incorporate this design into the overall building design. Bracing indicated is to prevent buckling of individual truss web and/or chord members only. Additional temporary and permanent bracing is always required for stability and to prevent collapse with possible personal injury and property damage. For general guidance regarding the fabrication, storage, delivery, erection and bracing of trusses and truss systems, see **ANSI/TPI1 Quality Criteria and DSB-22** available from Truss Plate Institute (www.tpinst.org) and **BCSI Building Component Safety Information** available from the Structural Building Component Association (www.sbcacomponents.com)

ENGINEERING BY TRENCO A MiTek Affiliate
818 Soundside Road
Edenton, NC 27932

Job	Truss	Truss Type	Qty	Ply	JSJ Builders
4938997	V08	Valley	1	1	I71926236 Job Reference (optional)

Builders FirstSource (Sumter, SC), Sumter, SC - 29153, Run: 8.83 S Feb 18 2025 Print: 8.830 S Feb 18 2025 MiTek Industries, Inc. Mon Mar 10 12:56:56 Page: 1
ID:U7vcD5s6ztnCBJ9S86KBWUzcNXF-RfC?PsB70Hq3NSgPqnL8w3uITXbGKWrCDoi7J4zJC?f

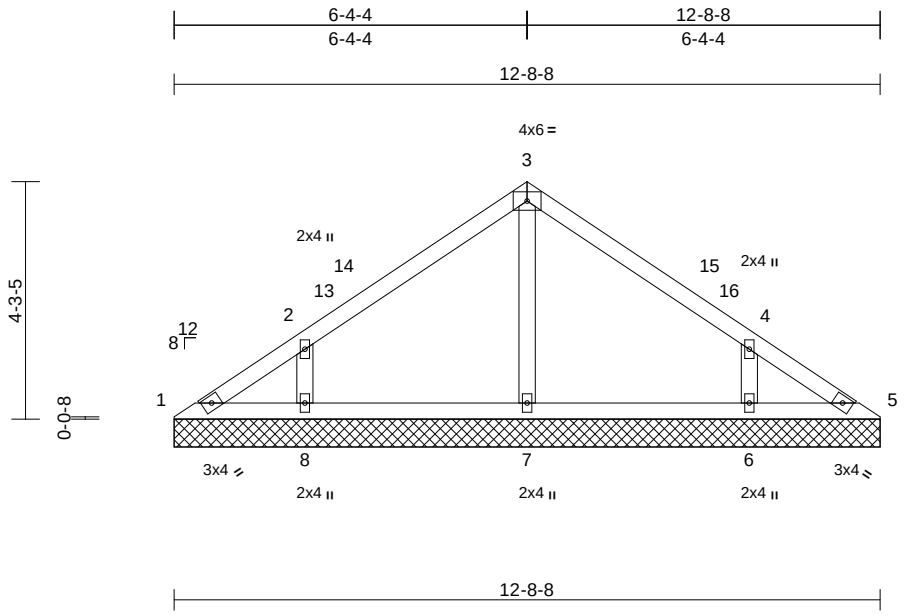

Scale = 1:41.5

Loading	(psf)	Spacing	2-0-0	CSI		DEFL	in	(loc)	l/defl	L/d	PLATES	GRIP
TCLL (roof)	20.0	Plate Grip DOL	1.15	TC	0.19	Vert(LL)	n/a	-	n/a	999	MT20	244/190
TCDL	10.0	Lumber DOL	1.15	BC	0.12	Vert(TL)	n/a	-	n/a	999		
BCLL	0.0*	Rep Stress Incr	YES	WB	0.07	Horiz(TL)	0.00	5	n/a	n/a		
BCDL	10.0	Code	IRC2015/TPI2014	Matrix-MS							Weight: 49 lb	FT = 20%

LUMBER
TOP CHORD 2x4 SP No.2
BOT CHORD 2x4 SP No.2
OTHERS 2x4 SP No.3

BRACING
TOP CHORD Structural wood sheathing directly applied or 6-0-0 oc purlins.
BOT CHORD Rigid ceiling directly applied or 10-0-0 oc bracing.

REACTIONS (size) 1=12-8-8, 5=12-8-8, 6=12-8-8, 7=12-8-8, 8=12-8-8
Max Horiz 1=-137 (LC 8)
Max Uplift 1=-31 (LC 8), 5=-3 (LC 12), 6=-193 (LC 13), 8=-196 (LC 12)
Max Grav 1=94 (LC 20), 5=69 (LC 19), 6=344 (LC 20), 7=272 (LC 1), 8=348 (LC 19)

FORCES (lb) - Maximum Compression/Maximum Tension
TOP CHORD 1-2=-127/117, 2-3=-128/131, 3-4=-128/117, 4-5=-90/64
BOT CHORD 1-8=-44/95, 7-8=-41/76, 6-7=-41/76, 5-6=-41/76
WEBS 3-7=-187/34, 2-8=-310/248, 4-6=-310/246

NOTES
1) Unbalanced roof live loads have been considered for this design.
2) Wind: ASCE 7-10; Vult=130mph (3-second gust) Vasd=103mph; TCDL=6.0psf; BCDL=6.0psf; h=25ft; Cat. II; Exp C; Enclosed; MWFRS (envelope) exterior zone and C-C Exterior (2) 0-0-12 to 3-0-12, Interior (1) 3-0-12 to 6-5-0, Exterior (2) 6-5-0 to 9-5-0, Interior (1) 9-5-0 to 12-9-4 zone; cantilever left and right exposed ; end vertical left and right exposed;C-C for members and forces & MWFRS for reactions shown; Lumber DOL=1.60 plate grip DOL=1.60
3) Truss designed for wind loads in the plane of the truss only. For studs exposed to wind (normal to the face), see Standard Industry Gable End Details as applicable, or consult qualified building designer as per ANSI/TPI 1.
4) Gable requires continuous bottom chord bearing.
5) Gable studs spaced at 4-0-0 oc.
6) This truss has been designed for a 10.0 psf bottom chord live load nonconcurrent with any other live loads.
7) * This truss has been designed for a live load of 20.0psf on the bottom chord in all areas where a rectangle 3-06-00 tall by 2-00-00 wide will fit between the bottom chord and any other members.
8) All bearings are assumed to be SP No.2 .
9) Provide mechanical connection (by others) of truss to bearing plate capable of withstanding 31 lb uplift at joint 1, 3 lb uplift at joint 5, 196 lb uplift at joint 8 and 193 lb uplift at joint 6.

LOAD CASE(S) Standard

March 12,2025

WARNING - Verify design parameters and READ NOTES ON THIS AND INCLUDED MITEK REFERENCE PAGE MII-7473 rev. 1/2/2023 BEFORE USE.
Design valid for use only with MiTek® connectors. This design is based only upon parameters shown, and is for an individual building component, not a truss system. Before use, the building designer must verify the applicability of design parameters and properly incorporate this design into the overall building design. Bracing indicated is to prevent buckling of individual truss web and/or chord members only. Additional temporary and permanent bracing is always required for stability and to prevent collapse with possible personal injury and property damage. For general guidance regarding the fabrication, storage, delivery, erection and bracing of trusses and truss systems, see **ANSI/TPI1 Quality Criteria and DSB-22** available from Truss Plate Institute (www.tpinst.org) and **BCSI Building Component Safety Information** available from the Structural Building Component Association (www.sbcacomponents.com)

ENGINEERING BY TRENCO A MiTek Affiliate
818 Soundside Road
Edenton, NC 27932

Job	Truss	Truss Type	Qty	Ply	JSJ Builders
4938997	V09	Valley	1	1	I71926237 Job Reference (optional)

Builders FirstSource (Sumter, SC), Sumter, SC - 29153,

Run: 8.83 S Feb 18 2025 Print: 8.830 S Feb 18 2025 MiTek Industries, Inc. Mon Mar 10 12:56:56 Page: 1
ID:q5iVGovFoPPVH41QxfwMDXzcNXA-RfC?PsB70Hq3NSgPqnL8w3uITXbGKWrCDoi7J4zJC?f

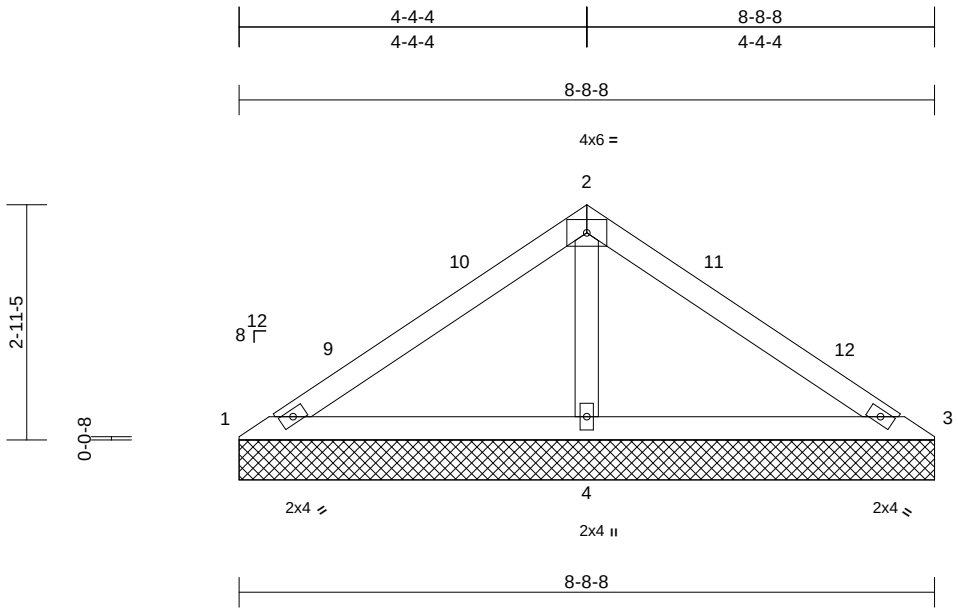

Scale = 1:28.9

Loading	(psf)	Spacing	2-0-0	CSI		DEFL	in	(loc)	l/defl	L/d	PLATES	GRIP
TCLL (roof)	20.0	Plate Grip DOL	1.15	TC	0.21	Vert(LL)	n/a	-	n/a	999	MT20	244/190
TCDL	10.0	Lumber DOL	1.15	BC	0.20	Vert(TL)	n/a	-	n/a	999		
BCLL	0.0*	Rep Stress Incr	YES	WB	0.10	Horiz(TL)	0.00	3	n/a	n/a		
BCDL	10.0	Code	IRC2015/TPI2014	Matrix-MS							Weight: 30 lb	FT = 20%

LUMBER
TOP CHORD 2x4 SP No.2
BOT CHORD 2x4 SP No.2
OTHERS 2x4 SP No.3

BRACING
TOP CHORD Structural wood sheathing directly applied or 8-8-8 oc purlins.
BOT CHORD Rigid ceiling directly applied or 6-0-0 oc bracing.

REACTIONS (size) 1=8-8-8, 3=8-8-8, 4=8-8-8
Max Horiz 1=-92 (LC 10)
Max Uplift 1=-9 (LC 24), 3=-23 (LC 8), 4=-168 (LC 12)
Max Grav 1=78 (LC 23), 3=78 (LC 24), 4=602 (LC 1)

FORCES (lb) - Maximum Compression/Maximum Tension
TOP CHORD 1-2=-98/259, 2-3=-97/257
BOT CHORD 1-4=-246/152, 3-4=-246/152
WEBS 2-4=-482/233

NOTES
1) Unbalanced roof live loads have been considered for this design.
2) Wind: ASCE 7-10; Vult=130mph (3-second gust) Vasd=103mph; TCDL=6.0psf; BCDL=6.0psf; h=25ft; Cat. II; Exp C; Enclosed; MWFRS (envelope) exterior zone and C-C Exterior (2) 0-0-12 to 3-0-12, Interior (1) 3-0-12 to 4-5-0, Exterior (2) 4-5-0 to 7-5-0, Interior (1) 7-5-0 to 8-9-4 zone; cantilever left and right exposed ; end vertical left and right exposed;C-C for members and forces & MWFRS for reactions shown; Lumber DOL=1.60 plate grip DOL=1.60
3) Truss designed for wind loads in the plane of the truss only. For studs exposed to wind (normal to the face), see Standard Industry Gable End Details as applicable, or consult qualified building designer as per ANSI/TPI 1.
4) Gable requires continuous bottom chord bearing.
5) Gable studs spaced at 4-0-0 oc.
6) This truss has been designed for a 10.0 psf bottom chord live load nonconcurrent with any other live loads.
7) * This truss has been designed for a live load of 20.0psf on the bottom chord in all areas where a rectangle 3-06-00 tall by 2-00-00 wide will fit between the bottom chord and any other members.
8) All bearings are assumed to be SP No.2 .
9) Provide mechanical connection (by others) of truss to bearing plate capable of withstanding 9 lb uplift at joint 1, 23 lb uplift at joint 3 and 168 lb uplift at joint 4.

LOAD CASE(S) Standard

March 12,2025

WARNING - Verify design parameters and READ NOTES ON THIS AND INCLUDED MITEK REFERENCE PAGE MII-7473 rev. 1/2/2023 BEFORE USE.
Design valid for use only with MiTek® connectors. This design is based only upon parameters shown, and is for an individual building component, not a truss system. Before use, the building designer must verify the applicability of design parameters and properly incorporate this design into the overall building design. Bracing indicated is to prevent buckling of individual truss web and/or chord members only. Additional temporary and permanent bracing is always required for stability and to prevent collapse with possible personal injury and property damage. For general guidance regarding the fabrication, storage, delivery, erection and bracing of trusses and truss systems, see **ANSI/TPI1 Quality Criteria and DSB-22** available from Truss Plate Institute (www.tpinst.org) and **BCSI Building Component Safety Information** available from the Structural Building Component Association (www.sbcacomponents.com)

ENGINEERING BY TRENCO A MiTek Affiliate
818 Soundside Road
Edenton, NC 27932

Job	Truss	Truss Type	Qty	Ply	JSJ Builders
4938997	V10	Valley	1	1	I71926238 Job Reference (optional)

Builders FirstSource (Sumter, SC), Sumter, SC - 29153,

Run: 8.83 S Feb 18 2025 Print: 8.830 S Feb 18 2025 MiTek Industries, Inc. Mon Mar 10 12:56:56 Page: 1
ID:jsx05AzlsewwmhLBAV_IONzcNX6-RfC?PsB70Hq3NSgPqnL8w3uITXbGKWrCDoi7J4zJC?f

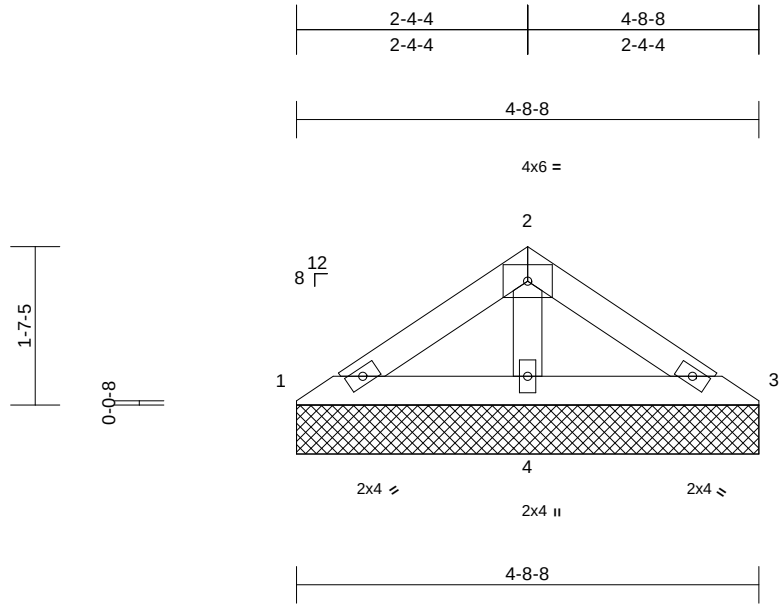

Scale = 1:23.5

Loading	(psf)	Spacing	2-0-0	CSI		DEFL	in	(loc)	l/defl	L/d	PLATES	GRIP
TCLL (roof)	20.0	Plate Grip DOL	1.15	TC	0.05	Vert(LL)	n/a	-	n/a	999	MT20	244/190
TCDL	10.0	Lumber DOL	1.15	BC	0.07	Vert(TL)	n/a	-	n/a	999		
BCLL	0.0*	Rep Stress Incr	YES	WB	0.03	Horiz(TL)	0.00	3	n/a	n/a		
BCDL	10.0	Code	IRC2015/TPI2014	Matrix-MP							Weight: 15 lb	FT = 20%

LUMBER
TOP CHORD 2x4 SP No.2
BOT CHORD 2x4 SP No.2
OTHERS 2x4 SP No.3

BRACING
TOP CHORD Structural wood sheathing directly applied or 4-8-8 oc purlins.
BOT CHORD Rigid ceiling directly applied or 6-0-0 oc bracing.

REACTIONS (size) 1=4-8-8, 3=4-8-8, 4=4-8-8
Max Horiz 1=-48 (LC 8)
Max Uplift 1=-14 (LC 12), 3=-22 (LC 13), 4=-68 (LC 12)
Max Grav 1=62 (LC 23), 3=62 (LC 24), 4=274 (LC 1)

FORCES (lb) - Maximum Compression/Maximum Tension
TOP CHORD 1-2=-59/91, 2-3=-59/86
BOT CHORD 1-4=-95/70, 3-4=-95/70
WEBS 2-4=-165/80

NOTES
1) Unbalanced roof live loads have been considered for this design.
2) Wind: ASCE 7-10; Vult=130mph (3-second gust) Vasd=103mph; TCDL=6.0psf; BCDL=6.0psf; h=25ft; Cat. II; Exp C; Enclosed; MWFRS (envelope) exterior zone and C-C Exterior (2) zone; cantilever left and right exposed ; end vertical left and right exposed;C-C for members and forces & MWFRS for reactions shown; Lumber DOL=1.60 plate grip DOL=1.60
3) Truss designed for wind loads in the plane of the truss only. For studs exposed to wind (normal to the face), see Standard Industry Gable End Details as applicable, or consult qualified building designer as per ANSI/TPI 1.
4) Gable requires continuous bottom chord bearing.
5) Gable studs spaced at 4-0-0 oc.
6) This truss has been designed for a 10.0 psf bottom chord live load nonconcurrent with any other live loads.
7) * This truss has been designed for a live load of 20.0psf on the bottom chord in all areas where a rectangle 3-06-00 tall by 2-00-00 wide will fit between the bottom chord and any other members.
8) All bearings are assumed to be SP No.2 .
9) Provide mechanical connection (by others) of truss to bearing plate capable of withstanding 14 lb uplift at joint 1, 22 lb uplift at joint 3 and 68 lb uplift at joint 4.

LOAD CASE(S) Standard

March 12,2025

WARNING - Verify design parameters and READ NOTES ON THIS AND INCLUDED MITEK REFERENCE PAGE MII-7473 rev. 1/2/2023 BEFORE USE.
Design valid for use only with MiTek® connectors. This design is based only upon parameters shown, and is for an individual building component, not a truss system. Before use, the building designer must verify the applicability of design parameters and properly incorporate this design into the overall building design. Bracing indicated is to prevent buckling of individual truss web and/or chord members only. Additional temporary and permanent bracing is always required for stability and to prevent collapse with possible personal injury and property damage. For general guidance regarding the fabrication, storage, delivery, erection and bracing of trusses and truss systems, see **ANSI/TPI1 Quality Criteria and DSB-22** available from Truss Plate Institute (www.tpinst.org) and **BCSI Building Component Safety Information** available from the Structural Building Component Association (www.sbcacomponents.com)

ENGINEERING BY TRENCO A MiTek Affiliate
818 Soundside Road
Edenton, NC 27932

Symbols

PLATE LOCATION AND ORIENTATION

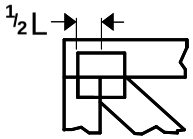

Center plate on joint unless x, y offsets are indicated. Dimensions are in ft-in-sixteenths. Apply plates to both sides of truss and fully embed teeth.

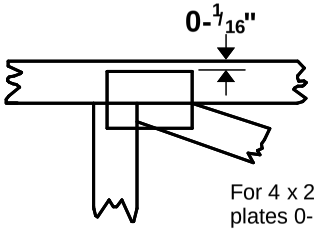

For 4 x 2 orientation, locate plates 0- 1/16" from outside edge of truss.

This symbol indicates the required direction of slots in connector plates.

* Plate location details available in MiTek software or upon request.

PLATE SIZE

4 x 4

The first dimension is the plate width measured perpendicular to slots. Second dimension is the length parallel to slots.

LATERAL BRACING LOCATION

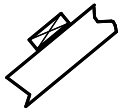

Indicated by symbol shown and/or by text in the bracing section of the output. Use T or I bracing if indicated.

BEARING

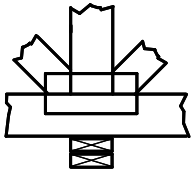

Indicates location where bearings (supports) occur. Icons vary but reaction section indicates joint number/letter where bearings occur. Min size shown is for crushing only.

Industry Standards:

ANSI/TPI1: National Design Specification for Metal Plate Connected Wood Truss Construction.
DSB-22: Design Standard for Bracing.
BCSI: Building Component Safety Information, Guide to Good Practice for Handling, Installing, Restraining & Bracing of Metal Plate Connected Wood Trusses.

Numbering System

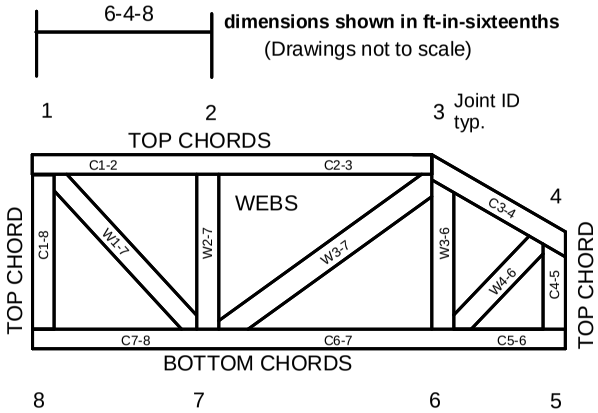

JOINTS ARE GENERALLY NUMBERED/LETTERED CLOCKWISE AROUND THE TRUSS STARTING AT THE JOINT FARTHEST TO THE LEFT.

CHORDS AND WEBS ARE IDENTIFIED BY END JOINT NUMBERS/LETTERS.

Product Code Approvals

ICC-ES Reports:

ESR-1988, ESR-2362, ESR-2685, ESR-3282
ESR-4722, ESL-1388

Design General Notes

Trusses are designed for wind loads in the plane of the truss unless otherwise shown.

Lumber design values are in accordance with ANSI/TPI 1 section 6.3 These truss designs rely on lumber values established by others.

© 2023 MiTek® All Rights Reserved

MiTek®

ENGINEERING BY TRENCO
A MiTek Affiliate

General Safety Notes

Failure to Follow Could Cause Property Damage or Personal Injury

1. Additional stability bracing for truss system, e.g. diagonal or X-bracing, is always required. See BCSI.
2. Truss bracing must be designed by an engineer. For wide truss spacing, individual lateral braces themselves may require bracing, or alternative Tor I bracing should be considered.
3. Never exceed the design loading shown and never stack materials on inadequately braced trusses.
4. Provide copies of this truss design to the building designer, erection supervisor, property owner and all other interested parties.
5. Cut members to bear tightly against each other.
6. Place plates on each face of truss at each joint and embed fully. Knots and wane at joint locations are regulated by ANSI/TPI 1.
7. Design assumes trusses will be suitably protected from the environment in accord with ANSI/TPI 1.
8. Unless otherwise noted, moisture content of lumber shall not exceed 19% at time of fabrication.
9. Unless expressly noted, this design is not applicable for use with fire retardant, preservative treated, or green lumber.
10. Camber is a non-structural consideration and is the responsibility of truss fabricator. General practice is to camber for dead load deflection.
11. Plate type, size, orientation and location dimensions indicated are minimum plating requirements.
12. Lumber used shall be of the species and size, and in all respects, equal to or better than that specified.
13. Top chords must be sheathed or purlins provided at spacing indicated on design.
14. Bottom chords require lateral bracing at 10 ft. spacing, or less, if no ceiling is installed, unless otherwise noted.
15. Connections not shown are the responsibility of others.
16. Do not cut or alter truss member or plate without prior approval of an engineer.
17. Install and load vertically unless indicated otherwise.
18. Use of green or treated lumber may pose unacceptable environmental, health or performance risks. Consult with project engineer before use.
19. Review all portions of this design (front, back, words and pictures) before use. Reviewing pictures alone is not sufficient.
20. Design assumes manufacture in accordance with ANSI/TPI 1 Quality Criteria.
21. The design does not take into account any dynamic or other loads other than those expressly stated.