https://autode.sk/3VfHUvV DISCLAIMER: 3D MODEL PROVIDED FOR VISUAL REFERENCE ONLY. IF THERE ARE DISCREPANCIES, REFER TO JOB PDF.

Architecture Plan Review: ☒ No Comments ☐ See Comments Items drawn on any drawings and not written in the contract selctions **WILL NOT** be included in the site specific drawings.

Customer Request:	Design Solution:	Reason For Modification:	Comments:
1. XXX	1. XXX	1. XXX	1. XXX
2. XXX	2. XXX	2. XXX	2. XXX
3. XXX	3. XXX	3. XXX	3. XXX
4. XXX	4. XXX	4. XXX	4. XXX

Square Footage

Living Areas

FIRST FLOOR	2511 SF
SECOND FLOOR	724 SF
	3235 SF

Unfinished Areas

GARAGE	725 SF
OUTDOOR LIVING	165 SF
PORCH	132 SF
UNFINISHED STORAGE	76 SF
	1098 SF

Square Footage total may vary by +1 SF due to automated rounding of first and second floor area

Redraws

Plan Review: XX/XX/XX

Xxxxx

Plan Review: XX/XX/XX

Xxxxx

Customer Plan Review Signature

I understand that my new Drees home will be built in general comformance to the plans, specifications, selections and the Purchase Agreement, all of which I have reviewed and approved. This set of plans may not reflect the elevations or options for my house. Drees draws the standard plans complete with the most common options. The subcontractor's sets will show only the options I selected in my selection sheets. I have reviewed the plot plan for my house and understand that there may be some field adjustments as to the exact location of the house on the lot. I further understand that my home will not be built exactly like any other Drees home or Model and that some minor variations from my plans and specifications may occur since every home that is built has it's own set of unique construction problems that must be dealt with as the home is being built.

Customer: _____ Date: _____

Customer: _____ Date: _____

Division: Raleigh

Building Code: 2018 NC Building Code - Residential

Index to the Drawings

Sheet No.	Sheet Name
0C.1	Cover Sheet
0N.1	General Notes
0P.1	Plot Plan
1.01S	Foundation Plan
2.01F	First Floor Framing Plan
2.01S	First Floor Structural Plan
2.02F	Second Floor Framing Plan
2.02S	Second Floor Structural Plan
2.04	Roof Plan
3.02	Second Floor Subfloor Plan
4.01	First Floor Mechanical Plan
4.02	Second Floor Mechanical Plan
5.01	Building Section
6.01	Front Elevation
6.02	Garage Side Elevation
6.03	Rear Elevation
6.04	Side Elevation
7.01	House Specific Details
7.02	House Specific Details
SD-0-RAL	Structural Notes
SD-1	Structural Notes

Space for Architect Seal

The Drees Company
09/09/2025 3:13:42 PM

RESIDENCE FOR:

LOWERY

90 GOLDEN LEAF FARMS ROAD
TOBACCO ROAD

Job Number:	Drawing Date:	Coord Name:	Coord Phone:
TBRD-0038-00	8/22/2025	GREG P.	859-578-4355

House Name: Drawing Scale: 1/8" = 1'0"

the PARKETTE

Contract Drawn By: EWT

Series: EXECUTIVE

Plan No.:

Standard House 3D Model Link:

Drees HOMES®

8521 Six Forks Road, Suite 500, Raleigh, NC 27615
Phone: (919) 844-9288

Born on Date: 07/11/23

CDs Drawn By: CLM

Sheet Information

0C.1

Cover Sheet

Elevation "G"

K:\Contracts\SOUTHEASTRALEIGH\TBRD\TBRD-0038-00\TBRD-0038-00.rvt

8/25/2025 10:18:46 AM

GENERAL NOTES - RALEIGH

FOUNDATION NOTES

CRAWL SPACES:
- SLOPE CONCRETE SLAB 4" MINIMUM TOWARDS GARAGE DOOR
- EXTERIOR FLATWORK/GARAGES SHALL HAVE A MINIMUM CONCRETE SRENGTH OF 4,500 PSI
- FOOTINGS TO A MINIMUM CONCRETE STRENGTH OF 2500 PSI, UNLESS OTHERWISE NOTED
- ASSUMED ALLOWABLE SOIL BEARING PRESSURE: 2,000 p.s.f.
- WATERPROOF FOUNDATION WITH BITUMINOUS SPRAY.
- WALL TIES EMBEDDED IN THE HORIZONTAL MORTAR JOINT SHALL BE 16" ON CENTER. TIES IN ALTERNATE COURSES SHALL BE STAGGERED. THE MAXIMUM VERTICAL DISTANCE BETWEEN TIES SHALL NOT EXCEED 16" AND THE MAXIMUM HORIZONTAL DISTANCE SHALL NOT EXCEED 16" ADDITIONAL TIES SHALL BE PROVIDED AT ALL OPENINGS, AND WITHIN 12" OF THE OPENING.
- CORE FILL ENTIRE BLOCK WALL WHEN THE WALL IS 4'-0" TALL OR HIGHER. INSTALL #4 REBAR IN EACH HOLLOW AREA OF EACH BLOCK FROM FOOTING TO TOP OF WALL, ON THE ENTIRE WALL PRIOR TO CORE FILLING IT.
- TOP COURSE OF BLOCK ON ALL WALLS WILL BE FILLED SOLID WITH MORTAR PLACING THE FOUNDATION STRAPS OR BOLTS IN THE MORTAR 6'-0" ON CENTER, AND 12" FROM EACH CORNER.
- 12"x16" PIERS: HOLLOW MASONRY UP TO 48" HIGH, SOLID MASONRY UP TO 9'0" HIGH
- 16"x16" PIERS: HOLLOW MASONRY UP TO 64" HIGH, SOLID MASONRY UP TO 12'0" HIGH
- BLOCK PIERS SHOULD BE PLACED DIRECTLY ON CONCRETE FOOTINGS PER PLAN. THEY SHOULD BE PLUMBED AND SQUARE WITHIN ¼".
- SILL PLATES TO BE A MINIMUM OF 2x4 NOMINAL LUMBER.

FRAMING NOTES

DESIGN LOADS:
FLOORS: 40 psf LIVE LOAD + 10 psf DEAD LOAD = 50 psf GARAGE FLOOR: 50 psf LIVE LOAD SEISMIC: "A" & "B"
ROOF: 18 psf LIVE LOAD + 17psf DEAD LOAD = 35 psf WIND SPEED: 120 MPH
DESIGN DEFLECTION LIMITS (BASED ON LIVE LOAD, EXCEPT MASONRY):
RAFTERS GREATER THAN 3:12 L/180 CEILINGS L/240
MASONRY VENEER L/600
NOMINAL LUMBER FLOORS: L/360
MANUFACTURED WOOD FLOORS: DESIGNED TO MINIMUM PRO RATING OF 35 (OR EQUIVALENT).
NO MORE THAN 8 POINT DIFFERENCE BETWEEN ADJACENT SPANS.
L/480 FOR SPANS UP TO 16'-0" AND NO GREATER THAN 1/2" DEFLECTION
L/600 FOR SPANS OVER 16'-0" IF SIMPLE SPAN AND NO GREATER THAN 1/2" DEFLECTION
L/840 FOR SPANS OVER 16'-0" IF CONTINUOUS SPAN. AND NO GREATER THAN 1/2" DEFLECTION

-JOIST SPACING: 19.2" o.c. MAXIMUM SPACING
DOUBLE EVERY OTHER FLOOR JOIST UNDER KITCHEN ISLANDS
INSTALL UNCOUPLING MEMBRANE IN TILE FLOOR AREAS IF 19.2" o.c. FLOOR JOIST SPACING
GLUE AND MECHANICALLY FASTEN [SCREWS] WOOD FLOOR IF 19.2" o.c. FLOOR JOIST SPACING
- MANUFACTURED WOOD PRODUCTS (INCLUDING, BUT NOT LIMITED TO, STRUCTURAL WOOD BEAMS AND I-JOISTS) SHALL BE FABRICATED, HANDLED, AND INSTALLED IN ACCORDANCE WITH THE MANUFACTURER'S INSTRUCTIONS.
-JOISTS ARE NOT TO BE PLACED DIRECTLY OVER INTERIOR PARALLEL WALLS. (TO PREVENT UNEVEN FLOOR DEFLECTION FROM OCCURRING)
- ALL WOOD BEAMS/HEADERS: 2x6's TO BE SPF STUD GRADE OR BETTER/ 2x8 OR LARGER TO BE SYP #2 [PER NDS 2012] OR BETTER, U.O.N.
- ALL HEADERS SHALL BE SUPPORTED BY (1) 2x JACK STUD AND (1) 2x KING STUD MINIMUM. THE NUMBER OF STUDS SPECIFIED AT A SUPPORT INDICATES THE NUMBER OF JACKS REQUIRED, U.N.O. AT FLUSH OR DROPPED BEAMS, THE NUMBER OF STUDS SPECIFIED INDICATES THE TOTAL NUMBER OF STUDS REQUIRED TO SUPPORT THE BEAM.
- EXTERIOR WALLS TO BE 2x4 SPF STUD GRADE AT 16" o.c. UNLESS OTHERWISE NOTED (10'4-1/2" MAXIMUM WALL HEIGHT)
- ALL INTERIOR BEARING WALLS AND WALLS AT BASEMENT & FIRST FLOOR STAIRWELLS, KITCHEN, BATH, & GARAGE TO BE 2x4 SPF STUD GRADE @ 16" o.c.; ALL OTHER NON-BEARING INTERIOR WALLS TO BE 2x4 SPF STUD GRADE @ 24" o.c. U.O.N.
- ALL WALLS TO BE 3 1/2" UNLESS OTHERWISE NOTED.
- PROVIDE SOLID BEARING TO FOUNDATION OR BEAM BELOW FOR ALL BEAMS, HEADERS & GIRDER TRUSSES. PROVIDE BLOCKING BETWEEN JOISTS AS REQUIRED.
- SEE SELECTION SHEET FOR SIZE AND STYLE OF FIREPLACE. SEE FIREPLACE ELEVATION DETAIL FOR ADDITIONAL FRAMING REQUIREMENTS, IF ANY.
- CHECK SELECTION SHEETS FOR FLOOR COVERING AT TOP AND BOTTOM OF STAIR RISERS AND ADJUST RISERS AS REQ'D.
- PROVIDE BLOCKING AT ALL HANDRAIL TERMINATION AND BRACKET LOCATIONS.
- 20-MINUTE FIRE RATED DOOR BETWEEN GARAGE AND LIVING AREA.
- EXTERIOR WALL TO BE 2x4 SPF STUD G AT 16" o.c. UNLESS OTHERWISE NOTED (10'-0" MAXIMUM UNBRACED WALL HEIGHT).
- ALL EXTERIOR WALLS AND INTERIOR BEARING WALLS, FRAMED HIGHER THAN THE STANDARD PLATE HEIGHT, SHALL BE FRAMED WITH CONTINUOUS FULL HEIGHT STUDS TO THE HIGHEST CEILING (I.E. NO INTERMEDIATE BREAKS) TO PREVENT LATERAL HINGE CONDITIONS.
- IN THE GARAGE, PROVIDE 1/2" GYP. BOARD AT ALL WALLS COMMON TO LIVING SPACE AND ALL STRUCTURAL MEMBERS SUPPORTING FLOOR/CEILING ASSEMBLY. GARAGE CEILING TO BE 1/2" SAG RESISTANT GYP. BOARD WHEN THERE ARE NO HABITABLE SPACES ABOVE, OR 5/8" TYPE X GYP. BOARD WHEN HABITABLE SPACES ARE ABOVE.
- ALL EMERGENCY ESCAPE & RESCUE OPENINGS TO BE A MAXIMUM OF 44" OFF OF FINISHED FLOOR AND HAVE MINIMUM OPENING DIMENSIONS OF 24" IN HEIGHT, 20" IN WIDTH, & HAVE A MINIMUM OPENING AREA OF 5.7 S.F.
ALL DOORS TO BE 6'-8" TALL UNLESS OTHERWISE NOTED.
- ALL GLASS IN INTERIOR AND EXTERIOR DOORS TO BE TEMPERED (INCLUDING SIDELITES AND TRANSOMS)
- ALL LUMBER CONTACTING CONCRETE TO BE PRESSURE TREATED.
- ALL FASTENERS, HANGERS, AND OTHER CONNECTORS TO BE USED WITH PRESSURE TREATED WOOD ARE TO HAVE ZMAX COATING (OR EQUIVALENT) HOT-DIPPED GALVANIZED OR STAINLESS STEEL.
- AT STAIR HANDRAIL, ON ONE SIDE ONLY, SHALL BE CONTINUOUS FOR THE ENTIRE LENGTH OF THE STAIRWAY, AND ENDS SHALL BE RETURNED TO A WALL OR POST. THE HANDRAIL MAY BE INTERRUPTED AT A NEWEL POST AT A TURN.
- ALL HANDRAIL GRIP PORTIONS SHALL NOT EXCEED 2-1/4" IN CROSS SECTIONAL DIMENSION.
- HANDRAILS SHALL BE INSTALLED ON ALL STAIRS WITH 4 OR MORE RISERS, HANDRAIL HEIGHTS SHALL BE A MINIMUM OF 34" AND A MAXIMUM OF 38".
- ALL STAIRS TO BE CONSTRUCTED SO AS NOT TO ALLOW A 4" SPHERE TO PASS THROUGH THE RISER.
- GUARDRAILS MUST BE A MINIMUM OF 36" HIGH. GUARDRAILS AT THE OPEN SIDES OF STAIRS MUST BE A MINIMUM OF 34" HIGH MEASURED VERTICALLY FROM THE NOSING AT THE TREADS. THE HORIZONTAL SPACING OF THE VERTICAL BALUSTERS SHALL BE 4" O.C.
- GUARDRAIL DESIGN TO RESIST A MINIMUM OF 200 LBS LATERAL FORCE

BASEMENTS:
- SLOPE CONCRETE SLAB 4" MINIMUM TOWARDS GARAGE DOOR
- EXTERIOR FLATWORK/GARAGES SHALL HAVE A MINIMUM CONCRETE SRENGTH OF 4,500 PSI
- FOOTINGS TO A MINIMUM CONCRETE STRENGTH OF 2500 PSI, UNLESS OTHERWISE NOTED- ALL FOUNDATION WALLS TO BE CAST IN PLACE CONCRETE 3000 PSI MIN. UNLESS OTHERWISE NOTED.
- BASEMENT WINDOW LOCATIONS MAY VARY FROM DRAWING DUE TO LOT CONDITIONS.
- BACKFILL ADJACENT TO FOUNDATION WALLS SHALL NOT BE PLACED UNTIL THE WALL HAS SUFFICIENT STRENGTH AND HAS BEEN ANCHORED TO THE FLOOR OR HAS BEEN SUFFICIENTLY BRACED TO PREVENT DAMAGE BY THE BACKFILL.
- ASSUMED ALLOWABLE SOIL BEARING PRESSURE: 2,000 p.s.f.
- WATERPROOF FOUNDATION WITH BITUMINOUS SPRAY.
- VERTICAL CONTROL JOINTS IN BASEMENT FOUNDATION WALLS - STANDARD LOCATION GUIDELINES:
1) PLACE A CONTROL JOINT IN ALL UNBRACED WALLS OVER 30' IN LENGTH. (NOTE: "T" WALLS AND CORNERS COUNT AS A BRACE).
2) WINDOWS THAT ARE LARGER THAN THE STANDARD BASEMENT WINDOW REQUIRE A CONTROL JOINT.
3) CONTROL JOINTS ARE NOT REQUIRED AT EVERY WINDOW THAT IS STANDARD SIZE.
4) IF THERE IS A STANDARD WINDOW LOCATED IN A WALL SEGMENT THAT REQUIRES A CONTROL JOINT, THEN THE CONTROL JOINT SHOULD BE PLACED ON THE SIDE OF THE WINDOW THAT IS ADJACENT TO THE LONG SIDE OF THE WALL. IF THERE IS MORE THAN ONE WINDOW IN A WALL THEN ONLY ONE WINDOW SHOULD HAVE A CONTROL JOINT.
5) DOORS DO NOT GET CONTROL JOINTS.
6) CONTROL JOINTS SHOULD NOT BE LOCATED WITHIN 3' OF A BEAM POCKET.
7) CONTROL JOINTS ARE REQUIRED AT THE FIRST AND LAST STEP DOWN AT STEPPED BASEMENT FOUNDATION WALLS.
- INTERIOR FLATWORK SHALL HAVE A MINIMUM CONCRETE STRENGTH OF 3,000 PSI.
- ALL VERTICAL STEEL AND ALL STEEL IN STRUCTURAL SLABS TO BE GRADE 60. ALL HORIZONTAL STEEL IN FOUNDATION WALLS AND FOOTERS TO BE GRADE 40 STEEL.

SLAB ON GRADE:
- ALL CONCRETE SLABS ON GRADE SHALL BE THE THICKNESS AS INDICATED ON THE DETAILS OVER MINIMUM 6 MIL. POLYETHYLENE (VISQUEEN) VAPOR BARRIER. SLABS SHALL BE REINFORCED WITH 6x6 W1.4 WWF LAPPED 8" AT EDGES AND ENDS IN CONFORMANCE WITH ASTM-A 185, OR FIBERMESS REINFORCEMENT SHALL BE USED WITH A MINIMUM FIBER LENGTH OF $\frac{1}{2}$" TO 2 $\frac{1}{4}$" COMPLYING WITH ASTM C 1116. THE DOSAGE AMOUNT SHALL BE 0.75 TO 3.0 POUNDS PER CUBIC YARD IN ACCORDANCE WITH MANUFA TURER'S RECOMMENDATIONS.
- SLABS ON GRADE SHALL BEAR ON STRUCTURAL FILL WHICH SHALL BE CLEAN SAND FREE OF DEBRIS AND OTHER DELETERIOUS MATERIAL. STRUCTURAL FILL SHALL BE COMPACTED TO A DENSITY OF AT LEAST 95% OF THE MODIFIED PROCTOR MAXIMUMN DRY DENSITY (ASTM D1557). TERMITE PROTECTION SHALL BE PROVIDED IN ACCORDANCE WITH APPLICABLE CODE REQUIREMENTS. IF SOIL TREATMENT IS USED, THE TREATMENT SHALL BE DONE AFTER ALL EXCAVATION, BACKFILLING, AND COMPACTION IS COMPLETED.
- FOOTINGS MAY BEAR UPON UNDISTURBED SOIL OR UPON STRUCTURAL FILL. STRUCTURAL FILL SHALL BE COMPACTED TO A DENSITY OF AT LEAST 95% OF THE MODIFIED PROCTOR MAXIMUMN DRY DENSITY (ASTM D1557) FOR A DEPTH OF AT LEAST TWO FEET (2'-0") BELOW THE BOTTOM OF THE FOOTING.
- THE FOLLOWING MINIMUM CONCRETE COVER SHALL BE PROVIDED FOR REINFORCEMENT:
3" CONCRETE CAST AGAINST AND PERMANENTLY EXPOSED TO EARTH
2" CONCRETE EXPOSED TO EARTH AND WEATHER
1 $\frac{1}{2}$" CONCRETE NOT EXPOSED TO EARTH OR WEATHER
- SLOPE CONCRETE SLAB 4" MINIMUM TOWARDS GARAGE DOOR
- EXTERIOR FLATWORK/GARAGES SHALL HAVE A MINIMUM CONCRETE SRENGTH OF 4,500 PSI
- ASSUMED ALLOWABLE SOIL BEARING PRESSURE: 2,000 p.s.f.
- INTERIOR FLATWORK SHALL HAVE A MINIMUM CONCRETE STRENGTH OF 3,000 PSI.
- ALL STEEL IN STRUCTURAL SLABS TO BE GRADE 60. ALL HORIZONTAL STEEL IN FOUNDATION WALLS AND FOOTERS TO BE GRADE 40 STEEL.

MECHANICAL/ELECTRICAL NOTES

- ANY GAS APPLIANCES MUST BE INSTALLED PER MANUFACTURER'S SPECIFICATIONS.
- HOLD THE CENTERLINE OF ALL EXTERIOR LIGHT FIXTURES AT 5'-8" OFF BOTTOM OF DOOR OPENING.
- ALL KITCHEN CABINET DIMENSIONS ARE CABINET TO CABINET.
- CABINET STYLES MAY VARY FROM INTERIOR ELEVATIONS DEPENDING ON STYLE, MANUFACTURER, ETC. FOR CABINET DETAILS SEE SHOP DRAWINGS.
- CABINET SIZES MAY VARY WITH FULL-OVERLAY CABINETS.
- GROUND FAULT INTERRUPTER (GFCI) OUTLETS TO BE INSTALLED PER NEC 2017, SECT. 210.8
- PROVIDE HOSE BIBS PER DIVISION SPEC. SHEET. EXACT LOCATION TO BE FIELD DETERMINED UNLESS OTHERWISE NOTED ON THE PLANS.
- MIN. 50 C.F.M. FOR ALL EXHAUST FANS IN BATHROOMS

INSULATION DETAILS
EXTERIOR STUD WALL CAVITY: (2x4) R-15
(2x6) R-19
FLOOR JOIST CAVITY AT STANDARD PERIMETER: R-19
FLOOR JOIST CAVITY AT CANTILEVER: R-19
OVER GARAGE: (OVER HORIZONTAL SPACE) R-38 BLOWN
(SLOPED AND VERTICAL SPACE) R-38 BATT

ELEVATION NOTES

- WINDOW STYLE AND MULLIONS MAY VARY FROM ELEVATION DEPENDING UPON MANUFACTURER, STYLE, PATTERN, TYPE, ETC.
- USE SECONDARY HEAT BARRIER ON ALL DIRECT VENT FIREPLACES 7' OR LESS ABOVE A WALKWAY.
- GRADE AWAY FROM FOUNDATION WALLS SHALL FALL A MINIMUM OF 6" WITHIN THE FIRST 10'.
- PROVIDE TYVEK OR EQUIVALENT HOUSE WRAP BEHIND BRICK AND STONE VENEER OVER WOOD SHEATHING.
- PROVIDE BRICK WEEP HOLES AT 24" O.C. WITH BRICK VENEER AND MORTER NET BEHIND AND THROUGH WEEP HOLES.
- PROVIDE FLASHING AND WEEP HOLES ABOVE ALL BRICK ANGLE IRONS, BELOW ALL BRICK SILLS AND ABOVE SILL PLATE SEALERS.
- EXTERIOR STEPS TO HAVE A MAXIMUM 8" RISER. WHEN VERTICAL RISE EXCEEDS 30" OR FOUR OR MORE CONTINUOUS RISERS, A HANDRAIL IS REQUIRED.

ROOF PLAN NOTES

- ALL OVERHANGS TO HAVE (2) SOFFIT VENTS PER EACH 8' SOFFIT SECTION.
- PROVIDE BAFFLES AT EXTERIOR TRUSS BEARING FOR VENTILATION.
- PROVIDE 15# FELT PAPER UNDER SHINGLES.

Space for Architect Seal

NORTH CAROLINA REGISTERED SEAL 12648 ARCHITECT AMANDA K. SZOKE

The Drees Company
09/09/2025 3:13:42 PM

RESIDENCE FOR:
LOWERY
90 GOLDEN LEAF FARMS ROAD
TOBACCO ROAD

Job Number:	Drawing Date:	Coord Name:	Coord Phone:
TBRD-0038-00	8/22/2025	GREG P.	859-578-4355

House Name: Drawing Scale: 1/8" = 1'0"
the PARKETTE
Contract Drawn By: EWT
Series: EXECUTIVE
Plan No.:
Standard House 3D Model Link:
Born on Date: 07/11/23
CDs Drawn By: CLM

Drees HOMES®

Copyright © 2023 (2023) The Drees Company. All Rights Reserved.
8521 Six Forks Road, Suite 500, Raleigh, NC 27615
Phone: [919] 844-9288

Sheet Information
0N.1
General Notes
Elevation "G"

K:\Contracts\SOUTHEASTERN\RALEIGH\TBRD\TBRD-0038-00\TBRD-0038-00.rvt
8/25/2025 10:18:48 AM

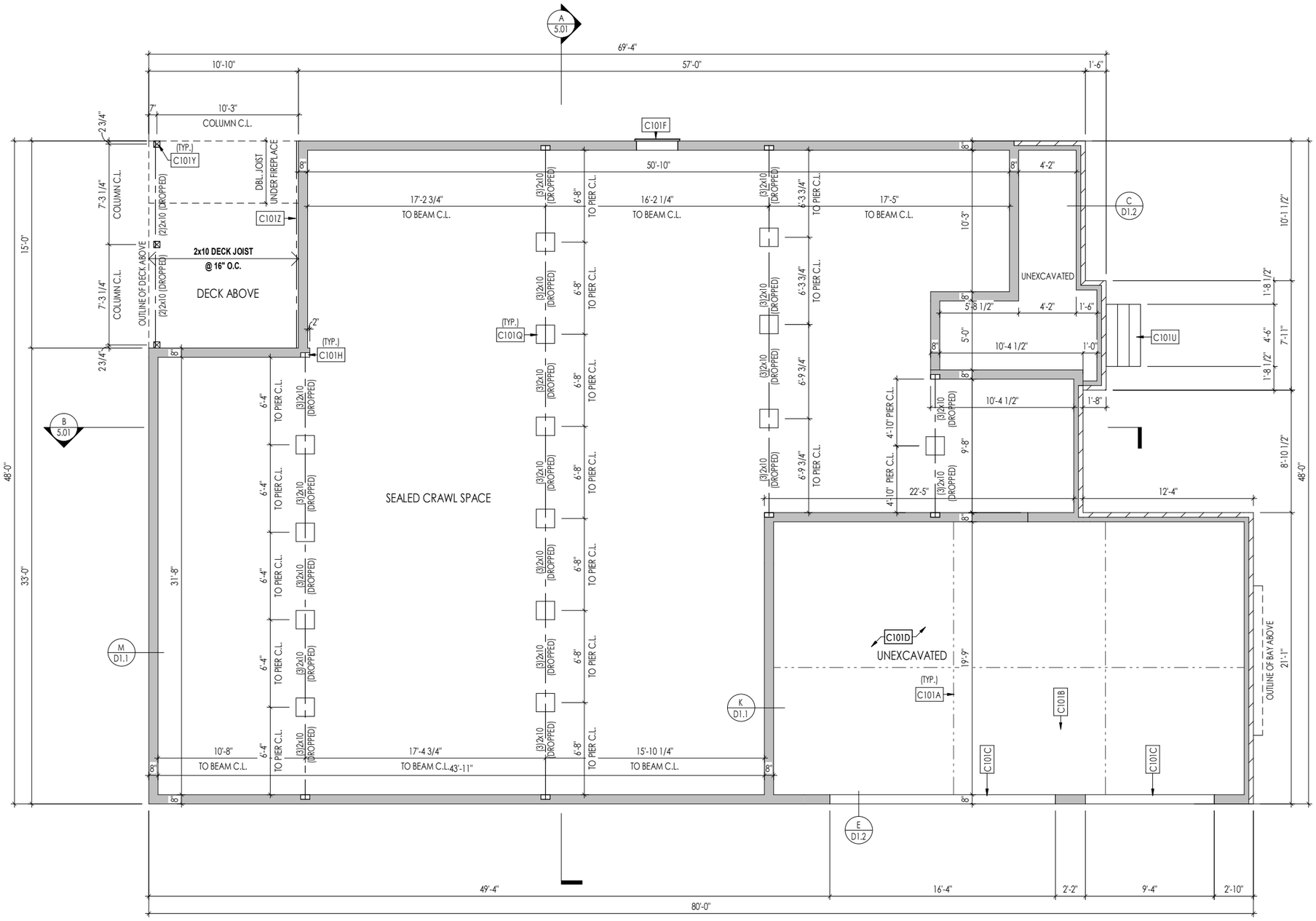

General Notes:

1. REFER TO SHEET 0N.1 FOR GENERAL NOTES.
2. ALL FOUNDATION WALLS TO BE 8" THICK UNLESS OTHERWISE NOTED.

Key Notes:

C101A	SLAB CONTROL JOINT
C101B	GARAGE SLAB TO BE HELD A MINIMUM OF 4" BELOW TOP OF FOUNDATION AND IS TO SLOPE 1/4" PER FOOT TOWARDS GARAGE DOOR
C101C	CONTINUOUS FOOTING AND FOUNDATION; DROP TO BE FIELD DETERMINED
C101D	4" CONCRETE SLAB (3000 PSI) OVER 4" CRUSHED STONE, OVER COMPACTED OR UNDISTURBED EARTH.
C101F	36"W x 30"H CRAWL SPACE ACCESS PANEL WITH DOUBLE BANDBOARD - BUILDER TO FIELD VERIFY LOCATION PER GRADE
C101H	8"W x 8"H x 4"D BEAM POCKET
C101Q	16"x16" CMU PIER W/ 30"x30"x12" PLAIN CONC. FOOTING
C101U	PORCH STEPS - RISE AND RUN TO BE FIELD DETERMINED
C101Y	6x6 P.T. POST W/ SIMPSON BCS2-3/6 CAP & ABW66Z BASE ON 16" DIA. SONOTUBE FOOTING TO FROST
C101Z	2x10 P.T. LEDGER FASTENED TO RIM w/ (3)14"x3-1/2" LONG SIMPSON SDS SCREWS @ 16" O.C.

Space for Architect Seal

NORTH CAROLINA REGISTERED SEAL 12648 ARCHITECT AMANDA K. SZOKE

The Drees Company
09/09/2025 3:13:42 PM

RESIDENCE FOR:

LOWERY

90 GOLDEN LEAF FARMS ROAD
TOBACCO ROAD

Job Number:	Drawing Date:	Coord Name:	Coord Phone:
TBRD-0038-00	8/22/2025	GREG P.	859-578-4355

House Name: Drawing Scale: 1/8" = 1'0"

the PARKETTE

Contract Drawn By: EWT
Series: EXECUTIVE
Plan No.:
Standard House 3D Model Link:
Born on Date: 07/11/23
CDs Drawn By: CLM

Drees HOMES®

Copyright © 2023 (2023) The Drees Company. All Rights Reserved.
8521 Six Forks Road, Suite 500, Raleigh, NC 27615
Phone: (919) 844-9288

Sheet Information

1.01
Foundation Plan
Elevation "G"

K:\Contracts\SOUTHEASTERN\EIGHT\TBRD\TBRD-0038-00\TBRD-0038-00.r4
08/27/2025 10:18:48 AM

PROVIDE 8' TALL DOORS THROUGHOUT FIRST FLOOR, U.N.O.

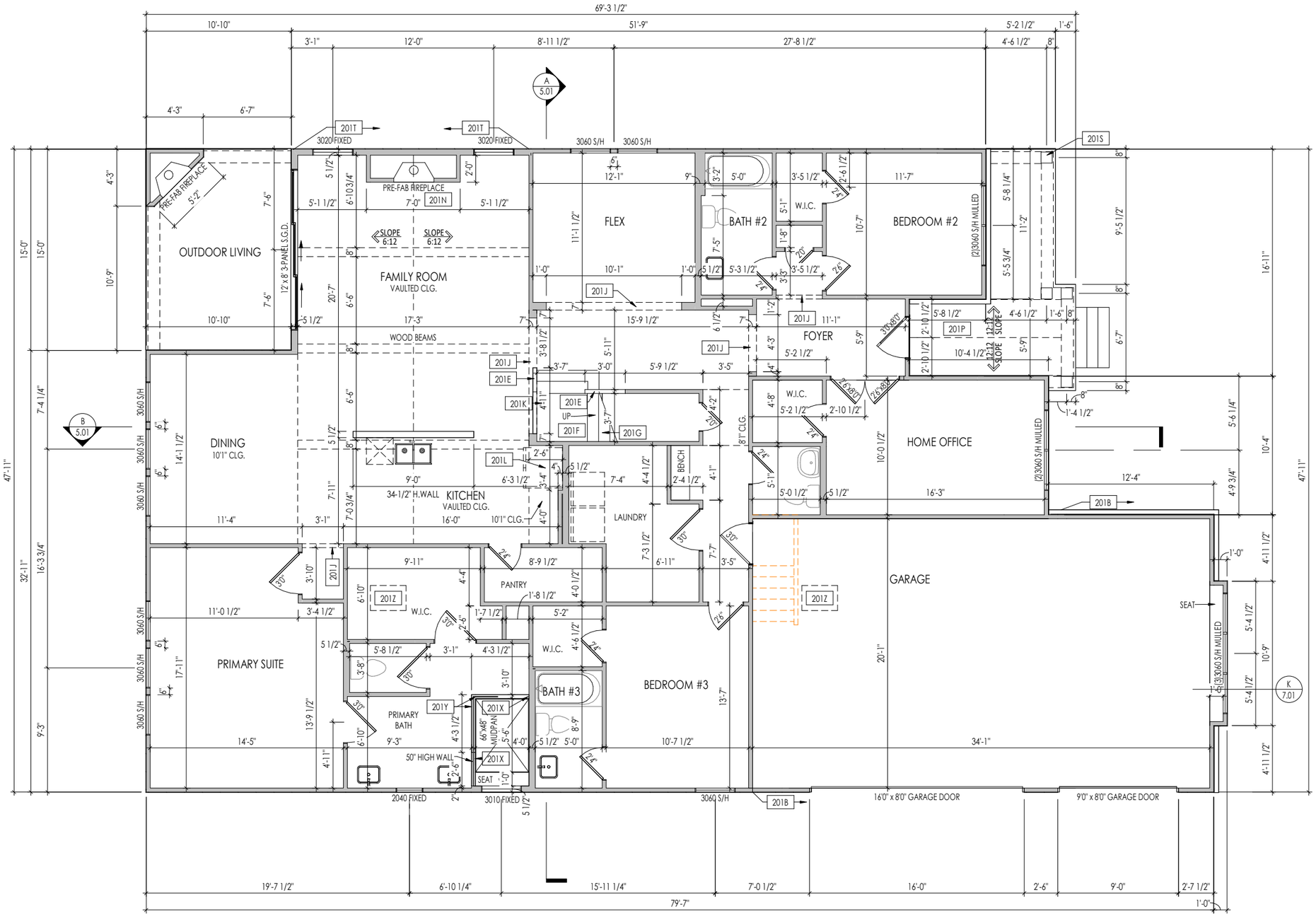

General Notes:

1. REFER TO SHEET 0N.1 FOR GENERAL NOTES.
2. ALL FIRST FLOOR CEILINGS TO BE 10'-1" ABOVE SUBFLOOR UNLESS OTHERWISE NOTED.
3. FRAME TOP OF ALL WINDOWS AT 1'-10" BELOW TOP OF PLATE UNLESS OTHERWISE NOTED.
4. ALL DROPPED, INTERIOR HEADERS (FALSE AND BEARING) ARE DROPPED 1'-3" FROM CEILING.
5. REFER TO SELECTION SHEETS FOR FLOORING MATERIAL PRIOR TO CONSTRUCTING STAIRS TO DETERMINE RISER HEIGHTS.
6. REFER TO SHEET 2.01S FOR STRUCTURAL INFORMATION.
7. REFER TO SHEET S-0 FOR STRUCTURAL DETAILS AND INFORMATION

Key Notes:

201B	FRAME GARAGE WALL FULL HEIGHT STUDS AT 11'-5 1/4" WITH 2x4 STUDS AT 16" O.C. FROM TOP OF FOUNDATION WALL; IF ELECTRICAL PANEL LOCATED IN GARAGE, PAD OUT WALL FOR ELECTRICAL PANEL
201E	SLOPE WALL EVEN WITH TOP OF STAIR STRINGER, RAILING ABOVE
201F	SEE DETAIL C/7.02 FOR STAIR FRAMING DETAILS
201G	APPROX. LOCATION OF 36" HIGH WALL UNDER STAIRS (FIELD VERIFY)
201J	FRAME TOP OF OPENING AT HEIGHT SPECIFIED IN GENERAL NOTES ON THIS SHEET
201K	50" HIGH WALL
201L	FRAME TOP OF OPENING AT REFRIGERATOR AT 6'-1 1/2" A.F.F.
201N	PRE-FABRICATED FIREPLACE INSERT
201P	CARPENTER TO DROP ELECTRICAL WIRE THROUGH PORCH CEILING FOR LIGHTS
201S	COLUMN - SEE DETAIL C/7.01
201T	BALLOON FRAME WALL TO UNDERSIDE OF SCISSOR TRUSSES
201X	PROVIDE BLOCKING FOR SHOWER DOOR/ENCLOSURE
201Y	PROVIDE 4-1/2" SHOWER CURB
201Z	22-1/2" x 32" ATTIC ACCESS

Space for Architect Seal

NORTH CAROLINA REGISTERED SEAL 12648 ARCHITECT AMANDA K. SZOKE

The Drees Company
09/09/2025 3:13:42 PM

RESIDENCE FOR:

LOWERY

90 GOLDEN LEAF FARMS ROAD
TOBACCO ROAD

Job Number:	Drawing Date:	Coord Name:	Coord Phone:
TBRD-0038-00	8/22/2025	GREG P.	859-578-4355

House Name: Drawing Scale: 1/8" = 1'0"

Contract Drawn By: EWT

the PARKETTE

Series: EXECUTIVE

Plan No.:

Standard House 3D Model Link:

Born on Date: 07/11/23

CDs Drawn By: CLM

Drees HOMES®

Copyright © 2023 (2023) The Drees Company. All Rights Reserved.
8521 Six Forks Road, Suite 500, Raleigh, NC 27615
Phone: (919) 844-9288

Sheet Information

2.01F

First Floor Framing Plan
Elevation "G"

K:\Contracts\SOUTHEASTERN\EIGHT\TBRD\TBRD-0038-00\TBRD-0038-00.rvt

8/25/2025 10:18:49 AM

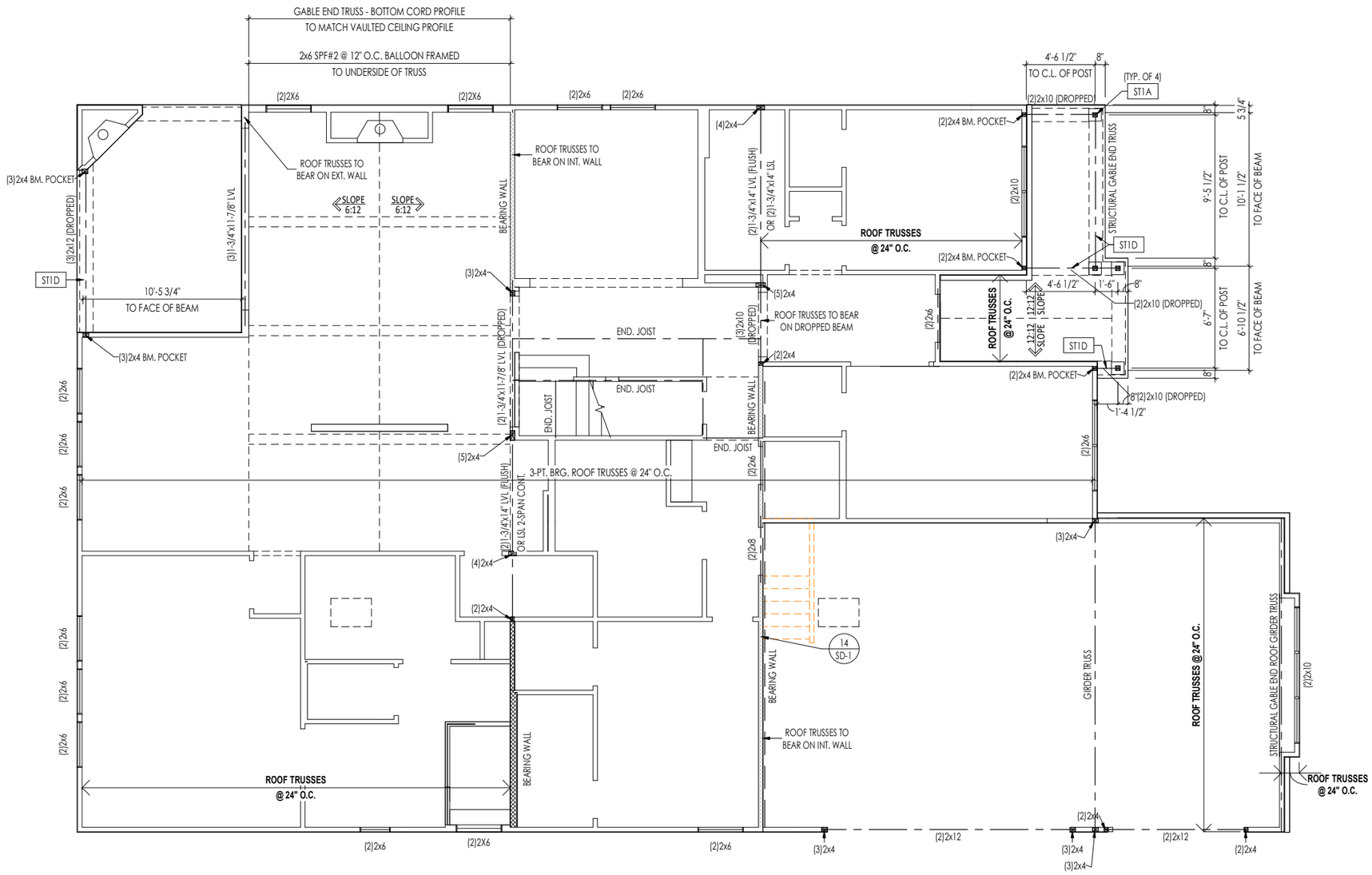

General Notes:

1. REFER TO SHEET 0N.1 FOR GENERAL NOTES.
2. REFER TO SHEET S-0 FOR STRUCTURAL DETAILS AND INFORMATION

Key Notes:

ST1A	4x4 P.T. POST W/ SIMPSON BCS2-2/4 CAP & ABW44Z BASE
ST1D	FRAME TOP OF BEAM AT 10'-1" ABOVE INTERIOR FIRST FLOOR SUBFLOOR/SLAB

Space for Architect Seal

NORTH CAROLINA
REGISTERED
SEAL
12648
ARCHITECT
AMANDA K. SZOKE

The Drees Company
09/09/2025 3:13:42 PM

RESIDENCE FOR:

LOWERY

90 GOLDEN LEAF FARMS ROAD
TOBACCO ROAD

Job Number:	Drawing Date:	Coord Name:	Coord Phone:
TBRD-0038-00	8/22/2025	GREG P.	859-578-4355

House Name: Drawing Scale: 1/8" = 1'0"

Contract Drawn By: EWT

the PARKETTE

Series: EXECUTIVE

Plan No.:

Standard House 3D Model Link:

Born on Date: 07/11/23

CDs Drawn By: CLM

Drees HOMES®

Copyright © 2023 (2023) The Drees Company. All Rights Reserved.
8521 Six Forks Road, Suite 500, Raleigh, NC 27615
Phone: [919] 844-9288

Sheet Information

2.01S

First Floor Structural Plan

Elevation "G"

K:\Contracts\SOUTHEASTRALEIGH\TBRD\TBRD-0038-00\TBRD-0038-00.rvt

8/25/2025 10:18:49 AM

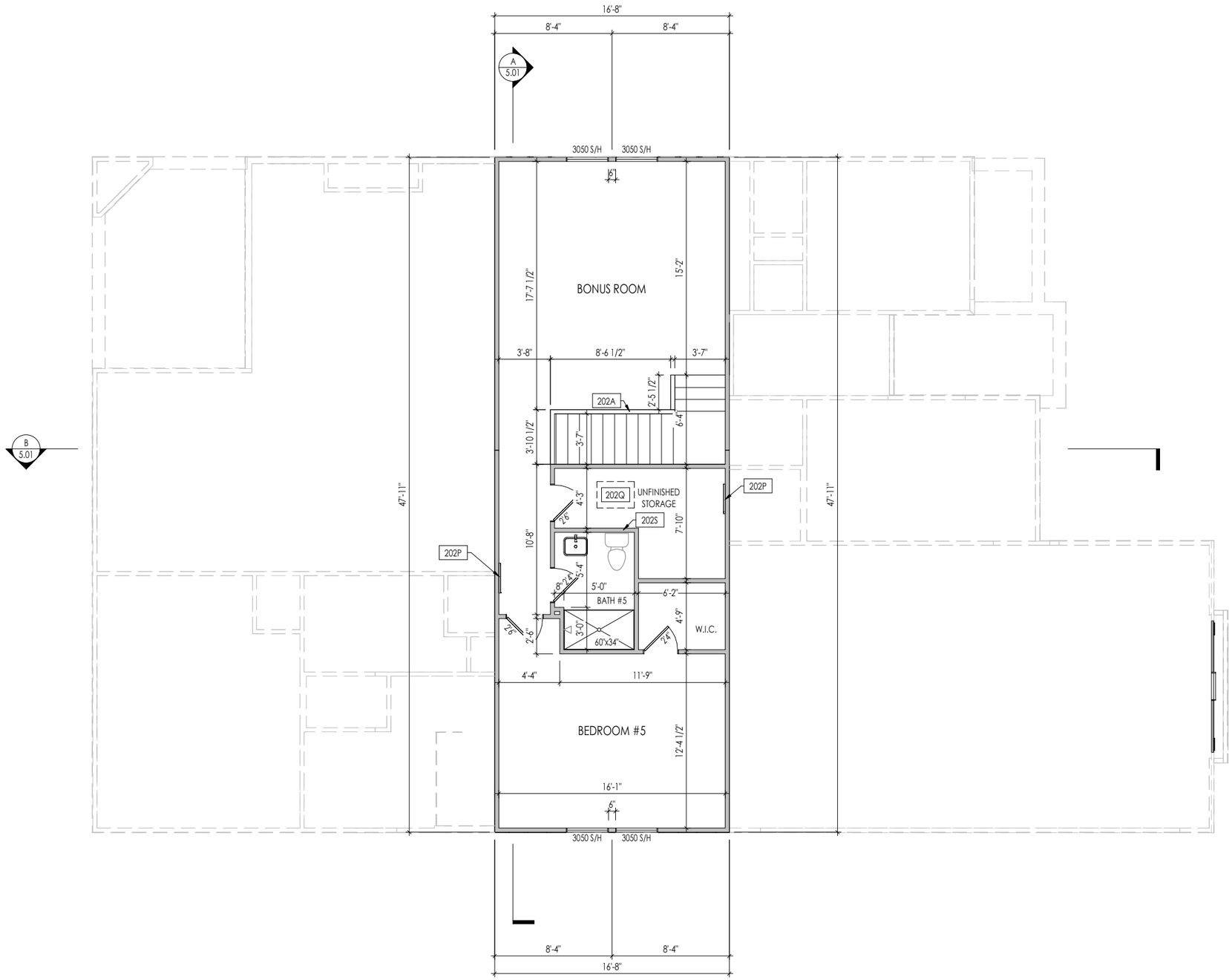

General Notes:

1. REFER TO SHEET 0N.1 FOR GENERAL NOTES.
2. ALL SECOND FLOOR CEILINGS TO BE 9'-1" ABOVE SUBFLOOR UNLESS OTHERWISE NOTED.
3. FRAME TOP OF ALL WINDOWS AT 1'-0-1/4" BELOW TOP OF PLATE UNLESS OTHERWISE NOTED.
4. ALL DROPPED, INTERIOR HEADERS (FALSE AND BEARING) ARE DROPPED 1'-0" FROM CEILING.
5. REFER TO SELECTION SHEETS FOR FLOORING MATERIAL PRIOR TO CONSTRUCTING STAIRS TO DETERMINE RISER HEIGHTS.
6. REFER TO SHEET 2.02S FOR STRUCTURAL INFORMATION.

Key Notes:

202A	36" HIGH WALL
202P	SEE DETAIL N/D2.1 FOR WALL ATTIC ACCESS DETAILS
202Q	22-1/2" x 32" ATTIC ACCESS
202S	DO NOT LOCATE TRUSS ABOVE PLUMBING WALL

Space for Architect Seal

NORTH CAROLINA REGISTERED SEAL 12648 ARCHITECT AMANDA K. SZOKE

The Drees Company
09/09/2025 3:13:43 PM

RESIDENCE FOR:

LOWERY

90 GOLDEN LEAF FARMS ROAD
TOBACCO ROAD

Job Number:	Drawing Date:	Coord Name:	Coord Phone:
TBRD-0038-00	8/22/2025	GREG P.	859-578-4355

House Name: Drawing Scale: 1/8" = 1'0"

the PARKETTE

Contract Drawn By: EWT

Series: EXECUTIVE

Plan No.:

Standard House 3D Model Link:

Born on Date: 07/11/23

CDs Drawn By: CLM

Drees HOMES®

Copyright © 2023 [2023] The Drees Company. All Rights Reserved.
8521 Six Forks Road, Suite 500, Raleigh, NC 27615
Phone: [919] 844-9288

Sheet Information

2.02F

Second Floor Framing Plan
Elevation "G"

K:\Contracts\SOUTHEASTRALEIGH\TBRD\TBRD-0038-00\TBRD-0038-00.rvt

8/26/2025 10:18:49 AM

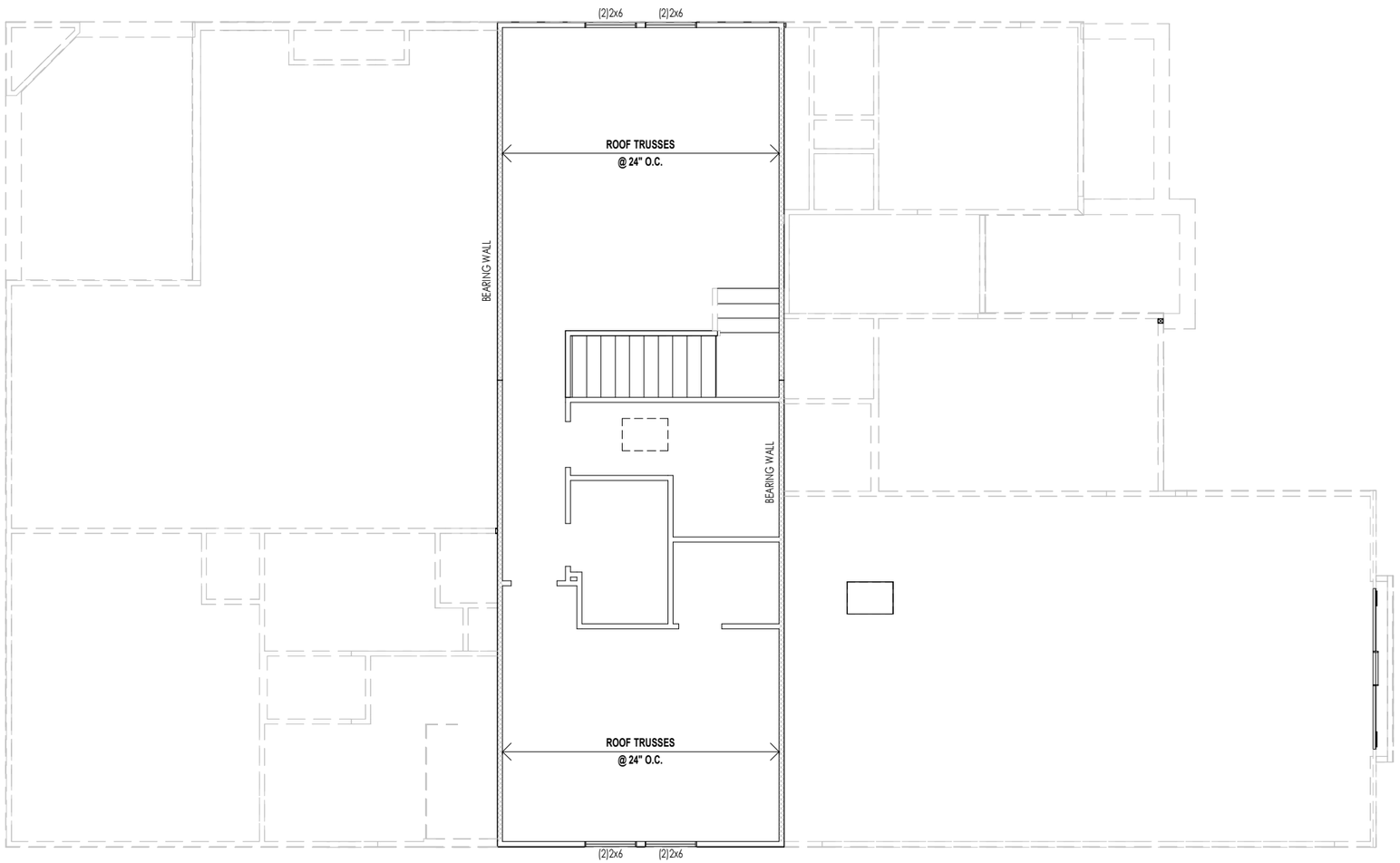

General Notes:

1. REFER TO SHEET 0N.1 FOR GENERAL NOTES.
2. REFER TO SHEET S-0 FOR STRUCTURAL DETAILS AND INFORMATION

Key Notes:

Space for Architect Seal

The Drees Company
09/09/2025 3:13:43 PM

RESIDENCE FOR:

LOWERY

90 GOLDEN LEAF FARMS ROAD
TOBACCO ROAD

Job Number:	Drawing Date:	Coord Name:	Coord Phone:
TBRD-0038-00	8/22/2025	GREG P.	859-578-4355

House Name: Drawing Scale: 1/8" = 1'0"

the PARKETTE

Contract Drawn By: EWT
Series: EXECUTIVE
Plan No.:

Standard House 3D Model Link:

Born on Date: 07/11/23
CDs Drawn By: CLM

Drees HOMES®

Copyright © 2023 (2023) The Drees Company. All Rights Reserved.
8521 Six Forks Road, Suite 500, Raleigh, NC 27615
Phone: (919) 844-9288

Sheet Information

2.02S
Second Floor Structural Plan
Elevation "G"

K:\Contracts\SOUTHEASTERN\EIGHT\TBRD\TBRD-0038-00\TBRD-0038-00.rvt

8/25/2025 10:18:50 AM

HEEL CUT STANDARDS			
		OVERHANG	
		1'-0"	2'-0"
ROOF PITCH	4:12	3-3/4"	7-3/4"
	5:12	4-3/4"	9-3/4"
	6:12	5-3/4"	11-3/4"
	7:12	6-3/4"	13-3/4"
	8:12	7-3/4"	N/A
	9:12	8-3/4"	N/A
	10:12	9-3/4"	N/A
	12:12	11-3/4"	N/A
	14:12	13-3/4"	N/A

ROOF VENTILATION	
CITY/SERIES:	**RALEIGH**
	MAIN HOUSE
TOTAL ATTIC AREA:	3,753
REQUIRED NET FREE VENTILATION (ATTIC AREA/300):	12.51
ACTUAL NET FREE VENTILATION (UPPER + LOWER):	13.03

DOWNSPOUT CALCULATION	
	MAIN HOUSE
TOTAL DRAINABLE ROOF AREA:	4878.9
MINIMUM # OF DOWNSPOUTS:	9

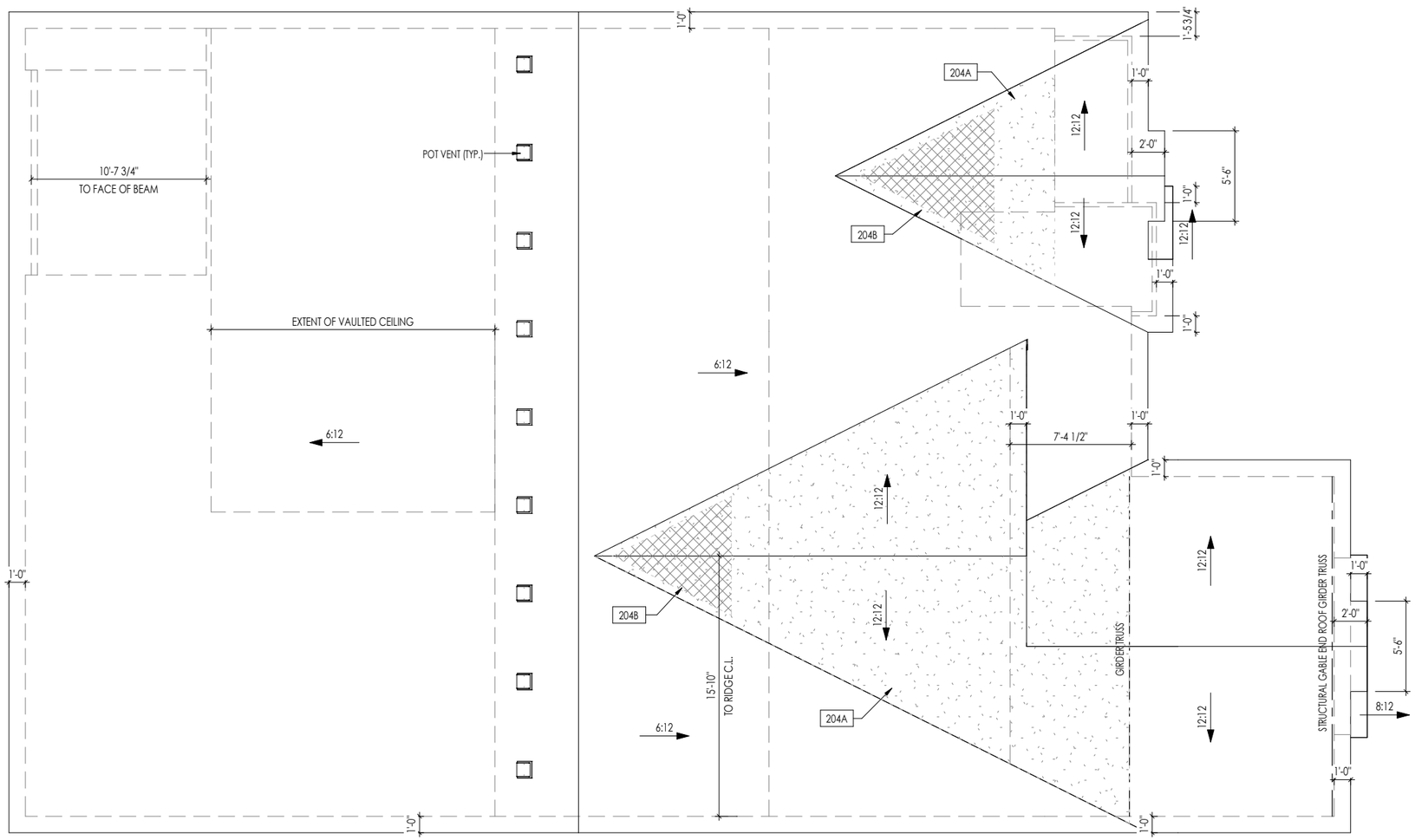

General Notes:

1. REFER TO SHEET 0N.1 FOR GENERAL NOTES.
2. REFER TO SHEET S-0 FOR STRUCTURAL DETAILS AND INFORMATION

Key Notes:

204A	VALLEY TRUSS OVER-FRAMING @ 24" O.C.
204B	NO ROOF DECKING UNDER OVER-FRAMING IN THIS AREA TO ALLOW FOR PROPER ATTIC VENTILATION

Space for Architect Seal

The Drees Company
09/09/2025 3:13:43 PM

RESIDENCE FOR:

LOWERY

90 GOLDEN LEAF FARMS ROAD
TOBACCO ROAD

Job Number:	Drawing Date:	Coord Name:	Coord Phone:
TBRD-0038-00	8/22/2025	GREG P.	859-578-4355

House Name: Drawing Scale: 1/8" = 1'0"

Contract Drawn By: EWT

the PARKETTE

Series: EXECUTIVE

Plan No.:

Standard House 3D Model Link:

Born on Date: 07/11/23

CDs Drawn By: CLM

Drees HOMES®

Copyright © 2023 [2023] The Drees Company. All Rights Reserved.
8521 Six Forks Road, Suite 500, Raleigh, NC 27615
Phone: (919) 844-9288

Sheet Information

2.04
Roof Plan
Elevation "G"

K:\Contracts\SOUTHEASTERN\EIGHT\TBRD\TBRD-0038-00\TBRD-0038-00.rvt

09/09/2025 10:18:50 AM

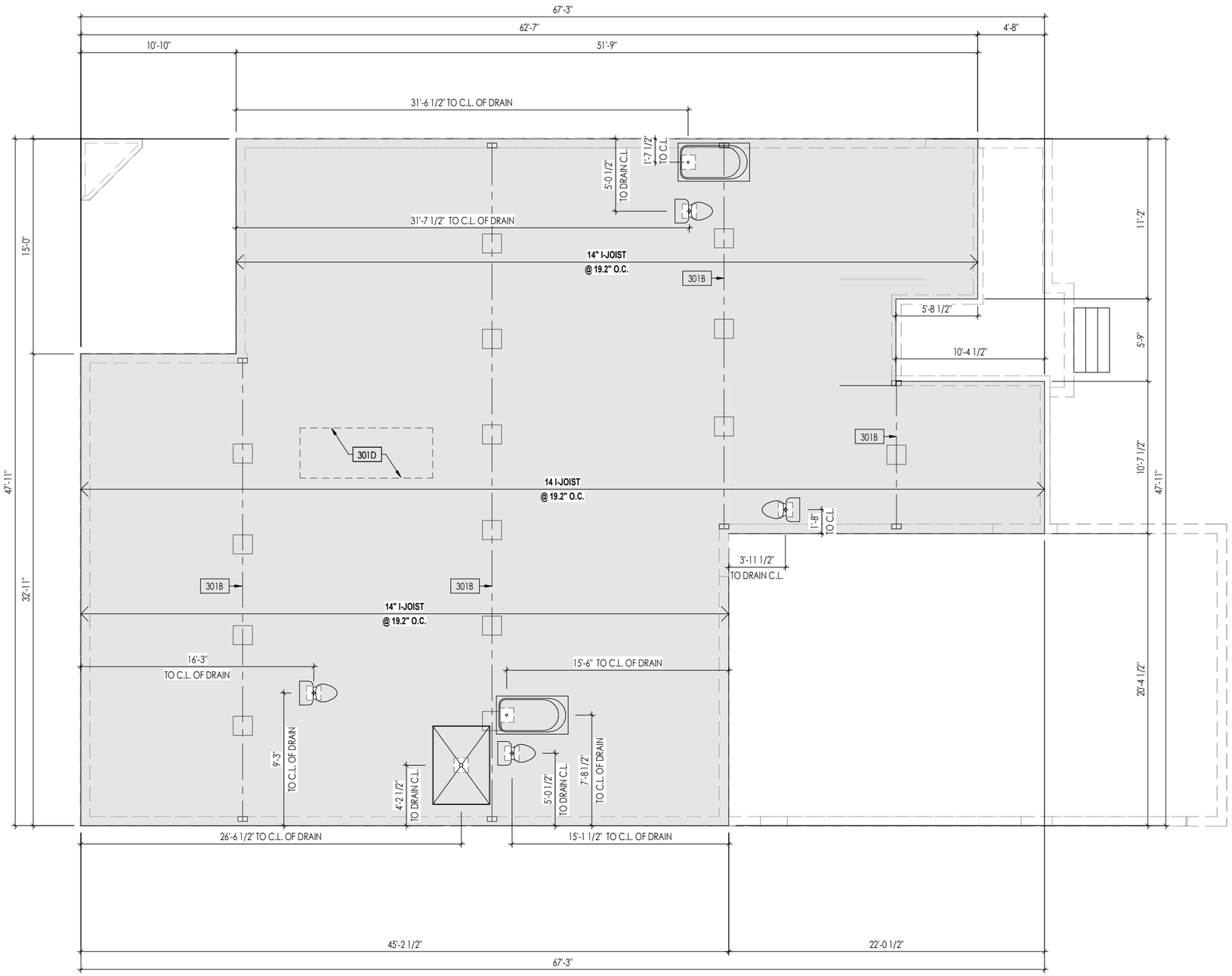

General Notes:

1. REFER TO SHEET 0N.1 FOR GENERAL NOTES.
2. FLOOR JOISTS DESIGNED FOR 14" TJI 210 SERIES, OR EQUAL, @ 19.2" O.C., UNLESS OTHERWISE NOTED.
3. JOISTS ARE NOT TO BE PLACE DIRECTLY OVER INTERIOR PARALLEL WALL. (TO PREVENT UNEVEN FLOOR DEFLECTION FROM OCCURRING)
4. ADD'L JOISTS MAY BE LOCATED UP TO 2" AWAY FROM THE PARTITION WALL ABOVE IN CASES WHERE MECHANICAL PENETRATIONS
5. REFER TO SHEET S-0 FOR STRUCTURAL DETAILS AND INFORMATION

Key Notes:

301B	BEAM BELOW - SEE FOUNDATION PLAN FOR MORE INFO
301D	OUTLINE OF KITCHEN ISLAND ABOVE - DOUBLE EVERY OTHER JOIST IN THIS AREA (MIN. 2 INSTANCES)

Space for Architect Seal

NORTH CAROLINA REGISTERED SEAL 12648 ARCHITECT AMANDA K. SZOKE

The Drees Company
09/09/2025 3:13:43 PM

RESIDENCE FOR:

LOWERY

90 GOLDEN LEAF FARMS ROAD
TOBACCO ROAD

Job Number:	Drawing Date:	Coord Name:	Coord Phone:
TBRD-0038-00	8/22/2025	GREG P.	859-578-4355

House Name: Drawing Scale: 1/8" = 1'0"

the PARKETTE

Contract Drawn By: EWT

Series: EXECUTIVE

Plan No.:

Standard House 3D Model Link:

Born on Date: 07/11/23

CDs Drawn By: CLM

Drees HOMES®

Copyright © 2023 [2023] The Drees Company, All Rights Reserved.
8521 Six Forks Road, Suite 500, Raleigh, NC 27615
Phone: [919] 844-9288

Sheet Information

3.01

First Floor Subfloor Plan
Elevation "G"

K:\Contracts\SOUTHEASTERN\EIGHT\TBRD\TBRD-0038-00\TBRD-0038-00.rvt

09/09/2025 10:18:50 AM

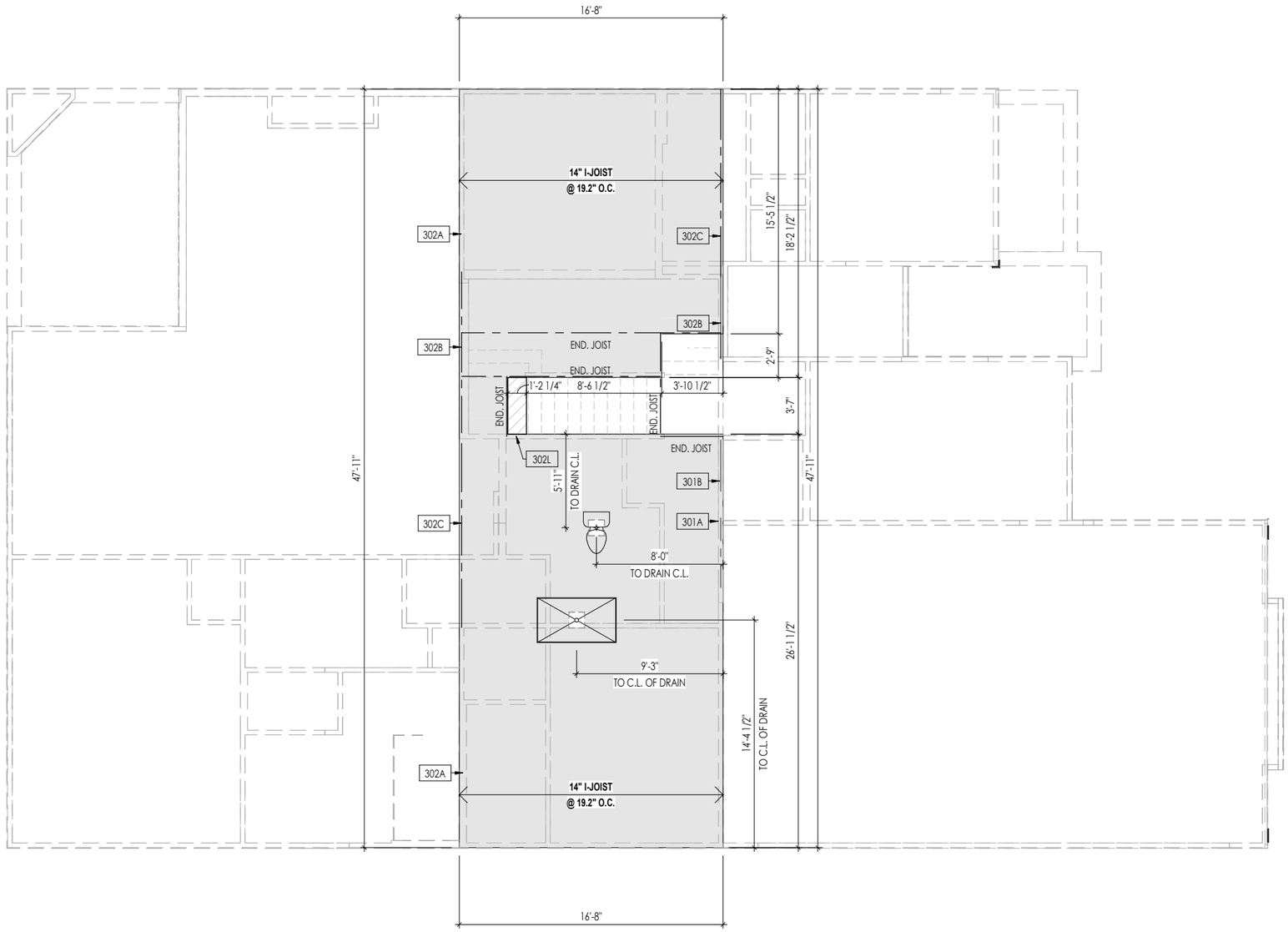

General Notes:

1. REFER TO SHEET 0N.1 FOR GENERAL NOTES.
2. FLOOR JOISTS TO BE 14" TJI 210 SERIES, OR EQUAL, @ 19.2" O.C., UNLESS OTHERWISE NOTED.
3. JOISTS ARE NOT TO BE PLACE DIRECTLY OVER INTERIOR PARALLEL WALL. (TO PREVENT UNEVEN FLOOR DEFLECTION FROM OCCURRING)
4. ADD'L JOISTS MAY BE LOCATED UP TO 2" AWAY FROM THE PARTITION WALL ABOVE IN CASES WHERE MECHANICAL PENETRATIONS
5. REFER TO SHEET S-0 FOR STRUCTURAL DETAILS AND INFORMATION

Key Notes:

302A	BEARING WALL BELOW
302B	BEAM BELOW - SEE SHEET 2.01S FOR MORE INFO
302C	FLUSH BEAM - SEE SHEET 2.01S FOR MORE INFO
302L	2x12 FLAT FRAME (TOP FLUSH) FOR HEADROOM OVER STAIRS - FASTEN TO LVL EA. END W/ SIMPSON A21 CLIPS (4 TOTAL) - SEE STAIR DETAIL

Space for Architect Seal

NORTH CAROLINA REGISTERED SEAL 12648 ARCHITECT AMANDA K. SZOKE

The Drees Company
09/09/2025 3:13:43 PM

RESIDENCE FOR:

LOWERY

90 GOLDEN LEAF FARMS ROAD
TOBACCO ROAD

Job Number:	Drawing Date:	Coord Name:	Coord Phone:
TBRD-0038-00	8/22/2025	GREG P.	859-578-4355

House Name: Drawing Scale: 1/8" = 1'0"

Contract Drawn By: EWT

the PARKETTE

Series: EXECUTIVE

Plan No.:

Standard House 3D Model Link:

Born on Date: 07/11/23

CDs Drawn By: CLM

Drees HOMES®

Copyright © 2023 (2023) The Drees Company, All Rights Reserved.
8521 Six Forks Road, Suite 500, Raleigh, NC 27615
Phone: (919) 844-9288

Sheet Information

3.02

Second Floor Subfloor Plan
Elevation "G"

K:\Contracts\SOUTHEASTERN EIGHT\TBRD\TBRD-0038-00\TBRD-0038-00.rvt

8/25/2025 10:18:50 AM

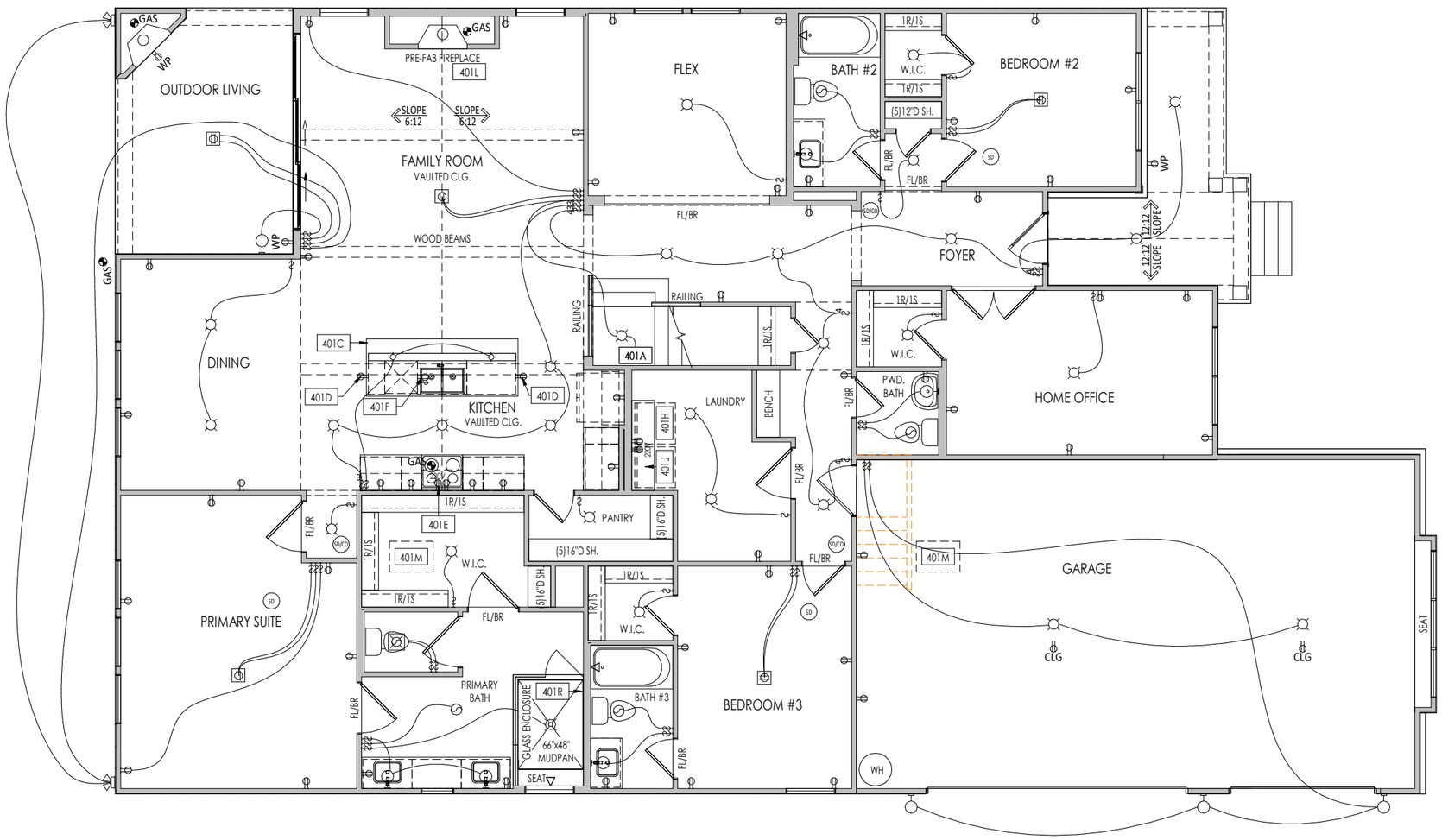

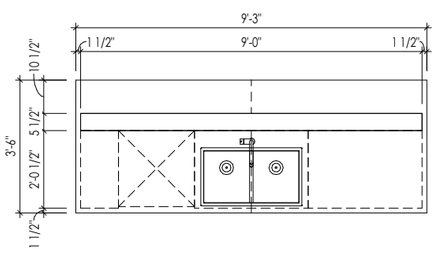

A 4.01 KITCHEN ISLAND DETAIL
1/4" = 1'-0"

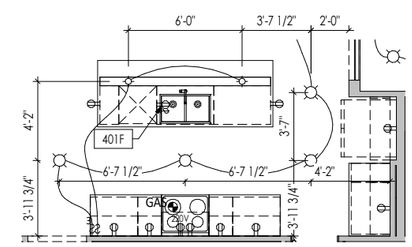

B 4.01 KITCHEN LIGHTING DETAIL
1/8" = 1'-0"

General Notes:

1. REFER TO SHEET 0N.1 FOR GENERAL NOTES.

Key Notes:

401A	TO SWITCH OR LIGHT ABOVE
401C	SEE DETAIL A/4.01 FOR KITCHEN ISLAND COUNTERTOP DIMENSIONS
401D	HOLD OUTLET HIGH ON ISLAND
401E	OUTLET FOR RANGE HOOD/MICROWAVE HELD HIGH - VENT TO EXTERIOR
401F	OUTLET FOR DISHWASHER LOCATED IN SINK CABINET
401H	LOCATE WASHER TO LEFT OF DRYER
401J	UPPER WALL CABINETS OR 16" DEEP x 5'-6" LONG SHELF HELD AT 5'-7" A.F.F. - REFER TO SELECTIONS
401L	PRE-FABRICATED FIREPLACE INSERT
401M	22-1/2" x 32" ATTIC ACCESS PANEL IN CEILING
401R	LOCATE SHOWER CONTROLS HERE

MECHANICAL LEGEND

- WALL OUTLET
- WEATHERPROOF GFCI OUTLET
- 220 VOLT OUTLET
- GFCI OUTLET
- FLOOR OUTLET
- COUNTER POP-UP OUTLET
- SINGLE POLE SWITCH
- 3-WAY SWITCH
- 4-WAY SWITCH
- STAIR LIGHT
- BLOCK, MOUNT, & SWITCH FOR FUTURE FAN/LIGHT COMBINATION (CENTER, UNLESS OTHERWISE NOTED)
- CLG. MOUNTED LIGHT FIXT.
- SURFACE MOUNT DISC LIGHT OR RECESSED CEILING LIGHT, PER SPECS.
- WALL MOUNTED LIGHT FIXT.
- DOUBLE SPOTLIGHT FIXT.
- DIRECTIONAL CAN LIGHT
- PIN LIGHT
- WALL SCONCE @ 5'-6" A.F.F.
- FLUORESCENT LIGHT
- UNDER CABINET LIGHTING
- HOSE BIB
- SHOWER HEAD
- GAS HOOK UP
- FLOOR DRAIN
- SMOKE DETECTOR
- SMOKE DETECTOR/ CO DETECTOR COMBINATION
- EXHAUST FAN AND LIGHT COMBINATION
- CLG. MTD. EXHAUST FAN
- DATA JACK
- CABLE TELEVISION JACK

Space for Architect Seal

NORTH CAROLINA REGISTERED SEAL 12648 ARCHITECT AMANDA K. SZOKE

The Drees Company
09/09/2025 3:13:43 PM

RESIDENCE FOR:

LOWERY

90 GOLDEN LEAF FARMS ROAD
TOBACCO ROAD

Job Number:	Drawing Date:	Coord Name:	Coord Phone:
TBRD-0038-00	8/22/2025	GREG P.	859-578-4355

House Name: Drawing Scale: 1/8" = 1'0"

Contract Drawn By: EWT

the PARKETTE

Series: EXECUTIVE

Plan No.:

Standard House 3D Model Link:

Born on Date: 07/11/23

CDs Drawn By: CLM

Drees HOMES®

Copyright © 2023 [2023] The Drees Company. All Rights Reserved.
8521 Six Forks Road, Suite 500, Raleigh, NC 27615
Phone: [919] 844-9288

Sheet Information

4.01

First Floor Mechanical Plan
Elevation "G"

J:\Contracts\SOUTHEASTRALEIGH\TBRD\TBRD-0038-00\TBRD-0038-00.r4

8/25/2025 10:18:51 AM

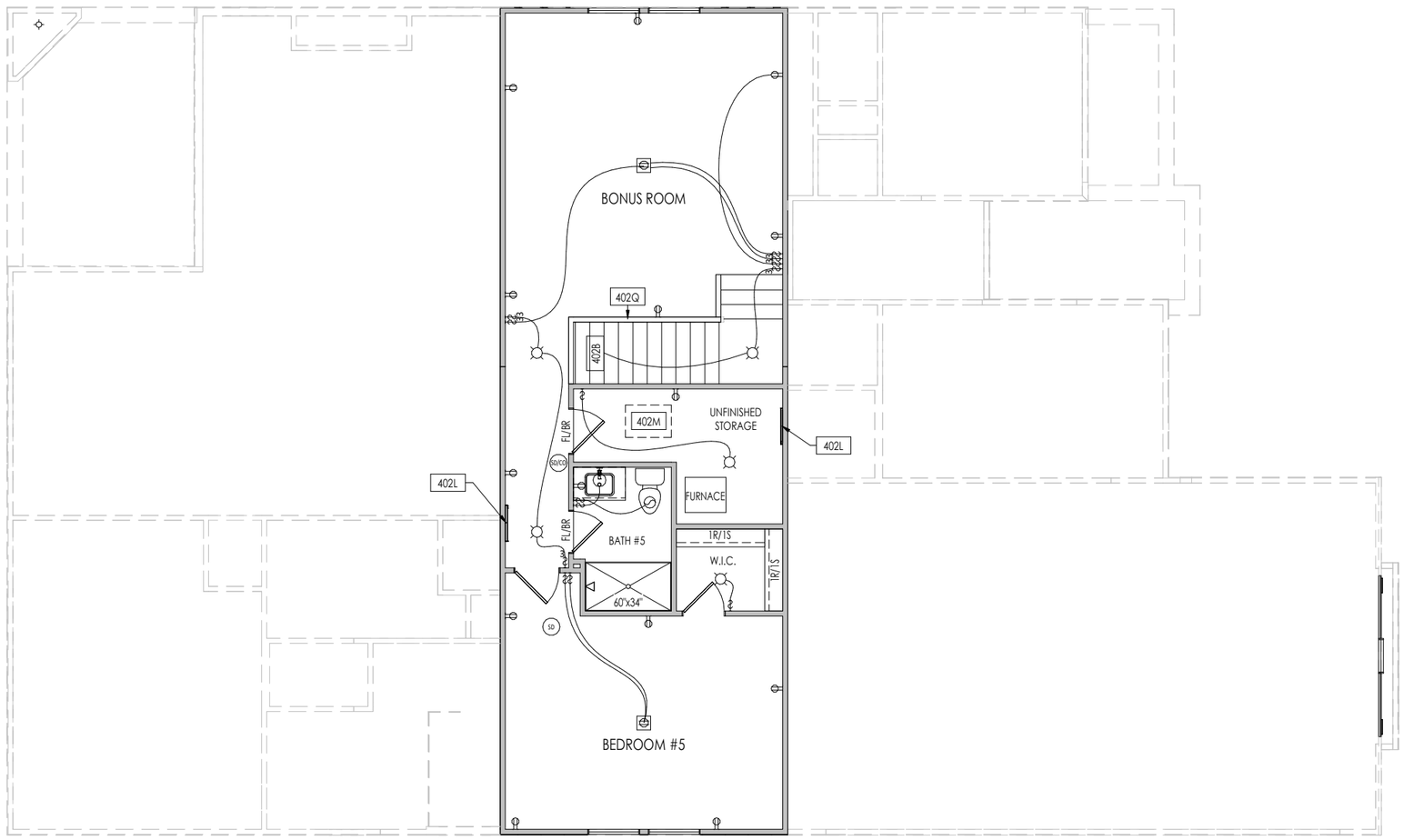

General Notes:

1. REFER TO SHEET 0N.1 FOR GENERAL NOTES.

Key Notes:

402B	TO SWITCH OR LIGHT BELOW
402L	WALL ATTIC ACCESS. SEE DETAIL N/D2.1
402M	22-1/2" x 32" ATTIC ACCESS PANEL IN CEILING
402Q	36" HIGH WALL W/ WOOD CAP

MECHANICAL LEGEND

- WALL OUTLET
- WP WEATHERPROOF GFCI OUTLET
- 220 220 VOLT OUTLET
- GFCI GFCI OUTLET
- FLOOR OUTLET
- COUNTER POP-UP OUTLET
- SINGLE POLE SWITCH
- 3 3-WAY SWITCH
- 4 4-WAY SWITCH
- STAIR LIGHT
- BLOCK, MOUNT, & SWITCH FOR FUTURE FAN/LIGHT COMBINATION (CENTER, UNLESS OTHERWISE NOTED)
- CLG. MOUNTED LIGHT FIXT.
- SURFACE MOUNT DISC LIGHT OR RECESSED CEILING LIGHT, PER SPECS.
- WALL MOUNTED LIGHT FIXT.
- DOUBLE SPOTLIGHT FIXT.
- DIRECTIONAL CAN LIGHT
- PIN LIGHT
- WALL SCONCE @ 5'-6" A.F.F.
- FLUORESCENT LIGHT
- UNDER CABINET LIGHTING
- HOSE BIB
- SHOWER HEAD
- GAS GAS HOOK UP
- FLOOR DRAIN
- SD SMOKE DETECTOR
- SD CO SMOKE DETECTOR/ CO DETECTOR COMBINATION
- EXHAUST FAN AND LIGHT COMBINATION
- CLG. MTD. EXHAUST FAN
- DATA JACK
- TV CABLE TELEVISION JACK

Space for Architect Seal

NORTH CAROLINA REGISTERED SEAL 12648 ARCHITECT AMANDA K. SZOKE

The Drees Company
09/09/2025 3:13:43 PM

RESIDENCE FOR:

LOWERY

90 GOLDEN LEAF FARMS ROAD
TOBACCO ROAD

Job Number:	Drawing Date:	Coord Name:	Coord Phone:
TBRD-0038-00	8/22/2025	GREG P.	859-578-4355

House Name: Drawing Scale: 1/8" = 1'0"

the PARKETTE

Contract Drawn By: EWT

Series: EXECUTIVE

Plan No.:

Standard House 3D Model Link:

Born on Date: 07/11/23

CDs Drawn By: CLM

Drees HOMES®

Copyright © 2023 (2023) The Drees Company. All Rights Reserved.
8521 Six Forks Road, Suite 500, Raleigh, NC 27615
Phone: [919] 844-9288

Sheet Information

4.02

Second Floor Mechanical Plan
Elevation "G"

K:\Contracts\SOUTHEASTRALEIGH\TBRD\TBRD-0038-00\TBRD-0038-00.rvt

8/25/2025 10:18:51 AM

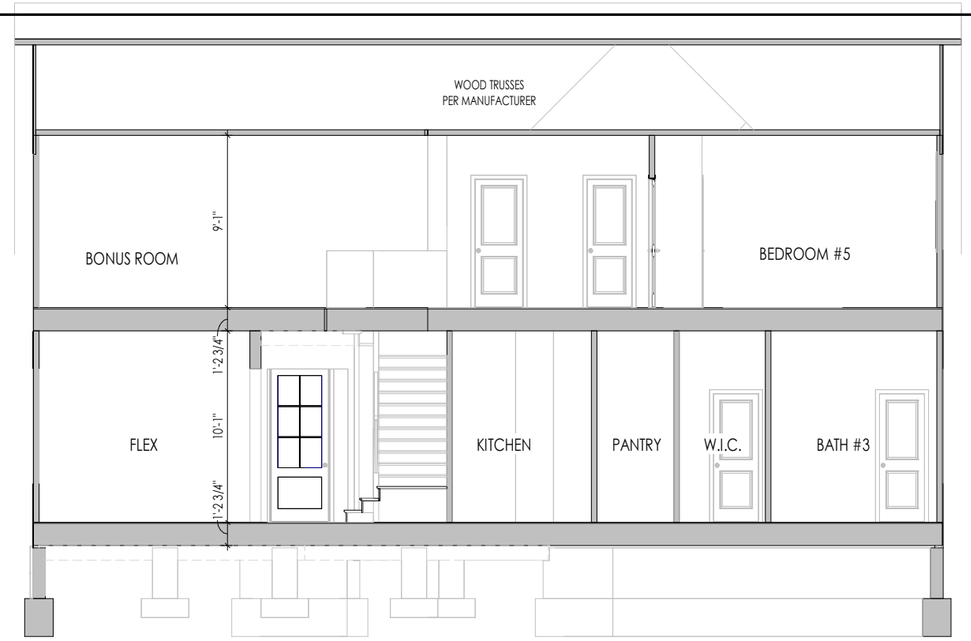

A 5.01 BUILDING SECTION THRU FAMILY ROOM
1/8" = 1'-0"

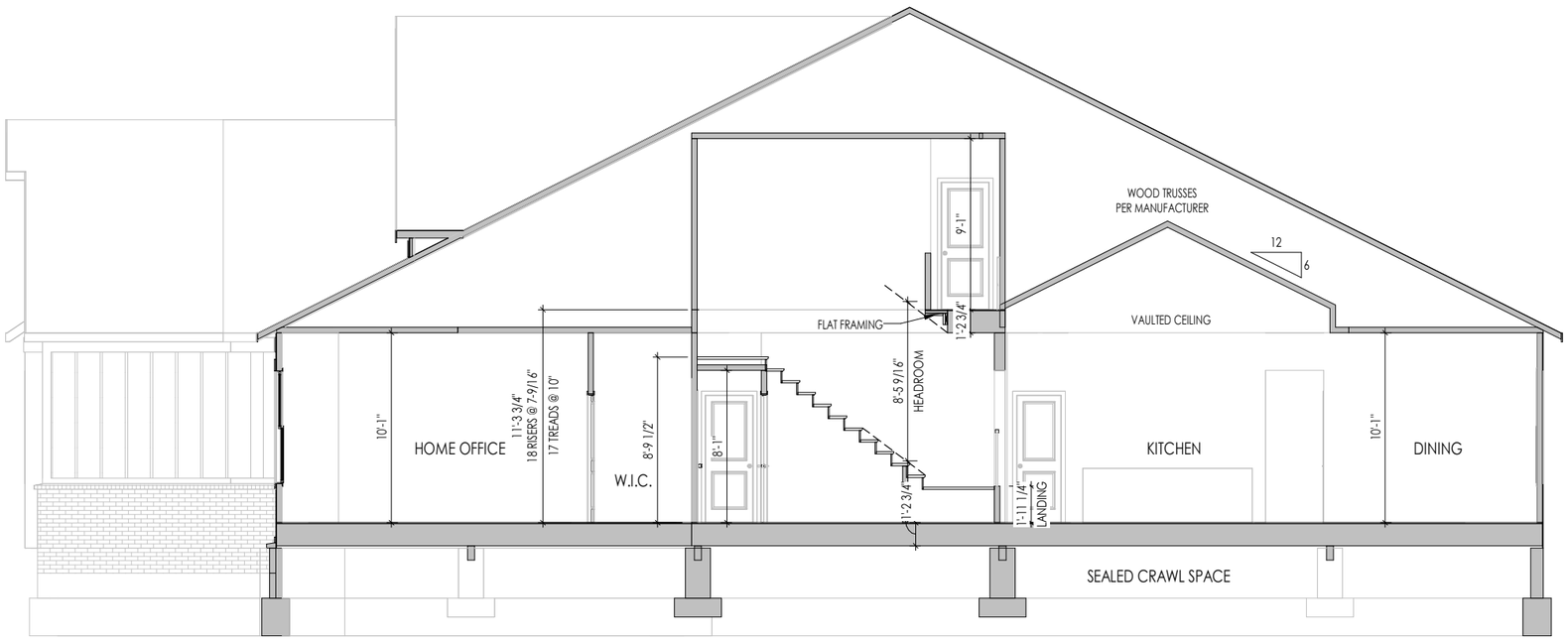

B 5.01 BUILDING SECTION THRU GARAGE
1/8" = 1'-0"

General Notes:

1. REFER TO SHEET 0N.1 FOR GENERAL NOTES.
2. REFER TO SHEET S-0 FOR STRUCTURAL DETAILS AND INFORMATION

Key Notes:

Space for Architect Seal

The Drees Company
09/09/2025 3:13:43 PM

RESIDENCE FOR:

LOWERY

90 GOLDEN LEAF FARMS ROAD
TOBACCO ROAD

Job Number:	Drawing Date:	Coord Name:	Coord Phone:
TBRD-0038-00	8/22/2025	GREG P.	859-578-4355

House Name: Drawing Scale: 1/8" = 1'0"

the PARKETTE

Contract Drawn By: EWT

Series: EXECUTIVE

Plan No.:

Standard House 3D Model Link:

Born on Date: 07/11/23

CDs Drawn By: CLM

Drees HOMES®

Copyright © 2023 (2023) The Drees Company. All Rights Reserved.
8521 Six Forks Road, Suite 500, Raleigh, NC 27615
Phone: (919) 844-9288

Sheet Information

5.01
Building Section
Elevation "G"

K:\Contracts\SOUTHEASTRALEIGH\TBRD\TBRD-0038-00\TBRD-0038-00.rvt

8/25/2025 10:18:51 AM

TYPICAL TRIM:
6" FASCIA (ALL SIDES)
8" FRIEZE (FRONT ONLY, UNLESS OTHERWISE NOTED)

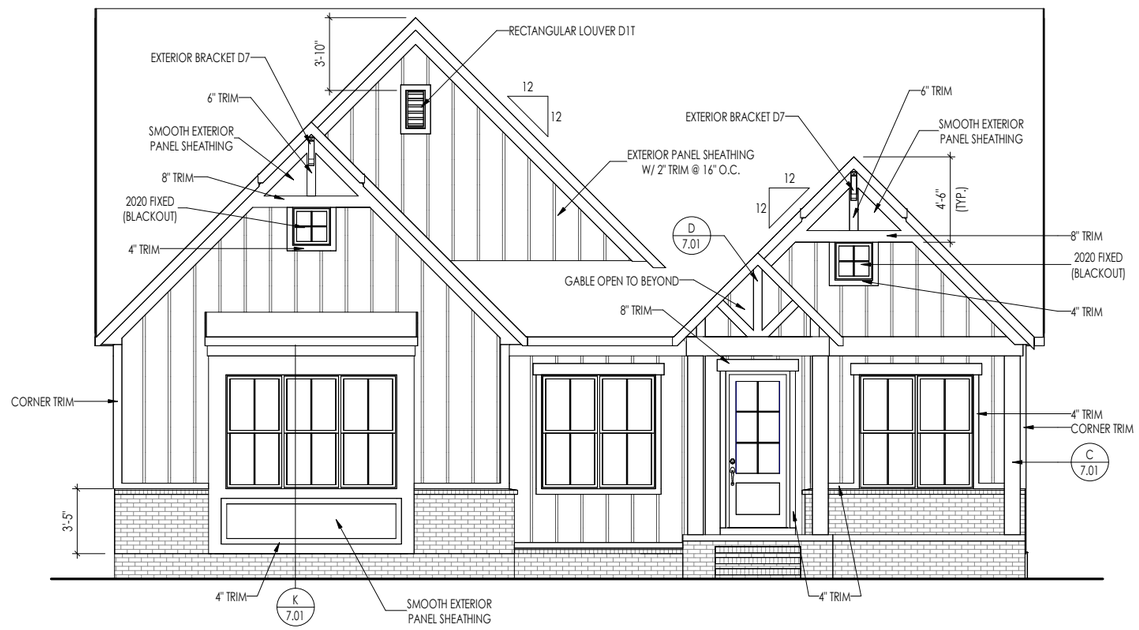

General Notes:

1. REFER TO SHEET 0N.1 FOR GENERAL NOTES.
2. ROOFING MATERIAL PER SELECTIONS.
3. CONTACT M&K ENGINEERING FOR HEADER SIZE/BRICK SUPPORT IF GRADE DROPS AND THE AMOUNT OF BRICK OVER GARAGE DOOR SHOWN ON CURRENT ELEVATION IS NO LONGER ACCURATE
4. REFER TO SHEET S-0 FOR STRUCTURAL DETAILS AND INFORMATION

Key Notes:

Space for Architect Seal

The Drees Company
09/09/2025 3:13:43 PM

RESIDENCE FOR:

LOWERY

90 GOLDEN LEAF FARMS ROAD
TOBACCO ROAD

Job Number:	Drawing Date:	Coord Name:	Coord Phone:
TBRD-0038-00	8/22/2025	GREG P.	859-578-4355

House Name: Drawing Scale: 1/8" = 1'0"

the PARKETTE

Contract Drawn By: EWT

Series: EXECUTIVE

Plan No.:

Standard House 3D Model Link:

Born on Date: 07/11/23

CDs Drawn By: CLM

Drees HOMES®

Copyright © 2023 (2023) The Drees Company. All Rights Reserved.

8521 Six Forks Road, Suite 500, Raleigh, NC 27615
Phone: (919) 844-9288

Sheet Information

6.01

Front Elevation

Elevation "G"

K:\Contracts\SOUTHEASTRALEIGH\TBRD\TBRD-0038-00\TBRD-0038-00.rvt

8/25/2025 10:18:51 AM

TYPICAL TRIM:
6" FASCIA (ALL SIDES)
8" FRIEZE (FRONT ONLY, UNLESS OTHERWISE NOTED)

General Notes:

1. REFER TO SHEET 0N.1 FOR GENERAL NOTES.
2. ROOFING MATERIAL PER SELECTIONS.
3. REFER TO LINTEL SCHEDULE AS NEEDED ON SHEET 6.01.
4. REFER TO SHEET S-0 FOR STRUCTURAL DETAILS AND INFORMATION

Key Notes:

Space for Architect Seal

NORTH CAROLINA
REGISTERED
SEAL
12648
ARCHITECT
AMANDA K. SZOKE

The Drees Company
09/09/2025 3:13:43 PM

RESIDENCE FOR:

LOWERY

90 GOLDEN LEAF FARMS ROAD
TOBACCO ROAD

Job Number:	Drawing Date:	Coord Name:	Coord Phone:
TBRD-0038-00	8/22/2025	GREG P.	859-578-4355

House Name: Drawing Scale: 1/8" = 1'0"

the PARKETTE

Contract Drawn By: EWT

Series: EXECUTIVE

Plan No.:

Standard House 3D Model Link:

Born on Date: 07/11/23

CDs Drawn By: CLM

Drees HOMES®

Copyright © 2023 (2023) The Drees Company. All Rights Reserved.
8521 Six Forks Road, Suite 500, Raleigh, NC 27615
Phone: [919] 844-9288

Sheet Information

6.02

Garage Side Elevation

Elevation "G"

K:\Contracts\SOUTHEASTRALEIGH\TBRD\TBRD-0038-00\TBRD-0038-00.rvt

8/25/2025 10:18:52 AM

TYPICAL TRIM:
6" FASCIA (ALL SIDES)
8" FRIEZE (FRONT ONLY, UNLESS OTHERWISE NOTED)

General Notes:

1. REFER TO SHEET 0N.1 FOR GENERAL NOTES.
2. ROOFING MATERIAL PER SELECTIONS.
3. REFER TO LINTEL SCHEDULE AS NEEDED ON SHEET 6.01.
4. REFER TO SHEET S-0 FOR STRUCTURAL DETAILS AND INFORMATION

Key Notes:

Space for Architect Seal

The Drees Company
09/09/2025 3:13:44 PM

RESIDENCE FOR:

LOWERY

90 GOLDEN LEAF FARMS ROAD
TOBACCO ROAD

Job Number:	Drawing Date:	Coord Name:	Coord Phone:
TBRD-0038-00	8/22/2025	GREG P.	859-578-4355

House Name: Drawing Scale: 1/8" = 1'0"

the PARKETTE

Contract Drawn By: EWT

Series: EXECUTIVE

Plan No.:

Standard House 3D Model Link:

Born on Date: 07/11/23

CDs Drawn By: CLM

Drees HOMES®

Copyright © 2023 (2023) The Drees Company. All Rights Reserved.
8521 Six Forks Road, Suite 500, Raleigh, NC 27615
Phone: [919] 844-9288

Sheet Information

6.03
Rear Elevation
Elevation "G"

K:\Contracts\SOUTHEASTRALEIGH\TBRD\TBRD-0038-00\TBRD-0038-00.rvt

8/25/2025 10:18:52 AM

TYPICAL TRIM:
6" FASCIA (ALL SIDES)
8" FRIEZE (FRONT ONLY, UNLESS OTHERWISE NOTED)

General Notes:

1. REFER TO SHEET 0N.1 FOR GENERAL NOTES.
2. ROOFING MATERIAL PER SELECTIONS.
3. REFER TO LINTEL SCHEDULE AS NEEDED ON SHEET 6.01.
4. REFER TO SHEET S-0 FOR STRUCTURAL DETAILS AND INFORMATION

Key Notes:

Space for Architect Seal

NORTH CAROLINA
REGISTERED
SEAL
12648
ARCHITECT
AMANDA K. SZOKE

The Drees Company
09/09/2025 3:13:44 PM

RESIDENCE FOR:

LOWERY

90 GOLDEN LEAF FARMS ROAD
TOBACCO ROAD

Job Number:	Drawing Date:	Coord Name:	Coord Phone:
TBRD-0038-00	8/22/2025	GREG P.	859-578-4355

House Name: Drawing Scale: 1/8" = 1'0"

the PARKETTE

Contract Drawn By: EWT

Series: EXECUTIVE

Plan No.:

Standard House 3D Model Link:

Born on Date: 07/11/23

CDs Drawn By: CLM

Drees HOMES®

Copyright © 2023 (2023) The Drees Company. All Rights Reserved.
8521 Six Forks Road, Suite 500, Raleigh, NC 27615
Phone: [919] 844-9288

Sheet Information

6.04
Side Elevation
Elevation "G"

K:\Contracts\SOUTHEASTRALEIGH\TBRD\TBRD-0038-00\TBRD-0038-00.rvt

8/25/2025 10:18:52 AM

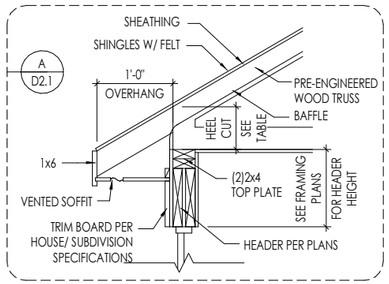

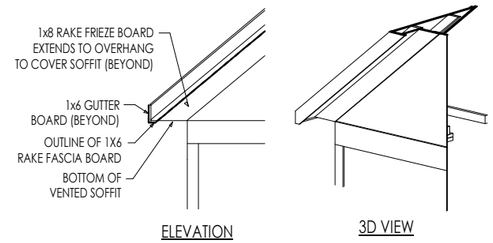

B 7.01 RAFTER TAIL DETAIL

SCALE: 1/4" = 1'-0"

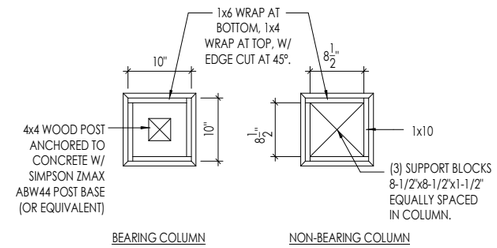

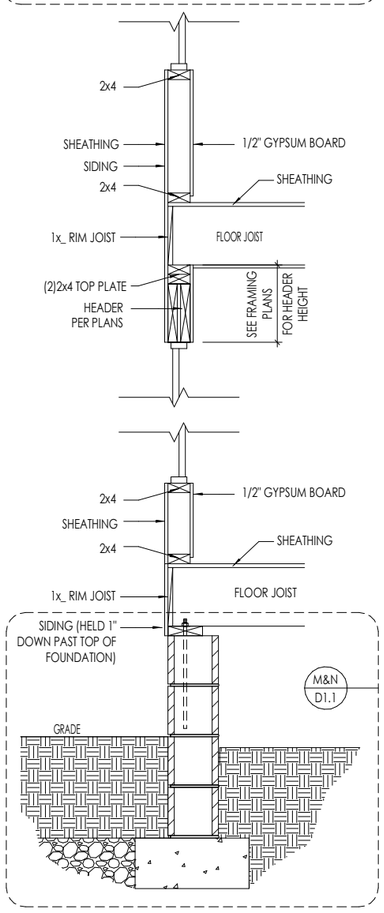

A 7.01 TYPICAL WALL SECTIONS

SCALE: 1/2" = 1'-0"

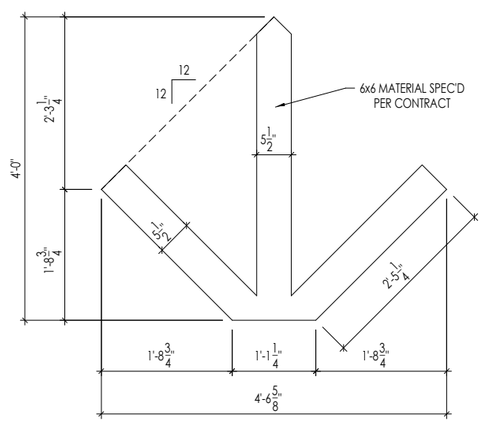

D 7.02 GABLE TRIM DETAIL

SCALE: 1/2" = 1'-0"

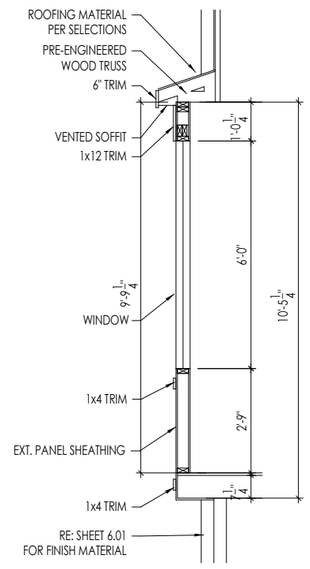

K 7.01 BAY WINDOW DETAIL

SCALE: 1/4 = 1'-0"

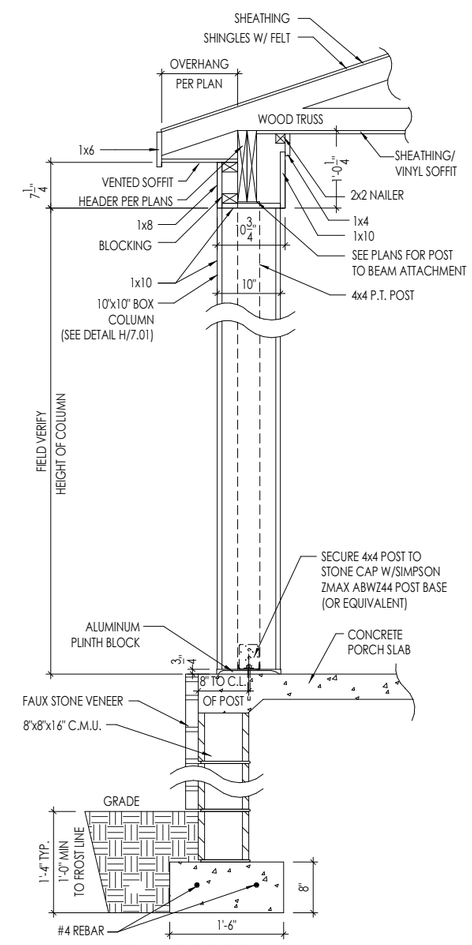

C 7.01 FRONT PORCH COLUMN

SCALE: 1/2" = 1'-0"

Space for Architect Seal

The Drees Company
09/09/2025 3:13:44 PM

RESIDENCE FOR:

LOWERY

90 GOLDEN LEAF FARMS ROAD
TOBACCO ROAD

Job Number:	Drawing Date:	Coord Name:	Coord Phone:
TBRD-0038-00	8/22/2025	GREG P.	859-578-4355

House Name: Drawing Scale: 1/8" = 1'0"

Contract Drawn By: EWT

the PARKETTE

Series: EXECUTIVE

Plan No.:

Standard House 3D Model Link:

Born on Date: 07/11/23

CDs Drawn By: CLM

Drees HOMES®

Copyright © 2023 (2023) The Drees Company. All Rights Reserved.
8521 Six Forks Road, Suite 500, Raleigh, NC 27615
Phone: (919) 844-9288

Sheet Information

7.01

House Specific Details

Elevation "G"

K:\Contracts\SOUTHEASTERN\EIGHT\TBRD\TBRD-0038-00\TBRD-0038-00.rvt

8/25/2025 10:18:52 AM

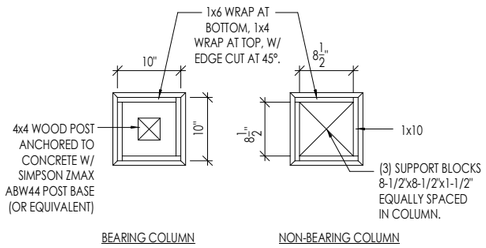

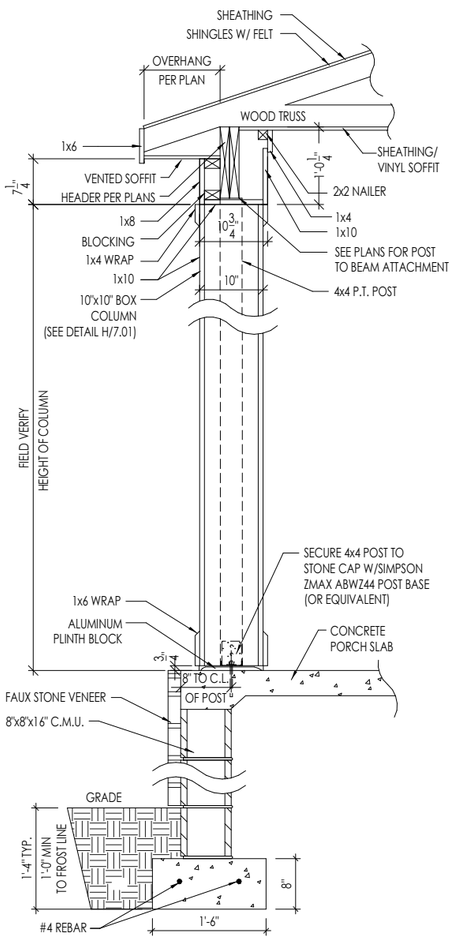

A 7.01 FRONT PORCH COLUMN
SCALE: 1/2" = 1'-0"

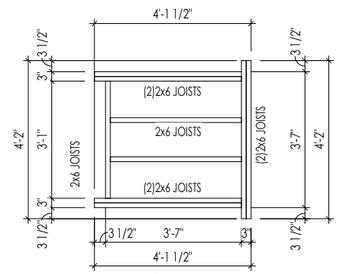

A LANDING DETAIL A
1/4" = 1'-0"

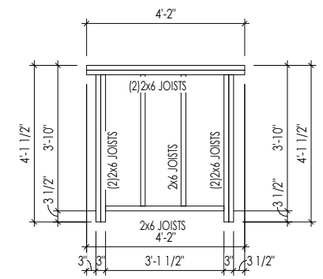

B LANDING DETAIL B
1/4" = 1'-0"

SEE STAIR SECTION B/5.01 FOR RISER HEIGHTS

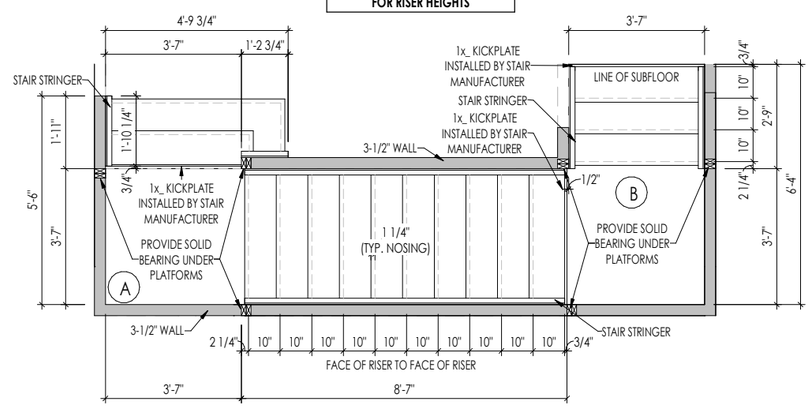

C 7.02 2ND FLOOR STAIR DETAIL
1/4" = 1'-0"

Space for Architect Seal

The Drees Company
09/09/2025 3:13:44 PM

RESIDENCE FOR:

LOWERY

90 GOLDEN LEAF FARMS ROAD
TOBACCO ROAD

Job Number:	Drawing Date:	Coord Name:	Coord Phone:
TBRD-0038-00	8/22/2025	GREG P.	859-578-4355

House Name: Drawing Scale: 1/8" = 1'0"

the PARKETTE

Contract Drawn By: EWT
Series: EXECUTIVE
Plan No.:

Standard House 3D Model Link:

Drees HOMES®

Born on Date: 07/11/23
CDs Drawn By: CLM

Copyright © 2023 (2023) The Drees Company. All Rights Reserved.
8521 Six Forks Road, Suite 500, Raleigh, NC 27615
Phone: [919] 844-9288

Sheet Information

7.02
House Specific Details
Elevation "G"

J:\Contracts\SOUTHEASTRALEIGH\TBRD\TBRD-0038-00\TBRD-0038-00.rvt
8/25/2025 10:18:52 AM

CONNECTION SPECIFICATIONS (TYP. U.N.O.)

NOTE: 10d NAIL = 3" x 0.131" GUN NAIL

JOIST TO SOLE PLATE	(3)10d TOENAILS
SOLE PLATE TO JOIST/BLK'G.	10d NAILS @ 6" o.c.
STUD TO SOLE PLATE	(3)10d TOENAILS
TOP OR SOLE PLATE TO STUD	(3)10d NAILS
RIM TO TOP PLATE	10d TOENAILS @ 6" o.c.
BLK'G. BTWN. JOISTS TO TOP PL.	(3)10d TOENAILS
RAFTER/TRUSS TO TOP PLATE	(3)10d TOENAILS + (1) SIMPSON H2.5A
GAB. END TRUSS TO DBL. TOP PL.	10d TOENAILS @ 8" o.c.
R.T. W/ HEEL HT. 9 1/4" TO 12"	2x10 BLK EVERY 3RD BAY FASTENED TO DBL. TOP PLATE W/ 10d TOENAILS @ 6" O.C.
R.T. W/ HEEL HT. 12" TO 16"	2x12 BLK EVERY 3RD BAY FASTENED TO DBL. TOP PLATE W/ 10d TOENAILS @ 6" O.C.
R.T. W/ HEEL HT. UP TO 24"	LAP WALL SHT'G. W/ DBL. TOP PL. & INSTALL ON TRUSS VERT. - FASTEN W/ 8d NAILS @ 6" O.C.
R.T. W/ HEEL HT. 24" TO 48"	LAP WALL SHT'G. W/ DBL. TOP PL. & INSTALL ON TRUSS VERT. - FASTEN W/ 8d NAILS @ 6" O.C. PROVIDE 2x BLK @ EA. BAY AT TOP OF HEEL
DOUBLE STUD	10d NAILS @ 24" o.c.
DOUBLE TOP PLATE	10d NAILS @ 24" o.c.
DOUBLE TOP PLATE LAP SPLICE	(10)10d NAILS IN LAPPED AREA
TOP PLATE LAP @ CORNERS & INTERSECTING WALLS	(2)10d NAILS
WALL TO FOUNDATION	WALL SHT'G. LAP W/ SILL PL. & FASTENED PER SHEAR WALL FASTENING SPEC.

GARAGE SLAB

4" CONC. SLAB W/ 6x6-W1.4xW1.4 WWF ON 6 MIL VAPOR BARRIER ON 4" MIN. GRANULAR FILL ON 95% COMPACTED FILL/VIRGIN SOIL

PORCH SLAB

4" CONC. SLAB W/ 6x6-W1.4xW1.4 WWF ON 95% COMPACTED FILL/VIRGIN SOIL

BASEMENT SLAB

4" CONC. SLAB ON 6 MIL VAPOR BARRIER ON 4" MIN. GRANULAR FILL ON 95% COMPACTED FILL/VIRGIN SOIL

SLAB ON GRADE

4" CONC. SLAB W/ 6x6-W1.4xW1.4 WWF ON 6 MIL VAPOR BARRIER ON 4" MIN. GRANULAR FILL ON 95% COMPACTED FILL/VIRGIN SOIL

HOLD-DOWN SCHEDULE

SYMBOL	SPECIFICATION
HD-1	SIMPSON HTT4 HOLD-DOWN *
HD-2	SIMPSON HDU4-SDS2.5 HOLD-DOWN *
HD-3	SIMPSON HDU5-SDS2.5 HOLD-DOWN *
HD-4	SIMPSON STHD14RJ HOLD-DOWN
HD-5	SIMPSON CS16 STRAP TIE (14" END LENGTH)
HD-6	SIMPSON MSTC40 STRAP TIE (CENTER STRAP ON FLOOR SYSTEM U.N.O.)
HD-7	SIMPSON MSTC66 STRAP TIE (CENTER STRAP ON FLOOR SYSTEM U.N.O.)

ALTERNATIVE TO SSTB24 ANCHOR BOLT SPECIFICATION:

* UTILIZE SIMPSON "SET" EPOXY SYSTEM TO FASTEN 5/8" DIA. THREADED ROD INTO CONCRETE FOUNDATION. PROVIDE 12" MIN. EMBEDMENT INTO CONCRETE. INSTALL PER MANUF. RECOMMENDATIONS. DO NOT LOCATE ANCHORS WITHIN 1 3/4" OF EDGE OF FOUNDATION.

VENEER LINTEL SCHEDULE

SPAN (MAX)	HEIGHT OF VENEER ABOVE LINTEL	STEEL ANGLE SIZE
3'-0"	20 FT. MAX	L4"x3"x1/4"
6'-0"	3 FT. MAX	L4"x3"x1/4"
	16 FT. MAX	L5"x3"x5/16"
8'-0"	6 FT. MAX	L5"x3"x5/16"
9'-6"	3 FT. MAX	L5"x3"x5/16"
12'-0"	2 FT. MAX	L5"x3"x5/16"

ALL LINTELS:
- SHALL SUPPORT 2 3/4" - 3 1/3" VENEER W/ 40 psf MAXIMUM HEIGHT.
  - < 8' SHALL HAVE 4" MIN. BEARING
  - >= 8' SHALL HAVE 8" MIN. BEARING
  - < 12' SHALL NOT BE FASTENED BACK TO HEADER.
  - >= 12' SHALL BE FASTENED BACK TO WOOD HEADER IN WALL @48"o.c. W/ 1/2" DIA. x 3 1/2" LONG LAG SCREWS IN 2" LONG VERTICALLY SLOTTED HOLES.
- MAX. VENEER HT. APPLIES TO ANY PORTION OF BRICK OVER THE OPENING.
- ALL LINTELS SHALL BE LONG LEG VERTICAL.
- ALL LINTELS SHALL BE MADE OF 36 KSI STEEL.
- WHEN SUPPORTING VENEER < 5" HIDE THE EXTERIOR TOE OF THE HORIZONTAL LEG MAY BE CUT IN THE FIELD TO BE 3 1/4" HIDE OVER THE BEARING LENGTH ONLY. THIS IS TO ALLOW FOR MORTAR JOINT FINISHING.
- SEE STRUCTURAL PLANS FOR ANY LINTEL CONDITION NOT ENCOMPASSED BY THE ABOVE PARAMETERS.

MIK STND. - MAY 2016

LEGEND

- INTERIOR BEARING WALL
- BEARING WALL ABOVE
- BEAM / HEADER
- EXTENT OF OVERFRAMING
- METAL HANGER
- INDICATES EXTENT OF INT. OSB SHEARWALL, BLOCKED PANEL EDGES, AND/OR 3" O.C. EDGE NAILING
- INDICATES HOLDOWN
- INDICATES POST ABOVE (P.A.) PROVIDE SOLID BLOCKING UNDER POST OR JAMB ABOVE.

ADDITIONAL NOTES FOR TRUSS & I-JOIST MANUFACTURER

ROOF TRUSS, FLOOR TRUSS AND ENGINEERED JOISTS SHALL BE DESIGNED TO MEET THE DEFLECTION CRITERIA BELOW, UNLESS NOTED OTHERWISE ON PLAN. MULHERN & KULP CANNOT BE HELD RESPONSIBLE FOR ANY STRUCTURAL ISSUES RELATED TO ANY BUILDING COMPONENT IF COMPONENT SHOP DRAWINGS ARE NOT SUBMITTED TO M+K FOR REVIEW PRIOR TO FABRICATION, DELIVERY, OR INSTALLATION.

TRUSSES/JOISTS SHALL BE DESIGNED SO THAT DIFFERENTIAL DEFLECTION BETWEEN ADJACENT PARALLEL TRUSSES/JOISTS OR GIRDER TRUSSES/FLUSH BEAMS DO NOT EXCEED THE FOLLOWING:

A. ROOF TRUSSES:
   1/4" DEAD LOAD
B. FLOOR TRUSSES, ATTIC TRUSSES, & I-JOISTS:
   1/8" DEAD LOAD

ABSOLUTE DEAD LOAD DEFECTION OF FLOOR TRUSSES/ATTIC TRUSSES WHEN ADJACENT TO FLOOR FRAMING BY OTHERS SHALL BE LIMITED TO 3/16". (NOT DIFFERENTIAL DEFLECTION)

GENERAL STRUCTURAL NOTES

FOUNDATION

- DESIGN IS BASED ON 2018 NORTH CAROLINA RESIDENTIAL CODE.
- FOOTING DESIGN - 1,500 PSF NET ALLOWABLE SOIL BEARING PRESSURE IS ASSUMED. BUILDER/CONTRACTOR MUST VERIFY.
- FASTEN 2x SILL PLATES TO CONC FND WITH A MINIMUM OF 2 ANCHORS PER PLATE, 12" MAX. FROM PLATE ENDS - UTILIZING:
  - 1/2" DIA. ANCHOR BOLTS @ 6'-0" O.C.,7" MIN. EMBEDMENT
  - SIMPSON MAB STRAPS @ 32" O.C.
  - SIMPSON MASA ANCHOR STRAPS @ 6'-0" O.C.
- ALL LUMBER EXPOSED TO WEATHER OR IN CONTACT W/ PERIMETER FOUNDATION SHALL BE PRESERVATIVE TREATED SOUTHERN PINE #2.
- BUILDER TO VERIFY CORROSION-RESISTANCE COMPATIBILITY OF HARDWARE & FASTENERS IN CONTACT W/ PRESERVATIVE-TREATED WOOD. CONTACT LUMBER & HARDWARE SUPPLIERS TO COORD.
- FOUNDATION WALLS & FOOTINGS SHALL BE PLAIN CONCRETE, U.N.O.
- CONCRETE DESIGN BASED ON ACI 318. CONCRETE SHALL ATTAIN THE FOLLOWING MIN. COMPRESSIVE STRENGTHS IN 28 DAYS, U.N.O.:
  - f'c = 4,000 psi: ..... FOUNDATION WALLS
  - 3,000 psi: ..... FOOTINGS & INTERIOR SLABS ON GRADE
  - 3,500 psi: ..... GARAGE & EXTERIOR SLABS ON GRADE
  - fy = 60,000 psi
- BASEMENT FOUNDATION WALL DESIGN BASED ON:
  - 8' OR 9' HEIGHT (AS NOTED ON PLANS)
  - TALLER WALLS MUST BE ENGINEERED.
  - NOMINAL WIDTH (8" FOR 8' WALL, 10" FOR 10' WALL).
- BASEMENT WALL DESIGN IS BASED ON 30 OR 45 PCF BACKFILL SOIL TYPE CLASSIFICATIONS:
  - 30 PCF TYPE (GW, GP, SW, SP)
  - 45 PCF TYPE (GM, GC, SM, SM-SC, ML)
  - IMPORTANT - IF 60 PCF SOIL TYPE (SC, ML-CL, OR CL) IS UTILIZED FOR BACKFILL, CONTACT MULHERN & KULP FOR FURTHER EVALUATION OF FOUNDATION DESIGN.
- BASEMENT WALLS SHALL BE BRACED, PRIOR TO BACKFILLING, BY ADEQUATE TEMPORARY BRACING OR INSTALL 1st FLOOR DECK.
- PROVIDE (2) #5 BARS AROUND ALL SIDES OF OPENINGS IN CONCRETE BSMT. FND. WALL WITH 2" CLEAR. REINFORCEMENT SHALL EXTEND 12" PAST CORNER OF OPENING IN ALL DIRECTIONS.
  - FOR OPENINGS UP TO 36", PROVIDE MINIMUM 10" CONCRETE DEPTH OVER OPENING OR (3)2x10 w/(2)2x6 JACK STUDS, U.N.O.
  - LARGER OPENINGS SHALL BE PER PLAN.
- ALL CONCRETE EXPOSED TO THE WEATHER SHALL NOT HAVE LESS THAN 5% OR MORE THAN 7% AIR ENTRAINMENT.
- ALL FOOTINGS SHALL BEAR BELOW FROST LINE (TYP.) OR 12" MIN IN REGIONS WHERE CODE FROST DEPTH IS NOT APPLICABLE. CONSULT SOILS REPORT OR BUILDING DEPT. FOR MINIMUM DEPTH BELOW GRADE.
- FOOTINGS AND SLABS ON GRADE SHALL BEAR ON VIRGIN SOIL OR 95% COMPACTED FILL.
- PROVIDE CONTROL JOINTS AT ALL INSIDE CORNERS OF SLAB EDGES, AND OTHER LOCATIONS WHERE SLAB CRACKS ARE LIKELY TO DEVELOP.
  - JOINTS SHALL BE LOCATED @ 10'-0" O.C. (RECOMMENDED) OR 15'-0" O.C. (MAXIMUM)
  - JOINT GRID PATTERN SHALL BE AS CLOSE TO SQUARES AS POSSIBLE (1:1 RATIO), WITH A MAXIMUM OF 1:1.5 RATIO
  - CONTROL JOINTS SHALL NOT BE INSTALLED IN STRUCTURAL SLABS
- TYPICAL REINFORCEMENT DETAILS: PROVIDE 3" MIN. CLEAR COVER WHERE CAST AGAINST EARTH, 1 1/2" MIN. CLEAR COVER AGAINST FORMS. LAP ALL REBAR 48 BAR DIAMETERS MIN. (24" FOR #4 BARS) & BEND BARS AND LAP AT CORNERS. PROVIDE 6" HOOK INTO SUPPORTING FOOTINGS WHEN FOOTINGS INTERSECT.
- DIMENSIONS BY OTHERS, BUILDER TO VERIFY.

MIK STND. - MAY 2012

LATERAL/WALL BRACING & WALL SHEATHING SPECIFICATIONS

THIS MODEL HAS BEEN DESIGNED TO RESIST LATERAL FORCES RESULTING FROM:

120 MPH WIND IN 2018 NCSRC

(120 MPH WIND SPEED IN ASCE 7-10 WIND MAP, PER IRC R301.2.1.1)
EXP. B & SEISMIC CAT. A/B.

EXT. WALL SHEATHING SPECIFICATION

- 7/16" OSB OR 15/32" PLYWOOD:
  FASTEN SHEATHING W/ 2 3/8"x0.113 NAILS @ 6" O.C. AT EDGES & @ 12" O.C. IN THE PANEL FIELD. (TYP, U.N.O.)
- ALL SHEATHING PANELS SHALL BE ORIENTED VERTICALLY (LONG DIRECTION PARALLEL TO STUDS) AND INSTALLED FULL HEIGHT OF SHEAR WALL - OR - 2x HORIZONTAL BLOCKING SHALL BE PROVIDED TO SUPPORT ALL UNSUPPORTED PANEL EDGES & EDGE FASTENING.
- ALL EXT. WALLS SHALL BE CONTINUOUSLY SHEATHED AND ARE CONSIDERED SHEAR WALLS.
- ALT. STAPLE CONNECTION SPEC: 1 3/4" 16 GA STAPLES (7/8" CROWN) @ 3" O.C. AT EDGES & @ 6" O.C. IN FIELD.

3" O.C. EDGE NAILING

- AT DESIGNATED AREAS - FASTEN PANEL EDGES OF WOOD STRUCTURAL WALL SHEATHING TO FRAMING W/ 2 3/8" x 0.113" NAILS @ 3" O.C. AND 12" O.C. IN THE PANEL FIELD. NO STAPLE ALTERNATIVE AVAILABLE AT THIS SPEC. ALL SHEATHING PANELS SHALL BE ORIENTED VERTICALLY (LONG DIRECTION PARALLEL TO STUD) AND INSTALLED FULL HEIGHT OF SHEAR WALL - OR - 2x HORIZONTAL BLOCKING SHALL BE PROVIDED TO SUPPORT UNSUPPORTED PANEL EDGES AND 3" O.C. EDGE FASTENING.

NOTES

- SEE CONNECTION SPECIFICATIONS CHART FOR STANDARD SHEAR TRANSFER DETAILING. IF ADDITIONAL CAPACITY IS REQUIRED BY DESIGN, IT WILL BE SPECIFICALLY NOTED ON PLAN.
- DESIGN ASSUMES 16" O.C MAX. STUD SPACING, U.N.O.
- ALL STRUCTURAL PANELS ARE TO BE DIRECTLY APPLIED TO STUD FRAMING.
- PRE-MANUFACTURED PANELIZED WALLS:
  FASTEN TOGETHER END STUDS OF WALL PANELS SHEATHED W/ OSB OR PLYWOOD W/ 10d NAILS @ 4" O.C. (THRU ONE SIDE ONLY)

- INDICATES EXTENT OF INT. OSB SHEARWALL, BLOCKED PANEL EDGES, AND/OR 3" O.C. EDGE NAILING
- INDICATES HOLDOWN
- INDICATES POST ABOVE (P.A.) PROVIDE SOLID BLOCKING UNDER POST OR JAMB ABOVE.

MIK STND. - SEPT. 2019

GENERAL STRUCTURAL NOTES

FLOOR FRAMING

- I-JOISTS/TRUSSES SHALL BE DESIGNED BY MANUF. TO MEET OR EXCEED L/480 LIVE LOAD DEFLECTION CRITERIA. (EXCLUDES STONE/MARBLE OR WET BED CONSTRUCTED FLOORS - CONTACT M+K FOR EXCLUDED FLOOR DESIGNS)
- PER THE GUIDELINES OF THE TILE COUNCIL OF NORTH AMERICA (TCNA HANDBOOK), IT SHALL BE THE FLOOR FINISH INSTALLER'S RESPONSIBILITY TO VERIFY THAT THE FINISHES TO BE INSTALLED MATCH THE DESIGN CRITERIA NOTED ABOVE (UNDER "DESIGN LOADS") .
- AT I-JOIST FLOORS, PROVIDE 1 1/8" MIN. OSB RIM BOARD.
- METAL HANGERS SHALL BE SPECIFIED BY MANUFACTURER, U.N.O.
- FLOOR SHEATHING SHALL BE 23/32" A.P.A. RATED 'STURD-I-FLOOR' 24" O.C, EXPOSURE 1 (OR APPROVED EQUAL) WITH TONGUE AND GROOVE EDGES. FASTEN TO FRAMING MEMBERS W/ GLUE AND
  - 2 1/2" x 0.131" NAILS @ 6"o.c. @ PANEL EDGES & @ 12"o.c. FIELD.
  - 2 3/8" x 0.120" NAILS @ 4" O.C. @ PANEL EDGES & @ 8" O.C. FIELD.
  - 2 3/8" x 0.113" NAILS @ 3" O.C. @ PANEL EDGES & @ 6" O.C. IN FIELD.

ROOF FRAMING

- ROOF SHEATHING SHALL BE 7/16" A.P.A. RATED SHEATHING 24/16 EXPOSURE 1 (OR APPROVED EQUAL). FASTEN TO FRAMING MEMBERS
  - W/ 2 1/2" x 0.131" NAILS @ 6"o.c. @ PANEL EDGES & @ 12" O.C. FIELD.
  - W/ 2 3/8" x 0.120" NAILS @ 4"o.c. @ PANEL EDGES & @ 8" O.C. FIELD.
  - W/ 2 3/8" x 0.113" NAILS @ 3"o.c. @ PANEL EDGES & @ 6" O.C. FIELD.
- WITHIN 48" OF ALL ROOF EDGES, RIDGES, & HIPS FASTEN ROOF SHEATHING FIELDS PER EDGE NAILING SPEC.
- FASTEN EACH ROOF TRUSS TO TOP PLATE W/ SIMPSON H2.5A CLIP (OR APPROVED EQUAL) @ ALL BEARING POINTS. PROVIDE (2) H2.5A CLIPS AT 2-PLY GIRDER TRUSSES, (3) H2.5A CLIPS AT 3-PLY GIRDER TRUSSES & ROOF BEAMS - AT ALL BEARING POINTS.
- METAL HANGERS SHALL BE SPECIFIED BY THE MANUFACTURER, U.N.O.
- ERECT AND INSTALL ROOF TRUSSES PER NTCA & TPI'S BCSI 1 "GUIDE TO GOOD PRACTICE FOR HANDLING, INSTALLING & BRACING OF METAL PLATE CONNECTED WOOD TRUSSES."
- SUPPORT SHORT SPAN ROOF TRUSSES W/2x4 LEDGER FASTENED TO FRAMING W/(2) 3" x 0.120" NAILS @ 16" O.C. (UP TO 7' SPAN).

MIK STND. - MAR 2016

MULHERN+KULP
RESIDENTIAL STRUCTURAL ENGINEERING
300 Brookside Ave, Building 4 ▸ Ambler, PA 19002
p 215-646-8001 ▸ mulhernkulp.com

GENERAL STRUCTURAL NOTES

- DESIGN IS BASED ON 2018 NORTH CAROLINA RESIDENTIAL CODE.
- WOOD FRAME ENGINEERING IS BASED ON NDS, "NATIONAL DESIGN SPECIFICATION FOR WOOD CONSTRUCTION" - LATEST EDITION.
- DESIGN LOADS:
  - ROOF: LIVE = 20 PSF (18 PSF REDUCED); DEAD = 7 PSF T.C., 10 PSF B.C.; LOAD DURATION FACTOR = 1.15
  - FLOOR: LIVE = 40 PSF (30 PSF @ SLEEPING AREAS); DEAD = 10 PSF (I-JOISTS & SOLID SAWN) ADD'L 10 PSF @ CERAMIC TILE IN KITCHEN, BATHS, SUNROOM, & LAUND.
  - SOIL: 1,500 PSF ASSUMED ALLOWABLE BEARING PRESSURE (TO BE VERIFIED BY BUILDER)

GENERAL FRAMING

- ALL TYP. NAIL FASTENER REQUIREMENTS ARE NOTED IN STANDARD CONNECTIONS TABLE (IRC TABLE R602.3(1)) OR ON PLANS. ALL NAILS SPECIFIED ARE MIN DIAMETER AND LENGTH REQUIRED FOR CONNECTION. ALL HANGER NAILS SHALL BE INSTALLED PER MANUFACTURER'S REQUIREMENTS FOR MAX CHARTED CAPACITY. NOTE: HANGERS USE COMMON NAIL DIAMETERS NOT TYPICAL FRAMING GUN NAILS.
- EXT. & INT. BEARING WALLS SHALL BE 2x4 OR 2x6 (AS SHOWN ON PLANS) @ 16" O.C. SPF "STUD" GRADE LUMBER, OR BETTER, U.N.O.
  - WALLS OVER 10' TALL SHALL BE PER PLAN.
- ALL INTERIOR BEARING WALLS ARE ASSUMED TO BE SHEATHED W/ GYP WALL BOARD (ONE SIDE MIN.) OR PROVIDE MID HT. BLOCKING.
- ALL 2x8, 2x10, & 2x12 HEADERS, BEAMS & OTHER STRUCTURAL MEMBERS SHALL BE S.Y.P. #2 LUMBER, OR BETTER.
- ALL 2x6 HEADERS, BEAMS & OTHER STRUCTURAL MEMBERS SHALL BE SPF "STUD" GRADE LUMBER, OR BETTER.
- SUPPORT ALL HEADERS/ BEAMS W/ (1)2x JACK STUD & (1)2x KING STUD, MINIMUM.
  - THE NUMBER OF STUDS SPECIFIED AT A SUPPORT INDICATES THE NUMBER OF JACK STUDS REQUIRED, U.N.O..
- ALL NON-BEARING INTERIOR STUD WALLS SHALL BE CONSTRUCTED WITH 2x STUD' GRADE MEMBERS SPACED @ 24" O.C. (MAX., U.N.O.)
  - * HEADERS IN NON-LOAD BEARING WALLS SHALL BE: (1)2x4/6 FLAT @ OPENINGS UP TO 4', (2)2x4/6 FLAT UP TO 8'.
- ALL FRAMING LUMBER SHALL BE DRIED TO 15% MC (KD-15).
- ENGINEERED LUMBER BEAMS TO MEET OR EXCEED THE FOLLOWING:
  - 1.5L' - Fb=2325 psi; Fv=310 psi; E=1.55x10^6 psi
  - 1.VL' - Fb=2600 psi; Fv=285 psi; E=2.0x10^6 psi
- ENGINEERED LUMBER POSTS TO MEET OR EXCEED THE FOLLOWING:
  - 1.VL' - Fb=2400 psi; Fc||=2500 psi; E=1.8x10^6 psi
- FOR 2 & 3 PLY BEAMS OF EQUAL 1 3/4" MAX. WIDTH, FASTEN PLIES TOGETHER WITH 3 ROWS OF 3"x0.120" NAILS @ 8" O/C OR 2 ROWS 1/4"x3 1/2" SIMPSON SDS SCREWS (OR 3 1/2" TRUSSLOK SCREWS) @ 16" O/C. USE A MINIMUM OF 4 ROWS FOR BEAM DEPTHS OF 14" OR GREATER. APPLY FASTENING AT BOTH FACES FOR 3-PLY CONDITION. LOCATE TOP & BOTTOM NAILS/SCREWS 2" FROM EDGE. SOLID 3 1/2" OR 5 1/2" BEAMS ARE ACCEPTABLE. USE 2 ROWS OF NAILS FOR 2x6 & 2x8 MEMBERS.
- FOR 4 PLY BEAMS OF EQUAL 1 3/4" MAX. WIDTH, FASTEN PLIES TOGETHER WITH 3 ROWS OF 1/4"x6" SIMPSON SDS SCREWS (OR 6 3/4" TRUSSLOK SCREWS) @ 16" O/C. USE A MINIMUM OF 4 ROWS FOR BEAM DEPTHS OF 14" OR GREATER. APPLY FASTENING AT BOTH FACES (ONE SIDE ONLY FOR TRUSSLOK SCREWS). LOCATE TOP AND BOTTOM SCREWS 2" FROM EDGE. A SOLID 7" BEAM IS ACCEPTABLE.
- PROVIDE SOLID BLOCKING IN FLOOR SYSTEM UNDER ALL POSTS CONTINUOUS TO FND./BEARING. BLOCKING TO MATCH POST ABOVE.
- FASTEN 2x WOOD PLATES TO TOP FLANGE OF STEEL BEAMS WITH P.A.F.'s ("HILTI" X-U PINS OR EQUAL) @ 16" O.C. STAGGERED, OR 1/2" DIA. BOLTS @ 48" O.C. STAGGERED.
- STEEL PIPE COLUMN "ASD CAPACITIES" SHALL MEET OR EXCEED THE LOADS PROVIDED AT EACH STEEL PIPE COLUMN LOCATION ON PLAN. COLUMNS ARE TO BE INSTALLED PER THE MANUFACTURER'S REQUIREMENT THAT ACHIEVES THE RATED CAPACITY USED, INCLUDING BUT NOT LIMITED TO POSITIVE CONNECTIONS AT THE TOP AND BOTTOM OF THE COLUMN. TWO COLUMNS MAY BE USED UNDER CONTINUOUS BEAMS TO ACHIEVE THE FULL PLAN SPECIFIED REQUIRED CAPACITY IF INSTALLED CENTERED ON THE EXISTING FOOTING/ PLAN SPECIFIED SINGLE COLUMN LOCATION.

seal:

NORTH CAROLINA PROFESSIONAL SEAL 042188 ENGINEER

© copyright - MULHERN & KULP STRUCTURAL ENGINEERS

Drees HOMES SM

Mulhern+Kulp project number: 085-20015

project mgr:	BSM
drawn by:	BJD
issue date:	08-08-23

REVISIONS:

date:	initial:
05/30/2024 UPDATED NOTES	DML

MULHERN+KULP
RESIDENTIAL STRUCTURAL ENGINEERING
300 Brookside Ave, Building 4 ▸ Ambler, PA 19002
p 215-646-8001 ▸ mulhernkulp.com

STRUCTURAL NOTES

PARKETTE MODEL

sheet: S-0

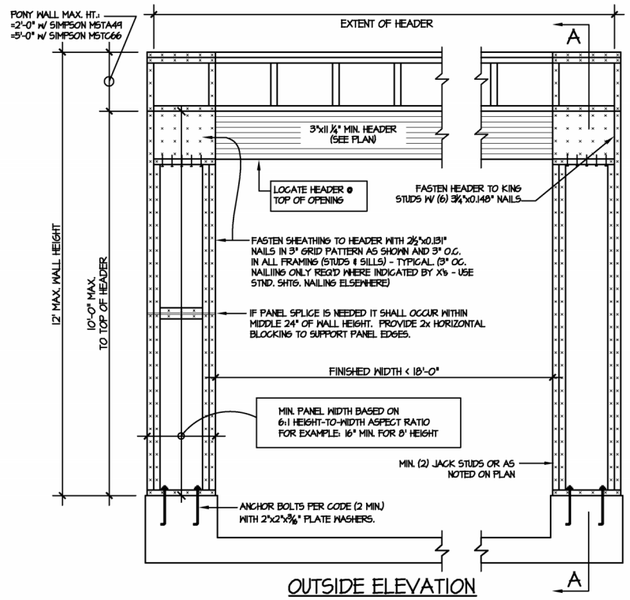

OUTSIDE ELEVATION

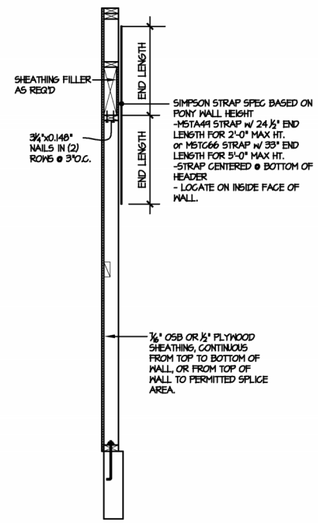

SECTION A-A THROUGH PIER

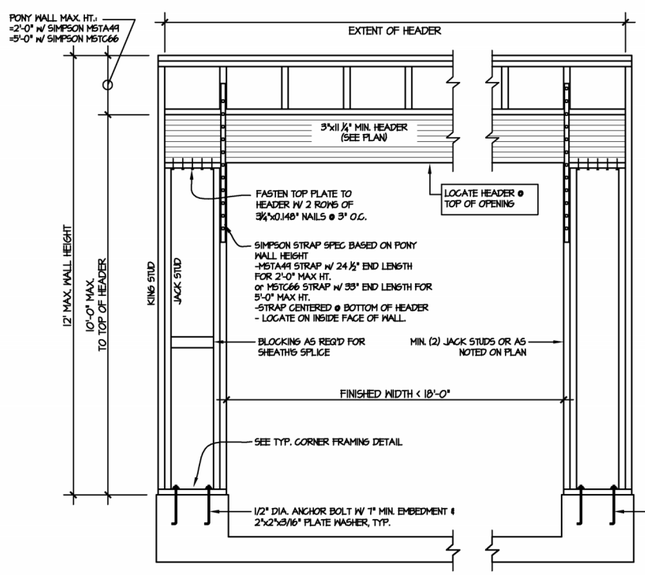

INSIDE ELEVATION

NOTE: ALL SHEATHABLE AREAS OF EXTERIOR WALL SHALL BE FULLY SHEATHED WITH 1/2" PLYWOOD OR 7/16" OSB

WALL FRAMING SPECIFICATION:
@2x4 WALL: USE HF #2 GRADE STUDS (OR BETTER)
@2x6 WALL: USE SPF 'STUD' GRADE STUDS (OR BETTER)

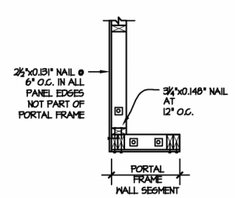

PLAN VIEW OF CORNER DETAIL

ALTERNATIVES TO 1/2" DIA. ANCHOR BOLT:
1) 1/2" DIA. x 6" LONG SIMPSON TITEN HD
2) 1/2" DIA. THREADED ROD EPOXY SET w/4 1/2" EMBED. (MIN) UTILIZING HILTI HY200 EPOXY ANCHORING SYSTEM (OR EQUAL)

1 GARAGE PORTAL FRAME BRACING ELEVATION

SCALE: N.T.S.

BOTH SIDES OF GARAGE DOOR
115 MPH WIND SPEED (ULT)

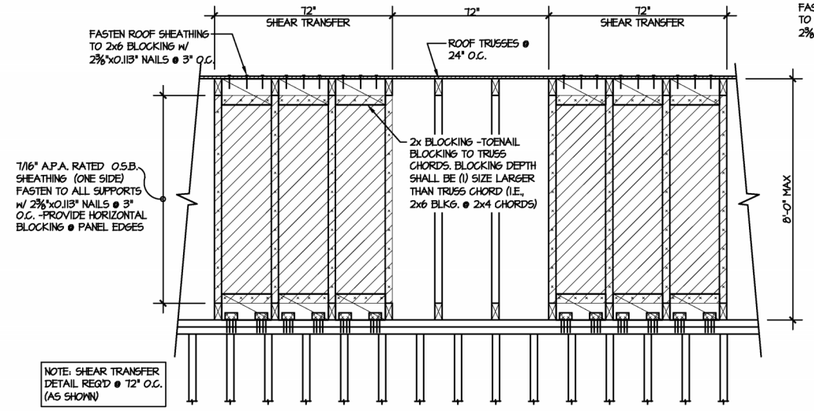

NOTE: SHEAR TRANSFER DETAIL REQ'D @ 72" O.C. (AS SHOWN)

X-X TYPICAL SHEAR TRANSFER DETAIL @ INTERIOR SHEARWALL

SCALE: 3/4"=1'-0"
3/8"=1'-0" (11x17)

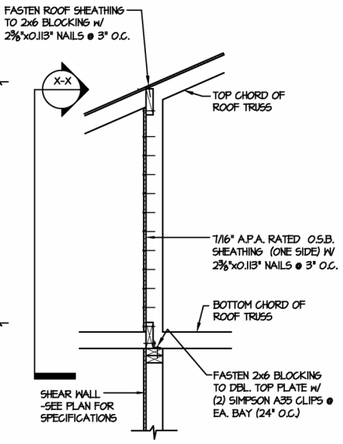

14 TYPICAL SHEAR TRANSFER DETAIL @ INTERIOR SHEARWALL

SCALE: 3/4"=1'-0"
3/8"=1'-0" (11x17)

seal:

NORTH CAROLINA PROFESSIONAL SEAL 042188 ENGINEER

© copyright: MULHERN & KULP, STRUCTURAL ENGINEERS, P.C. - ALL RIGHTS RESERVED

Drees HOMES SM

Mulhern+Kulp project number: 085-20015

project mgr:	BSM
drawn by:	BJD
issue date:	08-08-23

REVISIONS:

date:	initial:
05/30/2024 UPDATED NOTES	DML

MULHERN+KULP
RESIDENTIAL STRUCTURAL ENGINEERING
300 Brookside Ave, Building 6 • Ambler, PA 19002
p 215-646-8001 • mulhernkulp.com

STRUCTURAL NOTES
PARKETTE MODEL

sheet:

SD-1

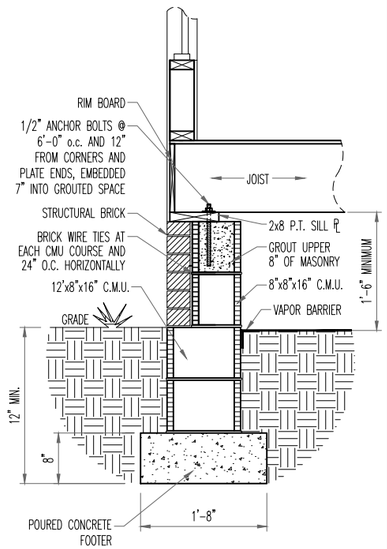

A D1.1 TYP. FRAME WRAP FOOTER w/ PERPENDICULAR FLOOR JOISTS

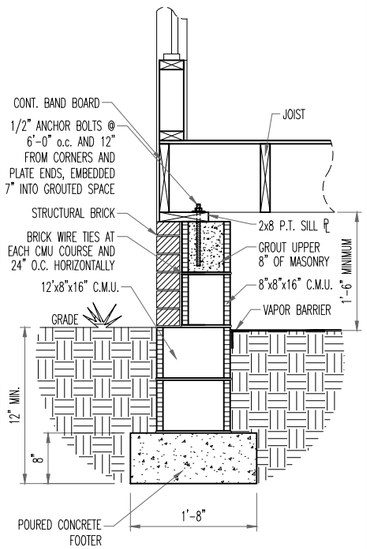

B D1.1 TYP. FRAME WRAP FOOTER w/ PARALLEL FLOOR JOISTS

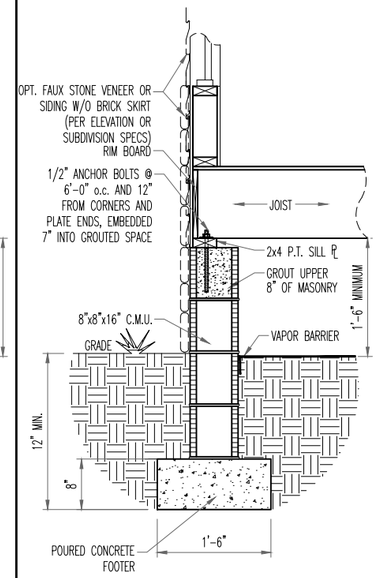

M D1.1 TYP. FAUX STONE FOOTER OR SIDING W/O BRICK SKIRT w/PERPENDICULAR FLOOR JOISTS

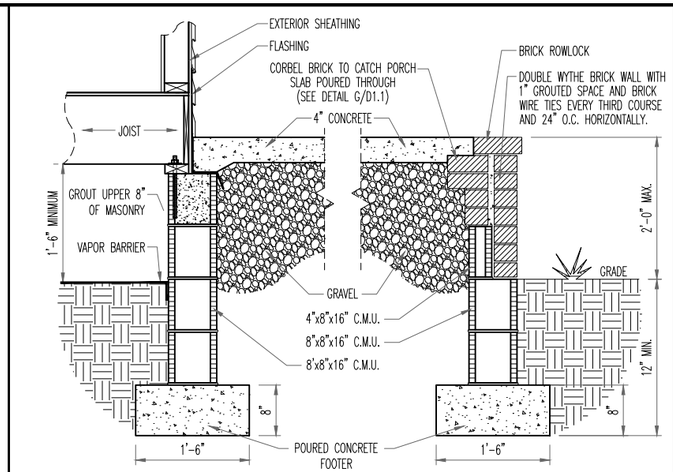

E D1.1 TYP. PORCH SECTION w/ FRAME WRAP

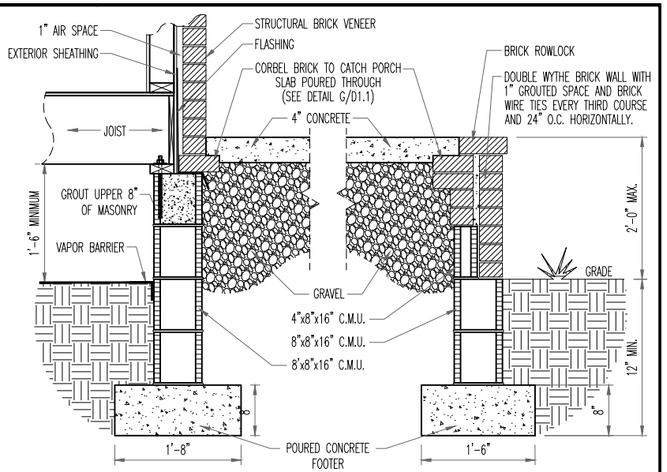

F D1.1 TYP. PORCH SECTION w/ BRICK WRAP

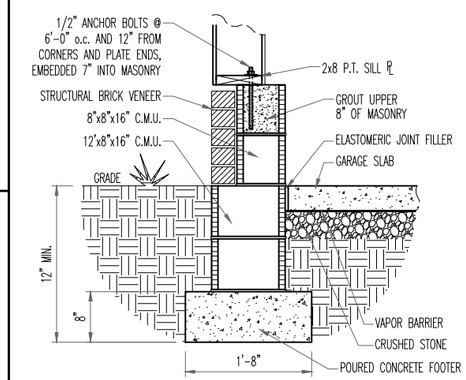

H D1.1 TYP. GARAGE SECTION w/ FRAME WRAP

NOTE: WALL SECTION CANNOT BE USED ON A PORTAL FRAME WALL

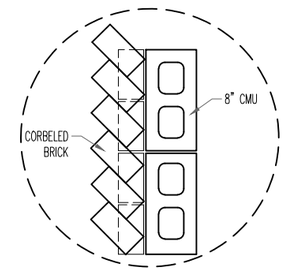

G D1.1 TYP. CORBELED BRICK AT PORCH

PLAN VIEW

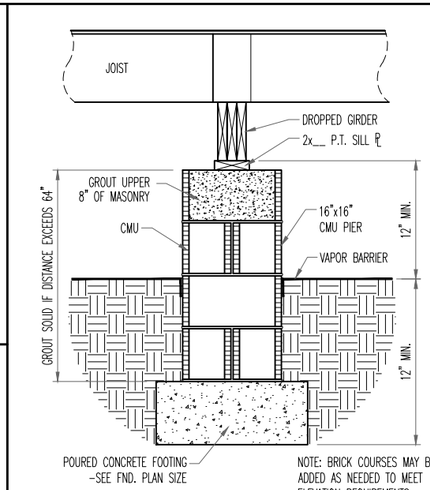

L D1.1 TYP. INTERIOR PIER

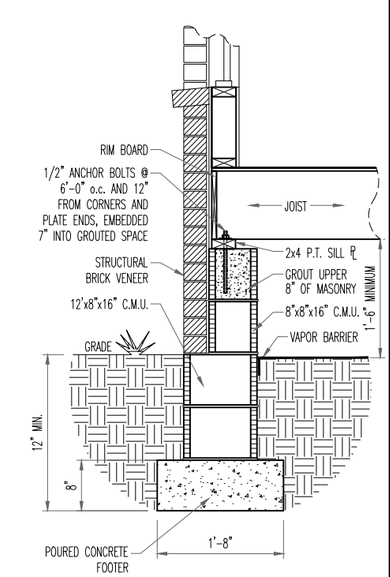

C D1.1 TYP. BRICK WRAP FOOTER w/ PERPENDICULAR FLOOR JOISTS

NOTE: REFER TO MASONRY NOTES ON SHEET ON.1 FOR BRICK VENEER ATTACHMENT.

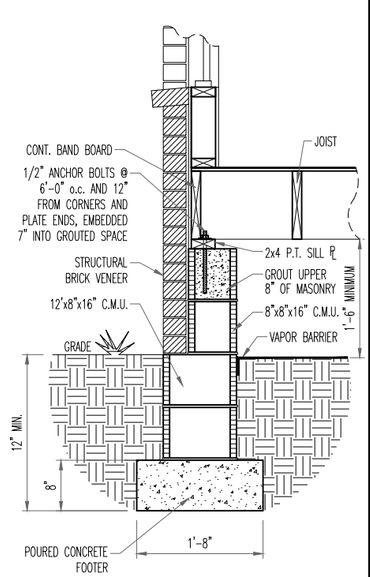

D D1.1 TYP. BRICK WRAP FOOTER w/ PARALLEL FLOOR JOISTS

NOTE: REFER TO MASONRY NOTES ON SHEET ON.1 FOR BRICK VENEER ATTACHMENT.

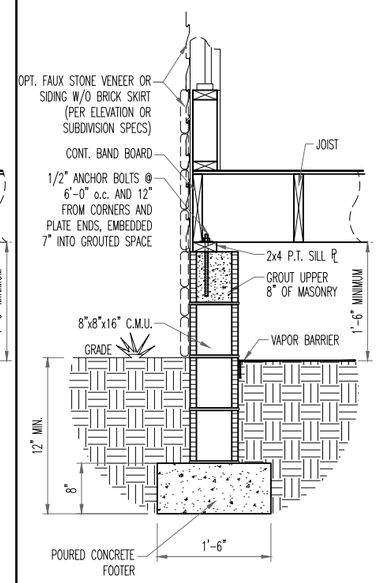

N D1.1 TYP. FAUX STONE FOOTER OR SIDING W/O BRICK SKIRT w/ PARALLEL FLOOR JOISTS

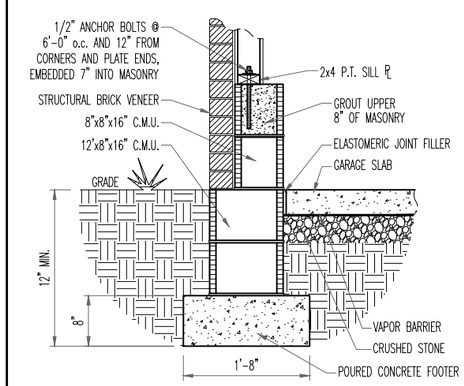

J D1.1 TYP. GARAGE SECTION w/ BRICK WRAP

NOTE: REFER TO MASONRY NOTES ON SHEET ON.1 FOR BRICK VENEER ATTACHMENT.

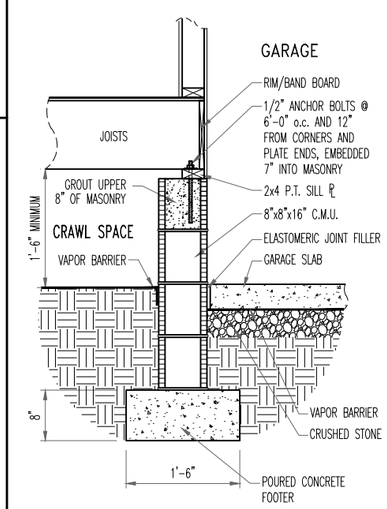

K D1.1 TYP. INTERIOR GARAGE WALL

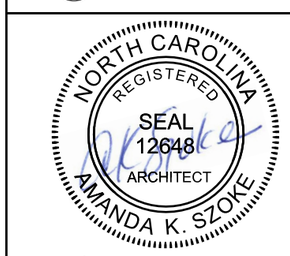

The Drees Company
09/09/2025 3:14:00 PM

Drees HOMES

Drees Homes
7701 Six Forks Road, Suite 132, Raleigh, NC 27615 PH:(919) 844-9288

Copyright ©, 2005 The Drees Company, All rights reserved. These plans are protected by Copyright. No part of these plans may be reproduced in any form or by any means, including photocopying, without the written permission from the Copyright owner.

STD. DETAIL SHEET

REGION: RALEIGH

Std. By: ALL
Chk. By: ARC
Std. Date: 08/19/09
Date of

Sheet Description: FOUNDATION DETAILS

RALEIGH - D-SHEETS.dwg Sep 24, 2015 - 12:12pm

Sheet No. D1.1

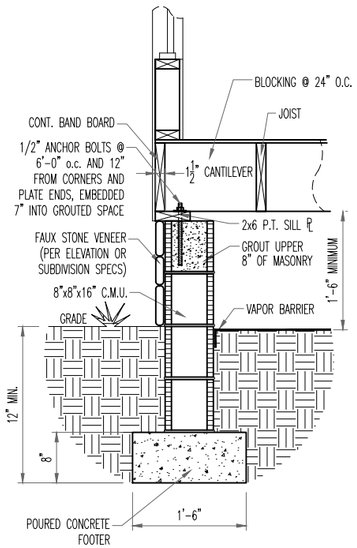

A D1.2 TYP. FAUX STONE SKIRT FOOTER w/ PARALLEL FLOOR JOISTS

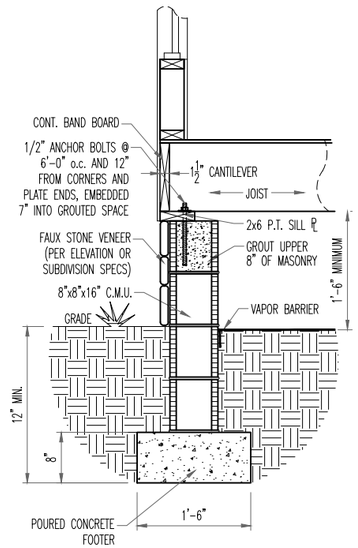

B D1.2 TYP. FAUX STONE SKIRT FOOTER w/ PERPENDICULAR FLOOR JOISTS

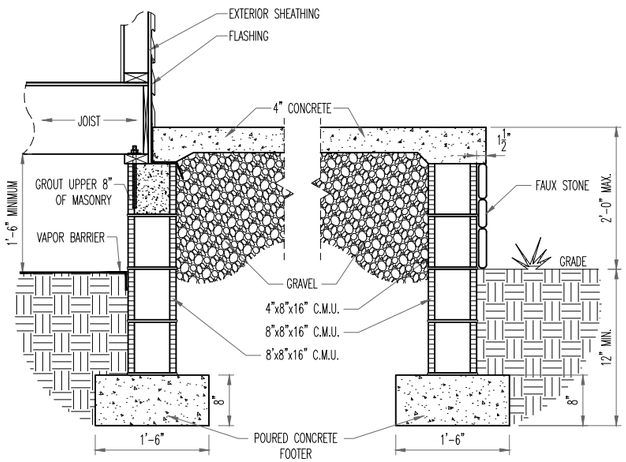

C D1.2 TYP. FAUX STONE SKIRT TYP. PORCH SECTION w/ FRAME WRAP

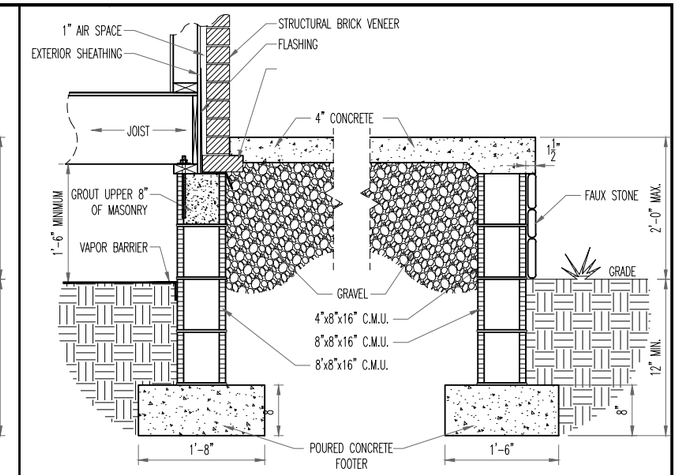

D D1.2 TYP. FAUX STONE SKIRT TYP. PORCH SECTION w/ BRICK WRAP

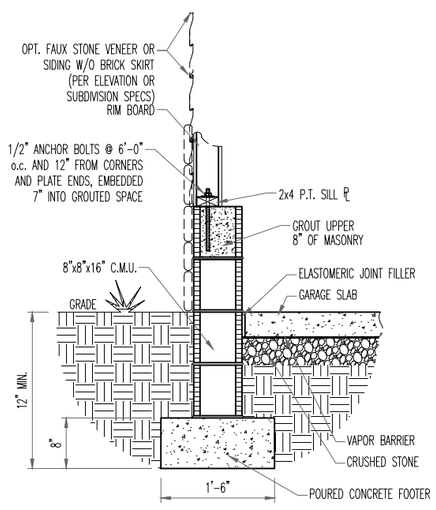

E D1.2 TYP. FAUX STONE FOOTER OR SIDING w/o BRICK SKIRT
TYP. GARAGE SECTION w/ FRAME WRAP

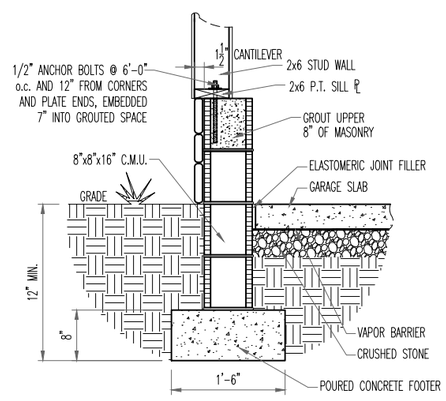

F D1.2 TYP. FAUX STONE SKIRT
TYP. GARAGE SECTION w/ FRAME WRAP

NOTE: WALL SECTION CANNOT BE USED ON A PORTAL FRAME WALL

NORTH CAROLINA REGISTERED SEAL 12648 ARCHITECT AMANDA K. SZOKE

The Drees Company
09/09/2025 3:14:00 PM

Drees HOMES

Drees Homes
7701 Six Forks Road, Suite 132, Raleigh, NC 27615 PH:(919) 844-9288

Copyright ©, 2005 The Drees Company, All rights reserved. These plans are protected by Copyright. No part of these plans may be reproduced in any form or by any means, including photocopying, without the written permission from the Copyright owner.

STD. DETAIL SHEET

REGION: RALEIGH

Std. By:	ALL
Chk. By:	ARC
Std. Date:	08/19/09
Date of	

Sheet Description: FOUNDATION DETAILS

RALEIGH - D-SHEETS.dwg Sep 24, 2015 - 12:14pm

Sheet No. D1.2

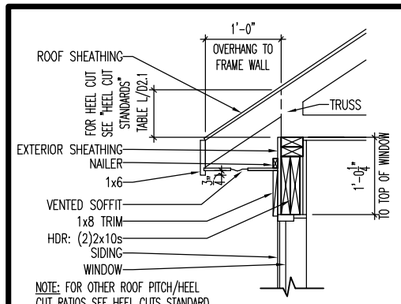

SOFFIT & HEADER DETAIL FRAME WRAP

A / D2.1

SCALE: 1/2" = 1'-0"

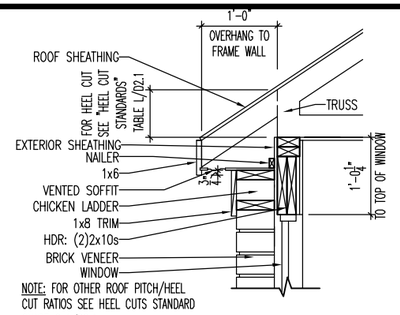

SOFFIT & HEADER DETAIL BRICK WRAP

E / D2.1

SCALE: 1/2" = 1'-0"

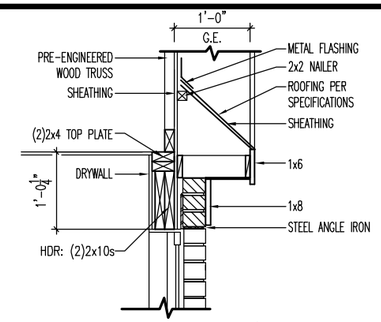

BRICKWRAP W/ FRAMEWRAP ABOVE

3

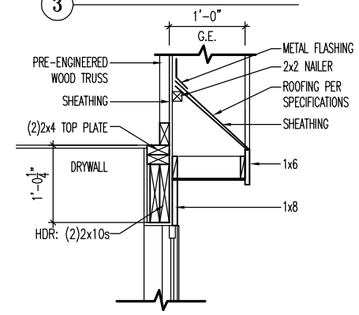

FRAME WRAP

2

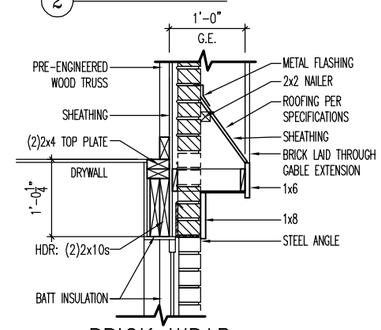

BRICK WRAP

1

GABLE RETURN DETAIL

I / D2.1

SCALE: 1/2" = 1'-0"

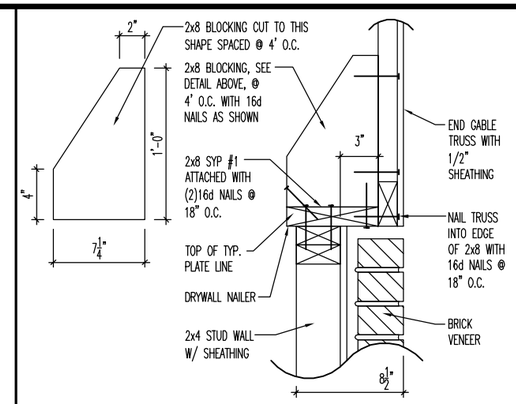

CANTILEVERED TRUSS DETAIL

K / D2.1

SCALE: 1" = 1'-0"

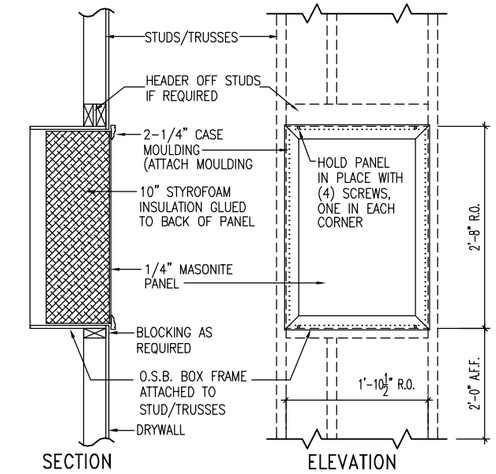

WALL ATTIC ACCESS

N / D2.1

SCALE: 1/2" = 1'-0"

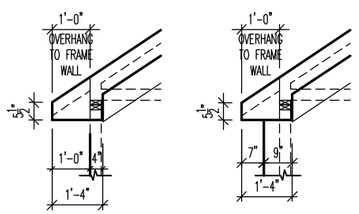

FRAME WRAP BRICK WRAP

OVERHANG SOFFIT DETAILS

B / D2.1

SCALE: 1/4" = 1'-0"

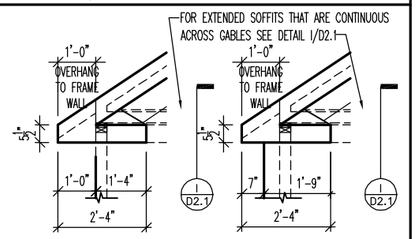

FRAME WRAP BRICK WRAP

EXTENDED SOFFIT DETAILS

F / D2.1

SCALE: 1/4" = 1'-0"

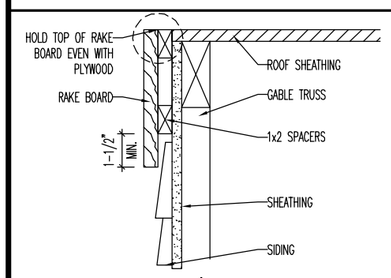

RAKE W/ SIDING W/O GABLE EXTENSION

C / D2.1

SCALE: 1-1/2" = 1'-0"

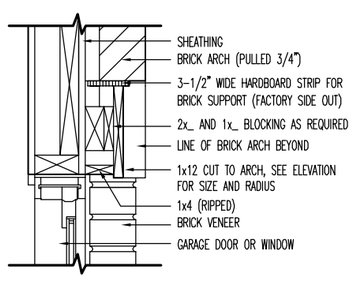

BRICK ARCH DETAIL

G / D2.1

SCALE: 1" = 1'-0"

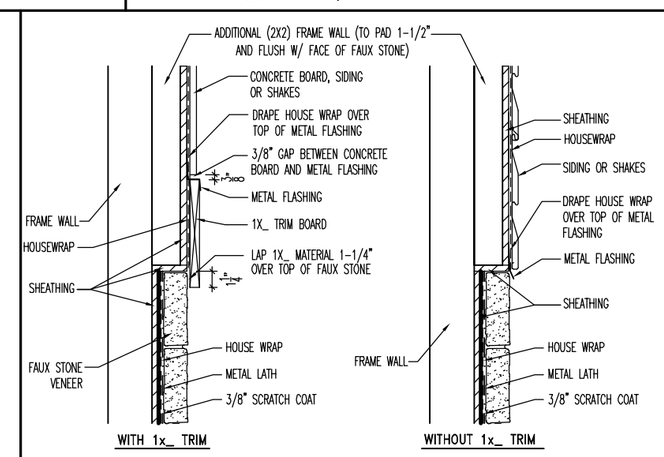

SHAKES, SIDING, OR STUCCO BOARD ABOVE CULTURED STONE

O / D2.1

SCALE: 1" = 1'-0"

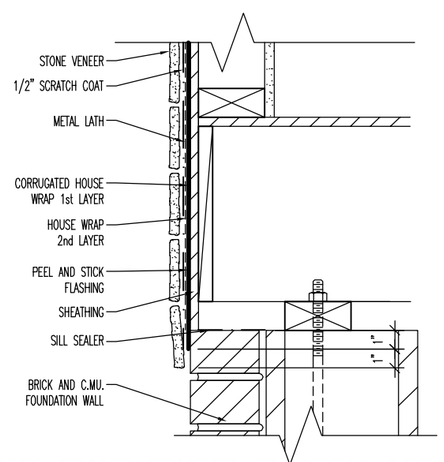

FAUX STONE VENEER FLASHING DETAIL

M / D2.1

SCALE: 1 1/2" = 1'-0"

HEEL CUT STANDARDS	
ROOF PITCH	HEEL CUT
4/12	3-3/4"
5/12	4-3/4"
6/12	5-3/4"
7/12	6-3/4"
8/12	7-3/4"
9/12	8-3/4"
10/12	9-3/4"
12/12	11-3/4"
14/12	1'1-3/4"

L / D2.1

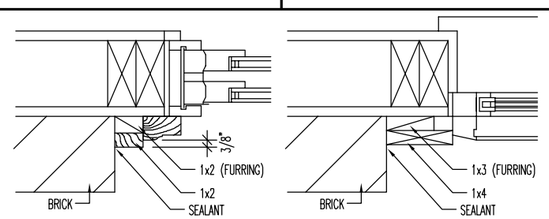

WOOD ONLY VINYL ONLY

WINDOW TRIM DETAILS

H / D2.1

SCALE: 1-1/2" = 1'-0"

The Drees Company
09/09/2025 3:14:00 PM

Drees HOMES

Drees Homes
7701 Six Forks Road, Suite 132, Raleigh, NC 27615 Ph:(919) 844-9288

Copyright ©, 2005 The Drees Company, All rights reserved. These plans are protected by Copyright. No part of these plans may be reproduced in any form or by any means, including photocopying, without the written permission from the Copyright owner.

STD. DETAIL SHEET

REGION: RALEIGH

Std. By:	ALL
Chk. By:	ARC
Std. Date:	10.11.06
Last Rev:	4/5/10 MSM

Sheet Description: FRAMING DETAILS

DETAILS MAY NOT APPLY TO CONTRACT

Sheet No. D2.1

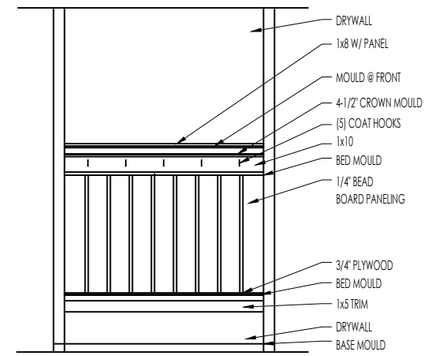

ELEVATION

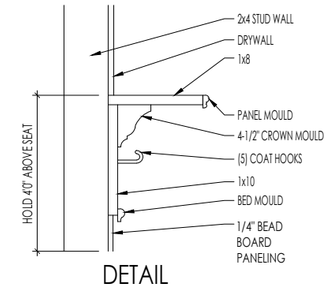

DETAIL

SCALE: 1/2" = 1'-0"

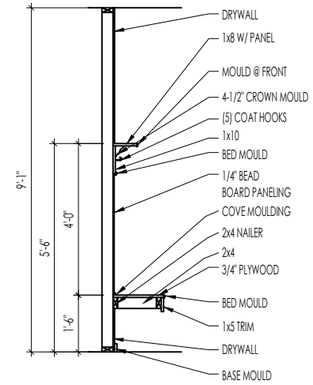

SECTION

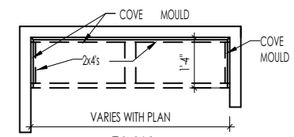

PLAN

F
D2.2

BENCH SEAT DETAILS

SCALE: AS NOTED

The Drees Company
09/09/2025 3:14:01 PM

SHEET NO. D2.2

DRAWN BY: ARCH

DATE OF DETAIL: 01/27/15

LAST REVISION: Jan 10, 2023 - 1:47pm

STANDARD FRAMING DETAILS
RALEIGH DIVISION
SCALE: AS NOTED

Drees HOMES SM

Copyright © 2022 The Drees Company. All Rights Reserved. No portion of this material may be reproduced in any form or by any means, including photocopying, without the express written permission of The Drees Company. The Drees Company will rigorously prosecute any unauthorized use of this material.

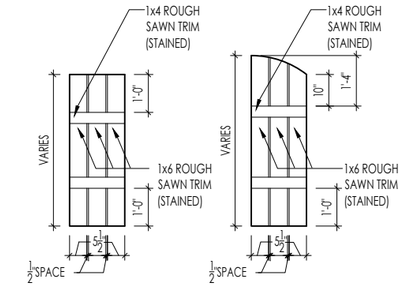

M
D2.4
SLAT SHUTTER DETAIL
SCALE: 1/4" = 1'-0"

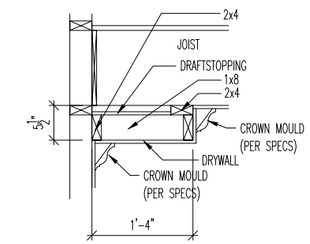

H
D2.4
SINGLE TRAY CEILING DETAIL
SCALE: 1/2" = 1'-0"

The Drees Company
09/09/2025 3:14:01 PM

SHEET NO. D2.4

DRAWN BY: ARCH
DATE OF DETAIL: 01/27/15
LAST REVISION: Jan 10, 2023 - 1:46pm

STANDARD FRAMING DETAILS
RALEIGH DIVISION
SCALE: AS NOTED

Drees HOMES SM

Copyright © 2022 The Drees Company. All Rights Reserved. No portion of this material may be reproduced in any form or by any means, including photocopying, without the express written permission of The Drees Company. The Drees Company will rigorously prosecute any unauthorized use of this material.

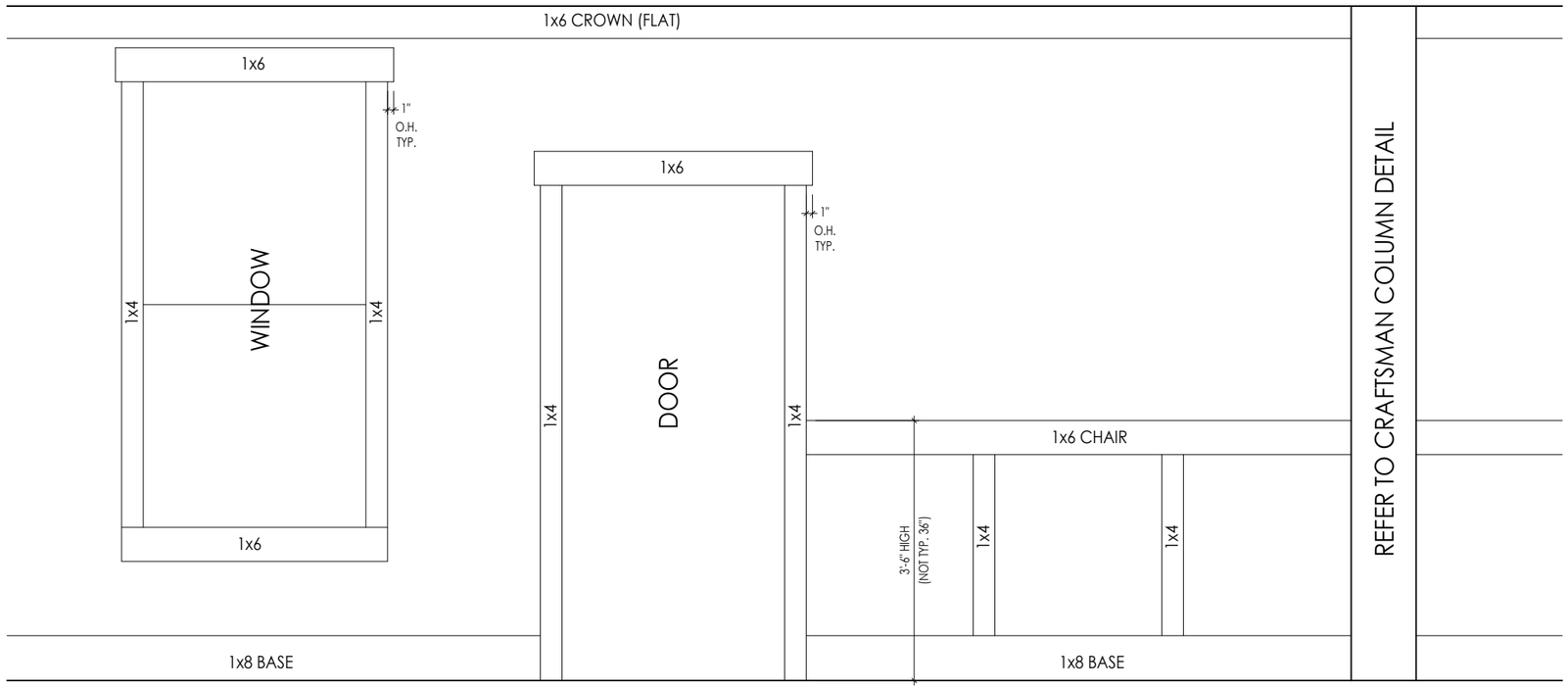

A
D2.5

CRAFTSMAN STYLE INTERIOR TRIM PACKAGE - ELEVATION

SCALE: 1/2" = 1'-0"

NORTH CAROLINA
REGISTERED
SEAL
12648
ARCHITECT
AMANDA K. SZOKE

The Drees Company
09/09/2025 3:14:01 PM

SHEET NO.
D2.5

DRAWN BY: ARCH
DATE OF DETAIL: 01/27/15
LAST REVISION: Jan 10, 2023 - 8:34am

STANDARD FRAMING DETAILS
RALEIGH DIVISION
SCALE: AS NOTED

Drees HOMES SM

Copyright © 2022, The Drees Company, All Rights Reserved. No portion of this material may be reproduced in any form or by any means, including photocopying, without the express written permission of the Drees Company. The Drees Company will vigorously prosecute any unauthorized use of this material.

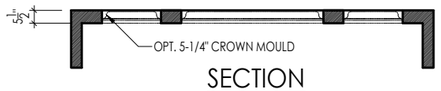

SECTION

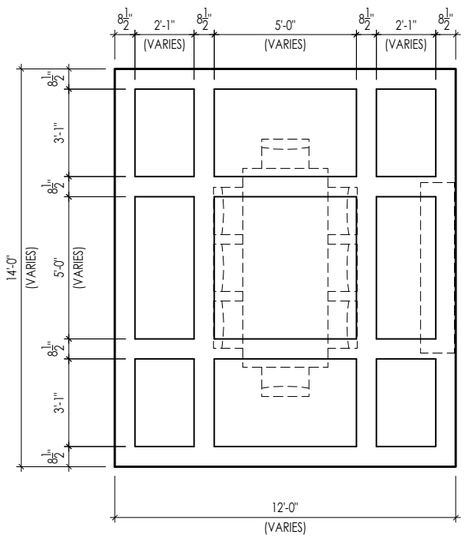

TYPICAL PLAN

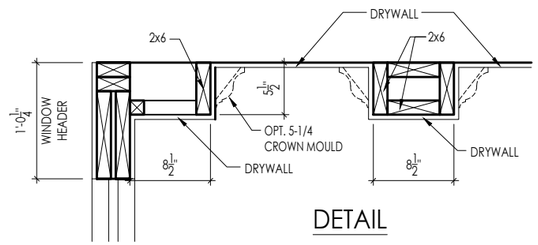

DETAIL

Note: Ceiling treatment details will tray down into space on enclosed rooms located on the 1st floor. On enclosed rooms on the 2nd floor, the ceiling treatment will tray up into the roof truss system. On 2-story spaces, the ceiling treatment will tray down into the space and require an appropriate sized header to capture the ceiling detail return.

01

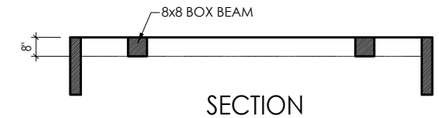

SECTION

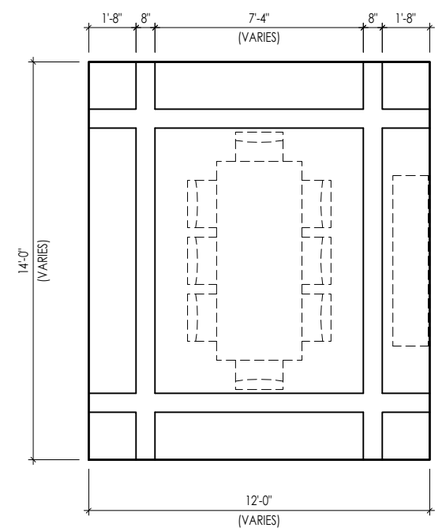

TYPICAL PLAN

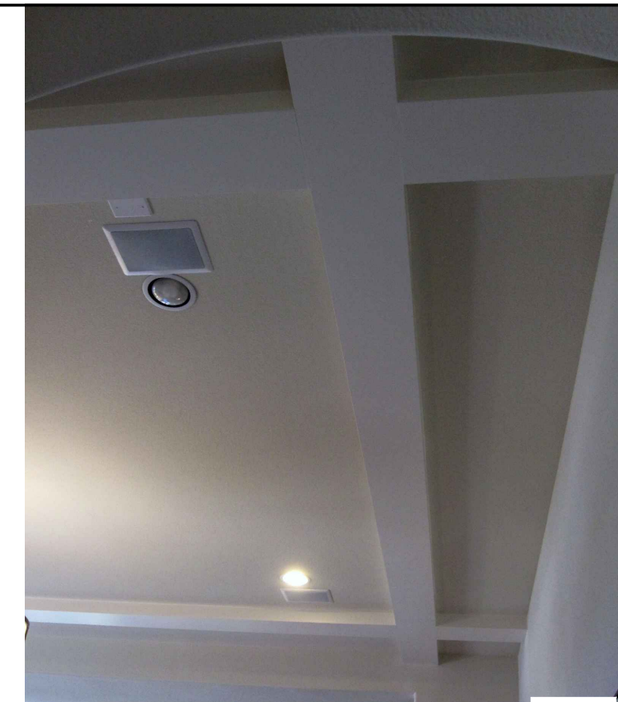

Note: Ceiling treatment details will tray down into space on enclosed rooms located on the 1st floor. On enclosed rooms on the 2nd floor, the ceiling treatment will tray up into the roof truss system. On 2-story spaces, the ceiling treatment will tray down into the space and require an appropriate sized header to capture the ceiling detail return.

05

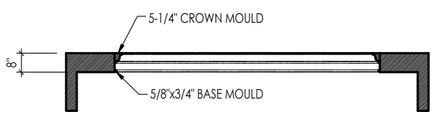

SECTION

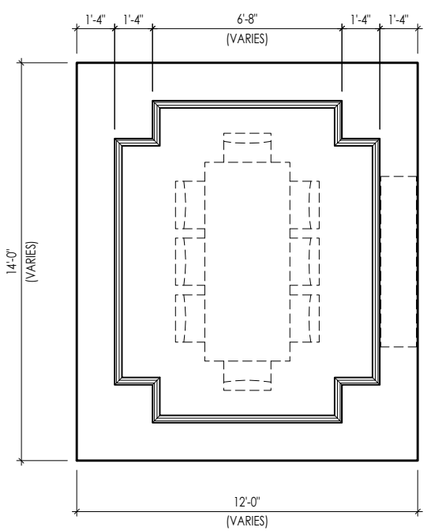

TYPICAL PLAN

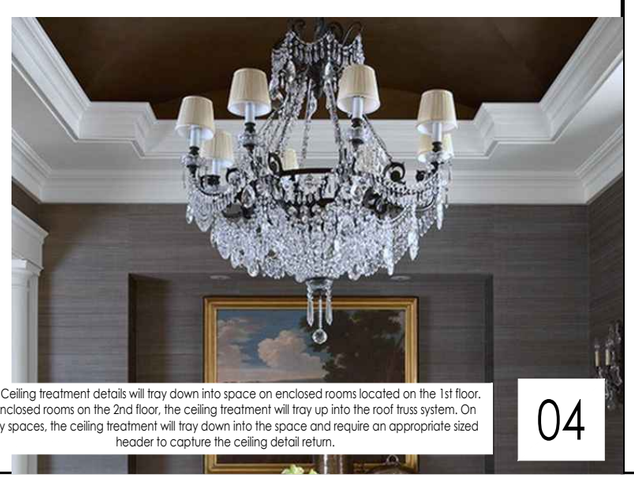

Note: Ceiling treatment details will tray down into space on enclosed rooms located on the 1st floor. On enclosed rooms on the 2nd floor, the ceiling treatment will tray up into the roof truss system. On 2-story spaces, the ceiling treatment will tray down into the space and require an appropriate sized header to capture the ceiling detail return.

04

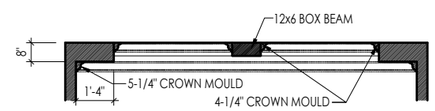

SECTION

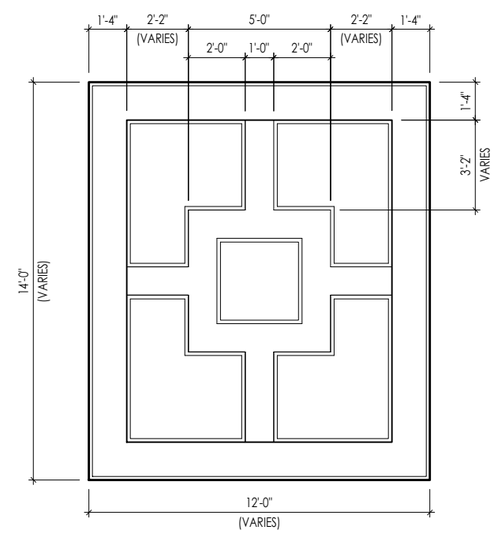

TYPICAL PLAN

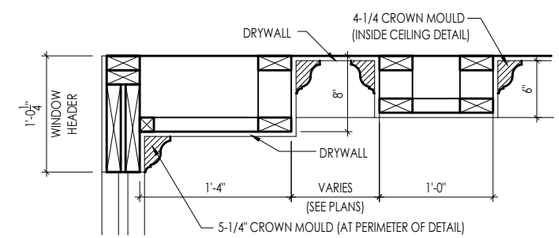

DETAIL

NORTH CAROLINA REGISTERED SEAL 12648 ARCHITECT AMANDA K. SZOKE

The Drees Company
09/09/2025 3:14:01 PM

Note: Ceiling treatment details will tray down into space on enclosed rooms located on the 1st floor. On enclosed rooms on the 2nd floor, the ceiling treatment will tray up into the roof truss system. On 2-story spaces, the ceiling treatment will tray down into the space and require an appropriate sized header to capture the ceiling detail return.

15

SHEET NO. D4.1

DRAWN BY: BLC
DATE OF DETAIL: 01/27/15
LAST REVISION: Jan 10, 2023 - 1:42pm

CEILING TREATMENTS

SCALE: AS NOTED

Drees HOMES SM

Copyright © 2022, The Drees Company, All Rights Reserved. No portion of this material may be reproduced in any form or by any means, including photocopying, without the express written permission of the Drees Company. The Drees Company will aggressively prosecute any unauthorized use of this material.

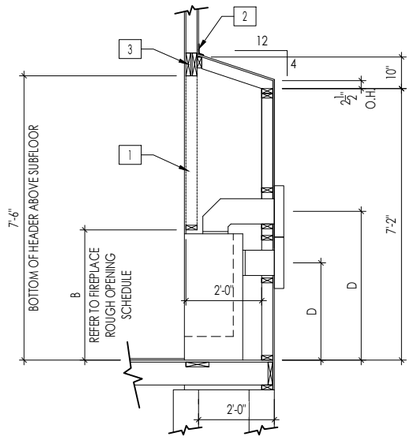

FRAMEWRAP
(SHOWN WITHOUT OPT. HEARTH)

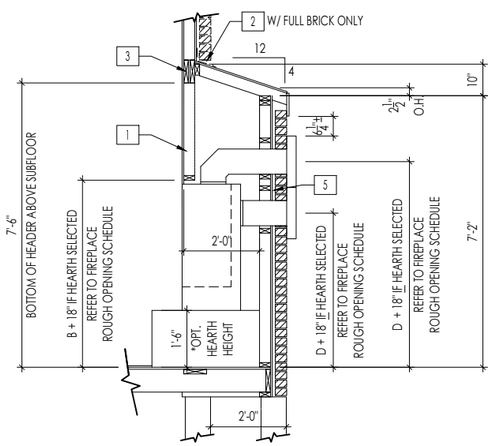

BRICKWRAP
(SHOWN WITH OPT. HEARTH)

FIREPLACE DOGHOUSE SECTIONS

SCALE: 1/4" = 1'-0"

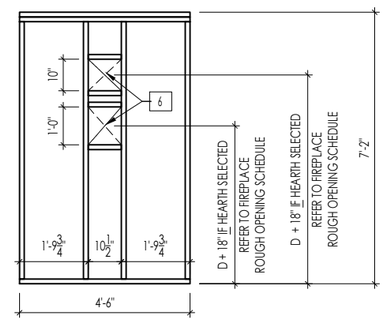

WITH HEARTH

DIRECT VENT REAR WALL FRAMING

SCALE: 1/4" = 1'-0"

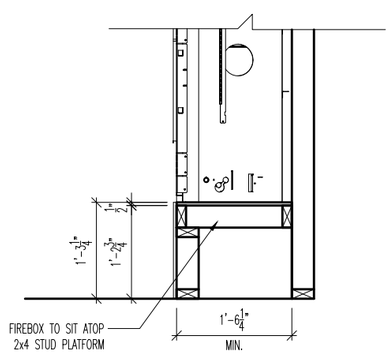

RAVE FIREPLACE PLATFORM DETAIL

SCALE: 1/2" = 1'-0"

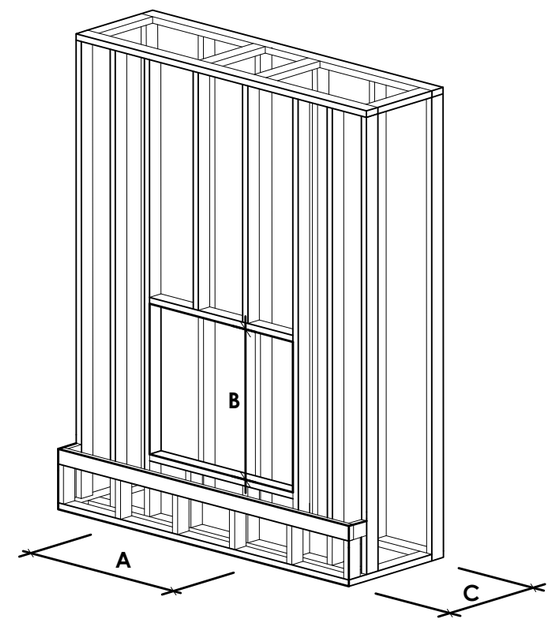

NOTE:
PROVIDE OSB SHEATHING WHEN
STONE VENEER SELECTED

FIREPLACE ROUGH OPENING SCHEDULE

FIREPLACE MANUFACTURER	MODEL	A	B	C	D
		(FIREBOX REQUIRED WIDTH)	(FIREBOX REQUIRED HEIGHT) *ADD 18" W/ OPT. HEARTH	(FIREBOX REQUIRED DEPTH - INTERIOR REAR WALL TO FRONT EXTERIOR WALL)	(VENT CENTERLINE HEIGHT) *ADD 18" W/ OPT. HEARTH
HEAT & GLO	SLIMLINE SL-7	42"	38-1/4"	16-1/4"	TOP 40" SIDE 26-7/8"
	COSMO 42	49"	32-3/4"	17-3/4"	TOP ONLY 47-1/16"
	NOVUS 33	39"	34-7/8"	19-5/8"	TOP 40" SIDE 23-1/2"
HEARTH & HOME	COURTYARD 36	43-3/8"	44-1/8"	18-3/8"	SEE MANUFACTURER'S SPECS
	COURTYARD 42	48-1/2"	34-1/4"	20-1/4"	SEE MANUFACTURER'S SPECS
	LANAI *(NOT IN CINCY/NKY)	57-3/4"	39-1/2"	17-5/8"	SEE MANUFACTURER'S SPECS
	RAVE	49"	32-3/4" *RAISED 15-1/4"*	18-1/4"	TOP ONLY 46-1/2"
		all dimensions are in inches			

General Notes

1. REFER TO SHEET 0N.1 FOR GENERAL NOTES.
2. VERIFY FIREPLACE MODEL AND HEARTH SELECTION WITH CUSTOMER'S SELECTIONS.

Key Notes

1. FUTURE FRAMING FOR F.P. OPENING AFTER INSULATION HAS BEEN INSTALLED IN EXT. WALLS
2. FLASHING
3. HEADER PER PLAN
4.
5. 1" AIRSPACE
6. BOX OUT FOR FLUE (REFER TO SELECTIONS FOR FIREPLACE AND OPENING HEIGHT)

The Drees Company
09/09/2025 3:14:01 PM

Drees HOMES

The Drees Company
211 Grandview Drive Fort Mitchell, Kentucky 41017 PH:(859) 578-4200

Copyright © 2021, (2021) The Drees Company. All Rights Reserved. No portion of this material may be reproduced in any form or by any means, including photocopying, without the express written permission of the Drees Company. The Drees Company will vigorously prosecute any unauthorized use of this material.

FIREPLACE DETAILS

Std. Drawn By:	MRPH	Sheet Description: FIREPLACE DETAIL — SCALE: VARIES
Std. Date:	02.29.20	
Date of Last Rev:	7.10.2023	g:\architecture\cincinnati\cinfi standard drawings\fireplace\fireplace detail sheets.dwg

Sheet No.
F-1

LAST REVISED 3/18/13

RALEIGH WINDOW SCHEDULE

* MEETS EMERGENCY ESCAPE & RESCUE OPENING REQUIREMENTS

Drees General Callout	Window Type	MI Windows and Doors Capitol Series			
		Call No.	Rough Opening	Call No.	Rough Opening
1660	SINGLE/DOUBLE HUNG	CW3500 1/8 x 6/0	20" x 60-1/4"		
1670	SINGLE/DOUBLE HUNG	CW3500 1/8 x 7/0	20" x 84"		
1860	SINGLE/DOUBLE HUNG	CW3500 1/8 x 6/0	20" x 60-1/4"		
2030	SINGLE/DOUBLE HUNG	CW3500 2/0 x 3/0	24" x 36"		
2040	SINGLE/DOUBLE HUNG	CW3500 2/0 x 4/0	24" x 48"		
2050	SINGLE/DOUBLE HUNG	CW3500 2/0 x 5/0	24" x 60-1/4"		
2060	SINGLE/DOUBLE HUNG	CW3500 2/0 x 6/0	24" x 72"		
2070	SINGLE/DOUBLE HUNG	CW3500 2/0 x 7/0	24" x 84"		
2430	SINGLE/DOUBLE HUNG	CW3500 2/4 x 3/0	28" x 36"		
2440	SINGLE/DOUBLE HUNG	CW3500 2/4 x 4/0	28" x 48"		
2450	SINGLE/DOUBLE HUNG	CW3500 2/4 x 5/0	28" x 60-1/4"		
2460	SINGLE/DOUBLE HUNG	CW3500 2/4 x 6/0	28" x 72"		
2830	SINGLE/DOUBLE HUNG	CW3500 2/8 x 3/0	32" x 36"		
2840	SINGLE/DOUBLE HUNG	CW3500 2/8 x 4/0	32" x 48"		
2850	SINGLE/DOUBLE HUNG	CW3500 2/8 x 5/0	32" x 60-1/4"		
* 2860	SINGLE/DOUBLE HUNG	CW3500 2/8 x 6/0	32" x 72"		
3030	SINGLE/DOUBLE HUNG	CW3500 3/0 x 3/0	36-1/4" x 36"		
3040	SINGLE/DOUBLE HUNG	CW3500 3/0 x 4/0	36-1/4" x 48"		
* 3050	SINGLE/DOUBLE HUNG	CW3500 3/0 x 5/0	36-1/4" x 60-1/4"		
* 3060	SINGLE/DOUBLE HUNG	CW3500 3/0 x 6/0	36-1/4" x 72"		
* 3070	SINGLE/DOUBLE HUNG	CW3500 3/0 x 7/0	36-1/4" x 84"		
* 3470	SINGLE/DOUBLE HUNG	CW3500 3/4 x 7/0	40" x 84"		
1050 FIXED		910T 5/0 x 1/0	59-5/8" x 11-1/2"		
1640 FIXED		910T 4/0 x 1/8	47-1/4" x 19-1/2"		
2020 FIXED		CW3500 2/0 x 2/0	24" x 24"		
2030 FIXED		CW3500SL 2/0 x 3/0	24" x 36"		
2040 FIXED		CW3500SL 2/0 x 4/0	24" x 48"		
2050 FIXED		CW3500SL 2/0 x 5/0	24" x 60-1/4"		
2816 FIXED		910TSL 2/6 x 1/8	29-1/4" x 19-1/2"		
2860 FIXED		CW3500 3/0 x 6/0	36" x 72"		
3016 FIXED		910TSL 3/0 x 1/8	35-1/4" x 19-1/2"		
3020 FIXED		910TSL 3/0 x 2/0	35-1/4" x 23-1/2"		
3030 FIXED		CW3500P 3/0 x 3/0	36-1/4" x 36"		
3040 FIXED		CW3500P 3/0 x 4/0	36-1/4" x 48"		
3050 FIXED		CW3500P 3/0 x 5/0	36-1/4" x 60-1/4"		
3060 FIXED		CW3500P 3/0 x 6/0	36-1/4" x 72"		
3070 FIXED		CW3500P 3/0 x 7/0	36-1/4" x 84"		
4010 FIXED		910T 4/0 x 1/0	47-1/4" x 11-1/2"		
4020 FIXED		910T 4/0 x 2/0	47-1/4" x 23-1/2"		
4030 FIXED		CW3500P 4/0 x 3/0	48" x 36"		
4040 FIXED		CW3500P 4/0 x 4/0	48" x 48"		
4044 FIXED		CW3500P 4/0 x 4/4	48" x 52"		
4050 FIXED		CW3500P 4/0 x 5/0	48" x 60-1/4"		
4060 FIXED		CW3500P 4/0 x 6/0	48" x 72"		
4070 FIXED		CW3500P 4/0 x 7/0	48" x 84"		
5030 FIXED		CW3500P 5/0 x 3/0	60" x 36"		
5040 FIXED		CW3500P 5/0 x 4/0	60" x 48"		
5060 FIXED		CW3500P 5/0 x 6/0	60" x 72"		
5070 FIXED		CW3500P 5/0 x 7/0	60" x 84"		
6020 FIXED		910T 6/0 x 2/0	71-5/8" x 23-1/2"		
6050 FIXED		CW3500P 6/0 x 5/0	72" x 60-1/4"		
6060 FIXED		CW3500P 6/0 x 6/0	72" x 72"		
3'-0" HALF ROUND		CW3500 3/0 HC	36-1/4"		
4'-0" HALF ROUND		CW3500 3/0 HC	48"		
5'-0" HALF ROUND		CW3500 3/0 HC	60"		
2020 OCTAGON		CW3500 2/0 OCT	24"		
2'-4" QUARTER ROUND		CW3500 2/4 QC	28"		
3'-0" QUARTER ROUND		CW3500 3/0 QC	36-1/4"		

Drees General Callout				
	Call No.	Rough Opening	Call No.	Rough Opening

Drees HOMES SM

Drees Homes

7701 Six Forks Road, Suite 132, Raleigh, NC 27615 PH:(919) 844-9288

Copyright © 2008, (2013) The Drees Company. All Rights Reserved. No portion of this material may be reproduced in any form or by any means, including photocopying, without the express written permission of the Drees Company. The Drees Company will vigorously prosecute any unauthorized use of this material.

Sheet Description:

WINDOW SCHEDULE

.

Sheet No.

SC-01

MOULDED MILLWORK SCHEDULE

LAST REVISED 11/22/17

HEADERS

Drees General Callout	Nuwood	Fypon
ARCHED HEADER D1	H8xxEFR	N/A
ARCHED HEADER D1K	H8xxEFKR	N/A
ARCHED HEADER D2	H8xxEFTR	N/A
ARCHED HEADER D2K	H8xxEFTKR	N/A
ARCHED HEADER D3	AH10xx	WCHSEGxxX10
ARCHED HEADER D3K	N/A	WCHSEGxxX10K
ARCHED HEADER D4	AR5xx	ARxxX6M
ARCHED HEADER D4K	AR5xxK	ARxxX6MK
ARCHED HEADER D5	AR10xxEC	ARxxX6METAR6C
ARCHED HEADER D5K	AR10xxECK	ARxxX6METAR6CK
ARCHED HEADER D6	AR10xxC	ARxxX10MC
ARCHED HEADER D6K	AR10xxCK	ARxxX10MCK
ARCHED HEADER D7K	H7xxEF-4K	N/A
ARCHED HEADER D8	AR14xxC	ARxxX14MC
ARCHED HEADER D8K	AR14xxCK	ARxxX14MCK
ARCHED HEADER D9	H9xxE	WCHARSxx13
CROSSHEAD A1	H9xx	WCHxxX9N
CROSSHEAD A1K	H9xxK	WCHxxX9NK
CROSSHEAD B1	H14xxBT	WCHxxX14BT
CROSSHEAD B1K	H14xxBTK	WCHxxX14BTK
CROSSHEAD B2	H12xx	WCHxxX12
CROSSHEAD B2K	H12xxK	WCHxxX12K
CROSSHEAD C1	H18xxBT	WCHxxX14BT
CROSSHEAD C1K	H18xxBTK	WCHxxX14BTK
CROSSHEAD C2	H18xxBT-PA	LDCHxxX18
CROSSHEAD C2K	H18xxBTK-PA	LDCHxxX18K
CROSSHEAD Z-E1-HDR	Z-E1-HDR	Z-E1-HDR
CROSSHEAD Z-E2-HDR	Z-E2-HDR	Z-E2-HDR
CROSSHEAD Z-E3-HDR	Z-E3-HDR	Z-E3-HDR
CROSSHEAD Z-E3-ARCHHDR	Z-E3-ARCHHDR	Z-E3-ARCHHDR
CROSSHEAD Z-E3-CLHDR	Z-E3-CLHDR	Z-E3-CLHDR
CROSSHEAD Z-E5-HDR	Z-E5-HDR	Z-E5-HDR
WINDOW HEADER A1	H6xx	WCHxxX6
WINDOW HEADER A1K	H6xxK	WCHxxX6K
WINDOW HEADER B1	H9xx-2	WCHxxX9N
WINDOW HEADER B1K	H9xx-2K	WCHxxX9NK
WINDOW HEADER B2	H9xxBT	WCHxxX10NBT
WINDOW HEADER B2K	H9xxBTK	WCHxxX10NBTK
WINDOW HEADER C1	H9xx	CCAxxX10
WINDOW HEADER C1K	H9xxK	CCAxxX10K
WINDOW HEADER C2	H9xxT	WCHxxX9T
WINDOW HEADER C2K	H9xxTK	WCHxxX9TK
WINDOW HEADER C3	H12xxBT	WCHxxX10BT
WINDOW HEADER C3K	H12xxBTK	WCHxxX10BTK
WINDOW HEADER C4	H14xxBT	WCHxxX14BT
WINDOW HEADER D1	H7xxF-4	N/A
WINDOW HEADER D1K	H7xxF-4K	N/A
WINDOW HEADER D2K	H9xxK-1	N/A
WINDOW HEADER Z-W1	Z-W1	Z-W1
WINDOW HEADER Z-W3	Z-W3	Z-W3
WINDOW HEADER Z-W3K	Z-W3K	Z-W3K
WINDOW HEADER Z-W3D	Z-W3D	Z-W3D
WINDOW HEADER Z-W4	Z-W4	Z-W4
WINDOW HEADER Z-W4K	Z-W4K	Z-W4K

PILASTERS

Drees General Callout	Nuwood	Fypon
FLUTED PILASTER A1	PL7xxF	PIL7Xxx
FLUTED PILASTER B1	PL9xxF	PIL9Xxx
FLUTED PILASTER C1	PL11xxFM	PIL11Xxx
PANEL PILASTER A2	PL7xxP	PIL7XxxDP
PANEL PILASTER B2	PL9xxP	PIL9XxxDP
PANEL PILASTER C2	PL11xxPM	PIL11XxxDP
PILASTER D1	M311-9	PIL10XxxA
PILASTER D2	M323-9	N/A
PILASTER Z-E1-PIL	Z-E1-PIL	Z-E1-PIL
PILASTER Z-E2-PIL	Z-E2-PIL	Z-E2-PIL
PILASTER Z-E3-PIL	Z-E3-PIL	Z-E3-PIL
PILASTER Z-PIL-EXT	Z-PIL-EXT	Z-PIL-EXT
PLAIN PILASTER A3	PL7xxS	PIL7XxxP
PLAIN PILASTER B3	PL9xxS	PIL9XxxP
PLAIN PILASTER C3	PL11xxS	PIL11XxxP
PLINTH D1	PF10	ADD "P" TO END OF PILASTER
PLINTH D2	P14.5	N/A

LOUVERS

Drees General Callout	Nuwood	Fypon	Mid-America
CATHEDRAL LOUVER D1	CLV1224	CLV12X24	--
CATHEDRAL LOUVER D1T	CLV1224TRIM4	CLV12X24X4F	--
CATHEDRAL LOUVER D2	CLV1432	CLV14X32	--
CATHEDRAL LOUVER D2T	CLV1432TRIM4	CLV14X32X4F	00 44 1422
CATHEDRAL LOUVER D3	CLV2232	CLV22X32	--
CATHEDRAL LOUVER D3T	CLV2232TRIM4	CLV22X32X4F	--
HALF CIRCLE LOUVER D1	HRLV32	HRLV32X16	--
HALF CIRCLE LOUVER D1T	HRLV32TRIM4	HRLV32X4F	--
HALF CIRCLE LOUVER D2	HRLV36	HRLV36X18	--
HALF CIRCLE LOUVER D2T	HRLV36TRIM4	HRLV36X4F	00 43 2234
OCTAGONAL LOUVER D1	OLV24	OLV24	--
OCTAGONAL LOUVER D12	OLV24TRIM4	OLV24X4F	--
OVAL LOUVER D1	OLV2537	OLV37X25	--
OVAL LOUVER D1T	OLV2537TRIM4	OLV37X25X4F	--
RECTANGUAR LOUVER D1	LV1224V	LV12X24	00 45 1218
RECTANGUAR LOUVER D1T	LV1224VTRIM4	LV12X24-4F	00 45 1218
RECTANGUAR LOUVER D2	LV1636V	LV16X36	--
RECTANGUAR LOUVER D2T	LV1636VTRIM4	LV16X36-4F	--
RECTANGUAR LOUVER D3	LV2436V	LV24X36	--
RECTANGUAR LOUVER D3T	LV2436VTRIM4	LV24X36-4F	--
RECTANGUAR LOUVER D4	LV2424V	LV24X24	--
RECTANGUAR LOUVER D4T	LV2424VTRIM4	LV24X24-4F	--
ROUND LOUVER D1	RLV18	RLV18	--
ROUND LOUVER D1T	RLV18TRIM4	RLV18X4F	--
ROUND LOUVER D2	RLV22	RLV22	--
ROUND LOUVER D2T	RLV22TRIM4	RLV22X4F	--
TRIANGULAR LOUVER D1	--	TRLVxxX36	00 47 0x0x

BRACKETS

Drees General Callout	Nuwood	Fypon
EXTERIOR BRACKET D1	BR437	N/A
EXTERIOR BRACKET D2	DB102	DTLB6X4X6
EXTERIOR BRACKET D3	BR304 (7" WIDE)	BKT24X24X7
EXTERIOR BRACKET D4	BR455	N/A
EXTERIOR BRACKET D5	BR300-1	BKT12X12X6
EXTERIOR BRACKET D6	BR300	BKT12X12
EXTERIOR BRACKET D7	BR409	BKT16X18X3
EXTERIOR BRACKET D8	BR413	DTLB5X5X3
EXTERIOR BRACKET D9	TBD	BKT11X20
EXTERIOR BRACKET D10	TBD	BKT12X24X3
EXTERIOR BRACKET D11	BR435	BKT25X27
EXTERIOR BRACKET D12	BR404	BKT16X30X4
EXTERIOR BRACKET D13	BR23.13x10.13x5.5	N/A
GABLE BRACKET D1	TBD	DTLB6X4X6R(OR L)PITCH
GABLE BRACKET D2	BR423-x:12	BKT5X20
GABLE BRACKET D3	BR424-x:12	BKT5X20 (CUT 2" PROJECTION)

MOULDINGS

Drees General Callout	Nuwood	Fypon
BAND MOULD D1	M210-16	MLD612-12
BAND MOULD D2	M301-16	MLD220-16
BARGE MOULD D1	WM210	WM210
CASE MOULD D1	M320-16	MLD226-16
CASE MOULD D2	N/A	MLD244-12
CROWN MOULD D1	M404-16	MLD572-16
DENTIL MOULD D1	M105-16	MLD310-16
DENTIL MOULD D2	M108-8	MLD353-8
HALF ROUND MOULD D1	N/A	MLD605-12
PANEL MOULD D1	M310-8 OR 16	MLD612-12

PEDIMENTS / COMBO HEADERS

Drees General Callout	Nuwood	Fypon
BROW COMBO D1	BCxx	CSAPxx
PEAK PEDIMENT D1	Pxx-4 (6:12)	PCPxx
PEAK PEDIMENT Z-E1-PED	Z-E1-PED	Z-E1-PED
PEAKED COMBO D1	PCxx-4	CPCPxx
RAMS HEAD PEDIMENT D1	Rxx	RHPxx00
ROUND PEDIMENT D1	Bxx-4	PSPxx
SUNRISE COMBO D1	SCxx-4	CSPxx
VICTORIAN PEDIMENT D1	VPxx	DVPxx w/ SWDHxxXxx

WINDOW DECORATION

Drees General Callout	Nuwood	Fypon
HALF CIRCLE SUNBURST D1	SPxxxx	SWDHxxXxx
PALLADIAN WINDOW D1	H9AR10-xx xx" FL/FR	ARxxX10MFLxxx
PALLADIAN WINDOW D1K	H9AR10-xxK xx" FL/FR	ARxxX10MFLxxx with K10TM
PALLADIAN WINDOW D2	H9AR10SPxxxx	ARxxX10MFLxxx with SWDHxxXxx
PALLADIAN WINDOW D2K	H9AR10SPxxxxK	ARxxX10MFLxxx with SWDHxxXxx and K10TM
PEAKED CAP HEADER D1	N/A	CHPCxxX15
PLAIN SEGMENT D1	SPxxxxP	PSPxx
SEGMENT SUNBURST D1	SPxxxx	SWDHxxXxx

ACCESSORIES

Drees General Callout	Nuwood	Fypon
GABLE D1	PGDx12	GPA (width X height)
KEYSTONE D1	KY14F-3	KY14
KEYSTONE D2	KYHM9F	K9M
WREATH D1	N/A	WAB34

Drees HOMES

Copyright © 2008, (2017) The Drees Company. All Rights Reserved. No portion of this material may be reproduced in any form or by any means, including photocopying, without the express written permission of the Drees Company. The Drees Company will vigorously prosecute any unauthorized use of this material.

Sheet Description:

MOULDED MILLWORK SCHEDULE

Sheet No.

SC-02