EXPRESS HOMES
40' SERIES
MODEL 'BELHAVEN' - LH
EXPRESS DRH-E
A, B, C / D, E, F

Cross Creek
Lot 25
Spring Lake, NC 28390

ABBREVIATIONS

ABV	ABOVE
A/C	AIR CONDITIONING
A.D.	AREA DRAIN
ADJ	ADJUSTABLE
ALT	ALTERNATE
ALUM	ALUMINUM
ARCH.	ARCHITECTURAL
BA	BATHROOM
BD	BOARD
BF	BI-FOLD (DOOR)
BLDG	BUILDING
BLK	BLOCK (CMUs)
BLW	BELOW
BM	BEAM
BP	BI-PASS (DOOR)
BOT	BOTTOM
BTWN	BETWEEN
CAB	CABINET
CER	CERAMIC
C.J.	CONTROL JOINT OR CONSTRUCTION JOINT
CL	CLOSET OR CENTER LINE
CLG	CEILING
CLR	CLEAR
CMU	CONCRETE MASONRY UNIT
COL	COLUMN
CONC	CONCRETE
C	CARPET
CR	CORROSION RESISTANT
CSMT	CASEMENT
C.T.	CERAMIC TILE
D	DRYER
DBL	DOUBLE
DH	DOUBLE HUNG
DIM	DIMENSION
DISP	DISPOSAL
DN	DOWN
DR	DOOR
DS	DOWNSPOUT
DW	DISH WASHER
DWG	DRAWING
E	EAST
EA	EACH
ELEV	ELEVATION
ELEC.	ELECTRICAL
EQ	EQUAL
EXT	EXTERIOR
FAU	FORCED AIR UNIT
F.C.	FLOOR CHANGE
F.D.	FLOOR DRAIN
FFL	FINISH FLOOR LINE
F.G.	FINISHED GRADE
FLR	FLOOR(ING)
FL	FLOURESCENT (LIGHT)
FND	FOUNDATION
F.O.S.	FACE OF STUD
FTG	FOOTING
FX	FIXED GLASS
GALV	GALVANIZED
GAR	GARAGE
G.B.	GYPSUM BOARD
GD	GRADE OR GRADING
G.D.O.	GARAGE DOOR OPENER
GFI	GROUND FAULT INTERRUPTER
GL	GLASS OR GLAZING
GYP BD	GYPSUM BOARD
HB	HOSE BIBB
HD	HEAD OR HARD
HDR	HEADER
HGT	HEIGHT
HVAC	HEATING/VENTILATING/AIR COND.
HWD	HARDWOOD
INT	INTERIOR
JST	JOIST
JT	JOINT
KIT	KITCHEN
L	LENGTH
LA	LAUNDRY
LAV	LAVATORY
LVR	LOUVER
MAX	MAXIMUM
MECH	MECHANICAL
MFR.	MANUFACTURER
MIN	MINIMUM
MISC	MISCELLANEOUS
N	NORTH
N.T.S.	NOT TO SCALE
O.S.D.	OVERHEAD GARAGE DOOR
OH	OVERHEAD
OPT	OPTIONAL
PAR	PARALLEL
P.B.	PUSH BUTTON
PDR	POWDER
PED	PEDESTAL
PL	PLATE
PR	PAIR
P.T.	PRESSURE TREATED WOOD
PVC	POLYVINYL CHLORIDE PIPE
PVMT	PAVEMENT
P.W.	PRE-WIRE
PWD	PLYWOOD
R	RISER
RAG	RETURN AIR GRILL
REF	REFERENCE
REFR	REFRIGERATOR
REQ	REQUIRED
S	SOUTH
SD	SMOKE DETECTOR
S.F.	SQUARE FEET
S.G.D.	SLIDING GLASS DOOR
SH	SINGLE HUNG OR SHELF
SIM	SIMILAR
SL	SLOPE / SLIDING
S&P	SHELF AND POLE
SPEC	SPECIFICATIONS
STD	STANDARD
STR	STRUCTURAL
SQ	SQUARE
SYM	SYMBOL
S4S	SMOOTH FOUR SIDES
T	TREAD (AT STAIRS) OR TILE
T.B.	TOWEL BAR
TEMP.	TEMPERED (GLASS)
T&G	TONGUE & GROOVE
T.O.C.	TOP OF CURB
TV	TELEVISION
TYP	TYPICAL
U.N.O.	UNLESS NOTED OTHERWISE
V.B.	VAPOR BARRIER
VERT	VERTICAL
V.T.R.	VENT THRU ROOF
W	WASHING MACHINE
WD	WOOD
WDW	WINDOW
WH	WATER HEATER
WI	WROUGHT IRON
WIC	WALK-IN CLOSET
W/ W/O	WITH OR WITHOUT
WP	WATERPROOF(ING)
WWM	WELDED WIRE MESH
PL	PROPERTY LINE
Ø	ROUND / DIAMETER
&	AND
℄	CENTERLINE
#	POUND / NUMBER

BUILDING CODE COMPLIANCE / PROJECT INFORMATION

ALL CONSTRUCTION TO COMPLY WITH LOCAL CODES AND ORDINANCES CURRENTLY IN USE WITH THE LOCAL JURISDICTION.

APPLICABLE CODES:
FOLLOW ALL APPLICABLE STATE AND LOCAL CODES.
2018 NORTH CAROLINA STATE SUPPLEMENTS AND AMENDMENTS

CONTRACTOR AND BUILDER SHALL REVIEW ENTIRE PLAN TO VERIFY CONFORMANCE WITH ALL CURRENT APPLICABLE CODES IN EFFECT AT TIME OF CONSTRUCTION. BY USING THESE DRAWINGS FOR CONSTRUCTION IT IS UNDERSTOOD THAT CONFORMANCE WITH ALL APPLICABLE CODES IS THE RESPONSIBILITY OF THE BUILDER AND CONTRACTOR.

PRODUCT:
SINGLE FAMILY RESIDENCE

OCCUPANCY CLASSIFICATION
RESIDENTIAL R-3

CONSTRUCTION TYPE:
TYPE VB

INDEX

MODEL 'BELHAVEN'

0	TITLE SHEET / COVER SHEET
0.1	QUICK VIEW
1 A	FRONT ELEVATION 'A'
1.1 A	ROOF PLAN 'A'
2 A	SIDE AND REAR ELEVATIONS 'A'
2.1 A	SIDE AND REAR ELEVATIONS 'A'- W/ BASEMENT
3 MS A	MONOLITHIC SLAB PLAN 'A'
3 SW A	STEM WALL PLAN 'A'
3 BS A	BASEMENT PLAN 'A'
4 A	1ST FLOOR PLAN 'A'
5 A	2ND FLOOR PLAN 'A'
1 B	FRONT ELEVATION 'B'
1.1 B	ROOF PLAN 'B'
2 B	SIDE AND REAR ELEVATIONS 'B'
2.1 B	SIDE AND REAR ELEVATIONS 'B'- W/ BASEMENT
3 MS B	MONOLITHIC SLAB PLAN 'B'
3 SW B	STEM WALL PLAN 'B'
3 BS B	BASEMENT PLAN 'B'
4 B	1ST FLOOR PLAN 'B'
5 B	2ND FLOOR PLAN 'B'
1 C	FRONT ELEVATION 'C'
1.1 C	ROOF PLAN 'C'
2 C	SIDE AND REAR ELEVATIONS 'C'
2.1 C	SIDE AND REAR ELEVATIONS 'C'- W/ BASEMENT
3 MS C	MONOLITHIC SLAB PLAN 'C'
3 SW C	STEM WALL PLAN 'C'
3 BS C	BASEMENT PLAN 'C'
4 C	1ST FLOOR PLAN 'C'
5 C	2ND FLOOR PLAN 'C'
1 D	FRONT ELEVATION 'D'
1.1 D	ROOF PLAN 'D'
2 D	SIDE AND REAR ELEVATIONS 'D'
2.1 D	SIDE AND REAR ELEVATIONS 'D'- W/ BASEMENT
3 MS D	MONOLITHIC SLAB PLAN 'D'
3 SW D	STEM WALL PLAN 'D'
3 BS D	BASEMENT PLAN 'D'
4 D	1ST FLOOR PLAN 'D'
5 D	2ND FLOOR PLAN 'D'
1 E	FRONT ELEVATION 'E'
1.1 E	ROOF PLAN 'E'
2 E	SIDE AND REAR ELEVATIONS 'E'
2.1 E	SIDE AND REAR ELEVATIONS 'E'- W/ BASEMENT
3 MS E	MONOLITHIC SLAB PLAN 'E'
3 SW E	STEM WALL PLAN 'E'
3 BS E	BASEMENT PLAN 'E'
4 E	1ST FLOOR PLAN 'E'
5 E	2ND FLOOR PLAN 'E'
1 F	FRONT ELEVATION 'F'
1.1 F	ROOF PLAN 'F'
2 F	SIDE AND REAR ELEVATIONS 'F'
2.1 F	SIDE AND REAR ELEVATIONS 'F'- W/ BASEMENT
3 MS F	MONOLITHIC SLAB PLAN 'F'
3 SW F	STEM WALL PLAN 'F'
3 BS F	BASEMENT PLAN 'F'
4 F	1ST FLOOR PLAN 'F'
5 F	2ND FLOOR PLAN 'F'
1 A S	BUILDING SECTIONS
1.1 A S	BUILDING SECTIONS
1.1.1 A S	BUILDING SECTIONS
6	BASEMENT UTILITY PLAN
7	1ST FLOOR UTILITY PLAN
8	2ND FLOOR UTILITY PLAN
62	ARCHITECTURAL SHEETS

ALL CONSULTANT DRAWINGS ACCOMPANYING THESE ARCHITECTURAL DRAWINGS HAVE NOT BEEN PREPARED BY OR UNDER THE DIRECTION OF GMD DESIGN GROUP, INC. GMD DESIGN GROUP INC. THEREFORE ASSUMES NO LIABILITY FOR THE COMPLETENESS OR CORRECTNESS OF THESE DRAWINGS.

PLAN CHANGES:

DATE:	DESCRIPTION:
03.06.23	FIRST SUBMITTAL

CONSULTANTS:

LOCAL JURISDICTION:	BUILDER:	DESIGNER:	STRUCTURAL ENGINEER:

NO:	DATE:	REVISION:
1	03.06.23	

PROFESSIONAL SEAL:

PROJECT TITLE:
40' Series

FOR CONSTRUCTION

CLIENTS NAME:
Express HOMES

PROJECT NO: GMD17044

SHEET TITLE:
TITLE SHEET

PRINT DATE:
March 06, 2023

SHEET NO:
0

GENERAL NOTES DESIGNER NORTH CAROLINA:

THESE DOCUMENTS ARE THE PROPERTY OF THE DESIGNER AND SHALL NOT BE COPIED, DUPLICATED, ALTERED, MODIFIED OR REVISED IN ANY WAY WITHOUT THE EXPRESSED WRITTEN APPROVAL OF THE DESIGNER.

CONTRACTOR SHALL VERIFY ALL CONDITIONS AND DIMENSIONS AT THE SITE AND ALL INCONSISTENCES SHALL BE BROUGHT TO THE ATTENTION OF THE DEVELOPER AND THE DESIGNER BEFORE PROCEEDING WITH WORK.

ANY ERRORS OR OMISSIONS FOUND IN THESE DRAWINGS SHALL BE BROUGHT TO DEVELOPERS AND DESIGNERS ATTENTION IMMEDIATELY.

DO NOT SCALE DRAWINGS. WRITTEN DIMENSIONS TAKE PRECEDENCE OVER SCALED DIMENSIONS.

ALL DIMENSIONS ARE TO FACE OF STUD OR TO FACE OF FRAMING UNLESS OTHERWISE NOTED.

ALL TRUSS DRAWINGS TO BE REVIEWED AND APPROVED BY THE STRUCTURAL ENGINEER PRIOR TO ISSUANCE OF BUILDING PERMIT.

ALL OR EQUAL SUBSTITUTIONS MUST BE SUBMITTED TO AND APPROVED BY CITY BUILDING OFFICIAL PRIOR TO INSTALLATION.

ALL ANGLED PARTITIONS ARE 45 DEGREES UNLESS OTHERWISE NOTED.

PROVIDE FIREBLOCKING. (PER LOCAL CODES.)

ALL ELECTRICAL AND MECHANICAL EQUIPMENT AND METERS ARE SUBJECT TO RELOCATION DUE TO FIELD CONDITIONS, CONTRACTOR TO VERIFY.

PROVIDE BLOCKING AND/OR BACKING AT ALL TOWEL BAR, TOWEL RING AND/OR TOILET PAPER HOLDER LOCATIONS, AS SHOWN PER PLAN. TYPICAL AT ALL BATHROOMS AND POWDER ROOMS. VERIFY LOCATIONS AT FRAMING WALK.

ELASTOMERIC SHEET WATERPROOFING: FURNISH AND INSTALL ALL WATERPROOFING COMPLETE. A 40 MIL. SELF-ADHERING MEMBRANE OF RUBBERIZED ASPHALT INTEGRALLY BONDED TO POLYETHYLENE SHEETING, OR EQUAL. INSTALL PER MANUFACTURE'S AND TRADE ASSOCIATION'S PRINTED INSTALLATION INSTRUCTIONS. 6" MINIMUM LAP AT ALL ADJACENT WALL SURFACES.

TO THE BEST OF THE DESIGNER'S KNOWLEDGE THESE DOCUMENTS ARE IN CONFORMANCE WITH THE REQUIREMENTS OF THE BUILDING AUTHORITIES HAVING JURISDICTION OVER THIS TYPE OF CONSTRUCTION AND OCCUPANCY.

SHOP DRAWING REVIEW AND DISTRIBUSTION, ALONG WITH PRODUCT SUBMITTALS, REQUESTED IN THE CONSTRUCTION DOCUMENTS, SHALL BE THE SOLE RESPONSIBILITY OF THE GENERAL CONTRACTOR, UNLESS DIRECTED OTHERWISE UNDER A SEPARATE AGREEMENT.

DEVIATIONS FROM THESE DOCUMENTS IN THE CONSTRUCTION PHASE SHALL BE REVIEWED BY THE DESIGNER AND THE OWNER PRIOR TO THE START OF WORK IN QUESTION. ANY DEVIATIONS FROM THESE DOCUMENTS WITHOUT PRIOR REVIEW, SHALL BE THE SOLE RESPONSIBILITY OF THE GENERAL CONTRACTOR.

THE GENERAL CONTRACTOR SHALL BE RESPONSIBLE FOR ALL WORK AND MATERIALS REPRESENTED ON THESE DOCUMENTS INCLUDING THE WORK AND MATERIALS FURNISHED BY SUBCONTRACTORS AND VENDORS.

THE BUILDER SHALL FURNISH ANY AND ALL REPORTS RECEIVED FROM THE GEOTECHNICAL ENGINEER (SOILS REPORT), ON THE STUDY OF THE PROPOSED SITE, TO THE DESIGNER, STRUCTURAL ENGINEER, AND GENERAL CONTRACTOR. IN THE EVENT THE GEOTECHNICAL REPORTS DO NOT EXIST, THE SOILS CONDITION SHALL BE ASSUMED TO BE A MINIMUM DESIGN SOIL PRESSURE STATED BY THE STRUCTURAL ENGINEER OF RECORD FOR THE PURPOSE OF STRUCTURAL DESIGN. GENERAL CONTRACTOR SHALL ASSURE THE SOIL CONDITIONS MEET OR EXCEED THE CRITERIA.

ALL WORK PERFORMED BY THE GENERAL CONTRACTOR SHALL COMPLY AND CONFORM WITH LOCAL AND STATE BUILDING CODES, ORDINANCES AND REGULATIONS, ALONG WITH ALL OTHER AUTHORITIES HAVING JURISDICTION. THE GENERAL CONTRCATOR IS RESPONSIBLE TO BE AWARE OF THESE REQUIREMENTS AND GOVERNING REGULATIONS.

PROVIDE AN APPROVED WASHER DRAIN PAN AT SECOND FLOOR ONLY THAT DRAINS TO EXTERIOR.

WINDOW SUPPLIER TO VERIFY AT LEAST ONE WINDOW IN ALL BEDROOMS TO HAVE A CLEAR OPENABLE AREA OF 4.0 SQ FT. THE MINIMUM NET CLEAR OPENING HEIGHT SHALL BE 22" AND THE MINIMUM NET CLEAR OPENING WIDTH SHALL BE 20". GLAZING TOTAL AREA OF NOT LESS THAN 5.0 SQ FT IN THE CASE OF A GROUND WINDOW AND NOT LESS THAN 5.7 SQ FT IN THE CASE OF AN UPPER STORY WINDOW. (PER NCRC SECTION R310.1.1)

ALL HANDRAIL BALLUSTERS TO BE SPACED SUCH THAT A 4" SPHERE CANNOT PASS BETWEEN BALLUSTERS. (PER LOCAL CODES.)

PROVIDE STAIR HANDRAILS AND GUARDRAILS PER LOCAL CODES.

BUILDER SET:

THE SCOPE OF THIS SET OF PLANS IS TO PROVIDE A "BUILDER'S SET" OF CONSTRUCTION DOCUMENTS AND GENERAL NOTES HEREINAFTER REFERRED TO AS "PLANS". THIS SET OF PLANS IS SUFFICIENT TO OBTAIN A BUILDING PERMIT; HOWEVER, ALL MATERIALS AND METHODS OF CONSTRUCTION NECESSARY TO COMPLETE THE PROJECT ARE NOT NECESSARILY DESCRIBED. THE PLANS DELINEATE AND DESCRIBE ONLY LOCATIONS, DIMENSIONS, TYPES OF MATERIALS, AND GENERAL METHODS OF ASSEMBLING OR FASTENING. THEY ARE NOT INTENDED TO SPECIFY PARTICULAR PRODUCTS OR OTHER METHODS OF ANY SPECIFIC MATERIALS, PRODUCT OR METHOD. THE IMPLEMENTATION OF THE PLANS REQUIRES A CLIENT / CONTRACTOR THOROUGHLY KNOWLEDGEABLE WITH THE APPLICABLE BUILDING CODES AND METHODS OF CONSTRUCTION SPECIFIC TO THIS PRODUCT TYPE AND TYPE OF CONSTRUCTION.

CONSTRUCTION REQUIREMENTS AND QUALITY: PROVIDE WORK OF THE SPECIFIC QUALITY; WHERE QUALITY LEVEL IS NOT INDICATED, PROVIDE WORK OF QUALITY CUSTOMARY IN SIMILAR TYPES OF WORK. WHERE THE PLANS AND SPECIFICATIONS, CODES, LAWS, REGULATIONS, MANUFACTURER'S RECOMMENDATIONS OR INDUSTRY STANDARDS REQUIRE WORK OF HIGHER QUALITY OR PERFORMANCE, PROVIDE WORK COMPLYING WITH THOSE REQUIREMENTS AND QUALITY. WHERE TWO OR MORE QUALITY PROVISIONS OF THOSE REQUIREMENTS CONFLICT WITH THE MOST STRINGENT REQUIREMENT; WHERE REQUIREMENTS ARE DIFFERENT BUT APPARENTLY EQUAL, AND WHERE IT IS UNCERTAIN WHICH REQUIREMENT IS MOST STRINGENT, OBTAIN CLARIFICATION FROM THE GMD DESIGN GROUP BEFORE PROCEEDING.

AREA CALCULATIONS:

MODEL 'BELHAVEN' SQUARE FOOTAGES

AREA		ELEV 'D', 'E', 'F'
1st FLOOR		827 SF
2nd FLOOR		1164 SF
TOTAL LIVING		1991 SF
GARAGE		408 SF
PORCH		57 SF
OPT. BASEMENT		766 SF

BASEMENT AREA IS TAKEN TO INSIDE OF CONCRETE WALL

Front Elevation 'A'

SCALE: 1/4"=1'-0" AT 22"X34" LAYOUT 1/8"=1'-0" AT 11"X17" LAYOUT

Front Elevation 'B'

SCALE: 1/4"=1'-0" AT 22"X34" LAYOUT 1/8"=1'-0" AT 11"X17" LAYOUT

Front Elevation 'C'

SCALE: 1/4"=1'-0" AT 22"X34" LAYOUT 1/8"=1'-0" AT 11"X17" LAYOUT

Front Elevation 'D'

SCALE: 1/4"=1'-0" AT 22"X34" LAYOUT 1/8"=1'-0" AT 11"X17" LAYOUT

Front Elevation 'E'

SCALE: 1/4"=1'-0" AT 22"X34" LAYOUT 1/8"=1'-0" AT 11"X17" LAYOUT

Front Elevation 'F'

SCALE: 1/4"=1'-0" AT 22"X34" LAYOUT 1/8"=1'-0" AT 11"X17" LAYOUT

NO:	DATE:	REVISION:
1	03.06.23	

PROFESSIONAL SEAL:

PROJECT TITLE:

40' Series

FOR CONSTRUCTION

CLIENTS NAME:

Express HOMES

PROJECT NO: GMD17049

SHEET TITLE:

QUICK VIEW

PRINT DATE:

March 06, 2023

SHEET NO:

0.1

AVAILABLE WITH OPTIONAL
9'-1" FIRST FLOOR PLATE

NOTES AT OPT 9'-1" PLT:
- WDW HT SET AT 7'-6"
- INTERIOR SOFFITS AT 8'-0"
- EXTERIOR SOFFITS AT 8'-0"

NOTES:

- GRADE CONDITIONS MAY VARY FOR INDIVIDUAL SITE FROM THAT SHOWN. BUILDER SHALL VERIFY AND COORDINATE PER ACTUAL SITE CONDITIONS.
- WINDOW HEAD HEIGHTS:
  1ST FLOOR = 6'-8" U.N.O. ON ELEVATIONS.
  2ND FLOOR = 7'-0" U.N.O. ON ELEVATIONS.
- ROOFING: PITCHED SHINGLES PER DEVELOPER.
- WINDOWS: MANUFACTURER PER DEVELOPER. DIVIDED LITES AS SHOWN ON THE EXTERIOR ELEVATIONS
- ENTRY DOOR: AS SELECTED BY DEVELOPER.
- GARAGE DOORS: AS SELECTED BY DEVELOPER, RAISED PANEL AS SHOWN.
- ALL EXTERIOR MATERIALS TO BE INSTALLED PER MANUFACTURER'S WRITTEN INSTRUCTIONS.
- PROTECTION AGAINST DECAY:
  (ALL PORTIONS OF A PORCH, SCREEN PORCH OR DECK FROM THE BOTTOM OF THE HEADER DOWN, INCLUDING POST, RAILS, PICKETS, STEPS AND FLOOR STRUCTURE.)
- INSULATION: PER TABLE N1102.1.2.

EXTERIOR WALLS:	R-15 BATTS MINIMUM. VERIFY
CEILING WITH ATTIC ABOVE:	R-38 BATTS MINIMUM. VERIFY
FLOOR OVER GARAGE:	R-19 BATTS MINIMUM. VERIFY
ATTIC KNEEWALL:	R-19 BATTS MINIMUM. VERIFY
CRAWL SPACE FLOORING:	R-19 BATTS MINIMUM. VERIFY

KEY NOTES:

MASONRY:

1. ADHERED STONE VENEER AS SELECTED BY DEVELOPER. HEIGHT AS NOTED.
2. MASONRY FULL BRICK AS SELECTED BY DEVELOPER. HEIGHT AS NOTED.
3. MASONRY FULL STONE AS SELECTED BY DEVELOPER. HEIGHT AS NOTED.
4. 8" SOLDIER COURSE.
5. ROWLOCK COURSE
6. N/A

TYPICALS:

7. CORROSION RESISTANT SCREEN LOUVERED VENTS, SIZE AS NOTED.
8. CODE APPROVED TERMINATION CHIMNEY CAP.
9. CORROSION RESISTANT ROOF TO WALL FLASHING. CODE COMPLIANT FLASHING PER NCRC R905.2.8.3
10. STANDING SEAM METAL ROOF, INSTALL PER MANUFCATURER'S WRITTEN INSTRUCTIONS.
11. DECORATIVE WROUGHT IRON. SEE DETAILS.

SIDING:

12. VINYL SHAKE SIDING PER DEVELOPER WITH VINYL CORNER TRIM PER DEVELOPER. (AT SPECIFIED LOCATIONS: FIBER CEMENT SHAKE SIDING PER DEVELOPER W/ 1X4 CORNER TRIM BOARD.)
13. VINYL LAP SIDING PER DEVELOPER WITH VINYL CORNER TRIM PER DEVELOPER. (AT SPECIFIED LOCATIONS: FIBER CEMENT LAP SIDING PER DEVELOPER W/ 1X4 CORNER TRIM BOARD.)
14. VINYL WAVY SIDING PER DEVELOPER WITH VINYL CORNER TRIM PER DEVELOPER. (AT SPECIFIED LOCATIONS: FIBER CEMENT WAVY SIDING PER DEVELOPER W/ 1X4 CORNER TRIM BOARD.)
15. VINYL BOARD AND BATT SIDING PER DEVELOPER WITH VINYL CORNER TRIM PER DEVELOPER. (AT SPECIFIED LOCATIONS: FIBER CEMENT PANEL SIDING W/ 1X3 BATTS AT 12" O.C. PER DEVELOPER W/ 1X4 CORNER TRIM BOARD.)
16. VINYL TRIM SIZE AS NOTED (AT SPECIFIC LOCATIONS: 1X FIBER CEMENT TRIM OR EQUAL, U.N.O. SIZE AS NOTED
17. FYPON SHUTTERS, TYPE AS SHOWN. SIZE AS NOTED. (AT SPECIFIC LOCATIONS: FALSE VINYL SHUTTERS, TYPE AS SHOWN. SIZE AS NOTED.)

ALL WINDOWS WHOSE OPENING IS LESS THAN 24" ABOVE THE FINISH FLOOR AND WHOSE OPENING IS GREATER THAN 72" ABOVE THE OUTSIDE WALKING SURFACE MUST HAVE WINDOW OPENING LIMITING DEVICES COMPLYING WITH THE NCRC SECTION R312.2.1 AND R312.2.2.

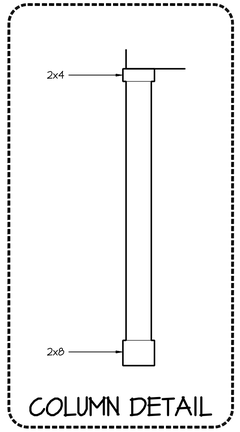

Front Elevation 'E'

SCALE: 1/4"=1'-0" AT 22"X34" LAYOUT 1/8"=1'-0" AT 11"X17" LAYOUT

NO:	DATE:	REVISION:
1	03.06.23	

PROFESSIONAL SEAL:

PROJECT TITLE:

40' Series

FOR CONSTRUCTION

CLIENTS NAME:

Express HOMES

PROJECT NO: GMD17049

SHEET TITLE:

'BELHAVEN'
EXTERIOR ELEVATIONS '4EPF-E'

PRINT DATE:

March 06, 2023

SHEET NO:

1E

ATTIC VENT CALCULATION FOR PLAN 'BELHAVEN': 1:150 RATIO.

THE NET FREE VENTILATING AREA SHALL NOT BE LESS THAN 1/150 OF THE AREA OF THE SPACE VENTILATED, PROVIDED THAT AT LEAST 50 PERCENT AND NOT MORE THAN 80 PERCENT OF THE REQUIRED VENTILATING AREA IS PROVIDED BY VENTILATORS LOCATED IN THE UPPER PORTION OF THE SPACE TO BE VENTILATED AT LEAST 3 FEET ABOVE THE EAVE OR CORNICE VENTS WITH THE BALANCE OF THE REQUIRED VENTILATION PROVIDED BY EAVE OR CORNICE VENTS.

EXCEPTIONS:

1. EXCLOSED ATTIC/RAFTER SPACES REQUIRING LESS THAN 1 SQ FT OF VENTILATION MAY BE VENTED WITH CONTINUOUS SOFFIT VENTILATION ONLY.
2. ENCLOSED ATTIC/RAFTER SPACES OVER UNCONDITIONED SPACE MAY BE VENTED WITH CONTINUOUS SOFFIT VENT ONLY.

GENERAL CONTRACTOR SHALL VERIFY THE NET FREE VENTILATION OF THE VENT PRODUCT SELECTED BY OWNER. VERIFY WITH MANUFACTURER OF HIGH AND LOW VENTS TO BE USED FOR MINIMUM CALCULATED VENTS REQUIRED. THE REQUIRED VENTILATION SHALL BE MAINTAINED. PROVIDE INSULATION STOP SUCH THAT INSULATION DOES NOT OBSTRUCT FREE AIR MOVEMENT AS REQUIRED BY THE BUILDING OFFICIAL.

ALL OVERLAP FRAMED ROOF AREAS SHALL HAVE OPENINGS BETWEEN THE ADJACENT ATTICS IN THE ROOF SHEATHING (AS ALLOWED BY THE STRUCTURAL ENGINEER) TO ALLOW PASSAGE AND ATTIC VENTILATION BETWEEN THE TWO OR ISOLATED ATTIC SPACES SHALL BE VENTED INDEPENDENTLY TO CBC REQUIREMENTS.

PER DEVELOPER, AT ALL CANTILEVERED FLOORS, CANTILEVERED ARCHITECTURAL POP-OUTS, AND ANY DOUBLE FRAMING PROJECTIONS THAT ARE SEPARATED FROM THE VENTING CALCULATIONS SHOWN ABOVE, PROVIDE A CONTINUOUS 2" CORROSION RESISTANT SOFFIT VENT AT UNDERSIDE OF FRAMED ELEMENT.

(PER SECTION R806.2)

1 SQUARE INCH VENT FOR EVERY 150 SQUARE INCHES OF CEILING
*144 SQ. IN. = 1 SQ. FT.
BLDG. CEILING (SF) X 144 = BLDG (SQ. IN.)
BLDG. (SQ. IN.) / 150 = SQ. IN. OF VENT REQUIRED

ROOF AREA 1:= 1235 SF
1235 SQ. FT. X 144 = 177840 SQ. IN.
177840 SQ. IN. / 150 = 1185.60 SQ. IN. OF VENT REQ'D

NOTES:

- ALL ROOF DRAINAGE SHALL BE PIPED TO STREET OR APPROVED DRAINAGE FACILITY.
- DASHED LINES INDICATE WALL BELOW.
- LOCATE GUTTER AND DOWNSPOUTS PER BUILDER.
- PITCHED ROOFS AS NOTED.
- TRUSS MANUFACTURER SHALL SUBMIT STRUCTURAL CALCS AND SHOP DRAWINGS TO THE BUILDER'S GENERAL CONTRACTOR AND BUILDING DEPARTMENT FOR REVIEW PRIOR TO FABRICATIONS.
- ALL PLUMBING VENTS SHALL BE COMBINED INTO A MINIMUM AMOUNT OF ROOF PENETRATIONS. ALL ROOF PENETRATIONS SHALL OCCUR TO THE REAR OF THE MAIN RIDGE.

ATTIC VENT CALCULATION FOR PLAN 'BELHAVEN': 1:300 RATIO.

AS AN ALTERNATE TO THE 1/150 RATIO LISTED ABOVE, THE NET FREE CROSS-VENTILATION AREA MAY BE REDUCED TO 1/300 WHEN A CLASS I OR II VAPOR RETARDER IS INSTALLED ON THE WARM - IN - WINTER SIDE OF THE CEILING.

GENERAL CONTRACTOR SHALL VERIFY THE NET FREE VENTILATION OF THE VENT PRODUCT SELECTED BY OWNER. VERIFY WITH MANUFACTURER OF HIGH AND LOW VENTS TO BE USED FOR MINIMUM CALCULATED VENTS REQUIRED. THE REQUIRED VENTILATION SHALL BE MAINTAINED. PROVIDE INSULATION STOP SUCH THAT INSULATION DOES NOT OBSTRUCT FREE AIR MOVEMENT AS REQUIRED BY THE BUILDING OFFICIAL.

ALL OVERLAP FRAMED ROOF AREAS SHALL HAVE OPENINGS BETWEEN THE ADJACENT ATTICS IN THE ROOF SHEATHING (AS ALLOWED BY THE STRUCTURAL ENGINEER) TO ALLOW PASSAGE AND ATTIC VENTILATION BETWEEN THE TWO OR ISOLATED ATTIC SPACES SHALL BE VENTED INDEPENDENTLY TO CBC REQUIREMENTS.

PER DEVELOPER, AT ALL CANTILEVERED FLOORS, CANTILEVERED ARCHITECTURAL POP-OUTS, AND ANY DOUBLE FRAMING PROJECTIONS THAT ARE SEPARATED FROM THE VENTING CALCULATIONS SHOWN ABOVE, PROVIDE A CONTINUOUS 2" CORROSION RESISTANT SOFFIT VENT AT UNDERSIDE OF FRAMED ELEMENT.

(PER SECTION R806.2)

1 SQUARE INCH VENT FOR EVERY 300 SQUARE INCHES OF CEILING
*144 SQ. IN. = 1 SQ. FT.
BLDG. CEILING (SF) X 144 = BLDG (SQ. IN.)
BLDG. (SQ. IN.) / 300 = SQ. IN. OF VENT REQUIRED
SQ. IN. OF VENT REQUIRED / 2 = 50% AT HIGH & 50% AT LOW.

ROOF AREA 1: = 1235 SF
1235 SQ. FT. X 144 = 177840 SQ. IN.
177840 SQ. FT. / 300 = 592.80 SQ. IN. OF VENT REQ'D
592.80 SQ. IN. / 2 = 296.40 SQ. IN.
296.40 SQ. IN. OF VENT AT HIGH & 296.40 SQ. IN. OF VENT AT LOW REQUIRED.

BUILDER TO PROVIDE (2) LAYERS OF UNDERLAYMENT AT ANY ROOF W/ A SLOPE FROM 2:12 TO LESS THAN 4:12

AT SINGLE FAMILY DETACHED PLANS:
PREFINISHED VENTED
SOFFIT AT EAVE PER MANUFACTURER.
(VERIFY FIRE SEPARATION DISTANCE FOR SOFFIT PROTECTION PER NCRC SECTION R302.1.1 AND TABLE R302.1)

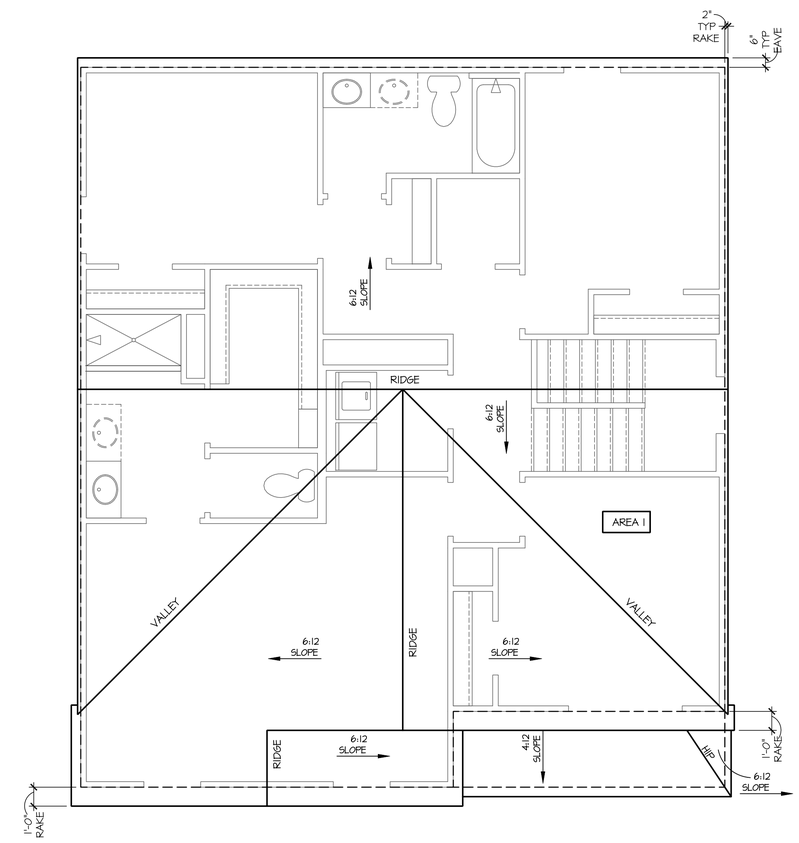

Roof Plan 'E'

SCALE: 1/4"=1'-0" AT 22"X34" LAYOUT 1/8"=1'-0" AT 11"X17" LAYOUT

NO:	DATE:	REVISION:
1	03.06.23	

PROFESSIONAL SEAL:

PROJECT TITLE:

40' Series

FOR CONSTRUCTION

CLIENTS NAME:

Express HOMES

PROJECT NO: GMD17049

SHEET TITLE:

'BELHAVEN' ROOF PLAN '4EPF-E'

PRINT DATE:

March 06, 2023

SHEET NO:

1.1 E

NOTES:

- GRADE CONDITIONS MAY VARY FOR INDIVIDUAL SITE FROM THAT SHOWN. BUILDER SHALL VERIFY AND COORDINATE PER ACTUAL SITE CONDITIONS.
- WINDOW HEAD HEIGHTS:
  1ST FLOOR = 6'-8" U.N.O. ON ELEVATIONS.
  2ND FLOOR = 7'-0" U.N.O. ON ELEVATIONS.
- ROOFING: PITCHED SHINGLES PER DEVELOPER.
- WINDOWS: MANUFACTURER PER DEVELOPER. DIVIDED LITES AS SHOWN ON THE EXTERIOR ELEVATIONS
- ENTRY DOOR: AS SELECTED BY DEVELOPER.
- GARAGE DOORS: AS SELECTED BY DEVELOPER, RAISED PANEL AS SHOWN.
- ALL EXTERIOR MATERIALS TO BE INSTALLED PER MANUFACTURER'S WRITTEN INSTRUCTIONS.
- PROTECTION AGAINST DECAY:
  (ALL PORTIONS OF A PORCH, SCREEN PORCH OR DECK FROM THE BOTTOM OF THE HEADER DOWN, INCLUDING POST, RAILS, PICKETS, STEPS AND FLOOR STRUCTURE.)
- INSULATION: PER TABLE N1102.1.2.

EXTERIOR WALLS:	R-15 BATTS MINIMUM. VERIFY
CEILING WITH ATTIC ABOVE:	R-38 BATTS MINIMUM. VERIFY
FLOOR OVER GARAGE:	R-19 BATTS MINIMUM. VERIFY
ATTIC KNEEWALL:	R-19 BATTS MINIMUM. VERIFY
CRAWL SPACE FLOORING:	R-19 BATTS MINIMUM. VERIFY

KEY NOTES:

MASONRY:

1. ADHERED STONE VENEER AS SELECTED BY DEVELOPER. HEIGHT AS NOTED.
2. MASONRY FULL BRICK AS SELECTED BY DEVELOPER. HEIGHT AS NOTED.
3. MASONRY FULL STONE AS SELECTED BY DEVELOPER. HEIGHT AS NOTED.
4. 8" SOLDIER COURSE.
5. ROWLOCK COURSE
6. N/A

TYPICALS:

7. CORROSION RESISTANT SCREEN LOUVERED VENTS, SIZE AS NOTED.
8. CODE APPROVED TERMINATION CHIMNEY CAP.
9. CORROSION RESISTANT ROOF TO WALL FLASHING. CODE COMPLIANT FLASHING PER NCRC R905.2.8.3
10. STANDING SEAM METAL ROOF, INSTALL PER MANUFCATURER'S WRITTEN INSTRUCTIONS.
11. DECORATIVE WROUGHT IRON. SEE DETAILS.

SIDING:

12. VINYL SHAKE SIDING PER DEVELOPER WITH VINYL CORNER TRIM PER DEVELOPER. (AT SPECIFIED LOCATIONS: FIBER CEMENT SHAKE SIDING PER DEVELOPER W/ 1X4 CORNER TRIM BOARD.)
13. VINYL LAP SIDING PER DEVELOPER WITH VINYL CORNER TRIM PER DEVELOPER. (AT SPECIFIED LOCATIONS: FIBER CEMENT LAP SIDING PER DEVELOPER W/ 1X4 CORNER TRIM BOARD.)
14. VINYL WAVY SIDING PER DEVELOPER WITH VINYL CORNER TRIM PER DEVELOPER. (AT SPECIFIED LOCATIONS: FIBER CEMENT WAVY SIDING PER DEVELOPER W/ 1X4 CORNER TRIM BOARD.)
15. VINYL BOARD AND BATT SIDING PER DEVELOPER WITH VINYL CORNER TRIM PER DEVELOPER. (AT SPECIFIED LOCATIONS: FIBER CEMENT PANEL SIDING W/ 1X3 BATTS AT 12" O.C. PER DEVELOPER W/ 1X4 CORNER TRIM BOARD.)
16. VINYL TRIM SIZE AS NOTED (AT SPECIFIC LOCATIONS: 1X FIBER CEMENT TRIM OR EQUAL, U.N.O. SIZE AS NOTED
17. FYPON SHUTTERS, TYPE AS SHOWN. SIZE AS NOTED. (AT SPECIFIC LOCATIONS: FALSE VINYL SHUTTERS, TYPE AS SHOWN. SIZE AS NOTED.)

ALL WINDOWS WHOSE OPENING IS LESS THAN 24" ABOVE THE FINISH FLOOR AND WHOSE OPENING IS GREATER THAN 72" ABOVE THE OUTSIDE WALKING SURFACE MUST HAVE WINDOW OPENING LIMITING DEVICES COMPLYING WITH THE NCRC SECTION R312.2.1 AND R312.2.2.

AVAILABLE WITH OPTIONAL 9'-1" FIRST FLOOR PLATE

NOTES AT OPT 9'-1" PLT:
- WDW HT SET AT 7'-6"
- INTERIOR SOFFITS AT 8'-0"
- EXTERIOR SOFFITS AT 8'-0"

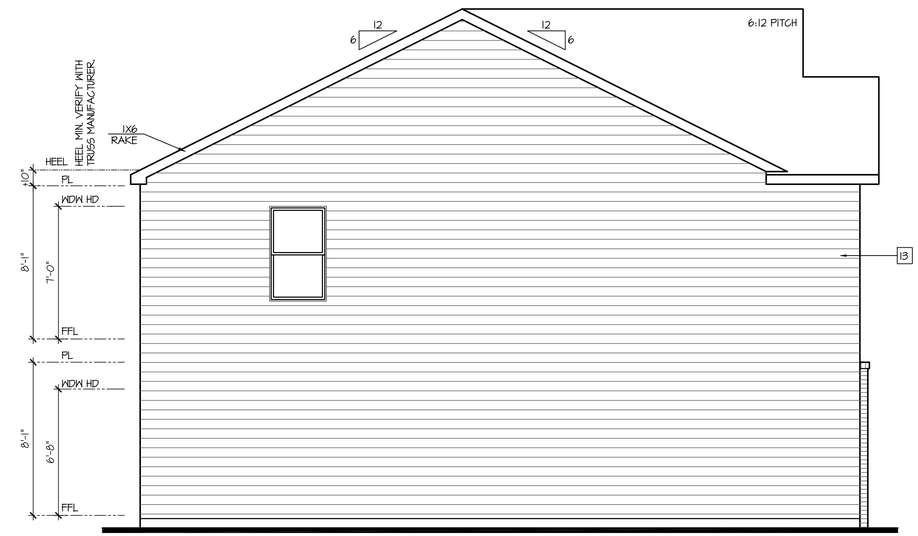

Left Elevation 'E'

SCALE: 1/4"=1'-0" AT 22"X34" LAYOUT 1/8"=1'-0" AT 11"X17" LAYOUT

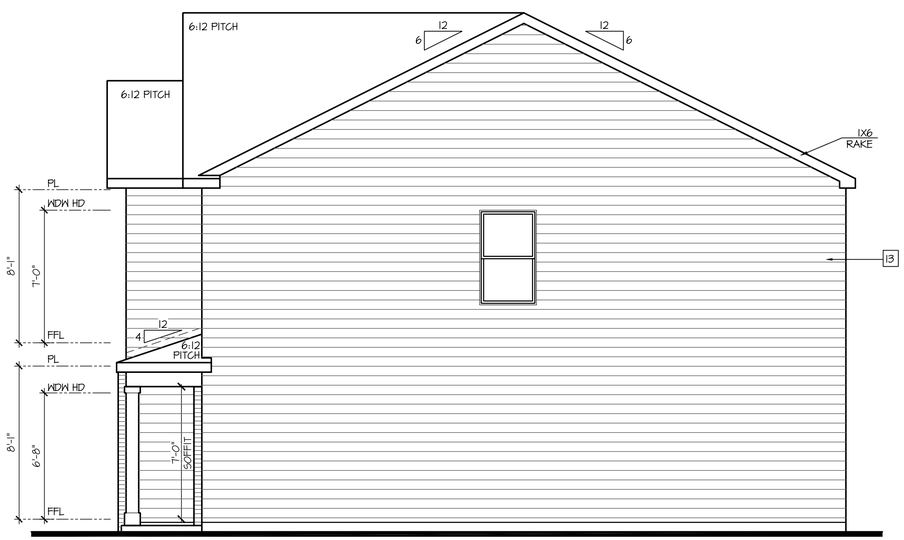

Right Elevation 'E'

SCALE: 1/4"=1'-0" AT 22"X34" LAYOUT 1/8"=1'-0" AT 11"X17" LAYOUT

Rear Elevation

SCALE: 1/4"=1'-0" AT 22"X34" LAYOUT 1/8"=1'-0" AT 11"X17" LAYOUT

NO:	DATE:	REVISION:
1	03.06.23	

PROFESSIONAL SEAL:

PROJECT TITLE:

40' Series

FOR CONSTRUCTION

CLIENTS NAME:

Express HOMES

PROJECT NO: GMD17049

SHEET TITLE:

'BELHAVEN' EXTERIOR ELEVATIONS '4EPF-E'

PRINT DATE: March 06, 2023

SHEET NO: **2E**

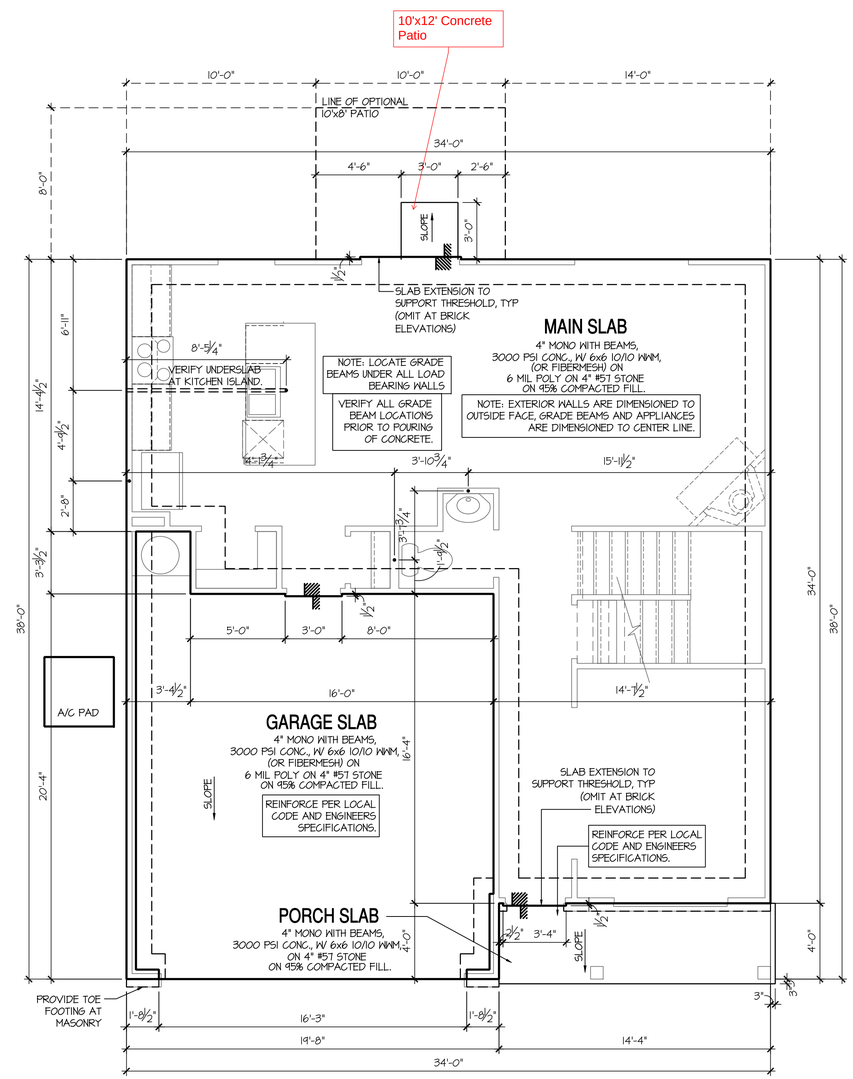

Monolithic Slab Plan 'E'

SCALE: 1/4"=1'-0" AT 22"X34" LAYOUT 1/8"=1'-0" AT 11"X17" LAYOUT

NOTES FOR NORTH CAROLINA:

- IRRIGATION SYSTEM SHALL BE DESIGNED TO PREVENT THE SATURATION OF SOIL ADJACENT TO BUILDING.
- THIS PERIMETER DIMENSION PLAN IS FOR DIMENSIONAL INFORMATION ONLY.
- SLOPE ALL STOOPS AND HARDSCAPE MATERIAL AWAY FROM BUILDING - TYPICAL.
- SLOPE GARAGE FLOOR 1/8" PER FOOT TO GARAGE DOOR OPENING.
- VERIFY CURB CUT BLOCKOUT WITH GARAGE DOOR MANUFACTURER.
- REFER TO CIVIL DRAWINGS FOR FINISH SURFACE ELEVATIONS.
- FINISH GRADE SHALL PROVIDE POSITIVE DRAINAGE AWAY FROM BUILDING. REFER TO SOILS REPORT FOR ANY SPECIFIC REQUIREMENTS.
- REFER TO STRUCTURAL DRAWINGS FOR HOLDDOWNS, FOOTING DETAILS, CURB THICKNESS, AND INFORMATION NOT SHOWN ON THIS PLAN.
- PLUMBING FIXTURES, VENT LOCATIONS, ETC. ARE APPROXIMATE. CONTRACTOR TO VERIFY COUNT AND LOCATION.
- VERIFY THE SUPPLY FOR SEPARATE CONDUITS TO ANY ISLAND FOR GAS, WATER OR ELECTRIC.
- VERIFY ALL DOOR THRESHOLD HEIGHTS TO HARD SURFACES. 8 1/4" MAX AT INSWING DOORS. (PER NCRC SECTION R311.3.1.)
- TYP STOOP AT INSWING/SLIDER DOORS: 36" DEEP BY THE WIDTH OF THE DOOR SERVED, MINIMUM. (PER NCRC SECTION R311.3.) PROVIDE A SLIP-RESISTANT FINISH.
- FOR THE USE OF EXPOSED GAS WATER HEATERS IN THE GARAGE, PROTECT THE WATER HEATER WITH 3" DIA CONCRETE FILLED STEEL PIPE EMBEDDED INTO CONCRETE FOOTING.
- SOILS TREATMENT: BORACARE TERMITE TO BE APPLIED TO FRAMING PER PRODUCT SPECIFICATIONS. (PROVIDE CHEMICAL TREATMENT FOR PROTECTION FROM TERMITE INVESTATION ACCORDING TO THE STANDARDS OF THE NC DEPT OF AGRICULTURE.)
- WOOD CONTACTING CONCRETE OR MASONRY OR LESS THAN CODE REQUIRED SEPARATION TO GRADE SHALL BE PRESSURE TREATED OR FOUNDATION GRADE REDWOOD. SET ALL EXTERIOR WALL SILLS IN MASTIC.

NO:	DATE:	REVISION:
1	03.06.23	

PROFESSIONAL SEAL:

PROJECT TITLE:

40' Series

FOR CONSTRUCTION

CLIENTS NAME:

Express HOMES

PROJECT NO: GMD17049

SHEET TITLE:

'BELHAVEN' MONOLITHIC SLAB PLAN '4EPF-E'

PRINT DATE:

March 06, 2023

SHEET NO:

3 MS E

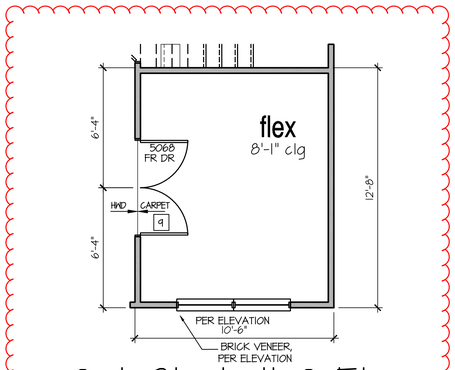

Opt Study ILO Flex

SCALE: 1/4"=1'-0" AT 22"X34" LAYOUT 1/8"=1'-0" AT 11"X17" LAYOUT

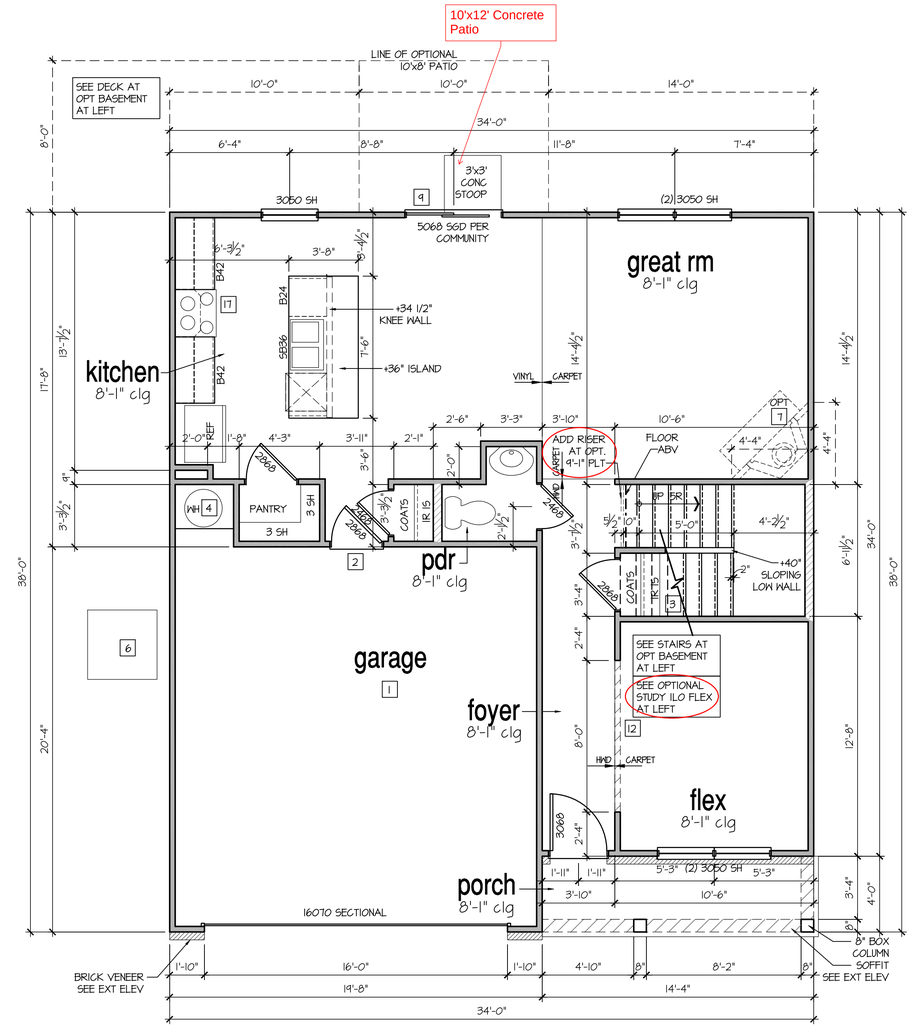

1st Floor Plan 'E'

SCALE: 1/4"=1'-0" AT 22"X34" LAYOUT 1/8"=1'-0" AT 11"X17" LAYOUT

8'-9 1/2" STAIR NOTE:
(USE 14" TJI WITH 3/4" PLYWOOD SUBFLOOR)
15 TREADS AT 10" EACH VERIFY
16 RISERS AT +/- 7.5" = 120 1/4" TOTAL RISE VERIFY

8'-1" STAIR NOTE:
(USE 14" TJI WITH 3/4" PLYWOOD SUBFLOOR)
14 TREADS AT 10" EACH VERIFY
15 RISERS AT +/- 7.45" = 111 3/4" TOTAL RISE VERIFY

9'-1" STAIR NOTE:
(USE 14" TJI WITH 3/4" PLYWOOD SUBFLOOR)
15 TREADS AT 10" EACH VERIFY
16 RISERS AT +/- 7.73" = 123 3/4" TOTAL RISE VERIFY

- FOR ~~ADDITIONAL NOTES SEE GENERAL~~ NOTES ON TITLE SHEET AND DETAILS.
- WINDOW HEAD HEIGHTS:
  1ST FLOOR = 6'-8" U.N.O. ON ELEVATIONS.
  2ND FLOOR = 7'-0" U.N.O. ON ELEVATIONS.

ALL DIMENSIONS TO WINDOWS AND DOORS ARE TO CENTERLINE.

WALL LEGEND:

- FULL HEIGHT 2X4 WOOD STUD PARTITION
- FULL HEIGHT 2X6 WOOD STUD PARTITION
- BRICK / STONE VENEER
- STUD WALL BELOW HEIGHT AND STUD SIZE AS NOTED
- LOW GYPSUM BOARD WALL HEIGHT AND STUD SIZE AS NOTED
- DRYWALL OPENING. HEIGHT AS NOTED ON PLAN.

KEY NOTES FOR NORTH CAROLINA:

FIRE PROTECTION:

1. HOUSE TO GARAGE FIRE SEPARATION. GARAGE/HOUSE SEPARATION AT VERTICAL SURFACES SHALL BE PROTECTED WITH ONE (1) LAYER 1/2" GYPSUM BOARD. (PER NCRC TABLE R302.6.)
   GARAGE/HOUSE SEPARATION AT HORIZONTIAL SURFACES SHALL BE PROTECTED WITH ONE (1) LAYER 5/8" TYPE 'X' GYPSUM BOARD. (PER NCRC TABLE R302.6.)
2. HOUSE TO GARAGE DOOR SEPARATION. PROVIDE 1-3/8" SOLID CORE DOOR OR APPROVED 20 MINUTE RATED DOOR. (PER NCRC SECTION R302.5.1.)
3. BENEATH STAIRS AND LANDINGS. 1/2" GYPSUM BOARD ON WALLS AND CEILING OF ENCLOSED ACCESSIBLE AREAS. (PER NCRC SECTION R302.7.)
   IN CONCEALED SPACES BETWEEN STAIR STRINGERS PROVIDE FIREBLOCKING PER R302.11

MEPS

4. GAS WATER HEATER ON 18" HIGH PLATFORM. (PER CHAPTER 5 NCRC-PLUMBING)
5. FAU 8'X8' PLATFORM. VERIFY WITH TRUSS MANUFACTURER. (6'-6" MIN. CLEAR HEIGHT TO HORIZONTAL MEMBERS, 2"X6" OVER 2"X4" BOTTOM CHORD. OF TRUSS, VERIFY W/ TRUSSES.)
6. A/C CONDENSER PAD. (VERIFY)
7. PRE-FABRICATED METAL FIREPLACE. INSTALL PER MANUFACTURER'S WRITTEN INSTRUCTIONS.
8. ATTIC ACCESS LARGE ENOUGH TO REMOVE LARGEST PIECE OF EQUIPMENT BUT NOT LESS THAN 30"x22". FIRE RATED ACCESS AS NOTED. (PER NCRC 801.1)
   ATTIC ACCESS LADDER, VERIFY LOCATION AND SIZE WITH TRUSSES. (25 1/2" X 54" SIZE.) FOR GARAGE TO ATTIC SEPARATION PER NCRC 302.5.1 EXCEPTION.

TYPICALS:

9. TEMPERED SAFETY GLASS. (PER NCRC SECTION 308.4)
10. PLYWOOD SHELF ABOVE WITH DRYWALL FINISH OVER. HEIGHT AS NOTED.
11. HALF WALL, HEIGHT AS NOTED.
12. INTERIOR SOFFITS: FFL = 8'-1" U.N.O. SFL = 7'-6" U.N.O.

BATHS:

13. SHOWER. TEMPERED GLASS ENCLOSURE.
14. TUB-SHOWER COMBO. TEMPERED GLASS ENCLOSURE.
15. CERAMIC TILE SHOWER AND FLOOR. TEMPERED GLASS ENCLOSURE.
16. ACRYLIC TUB W/ CERAMIC PLATFORM

KITCHEN:

17. 30" SLIDE-IN ELECTRICAL RANGE W/ HOOD AND MICRO ABV. VENT PER MANUFACTURER'S WRITTEN INSTRUCTIONS.
18. 30" GAS COOKTOP AND HOOD. VENT PER MANUFACTURER'S WRITTEN INSTRUCTIONS.
19. ELECTRIC OVEN WITH MICROWAVE OVEN.

NO:	DATE:	REVISION:
1	03.06.23	

PROFESSIONAL SEAL:

PROJECT TITLE:

40' Series

FOR CONSTRUCTION

CLIENTS NAME:

Express HOMES

PROJECT NO: GMD17049

SHEET TITLE:

'BELHAVEN'
1st FLOOR PLAN '4EPF-E'

PRINT DATE:

March 06, 2023

SHEET NO:

4 E

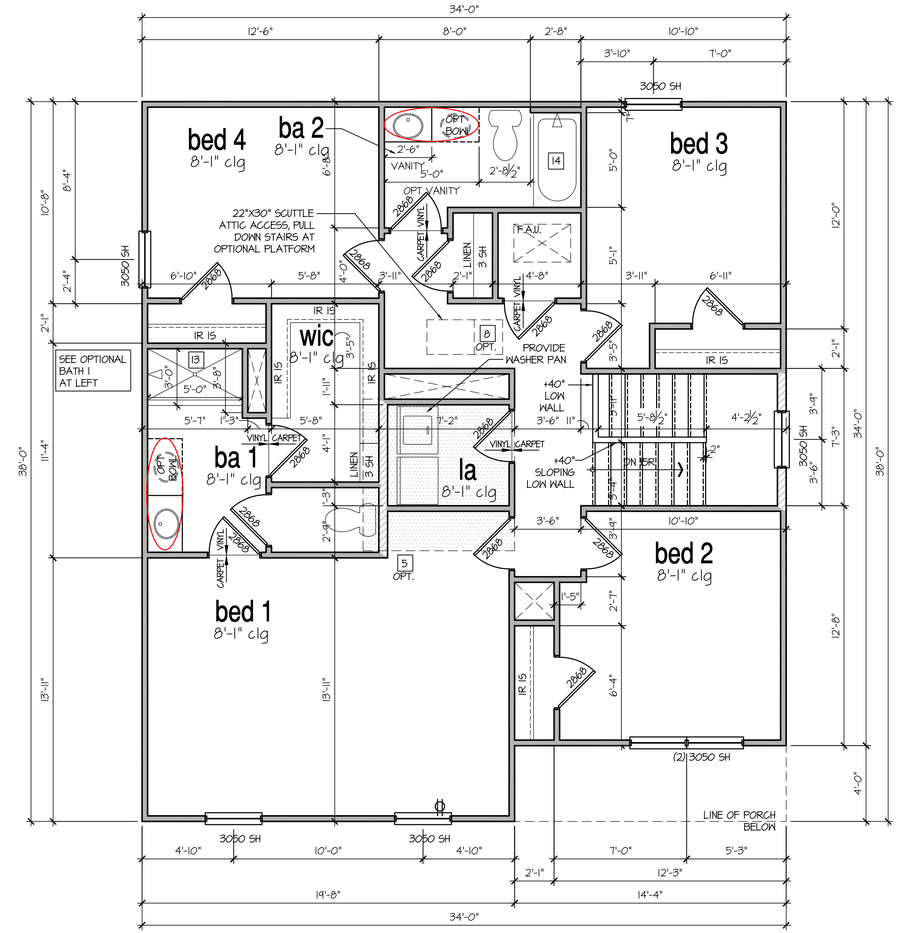

2nd Floor Plan 'E'

SCALE: 1/4"=1'-0" AT 22"X34" LAYOUT 1/8"=1'-0" AT 11"X17" LAYOUT

8'-1" STAIR NOTE:
(USE 14" TJI WITH 3/4" PLYWOOD SUBFLOOR)
14 TREADS AT 10" EACH VERIFY
15 RISERS AT +/- 7.45" = 111 3/4" TOTAL RISE VERIFY

9'-1" STAIR NOTE:
(USE 14" TJI WITH 3/4" PLYWOOD SUBFLOOR)
15 TREADS AT 10" EACH VERIFY
16 RISERS AT +/- 7.73" = 123 3/4" TOTAL RISE VERIFY

- FOR ADDITIONAL NOTES SEE GENERAL NOTES ON TITLE SHEET AND DETAILS.
- WINDOW HEAD HEIGHTS:
  1ST FLOOR = 6'-8" U.N.O. ON ELEVATIONS.
  2ND FLOOR = 7'-0" U.N.O. ON ELEVATIONS.

ALL DIMENSIONS TO WINDOWS AND DOORS ARE TO CENTERLINE.

WALL LEGEND:

- FULL HEIGHT 2X4 WOOD STUD PARTITION
- FULL HEIGHT 2X6 WOOD STUD PARTITION
- BRICK / STONE VENEER
- STUD WALL BELOW HEIGHT AND STUD SIZE AS NOTED
- LOW GYPSUM BOARD WALL HEIGHT AND STUD SIZE AS NOTED
- DRYWALL OPENING, HEIGHT AS NOTED ON PLAN.

KEY NOTES FOR NORTH CAROLINA:

FIRE PROTECTION:

1. HOUSE TO GARAGE FIRE SEPARATION. GARAGE/HOUSE SEPARATION AT VERTICAL SURFACES SHALL BE PROTECTED WITH ONE (1) LAYER 1/2" GYPSUM BOARD. (PER NCRC TABLE R302.6.)
   GARAGE/HOUSE SEPARATION AT HORIZONTAL SURFACES SHALL BE PROTECTED WITH ONE (1) LAYER 5/8" TYPE 'X' GYPSUM BOARD. (PER NCRC TABLE R302.6.)
2. HOUSE TO GARAGE DOOR SEPARATION. PROVIDE 1-3/8" SOLID CORE DOOR OR APPROVED 20 MINUTE RATED DOOR. (PER NCRC SECTION R302.5.1.)
3. BENEATH STAIRS AND LANDINGS, 1/2" GYPSUM BOARD ON WALLS AND CEILING OF ENCLOSED ACCESSIBLE AREAS. (PER NCRC SECTION R302.7.)
   IN CONCEALED SPACES BETWEEN STAIR STRINGERS PROVIDE FIREBLOCKING PER R302.11

MEP'S

4. GAS WATER HEATER ON 18" HIGH PLATFORM. (PER CHAPTER 5 NCRC-PLUMBING)
5. FAU 8'X8' PLATFORM. VERIFY WITH TRUSS MANUFACTURER. (6'-6" MIN. CLEAR HEIGHT TO HORIZONTAL MEMBERS, 2"X6" OVER 2"X4" BOTTOM CHORD, OF TRUSS, VERIFY W/ TRUSSES.)
6. A/C CONDENSER PAD. (VERIFY)
7. PRE-FABRICATED METAL FIREPLACE. INSTALL PER MANUFACTURER'S WRITTEN INSTRUCTIONS.
8. ATTIC ACCESS LARGE ENOUGH TO REMOVE LARGEST PIECE OF EQUIPMENT BUT NOT LESS THAN 30"x22". FIRE RATED ACCESS AS NOTED. (PER NCRC 807.1)
   ATTIC ACCESS LADDER, VERIFY LOCATION AND SIZE WITH TRUSSES. (25 1/2" X 54" SIZE.) FOR GARAGE TO ATTIC SEPARATION PER NCRC 302.5.1 EXCEPTION.

TYPICALS:

9. TEMPERED SAFETY GLASS. (PER NCRC SECTION 308.4)
10. PLYWOOD SHELF ABOVE WITH DRYWALL FINISH OVER. HEIGHT AS NOTED.
11. HALF WALL, HEIGHT AS NOTED.
12. INTERIOR SOFFITS: FFL = 8'-1" U.N.O. SFL = 7'-6" U.N.O.

BATHS:

13. SHOWER. TEMPERED GLASS ENCLOSURE.
14. TUB-SHOWER COMBO. TEMPERED GLASS ENCLOSURE.
15. CERAMIC TILE SHOWER AND FLOOR. TEMPERED GLASS ENCLOSURE.
16. ACRYLIC TUB W/ CERAMIC PLATFORM

KITCHEN:

17. 30" SLIDE-IN ELECTRICAL RANGE W/ HOOD AND MICRO ABV. VENT PER MANUFACTURER'S WRITTEN INSTRUCTIONS.
18. 30" GAS COOKTOP AND HOOD. VENT PER MANUFACTURER'S WRITTEN INSTRUCTIONS.
19. ELECTRIC OVEN WITH MICROWAVE OVEN.

NO:	DATE:	REVISION:
1	03.06.23	

PROFESSIONAL SEAL:

PROJECT TITLE:

40' Series

FOR CONSTRUCTION

CLIENTS NAME:

Express HOMES

PROJECT NO: GMD17049

SHEET TITLE:

'BELHAVEN' 2nd FLOOR PLAN '4EPF-E'

PRINT DATE: March 06, 2023

SHEET NO: **5 E**

8'-1" STAIR NOTE:
(USE 14" TJI WITH 3/4" PLYWOOD SUBFLOOR)
14 TREADS AT 10" EACH VERIFY
15 RISERS AT +/- 7.45" = 111 3/4" TOTAL RISE VERIFY

9'-1" STAIR NOTE:
(USE 14" TJI WITH 3/4" PLYWOOD SUBFLOOR)
15 TREADS AT 10" EACH VERIFY
16 RISERS AT +/- 7.73" = 123 3/4" TOTAL RISE VERIFY

NOTES:

- REFER TO FLOOR PLAN NOTES FOR TYPICAL FIRE PROTECTION NOTES AND LOCATIONS.
- THESE BUILDING SECTIONS MAY VARY AT ALTERNATE ELEVATION STYLES AND AT "PLAN OPTION" CONDITIONS. REFER TO MAIN FLOOR PLAN AND ALTERNATE FLOOR PLANS FOR INFORMATION NOT SHOWN HERE.
- BUILDING SECTIONS SHOWN HERE DEPICT VOLUMN SPACES WITHIN THE STRUCTURE. REFER TO STRUCTURAL DRAWINGS, TRUSS DRAWINGS, STRUCTURAL DETAILS AND CALCULATIONS BY OTHER FOR ALL STRUCTURAL INFO.
- ROOFING: PITCHED SHINGLE ROOF. REFER TO ROOF PLAN FOR TYPICALS.
- WOOD FLOORS: FLOOR SHEATHING OVER FLOOR JOIST. REFER TO STRUCTURAL AND TRUSS DRAWINGS BY OTHERS.
- VERIFY STAIRS MINIMUM AND MAXIMUM REQUIREMENTS FOR CONSTRUCTION CLEARANCES WITH LOCAL CODES.
- INSULATION:

EXTERIOR WALLS ZONE 3:	R-13 BATTS MINIMUM. VERIFY
EXTERIOR WALLS ZONE 4:	R-15 BATTS MINIMUM. VERIFY
CEILING WITH ATTIC ABOVE COMPRESSED INSULATION:	R-38 BATTS MINIMUM. VERIFY
CEILING WITH ATTIC ABOVE UNCOMPRESSED INSULATION (HEELS IN TRUSSES):	R-30 BATTS MINIMUM. VERIFY
FLOOR OVER GARAGE:	R-19 BATTS MINIMUM. VERIFY
ATTIC KNEEWALL:	R-19 BATTS MINIMUM. VERIFY
CRAWL SPACE FLOORING:	R-19 BATTS MINIMUM. VERIFY

PER STATE RESIDENTIAL CODE COMPLIANCE METHOD TO BE DETERMINED BY BUILDER.

WINDOW GLAZING "U" FACTOR: 0.35

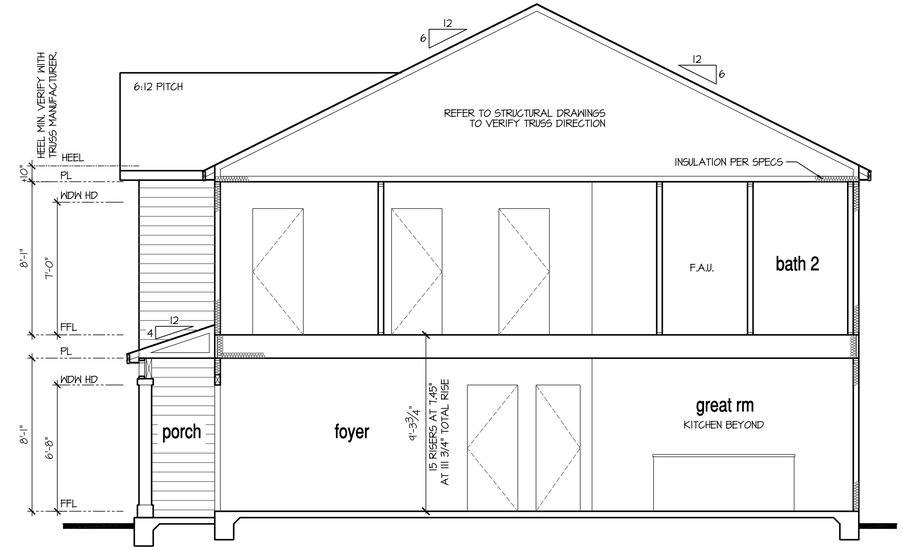

Building Section 1 at Monolithic Slab

SCALE: 1/4"=1'-0" AT 22"X34" LAYOUT 1/8"=1'-0" AT 11"X17" LAYOUT

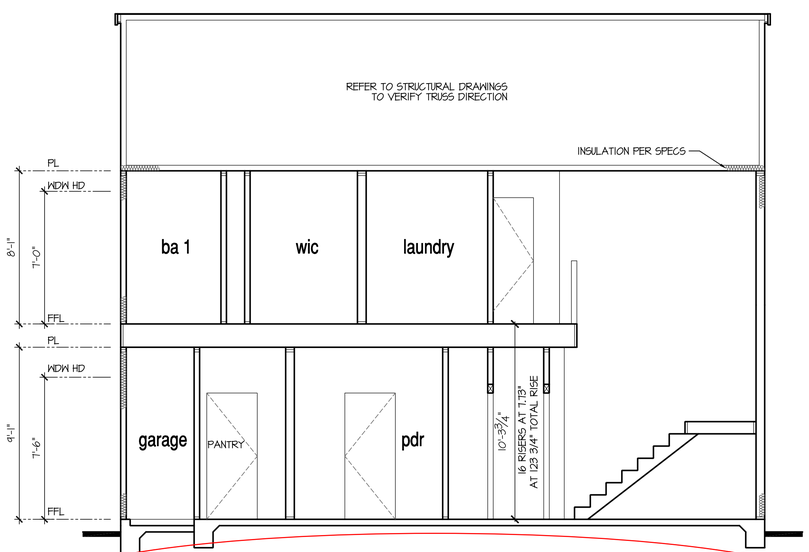

Building Section 2 at Optional 9' Plt

SCALE: 1/4"=1'-0" AT 22"X34" LAYOUT 1/8"=1'-0" AT 11"X17" LAYOUT

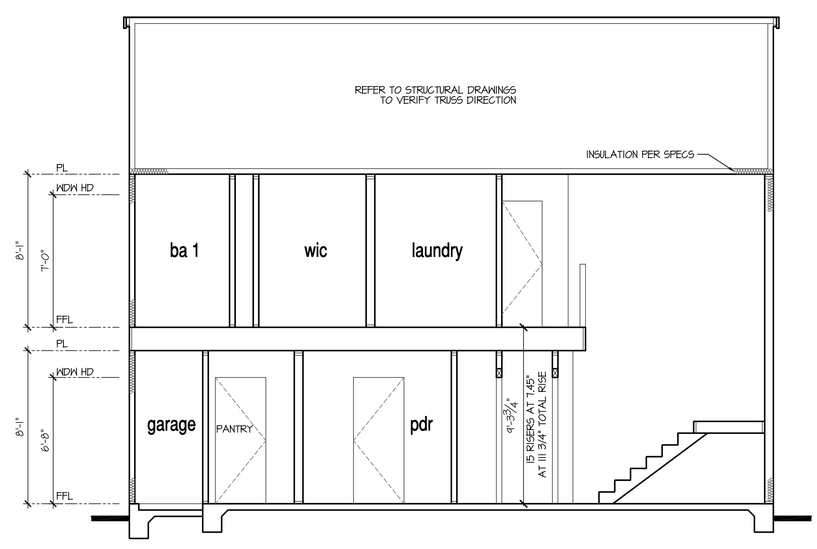

Building Section 2 at Monolithic Slab

SCALE: 1/4"=1'-0" AT 22"X34" LAYOUT 1/8"=1'-0" AT 11"X17" LAYOUT

NO:	DATE:	REVISION:
1	03.06.23	

PROFESSIONAL SEAL:

PROJECT TITLE:
40' Series

FOR CONSTRUCTION

CLIENTS NAME:

PROJECT NO: GMD17049

SHEET TITLE:
'BELHAVEN' BUILDING SECTIONS

PRINT DATE:
March 06, 2023

SHEET NO:
1A S

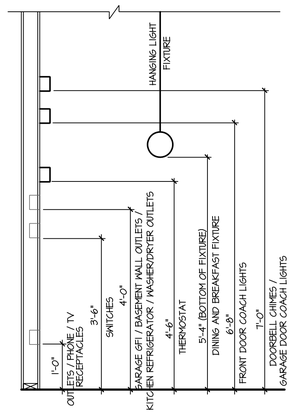

STANDARD ELECTRICAL BOX HEIGHTS

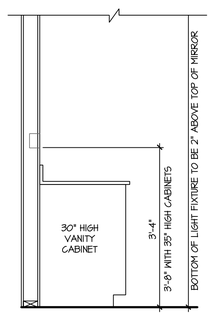

SWITCH AND RECEPTACLE BOXES OVER BATH CABINETS

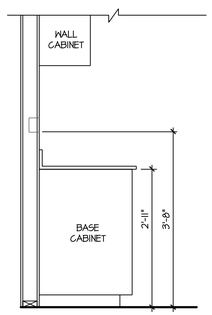

SWITCH AND RECEPTACLE BOXES OVER KITCHEN CABINETS

NOTES:

- PROVIDE GROUNDING ELECTRICAL ROD PER LOCAL CODES.
- PROVIDE AND INSTALL ARC FAULT CIRCUIT-INTERRUPTERS (AFCI) AS REQUIRED BY NATIONAL ELECTRICAL CODE (NEC) AND MEETING THE REQUIREMENTS OF ALL GOVERNING CODES.
- ALL EXHAUST FANS SHALL HAVE BACKDRAFT DAMPERS.
- FAN/LIGHTS IN WET/DAMP LOCATIONS SHALL BE LABLED "SUITABLE FOR WET OR DAMP LOCATIONS."
- ELECTRICAL SYSTEMS ARE SHOWN FOR INTENT ONLY. THESE SYSTEMS SHALL BE ENGINEERED BY OTHERS. THE CONTRACTOR SHALL BE RESPONSIBLE FOR PROPER INSTALLATION AND PLACEMENT.
- PROVIDE AND INSTALL LOCALLY CERTIFIED SMOKE DETECTORS AND CO2 DETECTORS AS REQUIRED BY NATIONAL FIRE PROTECTION ASSOCIATION (NFPA) AND MEETING THE REQUIREMENTS OF ALL GOVERNING CODES.
- PROVIDE AND INSTALL GROUND FAULT CIRCUIT-INTERRUPTERS (GFI) AS REQUIRED BY NATIONAL ELECTRICAL CODE (NEC) AND MEETING THE REQUIREMENTS OF ALL GOVERNING CODES.
- ELECTRICAL CONTRACTOR TO PROVIDE REQUIRED DIRECT HOOK-UPS/CUTOFFS.
- HVAC CONTRACTOR TO VERIFY THERMOSTAT LOCATIONS.
- ALL ELECTRICAL AND MECHANICAL EQUIPMENT (FURNACES, A/C UNITS, ELECTRICAL PANELS, SANITARY SUMP PITS, DRAIN TILE SUMP, AND WATER HEATERS) ARE SUBJECT TO RELOCATION DUE TO FIELD CONDITIONS.
- PROVIDE POWER, LIGHT AND SWITCH AS REQUIRED FOR ATTIC FURNACE PER CODE AND MANUFACTURER'S WRITTEN INSTRUCTIONS.

LEGEND:

	DUPLEX OUTLET		FLUSH-MOUNT LED CEILING FIXTURE
WP/GFI	WEATHERPROOF GFI DUPLEX OUTLET		HANGING FIXTURE
GFI	GROUND-FAULT CIRCUIT-INTERRUPTER DUPLEX OUTLET	CFP	FLUSH-MOUNT LED CEILING FIXTURE (PROVIDE CEILING FAN SUPPORT)
	HALF-SWITCHED DUPLEX OUTLET		2-LIGHT VANITY FIXTURE
220V	220 VOLT OUTLET		3-LIGHT VANITY FIXTURE
J	REINFORCED JUNCTION BOX		4-LIGHT VANITY FIXTURE
	WALL SWITCH		WALL MOUNT FIXTURE
3	THREE-WAY SWITCH		EXHAUST FAN (VENT TO EXTERIOR)
4	FOUR-WAY SWITCH		CEILING FAN (PROVIDE ADEQUATE SUPPORT)
CH	CHIMES		GAS SUPPLY WITH VALVE
	PUSHBUTTON SWITCH	HB	HOSE BIBB
SD	110V SMOKE DETECTOR W/ BATTERY BACKUP	GM	1/4" WATER STUB OUT
CO	CO2 DETECTOR		WALL SCONCE
T	THERMOSTAT		
PH	TELEPHONE		
TV	TELEVISION		
	ELECTRIC METER		
	ELECTRIC PANEL		
	DISCONNECT SWITCH		

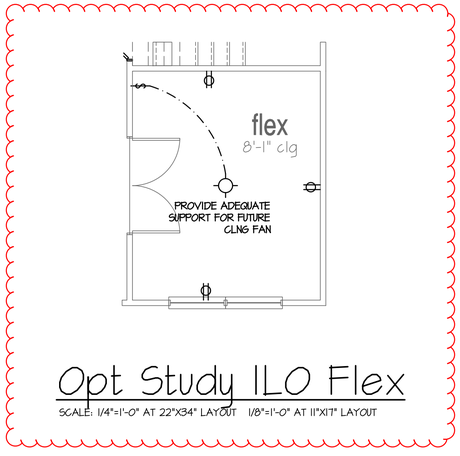

Opt Study ILO Flex

SCALE: 1/4"=1'-0" AT 22"X34" LAYOUT 1/8"=1'-0" AT 11"X17" LAYOUT

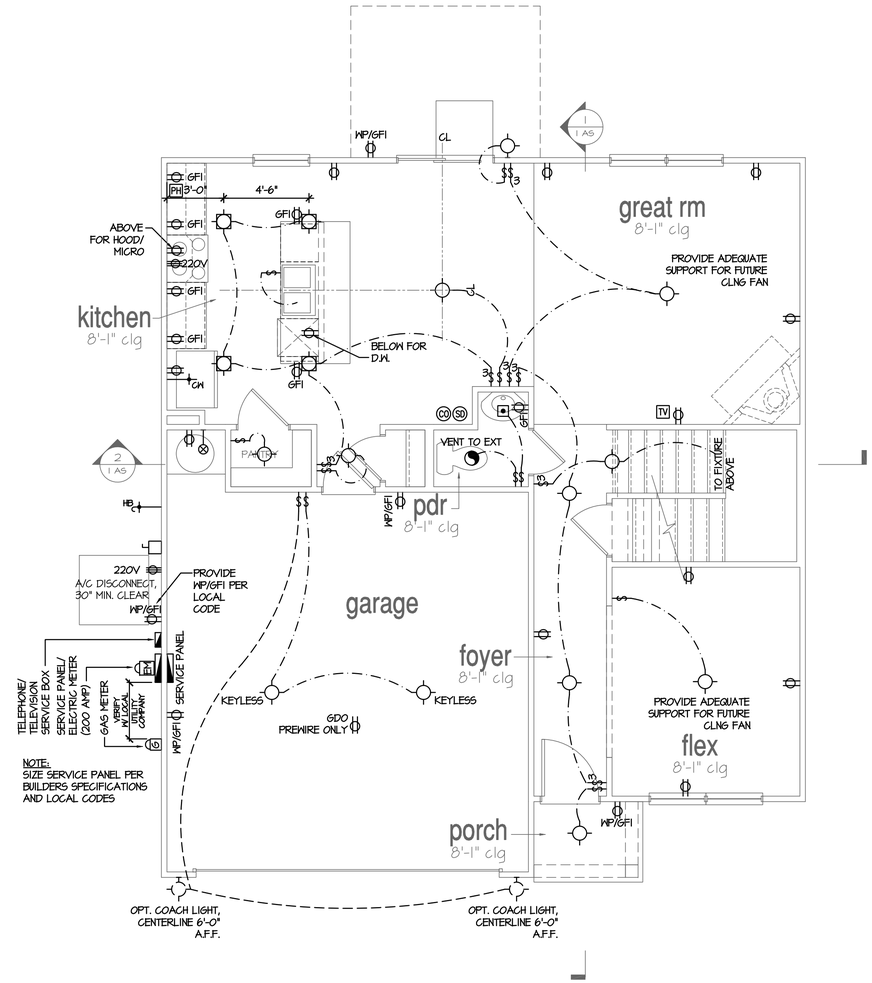

1st Floor Plan 'A'

SCALE: 1/4"=1'-0" AT 22"X34" LAYOUT 1/8"=1'-0" AT 11"X17" LAYOUT

NO:	DATE:	REVISION:
1	03.06.23	

PROFESSIONAL SEAL:

PROJECT TITLE:

40' Series

FOR CONSTRUCTION

CLIENTS NAME:

Express HOMES

PROJECT NO: GMD17049

SHEET TITLE:

'BELHAVEN'
1st FLOOR UTILITY PLAN

PRINT DATE:

March 06, 2023

SHEET NO:

7

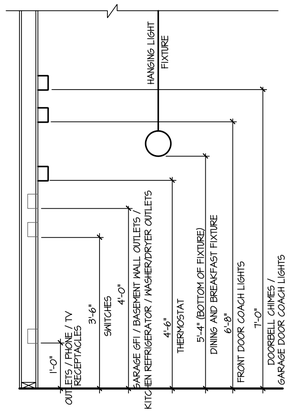

STANDARD ELECTRICAL BOX HEIGHTS

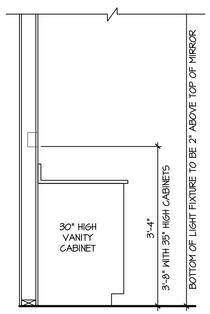

SWITCH AND RECEPTACLE BOXES OVER BATH CABINETS

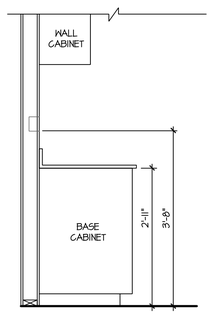

SWITCH AND RECEPTACLE BOXES OVER KITCHEN CABINETS

NOTES:

- PROVIDE GROUNDING ELECTRICAL ROD PER LOCAL CODES.
- PROVIDE AND INSTALL ARC FAULT CIRCUIT-INTERRUPTERS (AFCI) AS REQUIRED BY NATIONAL ELECTRICAL CODE (NEC) AND MEETING THE REQUIREMENTS OF ALL GOVERNING CODES.
- ALL EXHAUST FANS SHALL HAVE BACKDRAFT DAMPERS.
- FAN/LIGHTS IN WET/DAMP LOCATIONS SHALL BE LABLED "SUITABLE FOR WET OR DAMP LOCATIONS."
- ELECTRICAL SYSTEMS ARE SHOWN FOR INTENT ONLY. THESE SYSTEMS SHALL BE ENGINEERED BY OTHERS. THE CONTRACTOR SHALL BE RESPONSIBLE FOR PROPER INSTALLATION AND PLACEMENT.
- PROVIDE AND INSTALL LOCALLY CERTIFIED SMOKE DETECTORS AND CO2 DETECTORS AS REQUIRED BY NATIONAL FIRE PROTECTION ASSOCIATION (NFPA) AND MEETING THE REQUIREMENTS OF ALL GOVERNING CODES.
- PROVIDE AND INSTALL GROUND FAULT CIRCUIT-INTERRUPTERS (GFI) AS REQUIRED BY NATIONAL ELECTRICAL CODE (NEC) AND MEETING THE REQUIREMENTS OF ALL GOVERNING CODES.
- ELECTRICAL CONTRACTOR TO PROVIDE REQUIRED DIRECT HOOK-UPS/CUTOFFS.
- HVAC CONTRACTOR TO VERIFY THERMOSTAT LOCATIONS.
- ALL ELECTRICAL AND MECHANICAL EQUIPMENT (FURNACES, A/C UNITS, ELECTRICAL PANELS, SANITARY SUMP PITS, DRAIN TILE SUMP, AND WATER HEATERS) ARE SUBJECT TO RELOCATION DUE TO FIELD CONDITIONS.
- PROVIDE POWER, LIGHT AND SWITCH AS REQUIRED FOR ATTIC FURNACE PER CODE AND MANUFACTURER'S WRITTEN INSTRUCTIONS.

LEGEND:

	DUPLEX OUTLET		FLUSH-MOUNT LED CEILING FIXTURE
WP/GFI	WEATHERPROOF GFI DUPLEX OUTLET		HANGING FIXTURE
GFI	GROUND-FAULT CIRCUIT-INTERRUPTER DUPLEX OUTLET	CFP	FLUSH-MOUNT LED CEILING FIXTURE (PROVIDE CEILING FAN SUPPORT)
	HALF-SWITCHED DUPLEX OUTLET		2-LIGHT VANITY FIXTURE
220V	220 VOLT OUTLET		3-LIGHT VANITY FIXTURE
J	REINFORCED JUNCTION BOX		4-LIGHT VANITY FIXTURE
	WALL SWITCH		WALL MOUNT FIXTURE
3	THREE-WAY SWITCH		EXHAUST FAN (VENT TO EXTERIOR)
4	FOUR-WAY SWITCH		CEILING FAN (PROVIDE ADEQUATE SUPPORT)
CH	CHIMES		GAS SUPPLY WITH VALVE
	PUSHBUTTON SWITCH	HB	HOSE BIBB
SD	110V SMOKE DETECTOR W/ BATTERY BACKUP	CW	1/4" WATER STUB OUT
CO	CO2 DETECTOR		WALL SCONCE
T	THERMOSTAT		
PH	TELEPHONE		
TV	TELEVISION		
	ELECTRIC METER		
	ELECTRIC PANEL		
	DISCONNECT SWITCH		

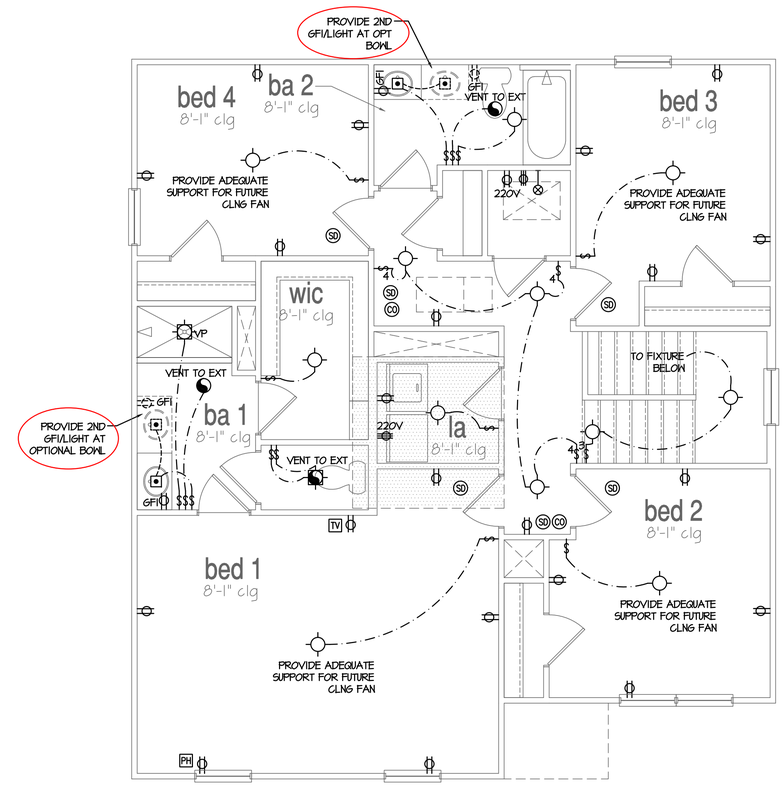

2nd Floor Plan 'A'

SCALE: 1/4"=1'-0" AT 22"X34" LAYOUT 1/8"=1'-0" AT 11"X17" LAYOUT

NO:	DATE:	REVISION:
1	03.06.23	

PROFESSIONAL SEAL:

PROJECT TITLE:

40' Series

FOR CONSTRUCTION

CLIENTS NAME:

Express HOMES

PROJECT NO: GMD17049

SHEET TITLE:

'BELHAVEN'

2nd FLOOR UTILITY PLAN

PRINT DATE:

March 06, 2023

SHEET NO:

8

DESIGN SPECIFICATIONS:

Construction Type: Commerical ☐ Residential ☒

Applicable Building Codes:
- 2018 North Carolina Residential Building Code with All Local Amendments
- ASCE 7-10: Minimum Design Loads for Buildings and Other Structures

Design Loads:
1. Roof Live Loads
   - 1.1. Conventional 2x ..... 20 PSF
   - 1.2. Truss ..... 20 PSF
     - 1.2.1. Attic Truss ..... 60 PSF
2. Roof Dead Loads
   - 2.1. Conventional 2x ..... 10 PSF
   - 2.2. Truss ..... 20 PSF
3. Snow ..... 15 PSF
   - 3.1. Importance Factor 1.0
4. Floor Live Loads
   - 4.1. Typ. Dwelling ..... 40 PSF
   - 4.2. Sleeping Areas ..... 30 PSF
   - 4.3. Decks ..... 40 PSF
   - 4.4. Passenger Garage ..... 50 PSF
5. Floor Dead Loads
   - 5.1. Conventional 2x ..... 10 PSF
   - 5.2. I-Joist ..... 15 PSF
   - 5.3. Floor Truss ..... 15 PSF
6. Ultimate Design Wind Speed (3 sec. gust) ..... 130 MPH
   - 6.1. Exposure ..... B
   - 6.2. Importance Factor 1.0
   - 6.3. Wind Base Shear
     - 6.3.1. Vx =
     - 6.3.2. Vy =
7. Component and Cladding (in PSF)

MEAN ROOF HT.	UP TO 30'	30'1"-35'	35'1"-40'	40'1"-45'
ZONE 1	16.7,-18.0	17.6,-18.9	18.3,-19.7	18.8,-20.2
ZONE 2	16.7,-21.0	17.6,-22.1	18.3,-22.9	18.8,-23.6
ZONE 3	16.7,-21.0	17.6,-22.1	18.3,-22.9	18.8,-23.6
ZONE 4	18.2,-19.0	19.2,-20.0	19.9,-20.8	20.4,-21.3
ZONE 5	18.2,-24.0	19.2,-25.2	19.9,-26.2	20.4,-26.9

8. Seismic
   - 8.1. Site Class ..... D
   - 8.2. Design Category C
   - 8.3. Importance Factor 1.0
   - 8.4. Seismic Use Group I
   - 8.5. Spectral Response Acceleration
     - 8.5.1. Sms = %g
     - 8.5.2. Sm1 = %g
   - 8.6. Seismic Base Shear
     - 8.6.1. Vx =
     - 8.6.2. Vy =
   - 8.7. Basic Structural System (check one)
     - ☒ Bearing Wall
     - ☐ Building Frame
     - ☐ Moment Frame
     - ☐ Dual w/ Special Moment Frame
     - ☐ Dual w/ Intermediate R/C or Special Steel
     - ☐ Inverted Pendulum
   - 8.8. Arch/Mech Components Anchored ..... No
   - 8.9. Lateral Design Control: Seismic ☐ Wind ☒
9. Assumed Soil Bearing Capacity 2000psf

SUMMIT
ENGINEERING • LABORATORY • TESTING
A Universal Engineering Sciences Company

BELHAVEN

PROJECT ADDRESS:
TBD

OWNER:
DR Horton, Inc.
8001 Arrowridge Blvd.
Charlotte, NC 28273

DESIGNER:
GMD Design Group
102 Fountain Brook Circle
Suite C
Cary, NC 27511

These drawings are to be coordinated with the architectural, mechanical, plumbing, electrical, and civil drawings. This coordination is not the responsibility of the structural engineering of record (SER). Should any discrepancies become apparent, the contractor shall notify SUMMIT Engineering, Laboratory & Testing, INC. before construction begins.

PLAN ABBREVIATIONS:

AB	ANCHOR BOLT	PT	PRESSURE TREATED
AFF	ABOVE FINISHED FLOOR	RS	ROOF SUPPORT
CJ	CEILING JOIST	SC	STUD COLUMN
CLR	CLEAR	SJ	SINGLE JOIST
DJ	DOUBLE JOIST	SPF	SPRUCE PINE FIR
DSP	DOUBLE STUD POCKET	SST	SIMPSON STRONG-TIE
EE	EACH END	SYP	SOUTHERN YELLOW PINE
EW	EACH WAY	TJ	TRIPLE JOIST
NTS	NOT TO SCALE	TSP	TRIPLE STUD POCKET
OC	ON CENTER	TYP	TYPICAL
PSF	POUNDS PER SQUARE FOOT	UNO	UNLESS NOTED OTHERWISE
PSI	POUNDS PER SQUARE INCH	WWF	WELDED WIRE FABRIC

Roof truss and floor joist layouts, and their corresponding loading details, were not provided to SUMMIT Engineering, Laboratory & Testing, INC. (SUMMIT) prior to the initial design. Therefore, truss and joist directions were assumed based on the information provided by DR Horton, Inc. Subsequent plan revisions based on roof truss and floor joist layouts shall be noted in the revision list, indicating the date the layouts were provided. Should any discrepancies become apparent, the contractor shall notify SUMMIT immediately.

SHEET LIST:

Sheet No.	Description
CS1	Cover Sheet, Specifications, Revisions
S1.0m	Monolithic Slab Foundation
S1.0s	Stem Wall Foundation
S1.0c	Crawl Space Foundation
S1.0b	Basement Foundation
S2.0	Basement Framing Plan
S3.0	First Floor Framing Plan
S4.0	Second Floor Framing Plan
S5.0	Roof Framing Plan
S6.0	Basement Bracing Plan
S7.0	First Floor Bracing Plan
S8.0	Second Floor Bracing Plan

REVISION LIST:

Revision No.	Date	Project No.	Description
1	8.14.19	22199R	Created Knox County and TN sets
2	11.5.21	05.28.T0165	Updated Structural Plans per Architectural Plans
3	1.11.23	T0165	Updated Structural Plans per New Architectural Plans
4	03.14.23	T0165	Created NC Plans per New Architectural Plans

DR HORTON PROJECT SIGN-OFF:

Manager	Signature
Operations	
Operations System	
Operations Product Development	

GENERAL STRUCTURAL NOTES:

1. The design professional whose seal appears on these drawings is the structural engineer of record (SER) for this project. The SER bears the responsibility of the primary structural elements and the performance of this structure. No other party may revise, alter, or delete any structural aspects of these construction documents without written permission of SUMMIT Engineering, Laboratory & Testing, INC. (SUMMIT) or the SER. For the purposes of these construction documents the SER and SUMMIT shall be considered the same entity.
2. The structure is only stable in its completed form. The contractor shall provide all required temporary bracing during construction to stabilize the structure.
3. The SER is not responsible for construction sequences, methods, or techniques in connection with the construction of this structure. The SER will not be held responsible for the contractor's failure to conform to the contract documents, should any non-conformities occur.
4. Any structural elements or details not fully developed on the construction drawings shall be completed under the direction of a licensed professional engineer. These shop drawings shall be submitted to SUMMIT for review before any construction begins. The shop drawings will be reviewed for overall compliance as it relates to the structural design of this project. Verification of the shop drawings for dimensions, or for actual field conditions, is not the responsibility of the SER or SUMMIT.
5. Verification of assumed field conditions is not the responsibility of the SER. The contractor shall verify the field conditions for accuracy and report any discrepancies to SUMMIT before construction begins.
6. The SER is not responsible for any secondary structural elements or non-structural elements, except for the elements specifically noted on the structural drawings.
7. This structure and all construction shall conform to all applicable sections of the international residential code.
8. This structure and all construction shall conform to all applicable sections of local building codes.
9. All structural assemblies are to meet or exceed to requirements of the current local building code.

FOUNDATIONS:

1. The structural engineer has not performed a subsurface investigation. Verification of this assumed value is the responsibility of the owner or the contractor. Should any adverse soil condition be encountered the SER must be contacted before proceeding.
2. The bottom of all footings shall extend below the frost line for the region in which the structure is to be constructed. However, the bottom of all footings shall be a minimum of 12" below grade.
3. Any fill shall be placed under the direction or recommendation of a licensed professional engineer.
4. The resulting soil shall be compacted to a minimum of 95% maximum dry density.
5. Excavations of footings shall be lined temporarily with a 6 mil polyethylene membrane if placement of concrete does not occur within 24 hours of excavation.
6. No concrete shall be placed against any subgrade containing water, ice, frost, or loose material.

STRUCTURAL STEEL:

1. Structural steel shall be fabricated and erected in accordance with the American Institute of Steel Construction "Code of Standard Practice for Steel Buildings and Bridges" and the manual of Steel Construction "Load Resistance Factor Design" latest editions.
2. Structural steel shall receive one coat of shop applied rust-inhibitive paint.
3. All steel shall have a minimum yield stress (F_y) of 36 ksi unless otherwise noted.
4. Welding shall conform to the latest edition of the American Welding Society's Structural Welding Code AWS D1.1. Electrodes for shop and field welding shall be class E70XX. All welding shall be performed by a certified welder per the above standards.

CONCRETE:

1. Concrete shall have a normal weight aggregate and a minimum compressive strength (f'c) at 28 days of 3000 psi, unless otherwise noted on the plan.
2. Concrete shall be proportioned, mixed, and placed in accordance with the latest editions of ACI 318: "Building Code Requirements for Reinforced Concrete" and ACI 301: "Specifications for Structural Concrete for Buildings".
3. Air entrained concrete must be used for all structural elements exposed to freeze/thaw cycles and deicing chemicals. Air entrainment amounts (in percent) shall be within -1% to +2% of target values as follows:
   - 3.1. Footings: 5%
   - 3.2. Exterior Slabs: 5%
4. No admixtures shall be added to any structural concrete without written permission of the SER.
5. Concrete slabs-on-grade shall be constructed in accordance with ACI 302.1R-96: "Guide for Concrete Slab and Slab Construction".
6. The concrete slab-on-grade has been designed using a subgrade modulus of k=250 pci and a design loading of 200 psf. The SER is not responsible for differential settlement, slab cracking or other future defects resulting from unreported conditions not in accordance with the above assumptions.
7. Control or saw cut joints shall be spaced in interior slabs-on-grade at a maximum of 15'-0" O.C. and in exterior slabs-on-grade at a maximum of 10'-0" unless otherwise noted.
8. Control or saw cut joints shall be produced using conventional process within 4 to 12 hours after the slab has been finished.
9. Reinforcing steel may not extend through a control joint. Reinforcing steel may extend through a saw cut joint.
10. All welded wire fabric (WWF.) for concrete slabs-on-grade shall be placed at mid-depth of slab. The WWF. shall be securely supported during the concrete pour.

CONCRETE REINFORCEMENT:

1. Fibrous concrete reinforcement, or fibermesh, specified in concrete slabs-on-grade may be used for control of cracking due to shrinkage and thermal expansion/contraction, lowered water migration, an increase in impact capacity, increased abrasion resistance, and residual strength.
2. Fibermesh reinforcing to be 100% virgin polypropylene fibers containing no reprocessed olefin materials and specifically manufactured for use as concrete secondary reinforcement.
3. Application of fibermesh per cubic yard of concrete shall equal a minimum of 0.1% by volume (1.5 pounds per cubic yard)
4. Fibermesh shall comply with ASTM C1116, any local building code requirements, and shall meet or exceed the current industry standard.
5. Steel reinforcing bars shall be new billet steel conforming to ASTM A615, grade 60.
6. Detailing, fabrication, and placement of reinforcing steel shall be in accordance with the latest edition of ACI 315: "Manual of Standard Practice for Detailing Concrete Structures"
7. Horizontal footing and wall reinforcement shall be continuous and shall have 90° bends, or corner bars with the same size/spacing as the horizontal reinforcement with a class B tension splice.
8. Lap reinforcement as required, a minimum of 40 bar diameters for tension or compression unless otherwise noted. Splices in masonry shall be a minimum of 48 bar diameters.
9. Where reinforcing dowels are required , they shall be equivalent in size and spacing to the vertical reinforcement. The dowel shall extend 48 bar diameters vertically and 20 bar diameters into the footing.
10. Where reinforcing steel is required vertically, dowels shall be provided unless otherwise noted.

WOOD FRAMING:

1. Solid sawn wood framing members shall conform to the specifications listed in the latest edition of the "National Design Specification for Wood Construction" (NDS). Unless otherwise noted, all wood framing members are designed to be Southern-Yellow-Pine (SYP) #2.
2. LVL or PSL engineered wood shall have the following minimum design values:
   - 2.1. E = 1,900,000 psi
   - 2.2. Fb = 2600 psi
   - 2.3. Fv = 285 psi
   - 2.4. Fc = 700 psi
3. Wood in contact with concrete, masonry, or earth shall be pressure treated in accordance with AWPA standard C-15. All other moisture exposed wood shall be treated in accordance with AWPA standard C-2
4. Nails shall be common wire nails unless otherwise noted.
5. Lag screws shall conform to ANSI/ASME standard B18.2.1-1981. Lead holes for lag screws shall be in accordance with NDS specifications.
6. All beams shall have full bearing on supporting framing members unless otherwise noted.
7. Exterior and load bearing stud walls are to be 2x4 SYP #2 @ 16" O.C. unless otherwise noted. Studs shall be continuous from the sole plate to the double top plate. Studs shall only be discontinuous at headers for window/door openings. A minimum of one king stud shall be placed at each end of the header. King studs shall be continuous.
8. Individual studs forming a column shall be attached with one 10d nail @ 6" O.C. staggered. The stud column shall be continuous to the foundation or beam. The column shall be properly blocked at all floor levels to ensure proper load transfer.
9. Multi-ply beams shall have each ply attached with (3) 10d nails @ 24" O.C.
10. Four and five ply beams shall be bolted together with (2) rows of 1/2" diameter through bolts staggered @ 16" O.C. unless noted otherwise.

WOOD TRUSSES:

1. The wood truss manufacturer/fabricator is responsible for the design of the wood trusses. Submit sealed shop drawings and supporting calculations to the SER for review prior to fabrication. The SER shall have a minimum of five (5) days for review. The review by the SER shall review for overall compliance with the design documents. The SER shall assume no responsibility for the correctness for the structural design for the wood trusses.
2. The wood trusses shall be designed for all required loadings as specified in the local building code, the ASCE Standard "Minimum Design Loads for Buildings and Other Structures," (ASCE 7-10), and the loading requirements shown on these specifications. The truss drawings shall be coordinated with all other construction documents and provisions provided for loads shown on these drawings including but not limited to HVAC equipment, piping, and architectural fixtures attached to the trusses.
3. The trusses shall be designed, fabricated, and erected in accordance with the latest edition of the "National Design Specification for Wood Construction," (NDS) and "Design Specification for Metal Plate Connected Wood Trusses."
4. The truss manufacturer shall provide adequate bracing information in accordance with "Commentary and Recommendations for Handling, Installing, and Bracing Metal Plate Connected Wood Trusses" (HIB-91). This bracing, both temporary and permanent, shall be shown on the shop drawings. Also, the shop drawings shall show the required attachments for the trusses.
5. Any chords or truss webs shown on these drawings have been shown as a reference only. The final design of the trusses shall be per the manufacturer.

EXTERIOR WOOD FRAMED DECKS:

1. Decks are to be framed in accordance with local building codes and as referenced on the structural plans, either through code references or construction details.

WOOD STRUCTURAL PANELS:

1. Fabrication and placement of structural wood sheathing shall be in accordance with the APA Design/Construction Guide "Residential and Commercial," and all other applicable APA standards.
2. All structurally required wood sheathing shall bear the mark of the APA.
3. Wood wall sheathing shall comply with the requirements of local building codes for the appropriate state as indicated on these drawings. Refer to wall bracing notes in plan set for more information. Sheathing shall be applied with the long direction perpendicular to framing, unless noted otherwise.
4. Roof sheathing shall be APA rated sheathing exposure 1 or 2. Roof sheathing shall be continuous over two supports and attached to its supporting roof framing with (1)-8d CC nail at 6"o/c at panel edges and at 12"o/c in panel field unless otherwise noted on the plans. Sheathing shall be applied with the long direction perpendicular to framing. Sheathing shall have a span rating consistent with the framing spacing. Use suitable edge support by use of plywood clips or lumber blocking unless otherwise noted. Panel end joints shall occur over framing. Apply building paper over the sheathing as required by the state Building Code.
5. Wood floor sheathing shall be APA rated sheathing exposure 1 or 2. Attach sheathing to its supporting framing with (1)-8d CC ringshank nail at 6"o/c at panel edges and at 12"o/c in panel field unless otherwise noted on the plans. Sheathing shall be applied perpendicular to framing. Sheathing shall have a span rating consistent with the framing spacing. Use suitable edge support by use of T&G plywood or lumber blocking unless otherwise noted. Panel end joints shall occur over framing. Apply building paper over the sheathing as required by the state Building Code.
6. Sheathing shall have a 1/8" gap at panel ends and edges as recommended in accordance with the APA.

STRUCTURAL FIBERBOARD PANELS:

1. Fabrication and placement of structural fiberboard sheathing shall be in accordance with the applicable APA standards.
2. All structurally required fiberboard sheathing shall bear the mark of the APA.
3. Fiberboard wall sheathing shall comply with the requirements of local building codes for the appropriate state as indicated on these drawings. Refer to wall bracing notes in plan set for more information.
4. Sheathing shall have a 1/8" gap at panel ends and edges are recommended in accordance with the APA.

SUMMIT
ENGINEERING • LABORATORY • TESTING
A Universal Engineering Sciences Company
2520 Whitehall Park Dr. Suite 250
Charlotte, NC, 28273
Office: 704.504.1717
Fax: 704.504.1725
www.summit-companies.com

NORTH CAROLINA CERTIFICATE OF AUTHORIZATION
SUMMIT Engineering, Laboratory & Testing, Inc.
No. F-1454

CLIENT:
DR Horton, Inc.
8001 Arrowridge Blvd.
Charlotte, NC 28273

PROJECT:
BELHAVEN LH
Coversheet

NORTH CAROLINA PROFESSIONAL SEAL 052713 ENGINEER CHRISTOPHER T. BLACKWELL
5/31/23

STRUCTURAL MEMBERS ONLY

DRAWING
DATE: 05/23/2023
SCALE: 22x34 1/4"=1'-0"
8x11 1/8"=1'-0"
PROJECT #: 05.28.T0165
DRAWN BY: EO
CHECKED BY: JCEF

ORIGINAL INFORMATION
PROJECT # DATE
22199 4/12/2019

REFER TO COVER SHEET FOR A COMPLETE LIST OF REVISIONS

SHEET
CS1

FOUNDATION NOTES:

1. FOUNDATIONS TO BE CONSTRUCTED IN ACCORDANCE WITH CHAPTER 4 OF THE 2018 NORTH CAROLINA RESIDENTIAL BUILDING CODE WITH ALL LOCAL AND STATE AMENDMENTS.
2. STRUCTURAL CONCRETE TO BE F_c = 3000 PSI, PREPARED AND PLACED IN ACCORDANCE WITH ACI STANDARD 318.
3. FOOTINGS TO BE PLACED ON UNDISTURBED EARTH, BEARING A MINIMUM OF 12" BELOW ADJACENT FINISHED GRADE, OR AS OTHERWISE DIRECTED BY THE CODE ENFORCEMENT OFFICIAL.
4. FOOTING SIZES BASED ON A PRESUMPTIVE SOIL BEARING CAPACITY OF 1000 PSF. CONTRACTOR IS SOLELY RESPONSIBLE FOR VERIFYING THE SUITABILITY OF THE SITE SOIL CONDITIONS AT THE TIME OF CONSTRUCTION.
5. FOOTINGS AND PIERS SHALL BE CENTERED UNDER THEIR RESPECTIVE ELEMENTS, PROVIDE 2" MINIMUM FOOTING PROJECTION FROM THE FACE OF MASONRY.
6. MAXIMUM DEPTH OF UNBALANCED FILL AGAINST MASONRY WALLS TO BE AS SPECIFIED IN SECTION R404.1 OF THE 2018 NORTH CAROLINA RESIDENTIAL BUILDING CODE.
7. PILASTERS TO BE BONDED TO PERIMETER FOUNDATION WALL.
8. PROVIDE FOUNDATION WATERPROOFING, AND DRAIN WITH POSITIVE SLOPE TO OUTLET AS REQUIRED BY SITE CONDITIONS.
9. PROVIDED PERIMETER INSULATION FOR ALL FOUNDATIONS PER 2018 NORTH CAROLINA RESIDENTIAL BUILDING CODE.
10. CORBEL FOUNDATION WALL AS REQUIRED TO ACCOMMODATE BRICK VENEERS.
11. CRAWL SPACE TO BE GRADED LEVEL, AND CLEARED OF ALL DEBRIS.
12. FOUNDATION ANCHORAGE SHALL BE CONSTRUCTED PER THE 2018 NORTH CAROLINA RESIDENTIAL CODE SECTION R403.1.6. MINIMUM 1/2" DIA. BOLTS SPACED AT 6'-0" ON CENTER WITH A 7" MINIMUM EMBEDMENT INTO MASONRY OR CONCRETE. MINIMUM (2) ANCHOR BOLTS PER PLATE SECTION AND (1) LOCATED NOT MORE THAN 12" FROM THE CORNER. ANCHOR BOLTS SHALL BE LOCATED IN THE CENTER THIRD OF THE PLATE.
13. ABBREVIATIONS:

DJ = DOUBLE JOIST	SJ = SINGLE JOIST
FT = FLOOR TRUSS	SC = STUD COLUMN
EE = EACH END	TJ = TRIPLE JOIST
OC = ON CENTER	CL = CENTER LINE
EW = EACH WAY	PL = POINT LOAD

14. ALL PIERS TO BE 16"x16" MASONRY AND ALL PILASTERS TO BE 8"x16" MASONRY, TYPICAL. (UNO)
15. WALL FOOTINGS TO BE CONTINUOUS CONCRETE, SIZES PER STRUCTURAL PLAN.
16. A FOUNDATION EXCAVATION OBSERVATION SHOULD BE CONDUCTED BY A PROFESSIONAL GEOTECHNICAL ENGINEER OR HIS QUALIFIED REPRESENTATIVE. IF ISOLATED AREAS OF YIELDING MATERIALS AND/OR POTENTIALLY EXPANSIVE SOILS ARE OBSERVED IN THE FOOTING EXCAVATIONS AT THE TIME OF CONSTRUCTION, SUMMIT ENGINEERING, LABORATORY & TESTING, INC. MUST BE PROVIDED THE OPPORTUNITY TO REVIEW THE FOOTING DESIGN PRIOR TO CONCRETE PLACEMENT.
17. ALL FOOTINGS & SLABS ARE TO BEAR ON UNDISTURBED SOIL OR 95% COMPACTED FILL, VERIFIED BY ENGINEER OR CODE OFFICIAL.

REFER TO BRACED WALL PLAN FOR PANEL LOCATIONS AND ANY REQUIRED HOLD-DOWNS. ADDITIONAL INFORMATION PER SECTION R602.10.8 AND FIGURE R602.10.1 OF THE 2018 NCRC.

NOTE: ALL EXTERIOR FOUNDATION DIMENSIONS ARE TO FRAMING AND NOT BRICK VENEER, UNO

NOTE: A 4" CRUSHED STONE BASE COURSE IS NOT REQUIRED WHEN SLAB IS INSTALLED ON WELL-DRAINED OR SAND-GRAVEL MIXTURE SOILS CLASSIFIED AS GROUP I PER TABLE R405.1

NOTE: FOUNDATION ANCHORAGE HAS BEEN DESIGNED TO RESIST THE CONTINUOUS WIND UPLIFT LOAD PATH IN ACCORDANCE WITH METHOD 3 OF SECTION R602.3.5 OF THE 2018 NCRC.

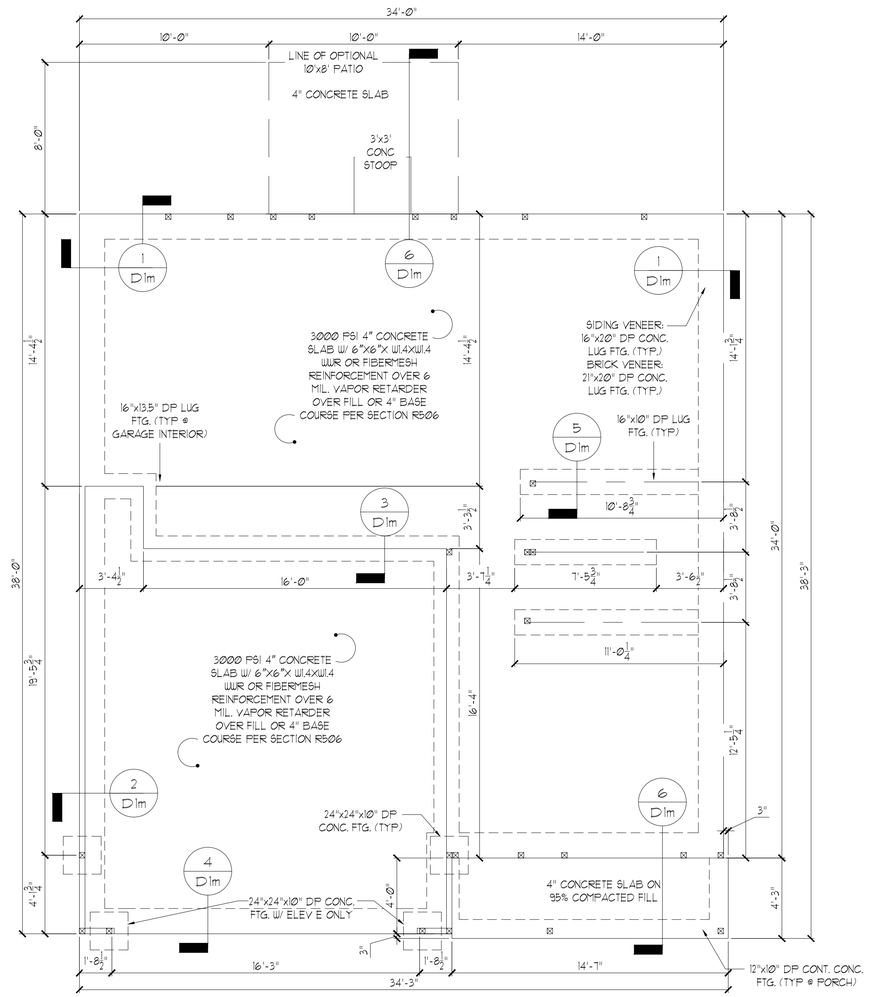

ELEVATIONS D, E, F

THESE PLANS ARE DESIGNED IN ACCORDANCE WITH ARCHITECTURAL PLANS PROVIDED BY DR HORTON COMPLETED/REVISED ON 03/06/2023, IT IS THE RESPONSIBILITY OF THE CLIENT TO NOTIFY SUMMIT ENGINEERING, LABORATORY & TESTING, INC. IF ANY CHANGES ARE MADE TO THE ARCHITECTURAL PLANS PRIOR TO CONSTRUCTION. SUMMIT ENGINEERING, LABORATORY & TESTING, Inc. CANNOT GUARANTEE THE ADEQUACY OF THESE STRUCTURAL PLANS WHEN USED WITH ARCHITECTURAL PLANS DATED DIFFERENTLY THAN THE DATE LISTED ABOVE.

STRUCTURAL MEMBERS ONLY

ENGINEERING SEAL APPLIES ONLY TO STRUCTURAL COMPONENTS ON THIS DOCUMENT, SEAL DOES NOT INCLUDE CONSTRUCTION MEANS, METHODS, TECHNIQUES, SEQUENCES, PROCEDURES OR SAFETY PRECAUTIONS. ANY DEVIATIONS OR DISCREPANCIES ON PLANS ARE TO BE BROUGHT TO THE IMMEDIATE ATTENTION OF SUMMIT ENGINEERING, LABORATORY & TESTING, INC. FAILURE TO DO SO WILL VOID SUMMIT LIABILITY.

STRUCTURAL ANALYSIS BASED ON 2018 NCRC.

MONOLITHIC SLAB FOUNDATION PLAN

SCALE: 1/4"=1'-0" ON 22"x34" OR 1/8"=1'-0" ON 11"x17"

SUMMIT
ENGINEERING • LABORATORY • TESTING
A Universal Engineering Sciences Company
2520 Whitehall Park Dr. Suite 250
Charlotte, NC. 28273
Office: 704.504.1717
Fax: 704.504.1725
www.summit-companies.com

NORTH CAROLINA CERTIFICATE OF AUTHORIZATION
SUMMIT Engineering, Laboratory & Testing, Inc.
No. F-1454

CLIENT:
DR Horton, Inc.
8001 Arrowridge Blvd.
Charlotte, NC 28273

PROJECT:
BELHAVEN LH
Monolithic Slab Foundation

NORTH CAROLINA PROFESSIONAL SEAL 048113 ENGINEER CHRISTOPHER T. BLACKWELL
3/31/23
STRUCTURAL MEMBERS ONLY

DRAWING
DATE: 03/23/2023
SCALE: 22x34 1/4"=1'-0"
8x11 1/8"=1'-0"
PROJECT #: 05287.0165
DRAWN BY: EO
CHECKED BY: JCEF

ORIGINAL INFORMATION
PROJECT # DATE
22193 4/3/2019

REFER TO COVER SHEET FOR A COMPLETE LIST OF REVISIONS

SHEET
S1.1m

REQUIRED BRACED WALL PANEL CONNECTIONS

METHOD	MATERIAL	MIN. THICKNESS	REQUIRED CONNECTION	
			@ PANEL EDGES	@ INTERMEDIATE SUPPORTS
CS-WSP	WOOD STRUCTURAL PANEL	3/8"	6d COMMON NAILS @ 6" O.C.	6d COMMON NAILS @ 12" O.C.
GB	GYPSUM BOARD	1/2"	5d COOLER NAILS** @ 7" O.C.	5d COOLER NAILS** @ 7" O.C.
WSP	WOOD STRUCTURAL PANEL	3/8"	6d COMMON NAILS @ 6" O.C.	6d COMMON NAILS @ 12" O.C.
PF	WOOD STRUCTURAL PANEL	7/16"	PER FIGURE R602.10.6.4	PER FIGURE R602.10.6.4
**OR EQUIVALENT PER TABLE R702.3.5				

BRACED WALL NOTES:

1. WALLS SHALL BE DESIGNED IN ACCORDANCE WITH SECTION R602.10 FROM THE 2018 NORTH CAROLINA RESIDENTIAL CODE WITH ALL LOCAL AND STATE AMENDMENTS.
2. WALLS ARE DESIGNED FOR SEISMIC ZONES A-C AND MAXIMUM WIND SPEEDS UP TO 130 MPH.
3. REFER TO ARCHITECTURAL PLAN FOR DOOR/WINDOW OPENING SIZES.
4. BRACING MATERIALS, METHODS AND FASTENERS SHALL BE IN ACCORDANCE WITH TABLE R602.10.4
5. ALL BRACED WALL PANELS SHALL BE FULL WALL HEIGHT AND SHALL NOT EXCEED 10 FEET FOR ISOLATED PANEL METHOD AND 12 FEET FOR CONTINUOUS SHEATHING METHOD WITHOUT ADDITIONAL ENGINEERING CALCULATIONS.
6. MINIMUM PANEL LENGTH SHALL BE PER TABLE R602.10.5.
7. THE INTERIOR SIDE OF EXTERIOR WALLS AND BOTH SIDES OF INTERIOR WALLS SHALL BE SHEATHED CONTINUOUSLY WITH MINIMUM 1/2" GYPSUM BOARD (UNO).
8. FOR CONTINUOUS SHEATHING METHOD, EXTERIOR WALLS SHALL BE SHEATHED ON ALL SHEATHABLE SURFACES INCLUDING INFILL AREAS BETWEEN BRACED WALL PANELS, ABOVE AND BELOW WALL OPENINGS, AND ON GABLE END WALLS.
9. FLOORS SHALL NOT BE CANTILEVERED MORE THAN 24" BEYOND THE FOUNDATION OR BEARING WALL BELOW WITHOUT ADDITIONAL ENGINEERING CALCULATIONS.
10. A BRACED WALL PANEL SHALL BE LOCATED WITHIN 10 FEET OF EACH END OF A BRACED WALL LINE.
11. THE MAXIMUM EDGE DISTANCE BETWEEN BRACED WALL PANELS SHALL NOT EXCEED 20 FEET.
12. MASONRY OR CONCRETE STEM WALLS w/ A LENGTH OF 48" OR LESS SUPPORTING A BRACED WALL PANEL SHALL BE DESIGNED IN ACCORDANCE WITH FIGURE R602.10.9 OF THE 2018 NCRC.
13. BRACED WALL PANEL CONNECTIONS TO FLOOR/CEILING SHALL BE CONSTRUCTED IN ACCORDANCE WITH SECTION R602.10.8
14. BRACED WALL PANEL CONNECTIONS TO ROOF SHALL BE CONSTRUCTED IN ACCORDANCE WITH SECTION R602.10.8.2
15. CRIPPLE WALLS AND WALK OUT BASEMENT WALLS SHALL BE DESIGNED IN ACCORDANCE WITH SECTION R602.10.11
16. PORTAL WALLS SHALL BE DESIGNED IN ACCORDANCE WITH FIGURE R602.10.6.4 (UNO)
17. ABBREVIATIONS:

GB = GYPSUM BOARD	WSP = WOOD STRUCTURAL PANEL
CS-XXX = CONT. SHEATHED	ENG = ENGINEERED SOLUTION
PF = PORTAL FRAME	PF-ENG = ENG. PORTAL FRAME

GENERAL STRUCTURAL NOTES:

1. CONSTRUCTION SHALL CONFORM TO 2018 NORTH CAROLINA RESIDENTIAL BUILDING CODE WITH ALL LOCAL AND STATE AMENDMENTS.
2. CONTRACTOR SHALL VERIFY ALL DIMENSIONS. CONTRACTOR SHALL COMPLY WITH THE CONTENTS OF THE DRAWING FOR THIS SPECIFIC PROJECT. ENGINEER IS NOT RESPONSIBLE FOR ANY DEVIATIONS FROM THIS PLAN.
3. CONTRACTOR IS RESPONSIBLE FOR PROVIDING TEMPORARY BRACING REQUIRED TO RESIST ALL FORCES ENCOUNTERED DURING ERECTION.
4. PROPERTIES USED IN THE DESIGN ARE AS FOLLOWS:
   MICRO$\text{LLAM}^{\circledR}$ (LVL): F_b = 2600 PSI, F_v = 285 PSI, E = 1.9×10^6 PSI
   PARALLAM (PSL): F_b = 2900 PSI, F_v = 290 PSI, E = 1.25×10^6 PSI
5. ALL WOOD MEMBERS SHALL BE #2 SYP UNLESS NOTED ON PLAN. ALL STUD COLUMNS AND JOISTS SHALL BE #2 SYP (UNO).
6. ALL BEAMS SHALL BE SUPPORTED WITH A (2) 2x4 #2 SYP STUD COLUMN AT EACH END UNLESS NOTED OTHERWISE.
7. ALL REINFORCING STEEL SHALL BE GRADE 60 BARS CONFORMING TO ASTM A615 AND SHALL HAVE A MINIMUM COVER OF 3".
8. CONTRACTOR TO PROVIDED LOOKOUTS WHEN CEILING JOISTS SPAN PERPENDICULAR TO RAFTERS.
9. FLITCH BEAMS, 4-PLY LVLS AND 3-PLY SIDE LOADED LVLS SHALL BE BOLTED TOGETHER WITH 1/2" DIA. THRU BOLTS SPACED AT 24" O.C. (MAX) STAGGERED OR EQUIVALENT CONNECTIONS PER DETAIL 1/D3f. MIN. EDGE DISTANCE SHALL BE 2" AND (2) BOLTS SHALL BE LOCATED MINIMUM 6" FROM EACH END OF THE BEAM.
10. ALL NON-LOAD BEARING HEADERS SHALL BE (1) FLAT 2x4 SYP #2, DROPPED. FOR NON-LOAD BEARING HEADERS EXCEEDING 8'-0" IN WIDTH AND/OR WITH MORE THAN 2'-0" OF CRIPPLE WALL ABOVE, SHALL BE (2) FLAT 2x4 SYP #2, DROPPED. (UNLESS NOTED OTHERWISE)

THESE PLANS ARE DESIGNED IN ACCORDANCE WITH ARCHITECTURAL PLANS PROVIDED BY DR HORTON COMPLETED/REVISED ON 03/06/2023. IT IS THE RESPONSIBILITY OF THE CLIENT TO NOTIFY SUMMIT ENGINEERING, LABORATORY & TESTING, INC. IF ANY CHANGES ARE MADE TO THE ARCHITECTURAL PLANS PRIOR TO CONSTRUCTION. SUMMIT ENGINEERING, LABORATORY & TESTING, Inc. CANNOT GUARANTEE THE ADEQUACY OF THESE STRUCTURAL PLANS WHEN USED WITH ARCHITECTURAL PLANS DATED DIFFERENTLY THAN THE DATE LISTED ABOVE.

STRUCTURAL MEMBERS ONLY

ENGINEERING SEAL APPLIES ONLY TO STRUCTURAL COMPONENTS ON THIS DOCUMENT, SEAL DOES NOT INCLUDE CONSTRUCTION MEANS, METHODS, TECHNIQUES, SEQUENCES, PROCEDURES OR SAFETY PRECAUTIONS. ANY DEVIATIONS OR DISCREPANCIES ON PLANS ARE TO BE BROUGHT TO THE IMMEDIATE ATTENTION OF SUMMIT ENGINEERING, LABORATORY & TESTING, INC. FAILURE TO DO SO WILL VOID SUMMIT LIABILITY.

STRUCTURAL ANALYSIS BASED ON 2018 NCRC.

FIRST FLOOR FRAMING PLAN

SCALE: 1/4"=1'-0" ON 22"x34" OR 1/8"=1'-0" ON 11"x17"

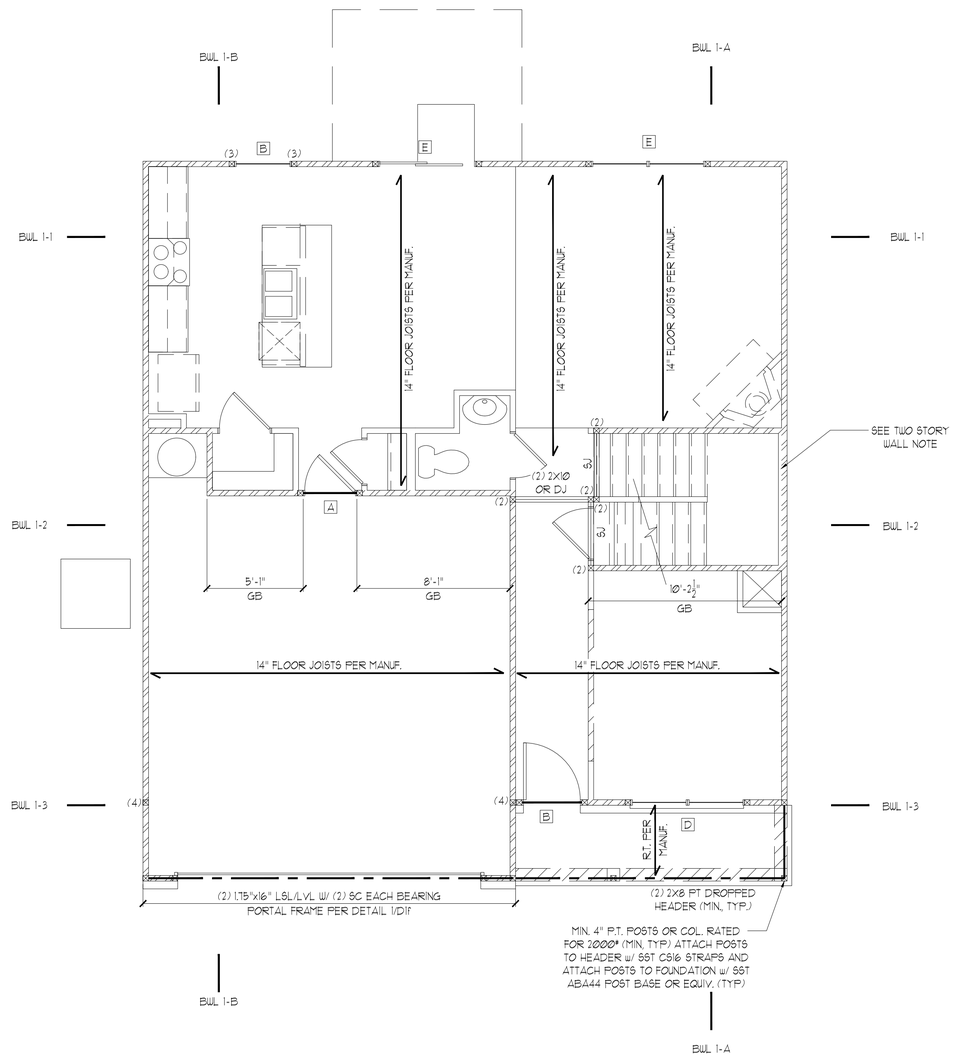

ELEVATIONS E, F

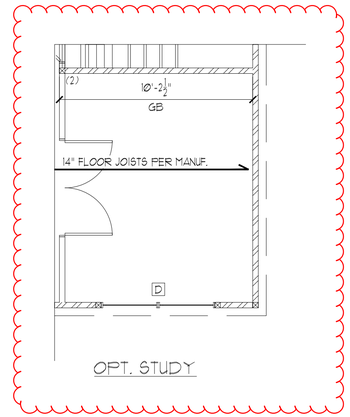

OPT. STUDY

NOTE: BRACING PLAN DOES NOT CHANGE WITH ANY OF THESE OPTIONS

FIRST FLOOR BRACING (FT)

CONTINUOUS SHEATHING METHOD - ALL ELEVATIONS		
	REQUIRED	PROVIDED
BWL 1-1	7.6	19.8
BWL 1-2	7.6	11.6
BWL 1-3	7.6	10.4
BWL 1-A	9.4	34.0
BWL 1-B	9.4	38.0

HEADER SCHEDULE

TAG	SIZE	JACKS (EACH END)
A	(2) 2x6	(1)
B	(2) 2x8	(2)
C	(2) 2x10	(2)
D	(2) 2x12	(2)
E	(2) 9-1/4" LSL/LVL	(3)
F	(3) 2x6	(1)
G	(3) 2x8	(2)
H	(3) 2x10	(2)
I	(3) 2x12	(2)

NOTES:
1. HEADER SIZES SHOWN ON PLANS ARE MINIMUMS. GREATER HEADER SIZES MAY BE USED FOR EASE OF CONSTRUCTION.
2. ALL HEADERS TO BE DROPPED (U.N.O.).
3. STUD COLUMNS NOTED ON PLAN OVERRIDE STUD COLUMNS LISTED ABOVE (U.N.O.).

KING STUD SCHEDULE

MAXIMUM HEADER SPAN	MINIMUM KING STUDS E.E.
4'-0"	(1)
6'-0"	(2)
8'-0"	(2)
10'-0"	(3)
12'-0"	(3)
14'-0"	(3)
16'-0"	(4)
18'-0"	(4)

WALL STUD SCHEDULE (10 FT HEIGHT)

STUD SIZE	STUD SPACING (O.C.)			
	ROOF ONLY	ROOF & 1 FLOOR	ROOF & 2 FLOORS	NON-LOAD BEARING
2x4	24"	16"	12"	24"
2x6	24"	24"	16"	24"

NOTES:
1. BRACED WALLS STUDS SHALL BE A MAX. OF 16" O.C.
2. STUDS SUPPORTS OPTIONAL WALK-UP ATTIC SHALL BE SPACED A MAX. OF 16" O.C.
3. TWO STORY WALLS SHALL BE FRAMED w/ 2x4 STUDS @ 12" O.C. OR 2x6 STUDS @ 16" O.C. BALLOON FRAMED w/ HORIZ. BLOCKING @ 6'-0" O.C. VERTICALLY.

LINTEL SCHEDULE

TAG	SIZE	OPENING SIZE
1	L3x3x1/4"	LESS THAN 6'-0"
2	L5x3x1/4"	6'-0" TO 10'-0"
3	L5x3-1/2x5/16"	GREATER THAN 10'-0"
4	L5x3-1/2x5/16" ROLLED OR EQUIV.	ALL ARCHED OPENINGS

SECURE LINTEL TO HEADER w/ (2) 1/2" DIAMETER LAG SCREWS STAGGERED @ 16" O.C. (TYP FOR)

ALL HEADERS WHERE BRICK IS USED, TO BE: (UNO)

SHADED WALLS INDICATED LOAD BEARING WALLS

JOIST & BEAM SIZES SHOWN ARE MINIMUMS, BUILDER MAY INCREASE DEPTH FOR EASE OF CONSTRUCTION.

NOTE: MEMBERS NOTED AS PRESSURE TREATED MAY BE FRAMED WITH NON-PRESSURE TREATED LUMBER PROVIDED THE ENTIRETY OF THE MEMBER IS WRAPPED TO PREVENT MOISTURE INTRUSION.

INSTALL HOLD-DOWNS FOR BRACED WALL END CONDITIONS PER SECTION R602.10.8 & FIGURE R602.10.7 OF THE 2018 NCRC.

NOTE: WALL SHEATHING AND FASTENERS HAVE BEEN DESIGNED TO RESIST THE CONTINUOUS WIND UPLIFT LOAD PATH IN ACCORDANCE WITH METHOD 3 OF SECTION R602.3.5 OF THE 2018 NCRC.

SUMMIT
ENGINEERING • LABORATORY • TESTING
A Universal Engineering Sciences Company
2520 Whitehall Park Dr. Suite 350
Charlotte, NC. 28273
Office: 704.504.1717
Fax: 704.504.1725
www.summit-companies.com

NORTH CAROLINA CERTIFICATE OF AUTHORIZATION
SUMMIT Engineering, Laboratory & Testing, Inc.
No. F-1454

CLIENT:
DR Horton, Inc.
8000 Arrowridge Blvd.
Charlotte, NC 28273

PROJECT:
BELHAVEN LH
First Floor Framing Plan

NORTH CAROLINA PROFESSIONAL SEAL 085715 ENGINEER CHRISTOPHER T. BLACKWELL 3/31/23

STRUCTURAL MEMBERS ONLY

DRAWING
DATE: 03/23/2023
SCALE: 22x34 1/4"=1'-0"
8x11 1/8"=1'-0"
PROJECT # 0503.10165
DRAWN BY: EO
CHECKED BY: JCEF

ORIGINAL INFORMATION
PROJECT # DATE
22795 4/12/2019

REFER TO COVER SHEET FOR A COMPLETE LIST OF REVISIONS

SHEET
S3.2

REQUIRED BRACED WALL PANEL CONNECTIONS

METHOD	MATERIAL	MIN. THICKNESS	REQUIRED CONNECTION	
			@ PANEL EDGES	@ INTERMEDIATE SUPPORTS
CS-WSP	WOOD STRUCTURAL PANEL	3/8"	6d COMMON NAILS @ 6" O.C.	6d COMMON NAILS @ 12" O.C.
GB	GYPSUM BOARD	1/2"	5d COOLER NAILS** @ 7" O.C.	5d COOLER NAILS** @ 7" O.C.
WSP	WOOD STRUCTURAL PANEL	3/8"	6d COMMON NAILS @ 6" O.C.	6d COMMON NAILS @ 12" O.C.
PF	WOOD STRUCTURAL PANEL	7/16"	PER FIGURE R602.10.6.4	PER FIGURE R602.10.6.4
**OR EQUIVALENT PER TABLE R702.3.5				

BRACED WALL NOTES:

1. WALLS SHALL BE DESIGNED IN ACCORDANCE WITH SECTION R602.10 FROM THE 2018 NORTH CAROLINA RESIDENTIAL CODE WITH ALL LOCAL AND STATE AMENDMENTS.
2. WALLS ARE DESIGNED FOR SEISMIC ZONES A-C AND MAXIMUM WIND SPEEDS UP TO 130 MPH.
3. REFER TO ARCHITECTURAL PLAN FOR DOOR/WINDOW OPENING SIZES.
4. BRACING MATERIALS, METHODS AND FASTENERS SHALL BE IN ACCORDANCE WITH TABLE R602.10.4
5. ALL BRACED WALL PANELS SHALL BE FULL WALL HEIGHT AND SHALL NOT EXCEED 10 FEET FOR ISOLATED PANEL METHOD AND 12 FEET FOR CONTINUOUS SHEATHING METHOD WITHOUT ADDITIONAL ENGINEERING CALCULATIONS.
6. MINIMUM PANEL LENGTH SHALL BE PER TABLE R602.10.5.
7. THE INTERIOR SIDE OF EXTERIOR WALLS AND BOTH SIDES OF INTERIOR WALLS SHALL BE SHEATHED CONTINUOUSLY WITH MINIMUM 1/2" GYPSUM BOARD (UNO).
8. FOR CONTINUOUS SHEATHING METHOD, EXTERIOR WALLS SHALL BE SHEATHED ON ALL SHEATHABLE SURFACES INCLUDING INFILL AREAS BETWEEN BRACED WALL PANELS, ABOVE AND BELOW WALL OPENINGS, AND ON GABLE END WALLS.
9. FLOORS SHALL NOT BE CANTILEVERED MORE THAN 24" BEYOND THE FOUNDATION OR BEARING WALL BELOW WITHOUT ADDITIONAL ENGINEERING CALCULATIONS.
10. A BRACED WALL PANEL SHALL BE LOCATED WITHIN 10 FEET OF EACH END OF A BRACED WALL LINE.
11. THE MAXIMUM EDGE DISTANCE BETWEEN BRACED WALL PANELS SHALL NOT EXCEED 20 FEET.
12. MASONRY OR CONCRETE STEM WALLS w/ A LENGTH OF 48" OR LESS SUPPORTING A BRACED WALL PANEL SHALL BE DESIGNED IN ACCORDANCE WITH FIGURE R602.10.9 OF THE 2018 NCRC.
13. BRACED WALL PANEL CONNECTIONS TO FLOOR/CEILING SHALL BE CONSTRUCTED IN ACCORDANCE WITH SECTION R602.10.8
14. BRACED WALL PANEL CONNECTIONS TO ROOF SHALL BE CONSTRUCTED IN ACCORDANCE WITH SECTION R602.10.8.2
15. CRIPPLE WALLS AND WALK OUT BASEMENT WALLS SHALL BE DESIGNED IN ACCORDANCE WITH SECTION R602.10.11.
16. PORTAL WALLS SHALL BE DESIGNED IN ACCORDANCE WITH FIGURE R602.10.6.4 (UNO)
17. ABBREVIATIONS:

GB = GYPSUM BOARD	WSP = WOOD STRUCTURAL PANEL
CS-XXX = CONT. SHEATHED	ENG = ENGINEERED SOLUTION
PF = PORTAL FRAME	PF-ENG = ENG. PORTAL FRAME

GENERAL STRUCTURAL NOTES:

1. CONSTRUCTION SHALL CONFORM TO 2018 NORTH CAROLINA RESIDENTIAL BUILDING CODE WITH ALL LOCAL AND STATE AMENDMENTS.
2. CONTRACTOR SHALL VERIFY ALL DIMENSIONS. CONTRACTOR SHALL COMPLY WITH THE CONTENTS OF THE DRAWING FOR THIS SPECIFIC PROJECT, ENGINEER IS NOT RESPONSIBLE FOR ANY DEVIATIONS FROM THIS PLAN.
3. CONTRACTOR IS RESPONSIBLE FOR PROVIDING TEMPORARY BRACING REQUIRED TO RESIST ALL FORCES ENCOUNTERED DURING ERECTION.
4. PROPERTIES USED IN THE DESIGN ARE AS FOLLOWS:
   MICROLLAM (LVL): F_b = 2600 PSI, F_v = 285 PSI, E = 1.9×10^6 PSI
   PARALLAM (PSL): F_b = 2900 PSI, F_v = 290 PSI, E = 1.25×10^6 PSI
5. ALL WOOD MEMBERS SHALL BE #2 SYP UNLESS NOTED ON PLAN. ALL STUD COLUMNS AND JOISTS SHALL BE #2 SYP (UNO).
6. ALL BEAMS SHALL BE SUPPORTED WITH A (2) 2x4 #2 SYP STUD COLUMN AT EACH END UNLESS NOTED OTHERWISE.
7. ALL REINFORCING STEEL SHALL BE GRADE 60 BARS CONFORMING TO ASTM A615 AND SHALL HAVE A MINIMUM COVER OF 3".
8. CONTRACTOR TO PROVIDED LOOKOUTS WHEN CEILING JOISTS SPAN PERPENDICULAR TO RAFTERS.
9. FLITCH BEAMS, 4-PLY LVLS AND 3-PLY SIDE LOADED LVLS SHALL BE BOLTED TOGETHER WITH 1/2" DIA. THRU BOLTS SPACED AT 24" O.C. (MAX) STAGGERED OR EQUIVALENT CONNECTIONS PER DETAIL 1/D3F. MIN. EDGE DISTANCE SHALL BE 2" AND (2) BOLTS SHALL BE LOCATED MINIMUM 6" FROM EACH END OF THE BEAM.
10. ALL NON-LOAD BEARING HEADERS SHALL BE (1) FLAT 2x4 SYP #2, DROPPED. FOR NON-LOAD BEARING HEADERS EXCEEDING 8'-0" IN WIDTH AND/OR WITH MORE THAN 2'-0" OF CRIPPLE WALL ABOVE, SHALL BE (2) FLAT 2x4 SYP #2, DROPPED. (UNLESS NOTED OTHERWISE)

THESE PLANS ARE DESIGNED IN ACCORDANCE WITH ARCHITECTURAL PLANS PROVIDED BY DR HORTON COMPLETED/REVISED ON 03/06/2023. IT IS THE RESPONSIBILITY OF THE CLIENT TO NOTIFY SUMMIT ENGINEERING, LABORATORY & TESTING, INC. IF ANY CHANGES ARE MADE TO THE ARCHITECTURAL PLANS PRIOR TO CONSTRUCTION. SUMMIT ENGINEERING, LABORATORY & TESTING, Inc. CANNOT GUARANTEE THE ADEQUACY OF THESE STRUCTURAL PLANS WHEN USED WITH ARCHITECTURAL PLANS DATED DIFFERENTLY THAN THE DATE LISTED ABOVE.

STRUCTURAL MEMBERS ONLY

ENGINEERING SEAL APPLIES ONLY TO STRUCTURAL COMPONENTS ON THIS DOCUMENT, SEAL DOES NOT INCLUDE CONSTRUCTION MEANS, METHODS, TECHNIQUES, SEQUENCES, PROCEDURES OR SAFETY PRECAUTIONS. ANY DEVIATIONS OR DISCREPANCIES ON PLANS ARE TO BE BROUGHT TO THE IMMEDIATE ATTENTION OF SUMMIT ENGINEERING, LABORATORY & TESTING, INC. FAILURE TO DO SO WILL VOID SUMMIT LIABILITY.

STRUCTURAL ANALYSIS BASED ON 2018 NCRC.

SECOND FLOOR FRAMING PLAN

SCALE: 1/4"=1'-0" ON 22"x34" OR 1/8"=1'-0" ON 11"x17"

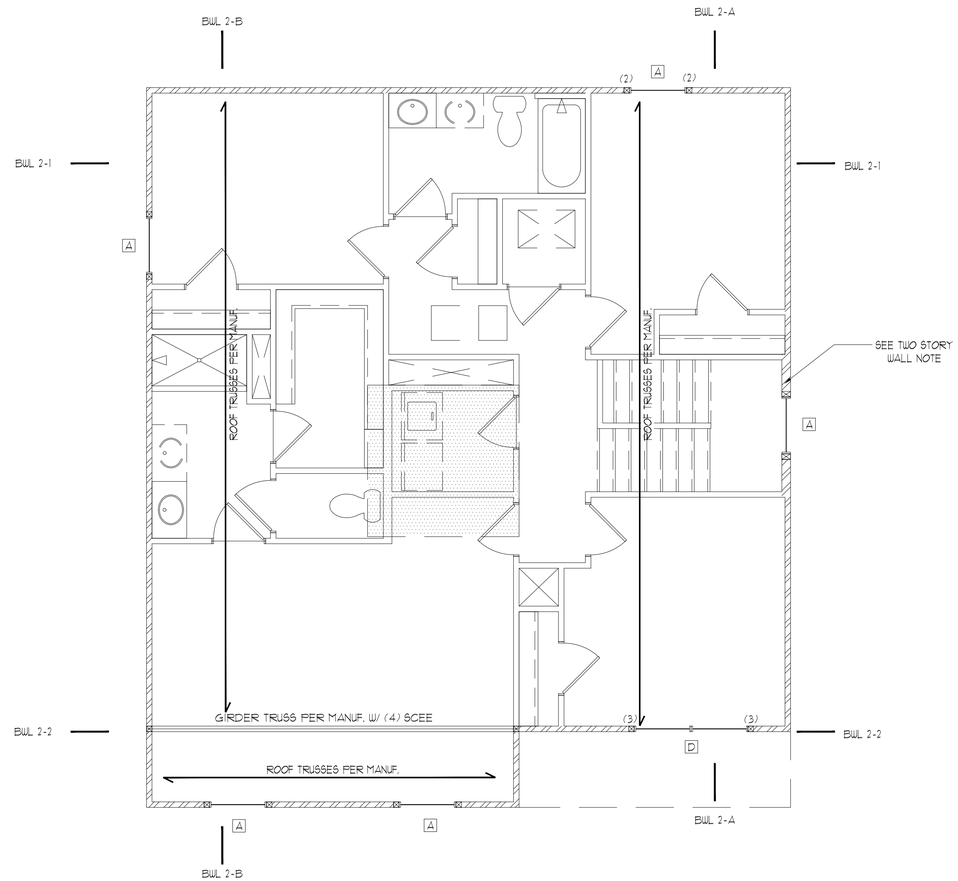

ELEVATIONS D, E, F,

SECOND FLOOR BRACING (FT)

CONTINUOUS SHEATHING METHOD		
	REQUIRED	PROVIDED
BWL 2-1	5.2	31.0
BWL 2-2	5.2	22.0
BWL 2-A	4.5	27.0
BWL 2-B	4.5	35.0

SECOND FLOOR BRACING (FT)

CONTINUOUS SHEATHING METHOD - OPT OWNERS BATH		
	REQUIRED	PROVIDED
BWL 2-1	5.2	31.0
BWL 2-2	5.2	22.0
BWL 2-A	4.5	27.0
BWL 2-B	4.5	35.0

HEADER SCHEDULE

TAG	SIZE	JACKS (EACH END)
A	(2) 2x6	(1)
B	(2) 2x8	(2)
C	(2) 2x10	(2)
D	(2) 2x12	(2)
E	(2) 9-1/4" LSL/LVL	(3)
F	(3) 2x6	(1)
G	(3) 2x8	(2)
H	(3) 2x10	(2)
I	(3) 2x12	(2)

NOTES:
1. HEADER SIZES SHOWN ON PLANS ARE MINIMUMS. GREATER HEADER SIZES MAY BE USED FOR EASE OF CONSTRUCTION.
2. ALL HEADERS TO BE DROPPED (U.N.O.).
3. STUD COLUMNS NOTED ON PLAN OVERRIDE STUD COLUMNS LISTED ABOVE (U.N.O.).

KING STUD SCHEDULE

MAXIMUM HEADER SPAN	MINIMUM KING STUDS E.E.
4'-0"	(1)
6'-0"	(2)
8'-0"	(2)
10'-0"	(3)
12'-0"	(3)
14'-0"	(3)
16'-0"	(4)
18'-0"	(4)

WALL STUD SCHEDULE (10 FT HEIGHT)

STUD SIZE	STUD SPACING (O.C.)			
	ROOF ONLY	ROOF & 1 FLOOR	ROOF & 2 FLOORS	NON-LOAD BEARING
2x4	24"	16"	12"	24"
2x6	24"	24"	16"	24"

NOTES:
1. BRACED WALLS STUDS SHALL BE A MAX. OF 16" O.C.
2. STUDS SUPPORTS OPTIONAL WALK-UP ATTIC SHALL BE SPACED A MAX. OF 16" O.C.
3. TWO STORY WALLS SHALL BE FRAMED w/ 2x4 STUDS @ 12" O.C. OR 2x6 STUDS @ 16" O.C. BALLOON FRAMED w/ HORIZ. BLOCKING @ 6'-0" O.C. VERTICALLY.

LINTEL SCHEDULE

TAG	SIZE	OPENING SIZE
1	L3x3x1/4"	LESS THAN 6'-0"
2	L5x3x1/4"	6'-0" TO 10'-0"
3	L5x3-1/2x5/16"	GREATER THAN 10'-0"
4	L5x3-1/2x5/16" ROLLED OR EQUIV.	ALL ARCHED OPENINGS
SECURE LINTEL TO HEADER w/ (2) 1/2" DIAMETER LAG SCREWS STAGGERED @ 16" O.C. (TYP FOR 3)		
ALL HEADERS WHERE BRICK IS USED, TO BE: 1 (UNO)		

SHADED WALLS INDICATED LOAD BEARING WALLS

NOTE: REDUCE JOIST SPACING UNDER TILE FLOORS, GRANITE COUNTERTOPS AND/OR ISLANDS.

JOIST & BEAM SIZES SHOWN ARE MINIMUMS. BUILDER MAY INCREASE DEPTH FOR EASE OF CONSTRUCTION.

NOTE:
— — — DESIGNATES JOIST SUPPORTED LOAD BEARING WALL ABOVE. PROVIDE BLOCKING UNDER JOIST SUPPORTED LOAD BEARING WALL.

NOTE: MEMBERS NOTED AS PRESSURE TREATED MAY BE FRAMED WITH NON-PRESSURE TREATED LUMBER PROVIDED THE ENTIRETY OF THE MEMBER IS WRAPPED TO PREVENT MOISTURE INTRUSION.

INSTALL HOLD-DOWNS FOR BRACED WALL END CONDITIONS PER SECTION R602.10.8 & FIGURE R602.10.1 OF THE 2018 NCRC.

NOTE: WALL SHEATHING AND FASTENERS HAVE BEEN DESIGNED TO RESIST THE CONTINUOUS WIND UPLIFT LOAD PATH IN ACCORDANCE WITH METHOD 3 OF SECTION R602.3.5 OF THE 2018 NCRC.

SUMMIT
ENGINEERING • LABORATORY • TESTING
A Universal Engineering Sciences Company
2520 Whitehall Park Dr. Suite 250
Charlotte, NC. 28273
Office: 704.504.1717
Fax: 704.504.1725
www.summit-companies.com

NORTH CAROLINA CERTIFICATE OF AUTHORIZATION
SUMMIT Engineering, Laboratory & Testing, Inc.
No. F-1454

CLIENT:
DR Horton, Inc.
8001 Arrowridge Blvd.
Charlotte, NC 28273

PROJECT:
BELHAVEN LH
Second Floor Framing Plan

NORTH CAROLINA PROFESSIONAL SEAL 052713 ENGINEER CHRISTOPHER T. BLACKWELL
3/31/23

STRUCTURAL MEMBERS ONLY

DRAWING
DATE: 03/23/2023
SCALE: 22x34 1/4"=1'-0"
8x11 1/8"=1'-0"
PROJECT #: 0920.21065
DRAWN BY: EO
CHECKED BY: JCEF

ORIGINAL INFORMATION
PROJECT # DATE
22199 4/12/2019

REFER TO COVER SHEET FOR A COMPLETE LIST OF REVISIONS

SHEET
S4.1

TRUSS UPLIFT CONNECTOR SCHEDULE

MAX. UPLIFT	ROOF TO WALL	FLOOR TO FLOOR	FLOOR TO FND
600 LBS	H2.5A	PER WALL SHEATHING & FASTENERS	
1200 LBS	(2) H2.5A	CS16 (END = 11")	DTT2Z
1450 LBS	HTS20	CS16 (END = 11")	DTT2Z
2000 LBS	(2) MTS20	(2) CS16 (END = 11")	DTT2Z
2900 LBS	(2) HTS20	(2) CS16 (END = 11")	HTT4
3685 LBS	LGT3-SDS2.5	MSTC52	HTT4

1. ALL PRODUCTS LISTED ARE SIMPSON STRONG-TIE. EQUIVALENT PRODUCTS MAY BE USED PER MANUFACTURER'S SPECIFICATIONS.
2. UPLIFT VALUES LISTED ARE FOR SYP #2 GRADE MEMBERS.
3. REFER TO TRUSS LAYOUT PER MANUF. FOR UPLIFT VALUES AND TRUSS TO TRUSS CONNECTIONS. CONNECTORS SPECIFIED BY TRUSS MANUFACTURER OVERRIDE THOSE LISTED ABOVE.
4. CONTACT SUMMIT FOR REQUIRED CONNECTORS WHEN LOADS EXCEED THOSE LISTED ABOVE.

NOTE: 1ST PLY OF ALL SHOWN GIRDER TRUSSES TO ALIGN WITH INSIDE FACE OF WALL (TYP, UNO)

NOTE: ROOF TRUSSES SHALL BE SPACED TO SUPPORT FALSE FRAMED DORMER WALLS (TYP, UNO)

REFER TO DETAIL 5/D3F FOR EYEBROW, RETURN OR SHED ROOF FRAMING REQUIREMENTS. (TYP FOR ROOFS PROTRUDING MAXIMUM 24" FROM STRUCTURE)

NOTE: TRUSS UPLIFT LOADS SHALL BE DETERMINED PER TRUSS MANUFACTURER IN ACCORDANCE WITH SECTION R802.11.1. WALL SHEATHING AND FASTENERS HAVE BEEN DESIGNED TO RESIST THE WIND UPLIFT LOAD PATH IN ACCORDANCE WITH METHOD 3 OF SECTION R602.3.5 OF THE 2018 NCRC. REFER TO BRACED WALL PLANS FOR SHEATHING AND FASTENER REQUIREMENTS.

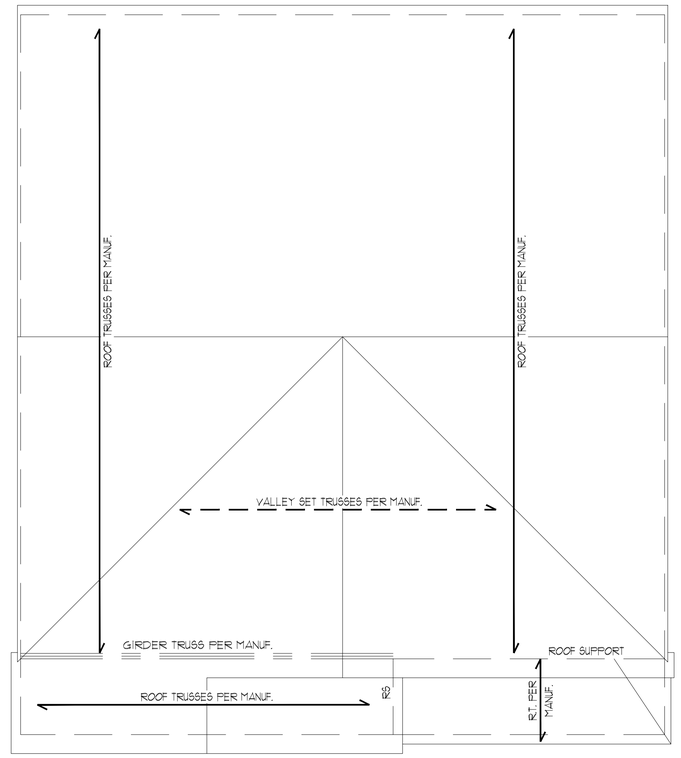

ROOF PLAN
ELEVATIONS D, E, F

THESE PLANS ARE DESIGNED IN ACCORDANCE WITH ARCHITECTURAL PLANS PROVIDED BY DR HORTON COMPLETED/REVISED ON 03/06/2023. IT IS THE RESPONSIBILITY OF THE CLIENT TO NOTIFY SUMMIT ENGINEERING, LABORATORY & TESTING, INC. IF ANY CHANGES ARE MADE TO THE ARCHITECTURAL PLANS PRIOR TO CONSTRUCTION. SUMMIT ENGINEERING, LABORATORY & TESTING, Inc. CANNOT GUARANTEE THE ADEQUACY OF THESE STRUCTURAL PLANS WHEN USED WITH ARCHITECTURAL PLANS DATED DIFFERENTLY THAN THE DATE LISTED ABOVE.

STRUCTURAL MEMBERS ONLY

ENGINEERING SEAL APPLIES ONLY TO STRUCTURAL COMPONENTS ON THIS DOCUMENT, SEAL DOES NOT INCLUDE CONSTRUCTION MEANS, METHODS, TECHNIQUES, SEQUENCES, PROCEDURES OR SAFETY PRECAUTIONS. ANY DEVIATIONS OR DISCREPANCIES ON PLANS ARE TO BE BROUGHT TO THE IMMEDIATE ATTENTION OF SUMMIT ENGINEERING, LABORATORY & TESTING, INC. FAILURE TO DO SO WILL VOID SUMMIT LIABILITY.

STRUCTURAL ANALYSIS BASED ON 2018 NCRC.

ROOF FRAMING PLAN

SCALE: 1/4"=1'-0" ON 22"X34" OR 1/8"=1'-0" ON 11"X17"

SUMMIT
ENGINEERING • LABORATORY • TESTING
A Universal Engineering Sciences Company
2520 Whitehall Park Dr. Suite 250
Charlotte, NC. 28273
Office: 704.504.1717
Fax: 704.504.1725
www.summit-companies.com

NORTH CAROLINA CERTIFICATE OF AUTHORIZATION
SUMMIT Engineering, Laboratory & Testing, Inc.
No. F-1454

CLIENT:
DR Horton, Inc.
8001 Arrowridge Blvd.
Charlotte, NC 28273

PROJECT:
BELHAVEN LH
Roof Framing Plan

NORTH CAROLINA PROFESSIONAL SEAL 052243 ENGINEER CHRISTOPHER T. BLACKWELL
3/31/23

STRUCTURAL MEMBERS ONLY

DRAWING
DATE: 03/23/2023
SCALE: 2x34 1/4"=1'-0"
8x11 1/8"=1'-0"
PROJECT #: 05287.0165
DRAWN BY: EO
CHECKED BY: JCBF

ORIGINAL INFORMATION
PROJECT # DATE
22193 4/3/2019

REFER TO COVER SHEET FOR A COMPLETE LIST OF REVISIONS

SHEET
S5.1

DESIGN SPECIFICATIONS:

Construction Type: Commerical ☐ Residential ☒

Applicable Building Codes:
- 2018 North Carolina Residential Building Code with All Local Amendments
- ASCE 7–10: Minimum Design Loads for Buildings and Other Structures

Design Loads:
1. Roof Live Loads
   - 1.1. Conventional 2x ..... 20 PSF
   - 1.2. Truss ..... 20 PSF
     - 1.2.1. Attic Truss ..... 60 PSF
2. Roof Dead Loads
   - 2.1. Conventional 2x ..... 10 PSF
   - 2.2. Truss ..... 20 PSF
3. Snow ..... 15 PSF
   - 3.1. Importance Factor 1.0
4. Floor Live Loads
   - 4.1. Typ. Dwelling ..... 40 PSF
   - 4.2. Sleeping Areas ..... 30 PSF
   - 4.3. Decks ..... 40 PSF
   - 4.4. Passenger Garage ..... 50 PSF
5. Floor Dead Loads
   - 5.1. Conventional 2x ..... 10 PSF
   - 5.2. I–Joist ..... 15 PSF
   - 5.3. Floor Truss ..... 15 PSF
6. Ultimate Wind Speed (3 sec. gust) ..... PER PLAN
7. Exposure ..... B
   - 7.1. Importance Factor 1.0
8. Component and Cladding (in PSF)

MEAN ROOF HT.	UP TO 30'	30'1"–35'	35'1"–40'	40'1"–45'
ZONE 1	16.7,–18.0	17.5,–18.9	18.2,–19.6	18.7,–20.2
ZONE 2	16.7,–21.0	17.5,–22.1	18.2,–22.9	18.7,–23.5
ZONE 3	16.7,–21.0	17.5,–22.1	18.2,–22.9	18.7,–23.5
ZONE 4	18.2,–19.0	19.2,–20.0	19.9,–20.7	20.4,–21.3
ZONE 5	18.2,–24.0	19.2,–25.2	19.9,–26.1	20.4,–26.9

9. Seismic
   - 9.1. Site Class ..... D
   - 9.2. Design Category C
   - 9.3. Importance Factor 1.0
   - 9.4. Seismic Use Group 1
   - 9.5. Basic Structural System (check one)
     - ☒ Bearing Wall
     - ☐ Building Frame
     - ☐ Moment Frame
     - ☐ Dual w/ Special Moment Frame
     - ☐ Dual w/ Intermediate R/C or Special Steel
     - ☐ Inverted Pendulum
   - 9.6. Arch/Mech Components Anchored ..... No
   - 9.7. Lateral Design Control: Seismic ☐ Wind☒
10. Assumed Soil Bearing Capacity 2000psf

UES™

UES PROFESSIONAL SOLUTIONS 29, INC

FORMERLY SUMMIT ENGINEERING, LABORATORY, & TESTING INC.

STRUCTURAL PLANS PREPARED FOR:

STANDARD DETAILS (OX–IS)

PROJECT ADDRESS:
TBD

OWNER:
DR Horton Carolinas Division
8001 Arrowridge Blvd
Charlotte, NC 28273

ARCHITECT/DESIGNER:
GMD Design Group
1845 Satellite Blvd.
Duluth, GA 30097

These drawings are to be coordinated with the architectural, mechanical, plumbing, electrical, and civil drawings. This coordination is not the responsibility of the structural engineering of record (SER). Should any discrepancies become apparent, the contractor shall notify UES Professional Solutions 29, Inc. (UES) before construction begins.

PLAN ABBREVIATIONS:

AB	ANCHOR BOLT	PT	PRESSURE TREATED
AFF	ABOVE FINISHED FLOOR	RS	ROOF SUPPORT
CJ	CEILING JOIST	SC	STUD COLUMN
CLR	CLEAR	SJ	SINGLE JOIST
DJ	DOUBLE JOIST	SPF	SPRUCE PINE FIR
DSP	DOUBLE STUD POCKET	SST	SIMPSON STRONG–TIE
EE	EACH END	SYP	SOUTHERN YELLOW PINE
EW	EACH WAY	TJ	TRIPLE JOIST
NTS	NOT TO SCALE	TSP	TRIPLE STUD POCKET
OC	ON CENTER	TYP	TYPICAL
PSF	POUNDS PER SQUARE FOOT	UNO	UNLESS NOTED OTHERWISE
PSI	POUNDS PER SQUARE INCH	WWF	WELDED WIRE FABRIC

Roof truss and floor joist layouts, and their corresponding loading details, were not provided to UES Professional Solutions 29, Inc. (UES) prior to the initial design. Therefore, truss and joist directions were assumed based on the information provided by DR Horton, Inc. Subsequent plan revisions based on roof truss and floor joist layouts shall be noted in the revision list, indicating the date the layouts were provided. Should any discrepancies become apparent, the contractor shall notify UES immediately.

SHEET LIST:

Sheet No.	Description
CS1	Cover Sheet, Specifications, Revisions
D1m	Monolithic Slab Foundation Details
D1s	Stem Wall Foundation Details
D1c	Crawl Space Foundation Details
D1b	Basement Foundation Details
D1f	Framing Details

REVISION LIST:

Revision No.	Date	Project No.	Description
1	5.11.17		Added box bay detail (2/D2f). Added deck options with basement. Revised deck options with stem wall and crawl space foundations
2	7.12.17		Revised stem wall insulation note.
3	2.15.18		Revised garage door detail, NC only
4	2.28.18		Added high–wind foundation details
5	12.19.18		Revised per 2018 NCRC
6	2.19.19		Revised per Mecklenburg County Comments
7	3.1.19		Revised stem wall deck attachment and roof sheathing on wall sections.
8	3.6.19		Corrected dimensions at perimeter footings
9	3.2.20		Added tall turndown detail
10	3.18.20		Added balloon framing detail
11	10.20.20		Added alternate two–pour detail for slab and added note for crawl girder above grade
12	3.1.21		Added OX–IS Standard Details
13	5.18.21		Updated OX–IS Standard Details
14	02.14.23		Added 4/D2m – Tall Slab Detail w/ Siding
15	08.10.23		Updated (Hit HY150 Adhesive) for HY200 Adhesive
16	04.01.24		Added Hilti Kwik Bolt KBI 1/2–5 TO Wall Anchor Schedule
17	4.26.24		Update Wall Anchor Schedule
18	5.06.24		Update Wall Anchor Schedule

DR HORTON PROJECT SIGN–OFF:

Manager	Signature
Operations	
Operations System	
Operations Product Development	

GENERAL STRUCTURAL NOTES:

1. The design professional whose seal appears on these drawings is the structural engineer of record (SER) for this project. The SER bears the responsibility of the primary structural elements and the performance of this structure. No other party may revise, alter, or delete any structural aspects of these construction documents without written permission of UES Professional Solutions 29, Inc. (UES) or the SER. For the purposes of these construction documents the SER and UES shall be considered the same entity.
2. The structure is only stable in its completed form. The contractor shall provide all required temporary bracing during construction to stabilize the structure.
3. The SER is not responsible for construction sequences, methods, or techniques in connection with the construction of this structure. The SER will not be held responsible for the contractor's failure to conform to the contract documents, should any non–conformities occur.
4. Any structural elements or details not fully developed on the construction drawings shall be completed under the direction of a licensed professional engineer. These shop drawings shall be submitted to UES for review before any construction begins. The shop drawings will be reviewed for overall compliance as it relates to the structural design of this project. Verification of the shop drawings for dimensions, or for actual field conditions, is not the responsibility of the SER or UES.
5. Verification of assumed field conditions is not the responsibility of the SER. The contractor shall verify the field conditions for accuracy and report any discrepancies to UES before construction begins.
6. The SER is not responsible for any secondary structural elements or non–structural elements, except for the elements specifically noted on the structural drawings.
7. This structure and all construction shall conform to all applicable sections of the international residential code.
8. This structure and all construction shall conform to all applicable sections of local building codes.
9. All structural assemblies are to meet or exceed to requirements of the current local building code.

FOUNDATIONS:

1. The structural engineer has not performed a subsurface investigation. Verification of this assumed value is the responsibility of the owner or the contractor. Should any adverse soil condition be encountered the SER must be contacted before proceeding.
2. The bottom of all footings shall extend below the frost line for the region in which the structure is to be constructed. However, the bottom of all footings shall be a minimum of 12" below grade.
3. Any fill shall be placed under the direction or recommendation of a licensed professional engineer.
4. The resulting soil shall be compacted to a minimum of 95% maximum dry density.
5. Excavations of footings shall be lined temporarily with a 6 mil polyethylene membrane if placement of concrete does not occur within 24 hours of excavation.
6. No concrete shall be placed against any subgrade containing water, ice, frost, or loose material.

STRUCTURAL STEEL:

1. Structural steel shall be fabricated and erected in accordance with the American Institute of Steel Construction "Code of Standard Practice for Steel Buildings and Bridges" and the manual of Steel Construction "Load Resistance Factor Design" latest editions.
2. Structural steel shall receive one coat of shop applied rust–inhibitive paint.
3. All steel shall have a minimum yield stress (F_y) of 36 ksi unless otherwise noted.
4. Welding shall conform to the latest edition of the American Welding Society's Structural Welding Code AWS D1.1. Electrodes for shop and field welding shall be class E70XX. All welding shall be performed by a certified welder per the above standards.

CONCRETE:

1. Concrete shall have a normal weight aggregate and a minimum compressive strength (f'_c) at 28 days of 3000 psi, unless otherwise noted on the plan.
2. Concrete shall be proportioned, mixed, and placed in accordance with the latest editions of ACI 318: "Building Code Requirements for Reinforced Concrete" and ACI 301: "Specifications for Structural Concrete for Buildings".
3. Air entrained concrete must be used for all structural elements exposed to freeze/thaw cycles and deicing chemicals. Air entrainment amounts (in percent) shall be within –1% to +2% of target values as follows:
   - 3.1. Footings: 5%
   - 3.2. Exterior Slabs: 5%
4. No admixtures shall be added to any structural concrete without written permission of the SER.
5. Concrete slabs–on–grade shall be constructed in accordance with ACI 302.1R–96: "Guide for Concrete Slab and Slab Construction".
6. The concrete slab–on–grade has been designed using a subgrade modulus of k=250 pci and a design loading of 200 psf. The SER is not responsible for differential settlement, slab cracking or other future defects resulting from unreported conditions not in accordance with the above assumptions.
7. Control or saw cut joints shall be spaced in interior slabs–on–grade at a maximum of 15'–0" O.C. and in exterior slabs–on–grade at a maximum of 10'–0" unless otherwise noted.
8. Control or saw cut joints shall be produced using conventional process within 4 to 12 hours after the slab has been finished
9. Reinforcing steel may not extend through a control joint. Reinforcing steel may extend through a saw cut joint.
10. All welded wire fabric (W.W.F.) for concrete slabs–on–grade shall be placed at mid–depth of slab. The W.W.F. shall be securely supported during the concrete pour.

CONCRETE REINFORCEMENT:

1. Fibrous concrete reinforcement, or fibermesh, specified in concrete slabs–on–grade may be used for control of cracking due to shrinkage and thermal expansion/contraction, lowered water migration, an increase in impact capacity, increased abrasion resistance, and residual strength.
2. Fibermesh reinforcing to be 100% virgin polypropylene fibers containing no reprocessed olefin materials and specifically manufactured for use as concrete secondary reinforcement.
3. Application of fibermesh per cubic yard of concrete shall equal a minimum of 0.1% by volume (1.5 pounds per cubic yard)
4. Fibermesh shall comply with ASTM C1116, any local building code requirements, and shall meet or exceed the current industry standard.
5. Steel reinforcing bars shall be new billet steel conforming to ASTM A615, grade 60.
6. Detailing, fabrication, and placement of reinforcing steel shall be in accordance with the latest edition of ACI 315: "Manual of Standard Practice for Detailing Concrete Structures"
7. Horizontal footing and wall reinforcement shall be continuous and shall have 90° bends, or corner bars with the same size/spacing as the horizontal reinforcement with a class B tension splice.
8. Lap reinforcement as required, a minimum of 40 bar diameters for tension or compression unless otherwise noted. Splices in masonry shall be a minimum of 48 bar diameters.
9. Where reinforcing dowels are required , they shall be equivalent in size and spacing to the vertical reinforcement. The dowel shall extend 48 bar diameters vertically and 20 bar diameters into the footing.
10. Where reinforcing steel is required vertically, dowels shall be provided unless otherwise noted.
11. Unless otherwise specified, concrete reinforcing is not required.

WOOD FRAMING:

1. Solid sawn wood framing members shall conform to the specifications listed in the latest edition of the "National Design Specification for Wood Construction" (NDS). Unless otherwise noted, all wood framing members are designed to be Spruce–Yellow–Pine (SYP) #2.
2. LVL or PSL engineered wood shall have the following minimum design values:
   - 2.1. E = 1,900,000 psi
   - 2.2. F_b = 2600 psi
   - 2.3. F_v = 285 psi
   - 2.4. F_c = 700 psi
3. Wood in contact with concrete, masonry, or earth shall be pressure treated in accordance with AWPA standard C–15. All other moisture exposed wood shall be treated in accordance with AWPA standard C–2
4. Nails shall be common wire nails unless otherwise noted.
5. Lag screws shall conform to ANSI/ASME standard B18.2.1–1981. Lead holes for lag screws shall be in accordance with NDS specifications.
6. All beams shall have full bearing on supporting framing members unless otherwise noted.
7. Exterior and load bearing stud walls are to be 2x4 SYP #2 @ 16" O.C. unless otherwise noted. Studs shall be continuous from the sole plate to the double top plate. Studs shall only be discontinuous at headers for window/door openings. A minimum of one king stud shall be placed at each end of the header. King studs shall be continuous.
8. Individual studs forming a column shall be attached with one 10d nail @ 6" O.C. staggered. The stud column shall be continuous to the foundation or beam. The column shall be properly blocked at all floor levels to ensure proper load transfer.
9. Multi–ply beams shall have each ply attached with (3) 10d nails @ 24" O.C.
10. Flitch beams, 4–ply beams and 3–ply side loaded beams shall be bolted together with (2) rows of 1/2" diameter through bolts staggered @ 24" O.C. per schedule unless noted otherwise. Min. edge distance shall be 2" and (2) bolts shall be located a min. 6" from each end of the beam.

WOOD TRUSSES:

1. The wood truss manufacturer/fabricator is responsible for the design of the wood trusses. Submit sealed shop drawings and supporting calculations to the SER for review prior to fabrication. The SER shall have a minimum of five (5) days for review. The review by the SER shall review for overall compliance with the design documents. The SER shall assume no responsibility for the correctness for the structural design for the wood trusses.
2. The wood trusses shall be designed for all required loadings as specified in the local building code, the ASCE Standard "Minimum Design Loads for Buildings and Other Structures." (ASCE 7–05), and the loading requirements shown on these specifications. The truss drawings shall be coordinated with all other construction documents and provisions provided for loads shown on these drawings including but not limited to HVAC equipment, piping, and architectural fixtures attached to the trusses.
3. The trusses shall be designed, fabricated, and erected in accordance with the latest edition of the "National Design Specification for Wood Construction." (NDS) and "Design Specification for Metal Plate Connected Wood Trusses."
4. The truss manufacturer shall provide adequate bracing information in accordance with "Commentary and Recommendations for Handling, Installing, and Bracing Metal Plate Connected Wood Trusses" (HIB–91). This bracing, both temporary and permanent, shall be shown on the shop drawings. Also, the shop drawings shall show the required attachments for the trusses.
5. Any chords or truss webs shown on these drawings have been shown as a reference only. The final design of the trusses shall be per the manufacturer.

EXTERIOR WOOD FRAMED DECKS:

1. Decks are to be framed in accordance with local building codes and as referenced on the structural plans, either through code references or construction details.

WOOD STRUCTURAL PANELS:

1. Fabrication and placement of structural wood sheathing shall be in accordance with the APA Design/Construction Guide "Residential and Commercial," and all other applicable APA standards.
2. All structurally required wood sheathing shall bear the mark of the APA.
3. Wood wall sheathing shall comply with the requirements of local building codes for the appropriate state as indicated on these drawings. Refer to wall bracing notes in plan set for more information. Sheathing shall be applied with the long direction perpendicular to framing, unless noted otherwise.
4. Roof sheathing shall be APA rated sheathing exposure 1 or 2. Roof sheathing shall be continuous over two supports and attached to its supporting roof framing with (1)–8d CC nail at 6"o/c at panel edges and at 12"o/c in panel field unless otherwise noted on the plans. Sheathing shall be applied with the long direction perpendicular to framing. Sheathing shall have a span rating consistent with the framing spacing. Use suitable edge support by use of plywood clips or lumber blocking unless otherwise noted. Panel end joints shall occur over framing. Apply building paper over the sheathing as required by the state Building Code.
5. Wood floor sheathing shall be APA rated sheathing exposure 1 or 2. Attach sheathing to its supporting framing with (1)–8d CC ringshank nail at 6"o/c at panel edges and at 12"o/c in panel field unless otherwise noted on the plans. Sheathing shall be applied perpendicular to framing. Sheathing shall have a span rating consistent with the framing spacing. Use suitable edge support by use of T&G plywood or lumber blocking unless otherwise noted. Panel end joints shall occur over framing. Apply building paper over the sheathing as required by the state Building Code.
6. Sheathing shall have a 1/8" gap at panel ends and edges as recommended in accordance with the APA.

UES™
UES PROFESSIONAL SOLUTIONS 29, INC.
FORMERLY SUMMIT ENGINEERING, LABORATORY, & TESTING, INC.
10121 Pineville Distribution St
Pineville, NC 28134
Office: 704.504.1717
Fax: 704.504.1725
www.heamues.com

NORTH CAROLINA — UES PROFESSIONAL SOLUTIONS 29, INC. No. F-1454 — CERTIFICATE OF AUTHORIZATION

CLIENT:
DR Horton Carolina Division
8001 Arrowridge Blvd.
Charlotte, NC 28273

PROJECT:
Standard Details (OX–IS)
Coversheet

05.06.2024
NORTH CAROLINA PROFESSIONAL SEAL 020222 ENGINEER GEORGE W. SANFORD

STRUCTURAL MEMBERS ONLY

DRAWING
DATE: 05/06/2024
SCALE: 22x34 1/4"=1'-0"
11x17 1/8"=1'-0"
PROJECT #: A21117.00066.000
DRAWN BY: MGC
CHECKED BY: GWS

ORIGINAL INFORMATION
PROJECT # DATE
1/31/2017

REFER TO COVER SHEET FOR A COMPLETE LIST OF REVISIONS

SHEET
CS1

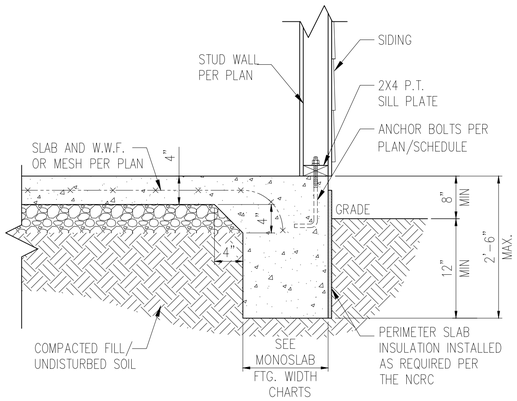

STANDARD – SIDING

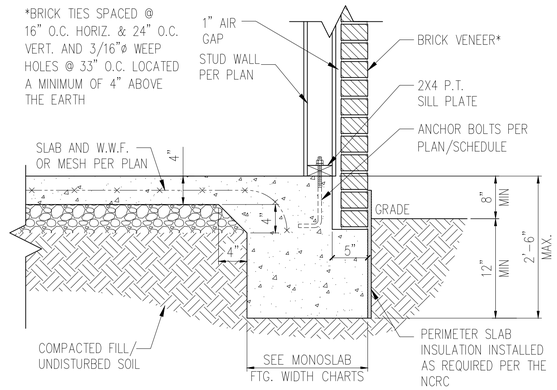

STANDARD – BRICK

1 D1m TYP. SLAB DETAIL
N.T.S.

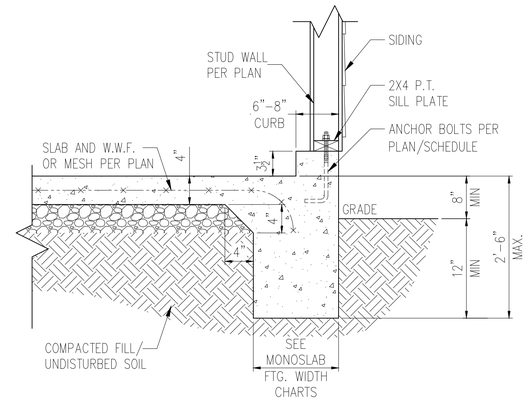

STANDARD – SIDING

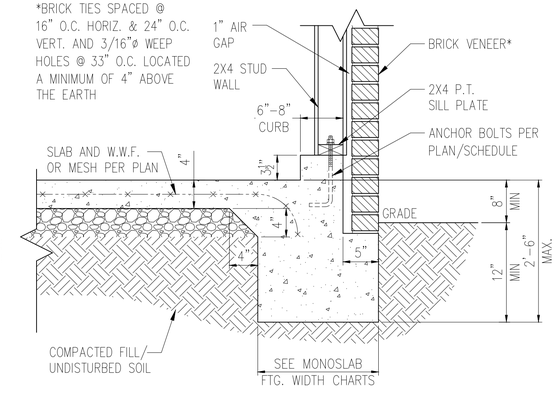

STANDARD – BRICK

2 D1m TYP. GARAGE CURB DETAIL
N.T.S

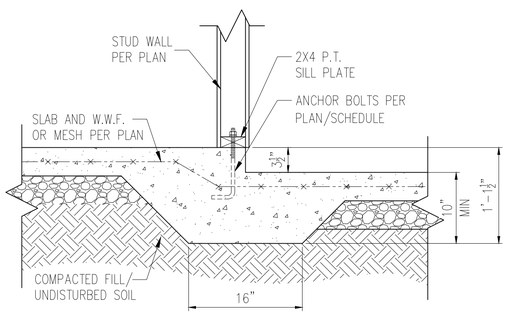

3 D1m STEP IN GARAGE
N.T.S.

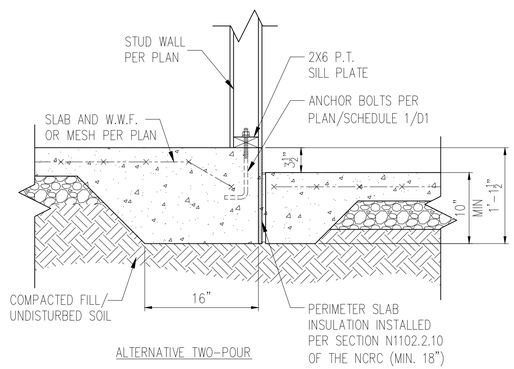

ALTERNATIVE TWO-POUR

3A D1m ALTERNATE TWO-POUR DETAIL
N.T.S.

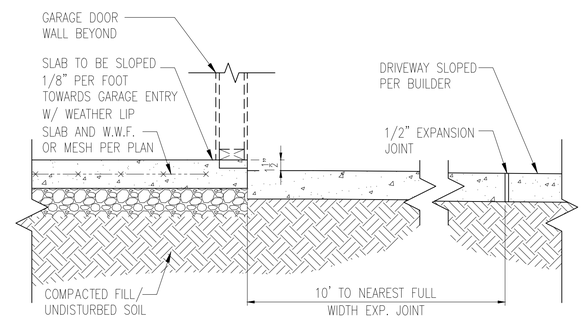

4 D1m SLAB AT GARAGE DOOR
N.T.S.

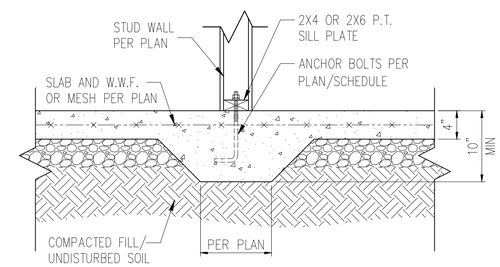

5 D1m TYP. THICKENED SLAB DETAIL
N.T.S.

MONOLITHIC FOOTING WIDTH

# OF STORIES	WIDTH BASED ON SOIL BEARING CAPACITY		
	1500 PSF	2000 PSF	2500 PSF
1 STORY – STD.	16"	16"	16"
1 STORY – BRICK VENEER	21"*	21"*	21"*
2 STORY – STD.	16"	16"	16"
2 STORY – BRICK VENEER	21"*	21"*	21"*
3 STORY – STD.	23"	18"	18"
3 STORY – BRICK VENEER	32"*	24"*	24"*
*5" BRICK LEDGE HAS BEEN ADDED TO THE MONOLITHIC FOOTING WIDTH FOR BRICK SUPPORT			

WALL ANCHOR SCHEDULE

TYPE OF ANCHOR	MIN. CONC. EMBEDMENT	SPACING	INTERIOR WALL	EXTERIOR WALL
1/2"ø A307 BOLTS w/ STD. 90° BEND	7"	6'-0"	YES	YES
SST – MAS	4"	5'-0"	NO	YES
SIMPSON TITEN HD 1/2"ø – 8"	6-1/2"	6'-0"	YES	YES
1/2"ø HILTI THREADED ROD w/ HIT HY150 ADHESIVE	7"	6'-0"	YES	YES
1/2"ø HILTI KWIK BOLT, SST WEDGE-ALL, OR EQUIVALENT WEDGE ANCHORE	7"	6'-0"	YES	YES -2

NOTE: 1. INSTALL ALL ANCHORS 12" MAX. FROM ALL BOTTOM PLATE ENDS AND JOINTS.
2. EXPANSION ANCHORS MAY BE INSTALLED ONLY AS ALLOWED PER MANUFACTURE SPECIFICATIONS.

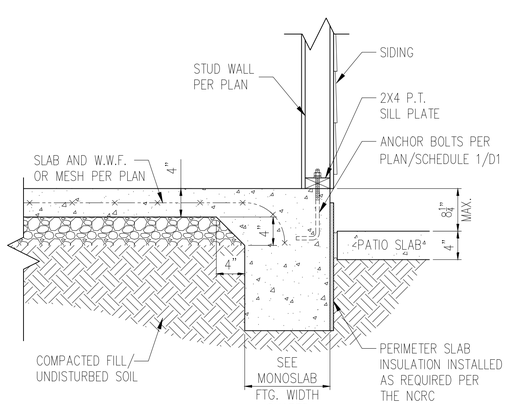

STANDARD – SIDING

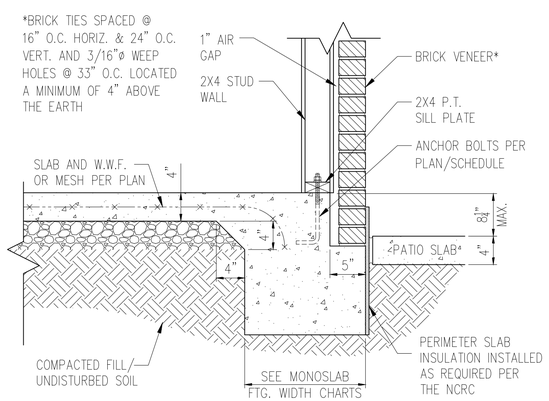

STANDARD – BRICK

6 D1m PATIO SLAB DETAIL
N.T.S.

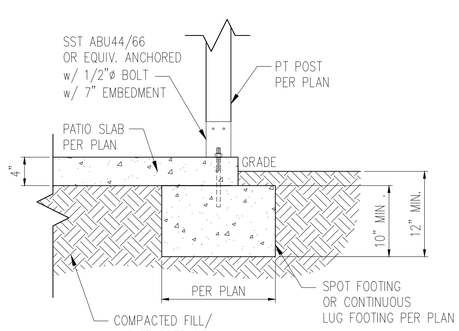

6A D1m COVERED PATIO DETAIL
N.T.S.

NOTES:
1. REFER TO GENERAL NOTES & SPECIFICATIONS ON COVERSHEET FOR ADDITIONAL INFORMATION.
2. PROVIDE 6 MIL VAPOR BARRIER UNDER ALL SLABS-ON-GRADE.
3. SEE ARCH. DWGS. FOR ALL TOP OF THE SLAB ELEVATIONS, SLOPES AND DEPRESSIONS.
4. REFER TO STRUCTURAL PLANS AND FRAMING DETAILS FOR BRACED WALL PANEL LAYOUT, DIMENSIONS, ATTACHMENT AND CONNECTIONS
5. REFER TO LOCAL AND STATEWIDE CODES FOR ADDITIONAL AMENDMENTS AND REQUIREMENTS NOT SHOWN
6. PERIMETER INSULATION SHOWN AS REQUIRED BY LOCAL CLIMATE ZONE. INSTALL PER TABLE N1102.1.2 OF THE 2018 NCRC

UES
UES PROFESSIONAL SOLUTIONS 29, INC.
FORMERLY SUMMIT ENGINEERING, LABORATORY, & TESTING, INC.
10121 Pineville Distribution St
Pineville, NC 28134
Office: 704.504.1717
Fax: 704.504.1725
www.hcamues.com

NORTH CAROLINA
UES PROFESSIONAL SOLUTIONS 29, INC.
No. F-1454
CERTIFICATE OF AUTHORIZATION

CLIENT:
DR Horton Carolina Division
8001 Arrowridge Blvd.
Charlotte, NC 28273

PROJECT:
Standard Details (QX-IS)
Monolithic Slab Foundation Details

05.06.2024
NORTH CAROLINA PROFESSIONAL SEAL 020222 ENGINEER GEORGE W. SANFORD
STRUCTURAL MEMBERS ONLY

DRAWING
DATE: 05/06/2024
SCALE: 22x34 1/4"=1'-0"
11x17 1/8"=1'-0"
PROJECT # A20117.00066.000
DRAWN BY: MGC
CHECKED BY: GWS

ORIGINAL INFORMATION
PROJECT # DATE
1/31/2017

REFER TO COVER SHEET FOR A COMPLETE LIST OF REVISIONS

SHEET
D1m

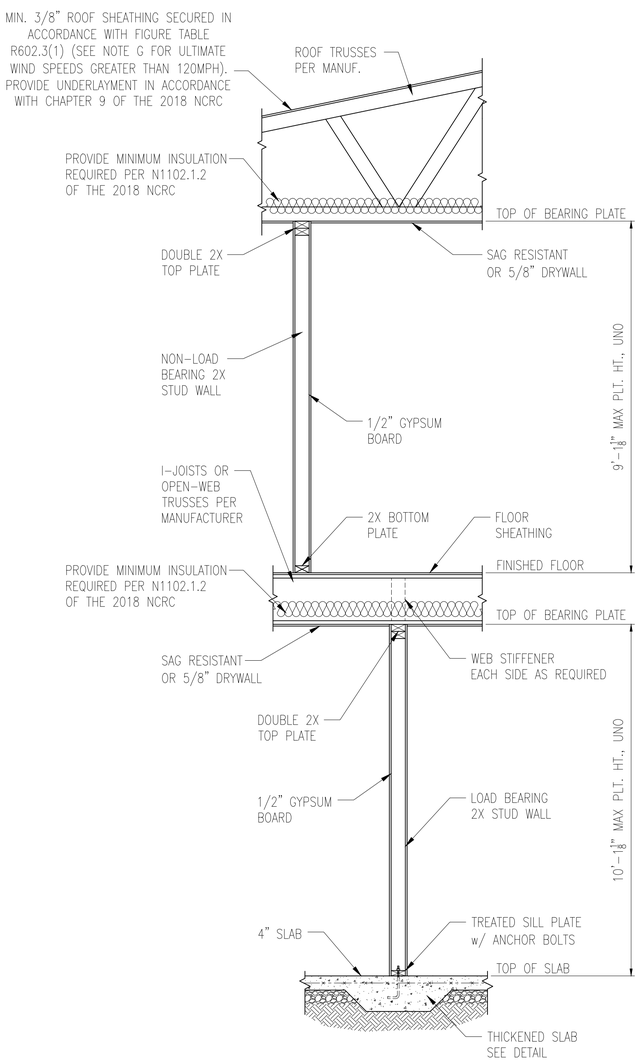

1 D2m TYP. INTERIOR LOAD BEARING WALL SECTION
N.T.S.

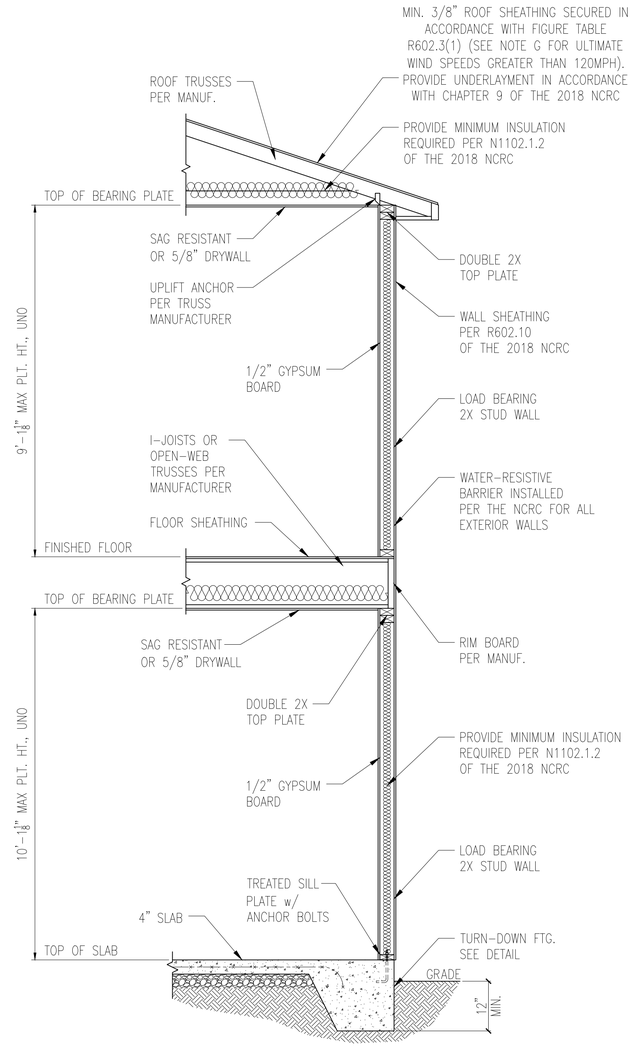

2 D2m TYP. EXTERIOR LOAD BEARING WALL SECTION
N.T.S.

-SIMILAR w/ BRICK AND STONE
-BRICK TIES SPACED @ 16" O.C. HORIZ. & 24" O.C. VERT.
-MIN. 3/16"ø WEEP HOLES @ 33" O.C.

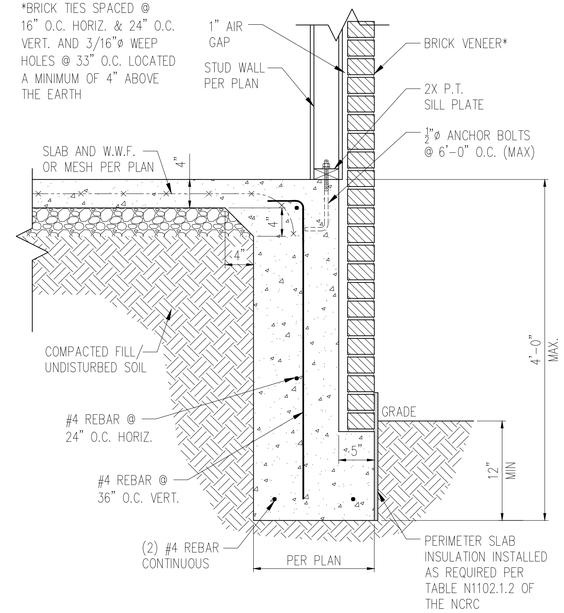

3 D2m TALL SLAB DETAIL w/ BRICK VENEER
N.T.S.

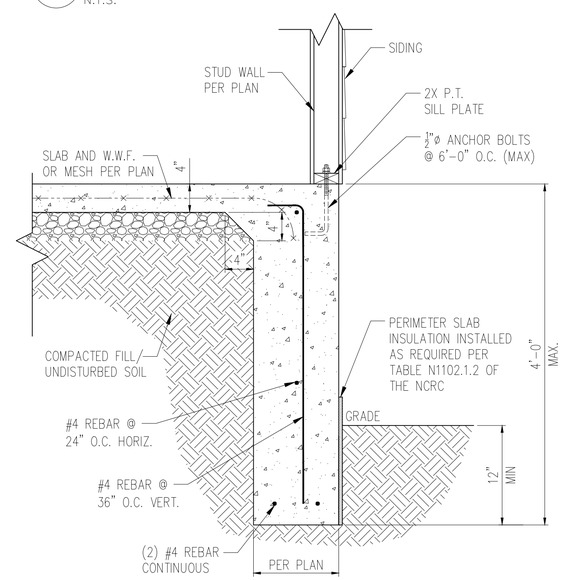

4 D2m TALL SLAB DETAIL w/ SIDING
N.T.S.

NOTES:
1. REFER TO GENERAL NOTES & SPECIFICATIONS ON COVERSHEET FOR ADDITIONAL INFORMATION.
2. PROVIDE 6 MIL VAPOR BARRIER UNDER ALL SLABS-ON-GRADE.
3. SEE ARCH. DWGS. FOR ALL TOP OF THE SLAB ELEVATIONS, SLOPES AND DEPRESSIONS.
4. REFER TO STRUCTURAL PLANS AND FRAMING DETAILS FOR BRACED WALL PANEL LAYOUT, DIMENSIONS, ATTACHMENT AND CONNECTIONS
5. REFER TO LOCAL AND STATEWIDE CODES FOR ADDITIONAL AMENDMENTS AND REQUIREMENTS NOT SHOWN
6. PERIMETER INSULATION SHOWN AS REQUIRED BY LOCAL CLIMATE ZONE. INSTALL PER TABLE N1102.1.2 OF THE 2018 NCRC

UES
UES PROFESSIONAL SOLUTIONS 29, INC.
FORMERLY SUMMIT ENGINEERING, LABORATORY, & TESTING, INC.
10121 Pineville Distribution St
Pineville, NC 28134
Office: 704.504.1717
Fax: 704.504.1725
www.teamues.com

NORTH CAROLINA CERTIFICATE OF AUTHORIZATION
UES PROFESSIONAL SOLUTIONS 29, INC.
No. F-1454

CLIENT:
DR Horton Carolina Division
8001 Arrowridge Blvd.
Charlotte, NC 28273

PROJECT:
Standard Details (OX-IS)
Monolithic Slab Foundation Details

05.06.2024
NORTH CAROLINA PROFESSIONAL SEAL 020222 ENGINEER GEORGE W. SANFORD
STRUCTURAL MEMBERS ONLY

DRAWING
DATE: 05/06/2024
SCALE: 22x34 1/4"=1'-0"
11x17 1/8"=1'-0"
PROJECT #: A21117.00066.000
DRAWN BY: MGC
CHECKED BY: GWS

ORIGINAL INFORMATION
PROJECT # DATE
1/31/2017

REFER TO COVER SHEET FOR A COMPLETE LIST OF REVISIONS

SHEET
D2m

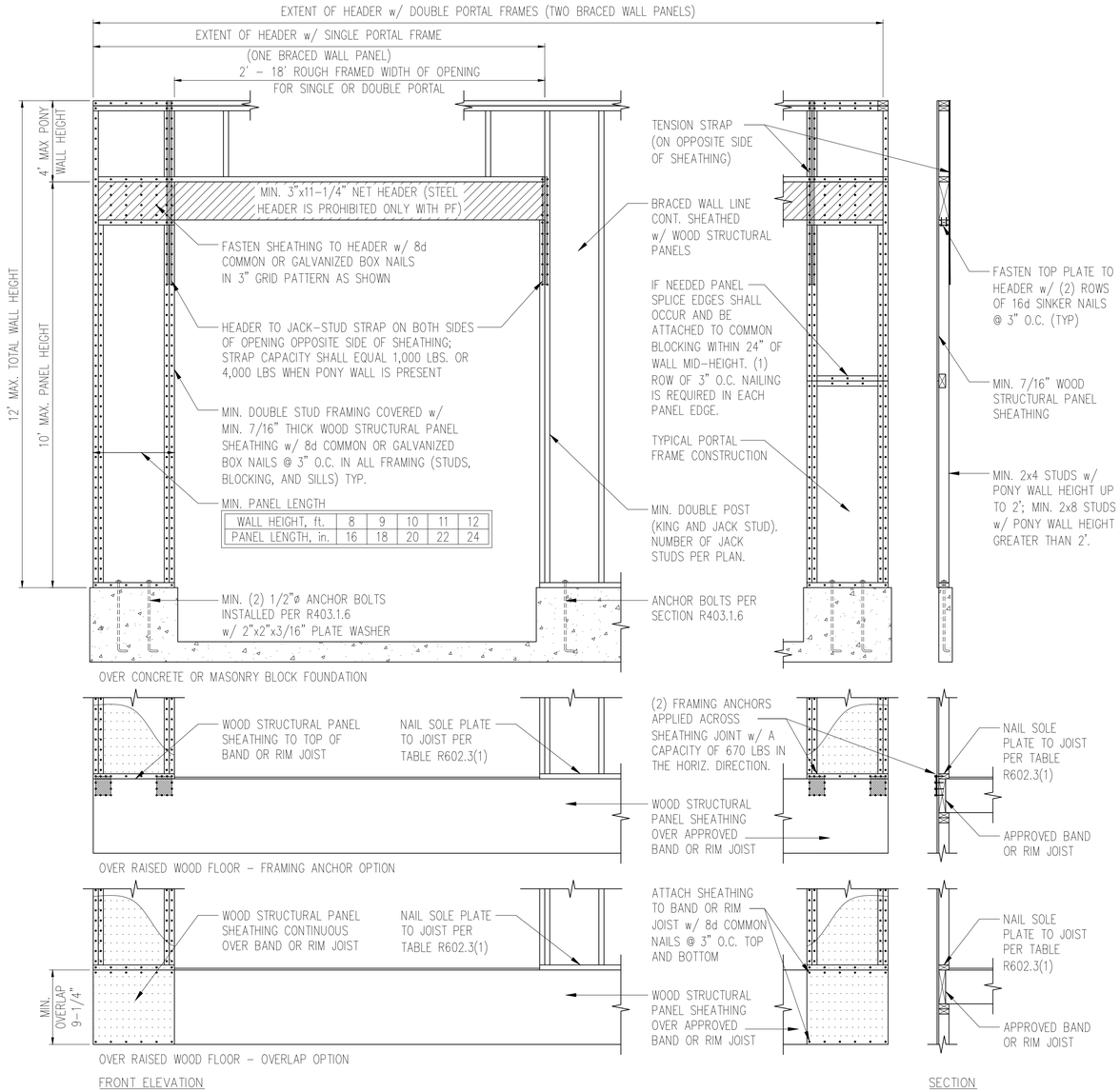

WALL HEIGHT, ft.	8	9	10	11	12
PANEL LENGTH, in.	16	18	20	22	24

1 D1f METHOD PF: PORTAL FRAME DETAIL

3/8" = 1'-0"

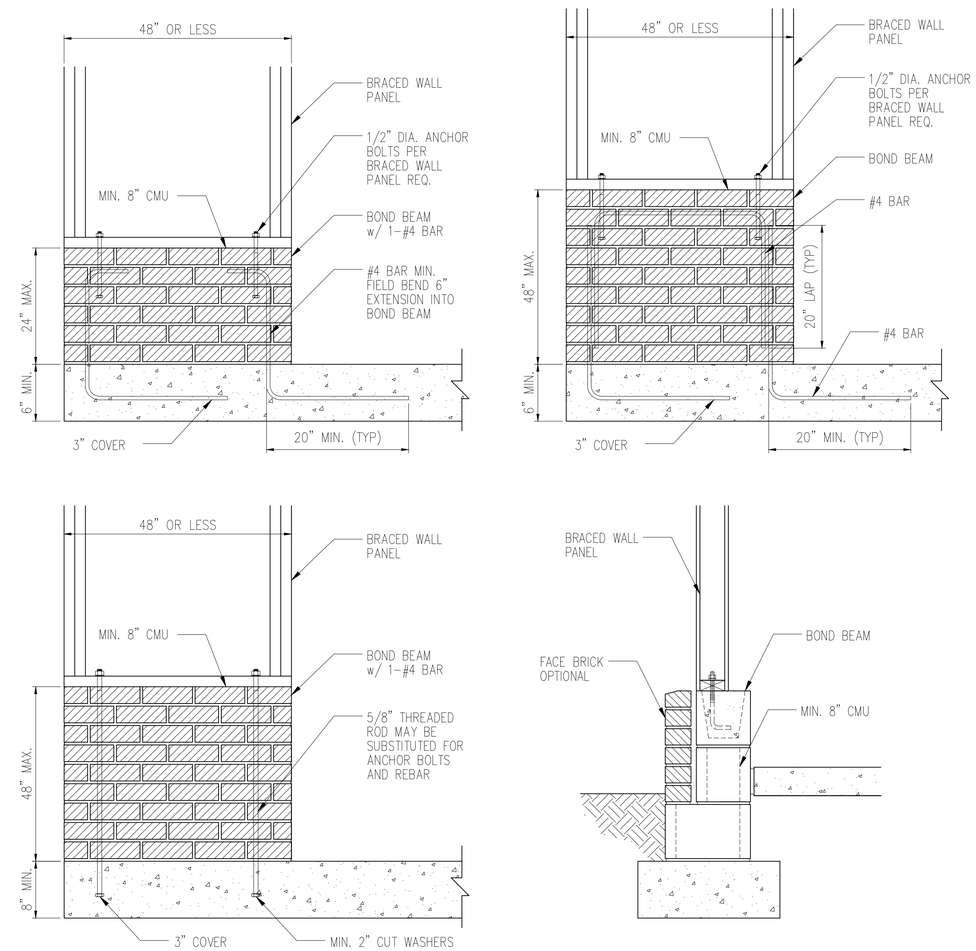

2 D1f MASONRY STEM WALLS SUPPORTING BRACED WALL PANELS

NTS

NOTE: GROUT BOND BEAMS AND ALL CELLS WHICH CONTAIN REBAR, THREADED RODS AND ANCHOR BOLTS

UES PROFESSIONAL SOLUTIONS 29, INC.
FORMERLY SUMMIT ENGINEERING, LABORATORY, & TESTING, INC.
10121 Pineville Distribution St
Pineville, NC 28134
Office: 704.504.1717
Fax: 704.504.1725
www.teamues.com

NORTH CAROLINA UES PROFESSIONAL SOLUTIONS 29, INC. No. F-1454 CERTIFICATE OF AUTHORIZATION

CLIENT:
DR Horton Carolina Division
8001 Arrowridge Blvd.
Charlotte, NC 28273

PROJECT:
Standard Details (OX-IS)
Framing Details

05.06.2024
NORTH CAROLINA PROFESSIONAL SEAL 020222 ENGINEER GEORGE W. SANFORD
STRUCTURAL ENGINEERS ONLY

DRAWING
DATE: 05/06/2024
SCALE: 22x34 1/4"=1'-0"
11x17 1/8"=1'-0"
PROJECT #: A21117.000666.000
DRAWN BY: MGC
CHECKED BY: GWS

ORIGINAL INFORMATION
PROJECT # DATE 1/31/2017

REFER TO COVER SHEET FOR A COMPLETE LIST OF REVISIONS

SHEET
D1f

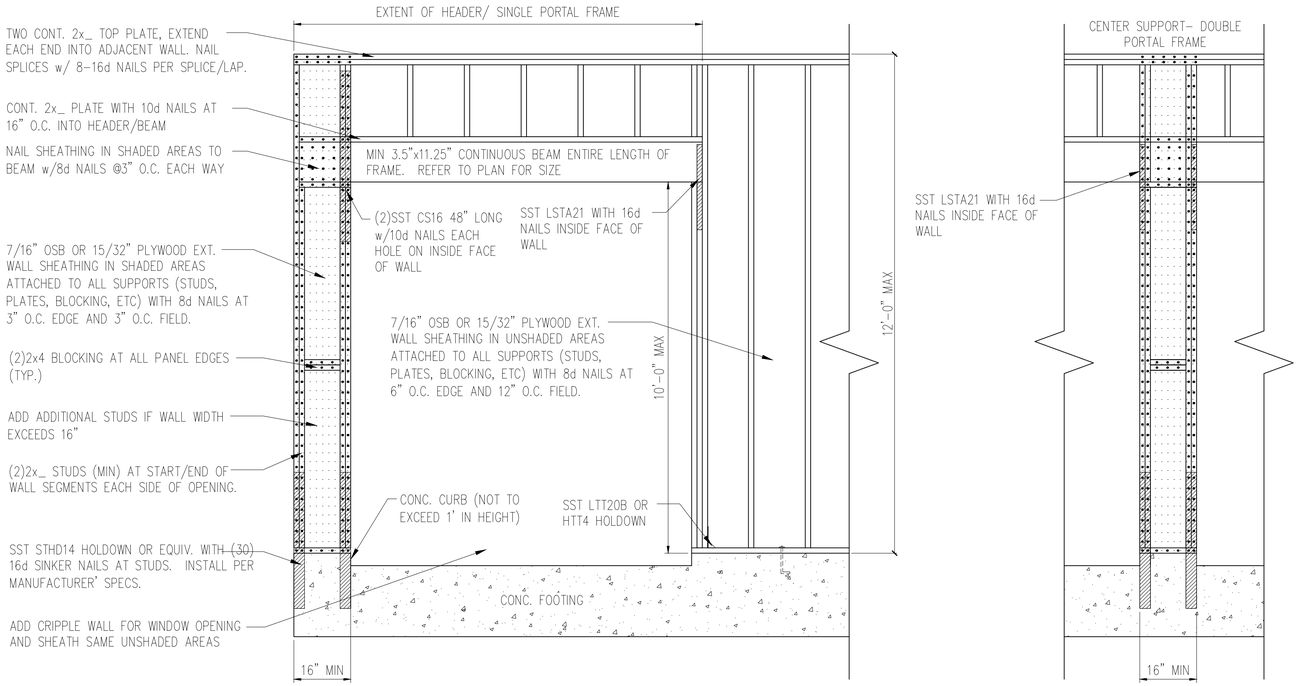

1 D2f METHOD PF: PORTAL FRAME DETAIL w/ HOLD-DOWNS

3/4" = 1'-0"

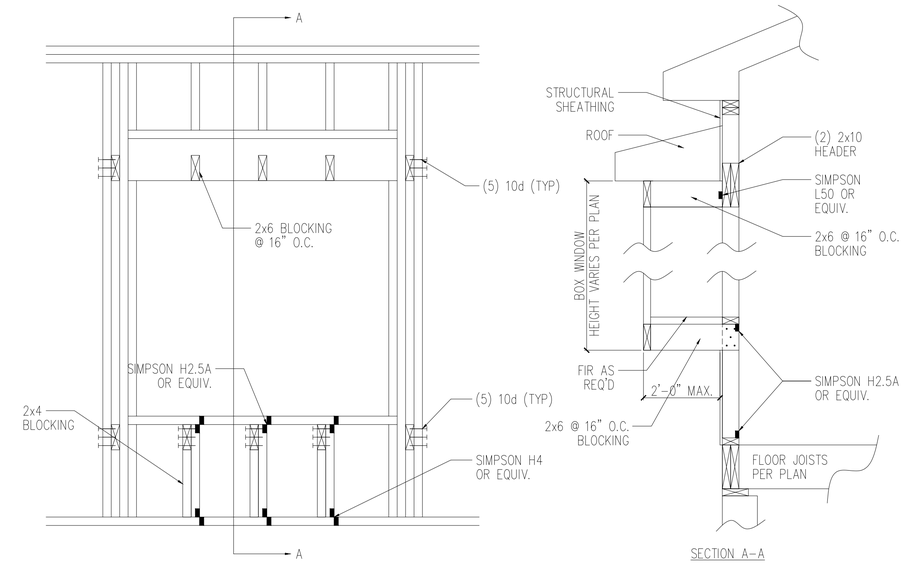

2 D2f BOX WINDOW DETAIL

N.T.S

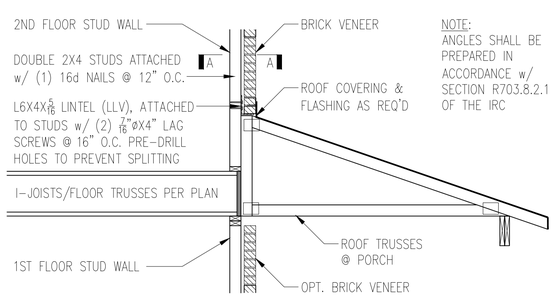

NOTE: ANGLES SHALL BE PREPARED IN ACCORDANCE w/ SECTION R703.8.2.1 OF THE IRC

TRUSSES PERPENDICULAR TO STUD WALL

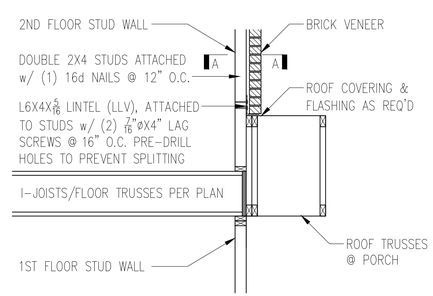

TRUSSES PARALLEL TO STUD WALL

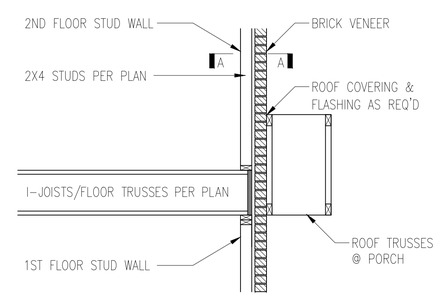

TRUSSES PARALLEL TO STUD WALL w/ CONTINUOUS BRICK VENEER

3 D2f BRICK SUPPORT ABOVE STORAGE/PORCH ROOF DETAIL

NTS

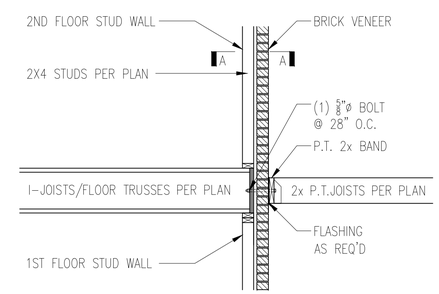

4 D2f BALCONY JOIST ATTACHMENT

NTS

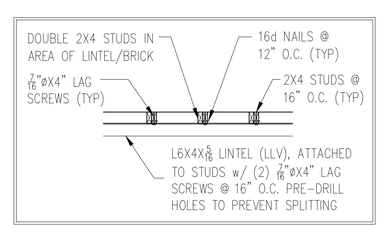

SECTION A-A

NTS

UES PROFESSIONAL SOLUTIONS 29, INC.
FORMERLY SUMMIT ENGINEERING, LABORATORY, & TESTING, INC.
10121 Pineville Distribution St
Pineville, NC 28134
Office: 704.504.1717
Fax: 704.504.1725
www.teamues.com

NORTH CAROLINA UES PROFESSIONAL SOLUTIONS 29, INC. No. F-1454 CERTIFICATE OF AUTHORIZATION

CLIENT:
DR Horton Carolina Division
8001 Arrowridge Blvd.
Charlotte, NC 28273

PROJECT:
Standard Details (QX-IS)
Framing Details

05.06.2024
NORTH CAROLINA PROFESSIONAL SEAL 020222 ENGINEER GEORGE W. SANFORD

STRUCTURAL MEMBERS ONLY

DRAWING
DATE: 05/06/2024
SCALE: 22x34 1/4"=1'-0"
11x17 1/8"=1'-0"
PROJECT #: A21017.00066.000
DRAWN BY: MGC
CHECKED BY: GWS

ORIGINAL INFORMATION
PROJECT # DATE 1/31/2017

REFER TO COVER SHEET FOR A COMPLETE LIST OF REVISIONS

SHEET
D2f

MINIMUM FASTENING REQUIREMENTS FOR TOP- AND SIDE-LOADED MEMBERS

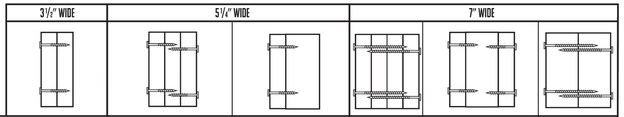

FASTENER TYPE	LVL DEPTH	3½" WIDE: 2-Ply 1¾"	5¼" WIDE: 3-Ply 1¾"	5¼" WIDE: 1¾" + 3½"	7" WIDE: 4-Ply 1¾"	7" WIDE: 2-Ply 1¾" + 3½"	7" WIDE: 2-Ply 3½"
10d (0.128" x 3") Nails	7¼"≤d<14"	3 rows @ 12" o.c.	3 rows @ 12" o.c. **(ES)**	3 rows @ 12" o.c.	-	3 rows @ 12" o.c. **(ES)**	-
	d≥14"	4 rows @ 12" o.c.	4 rows @ 12" o.c. **(ES)**	4 rows @ 12" o.c.	-	4 rows @ 12" o.c. **(ES)**	-
16d (0.162" x 3½") Nails	7¼"≤d<14"	2 rows @ 12" o.c.	2 rows @ 12" o.c. **(ES)**	2 rows @ 12" o.c.	-	2 rows @ 12" o.c. **(ES)**	-
	d≥14"	3 rows @ 12" o.c.	3 rows @ 12" o.c. **(ES)**	3 rows @ 12" o.c.	-	3 rows @ 12" o.c. **(ES)**	-
½" Through Bolts	d≥7¼"	2 rows @ 24" o.c.	2 rows @ 24" o.c.		2 rows @ 24" o.c.		
SDS ¼" x 3½", WS35, 3⅜" TrussLok	d≥7¼"	2 rows @ 24" o.c.	2 rows @ 24" o.c. **(ES)**	2 rows @ 24" o.c.	-	2 rows @ 24" o.c. **(ES)**	-
SDS ¼" x 6", WS6	d≥7¼"	-	-		2 rows @ 24" o.c. **(ES)**		
5" TrussLok	d≥7¼"	-	2 rows @ 24" o.c.		-		
6¾" TrussLok	d≥7¼"	-	-		2 rows @ 24" o.c.		

NOTES:

1. All fasteners must meet the minimum requirements in the table above. Side-loaded multiple-ply members must meet the minimum fastening and side-loading capacity requirements given on page 48.
2. Minimum fastening requirements for depths less than 7¼" require special consideration. Please contact your technical representative.
3. Three general rules for staggering or offsetting for a certain fastener schedule:
   (1) if staggering or offsetting is not referenced, then none is required;
   (2) if staggering is referenced, then fasteners installed in adjacent rows on the front side are to be staggered up to one-half the o.c. spacing, but maintaining the fastener clearances above; and
   (3) if "**ES**" is referenced, then the fastener schedule must be repeated on each side, with the fasteners on the back side offset up to one-half the o.c. spacing of the front side (whether or not it is staggered).

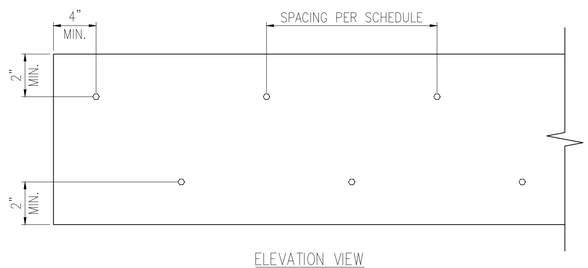

ELEVATION VIEW

1 D3f MULTI-PLY BEAM CONNECTION DETAIL
N.T.S

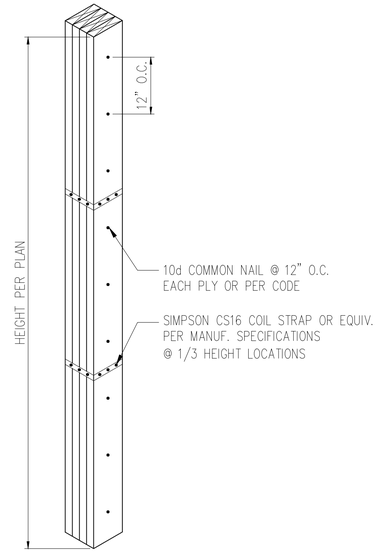

2 D3f MULTI-PLY STUD CONNECTION DETAIL
N.T.S
4+ PLIES

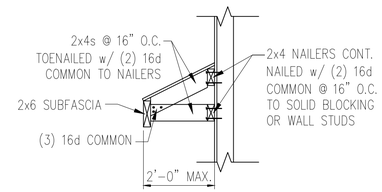

5 D3f GABLE ROOF RETURN
N.T.S.

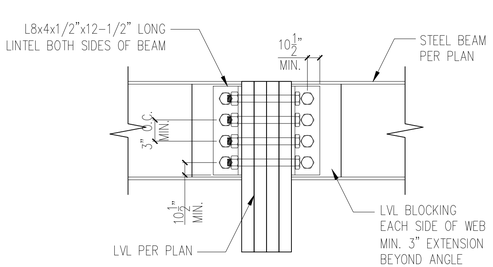

SECTION VIEW

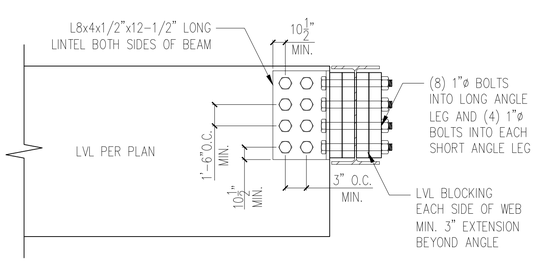

ELEVATION VIEW

3 D3f LVL TO STEEL DETAIL
N.T.S

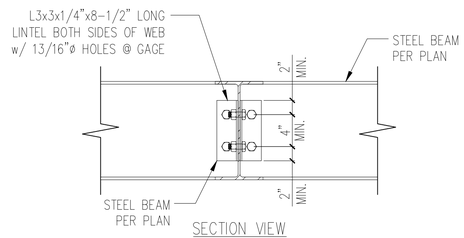

SECTION VIEW

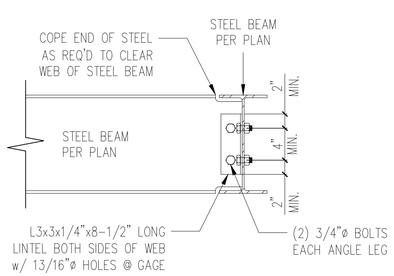

ELEVATION VIEW

4 D3f STEEL TO STEEL DETAIL
N.T.S

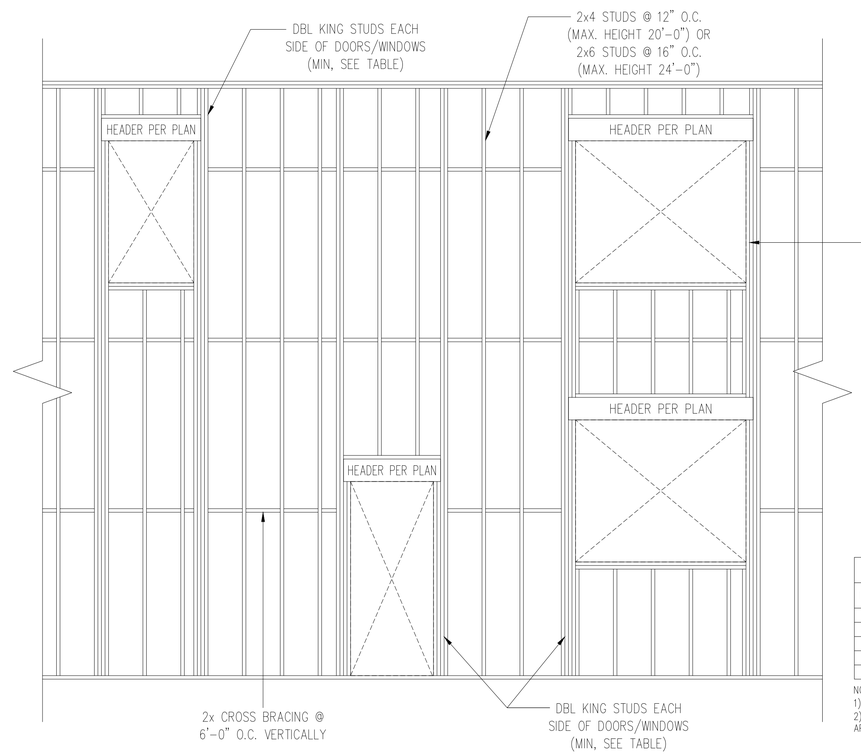

KING STUDS AT EACH END OF HEADERS	
MAX. HEADER SPAN	STUDS (MIN.)
3'-0"	1
4'-0"	2
8'-0"	3
12'-0"	5
16'-0"	6

NOTES:
1) FOR UP TO 130 MPH, EXPOSURE B
2) KING STUD REQUIREMENTS DO NOT APPLY TO PORTAL FRAMED OPENINGS

6 D3f TYP. BALLOON FRAMING DETAIL
N.T.S

UES PROFESSIONAL SOLUTIONS 29, INC.
FORMERLY SUMMIT ENGINEERING, LABORATORY, & TESTING, INC.
10121 Pineville Distribution St
Pineville, NC 28134
Office: 704.504.1717
Fax: 704.504.1725
www.teamues.com

NORTH CAROLINA CERTIFICATE OF AUTHORIZATION
UES PROFESSIONAL SOLUTIONS 29, INC.
No. F-1454

CLIENT:
DR Horton Carolina Division
8001 Arrowridge Blvd.
Charlotte, NC 28273

PROJECT:
Standard Details (OX-IS)
Framing Details

05.06.2024
NORTH CAROLINA PROFESSIONAL SEAL 020222 ENGINEER GEORGE W. SANFORD
STRUCTURAL MEMBERS ONLY

DRAWING
DATE: 05/06/2024
SCALE: 22x34 1/4"=1'-0"
11x17 1/8"=1'-0"
PROJECT #: A21117.00066.000
DRAWN BY: MGC
CHECKED BY: GWS

ORIGINAL INFORMATION
PROJECT # DATE
1/31/2017

REFER TO COVER SHEET FOR A COMPLETE LIST OF REVISIONS

SHEET
D3f

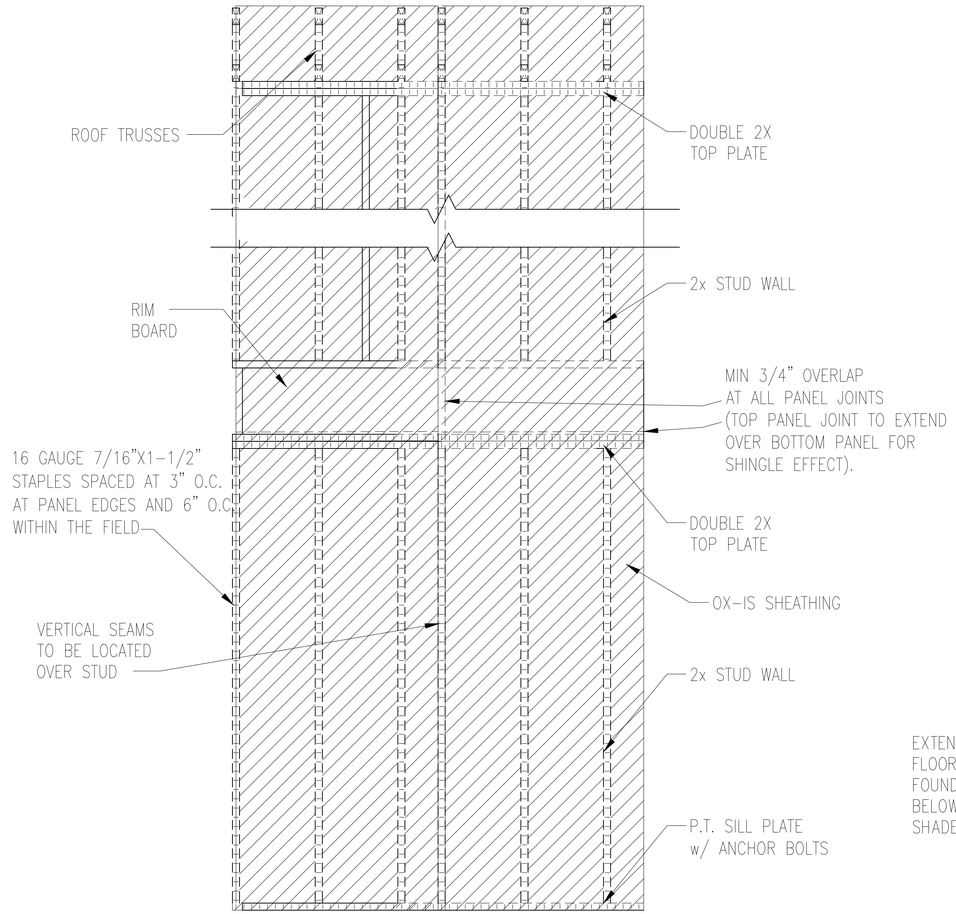

1 D4f TYP. WALL BRACING

NTS

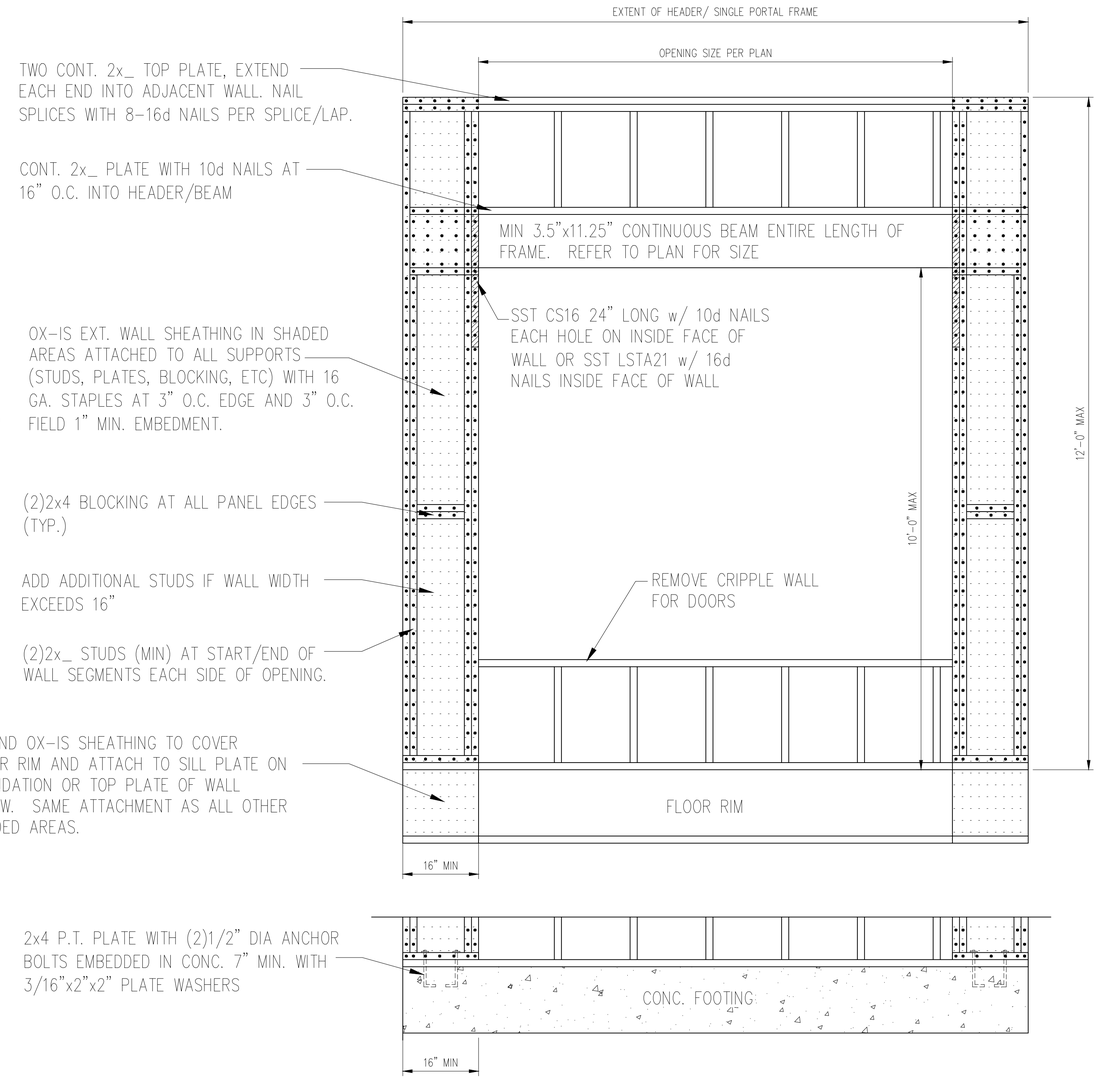

3 D4f METHOD PF: PORTAL FRAME DETAIL

NTS

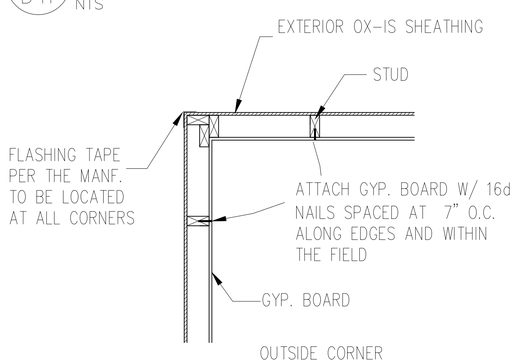

2 D4f TYP. EXTERIOR CORNER ATTACHMENT

NTS

NOTES:
- OX-IS MAY BE INSTALLED IN LIEU OF OSB FOR CS-WSP AND CS-PF BRACING METHODS SHOWN ON THE BRACING PLAN. BRACED WALLS SHALL BE INSTALLED PER LENGTHS SHOWN ON THE SEALED PLANS.
- 16 GA. STAPLES MAY BE SUBSTITUTED WITH 0.113-INCH DIAMETER ($\frac{3}{8}$" HEAD OR 2" CAP) NAILS WITH MINIMUM 1" EMBEDMENT.
- STAPLES MAY RUN PARALLEL WITH WOOD GRAIN OF FRAMING STUDS AT SHEATHING SEAMS.
- WHERE 3/4" OVERLAP IS NOT INSTALLED, CONTRACTOR MAY COVER SEAM WITH 5" BUTYL FLASHING TAPE.
- FLASH WINDOWS AND DOORS PER MANF.
- THE DETAILS ABOVE ARE LIMITED TO 130 MPH WIND ZONES.

UES
UES PROFESSIONAL SOLUTIONS 29, INC.
FORMERLY SUMMIT ENGINEERING, LABORATORY, & TESTING, INC.
10121 Pineville Distribution St
Pineville, NC 28134
Office: 704.504.1717
Fax: 704.504.1725
www.teamues.com

NORTH CAROLINA UES PROFESSIONAL SOLUTIONS 29, INC. No. F-1454 CERTIFICATE OF AUTHORIZATION

CLIENT:
DR Horton Carolina Division
8001 Arrowridge Blvd.
Charlotte, NC 28273

PROJECT:
Standard Details (OX-IS)
Framing Details

05.06.2024

NORTH CAROLINA PROFESSIONAL SEAL 020222 ENGINEER GEORGE W. SAMFORD

STRUCTURAL MEMBERS ONLY

DRAWING
DATE: 05/06/2024
SCALE: 22x34 1/4"=1'-0"
11x17 1/8"=1'-0"
PROJECT #: A20117.00066.000
DRAWN BY: MGC
CHECKED BY: GWS

ORIGINAL INFORMATION
PROJECT # DATE 1/31/2017

REFER TO COVER SHEET FOR A COMPLETE LIST OF REVISIONS

SHEET
D4f

General Notes: ** CUTTING OR DRILLING OF COMPONENTS SHOULD NOT BE DONE WITHOUT CONTACTING COMPONENT SUPPLIER FIRST. CUSTOMER TAKES FULL RESPONSIBILITY FOR COMPONENTS IF CUT BEFORE AUTHORIZATION.

** LVL AND JOISTS MUST BE FULLY CONNECTED TOGETHER PRIOR TO ADDING ANY LOADS.

Revisions	
00/00/00	Name
00/00/00	Name
00/00/00	Name
00/00/00	Name
00/00/00	Name

Products

Net Qty	Plies	Product	Length	PlotID
8	1	14" PJI-40	34' 0"	J34
2	1	14" PJI-40	24' 0"	J24
2	1	14" PJI-40	20' 0"	J20
12	1	14" PJI-40	18' 0"	J18
9	1	14" PJI-40	16' 0"	J16
4	1	14" PJI-40	4' 0"	J4
2	2	2.1 RigidLam SP LVL 1-3/4 x 9-1/4	8' 0"	DB3-2
2	2	2.1 RigidLam SP LVL 1-3/4 x 9-1/4	6' 0"	DB4-2
2	2	2.1 RigidLam SP LVL 1-3/4 x 14	6' 0"	FB1-2
2	2	2.1 RigidLam SP LVL 1-3/4 x 16	20' 0"	DB2-2
15	1	1 1/8" x 14" APA Rim Board	12' 0"	RIM1

Accessories

Net Qty	Plies	Product	Length	PlotID
37	1	3/4" 4x8 OSB		

Connector Summary

Web Stiff	Backer Blocks	Product	Manuf	Qty	PlotID
No	No	IUS2.56/14	Simpson	1	H1
No	No	IUS2.56/14	Simpson	4	H2

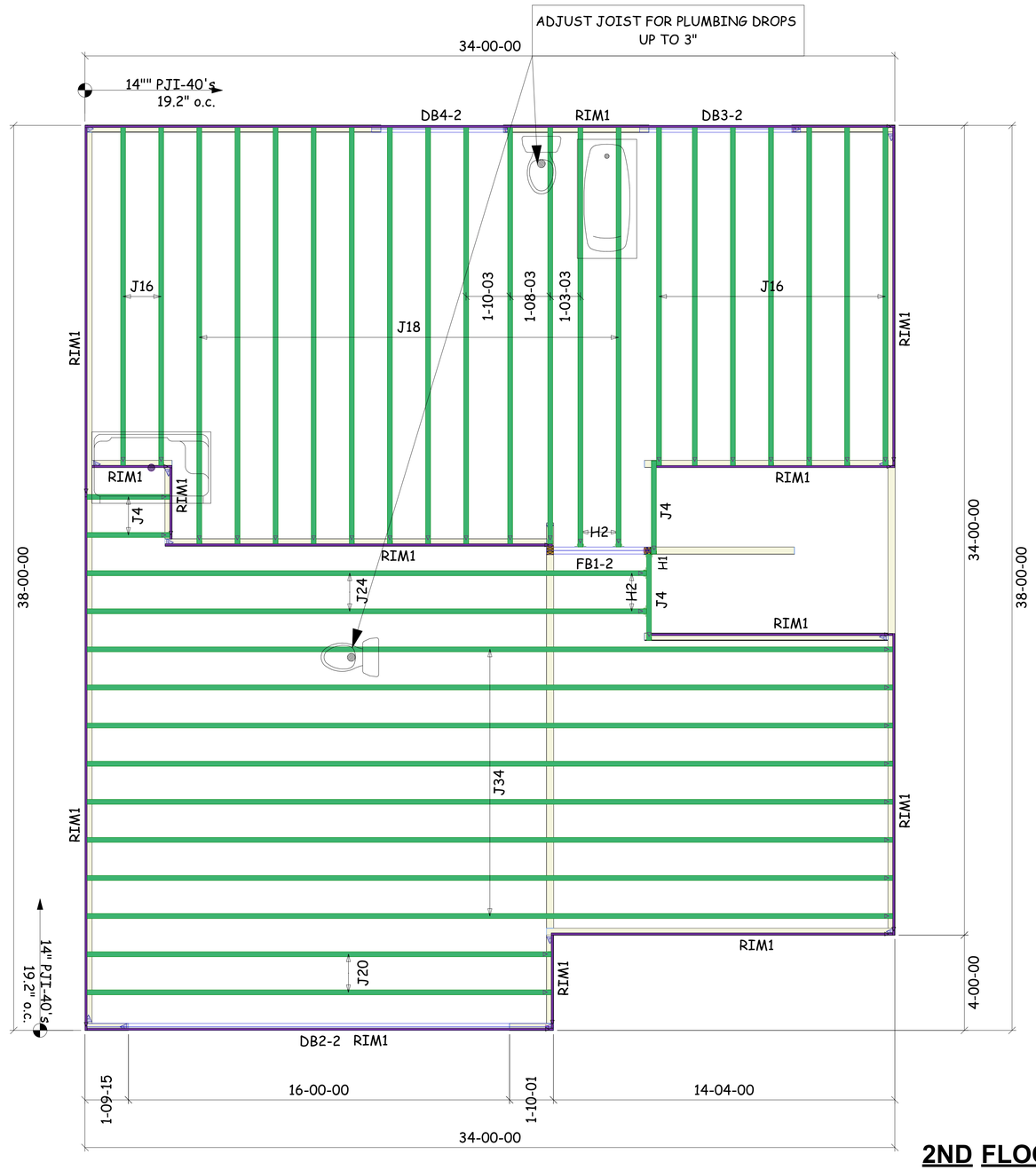

2ND FLOOR LAYOUT

** FRAMER MUST REFER TO PLANS WHILE SETTING COMPONENTS.

This is an I-Joist Placement Plan Only. All designs of I-Joist follow the IBC/IRC Code Requirements along with Manufacturer's guidelines. This is NOT an engineered placement plan. This placement plan is created from plans provided by the customer using Manufactures guidelines. It is the responsibility of the EOR, or builder to review and approve all bearing conditions, connections, spans, loading, product usage, and quantities. Do not notch or drill holes in beams or flanges on joists without prior approval from the manufacturing Representative unless following hole guidlines in the installation guide for product. Failure to follow guidelines will be responsibility for doing so and NO Back charge will be accepted.

** DIMENSIONS ARE READ AS: FOOT-INCH-SIXTEENTH.

** DAMAGED FLOOR JOISTS SHOULD NOT BE INSTALLED UNLESS APPROVED BY COMPONENT PLANT.

CARTER Lumber

D.R HORTON
25 Cross Creek
Belhaven E
FLOOR JOIST LAYOUT

Scale: **3/8" = 1'-0"**
Date: **10/01/25**
Designer: **DW**
Project #: **25090187**
Sheet Number:
1 / 1

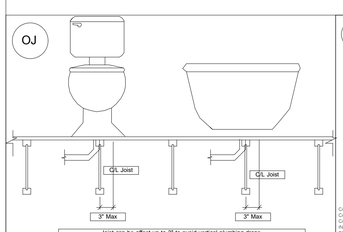

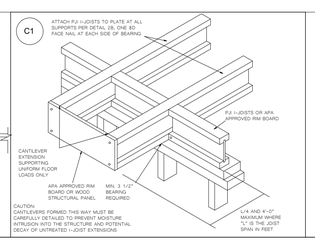

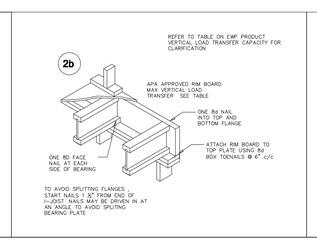

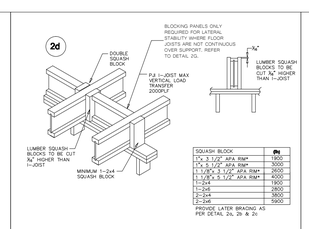

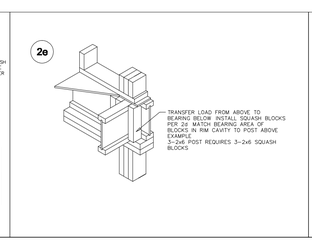

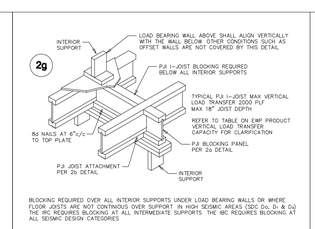

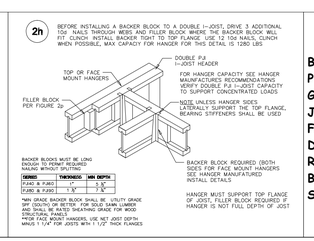

LABEL LEGEND

BBO = Beam by Others
PBO = Post by Others
GBO = Girder by Others
J = I-Joist
FB = Flush Beam
DB = Dropped Beam
RB = Roof Beam
BP = Blocking Panels
SB = Squash Blocks

** PLUMBING DROPS NOTED ARE IN APPROXIMATE LOCATIONS PER PLAN. BUILDER MUST VERY LOCATIONS BEFORE SETTING JOISTS.

** ALL POINT LOADS FROM ABOVE MUST BE TRANSFERRED TO BEARING FROM UNDER SIDE OF SHEATHING.

** REFER TO INSTALLATION GUIDE FOR PLY TO PLY CONNECTIONS.