North Carolina Onsite Wastewater Contractor Inspector Certification Board
Authorized Onsite Wastewater Evaluator Permit Option for Non-Engineered Systems
Notice of Intent (NOI) to Construct

X New ____ Expansion ____ Repair ____ Relocation ____ Relocation of Repair Area

Owner or Legal Representative Information:
Name: Mattamy Homes LLC
Mailing address: 11000 Regency Parkway City: Cary State: NC Zip: 27518
Phone: 919-233-3886 Email: Raleighplanreview@mattamyloop.com

Authorized Onsite Wastewater Evaluator Information:
Name: David E. Meyer Certification #: 10037E
Mailing address: 414 Laurel Ridge Drive City: Raleigh State: NC Zip: 27612
Phone: 919-210-6547 Email: protocolsanitarians@yahoo.com

Site Location Information:
Site address: 105 Caravella Drive (Lot 4)
Tax parcel identification number or subdivision lot, block number of property: 0645-07-0988
County: Harnett

System Information:
Wastewater System Type: IIb
Daily Design Flow: 480 gpd
Saprolite System: ____ Yes X No Subsurface Operator Required: ____ Yes X No
Water Supply Type: ____ Private Well X Public Water Supply ____ Spring ____ Other: ____

Facility Type:
X Residential 4 # Bedrooms 8 Maximum # of Occupants
____ Business Type of Business and Basis for Flow: ____
____ Public Assembly Type of Public Assembly and Basis for Flow: ____

Required Attachments:
X Plat or Site Plan
X Evaluation of Soil and Site Features by Licensed Soil Scientist

Attest: On this the 19th day of Sept., 2025 by signature below I hereby attest that the information required to be included with this NOI to Construct is accurate and complete to the best of my knowledge. Furthermore, I hereby attest that I have adhered to the laws and rules governing onsite wastewater systems in the state of North Carolina.
This NOI shall expire on 19th day of Sept., 2026.

Signature of Authorized Onsite Wastewater Evaluator: [signature]

Signature of Owner or Legal Representative: Drew Brody

Disclosure: The owner may apply for a building permit for the project upon submitting a complete NOI to Construct and the fee required (if any) to the local health department. An onsite wastewater system authorized by an authorized onsite wastewater evaluator shall be transferable to a new owner with the consent of the authorized onsite wastewater evaluator.

Local Health Department Receipt Acknowledgement:
Signature of Local Health Department Representative: ____ Date: ____

Protocol Sampling Service, Inc.
"Experts in Environmental Compliance"

4114 Laurel Ridge Drive
Raleigh, North Carolina 27612

(919) 210-6547

Protocolsampling@yahoo.com
Environmentalservicesnc.com

September 19, 2025

Mr. Drew Brody, Senior Operations Coordinator
Mattamy Homes LLC
11000 Regency Parkway
Cary, NC 27518
Phone: 919-233-3886
Email: raleighplanreview@mattamycorp.com

RE: G.S. 130A-336.2 AOWE
Lot 4, Clarabella Subdivision (0.58 Acres)
105 Clarabella Drive
PIN #: 0645-07-0988
Fuquay Varina, Harnett County, North Carolina 27526

Dear Mr. Brody:

Per your request, I evaluated the above referenced lot for its suitability to accommodate an on-site wastewater disposal system (i.e., septic tank system) to serve a 4-bedroom home. The soil evaluation was performed in accordance with the "Laws and Rules for Sewage Treatment, and Disposal Systems, Article 11, Chapter 130A of NCGS 15A NCAC 18A **.**1900 et seq." (i.e., 15A NCAC 18E).

Your major request is to obtain the Improvement Permit/Construction Authorization portions of the permitting process from the Harnett County Health Department. You wish to expedite the permitting process by requesting this Licensed Soil Scientist evaluation and report submitted pursuant to G.S. 130A-336.2 AOWE.

The soils consist of loamy sands and sandy clay loam over sandy clay deeper in the profiles. Redoximorphic activity was observed with soil wetness mottle indicators of gray colors of chroma 2 or less (Munsell Chart) at 34-40" in both the initial and repair system areas. It was determined that is a sufficient amount of Suitable Group III soils available in the study area for the installation of the initial and repair gravity-fed Accepted systems to serve a daily flow of 480-gpd at a Long-Term Acceptance Rate (L.T.A.R.) of 0.45 gpd/ft^2 in the initial system area and 0.35 gpd/ft^2 in the repair system area. Refer to the soil evaluation profile data sheet attached for more detailed soils information.

The initial system will need (5) 54' x 3' chamber (12") technology with 25% reduction installed at 18" below grade (maximum), and the repair system will need (6) 57' x 3' chamber (12") technology with 25% reduction installed at 18" below grade. Soil cover must be maintained by seeding and straw thatching. Divert all downspouts and surface water run-off around the system. Refer to the attached Plans and Specification sheet for more detailed information. A septic tank diagram and chamber product information with the state approved summary is attached.

In closing, this report, site plan, and septic system design with attachments are being submitted to obtain the Notice of Intent to Construct (NOI) upon review by the Harnett County Health Department's Environmental Health Section. If further information is needed, please let me know as soon as possible.

This LSS evaluation is being submitted pursuant to and meets the requirements of G.S. 130A-336.2 AOWE.

Please call me at (919) 210-6547 if you have any questions or need further assistance.

David E. Meyer, N.C.L.S.S.
Soil Scientist/President

PLANS AND SPECIFICATIONS FOR INSTALLATION AND MAINTENANCE FOR:

Mattamy Homes PIN 0645-07-9988
Lot 4
105 Clarabella Drive
Fuquay Varina, Harnett County, NC 27526

This Licensed Soil Scientist Evaluation is being submitted pursuant to and meeting the requirements of **G.S. 130A-336.2 AOWE.**

Soil/site evaluation and on-site wastewater system layout/design services were performed on the above referenced parcel to serve a **4-bedroom home** with a projected daily wastewater flow of 480 gallons. Evaluations were conducted in accordance with "N.C. Laws and Rules for Sewage Treatment, and Disposal Systems, Article 11, Chapter 130A of NCGS 15A NCAC 18A.1900 et seq." (i.e., 15A NCAC 18E).

A. Septic Tank Size
1000 gallons NC state approved (STB 103 or equiv.)
Must have effluent filter in septic tank
Septic contractor must inspect before installing.

B. Nitrification Trenches: Initial System
Use Innovative Wastewater Approval No: IWWS-1993-2-R17 12" Quick 4 Plus Standard Chamber System.
(5) x 54' x 3' trenches on 9' center contours
Install at 18" (max.).
Install in dry weather only.
Install 30" interceptor drain along shared property line with Lot 5 (70' long).
No construction traffic shall be on the system area.
A 6" soil cover must be placed and maintained on the field by diverting surface water around area. Proper seeding and straw thatching are required.

C. Distribution
Use serial distribution using end cap side entrance ports with splash plates.

D. Take special care for underground utilities and water lines. Water lines must clear the initial and repair area 10' minimum. Run the water lines and any other utilities up the driveway.

E. Maintenance
Keep system area protected and mowed.

Septic tank should be pumped about every 3-5 years and the effluent filter cleaned at that time.
A garbage disposal may require more frequent pumping out of the septic tank.
No used oils are to be disposed of in the septic tank. No chemical additives are to be discharged to the septic tank.

F. L.T.A.R.
0.45 gpd/ft^2 for initial and 0.35 gpd/ft^2 repair area.

G. Repair Area
Use Innovative Wastewater Approval No: IWWS-1993-2-R17 12" Quick 4 Plus Standard Chamber System.
(6) x 57' x 3' trenches on 9' center contours
Install at 18" (max.).
Install in dry weather only.
No construction traffic shall be on the system area.
A 6" soil cover must be placed and maintained on the field by diverting surface water around area. Proper seeding and straw thatching are required.

H. Other References
See site plan for system layout. See plat map for soil boring locations. See report and soil profile sheets. See Infiltrator Product sheet, system sizing sheet with trench detail, and state approval summary.

I. **Contact Protocol Sampling Service, Inc. to schedule pre-construction meeting and inspection of installation.**

David E. Meyer, N.C.L.S.S.
Soil Scientist/President

LICENSED SOIL SCIENTIST
DAVID E. MEYER
STATE OF NORTH CAROLINA
9/19/2025
1044

LEGEND

○ – SOIL BORINGS

40" – SOIL DEPTH (INCHES)

– INITIAL SYSTEM LINES (5x54'L x 18" DEEP)

– REPAIR SYSTEM LINES (6x57'L x 18" MAX. DEEP MAX.)

SCALE 1" = 40'

Protocol Sampling Service, Inc.
4114 Laurel Ridge Dr
Raleigh, NC 27612

Sheet 1 of 1
PROPERTY ID #: 0645-17-1662
COUNTY: Harnett

SOIL/SITE EVALUATION
***for* ON-SITE WASTEWATER SYSTEM**
(Complete all fields in full)

OWNER: Mathany Homes
ADDRESS: 1742 Oakridge Duncan Road Fuquay Varina NC 27526
APPLICATION DATE
DATE EVALUATED: 12-23-25
PROPOSED FACILITY: 4 Bedroom
PROPOSED DESIGN FLOW (.1949): 480
PROPERTY SIZE: 41.27
LOCATION OF SITE: Lot 4 Camellia
PROPERTY RECORDED: Yes
WATER SUPPLY: ☐ Private ☑ Public ☐ Well ☐ Spring ☐ Other
EVALUATION METHOD: ☑ Auger Boring ☐ Pit ☐ Cut
TYPE OF WASTEWATER: ☑ Sewage ☐ Industrial Process ☐ Mixed

PROFILE #	.1940 LANDSCAPE POSITION/ SLOPE %	HORIZON DEPTH (IN.)	SOIL MORPHOLOGY (.1941) .1941 STRUCTURE/ TEXTURE		.1941 CONSISTENCE/ MINERALOGY		OTHER PROFILE FACTORS .1942 SOIL WETNESS/ COLOR	.1943 SOIL DEPTH	.1956 SAPRO CLASS	.1944 RESTR HORIZ	PROFILE CLASS & LTAR
1	Lot 4 T Top Repair	0-8"	GL	LS	FR	NS NP	34" 10YR6/2	48"	—	—	0.3-0.6
		8-15"	SBK	SCL	FR-FI	SS NP					
		15-36"	SBK	SL	FR	SS NP					
		36-48"	SBK	SCL/SL	FR-FI	SS NP					
2	Lot 4 T Bottom Initial	0-18"	GR/SCL	LS	FR	NS NP	40" 10YR6/2	48"	—	—	0.3-0.6
		18-43"	SBK	SCL	FI	SS NP					
		43-48"	SBK	SCL/SC	FI	SS SP					
3	Lot 5 T Top Initial	0-28"	GR/SBK	LS	FR	NS NP	36" 10YR6/2	48"			0.3-0.6
		28-36"	SBK	SCL	FR-FI	SS NP					
		36-48"	SBK	SCL/SC	FI	SS SP					
4	Lot 5 T Bottom Repair	0-18"	SBK	LS	FR	NS NP	30" 10YR6/2	48"			0.1-0.9
		18-29"	SBK	CSL	FR	NS NP					
		29-48"	SBK	SC	FI	SS SP					

DESCRIPTION	INITIAL SYSTEM (Lot 4)	INITIAL SYSTEM (Lot 5)	REPAIR SYSTEM (Lot 4)	REPAIR SYSTEM (Lot 5)
Available Space (.1945)	Yes		Yes	
System Type(s)	Accepted 75% red		Accepted 25% red	
Site LTAR	0.45	267' LTAR @ 18" / 0.35	0.45	0.35

OTHER FACTORS (.1946):
SITE CLASSIFICATION (.1948): 6
EVALUATED BY: [illegible]
OTHER(S) PRESENT:

COMMENTS:

STATE APPROVAL SUMMARY

Excerpt from AWWS 2005-01-R5. Accepted approval with 4.0 ft²/lf for the Quick4 Plus Standard chamber model and sizing only. Allows for substitution of any conventional permits.

IX. Responsibilities and Permitting

A. The local health department shall permit these accepted system in an equivalent manner as a conventional system, when the requirements of 15A NCAC 18A .1900 et. Seq., laws, and conditions of this accepted system approval are met.

B. When use of one or more of these accepted systems is requested in the application for a Construction Authorization, the local health department shall include a design for the designated accepted system(s) in accordance with the approved siting, sizing, and design criteria on the Construction Authorization.

C. When a permit or authorization is issued for a conventional system, the permit or authorization shall contain a statement that indicates that an accepted system may also be used. These accepted systems may be installed without permit/authorization modification, prior approval of the health department, or separate sign-off, if the accepted system can be placed in the permitted/authorized trench footprint and the installation is in accordance with the accepted system approval, without unauthorized product alteration.

D. When substitution with one of these accepted systems for a conventional system or another accepted system is made, permit modification, prior approval of the health department or separate owner sign-off is not required as long as no changes are necessary in the location of each nitrification line (except reduction in line length and/or number as allowed for in this approval), trench depth, or effluent distribution method.

E. Notwithstanding paragraphs C and D above, when a substitution in system type compared to a previously permitted or authorized system type or types shall result in a change in the location of any nitrification line (including any increase in line length), trench depth, or effluent distribution method, prior approval by the local health department is required before system installation. The local health department shall modify the permit/authorization upon a finding that all provisions of this approval and all other applicable rules shall be met.

F. The type of system installed shall be indicated on the Operation Permit, including designation of the manufacturer and model or unique code.

CHAMBER APPROVAL SUMMARY

Model	Accepted	Innovative
Quick4 Plus Standard	●[1]	●[2]
Quick4 Plus Standard LP		●[3]
Quick4 High Capacity		●[2]
Quick4 Equalizer 36		●[2]
Quick4 Equalizer 24		●[2]

NOTES:
1. AWWS 2005-01-R5
2. IWWS-1993-2-R17
3. IWWS-2010-1-R5
4. Wastewater system approval revision numbers subject to change.

INFILTRATOR WATER TECHNOLOGIES

QUICK4 STANDARD CHAMBER
SERIAL DISTRIBUTION TYPICAL DETAIL
SECTION VIEW

(NOT TO SCALE)

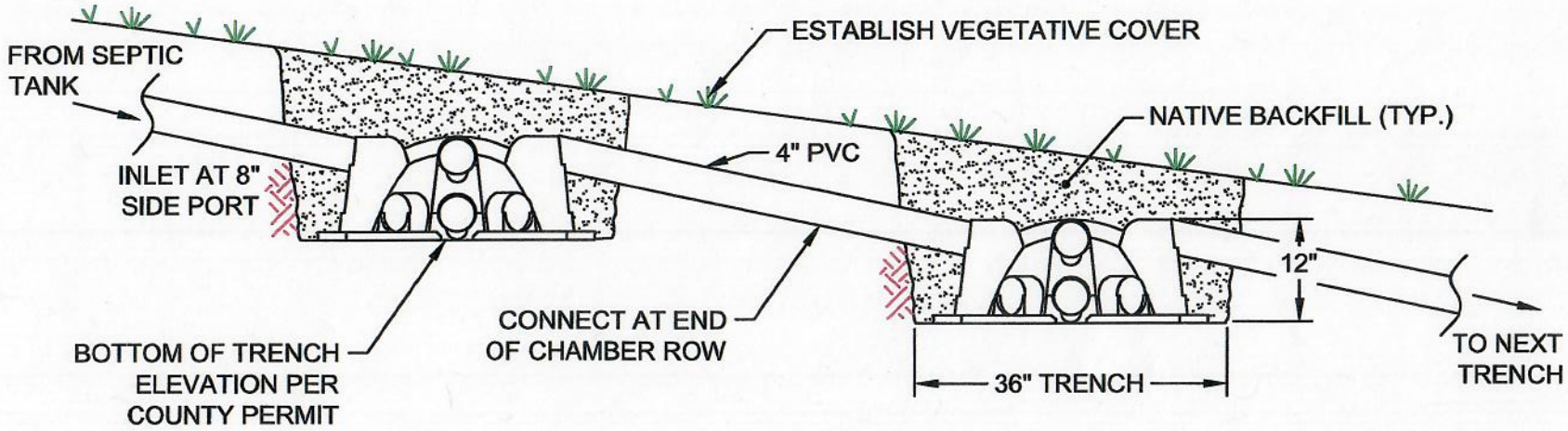

*NUMBER OF ROWS DETERMINED BY DESIGN AND CENTER TO CENTER SPACING PER CODE.

INFILTRATOR water technologies

INFILTRATOR WATER TECHNOLOGIES
4 Business Park Rd. Old Saybrook, CT 06475
(800) 221-4436

QUICK4 STANDARD CHAMBER
SERIAL DISTRIBUTION TYPICAL DETAIL
SECTION VIEW

Drawn by: EMB		Date: 05/21/2015
Scale: NOT TO SCALE	Checked by: DFH	Sheet: 1 of 1

INFILTRATOR WATER TECHNOLOGIES
QUICK4 STANDARD CHAMBER
PRODUCT SPECIFICATIONS
(NOT TO SCALE)

TOP VIEW

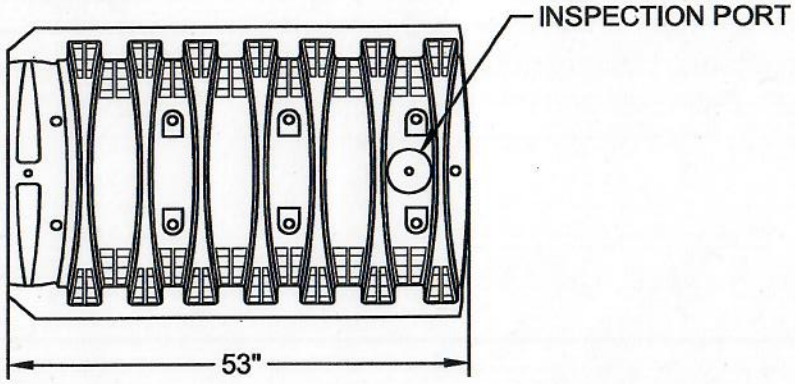

SIDE VIEW

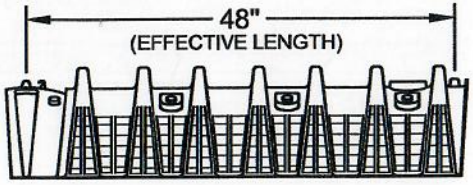

END VIEW

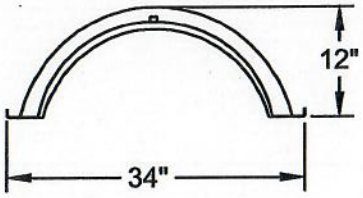

QUICK4 STANDARD MULTIPORT END CAP

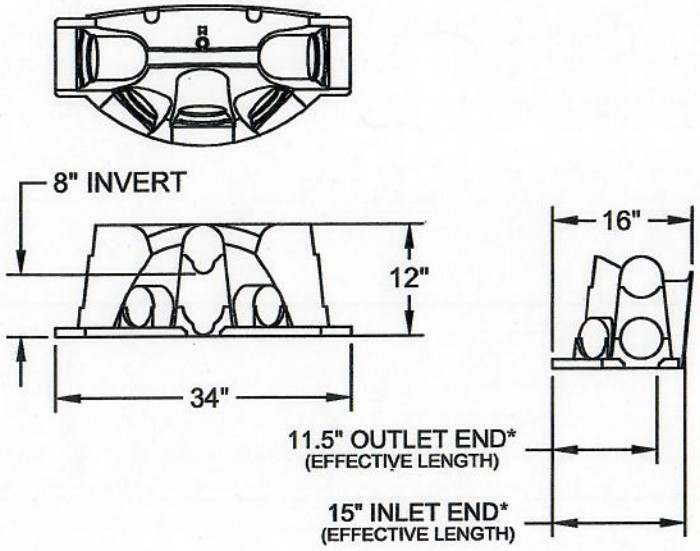

* ALL VIEWS = INSTALLED LENGTH.

INFILTRATOR
water technologies

INFILTRATOR WATER TECHNOLOGIES
4 Business Park Rd. Old Saybrook, CT 06475
(800) 221-4436

QUICK4 STANDARD CHAMBER
PRODUCT SPECIFICATIONS

Drawn by: EMB		Date: 05/21/2015
Scale: NOT TO SCALE	Checked by: DFH	Sheet: 1 of 1

Serial Distribution – Quick4 Plus Standard Chambers Using Quick4 Plus All-in-One 12 Endcaps as Drop Boxes

TYPICAL CROSS SECTION (not to scale)

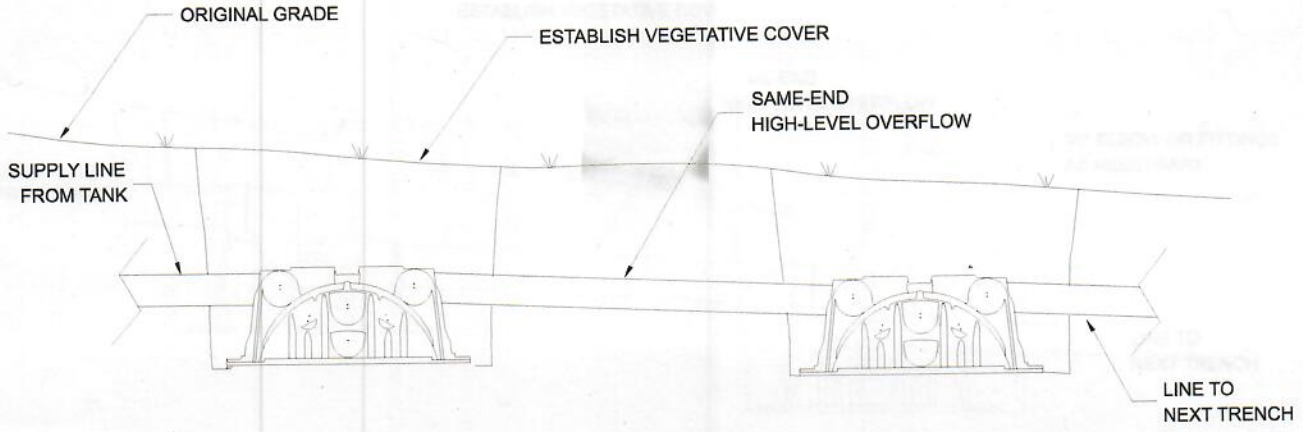

TYPICAL PLAN VIEW (not to scale)

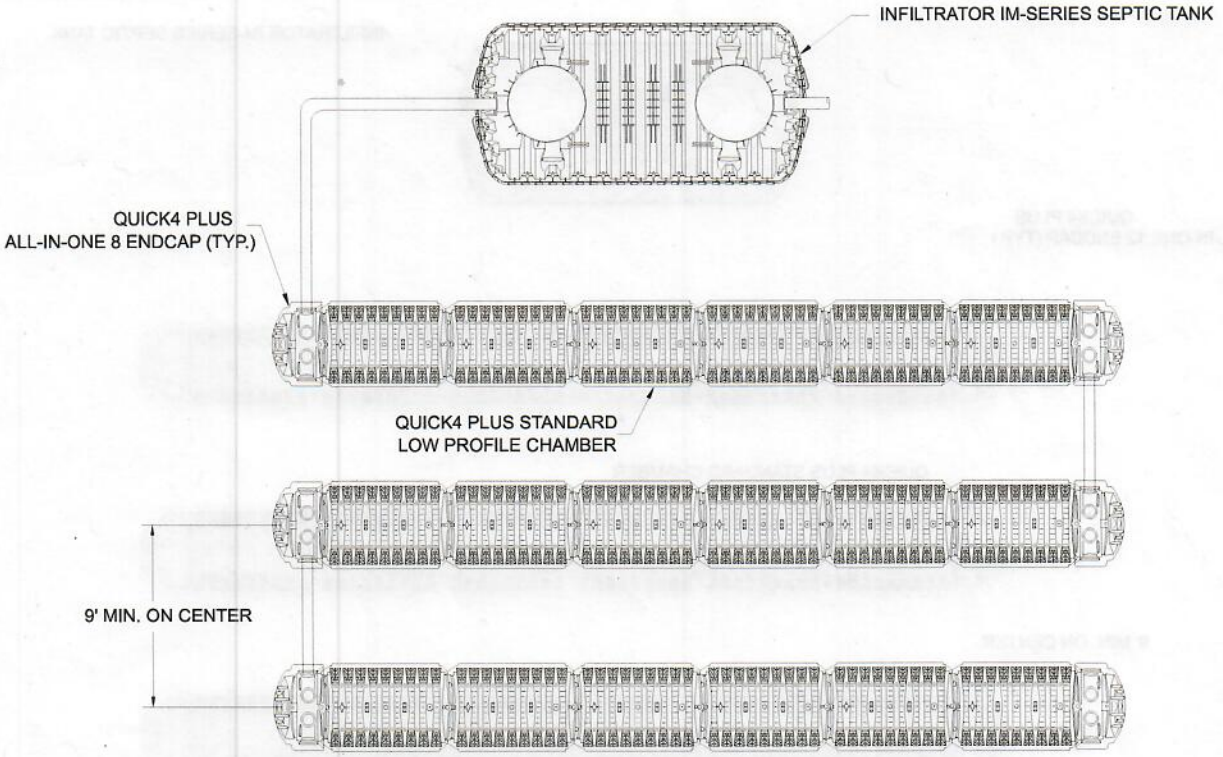

NOTES:

1. See endcap sizing chart to determine endcap linear foot credit.
2. These are schematic drawings only; pipe size, type and layout per design.
3. The Quick4 Plus Standard chamber is compatible with the Quick4 Plus All-in-One 12 Endcap. The Quick4 Plus Standard LP chamber is compatible with the Quick4 Plus All-in-One 8 Endcap and the Quick4 Plus 8 Endcap.

1000 Gallon, 2 Piece Septic Tank

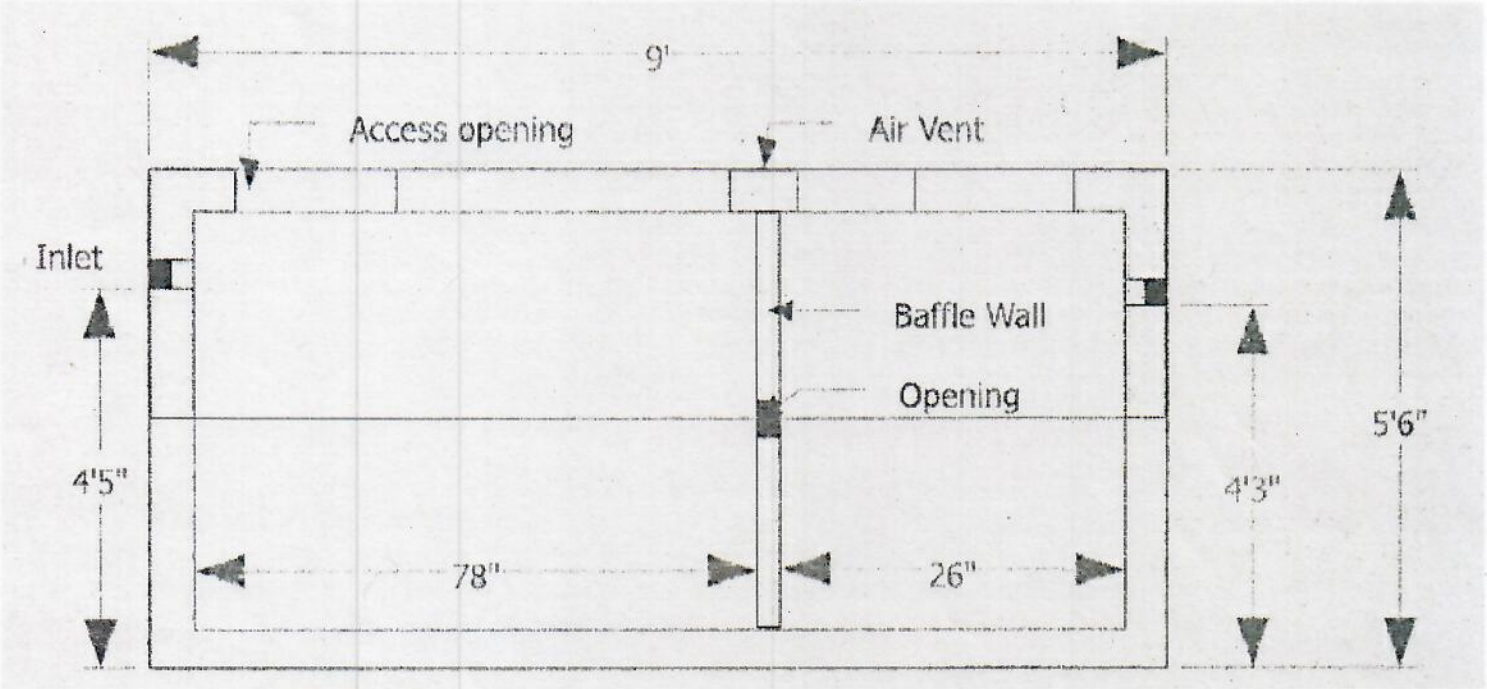

STB 103

Manufactured by :

GARNERS
Septic Tanks, Inc.
Eddie Garner, *President*
919-718-5181
121 Stanton Hill Road
Carthage, NC 28327 Fax 919-775-2229
Eddie@garnersseptictanks.com