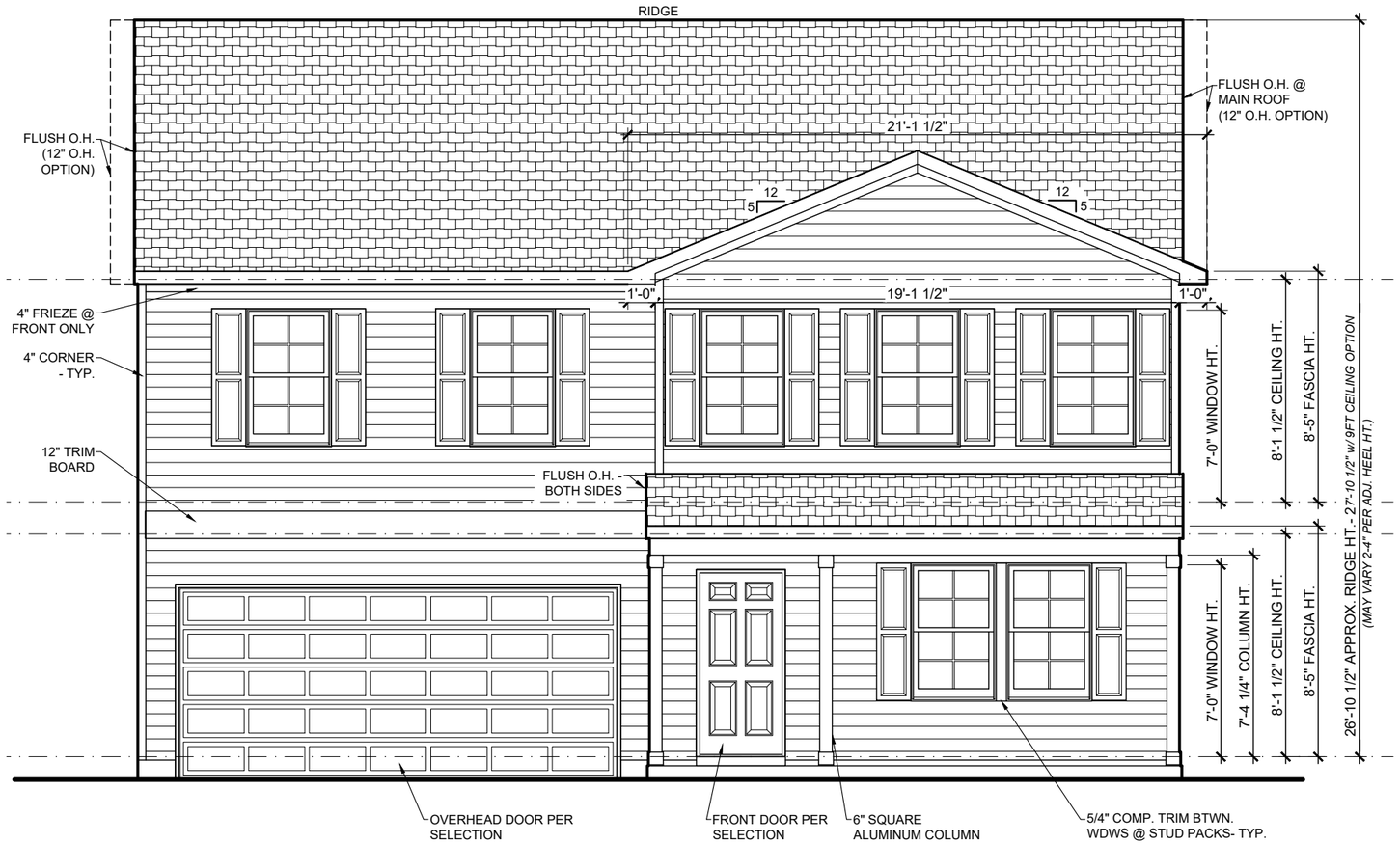


# FRONT ELEVATION

**3/16" = 1'-0"**

SEE SHEET AA-1 FOR STONE & BRICK WATER TABLE OPTIONS

9FT CEILING OPTION NOTES:

1. Fascia heights from 1st Flr of main house increase 12in. Fascia heights from 2nd Flr of main house remain the same.
2. Fascia/beam/column heights at Front and Rear Porches remain the same.
3. Roof pitch at porch may change. Follow notes at elevations.
4. Window heights and sizes remain the same.

## LISTS OF DRAWINGS

| | | | | | | | |
|---|---|---|---|---|---|---|---|
| **A1** | **Base Front Elevation** | **A2** | **Base Side & Rear Elevations** | **B1** | **First Floor Plan** | **E1** | **First Floor Electrical** |
| A1b | Front w/ 3rd Car Garage Opt. | A2b | Elevations w/ 3rd Car Garage Opt. | **B2** | **Second Floor Plan** | **E2** | **Second Floor Electrical** |
| AA-1 | Front w/ Brick/Stone Opt. | A3 | Elevations w/ Covered Porch Opt. | B3 | Plan Options/Details | E3 | Plan Options Electrical |
| | | **A-R1** | **Roof Plan** | **B4** | **Foundation Information Sheet** | | |
| | | | | B5 | 3rd Car Garage Option | | |

MUNGO HOMES EST. 1954

B Square Footages:

| | |
|---|---|
| 1st Floor | 1222 |
| 2nd Floor | 1549 |
| Garage | 374 |
| Front Porch | 78 |
| ~~Covered Porch Optional~~ | ~~120~~ |
| ~~3rd Car Garage Option~~ | ~~620~~ |
| | 2771 |

67 LLP

**Telfair B**

Genesis Series

v.04.03.00.00

GARAGE LEFT

Features:

Drawn By: pla

Rev By: cja,atw jsc, EB

Date: 12/2/2024

**A1**

## 9FT CEILING OPTION NOTES:

1. Fascia heights from 1st Flr of main house increase 12in. Fascia heights from 2nd Flr of main house remain the same.
2. Fascia/beam/column heights at Front and Rear Porches remain the same.
3. Roof pitch at porch may change. Follow notes at elevations.
4. Window heights and sizes remain the same.

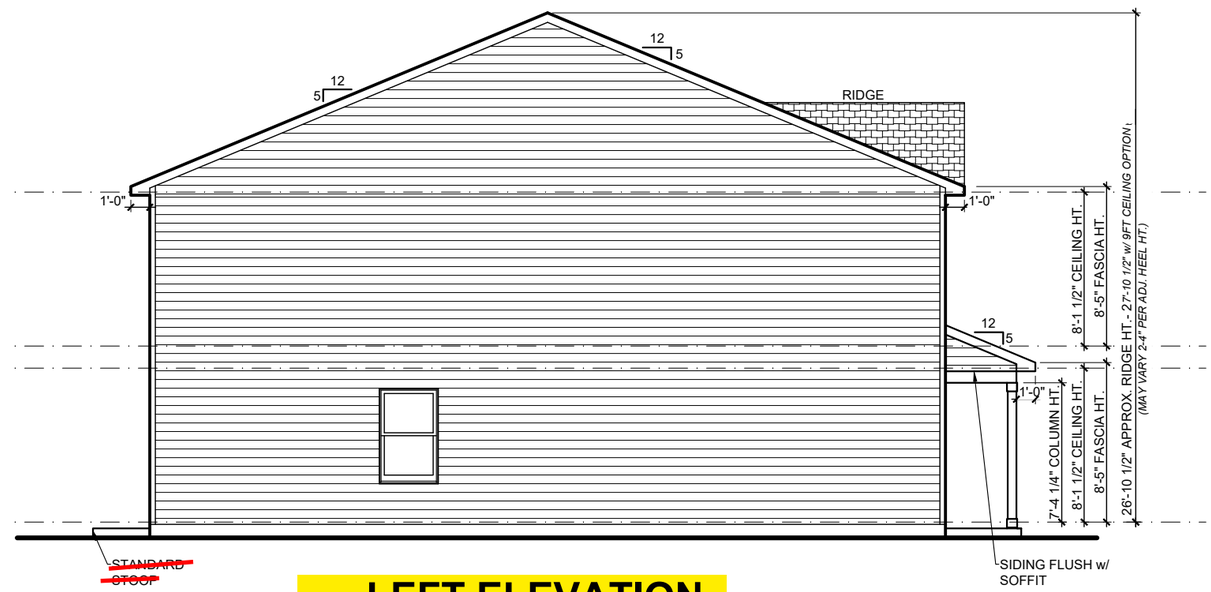


## LEFT ELEVATION

1/8" = 1'-0"

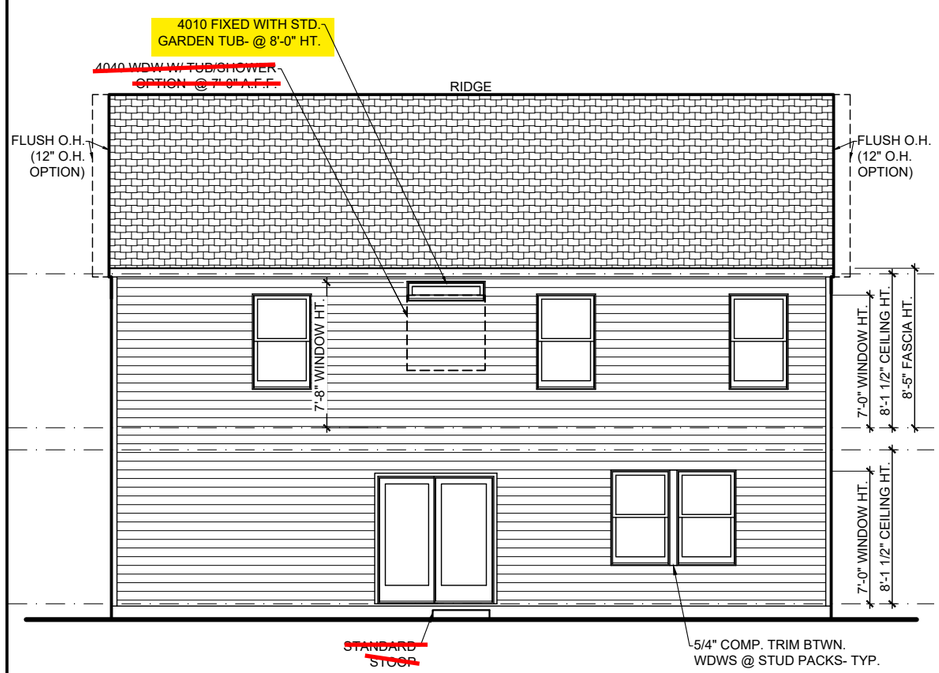


## REAR ELEVATION

1/8" = 1'-0"

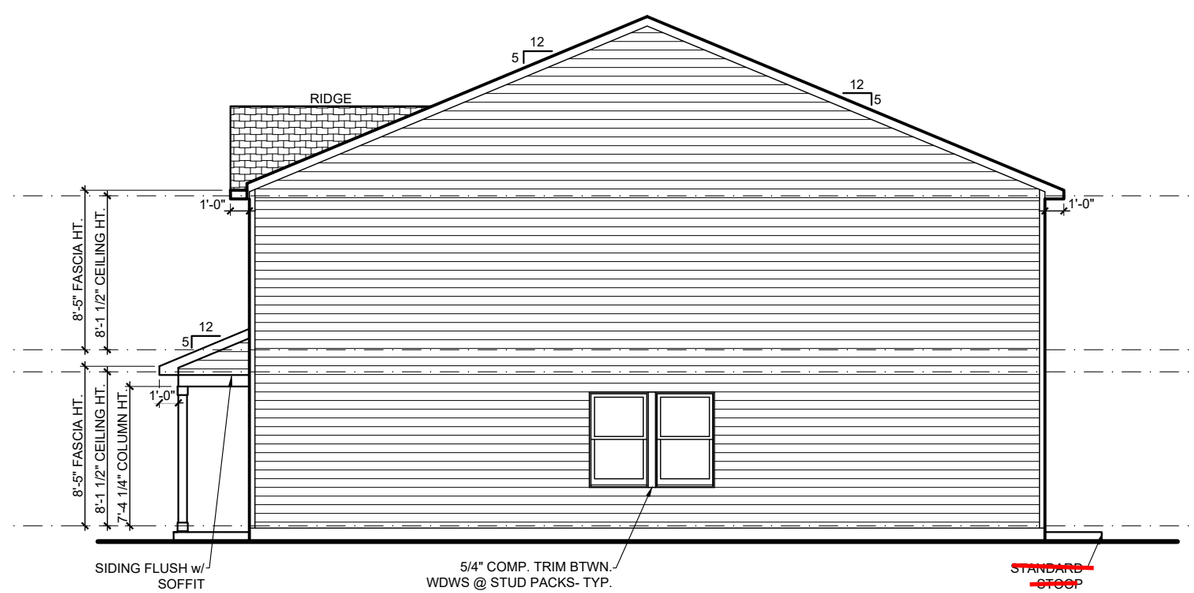


## RIGHT ELEVATION

1/8" = 1'-0"

EST. 1954 MH MUNGO HOMES

B Square Footages:

| | |
|---|---|
| 1st Floor | 1222 |
| 2nd Floor | 1549 |
| Garage | 374 |
| Front Porch | 78 |
| Covered Porch Optional | 120 |
| 3rd Car Garage Option | 220 |

# Telfair B

Genesis Series
v.04.03.00.00
GARAGE LEFT

Features:

Drawn By: pla
Rev By: cja,atw jsc, EB
Date: 12/2/2024

A2

**NOTES:**
1. ALL OVERHANGS ARE 1'-0" U.N.O.
2. ROOF PLANS *DO NOT* INCLUDE FULL BRICK OPTIONS.
3. ROOF PLANS ARE NOT INTENDED FOR CONSTRUCTION USE. (*INFORMATIONAL USE ONLY*)
4. BE SURE TO CHECK OVERHANG INFORMATION AT PLAN WHEN CALCULATING SOFFIT INTAKE

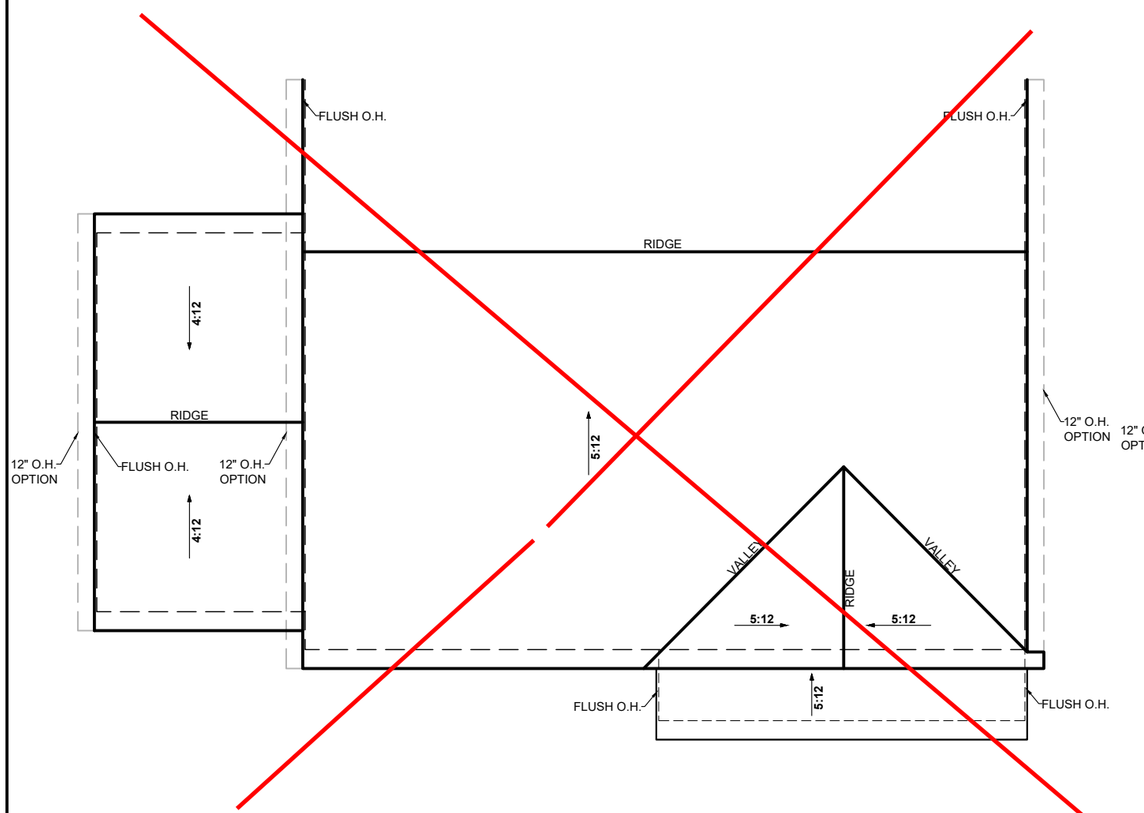


## 3rd Car Garage Option
1/8" = 1'-0"

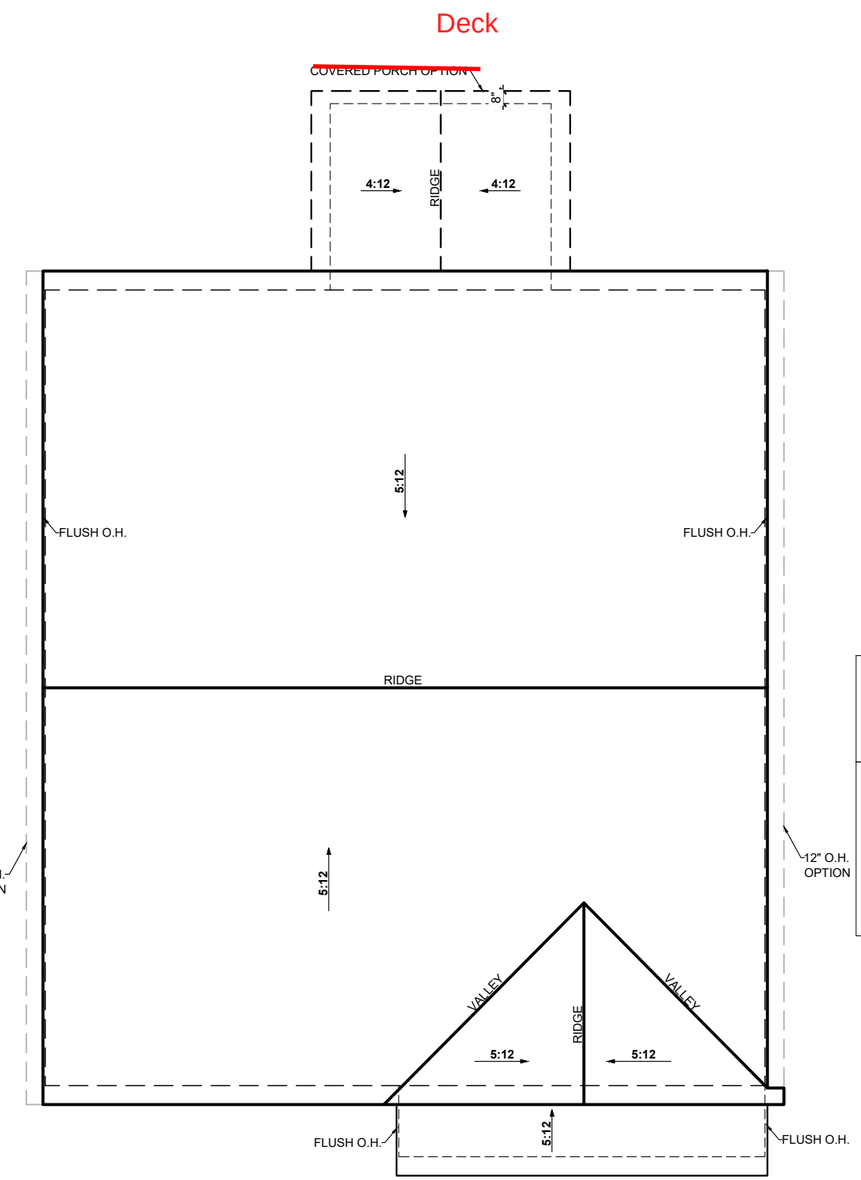


## ROOF PLAN
1/8" = 1'-0"

### ROOF INFORMATION SUMMARY

*MAIN ROOF-*

**Base House:**
Attic Square Footage.....1596 sf
Flat Soffit..... 56 lf
Ridge.....45 lf

*AREA(S) NOT AFFECTING MAIN ROOF-*

**Front Porch:**
Attic Square Footage.....73 sf
Flat Soffit.....19 lf
Roof to Wall Ridge.....18 lf

**Rear Covered Porch Option:**
Attic Square Footage.....115 sf
Flat Soffit.....20 lf
Ridge.....9 lf

B Square Footages:

1st Floor.....1222
2nd Floor.....1549
Garage.....374
Front Porch.....78
Covered Porch Optional.....120
3rd Car Garage Option.....220

# Telfair B
Genesis Series
v.04.03.00.00
GARAGE LEFT

Features:

Drawn By: pla
Rev By: cja,atw jsc, EB
Date: 12/2/2024

# A-R 1

**3- STUD PACK NOTE:**
**ALL FRAMING BETWEEN WINDOWS TO BE WRAPPED IN ICE & WATER SHIELD OR OTHER WEATHER RESISTANT BARRIER BEFORE WINDOWS ARE INSTALLED. MAINTAIN DRAINAGE PLAN FROM TOP TO BOTTOM WITH HOUSEWRAP- TYPICAL.**

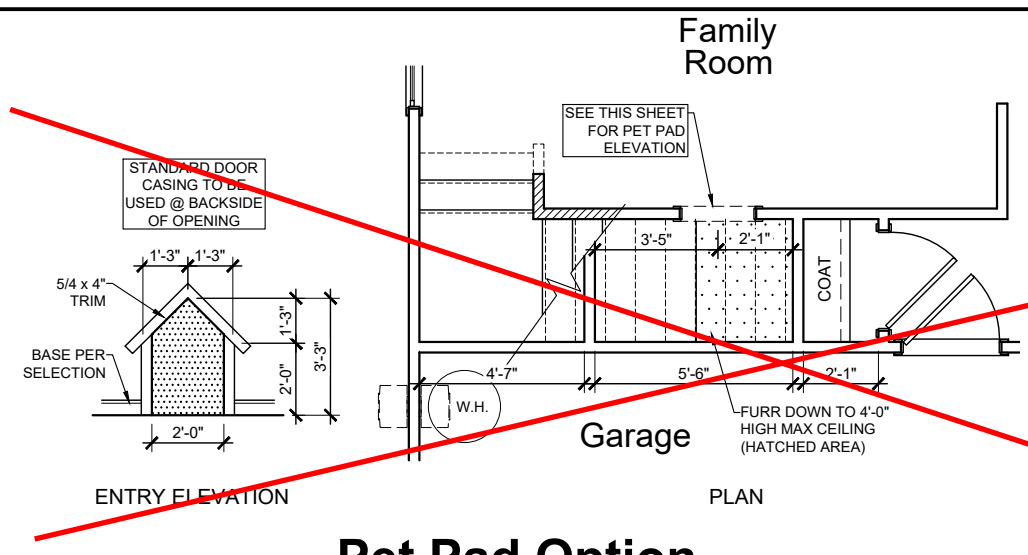


## Pet Pad Option

3/16" = 1'-0"

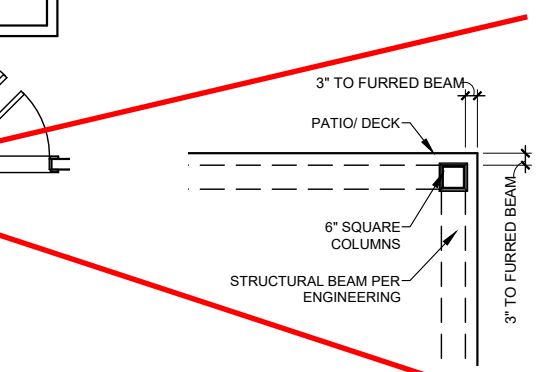


## COVERED PORCH OPTION INFORMATION

1/4" = 1'-0"

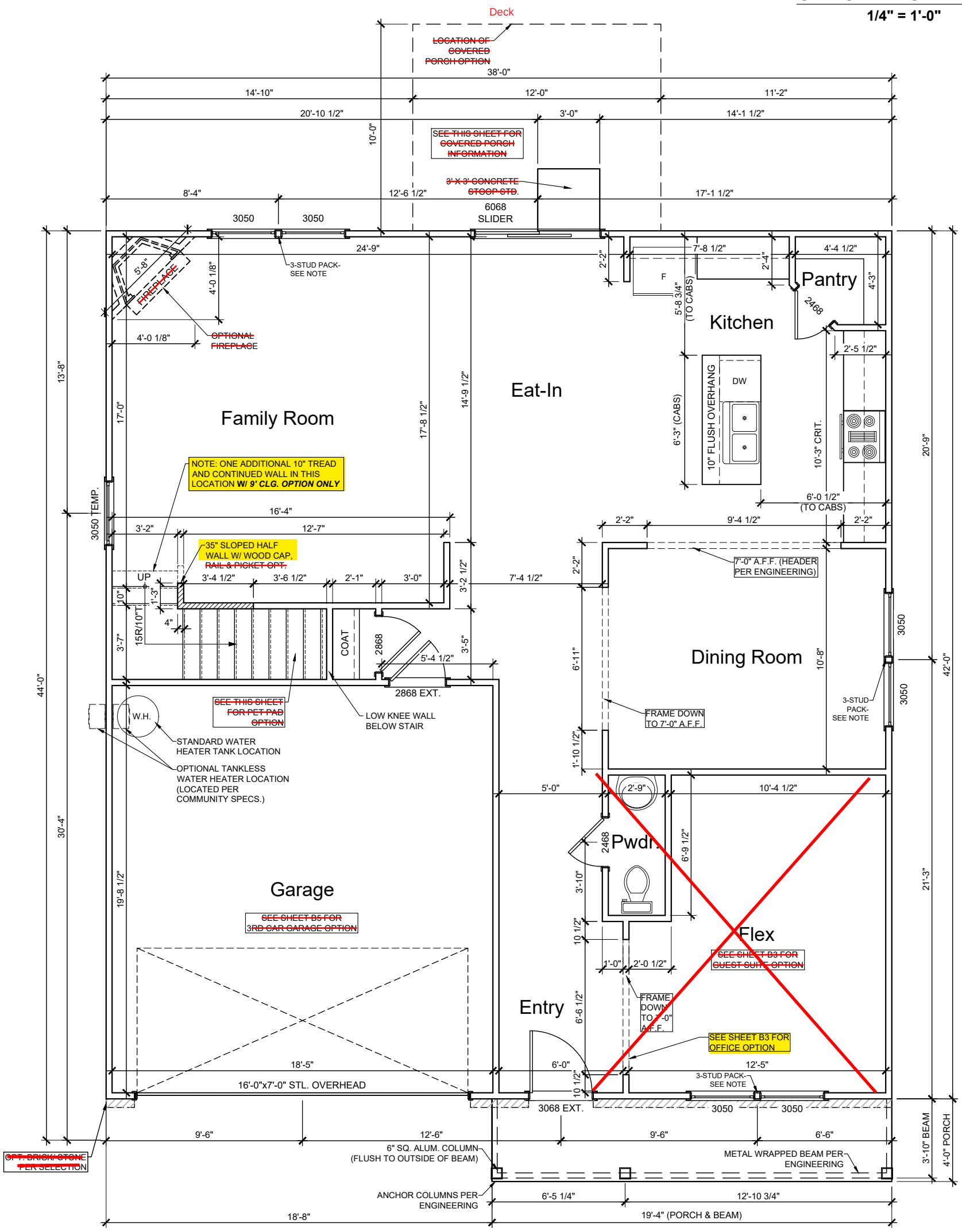


## FIRST FLOOR

3/16" = 1'-0"

**NOTES:**
1. SEE ENGINEERING FOR FRAMING PLANS.
2. 8'-0" CEILING HEIGHTS @ 1ST FLOOR (*9FT CLG. OPT.*) U.N.O.
3. 8'-0" CEILING HEIGHTS @ 2ND FLOOR U.N.O.
4. WINDOW HEIGHTS VARY - FOLLOW ELEVATIONS CAREFULLY.
5. ALL ANGLES ARE 45° UNLESS NOTED OTHERWISE.

**B1**

Features:

Drawn By: pla — Rev By: cja,atw jsc, EB

Date: 12/2/2024

# Telfair B

Genesis Series
v.04.03.00.00
GARAGE LEFT

B Square Footages:

| | |
|---|---|
| 1st Floor | 1222 |
| 2nd Floor | 1549 |
| Garage | 374 |
| Front Porch | 78 |
| Covered Porch Optional | 120 |
| 3rd Car Garage Option | 220 |

EST. 1954 MH MUNGO HOMES

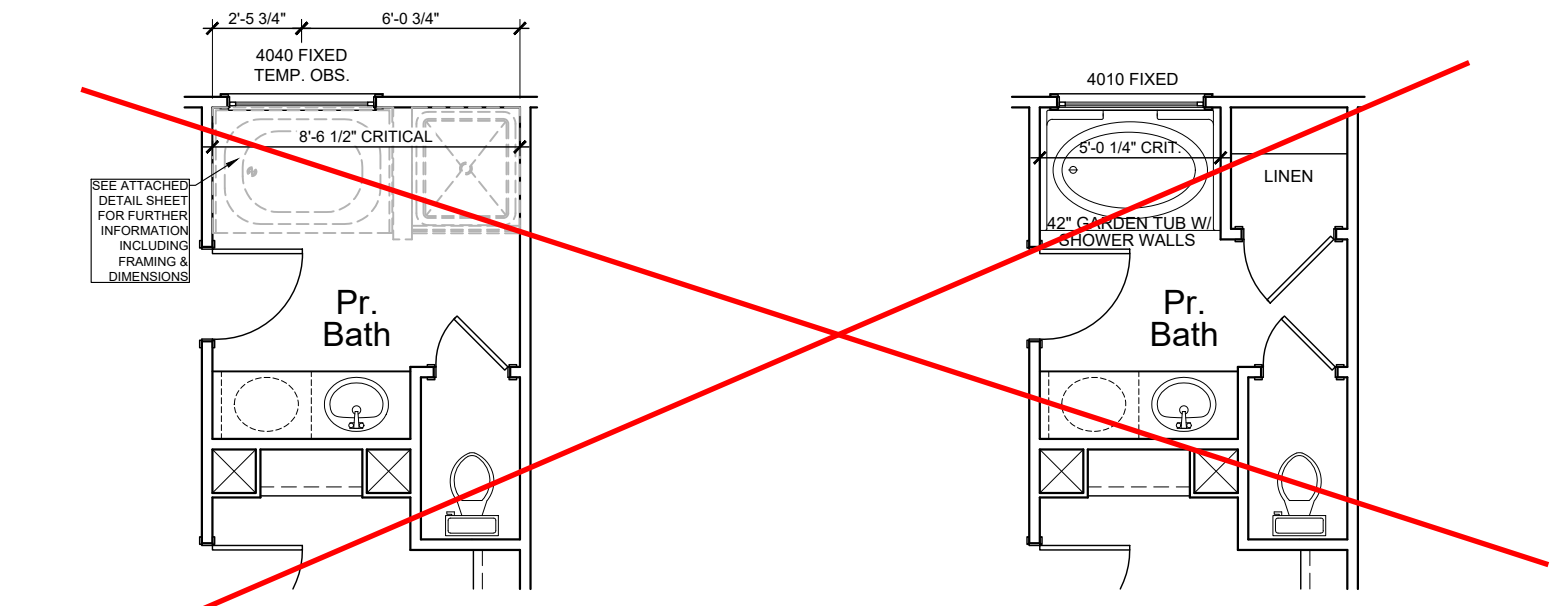


## Tub/ Shower Option

**FOR ORIENTATION PURPOSES ONLY**
**@ PRIMARY BATH @ 2ND FLOOR**

## Garden Tub Opt.

**3/16" = 1'-0"** **@ PRIMARY BATH**

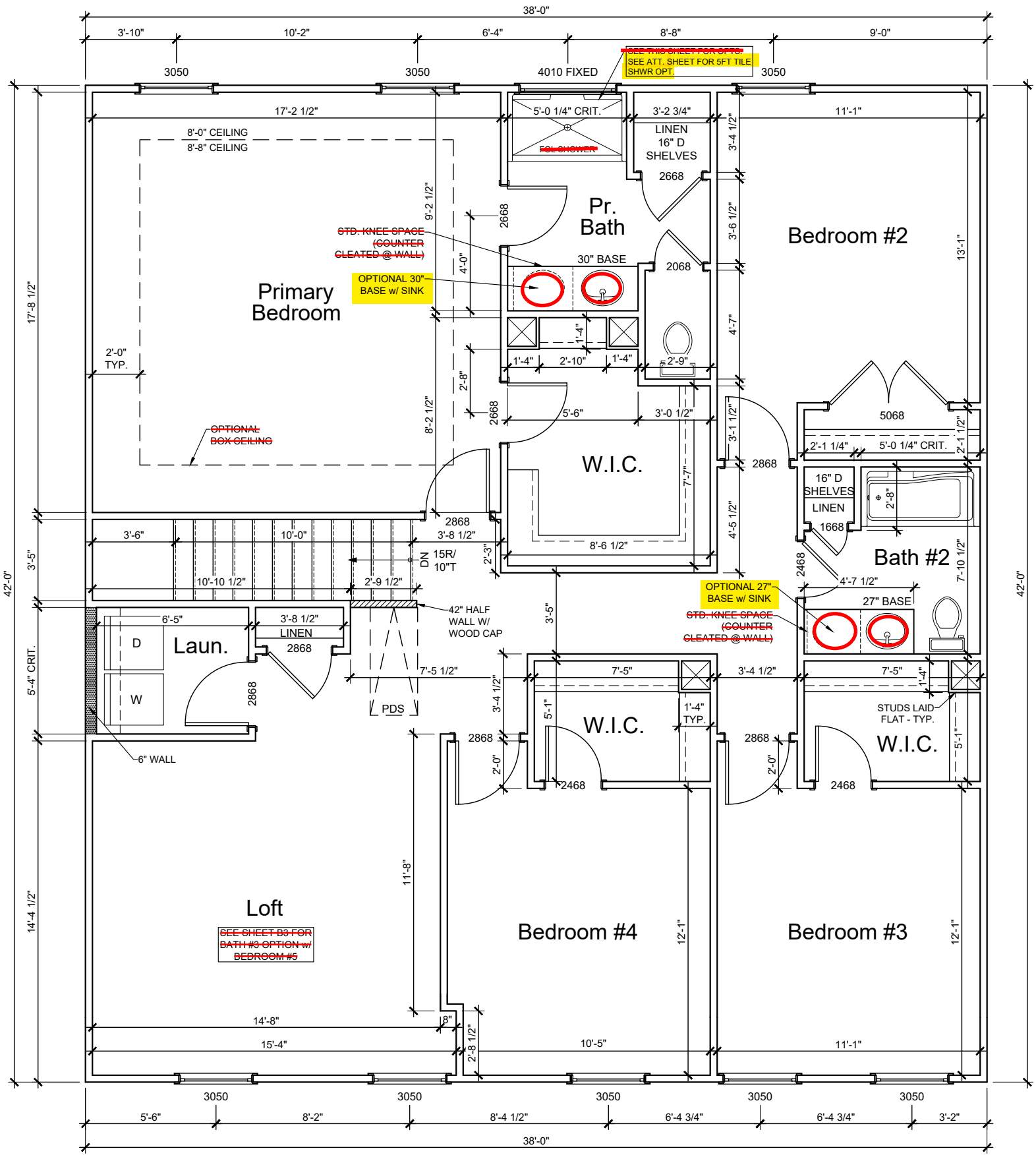


## SECOND FLOOR

**3/16" = 1'-0"**

| | | | |
|---|---|---|---|
| **B2** | Features: | **Telfair B**<br>Genesis Series<br>v.04.03.00.00<br>GARAGE LEFT | 1st Floor.....1222<br>2nd Floor.....1549<br>Garage.....374<br>Front Porch.....78<br>Covered Porch Optional.....120<br>3rd Car Garage Option.....220<br>B Square Footages: |
| | Drawn By: pla<br>Rev By: cja,atw jsc, EB | | |
| | Date: 12/2/2024 | | |

NOTE: THIS DETAIL IS NOT PLAN SPECIFIC, BUT SHOULD MATCH THE SHOWER ORIENTATION ON EACH PLAN SET.

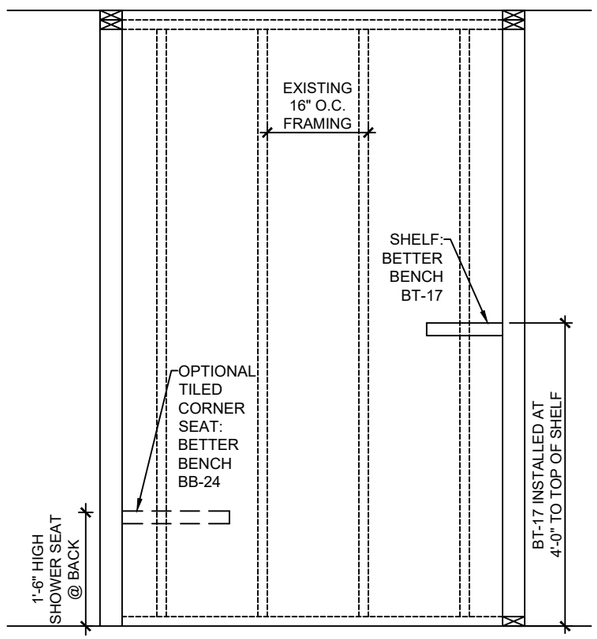


**SHOWER SHELF & OPT. CORNER SEAT INFORMATION**

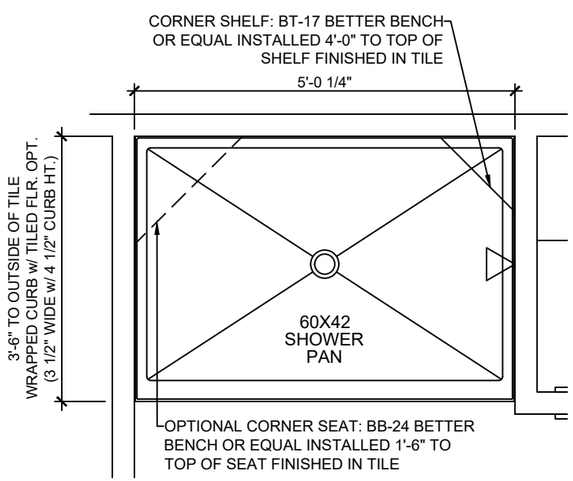


## FLOOR PLAN

SCALE: 1/2" = 1'-0"

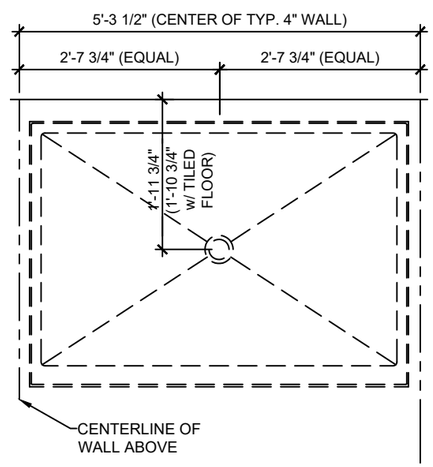


## FOUNDATION INFO.

SCALE: 1/2" = 1'-0"

# (SHOWER DRAIN/ HEAD RIGHT)

NOTE: THIS DETAIL IS NOT PLAN SPECIFIC, BUT SHOULD MATCH THE SHOWER ORIENTATION ON EACH PLAN SET.

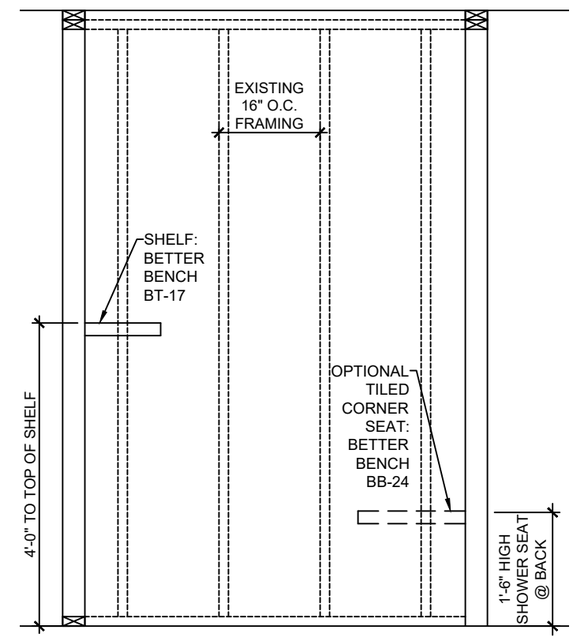


**SHOWER SHELF & OPT. CORNER SEAT INFORMATION**

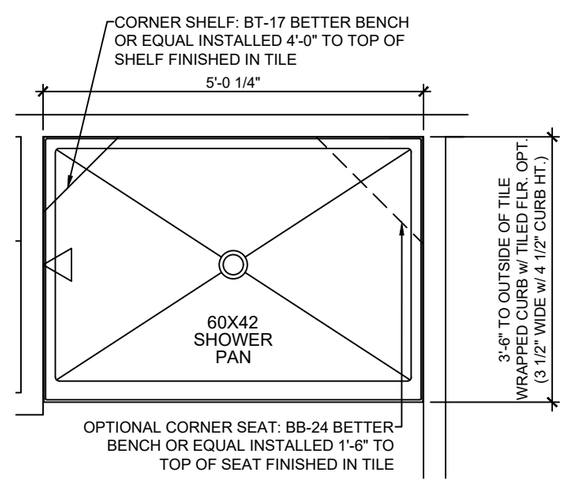


## FLOOR PLAN

SCALE: 1/2" = 1'-0"

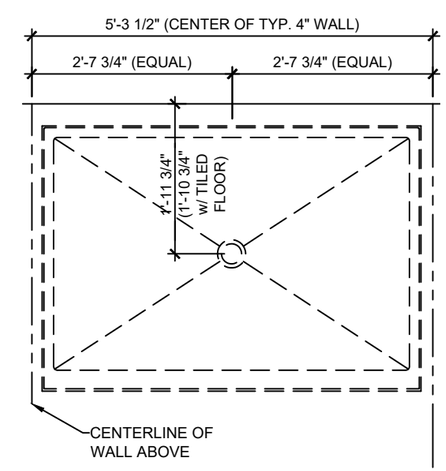


## FOUNDATION INFO.

SCALE: 1/2" = 1'-0"

# (SHOWER DRAIN/ HEAD LEFT)

MUNGO HOMES EST. 1954

**PRIMARY BATH**
**5' TILE SHOWER ONLY OPTION**
**(60x42)**
SCALE: 1/2" = 1'-0"

Drawn By: KBM
Rev By: AM
Date: 7/14/2025

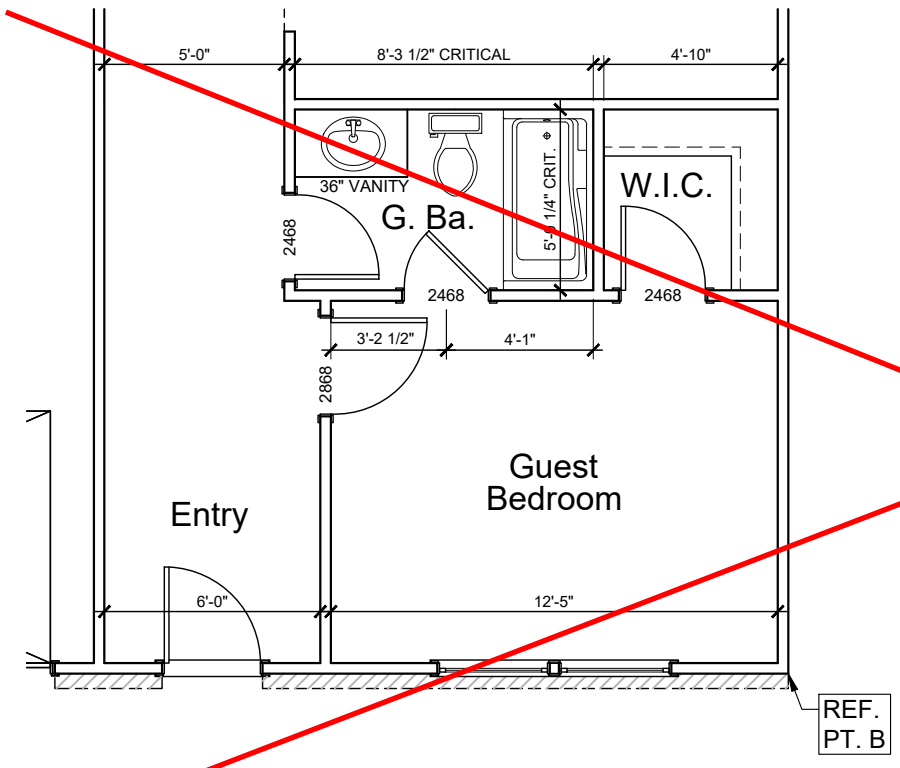


## Guest Suite Option

3/16" = 1'-0" I.L.O. FLEX

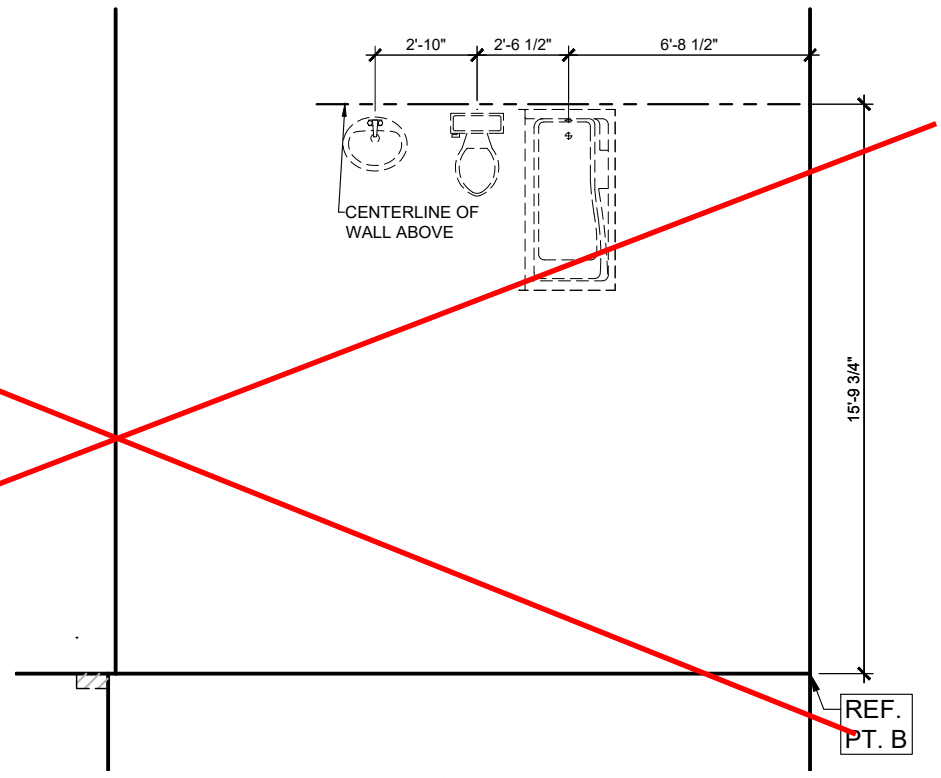


## Guest Suite Option

3/16" = 1'-0" FOUNDATION INFO.

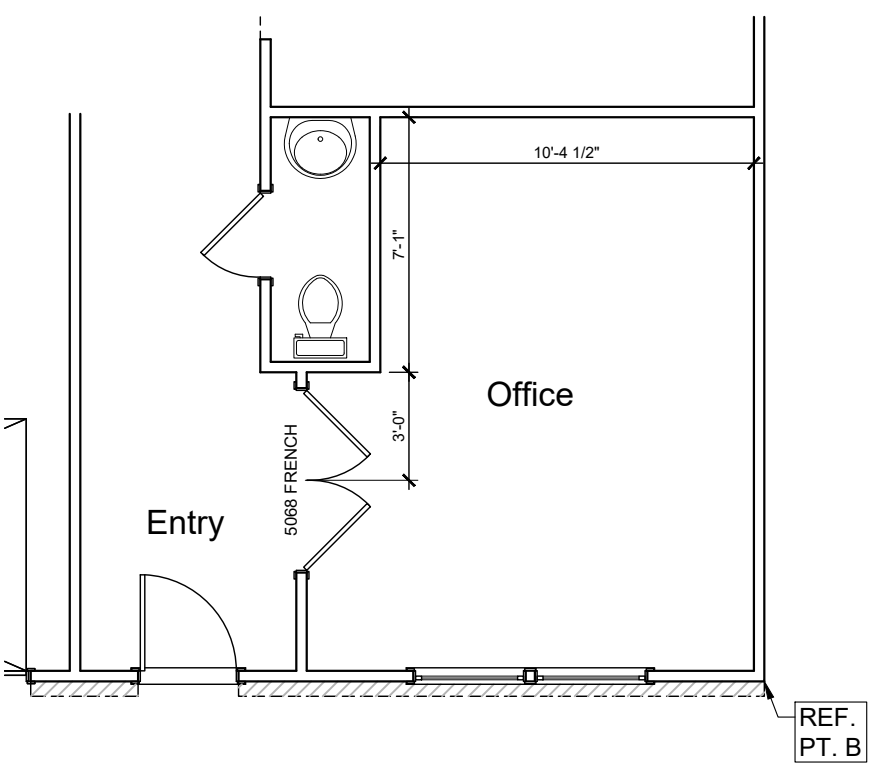


## Office Option

3/16" = 1'-0" @ FLEX

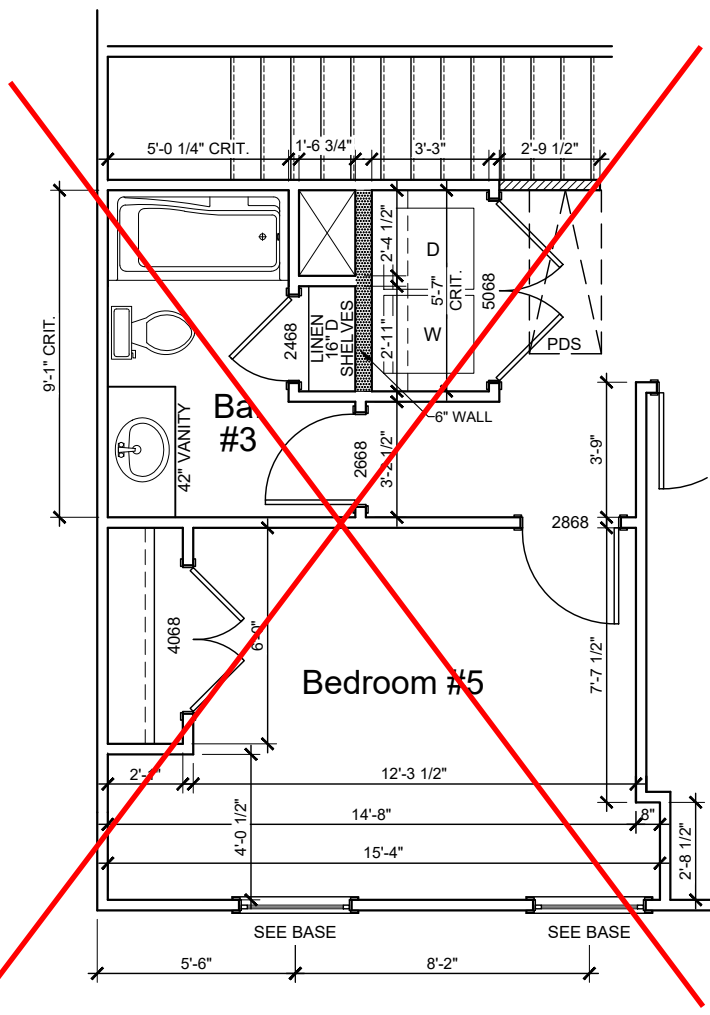


## Bath #3 Option w/ BR #5

3/16" = 1'-0" I.L.O. LOFT

B3

Features:

Drawn By: pla Rev By: cja,atw jsc, EB

Date: 12/2/2024

# Telfair B

Genesis Series
v.04.03.00.00

GARAGE LEFT

| | |
|---|---|
| 1st Floor | 1222 |
| 2nd Floor | 1549 |
| Garage | 374 |
| Front Porch | 78 |
| Covered Porch Optional | 120 |
| 3rd Car Garage Option | 220 |

B Square Footages:

EST. 1954 MH MUNGO HOMES

NOTES:
1. SEE ENGINEERING FOR STRUCTURAL INFORMATION
2. CONTROL JOINTS
- PROVIDE CONTROL JOINTS AT ALL INSIDE CORNERS OF SLAB EDGES, AND OTHER LOCATIONS WHERE SLAB CRACKS ARE LIKELY TO DEVELOP.
- JOINTS SHALL BE LOCATED @ 10'-0" O.C. (RECOMMENDED) OR 15'-0" O.C. (MAXIMUM).
- JOINT GRID PATTERN SHALL BE AS CLOSE TO SQUARES AS POSSIBLE (1:1 RATIO), WITH A MAXIMUM OF 1:1.5 RATIO.
- CONTROL JOINTS SHALL NOT BE INSTALLED IN STRUCTURAL SLABS.

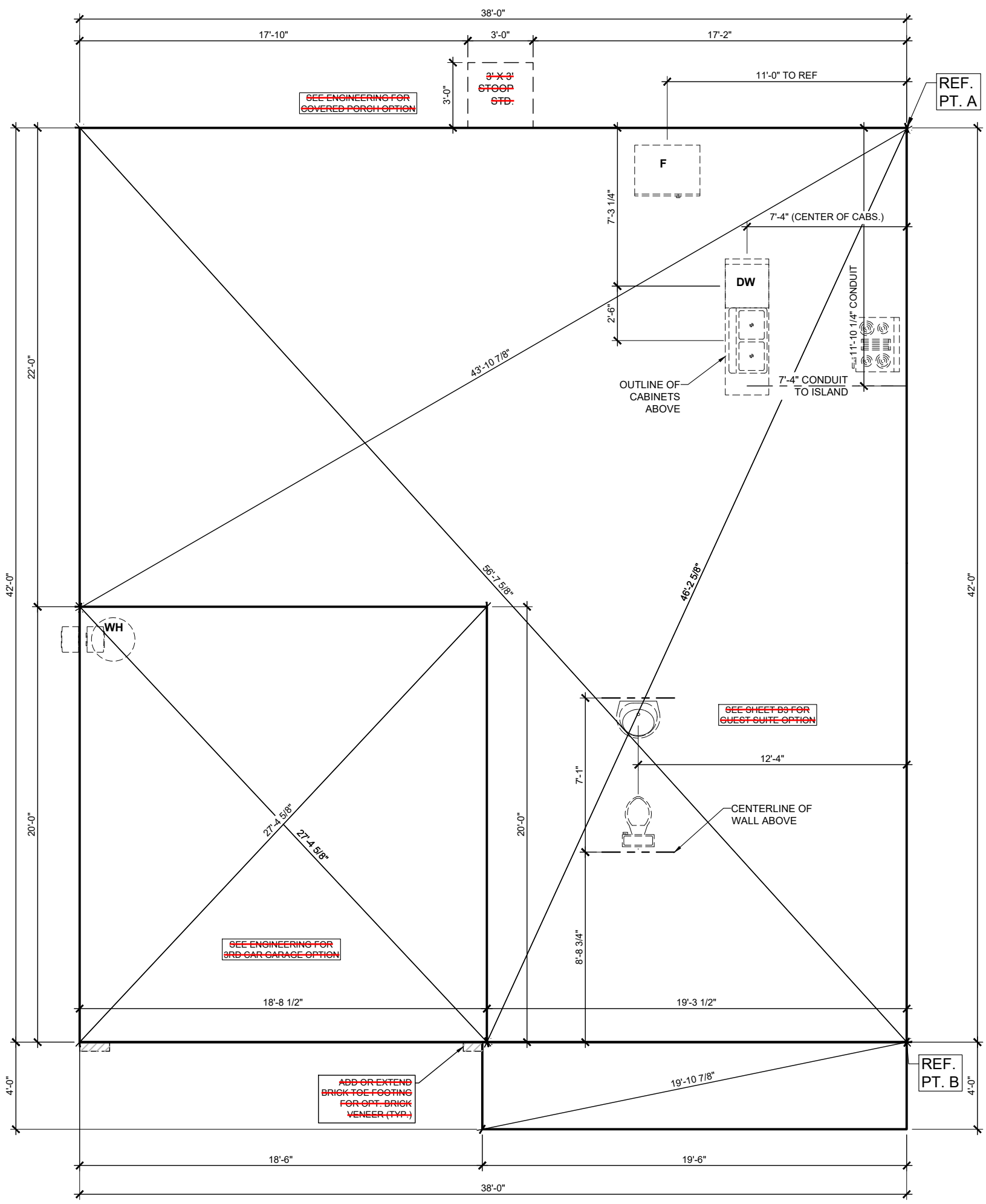


# FOUNDATION INFORMATION SHEET

3/16" = 1'-0"

| | | | |
|---|---|---|---|
| B4 | Features: FOUNDATION INFO. SHEET | Telfair B | B Square Footages: |
| | Drawn By: pla — Rev By: cja,atw jsc, EB | Genesis Series v.04.03.00.00 | 1st Floor....1222 |
| | Date: 12/2/2024 | GARAGE LEFT | 2nd Floor....1549 |
| | | | Garage....374 |
| | | | Front Porch....78 |
| | | | Covered Porch Optional....120 |
| | | | 3rd Car Garage Option....220 |

EST. 1954 MH MUNGO HOMES

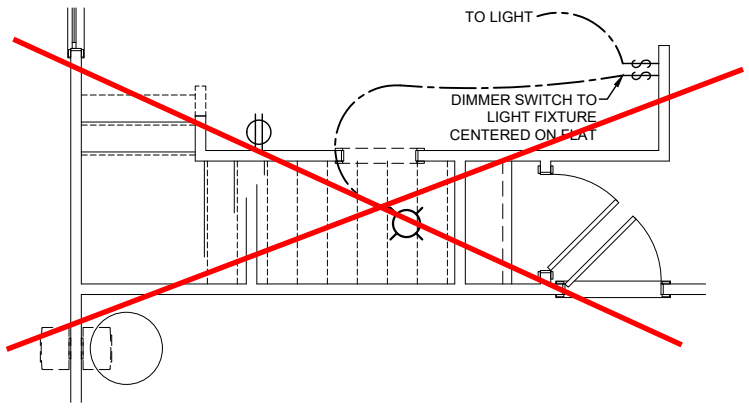


## Pet Pad Option

3/16" = 1'-0"

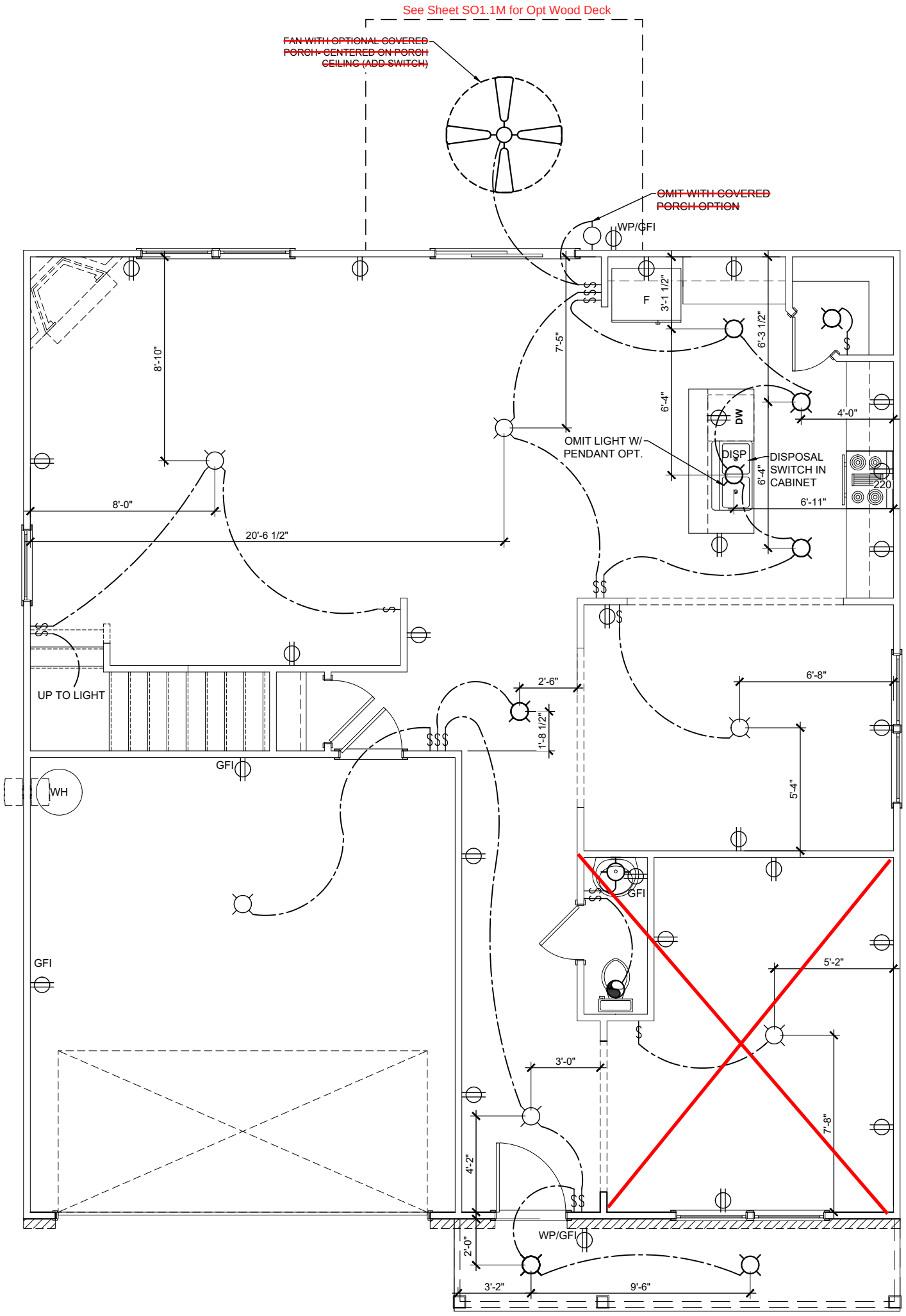


## FIRST FLOOR - ELECTRICAL

3/16" = 1'-0"

E1

Features:

Drawn By: pla

Rev By: cja,atw jsc, EB

Date: 12/2/2024

# Telfair B

Genesis Series

v.04.03.00.00

GARAGE LEFT

B Square Footages:

| | |
|---|---|
| 1st Floor | 1222 |
| 2nd Floor | 1549 |
| Garage | 374 |
| Front Porch | 78 |
| Covered Porch Optional | 120 |
| 3rd Car Garage Option | 220 |

EST. 1954 MH MUNGO HOMES

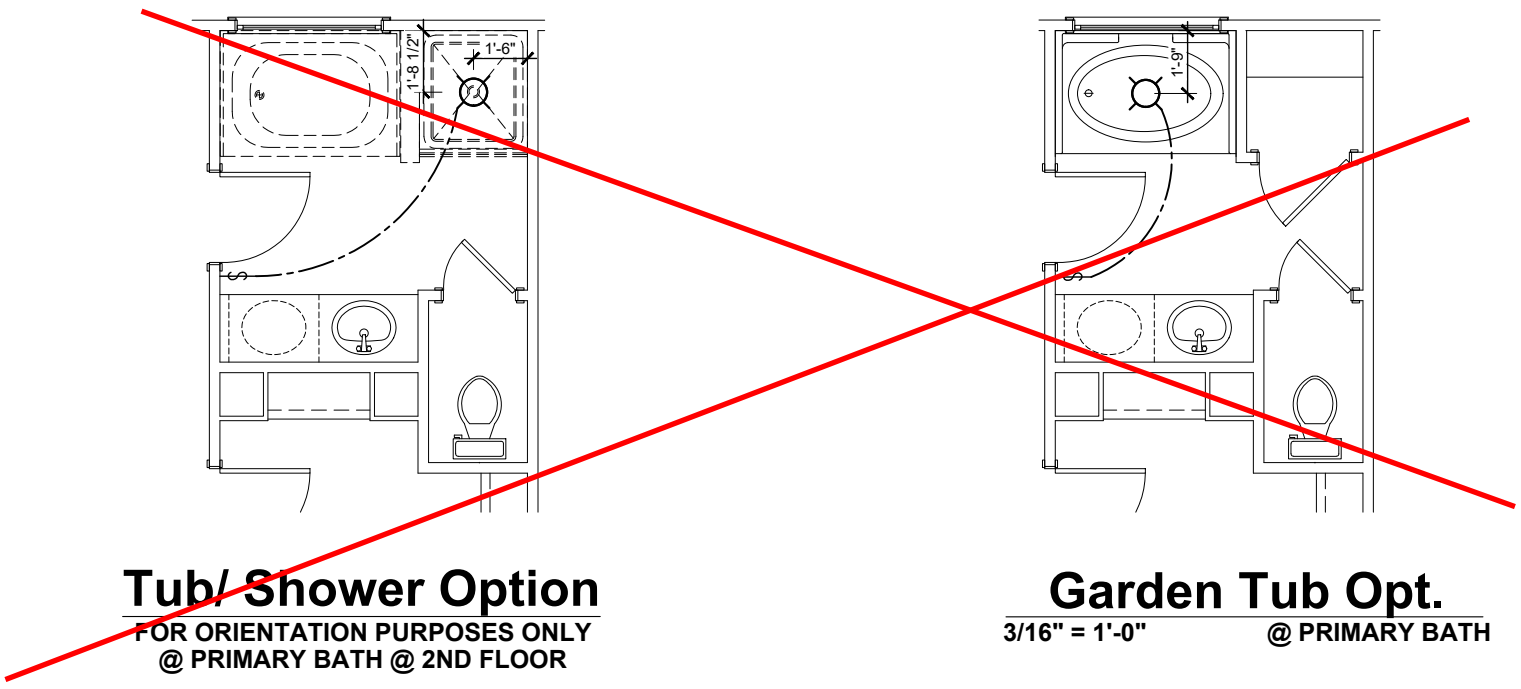


## Tub/ Shower Option

FOR ORIENTATION PURPOSES ONLY
@ PRIMARY BATH @ 2ND FLOOR

## Garden Tub Opt.

3/16" = 1'-0" @ PRIMARY BATH

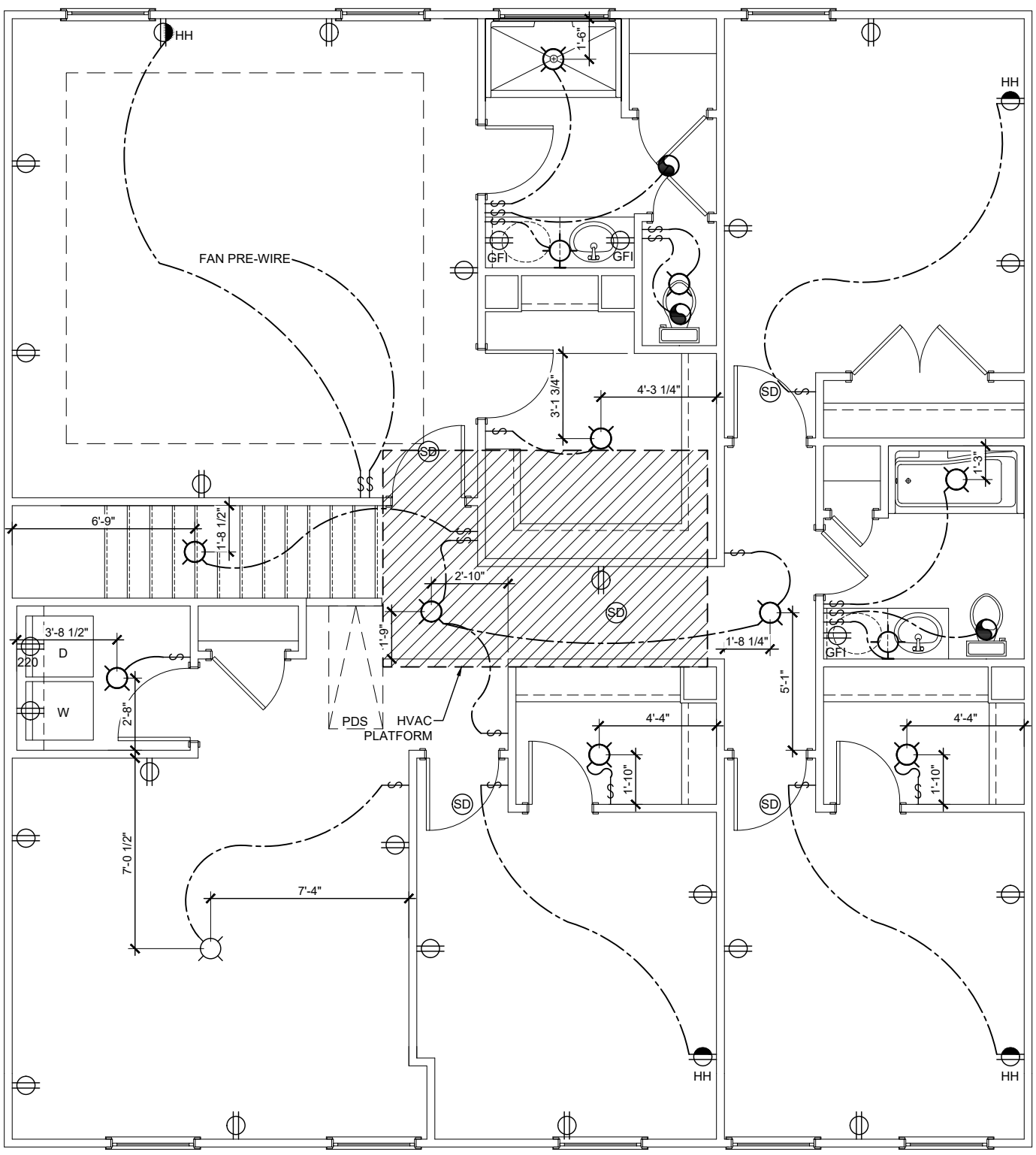


## SECOND FLOOR - ELECTRICAL

3/16" = 1'-0"

E2

Features:

Drawn By: pla
Rev By: cja,atw jsc, EB

Date: 12/2/2024

# Telfair B

Genesis Series
v.04.03.00.00
GARAGE LEFT

B Square Footages:

| | |
|---|---|
| 1st Floor | 1222 |
| 2nd Floor | 1549 |
| Garage | 374 |
| Front Porch | 78 |
| Covered Porch Optional | 120 |
| 3rd Car Garage Option | 220 |

EST. 1954 MH MUNGO HOMES

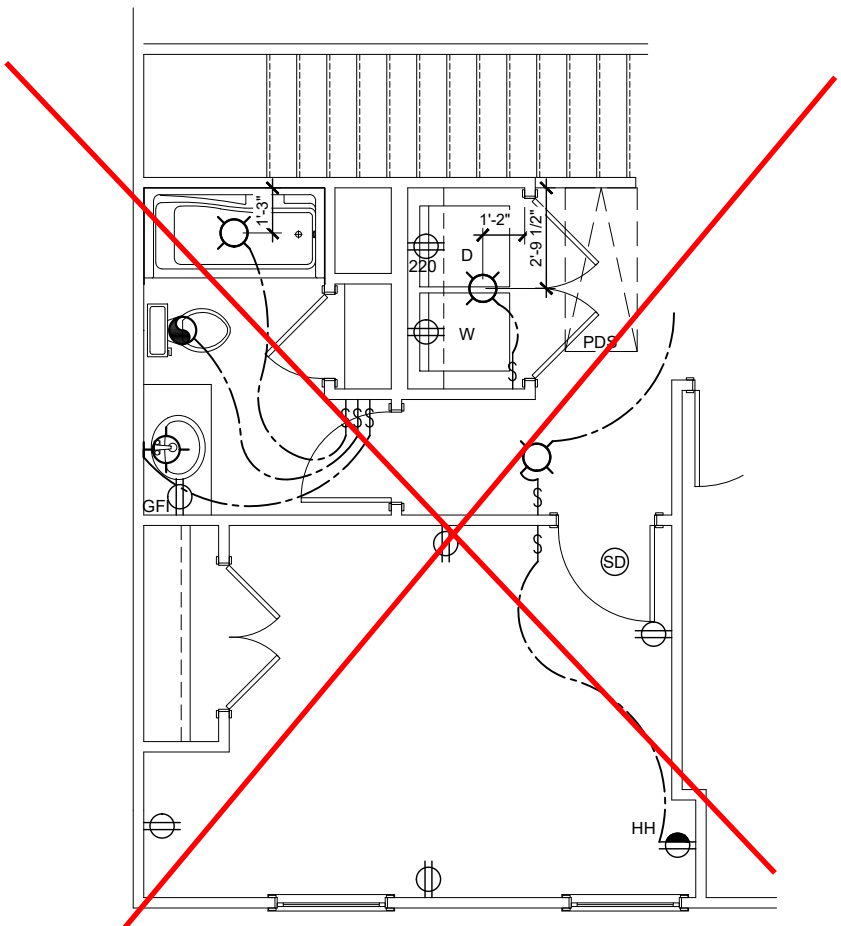


## Bath #3 Option w/ BR #5

3/16" = 1'-0" I.L.O. LOFT

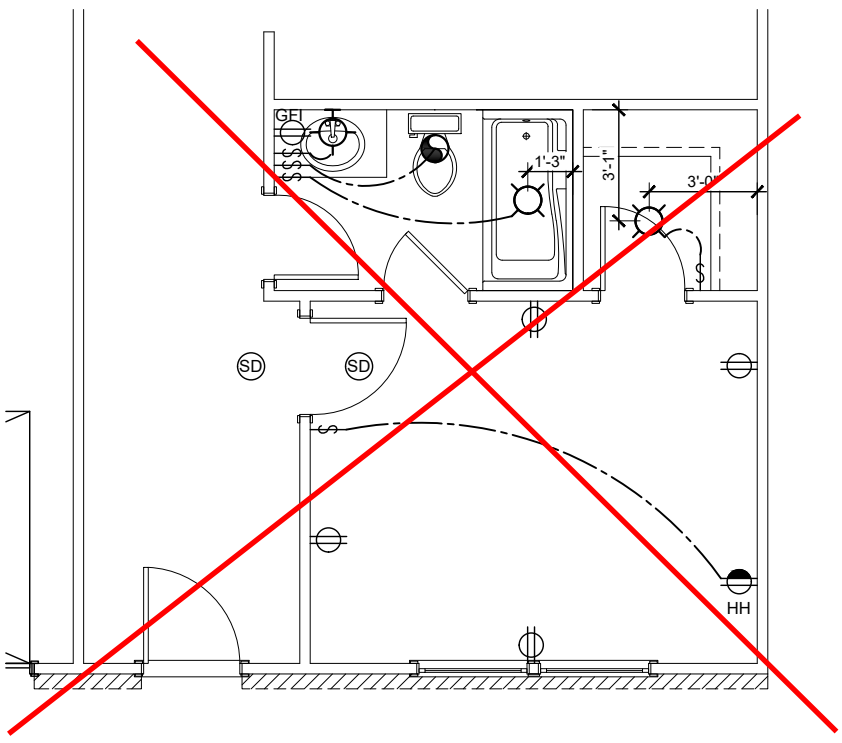


## Guest Suite Option

3/16" = 1'-0" I.L.O. FLEX

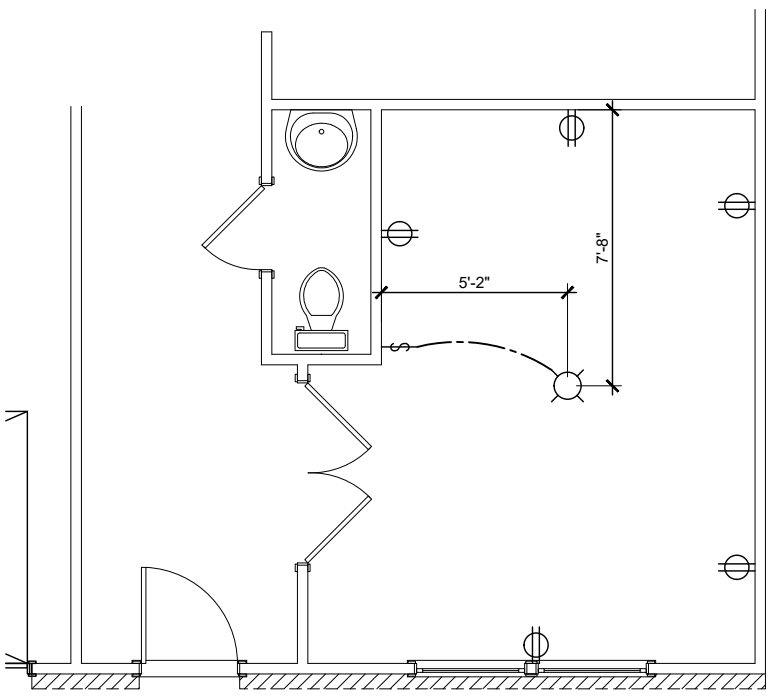


## Office Option

3/16" = 1'-0" @ FLEX

E3

Features:

Drawn By: pla Rev By: cja,atw jsc, EB

Date: 12/2/2024

# Telfair B

Genesis Series
v.04.03.00.00

GARAGE LEFT

B Square Footages:

| | |
|---|---|
| 1st Floor | 1222 |
| 2nd Floor | 1549 |
| Garage | 374 |
| Front Porch | 78 |
| Covered Porch Optional | 120 |
| 3rd Car Garage Option | 220 |

EST. 1954 MH MUNGO HOMES

3/27/25

# CONNECTION SPECIFICATIONS (TYP. U.N.O.)

| DESCRIPTION OF BLDG. ELEMENT | 3"x0.131" NAILS | 3"x0.120" NAILS |
|---|---|---|
| JOIST TO SOLE PLATE | (3) TOENAILS | (3) TOENAILS* |
| SOLE PL. TO JOIST/RIM OR BLK'G | NAILS @ 6" o.c. | NAILS @ 4" o.c. |
| STUD TO PLATE | (4) TOENAILS/ (3)END NAILS | (4) TOENAILS/ (4)END NAILS* |
| RIM TO TOP PLATE | TOENAILS @ 6" o.c. | TOENAILS @ 4" o.c.* |
| BLK'G. BTWN. JOISTS TO TOP PL. | (3) TOENAILS EA. END | (3) TOENAILS EA. END* |
| DOUBLE STUD | NAILS @ 16" o.c. | NAILS @ 16" o.c. |
| DOUBLE TOP PLATE | NAILS @ 12" o.c. | NAILS @ 8" o.c. |
| DOUBLE TOP PLATE LAP SPLICE | (12) NAILS IN LAPPED AREA (24" MIN.) | (15) NAILS IN LAPPED AREA (24" MIN.) |
| TOP PLATE LAP @ CORNERS & INTERSECTING WALLS | (3) NAILS | (3) NAILS |
| ADJACENT FULL-HEIGHT STUD TO END OF HEADER | (4) NAILS | (4) NAILS |
| RAFTER/TRUSS TO TOP PLATE | (4) TOENAILS + (1) SIMPSON H2.5T | (4) TOENAILS + (1) SIMPSON H2.5T |
| GAB. END TRUSS TO DBL. TOP PL. | TOENAILS @ 8" o.c. | TOENAILS @ 6" o.c. |
| R.T. w/ HEEL HT. 9 ¼" TO 12" | 2x10 BLK EVERY 3RD BAY FASTENED TO DBL. TOP PLATE w/ TOENAILS @ 6" O.C. | 2x10 BLK EVERY 3RD BAY FASTENED TO DBL. TOP PLATE w/ TOENAILS @ 4" O.C. |
| R.T. w/ HEEL HT. 12" TO 16" | 2x12 BLK EVERY 3RD BAY FASTENED TO DBL. TOP PLATE w/ TOENAILS @ 6" O.C. | 2x12 BLK EVERY 3RD BAY FASTENED TO DBL. TOP PLATE w/ TOENAILS @ 4" O.C. |
| R.T. w/ HEEL HT. UP TO 24" | LAP WALL SHTG. w/ DBL. TOP PL. & INSTALL ON TRUSS VERT. - FASTEN w/ NAILS @ 6" O.C. | LAP WALL SHTG. w/ DBL. TOP PL. & INSTALL ON TRUSS VERT. - FASTEN w/ NAILS @ 6" O.C.* |
| R.T. w/ HEEL HT. 24" TO 48" | LAP WALL SHTG. w/ DBL. TOP PL. & INSTALL ON TRUSS VERT. - FASTEN w/ NAILS @ 6" O.C. PROVIDE 2x BLK @ EA. BAY AT TOP OF HEEL | LAP WALL SHTG. w/ DBL. TOP PL. & INSTALL ON TRUSS VERT. - FASTEN w/ NAILS @ 6" O.C. PROVIDE 2x BLK @ EA. BAY AT TOP OF HEEL* |
| WALL TO FOUNDATION | WALL SHTG. LAP w/ SILL PL. & FASTENED PER SHEAR WALL FASTENING SPEC. | |

* 2½"x0.113 IS AN ACCEPTABLE ALTERNATIVE TO A 3"x0.120", SAME SPACING OR NUMBER OF NAILS. (ONLY ACCEPTABLE WHERE * ARE SHOWN)

# VENEER LINTEL SCHEDULE

| SPAN (MAX) | HEIGHT OF VENEER ABOVE LINTEL | STEEL ANGLE SIZE |
|---|---|---|
| 3'-0" | 20 FT. MAX | L3"x3"x¼" |
| 6'-0" | 3 FT. MAX | L3"x3"x¼" |
| | 12 FT. MAX | L4"x3"x¼" |
| | 20 FT. MAX | L5"x3½"x5/16" |
| 8'-0" | 3 FT. MAX | L4"x4"x¼" * |
| | 12 FT. MAX | L5"x3½"x5/16" |
| | 16 FT. MAX | L6"x3½"x3/8" |
| 9'-6" | 12 FT. MAX | L6"x3½"x5/16" |
| 16'-0" | 2 FT. MAX | L7"x4"x½" ** |
| | 3 FT. MAX | L8"x4"x½" ** |

ALL LINTELS:
- SHALL SUPPORT 2 5/8" - 3 ½" VENEER w/ 40 psf MAXIMUM WEIGHT.
< 16' SHALL HAVE 4" MIN. BEARING
>= 16' SHALL HAVE 8" MIN. BEARING
< 16' SHALL NOT BE FASTENED BACK TO HEADER.
>= 16' SHALL BE FASTENED BACK TO WOOD HEADER IN WALL @48"o.c. w/ ½" DIA. x 3 ½" LONG LAG SCREWS IN 2" LONG VERTICALLY SLOTTED HOLES.
- MAX. VENEER HT. APPLIES TO ANY PORTION OF BRICK OVER THE OPENING.
- ALL LINTELS SHALL BE LONG LEG VERTICAL.
- WHEN SUPPORTING VENEER < 3" WIDE THE EXTERIOR TOE OF THE HORIZONTAL LEG MAY BE CUT IN THE FIELD TO BE 3 ¼" WIDE OVER THE BEARING LENGTH ONLY. THIS IS TO ALLOW FOR MORTAR JOINT FINISHING.
- SEE STRUCTURAL PLANS FOR ANY LINTEL CONDITION NOT ENCOMPASSED BY THE ABOVE PARAMETERS. FOR ANY LINTEL FASTENED BACK TO BEAM, FASTENERS SHALL MAINTAIN A 2½" (MINIMUM) CLEAR DISTANCE FROM BOT. OF BEAM.

* FOR QUEEN VENEER USE L4x3x¼".
** FOR 3½" VENEER ONLY. SEE PLAN FOR VENEER SUPPORT IF VENEER < 3½" THICK.

M&K STND. - MAY 2016

# NON-BEARING HEADER SCHEDULE

| SPAN | 2x4 NON-BEARING PARTITION WALL | 2x6 NON-BEARING PARTITION WALL |
|---|---|---|
| UP TO 3'-0" | (1)2x4 FLAT | (1)2x6 FLAT |
| UP TO 6'-0" | (2)2x4 | (3)2x4 |
| UP TO 8'-0" | (2)2x6 | (3)2x6 |
| UP TO 12'-0" | (2)2x10 | (2)2x10 |

# LEGEND

- INTERIOR BEARING WALL
- BEARING WALL ABOVE (B.W.A.) -AND/OR- SHEAR WALL ABOVE (S.W.A.)
- BEAM / HEADER
- EXTENT OF OVERFRAMING (O.F.)
- EXTENT OF TILE OVER FLOOR
- EXTENT OF BRACING PANELS/SHEARWALL w/ ADD'L CONNECTION REQUIREMENTS
- INDICATES HOLD-DOWN OR STRAP. REFER TO SCHEDULE.
- METAL HANGER
- INDICATES POST ABOVE (P.A.) PROVIDE SOLID BLOCKING UNDER POST OR JAMB ABOVE.

# MEANS & METHODS NOTES

THE STRUCTURE IS DESIGNED TO BE SELF SUPPORTING AND STABLE AFTER THE BUILDING IS FINISHED AND ALL PLAN, DETAIL, AND NOTE SPECIFICATIONS HAVE BEEN COMPLETED. IT IS THE CONTRACTOR'S SOLE RESPONSIBILITY TO DETERMINE THE ERECTION PROCEDURES AND SEQUENCE TO INSURE THE SAFETY OF THE BUILDING AND ITS COMPONENTS DURING CONSTRUCTION. THIS INCLUDES, BUT IS NOT LIMITED TO, THE ADDITION OF NECESSARY SHORING, SHEETING, TEMPORARY BRACING, GUYS, AND TIE-DOWNS. CONTRACTOR SHALL BE RESPONSIBLE FOR ALL SHORING AND BRACING REQUIRED TO STABILIZE AND PROTECT EXISTING AND ADJACENT STRUCTURES AND SYSTEMS DURING COURSE OF DEMOLITION AND CONSTRUCTION OF THE PROJECT.

STRUCTURAL DESIGN AND SPECIFICATIONS ASSUME THAT ALL SUPPORTING AND NON-SUPPORTING ELEMENTS IN CONTACT WITH FLOOR FRAMING ARE LEVEL, INCLUDING, BUT NOT LIMITED TO; FOUNDATIONS, SLABS ON GRADE, BEAMS, WALLS, AND NON-BEARING ELEMENTS. IT IS THE CONTRACTOR'S RESPONSIBILITY TO VERIFY LEVELNESS AND MAKE ADJUSTMENTS AS NECESSARY, INCLUDING CONSIDERATION OF THOSE AREAS THAT MAY BE WITHIN CONTRACTUAL, INDUSTRY, OR WARRANTY TOLERANCES.

# GENERAL STRUCTURAL NOTES

## FOUNDATION

- DESIGN IS BASED ON 2018 NORTH CAROLINA STATE RESIDENTIAL CODE.
- FOOTING DESIGN - 2,000 PSF ALLOWABLE SOIL BEARING PRESSURE IS ASSUMED. BUILDER/CONTRACTOR MUST VERIFY.
- FASTEN 2x4/6 SILL PLATES TO CONC. FND WITH A MINIMUM OF 2 ANCHORS PER PLATE, 12" MAX. FROM PLATE ENDS - UTILIZING:
  - 1/2" DIA. ANCHOR BOLTS @ 6'-0" O.C W/ 7" MIN. EMBEDMENT OR SIMPSON MASA ANCHORS @ 6'-0" O.C.
  - SIMPSON STRONG-BOLT 2 WEDGE ANCHOR (STB2-50700 - ½" Φ x 7") MAY BE USED IN PLACE OF ANCHOR BOLTS @ INTERIOR THICKENED SLABS ONLY.
- ALL LUMBER EXPOSED TO WEATHER OR IN CONTACT W/ PERIMETER FOUNDATION SHALL BE PRESERVATIVE TREATED SOUTHERN PINE #2.
- FOUNDATION WALLS & FOOTINGS SHALL BE PLAIN CONCRETE, U.N.O.
- CONCRETE DESIGN BASED ON ACI 318. CONCRETE SHALL ATTAIN THE FOLLOWING MIN. COMPRESSIVE STRENGTHS IN 28 DAYS, U.N.O.:
  f'c = FOUNDATION WALLS (SEE FOUNDATION DETAILS)
  2,500 psi: ....... FOOTINGS & INTERIOR SLABS ON GRADE
  3,000 psi: ....... GARAGE & EXTERIOR SLABS ON GRADE
  fy = 60,000 psi
- TYPICAL REINFORCEMENT DETAILS: PROVIDE 3" MIN. CLEAR COVER WHERE CAST AGAINST EARTH, 1 1/2" MIN. CLEAR COVER AGAINST FORMS. LAP ALL REBAR 48 BAR DIAMETERS MIN. (24" FOR #4 BARS) & BEND BARS AND LAP AT CORNERS. PROVIDE 6" HOOK INTO SUPPORTING FOOTINGS WHEN FOOTINGS INTERSECT.
- ALL CONCRETE EXPOSED TO THE WEATHER SHALL NOT HAVE LESS THAN 5% OR MORE THAN 7% AIR ENTRAINMENT.
- ALL FOOTINGS SHALL BEAR BELOW FROST LINE (TYP.) OR 12" MIN IN REGIONS WHERE CODE FROST DEPTH IS NOT APPLICABLE. CONSULT SOILS REPORT OR BUILDING DEPT. FOR MINIMUM DEPTH BELOW GRADE.
- FOOTINGS AND SLABS ON GRADE SHALL BEAR ON VIRGIN SOIL OR 95% COMPACTED FILL. (U.N.O.)
- PROVIDE CONTROL JOINTS AT ALL INSIDE CORNERS OF SLAB EDGES, AND OTHER LOCATIONS WHERE SLAB CRACKS ARE LIKELY TO DEVELOP.
  - JOINTS SHALL BE LOCATED @ 10'-0" O.C. (RECOMMENDED) OR 15'-0" O.C. (MAXIMUM)
  - JOINT GRID PATTERN SHALL BE AS CLOSE TO SQUARES AS POSSIBLE (1:1 RATIO), WITH A MAXIMUM OF 1:1.5 RATIO
  - CONTROL JOINTS SHALL NOT BE INSTALLED IN STRUCTURAL SLABS
- DIMENSIONS BY OTHERS, BUILDER TO VERIFY.
- BUILDER TO PROVIDE SUBTERRANEAN TERMITE PROTECTION MEETING THE REQUIREMENTS OF R318 OR LOCAL CODE REQUIREMENTS
- CRAWLSPACE/BASEMENT WALLS SHALL BE BRACED, PRIOR TO BACKFILLING, BY EITHER ADEQUATE TEMPORARY BRACING OR INSTALLATION OF FIRST FLOOR DECK.
- CRAWLSPACE/BASEMENT WALL DESIGN IS BASED ON BACKFILL SOIL CLASSIFICATIONS OF GW, GP, SW, SP (30 pcf) OR GM, GC, SM, SM-SC, ML (45 pcf). IF SC, ML-CL, OR CL (60 pcf) SOIL IS ENCOUNTERED ON SITE, CONTACT MULHERN & KULP FOR FURTHER EVALUATION OF FOUNDATION DESIGN.
- CONCRETE MASONRY UNITS (CMU) SHALL BE ASTM C90 WITH A MIN. COMPRESSIVE STRENGTH OF 1900 psi (F'm=1500 psi). MORTAR SHALL BE ASTM C270, TYPE S. CMU DESIGN PER TMS 402/602.
- CMU FOUNDATION WALLS SHALL HAVE 'DUR-O-WALL' HORIZONTAL JOINT REINFORCEMENT (OR EQUAL) - 9 GA. MINIMUM @ 16" O.C.
- PROVIDE 2x8 x 16" LONG P.T. PLATE ON TOP OF ALL CRAWL SPACE PIERS. TOP COURSE OF PIERS SHALL BE SOLID MASONRY OR FILLED SOLID.
- PROVIDE 2x6 P.T. PLATE ON INTERIOR CRAWL SPACE WALLS, FASTENED PER ANCHORAGE SPECIFICATION NOTED ABOVE.
- BASEMENT FOUNDATION WALL DESIGN BASED ON:
  - 9' OR 10' HEIGHT (SEE PLAN)
  - ACTUAL WALL WIDTHS ASSUMED FOR DESIGN, NOMINAL WIDTHS SHALL NOT BE USED.
- PROVIDE (2) #5 BARS AROUND ALL SIDES OF OPENINGS IN CONCRETE BSMT. FND. WALL WITH 2" CLEAR. REINFORCEMENT SHALL EXTEND 12" PAST CORNER OF OPENING IN ALL DIRECTIONS.
  - FOR OPENINGS UP TO 36", PROVIDE MINIMUM 10" CONCRETE DEPTH OVER OPENING OR (3)2x10 w/ (2)2x6 JACK STUDS, U.N.O.
  - LARGER OPENINGS SHALL BE PER PLAN.

MUNGO - MAY 2017

BEAM/HEADER SCHEDULE

| PLAN ID | BEAM/HEADER SIZE |
|---|---|
| B1 | (2)2x6 |
| B2 | (2)2x6 |
| B3 | (2)2x12 |

# EXTERIOR & SHEAR WALL SHEATHING SPECIFICATIONS

THIS MODEL HAS BEEN DESIGNED TO RESIST LATERAL FORCES RESULTING FROM:

115 MPH WIND IN 2018 NCSBC:RC

(115 MPH WIND SPEED IN ASCE 7-10 WIND MAP, PER NCSBC R301.2.1.1) EXP. B & SEISMIC CAT. A/B.

THE ENGINEERED DESIGN WAS COMPLETED PER 2015 IBC (SECTION 1609) & ASCE 7-10, AS PERMITTED BY R301.1.3 OF THE 2018 NCSBC.

DESIGN WIND UPLIFT LOADS HAVE BEEN CALCULATED UTILIZING ASCE 7-10 (ACCEPTED ENGINEERING PRACTICE) AS ALLOWED PER 2018 NCSBC:RC SECTION R802.11.1.1. THIS MODEL HAS BEEN DETAILED WHERE REQUIRED & ENGINEERED TO RESIST THE WIND UPLIFT LOAD PATH PER SECTIONS R602.3.5& R802.11.

## EXT. WALL SHEATHING SPECIFICATION

- 7/16" OSB OR 15/32" PLYWOOD: (P1)
  FASTEN SHEATHING w/ 2 3/8"x0.113 NAILS @ 6" O.C. AT EDGES & @ 12" O.C. IN THE PANEL FIELD. (TYP, U.N.O.)
- ALL SHEATHING PANELS SHALL BE ORIENTED VERTICALLY (LONG DIRECTION PARALLEL TO STUDS) AND INSTALLED FULL HEIGHT OF SHEAR WALL - OR- 2x HORIZONTAL BLOCKING SHALL BE PROVIDED TO SUPPORT ALL UNSUPPORTED PANEL EDGES & EDGE FASTENING.
- ALL EXT. WALLS SHALL BE CONTINUOUSLY SHEATHED AND ARE CONSIDERED SHEAR WALLS.

## 3" O.C. EDGE NAILING (P3)

- AT DESIGNATED AREAS - FASTEN PANEL EDGES OF WOOD STRUCTURAL WALL SHEATHING TO FRAMING w/ 2 3/8" x 0.113" NAILS @ 3" O.C. NO STAPLE ALTERNATIVE AVAILABLE AT THIS SPEC. ALL SHEATHING PANELS SHALL BE ORIENTED VERTICALLY (LONG DIRECTION PARALLEL TO STUDS) AND INSTALLED FULL HEIGHT OF SHEAR WALL - OR - 2x HORIZONTAL BLOCKING SHALL BE PROVIDED TO SUPPORT UNSUPPORTED PANEL EDGES AND 3" O.C. EDGE FASTENING.

## NOTES

- SEE CONNECTION SPECIFICATIONS CHART FOR STANDARD SHEAR TRANSFER DETAILING. IF ADDITIONAL CAPACITY IS REQUIRED BY DESIGN, IT WILL BE SPECIFICALLY NOTED ON PLAN.
- REFER TO DETAIL SHEET. "NUMBERED" DETAILS ARE REFERENCED ON PLAN.
- DESIGN ASSUMES 16" O.C MAX. STUD SPACING, U.N.O.
- DESIGN ASSUMES ALL INTERIOR SHEAR WALLS AND EXTERIOR WALLS ARE CONTINUOUS SHEATHED ABOVE AND BELOW OPENINGS.
- WHERE PANELS ARE APPLIED TO BOTH FACES OF WALL, PANEL JOINTS SHALL BE OFFSET TO FALL ON DIFFERENT FRAMING MEMBERS.
- ALL STRUCTURAL PANELS ARE TO BE DIRECTLY APPLIED TO STUD FRAMING.
- PRE-MANUFACTURED PANELIZED WALLS: FASTEN TOGETHER END STUDS OF WALL PANELS SHEATHED w/ OSB OR PLYWOOD AS FOLLOWS
  P1 SHEAR PANELS - 3" x 0.120" NAILS @ 6"o.c.
  P3 SHEAR PANELS - 3" x 0.120" NAILS @ 4"o.c.

INDICATES LOCATION AND EXTENT OF SHEARWALL WHICH REQUIRES SHEATHING AND/ OR FASTENING SPECIFICATIONS BEYOND THAT OF STANDARD CONSTRUCTION

MUNGO - MAY 2017

# GENERAL STRUCTURAL NOTES

## FLOOR FRAMING

- TRUSSES SHALL BE DESIGNED BY MANUF. TO MEET OR EXCEED L/480 LIVE LOAD DEFLECTION CRITERIA. (EXCLUDES STONE/MARBLE OR WET BED CONSTRUCTED FLOORS - CONTACT M&K FOR EXCLUDED FLOOR DESIGNS)
- PER THE GUIDELINES OF THE TILE COUNCIL OF NORTH AMERICA (TCNA HANDBOOK), IT SHALL BE THE FLOOR FINISH INSTALLER'S RESPONSIBILITY TO VERIFY THAT THE FINISHES TO BE INSTALLED MATCH THE DESIGN CRITERIA NOTED ABOVE (UNDER "DESIGN LOADS") .
- METAL HANGERS SHALL BE SPECIFIED BY MANUFACTURER, U.N.O.
- FLOOR SHEATHING SHALL BE 23/32" A.P.A. RATED 'STURD-I-FLOOR' 24" O.C., EXPOSURE 1 (OR APPROVED EQUAL) WITH TONGUE AND GROOVE EDGES. FASTEN TO FRAMING MEMBERS W/ GLUE AND:
  - 2 ½" x 0.131" NAILS @ 6"o.c. @ PANEL EDGES & @ 12"o.c. FIELD.
  - 2 3/8" x 0.120" NAILS @ 4" O.C. @ PANEL EDGES & @ 8" O.C. FIELD.
  - 2 3/8" x 0.113" NAILS @ 3" O.C. @ PANEL EDGES & @ 6" O.C. IN FIELD.
- PROVIDE 1 1/4" RIM BOARD @ ALL DECK LEDGER LOCATIONS. SEE PLANS OR DETAILS FOR LEDGER CONNECTION.

## ROOF FRAMING

- ROOF SHEATHING SHALL BE 7/16" A.P.A. RATED SHEATHING 24/16 EXPOSURE 1 (OR APPROVED EQUAL). FASTEN TO FRAMING MEMBERS
  - w/ 2 ½" x 0.131" NAILS @ 6" O.C. @ PANEL EDGES & @ 6" O.C. FIELD.
  - w/ 2 3/8" x 0.120" NAILS @ 4" O.C. @ PANEL EDGES & @ 6" O.C. FIELD.
  - w/ 2 3/8" x 0.113" NAILS @ 3" O.C. @ PANEL EDGES & @ 6" O.C. FIELD.
- WITHIN 48" OF ALL ROOF EDGES, RIDGES, & HIPS FASTEN ROOF SHEATHING FIELDS PER EDGE NAILING SPEC.
- FASTEN EACH ROOF TRUSS TO TOP PLATE W/ SIMPSON H2.5A HURRICANE CLIP (OR APPROVED EQUAL) @ ALL BEARING POINTS. CLIPS MUST BE INSTALLED ON EXTERIOR FACE OF EXTERIOR WALLS OR THE SAME SIDE AS THE SHEAR WALL SHEATHING.
- ALL ROOF GIRDER TRUSSES AND FLUSH BEAMS WITHIN THE ROOF SYSTEM SHALL BE FASTENED TO THE DOUBLE TOP PLATES AND POST SUPPORT w/ (2) SIMPSON H2.5A CLIPS OR APPR. EQUAL (TYP. U.N.O. ON PLANS)
- TRUSS ALL VALLEY SETS. FASTEN TO TRUSS BELOW w/ SIMPSON H2.5A TIES AT EACH END AND AT EACH TRUSS BETWEEN.
- METAL HANGERS SHALL BE SPECIFIED BY THE MANUFACTURER, U.N.O.
- ERECT AND INSTALL ROOF TRUSSES PER WTCA & TPI'S BCSI 1 "GUIDE TO GOOD PRACTICE FOR HANDLING, INSTALLING & BRACING OF METAL PLATE CONNECTED WOOD TRUSSES."
- SUPPORT SHORT SPAN ROOF TRUSSES w/ 2x4 LEDGER FASTENED TO FRAMING w/(2) 3" x 0.120" NAILS @ 16" O.C. (UP TO 7' SPAN).

MUNGO - MAY 2017

# ADDITIONAL NOTES FOR TRUSS & I-JOIST MANUFACTURER

ROOF TRUSS, FLOOR TRUSS AND ENGINEERED JOISTS SHALL BE DESIGNED TO MEET THE DIFFERENTIAL DEFLECTION CRITERIA BELOW, UNLESS NOTED OTHERWISE ON PLAN.

TRUSSES/JOISTS SHALL BE DESIGNED SO THAT DIFFERENTIAL DEFLECTION BETWEEN ADJACENT PARALLEL TRUSSES/JOISTS OR GIRDER TRUSSES/FLUSH BEAMS DO NOT EXCEED THE FOLLOWING:

A. ROOF TRUSSES: 1/4" DEAD LOAD
B. FLOOR TRUSSES, ATTIC TRUSSES, & I-JOISTS: 1/8" DEAD LOAD
C. FLOOR TRUSSES & ATTIC TRUSSES ADJACENT TO FLOOR FRAMING BY OTHERS: LIMIT ABSOLUTE TRUSS DEFLECTION TO 3/16" DEAD LOAD. (NOT DIFFERENTIAL DEFLECTION)

# LIST OF ABBREVIATIONS

| | | | |
|---|---|---|---|
| B.F. | BALLOON-FRAMED | HDR | HEADER |
| BM. | BEAM | INT. | INTERIOR |
| BOT. | BOTTOM | J | JACK STUD |
| BRG. | BEARING | J.T. | JACK TRUSS |
| B.W.A. | BEARING WALL ABOVE | K | KING STUD |
| CANT'D | CANTILEVERED | MANUF. | MANUFACTURER |
| CONC. | CONCRETE | MAX. | MAXIMUM |
| CONT. | CONTINUOUS | MIN. | MINIMUM |
| DBL. | DOUBLE | N.T.S | NOT TO SCALE |
| DIM. | DIMENSION | OPT. | OPTIONAL |
| D.J. | DECK JOISTS | P.A. | POST ABOVE |
| EA. | EACH | P.T. | PRESSURE TREATED |
| EQ. | EQUAL | PKT | POCKET |
| EXT. | EXTERIOR | REQ'D | REQUIRED |
| E.W. | EACH WAY | R.T. | ROOF TRUSS |
| F.T. | FLOOR TRUSS | SCHED. | SCHEDULE |
| FND. | FOUNDATION | SIM. | SIMILAR |
| FTG. | FOOTING | STRUCT. | STRUCTURAL |
| G.T. | GIRDER TRUSS | T.O.F | TOP OF FOOTING |
| HD | HOLDOWN | TYP. | TYPICAL |

# GENERAL STRUCTURAL NOTES

- DESIGN IS BASED ON 2018 NORTH CAROLINA STATE RESIDENTIAL CODE.
- WOOD FRAME ENGINEERING IS BASED ON NDS, "NATIONAL DESIGN SPECIFICATION FOR WOOD CONSTRUCTION" - LATEST EDITION.
- MODEL IS CONSIDERED AS "FULLY ENCLOSED". OPENING PROTECTION PER BUILDER (MINIMUM STRUCTURAL PANELS PER CODE)
- DESIGN LOADS:
  ROOF: LIVE = 20 PSF, DEAD = 17 PSF; ATTIC= 20 PSF AT HT. > 42"; LOAD DURATION FACTOR = 1.25
  FLOOR: LIVE = 40 PSF (30 PSF AT SLEEPING AREAS); DEAD= 15 PSF (10 PSF T.C., 5 PSF B.C.) (TRUSSES) = 10 PSF (I-JOISTS/SAWN) (ADD'L 10 PSF AT TILE)
  WIND: ≤115 MPH, EXPOSURE B
  SEISMIC: DESIGN CATEGORY A/B

## GENERAL FRAMING

- ALL TYP. NAIL FASTENER REQUIREMENTS ARE NOTED IN STANDARD CONNECTIONS TABLE (IRC TABLE R602.3(1)) OR ON PLANS. ALL NAILS SPECIFIED ARE MIN DIAMETER AND LENGTH REQUIRED FOR CONNECTION. ALL HANGER NAILS SHALL BE INSTALLED PER MANUFACTURER'S REQUIREMENTS FOR MAX CHARTED CAPACITY. NOTE: HANGERS USE COMMON NAIL DIAMETERS NOT TYPICAL FRAMING GUN NAILS.
- EXT. & INT. BRG./SHEAR WALLS SHALL BE 2x4 OR 2x6 (AS SHOWN ON PLANS) @ 16" O.C. SPF/SP STUD GRADE LUMBER, OR BETTER, U.N.O..
  - WALLS OVER 12' TALL SHALL BE PER PLAN.
- ALL INTERIOR BEARING WALLS ARE ASSUMED TO BE SHEATHED w/ GYP WALL BOARD (ONE SIDE MIN.) OR PROVIDE MID HT. BLOCKING.
- ALL HEADERS, BEAMS & OTHER STRUCTURAL MEMBERS SHALL BE SPRUCE-PINE-FIR #2 (SPF) OR SOUTHERN PINE #2 (SP) LUMBER, OR BETTER. SUPPORT ALL HEADERS/ BEAMS W/ (1)2x JACK STUD & (1)2x KING STUD, MINIMUM.
  - THE NUMBER OF STUDS SPECIFIED AT A SUPPORT INDICATES THE NUMBER OF JACK STUDS REQUIRED, U.N.O..
- ALL NON-BEARING INTERIOR STUD WALLS SHALL BE CONSTRUCTED WITH 2x 'STUD' GRADE MEMBERS SPACED @ 24" O.C. (MAX., U.N.O.)
  - SEE "NON-BEARING HEADER SCHEDULE" HEADER SIZES IN NON-LOAD BEARING WALLS
- ALL FRAMING LUMBER SHALL BE DRIED TO 15% MC (KD-15).
- ENGINEERED LUMBER BEAMS TO MEET OR EXCEED THE FOLLOWING:
  - 'LVL' - Fb=2600 psi; Fv=285 psi; E=2.0x10^6 psi
- ENGINEERED LUMBER POSTS TO MEET OR EXCEED THE FOLLOWING:
  - 'LVL' - Fb=2400 psi; Fc‖=2500 psi; E=1.8x10^6 psi
- FOR 2 & 3 PLY BEAMS OF EQUAL 1¾" MAX. WIDTH, FASTEN PLIES TOGETHER WITH 3 ROWS OF 3"x0.120" NAILS @ 8" O/C OR 2 ROWS ¼"x3½" SIMPSON SDS SCREWS (OR 3½" TRUSSLOK SCREWS) @ 16" O/C. ALT. FASTENING SPEC FOR 3 PLY BEAMS ONLY: FASTEN PLIES TOGETHER WITH 2 ROWS OF ½" DIA. THRU BOLTS @ 16" O.C. USE A MINIMUM OF 4 ROWS (NAILS/SCREWS) OR 3 ROWS (BOLTS) FOR BEAM DEPTHS OF 14" OR GREATER. APPLY NAIL/SCREW FASTENING AT BOTH FACES FOR 3-PLY CONDITION. LOCATE TOP & BOTTOM FASTENERS 2" FROM EDGE. SOLID 3 ½" OR 5 ¼" BEAMS ARE ACCEPTABLE. USE 2 ROWS OF NAILS FOR 2x6 & 2x8 MEMBERS.
- FOR 4 PLY BEAMS OF EQUAL 1¾" MAX. WIDTH, FASTEN PLIES TOGETHER WITH 3 ROWS OF ¼"x6" SIMPSON SDS SCREWS (OR 6 ¾" TRUSSLOK SCREWS) @ 16" O/C OR 2 ROWS OF ½" DIA. THRU BOLTS @ 16" O.C. USE A MINIMUM OF 4 ROWS (SCREWS) OR 3 ROWS (BOLTS) FOR BEAM DEPTHS OF 14" OR GREATER. APPLY SCREW FASTENING AT BOTH FACES (ONE SIDE ONLY FOR TRUSSLOK SCREWS). LOCATE TOP AND BOTTOM FASTENERS 2" FROM EDGE. A SOLID 7" BEAM IS ACCEPTABLE.
- REFER TO IRC FASTENING SCHEDULE TABLE R602.3(1) FOR ALL CONNECTIONS, TYP. U.N.O.
- FASTEN ALL METAL CONNECTORS (I.E. HANGERS, CLIPS, ETC) PER MANUFACTURER'S SPECIFICATIONS FOR MAXIMUM TABLE LOAD VALUE U.N.O.
- PROVIDE SOLID BLOCKING IN FLOOR SYSTEM UNDER ALL POSTS CONTINUOUS TO FND./BEARING. BLOCKING TO MATCH POST ABOVE.
- CORROSION NOTES:
  - BUILDER RESPONSIBLE TO DETERMINE CORROSION-RESISTANCE REQUIREMENTS AND COMPATIBILITY OF HARDWARE, FASTENERS AND CONNECTORS FOR ENVIRONMENTAL EXPOSURE AND IN CONTACT W/ PRESERVATIVE-TREATED WOOD OF ACTUAL FINAL CONDITIONS AND SOURCED MATERIALS. CONTACT LUMBER & HARDWARE SUPPLIERS TO COORD.
- BASEMENT INTERIOR BEARING WALLS & EXTERIOR WALK-OUT BASEMENT WALLS SHALL BE 2x6 @ 16" O.C. SPF OR SYP, "STUD" GRADE OR BETTER.
- M+K SHALL NOT BE RESPONSIBLE FOR ANY ISSUES RESULTING FROM OR RELATED TO ANY DELEGATED ENGINEERED COMPONENTS IF THE OWNER DOES NOT SUBMIT THE COMPONENT SHOP DRAWINGS TO M+K FOR A CONFORMANCE REVIEW PRIOR TO FABRICATION, DELIVERY, OR INSTALLATION.

MUNGO - MAY 2017

seal:

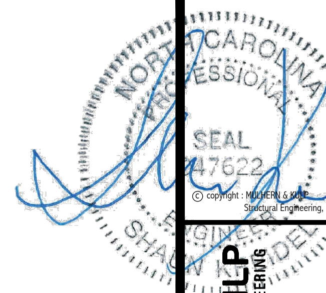


© copyright : MULHERN & KULP Structural Engineering, Inc.


MULHERN+KULP
RESIDENTIAL STRUCTURAL ENGINEERING
300 Brookside Ave, Building 4 ▸ Ambler, PA 19002
p 215-646-8001 ▸ mulhernkulp.com
NC License # C-3825


M&K project number: 192-17017

project mgr: SMK
drawn by: JPP
issue date: 09-04-20

REVISIONS:
date: initial:

ARCH: v.01.01.00.00

MUNGO HOMES

GENERAL STRUCTURAL NOTES
TELFAIR
WIND SPEED < 115 MPH NORTH CAROLINA

sheet: S0.0

MULHERN+KULP
RESIDENTIAL STRUCTURAL ENGINEERING

3655 Brookside Parkway, Suite 250 ▸ Alpharetta, GA 30022
p 770-777-0074 ▸ *mulhernkulp.com*

June 19, 2025

Benito Carreon
**MUNGO HOMES**
2521 Schieffelin Rd #116
Apex NC 27502

# CAMBRIDGE, LANGDON, LEANDER LEE AND OLIVET COMMUNITIES

Russell Model (192-19039), Telfair Model (192-17017), McDowell Model (192-17012), Meriwether (192-17013), Rutherford Model (192-17016), & Turner Model (192-19040)

**PORTAL FRAME EVALUATION (120 MPH MAX WIND SPEED)**

M+K Project #: 192-25000

*References*

*Structural drawings, provided by Mulhern + Kulp*

Benito:

Pursuant to your request, we have prepared this letter to address concerns with regard to portal frame requirements for the above referenced models being built in the above mentioned communities. The structural plans specify that portal frames are to be constructed where indicated on plan with a 2'-3" maximum pony wall height atop the portal frame header. In addition (2) Simpson CS16 strap ties are to be fastened from the portal frame jack studs to the pony wall studs above. It has been reported in the field that a few portal frames have been constructed with pony walls exceeding the plan specified maximum height. Each portal frame exceeding the 2'-3" maximum pony wall height requires additional reinforcement.

To provide additional reinforcement at 2x4 stud framed portal frames, (1) additional Simpson CS16 strap shall be installed adjacent to each pair of existing/plan specified straps at the inside face of wall for a total of (3) straps on each side of the opening. The additional strap shall have the same length and fastening requirements as the straps specified in the portal frame detail. Where not already present, studs above and below the header shall be added and fastened to the existing stud packs for strap installation. For 2x6 stud framed portal frames, no additional strapping is required. Please note, this applies to portal frames with a maximum wall height from top of foundation to top of double top plate less than or equal to 12'-0".

Please feel free to call if you have any questions.

---

Respectfully,

**MULHERN & KULP STRUCTURAL ENGINEERING, INC.**

Matthew Fowler, *Project Engineer I*

Shaun Kreidel, P.E. *Associate Owner & Atlanta Office Director*

NORTH CAROLINA PROFESSIONAL SEAL 047622 ENGINEER SHAUN KREIDEL

*Signature + Seal* *06/19/2025*

MULHERN+KULP
RESIDENTIAL STRUCTURAL ENGINEERING

3655 Brookside Parkway, Suite 250 ▸ Alpharetta, GA 30022
p 770-777-0074 ▸ *mulhernkulp.com*

June 6, 2025

Damon Banfield
**MUNGO HOMES**
447 Western Lane
Irmo, SC 29063

# NON-BEARING INTERIOR WALL STUD SPACING REQUIREMENTS

**M+K Project #: 192-25000**

***Reference***
*Structural Plans, prepared by Mulhern & Kulp*

Damon,

Pursuant to your request, we have prepared this letter to address non-bearing interior wall stud spacing requirements for structural plans designed by Mulhern + Kulp for Mungo Homes. Sheet S0.0 of the structural plans may specify that all non-bearing interior stud walls be constructed with 2x studs at 16" o.c. (maximum). You have requested if non-bearing interior stud walls could be spaced at 24" o.c.

**All non-bearing interior stud walls are permitted to be constructed at 24" o.c. (maximum). Please note, this does not include interior shear walls, shear walls are to be constructed at 16" o.c. (maximum) unless noted otherwise on plan.**

**Please feel free to call if you have any questions.**

---

Respectfully,

**MULHERN & KULP STRUCTURAL ENGINEERING, INC.**

**NC Firm License #: C-3825**

**Matthew Fowler** *Project Engineer*

**Shaun Kreidel, P.E.** *Associate Owner + Atlanta Office Director*

*Signature + Seal* *06/06/2025*

DIMENSIONS REFLECT FACE OF WALL STUDS ABOVE OR CENTERLINES OF CRAWLSPACE PIERS (REFER TO DETAILS FOR FOUNDATION WALL PLACEMENT RELATIVE TO WALL FRAMING ABOVE

FOUNDATION HARDWARE SCHEDULE
ELEVATION B

| QTY | PRODUCT |
|---|---|
| 15 | SIMPSON STRONG BOLT 2 ANCHORS |

HARDWARE NOTES:
- ALL NAIL HOLES FILLED
- ALL COUNTS ESTIMATED
- 15 ADDITIONAL STRONG BOLT 2 ANCHORS INCLUDED FOR MISSED ANCHOR BOLTS

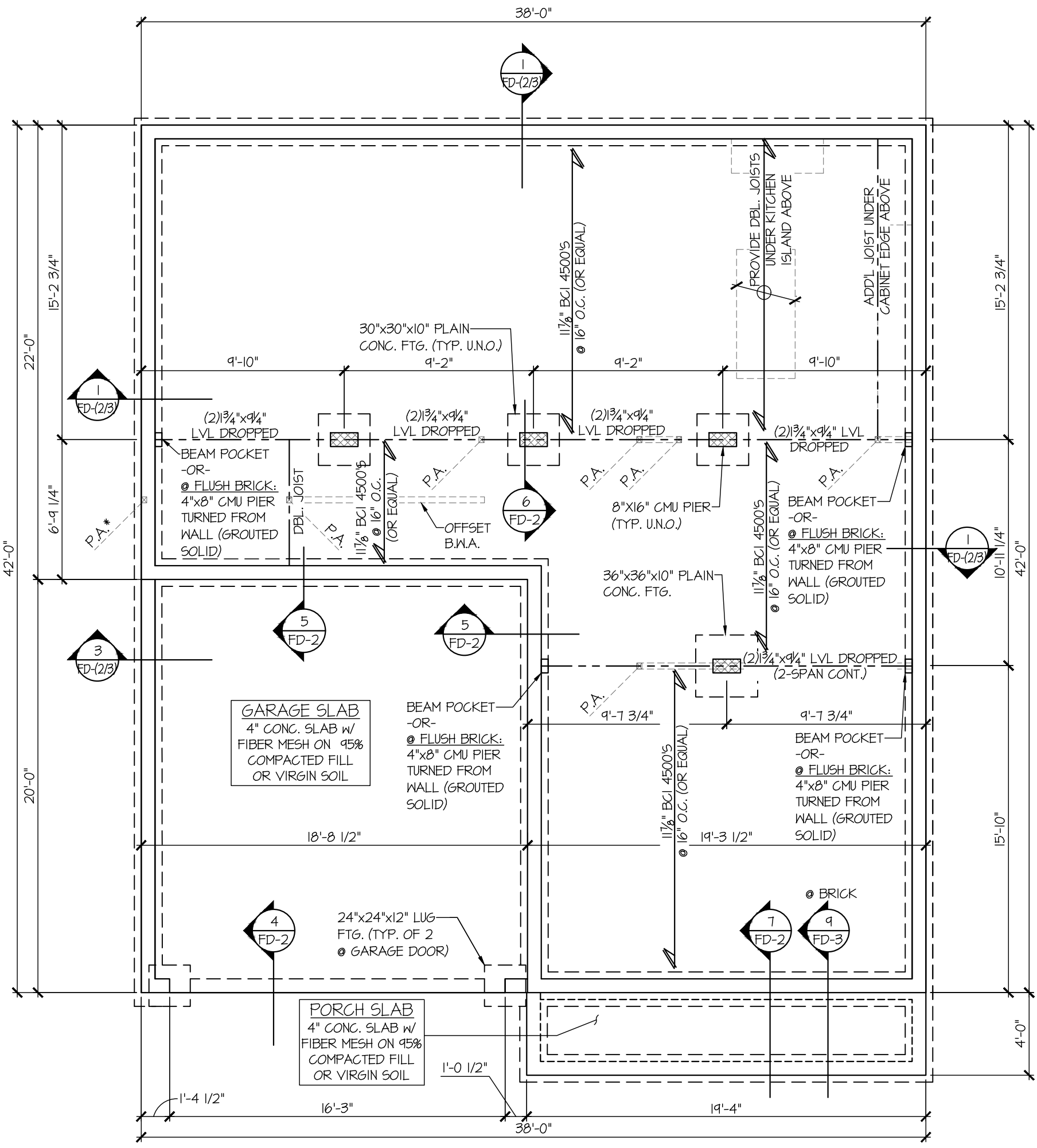


## 1 CRAWLSPACE FOUNDATION PLAN

SCALE: 3/16"=1'-0" ELEV. B

REFER TO S-0.0 FOR TYPICAL STRUCTURAL NOTES & SCHEDULES

3/27/25

sheet: SC1.1M

# RAISED FOUNDATION PLAN

TELFAIR
ELEVATION B
WIND SPEED < 115 MPH NORTH CAROLINA

MUNGO HOMES

ARCH: v.01.00.00

REVISIONS:
date: initial:

project mgr: SMK
drawn by: JPP
issue date: 09-04-20

M&K project number: 192-17017

MULHERN+KULP
RESIDENTIAL STRUCTURAL ENGINEERING
300 Brookside Ave, Building 4 ▸ Ambler, PA 19002
p 215-646-8001 ▸ mulhern@kulp.com
NC License # C-3825

seal:

© copyright Mulhern+Kulp structural engineering, inc.

| 2ND FLOOR HARDWARE SCHEDULE ELEVATION B | |
|---|---|
| QTY | PRODUCT |
| 4 | SIMPSON CS16 STRAP (26"/STRAP) |
| 1 | SIMPSON L90 CLIP |
| 24 | SIMPSON H2.5A CLIP |
| 3 | SIMPSON HD3B HOLDOWN |
| 3 | SIMPSON CMST14 STRAP |

HARDWARE NOTES:
- ALL NAIL HOLES FILLED
- ALL COUNTS ESTIMATED
- HARDWARE COUNT DOES NOT INCLUDE TRUSS TO TRUSS CONNECTIONS

| BEAM/HEADER SCHEDULE | |
|---|---|
| PLAN ID | BEAM/HEADER SIZE |
| B1 | (2)2x6 |
| B2 | (2)2x6 |
| B3 | (2)2x12 |

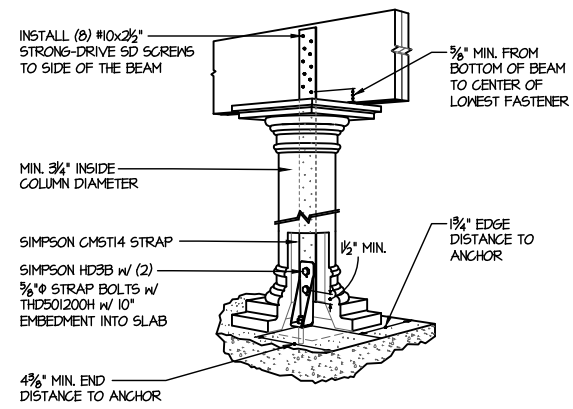


A HOLLOW STRUCTURAL COLUMN UPLIFT DETAIL
NOT TO SCALE - AS REQUIRED

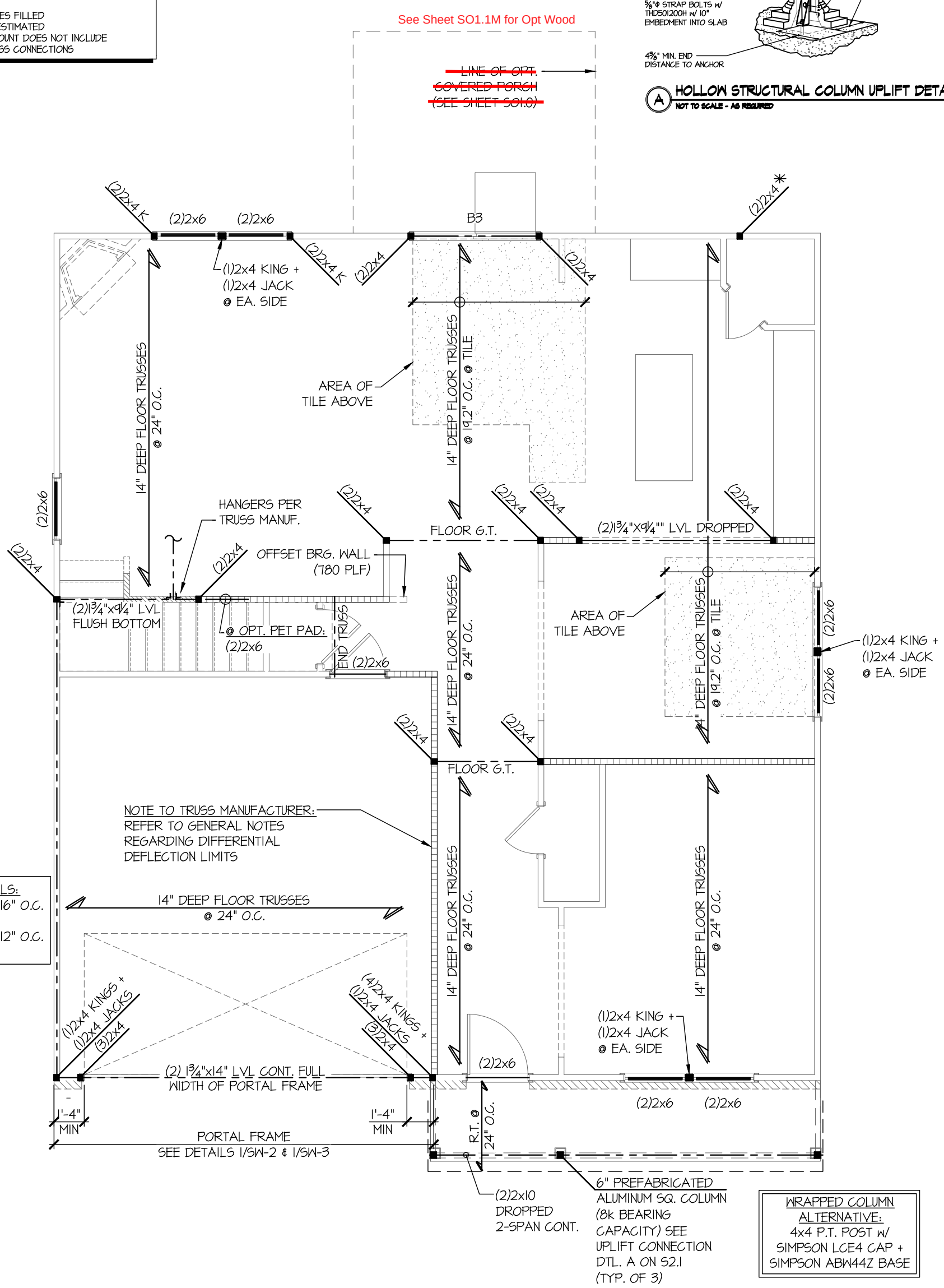


WRAPPED COLUMN ALTERNATIVE:
4x4 P.T. POST w/ SIMPSON LCE4 CAP + SIMPSON ABW44Z BASE

1 2ND FLOOR FRAMING PLAN
SCALE: 3/16"=1'-0" ELEV. B
(1ST FLOOR WALLS SHOWN)

PLAN DESIGNED FOR 8' -OR- 9' PLATE HEIGHT

REFER TO S-0.0 FOR TYPICAL STRUCTURAL NOTES & SCHEDULES

3/27/25

sheet: S2.1M

2ND FLOOR FRAMING PLAN
TELFAIR
ELEVATION B
WIND SPEED < 115 MPH NORTH CAROLINA

MUNGO HOMES

ARCH: v:01.01.00.00

REVISIONS:
date: initial:

project mgr: SMK
drawn by: JPP
issue date: 09-04-20

M&K project number: 192-17017

MULHERN+KULP
RESIDENTIAL STRUCTURAL ENGINEERING
300 Brookside Ave, Building 4 ▸ Ambler, PA 19002
p 215-646-8001 ▸ mulhern+kulp.com
NC License # C-3825

seal:
NORTH CAROLINA PROFESSIONAL SEAL 17622 ENGINEER SHANE K. MULHERN
© copyright: Mulhern & Kulp Structural Engineering, Inc.

| ROOF HARDWARE SCHEDULE ELEVATION B | |
|---|---|
| QTY | PRODUCT |
| 67 | SIMPSON H2.5A CLIP |
| 2 | SIMPSON CS16 STRAP (24"/STRAP) |

HARDWARE NOTES:
- ALL NAIL HOLES FILLED
- ALL COUNTS ESTIMATED
- HARDWARE COUNT DOES NOT INCLUDE TRUSS TO TRUSS CONNECTIONS

| BEAM/HEADER SCHEDULE | |
|---|---|
| PLAN ID | BEAM/HEADER SIZE |
| B1 | (2)2x6 |
| B2 | (2)2x6 |
| B3 | (2)2x12 |

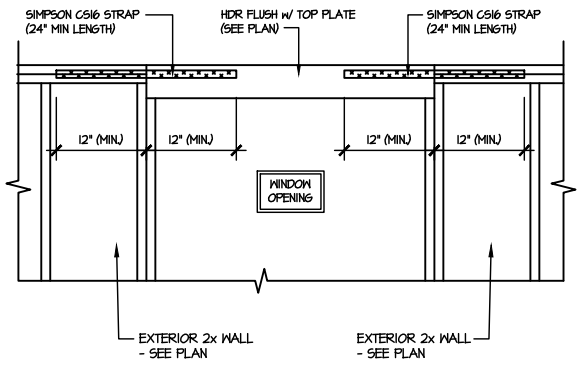


A SHEAR TRANSFER DETAIL AT UPSET WINDOW
SCALE: 3/8"=1'-0"

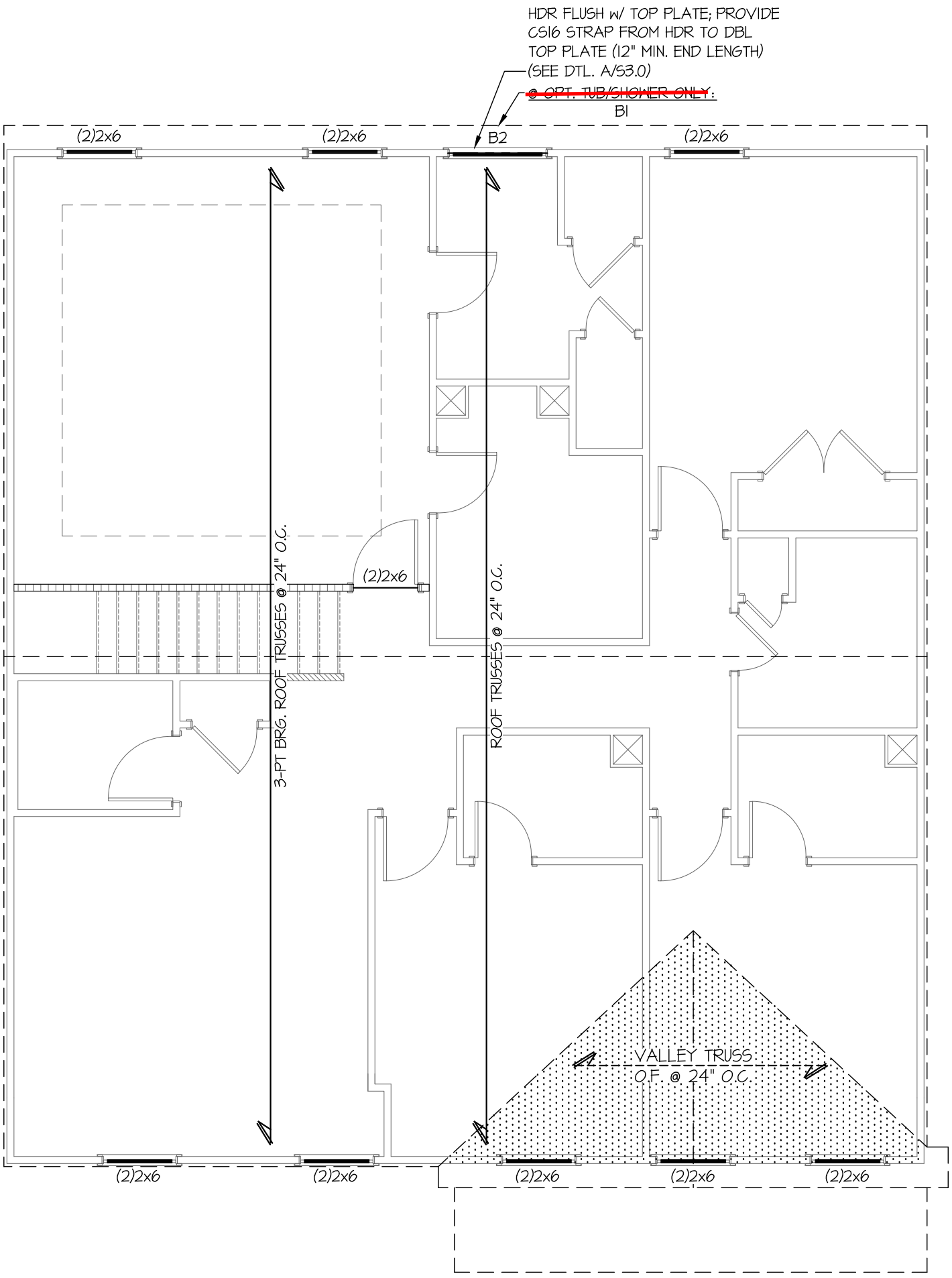


1 ROOF FRAMING PLAN
SCALE: 3/16"=1'-0"
(2ND FLOOR WALLS SHOWN)
ELEV. B

PLAN DESIGNED FOR 8' PLATE HEIGHT

REFER TO S-0.0 FOR TYPICAL STRUCTURAL NOTES & SCHEDULES

3/27/25

sheet: S3.1M

# ROOF FRAMING PLAN

TELFAIR
ELEVATION B
WIND SPEED < 115 MPH NORTH CAROLINA

MUNGO HOMES

ARCH: v.01.01.00.00

RE/VISIONS:
date: initial:

project mgr: SMK
drawn by: JPP
issue date: 09-04-20

M&K project number: 192-17017

MULHERN+KULP
RESIDENTIAL STRUCTURAL ENGINEERING
300 Brookside Ave, Building 4 ▸ Ambler, PA 19002
p 215-646-8001 ▸ mulhernkulp.com
NC License # C-3825

seal:

© copyright: MULHERN+KULP Structural Engineering, Inc.

| ADD'L HARDWARE SCHEDULE FOR OPT. WOOD DECK | |
|---|---|
| QTY | PRODUCT |
| 24 | SIMPSON U210 HANGER |
| 3 | SIMPSON LCE4 POST CAP |
| 3 | SIMPSON ABW44Z POST BASE |
| 4 | SIMPSON H3 CLIP |
| 2 | SIMPSON BCS2-2/4 POST BASE |

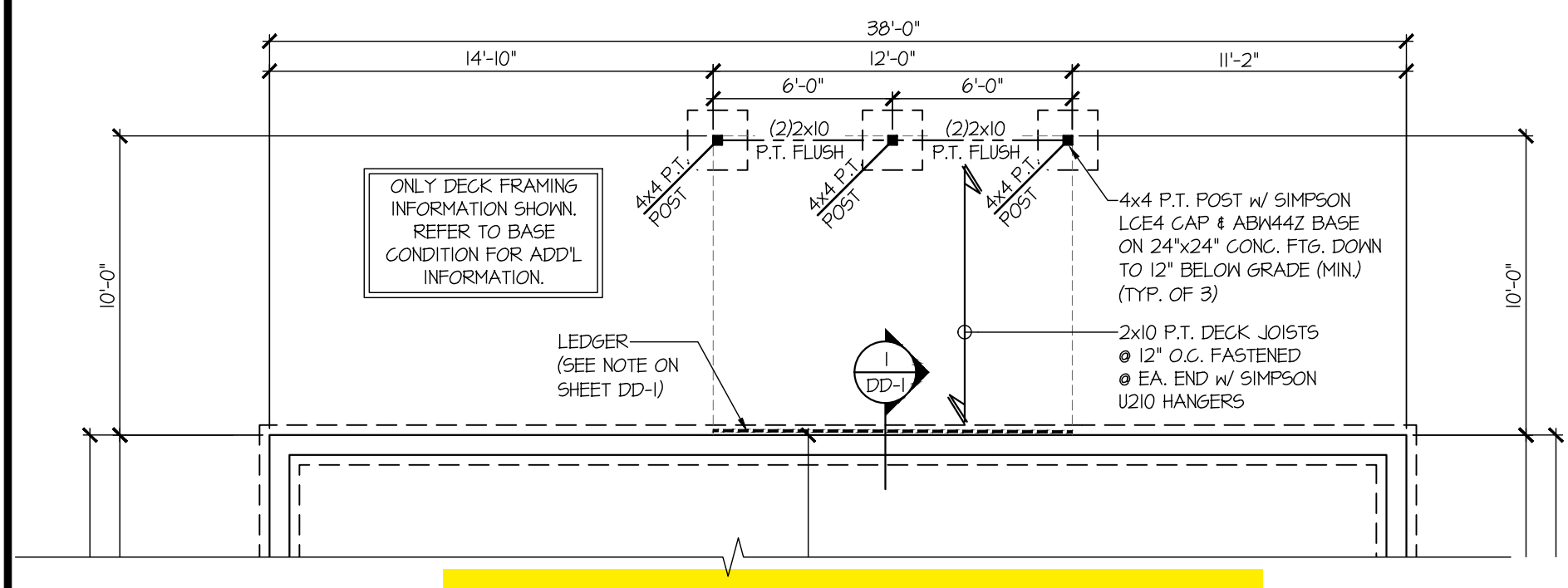


## PARTIAL CRAWLSPACE FOUNDATION PLAN
## OPT. WOOD DECK

1

SCALE: 3/16"=1'-0"

ALL ELEVS. SIM.

REFER TO S-0.0 FOR TYPICAL STRUCTURAL NOTES & SCHEDULES

3/27/25

sheet: S01.1M

OPTION FRAMING PLANS

TELFAIR

COVERED PORCH

WIND SPEED < 115 MPH NORTH CAROLINA

MUNGO HOMES

ARCH v.01.01.00.00

REVISIONS:

date: initial:

project mgr: SMK

drawn by: JPP

issue date: 09-04-20

M&K project number: 192-17017

MULHERN+KULP
RESIDENTIAL STRUCTURAL ENGINEERING
300 Brookside Ave, Building 4 ▸ Ambler, PA 19002
p 215-646-8001 ▸ mulhernkulp.com
NC License # C-3825

seal:

© copyright - Mulhern+Kulp Structural Engineering, Inc.

3/27/25

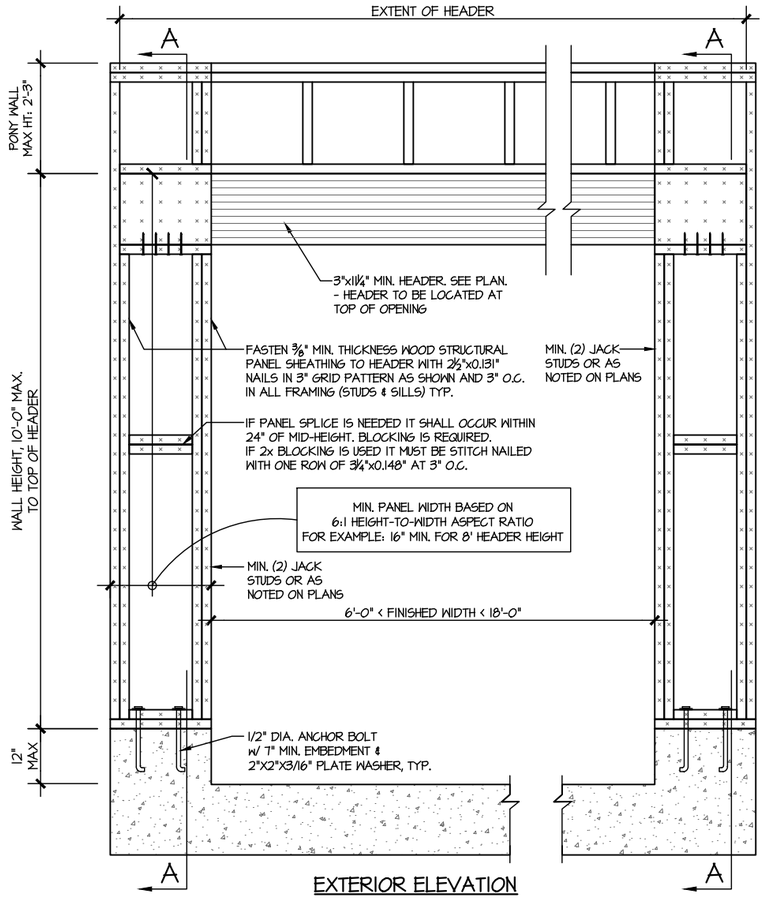


EXTERIOR ELEVATION

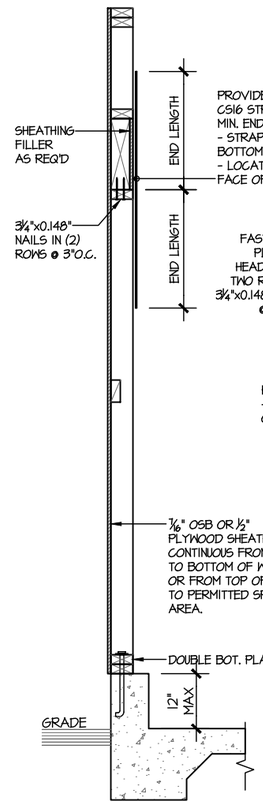


SECTION A-A THROUGH PIER

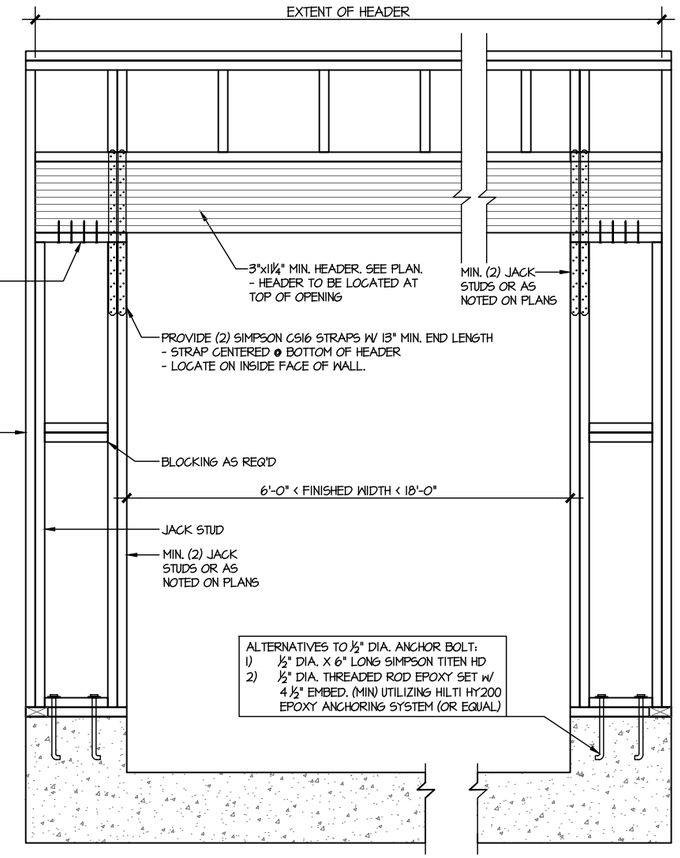


INTERIOR ELEVATION

WALL FRAMING SPECIFICATION:
@ 2x4 WALL: USE SP/SPF #2 GRADE STUDS (OR BETTER)
@ 2x6 WALL: USE SP/SPF #2 GRADE STUDS (OR BETTER)

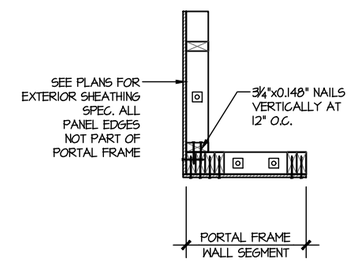


PLAN VIEW OF CORNER DETAIL

MONOSLAB FOUNDATION

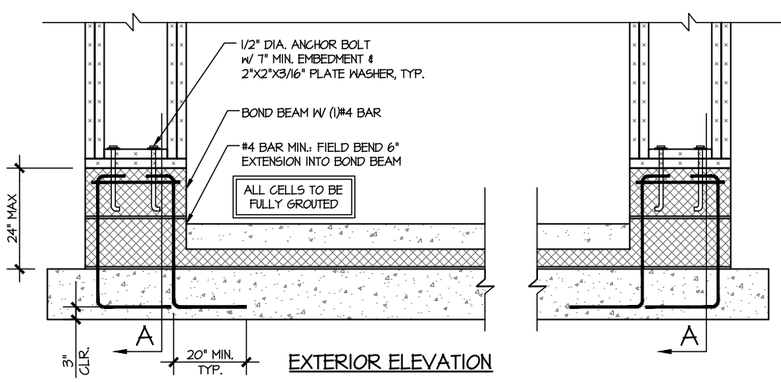


EXTERIOR ELEVATION

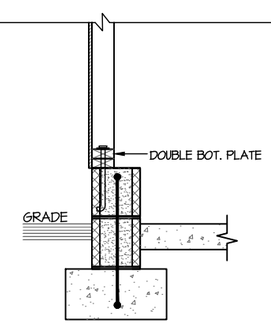


SECTION A-A THROUGH PIER

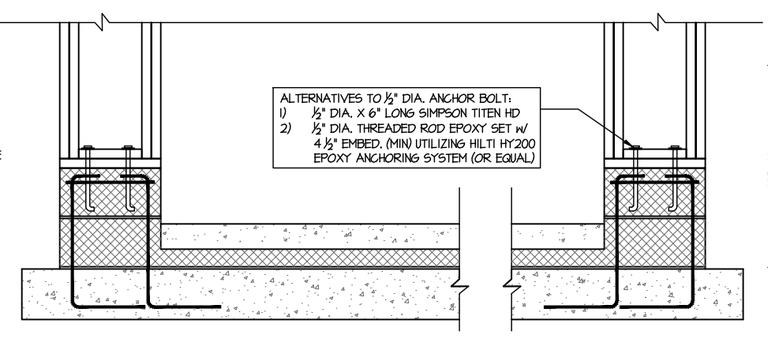


INTERIOR ELEVATION

RAISED SLAB FOUNDATION

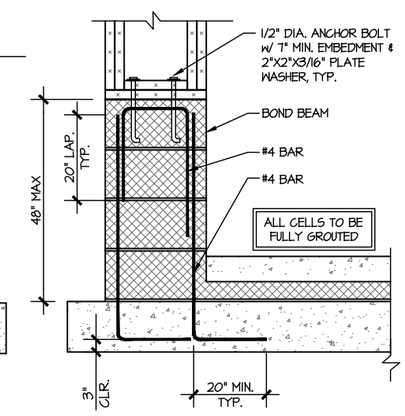


STEM ≤ 48" TALL

## 1 PORTAL FRAME DETAIL

SCALE: N.T.S.

BOTH SIDES OF GARAGE DOOR
1 KING STUD & RETURN WALLS

seal:

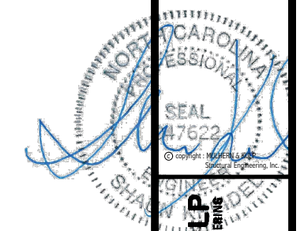


© copyright : MULHERN+KURP Structural Engineering, Inc.

MULHERN+KURP
RESIDENTIAL STRUCTURAL ENGINEERING
3320 Brookside Ave, Building 4 • Ambler, PA 19002
p:215-646-5005 • mulhernkurp.com
NC License # C-3825

M&K project number: 192-17017

project mgr: SMK
drawn by: JPP
issue date: 09-04-20

REVISIONS:
date: initial:

ARCH: v.01.01.00.00

MUNGO HOMES

STRUCTURAL DETAILS

TELFAIR

WIND SPEED < 115 MPH NORTH CAROLINA

sheet: SW-2

3/27/25

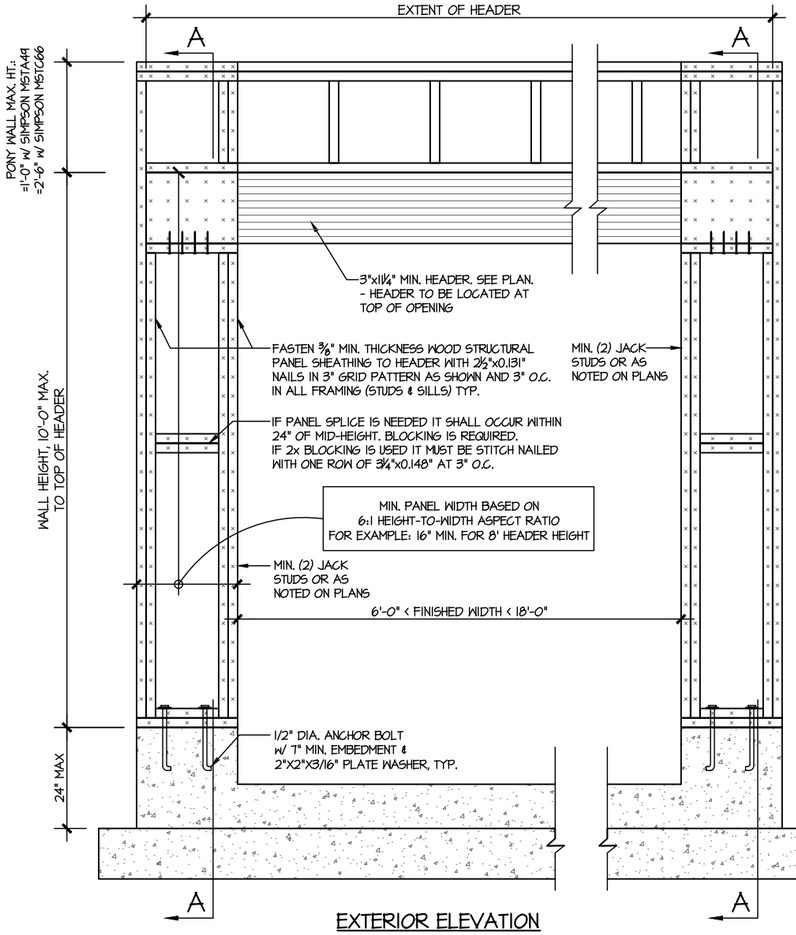


EXTERIOR ELEVATION

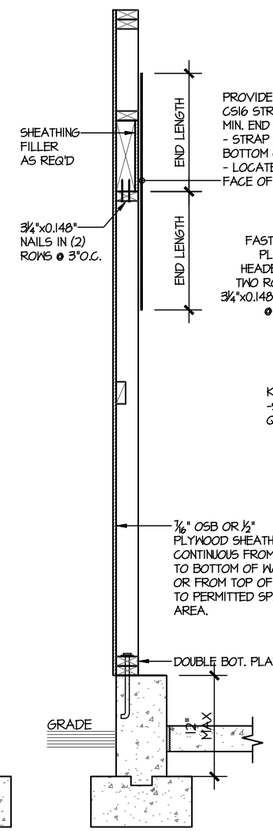


SECTION A-A
THROUGH PIER

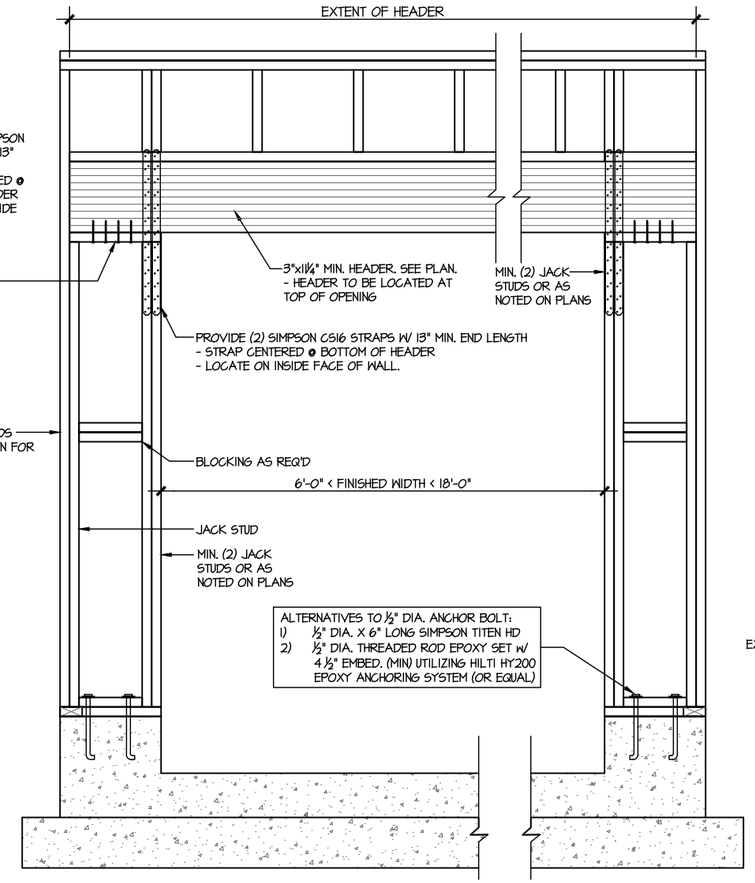


INTERIOR ELEVATION

WALL FRAMING SPECIFICATION:
@ 2x4 WALL: USE SP/SPF #2 GRADE STUDS (OR BETTER)
@ 2x6 WALL: USE SP/SPF #2 GRADE STUDS (OR BETTER)

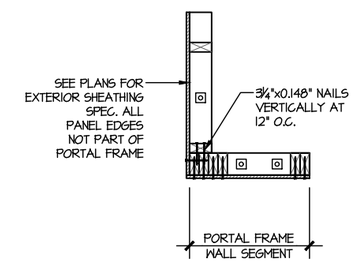


PLAN VIEW OF
CORNER DETAIL

BASEMENT FOUNDATION

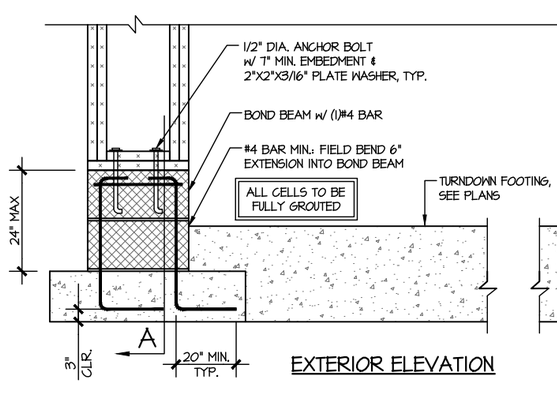


EXTERIOR ELEVATION

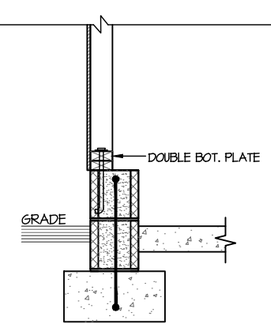


SECTION A-A
THROUGH PIER

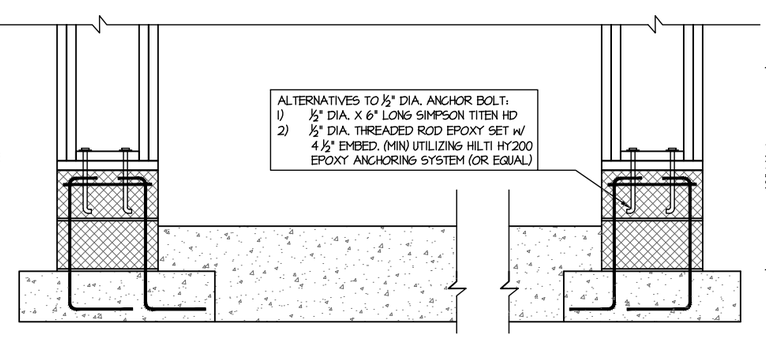


INTERIOR ELEVATION

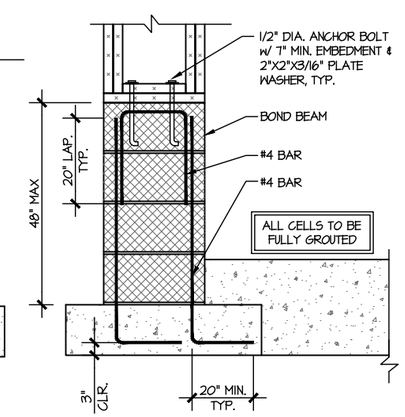


STEM HEIGHT >
24" & ≤ 48"
TALL

CRAWLSPACE FOUNDATION

## 1 PORTAL FRAME DETAIL

SCALE: N.T.S.

BOTH SIDES OF GARAGE DOOR
1 KING STUD & RETURN WALLS

seal:

NORTH CAROLINA PROFESSIONAL SEAL 047622 ENGINEER SHAW AYDEN

© copyright : MULHERN & KUHP Structural Engineering, Inc.

MULHERN+KUHP
RESIDENTIAL STRUCTURAL ENGINEERING
3300 Brooktrails Ave, Building 4 • Ambler, PA 19002
p 215-646-5001 • mulhernkuhp.com
NC License # C-3825

M&K project number: 192-17017

project mgr: SMK
drawn by: JPP
issue date: 09-04-20

REVISIONS:
date: initial:

ARCH: v.01.01.00.00

MUNGO HOMES

STRUCTURAL DETAILS
TELFAIR
WIND SPEED < 115 MPH NORTH CAROLINA

sheet: SW-3

3/27/25

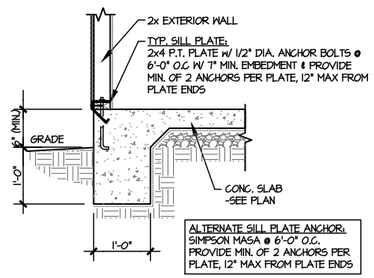


TYPICAL TURNDOWN @ EXT. WALL
1 SCALE: 3/8"=1'-0"

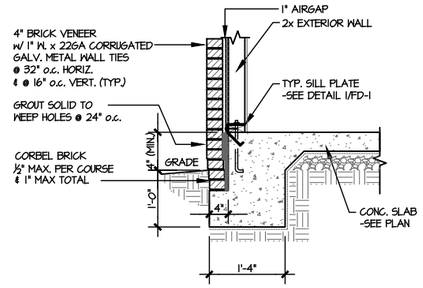


TYPICAL TURNDOWN @ EXT. WALL (BRICK)
2 SCALE: 3/8"=1'-0"

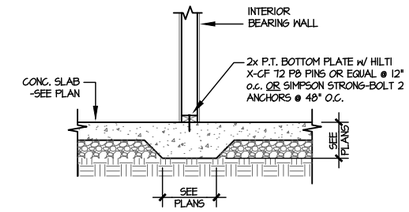


TYPICAL THICKENED SLAB @ INTERIOR BEARING WALL
3 SCALE: 3/8"=1'-0"

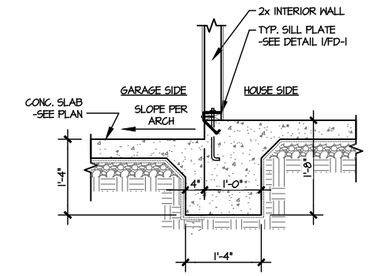


TYPICAL INT. FOOTING BETWEEN HOUSE & GARAGE
4 SCALE: 3/8"=1'-0"

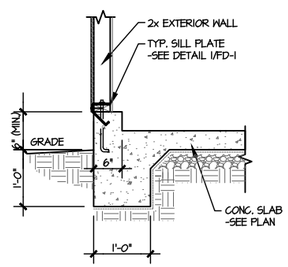


TYPICAL TURNDOWN @ EXT. GARAGE WALL
5 SCALE: 3/8"=1'-0"

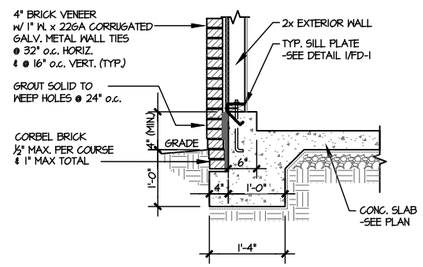


TYPICAL TURNDOWN @ EXT. GARAGE WALL (BRICK)
6 SCALE: 3/8"=1'-0"

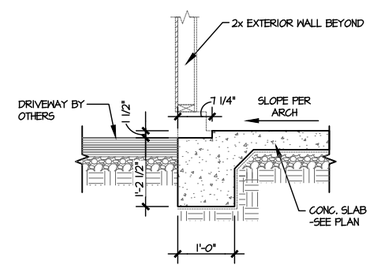


GARAGE OPENING
7 SCALE: 3/8"=1'-0"

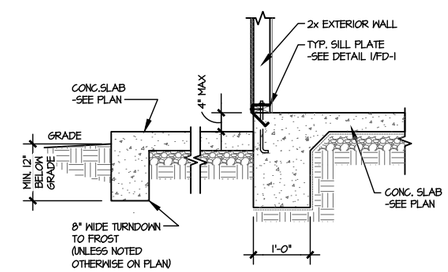


TYPICAL TURNDOWN @ PATIO/PORCH
8 SCALE: 3/8"=1'-0"

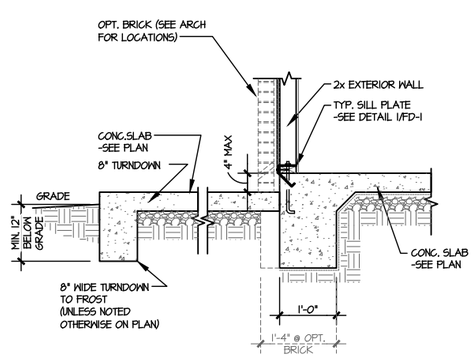


TYPICAL TURNDOWN @ PATIO/PORCH (BRICK)
9 SCALE: 3/8"=1'-0"

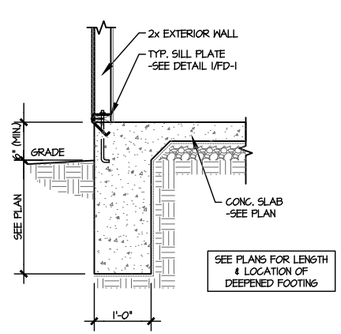


TYPICAL TURNDOWN W/ DEEPENED FTG. @ EXT. WALL
10 SCALE: 3/8"=1'-0"

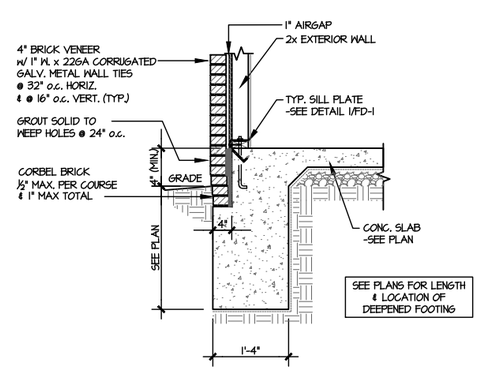


TYPICAL TURNDOWN @ EXT. WALL (BRICK)
11 SCALE: 3/8"=1'-0"

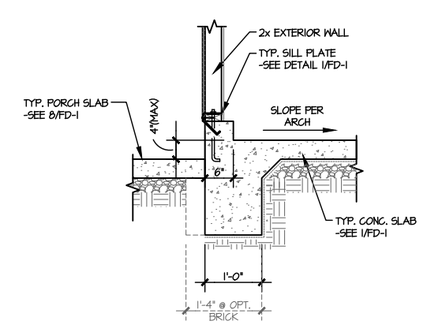


TYPICAL TURNDOWN @ COVERED PORCH/ATTACHED GARAGE
12 SCALE: 3/8"=1'-0"

seal:

NORTH CAROLINA PROFESSIONAL SEAL 047622 ENGINEER SHAWN DEL

© copyright : MULHERN & KULP Structural Engineering, Inc.

MULHERN+KULP
RESIDENTIAL STRUCTURAL ENGINEERING
3000 Beverlodge Ave, Building 4 • Jenkintown, PA 19002
p:215-658-0000 • mulhernkulp.com
NC License # C-3825

M&K project number: 192-17017

project mgr: SMK
drawn by: JPP
issue date: 09-04-20

REVISIONS:

| date: | initial: |
|---|---|
| | |
| | |
| | |

ARCH: v.01.01.00.00

MUNGO HOMES

# FOUNDATION DETAILS

TELFAIR

WIND SPEED < 115 MPH NORTH CAROLINA

sheet: FD-1

3/27/25

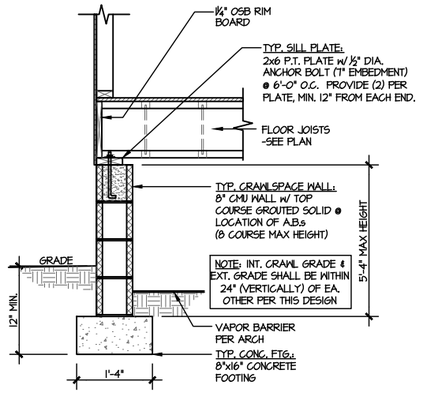


## 1 TYPICAL CRAWLSPACE FOUNDATION
SCALE: 3/8"=1'-0"

## 2 NOT USED
SCALE: 3/8"=1'-0"

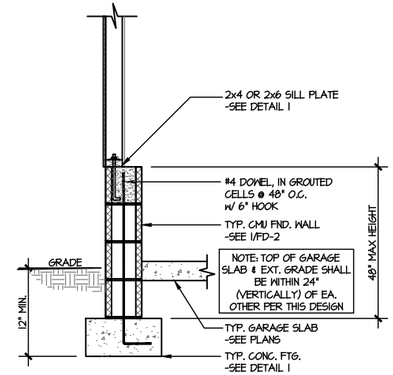


## 3 TYPICAL PERIMETER FOOTING @ EXTERIOR GARAGE WALL
SCALE: 3/8"=1'-0"

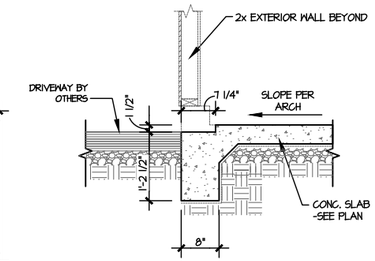


## 4 TYPICAL TURNDOWN FOOTING AT EXTERIOR GARAGE APRON
SCALE: 3/8"=1'-0"

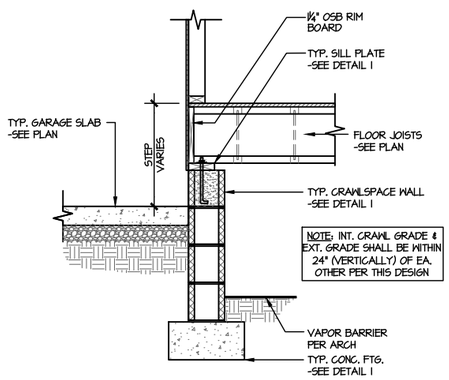


## 5 TYPICAL CRAWLSPACE FOUNDATION @ INTERIOR GARAGE WALL
SCALE: 3/8"=1'-0"

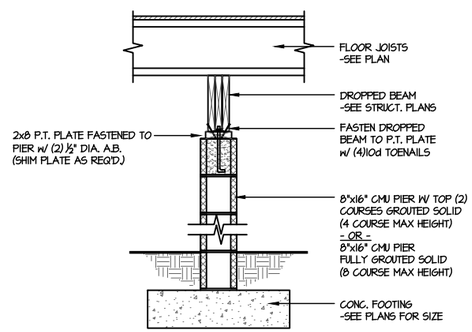


## 6 TYPICAL CRAWLSPACE FOUNDATION @ INTERIOR PIER
SCALE: 3/8"=1'-0"

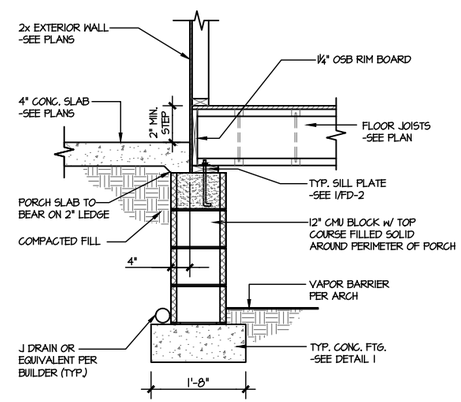


## 7 TYPICAL CRAWLSPACE FOUNDATION @ PORCH SLAB
SCALE: 3/8"=1'-0"

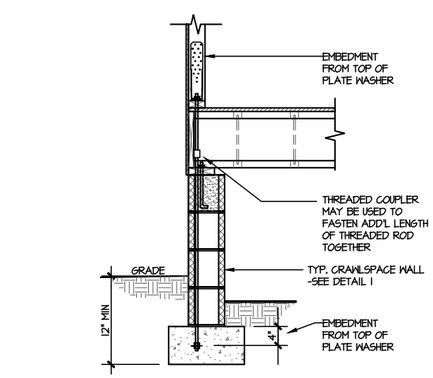


## A TYPICAL CRAWLSPACE FOUNDATION HOLD-DOWN INSTALLATION
SCALE: 3/8"=1'-0"

w/ STONE VENEER OR SIDING

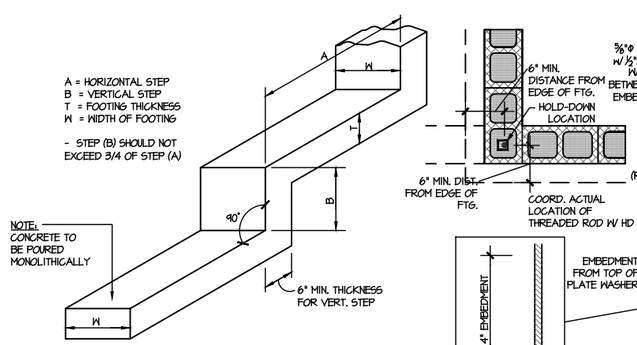


## B TYPICAL STEPPED FOOTING DETAIL
SCALE: N.T.S

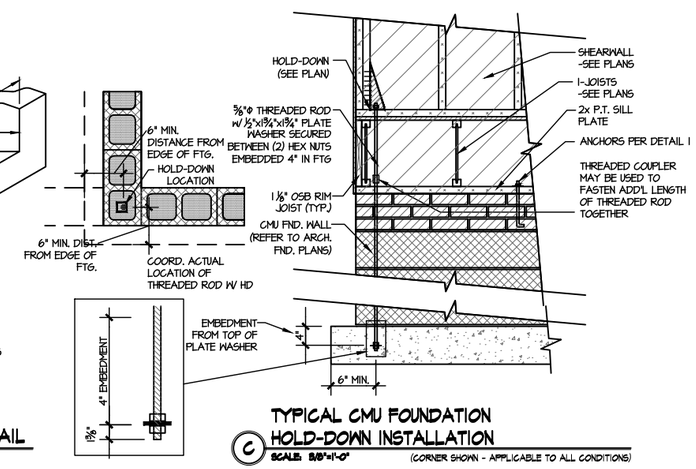


## C TYPICAL CMU FOUNDATION HOLD-DOWN INSTALLATION
SCALE: 3/8"=1'-0"

(CORNER SHOWN - APPLICABLE TO ALL CONDITIONS)

seal:

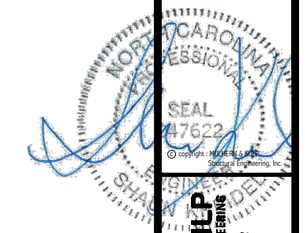


© copyright : MULHERN & KUHP Structural Engineering, Inc.

MULHERN+KUHP
RESIDENTIAL STRUCTURAL ENGINEERING
3320 Brookside Ave, Building 4 • Ambler, PA 19002
p 215-646-5011 • mulhernkuhp.com
NC License # C-3825

M&K project number: 192-17017

project mgr: SMK
drawn by: JPP
issue date: 09-04-20

REVISIONS:
date: initial:

ARCH: v.01.01.00.00

MUNGO HOMES

FOUNDATION DETAILS

TELFAIR

WIND SPEED < 115 MPH NORTH CAROLINA

sheet:

FD-2

3/27/25

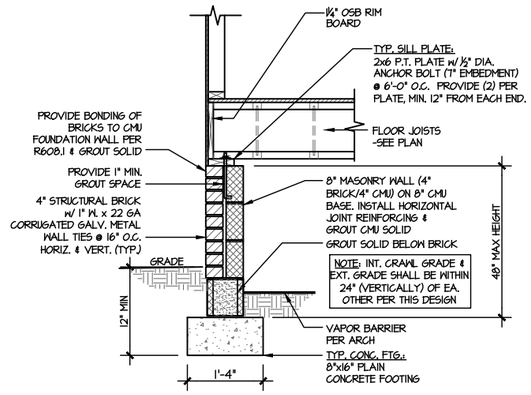


## 1 TYPICAL CRAWLSPACE FOUNDATION
SCALE: 3/8"=1'-0" w/ BRICK WATERTABLE

## 2 NOT USED
SCALE: 3/8"=1'-0"

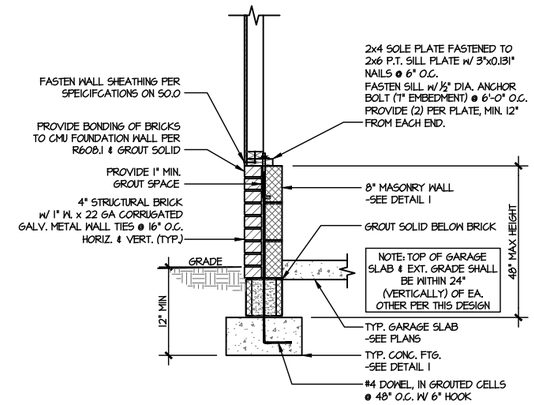


## 3 TYPICAL CRAWLSPACE FOUNDATION @ EXTERIOR GARAGE WALL
SCALE: 3/8"=1'-0" w/ BRICK WATERTABLE

## 4 NOT USED
SCALE: 3/8"=1'-0"

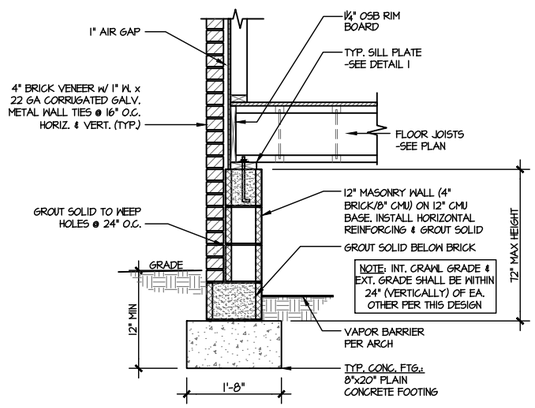


## 5 TYPICAL CRAWLSPACE FOUNDATION
SCALE: 3/8"=1'-0" w/ FULL BRICK VENEER

## 6 NOT USED
SCALE: 3/8"=1'-0"

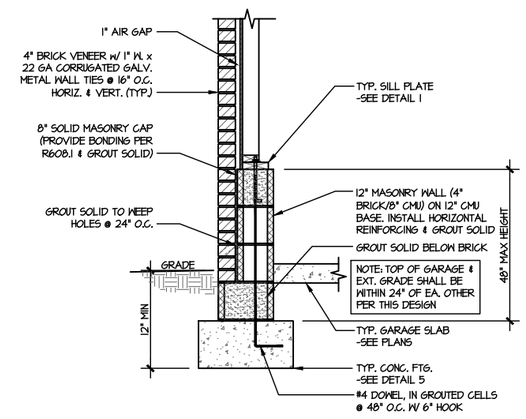


## 7 TYPICAL CRAWLSPACE FOUNDATION @ EXTERIOR GARAGE WALL
SCALE: 3/8"=1'-0" w/ FULL BRICK VENEER

## 8 NOT USED
SCALE: 3/8"=1'-0"

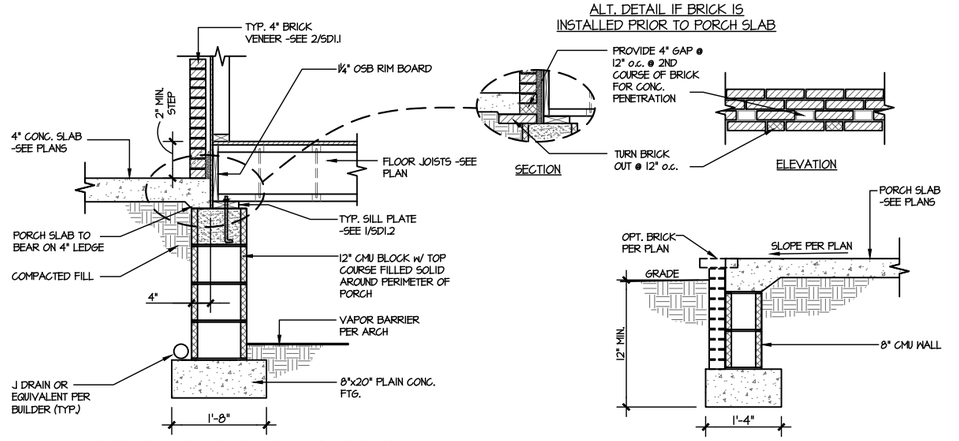


## 9 TYPICAL CRAWLSPACE FOUNDATION @ PORCH/PATIO SLAB
SCALE: 3/8"=1'-0" w/ BRICK VENEER

## 10 TYPICAL FOOTING @ PORCH SLAB
SCALE: 3/8"=1'-0"

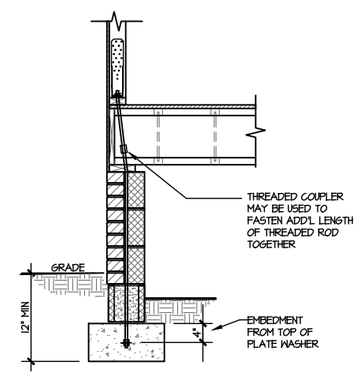


## D TYPICAL CRAWLSPACE FOUNDATION HOLD-DOWN INSTALLATION
SCALE: 3/8"=1'-0" w/ BRICK WATERTABLE

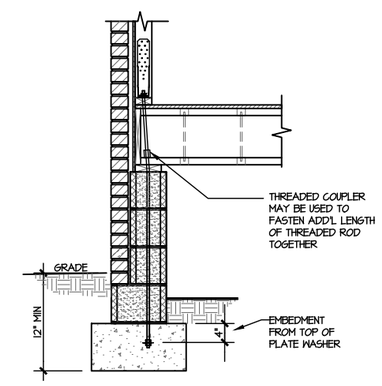


## E TYPICAL CRAWLSPACE FOUNDATION HOLD-DOWN INSTALLATION
SCALE: 3/8"=1'-0" w/ FULL BRICK VENEER

seal:

NORTH CAROLINA PROFESSIONAL SEAL 047622 ENGINEER SHAW KUEN-DEN

© copyright : MULHERN+KUEP Structural Engineering, Inc.

MULHERN+KUEP
RESIDENTIAL STRUCTURAL ENGINEERING
3320 Brookside Ave, Building 4 • Audubon, PA 19002
p 215-545-5005 • mulhernkuep.com
NC License # C-3825

M&K project number: 192-17017

project mgr: SMK
drawn by: JPP
issue date: 09-04-20

REVISIONS:

| date: | initial: |
|---|---|
| | |
| | |
| | |

ARCH: v.01.01.00.00

MUNGO HOMES

FOUNDATION DETAILS

TELFAIR

WIND SPEED < 115 MPH NORTH CAROLINA

sheet: FD-3

3/27/25

## LEDGER NOTE

- LEDGER TO END TRUSS:
  -FASTEN 2x LEDGER (MATCH D.J.) TO END TRUSS VERTICALS W/ (1) ½" DIA. THRU BOLT + (4) 2½"X0.135" NAILS @ 16" O.C. PACK OUT END TRUSS AS REQ'D FOR LEDGER FASTENING.
- LEDGER TO RIMBOARD/BLOCKING:
  -FASTEN 2x LEDGER (MATCH D.J.) TO RIMBOARD/BLOCKING W/ (1) ½" DIA. THRU BOLT + (4) 2½"X0.135" NAILS @ 16" O.C.

- PROVIDE (2) BOLTS IN END (2) JOIST BAYS @ EACH END OF DECK
- INSTALL (1) SIMPSON H3 CLIP ON LAST (2) DECK JOISTS @ EACH END OF DECK, CONNECTING SIDE OF JOIST TO TOP OF LEDGER (IRC R502.2.2)

- ALT. LEDGER SPEC:
  FASTEN 2X10 LEDGER TO RIMBOARD W/ (2) ¼" DIA. X 3½" LONG SIMPSON SDS SCREWS @ 16" O.C.

* NOT APPLICABLE AT BRICK CONDITIONS

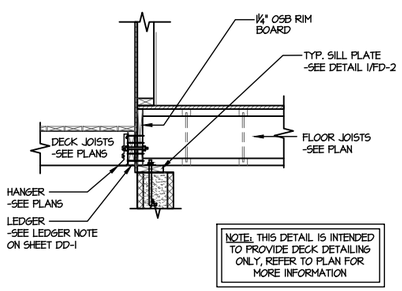


TYPICAL DECK CONNECTION
1 @ CRAWLSPACE
SCALE: 3/8"=1'-0"

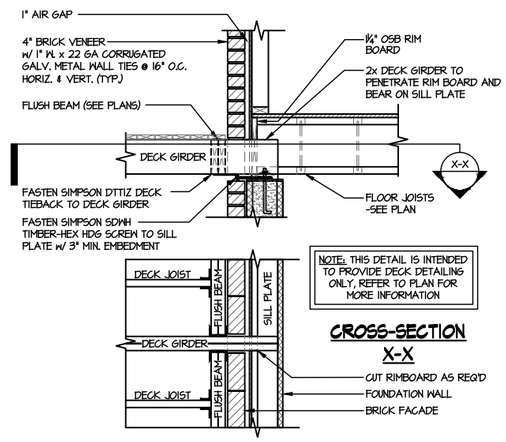


CROSS-SECTION
X-X

TYPICAL DECK CONNECTION
2 @ CRAWLSPACE w/ BRICK
SCALE: 3/8"=1'-0"

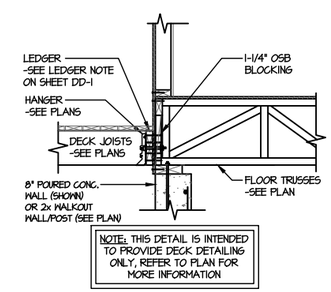


TYPICAL DECK CONNECTION
3 @ BASEMENT
SCALE: 3/8"=1'-0"
PERPENDICULAR FRAMING

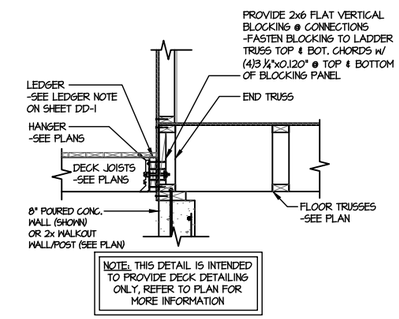


TYPICAL DECK CONNECTION
4 @ BASEMENT
SCALE: 3/8"=1'-0"
PARALLEL FRAMING

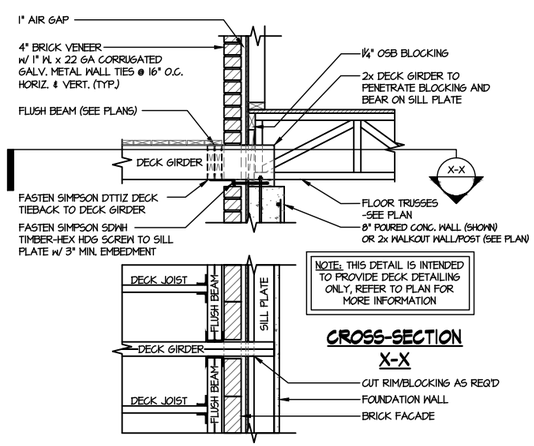


CROSS-SECTION
X-X

TYPICAL DECK CONNECTION
5 @ BASEMENT w/ BRICK
SCALE: 3/8"=1'-0"
PERPENDICULAR FRAMING

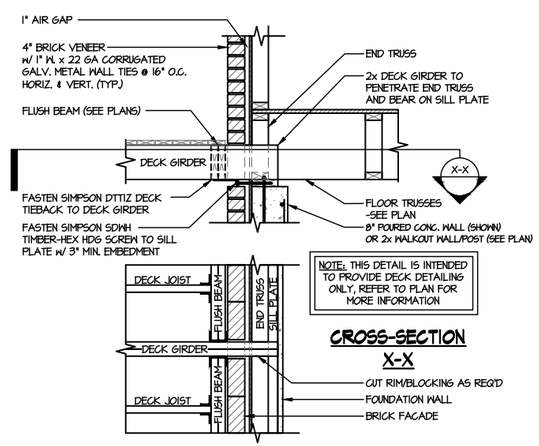


CROSS-SECTION
X-X

TYPICAL DECK CONNECTION
6 @ BASEMENT w/ BRICK
SCALE: 3/8"=1'-0"
PARALLEL FRAMING

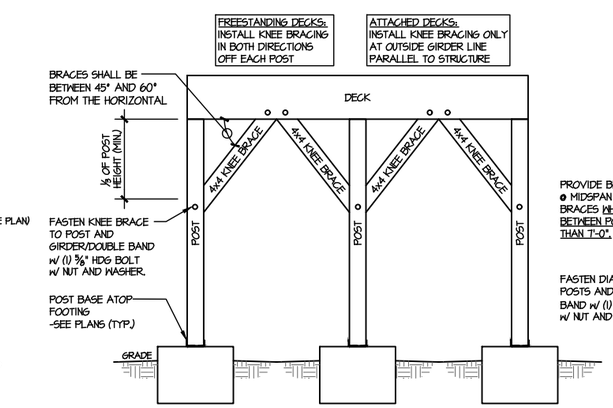


KNEE BRACING

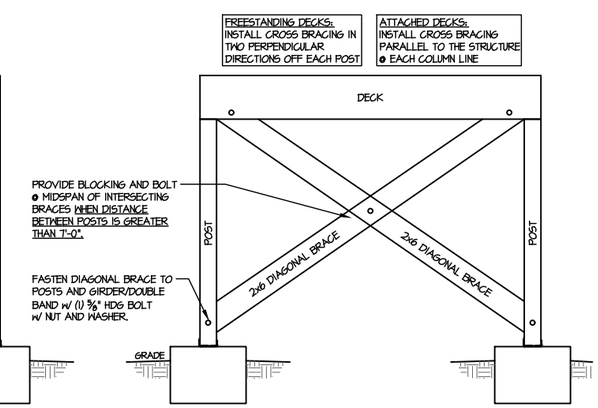


CROSS BRACING

TYPICAL LATERAL BRACING DETAILS FOR DECKS GREATER THAN 4' HIGH
A
SCALE: NTS

seal:

© copyright : MULHERN & KULP Structural Engineering, Inc.

MULHERN+KULP
RESIDENTIAL STRUCTURAL ENGINEERING
3000 Bryn Mawr Ave, Building 4 • Jenkintown, PA 19002
p 215-635-0201 • mulhernkulp.com
NC License # C-3825

M&K project number: 192-17017

project mgr: SMK
drawn by: JPP
issue date: 09-04-20

REVISIONS:
date: initial:

ARCH: v.01.01.00.00

MUNGO HOMES

FOUNDATION DETAILS

TELFAIR

WIND SPEED < 115 MPH NORTH CAROLINA

sheet:
DD-1

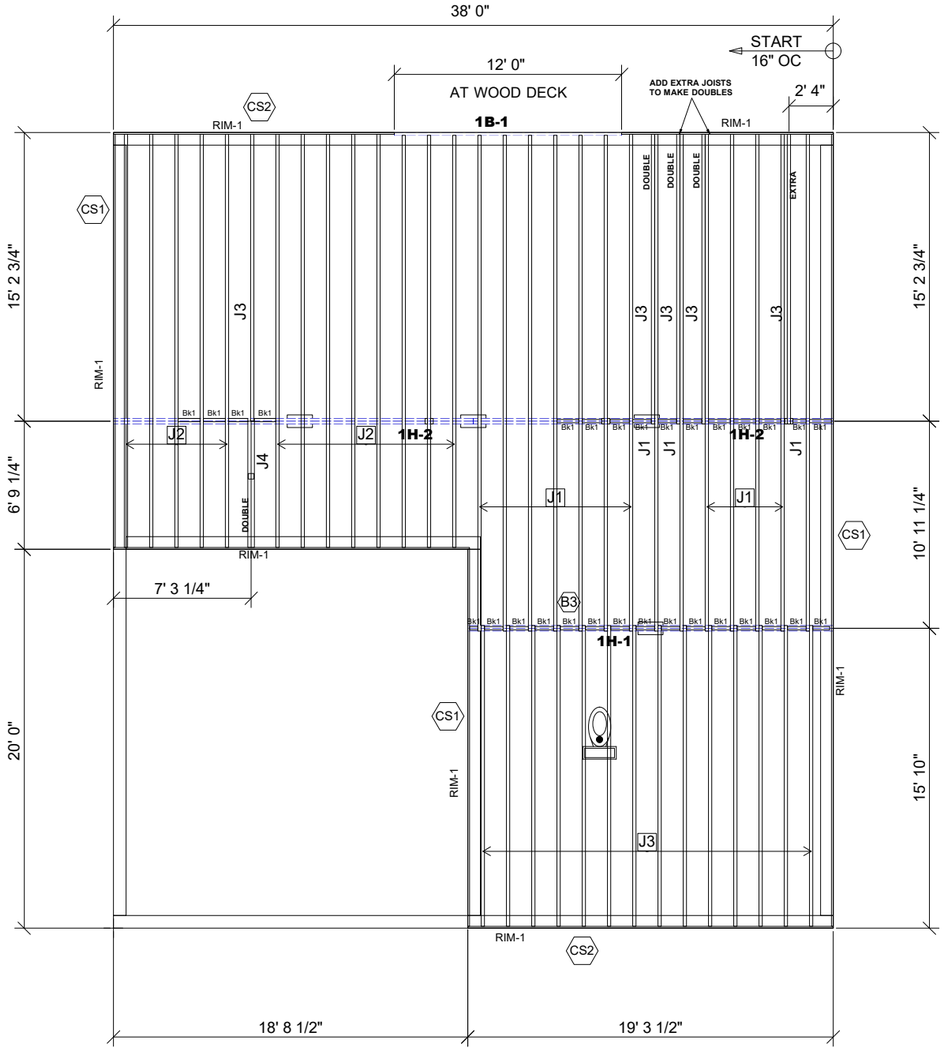


| Products | | | | | |
|---|---|---|---|---|---|
| PlotID | Length | Product | Plies | Net Qty | Fab Type |
| J1 | 27' 0" | 11 7/8" TJI® 210 | 1 | 14 | MFD |
| J2 | 22' 0" | 11 7/8" TJI® 210 | 1 | 13 | MFD |
| J3 | 16' 0" | 11 7/8" TJI® 210 | 1 | 19 | MFD |
| J4 | 7' 0" | 11 7/8" TJI® 210 | 2 | 2 | MFD |
| 1H-1 | 20' 0" | 1 3/4" x 9 1/4" 2.0E Microllam® LVL | 2 | 2 | MFD |
| 1H-2 | 19' 0" | 1 3/4" x 9 1/4" 2.0E Microllam® LVL | 2 | 4 | MFD |
| 1B-1 | 12' 0" | 1 3/4" x 11 7/8" 2.0E Microllam® LVL | 1 | 1 | MFD |
| RIM-1 | 16' 0" | 1 1/8" x 11 7/8" TJ® Rim Board | 1 | 11 | MFD |
| Bk1 | 2' 0" | 11 7/8" TJI® 210 | 1 | 30 | FF |

| Connector Summary | | | |
|---|---|---|---|
| PlotID | Qty | Manuf | Product |
| H1 | 8 | Simpson | IUS2.06/11.88 |

● Avoid Plumbing Drops

**FIELD LOCATE PLUMBING DROPS/CAN LIGHTS, ETC... PRIOR TO JOIST SECUREMENT TO AVOID INTERFERENCE.**

LAYOUT FOR 19.2" O/C

| | |
|---|---|
| 1= 19-3/16" | 9= 172-13/16" |
| 2= 38-3/8" | 10= 192" |
| 3=57-5/8" | 11= 211-3/16" |
| 4= 76-13/16" | 12= 230-3/8" |
| 5= 96" | 13= 249-13/16" |
| 6= 115-3/16" | 14= 268-13/16" |
| 7= 134-3/8" | 15= 288" |
| 8= 153-5/8" | |

GENERAL NOTES:

1.) TOP CHORD OF JOISTS ARE PAINTED RED AT NUMBERED END. PLACE PAINTED END AS NOTED ON PLAN.
2.) FOLLOW SPECIAL SPACING AND LOCATION DIMENSIONS FOR EXTRAS OR SHIFTED JOISTS AS SHOWN ON PLAN.
3.) ALL INTERIOR WALL PLATES MUST BE LEVEL WITH OUTSIDE WALL TOP PLATES.
4.) DO NOT STACK CONSTRUCTION LOADS ON UNA-BRACED JOISTS.
5.) PROVIDE SOLID SUPPORT BELOW ALL BEAM AND HEADER BEARING POINTS IN WALL AND JOIST SPACES CONTINUOUS DOWN TO THE FOUNDATION.
6.) LOCATE CRIPPLE STUDS IN JOIST SPACE DIRECTLY BELOW HEADER JACKS AT ALL FIRST FLOOR EXTERIOR DOOR LOCATIONS.
7.) INSTALL NAILS IN ALL HOLES PROVIDED IN JOIST HANGERS EXCEPT AT BOTTOM CHORD SEAT. PLACE A DAB OF GLUE IN THE HANGER SEAT BEFORE SETTING JOISTS.
8.) IMPORTANT NOTE! NO STRUCTURAL ANALYSIS OF CONVENTIONAL HEADERS HAS BEEN CONDUCTED IF NOT NOTED. THEY ARE CONSIDERED TO BE ADEQUATE TO SUPPORT THE APPLIED LOADS.

PLAN LEGEND

| | |
|---|---|
| 1B-, 2B- | *INDICATES BEAM ABOVE TOP PLATE (FLUSH WITH FLOOR SYSTEM) |
| H-, 1H-, GDH- | INDICATES BEAM BELOW TOP PLATE (DROPPED BELOW FLOOR SYSTEM) |

*BEAMS MAY PROTRUDE ABOVE OR BELOW DECKING OR TOP PLATE RESPECTIVELY. REFER TO DETAIL IF BEAM IS A DIFFERENT DEPTH THAN FLOOR SYSTEM

| | |
|---|---|
| | SINGLE PLY BEAM (ADD LINE FOR EACH ADDITIONAL PLY) |
| SHIFT | SHIFT JOIST TO MISS PLUMBING, ALIGN W/WALL OR SUPPORT FURNITURE |
| EXTRA | A JOIST ADDED TO THE LAYOUT IN ADDITION TO THE ON CENTER JOISTS |
| DOUBLE | TWO JOISTS SIDE BY SIDE (ONLY ASSEMBLED IF NOTED) |

ALL DIMENSIONS TO CENTERLINE UNLESS OTHERWISE NOTED

FRAMER NOTE

1. GLUE AND NAIL PLYWOOD SUBFLOOR TO BEAMS AND GIRDERS AT 6" O/C WHERE NO WALL IS ABOVE.
2. FILL HANGER SEAT WITH GLUE BEFORE SETTING JOIST IN HANGER. FILL ROUND HOLES WITH NAILS.

CRITICAL !!

INSTALL 2X4 SQUASH BLOCKS IN FLOOR TRUSS SPACE BELOW ALL EXTERIOR DOOR HEADER JACKS. CUT 1/16" TALLER THAN TRUSS.

**FIELD VERIFY DIMENSIONS TO JOISTS LOCATED UNDER WALLS!!**

# 1ST FLOOR LAYOUT

SCALE: 1/8"=1'

CS1

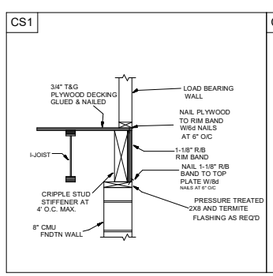


CS2

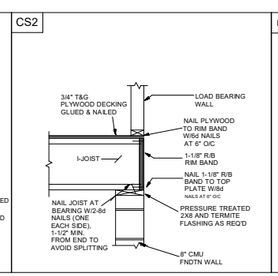


B2B SQUASH BLOCKS

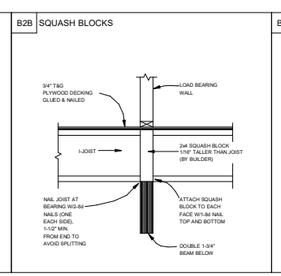


B3 BLOCKING AT BEAM BELOW

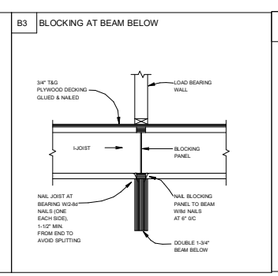


D2 POINT LOADS

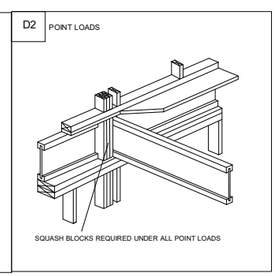


## 1ST FLOOR PLACEMENT PLAN

THIS IS AN ENGINEERED WOOD PRODUCT (EWP) MEMBER PLACEMENT DIAGRAM ONLY: NOT AN ENGINEERED DOCUMENT. EWP members are designed as individual building components to be incorporated into the building design at the specification of the building designer. The Contractor is responsible for the temporary bracing of the floor system, and the building designer is responsible for the permanent bracing and blocking of the floor system and the overall structure. The design of the support structure including but not limited to headers, beams, walls, and columns is also the responsibility of the building designer. It is the responsibility of the General Contractor to verify that the provided layout matches the final intended construction plans, loading conditions, and use. If they do not, it is the responsibility of the General Contractor to notify UFP and provide plans containing the latest specifications and designs. UFP will not be responsible for plan changes by others after final approval of shop drawings, or for errors or modifications made on-site during construction. DO NOT CUT, NOTCH, DRILL, OR OTHERWISE "REPAIR" EWP MEMBERS IN ANY WAY WITHOUT PRIOR WRITTEN AUTHORIZATION BY A LICENSED PROFESSIONAL DESIGNATED BY UFP. The Framer is responsible to verify all dimensions, including adjusting member spacing within tolerances to allow for the drop and rise of plumbing/HVAC, unless noted otherwise. All connectors on this project are to be installed per the connector manufacturer's specifications. All connectors shown that are not joist to joist are suggestions only and are to be verified by the Building Designer or Engineer of Record for suitability to this particular project. UFP accepts no responsibility for the specific application or suitability of any connector that is not joist to joist as they apply to this specific structure.

UFP SITE BUILT
A UFP INDUSTRIES COMPANY
Burlington, NC Locust, NC
Chesapeake, VA Liberty, NC
Clinton, NC Ooltewah, TN
Conway, SC Pearisburg, VA
Jefferson, GA Stanfield, NC
Customer Service (800) 476-9356

TRUSSTRAX INDUSTRIES

This drawing is property of UFP Site Built, LLC. Any unauthorized use of this document without written permission is prohibited. UFP relinquishes ownership of delivered product upon delivery. Owner of product must obtain UFP's authorization prior to any alteration or modification of product; UFP will not be held responsible for any unauthorized modifications done or costs incurred without prior written authorization from UFP.

MUNGO HOMES OF NC

LEANDER LEE PRESERVE

TELFAIR

LOT 67
LILLINGTON, NC

| REVISIONS | | |
|---|---|---|
| DATE | DESCRIPTION | DSN |
| . | . | . |
| . | . | . |
| . | . | . |
| . | . | . |
| . | . | . |
| . | . | . |
| . | . | . |
| . | . | . |

DESIGNER GB1
LAYOUT DATE 5/12/25
ARCH DATE
STRUC DATE

JOB #: 25050684F1

# 72513861 67 LEANDER LEE PRESERVE

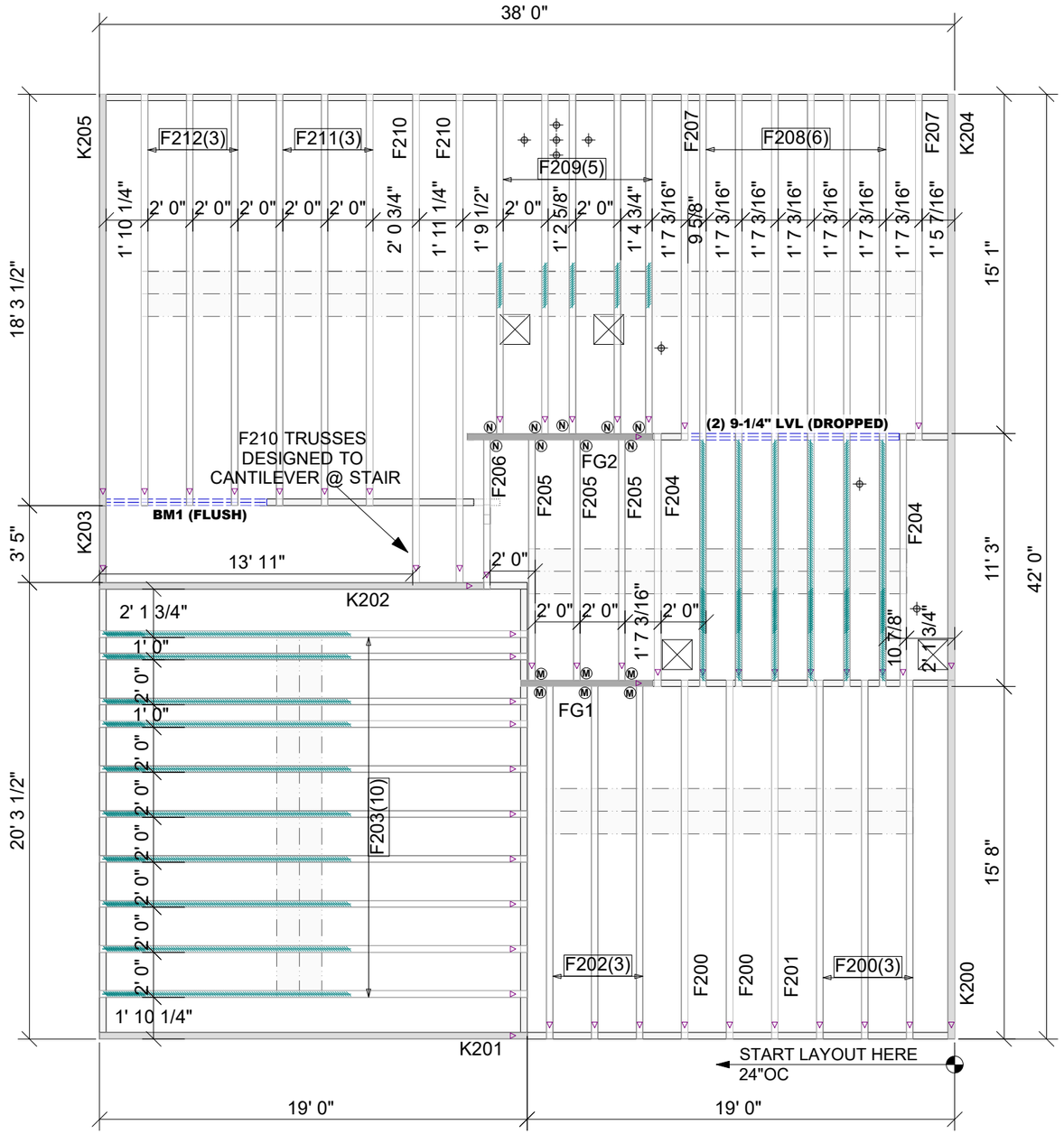


| Products | | | | | |
|---|---|---|---|---|---|
| PlotID | Length | Product | Plies | Net Qty | Fab Type |
| BM1 (FLUSH) | 8' 0" | 1 3/4" x 9 1/4" 2.0E Microllam® LVL | 2 | 2 | MFD |

## Floor Hanger List

| MARK | TYPE | QTY |
|---|---|---|
| M | THA422 | 6 |
| N | THAC422 | 9 |

## 2ND FLOOR PLACEMENT PLAN

△ INDICATES LEFT END OF TRUSS  SCALE: N.T.S

THIS IS A TRUSS PLACEMENT DIAGRAM (TPD) ONLY: NOT AN ENGINEERED DOCUMENT. Trusses are designed as individual building components to be incorporated into the building design at the specification of the building designer. See individual truss design drawings (TDD's) for each truss design identified on the TPD. The Contractor is responsible for the temporary bracing of the roof and floor system, and requirements for the permanent restraint/bracing of truss systems may be met by following the methods outlined in ANSI-TPI 1-2014 - 2.3.3. The design of the support structure including but not limited to headers, beams, walls, and columns is also the responsibility of the building designer. For general guidance regarding installation and bracing, consult "Building Component Safety Information" (BCSI) available from the SBC Association (www.sbcacomponents.com). It is the responsibility of the General Contractor to verify that the provided component layout matches the final intended construction plans, loading conditions, and use. If they do not, it is the responsibility of the General Contractor to notify UFP and provide plans containing the latest specifications and designs. UFP will not be responsible for plan changes by others after final approval of shop drawings, or for errors or modifications made on-site during construction. DO NOT CUT, NOTCH, DRILL, OR OTHERWISE "REPAIR" MANUFACTURED TRUSSES IN ANY WAY WITHOUT PRIOR WRITTEN AUTHORIZATION BY A LICENSED PROFESSIONAL DESIGNATED BY UFP. The Framer is responsible to verify all dimensions, including adjusting member spacing within tolerances to allow for the drop and rise of plumbing/HVAC, unless noted otherwise. Truss-to-wall connections, if shown, are for uplift only and do not consider lateral loads. All connectors on this project are to be installed per the connector manufacturer's specifications. All connectors shown that are not truss-to-truss are truss-to-truss are suggestions only and are to be verified by the Building Designer or Engineer of Record for suitability to this particular project. UFP accepts no responsibility for the specific application or suitability of any connector that is not truss-to-truss as they apply to this specific structure.

THESE VALUES ARE APPROXIMATE ONLY

ROOF AREA: 0 ft² sqft | VALLEY LINES: 0 ft | RIDGE LINE: 0 ft | HIP LINES: 0 ft

This drawing is property of UFP Site Built, LLC. Any unauthorized use of this document without written permission is prohibited. UFP relinquishes ownership of delivered product upon delivery. Owner of product must obtain UFP's authorization prior to any alteration or modification of product; UFP will not be held responsible for any unauthorized modifications done or costs incurred without prior written authorization from UFP.

UFP SITE BUILT
A UFP INDUSTRIES COMPANY
Burlington, NC Locust, NC
Chesapeake, VA Liberty, NC
Clinton, NC Ooltewah, TN
Conway, SC Pearisburg, VA
Jefferson, GA Stanfield, NC
Customer Service (800) 476-9356
TrussTrax.ufpi.com

MUNGO HOMES

TELFAIR A & B 2ND FLR

| REVISIONS | | |
|---|---|---|
| DATE | DESCRIPTION | DSN |

DESIGNER LJP
LAYOUT DATE 04/30/2025
ARCH DATE -
STRUC DATE -
JOB #: 25042784F2

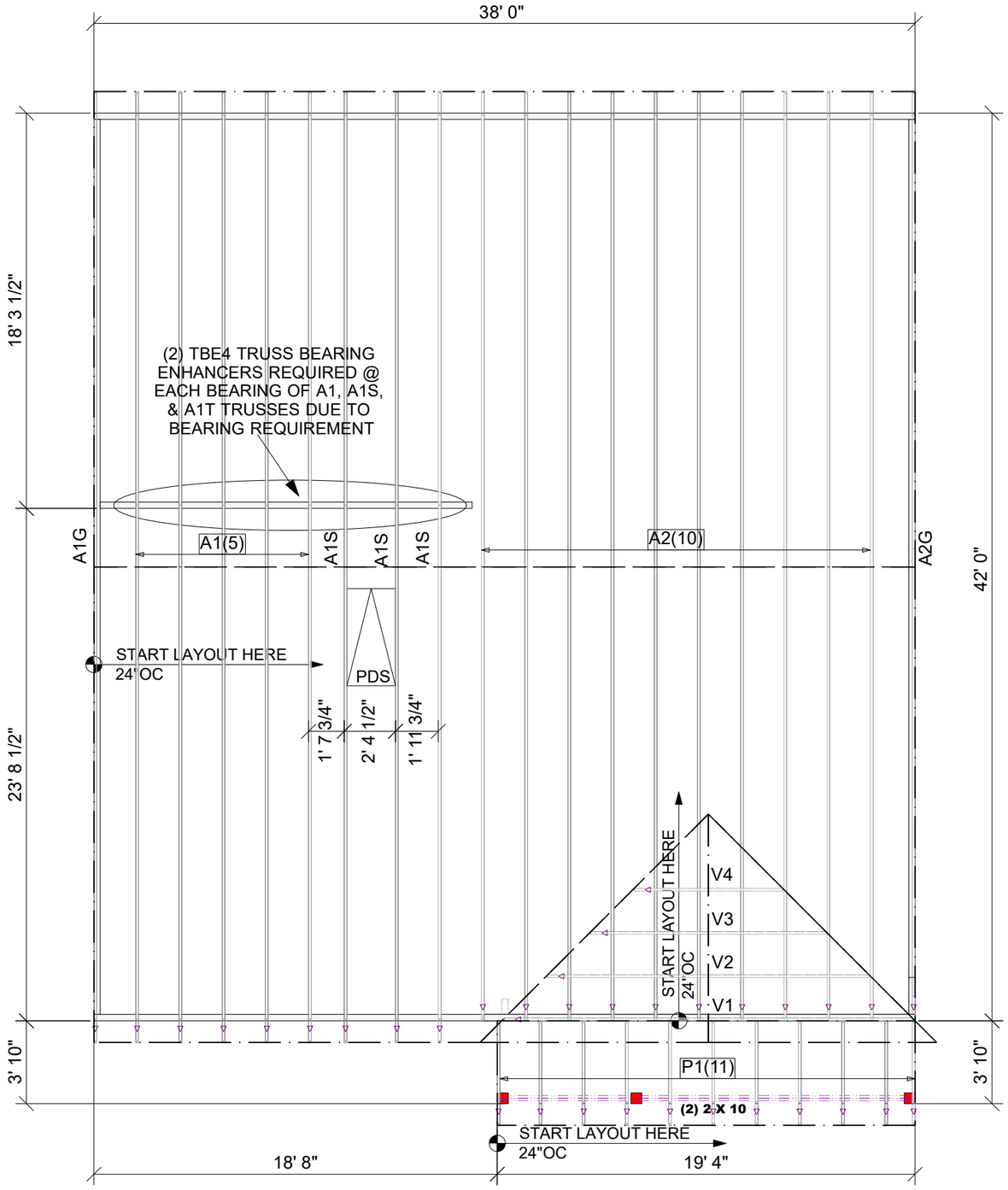


**ROOF PLACEMENT PLAN**

**NOTE**

(4) LUS26 HANGERS TO BE USED @ PDS HEADERS (NOT SHOWN)

ADD 2X4 BLOCKING IN FIELD FOR ROOF SHEATHING AND DRYWALL @ PULL DOWN STAIR AREA AS NEEDED

△ INDICATES LEFT END OF TRUSS

SCALE: N.T.S

THIS IS A TRUSS PLACEMENT DIAGRAM (TPD) ONLY: NOT AN ENGINEERED DOCUMENT. Trusses are designed as individual building components to be incorporated into the building design at the specification of the building designer. See individual truss design drawings (TDD's) for each truss design identified on the TPD. The Contractor is responsible for the temporary bracing of the roof and floor system, and requirements for the permanent restraint/bracing of truss systems may be met by following the methods outlined in ANSI-TPI 1-2014 - 2.3.3. The design of the support structure including but not limited to headers, beams, walls, and columns is also the responsibility of the building designer. For general guidance regarding installation and bracing, consult "Building Component Safety Information" (BCSI) available from the SBC Association (www.sbcacomponents.com). It is the responsibility of the General Contractor to verify that the provided component layout matches the final intended construction plans, loading conditions, and use. If they do not, it is the responsibility of the General Contractor to notify UFP and provide plans containing the latest specifications and designs. UFP will not be responsible for plan changes by others after final approval of shop drawings, or for errors or modifications made on-site during construction. DO NOT CUT, NOTCH, DRILL, OR OTHERWISE "REPAIR" MANUFACTURED TRUSSES IN ANY WAY WITHOUT PRIOR WRITTEN AUTHORIZATION BY A LICENSED PROFESSIONAL DESIGNATED BY UFP. The Framer is responsible to verify all dimensions, including adjusting member spacing within tolerances to allow for the drop and rise of plumbing/HVAC, unless noted otherwise. Truss-to-wall connections, if shown, are for uplift only and do not consider lateral loads. All connectors on this project are to be installed per the connector manufacturer's specifications. All connectors shown that are not truss-to-truss are suggestions only and are to be verified by the Building Designer or Engineer of Record for suitability to this particular project. UFP accepts no responsibility for the specific application or suitability of any connector that is not truss-to-truss as they apply to this specific structure.

THESE VALUES ARE APPROXIMATE ONLY

| ROOF AREA: | 1913.11 ft² sqft | RIDGE LINE: | 48.56 ft | VALLEY LINES: | 31.14 ft | HIP LINES: | 0 ft |
|---|---|---|---|---|---|---|---|

**UFP** SITE BUILT
A UFP INDUSTRIES COMPANY

Burlington, NC
Chesapeake, VA
Clinton, NC
Conway, SC
Jefferson, GA
Locust, NC
Liberty, NC
Ooltewah, TN
Pearisburg, VA
Stanfield, NC

Customer Service (800) 476-9356

TRUSSTRAX UFP CONSTRUCTION
TrussTrax.ufpi.com

This drawing is property of UFP Site Built, LLC. Any unauthorized use of this document without written permission is prohibited. UFP relinquishes ownership of delivered product upon delivery. Owner of product must obtain UFP's authorization prior to any alteration or modification of product; UFP will not be held responsible for any unauthorized modifications done or costs incurred without prior written authorization from UFP.

**MUNGO HOMES**

**TELFAIR B RF**

| REVISIONS | | |
|---|---|---|
| DATE | DESCRIPTION | DSN |
| - | - | - |
| - | - | - |
| - | - | - |
| - | - | - |
| - | - | - |
| - | - | - |
| - | - | - |
| - | - | - |

DESIGNER LJP
LAYOUT DATE 05/14/2025
ARCH DATE -
STRUC DATE -

JOB #: 25050684