ENGINEERING BY TRENCO
A MiTek Affiliate

RE: 4699682
JSJ, Maplewood Prime B

Trenco
818 Soundside Rd
Edenton, NC 27932

Site Information:

Customer: JSJ Builders Project Name: 4699682
Lot/Block: 73 Model: Maplewood Prime B
Address: Subdivision: DUCKS LANDING
City: Lillington State: NC

General Truss Engineering Criteria & Design Loads (Individual Truss Design Drawings Show Special Loading Conditions):

Design Code: IRC2015/TPI2014 Design Program: MiTek 20/20 8.6
Wind Code: ASCE 7-10 Wind Speed: 130 mph
Roof Load: 40.0 psf Floor Load: N/A psf

This package includes 18 individual, dated Truss Design Drawings and 0 Additional Drawings.

No.	Seal#	Truss Name	Date
1	I70935384	A01	1/23/2025
2	I70935385	A02	1/23/2025
3	I70935386	A03	1/23/2025
4	I70935387	A04	1/23/2025
5	I70935388	A05	1/23/2025
6	I70935389	B01	1/23/2025
7	I70935390	B02	1/23/2025
8	I70935391	C01	1/23/2025
9	I70935392	C02	1/23/2025
10	I70935393	C03	1/23/2025
11	I70935394	C04	1/23/2025
12	I70935395	V01	1/23/2025
13	I70935396	V02	1/23/2025
14	I70935397	V03	1/23/2025
15	I70935398	V04	1/23/2025
16	I70935399	V05	1/23/2025
17	I70935400	V06	1/23/2025
18	I70935401	V07	1/23/2025

The truss drawing(s) referenced above have been prepared by
Truss Engineering Co. under my direct supervision
based on the parameters provided by Builders FirstSource-Sumter,SC.

Truss Design Engineer's Name: Tony Miller

My license renewal date for the state of North Carolina is December 31, 2025.

North Carolina COA: C-0844

IMPORTANT NOTE: The seal on these truss component designs is a certification that the engineer named is licensed in the jurisdiction(s) identified and that the designs comply with ANSI/TPI 1. These designs are based upon parameters shown (e.g., loads, supports, dimensions, shapes and design codes), which were given to TRENCO. Any project specific information included is for TRENCO customers file reference purpose only, and was not taken into account in the preparation of these designs. TRENCO has not independently verified the applicability of the design parameters or the designs for any particular building. Before use, the building designer should verify applicability of design parameters and properly incorporate these designs into the overall building design per ANSI/TPI 1, Chapter 2.

NORTH CAROLINA PROFESSIONAL SEAL 023594 ENGINEER TONY R. MILLER

January 23, 2025

Tony Miller

Job	Truss	Truss Type	Qty	Ply	JSJ, Maplewood Prime B
4699682	A01	Common Supported Gable	1	1	I70935384 Job Reference (optional)

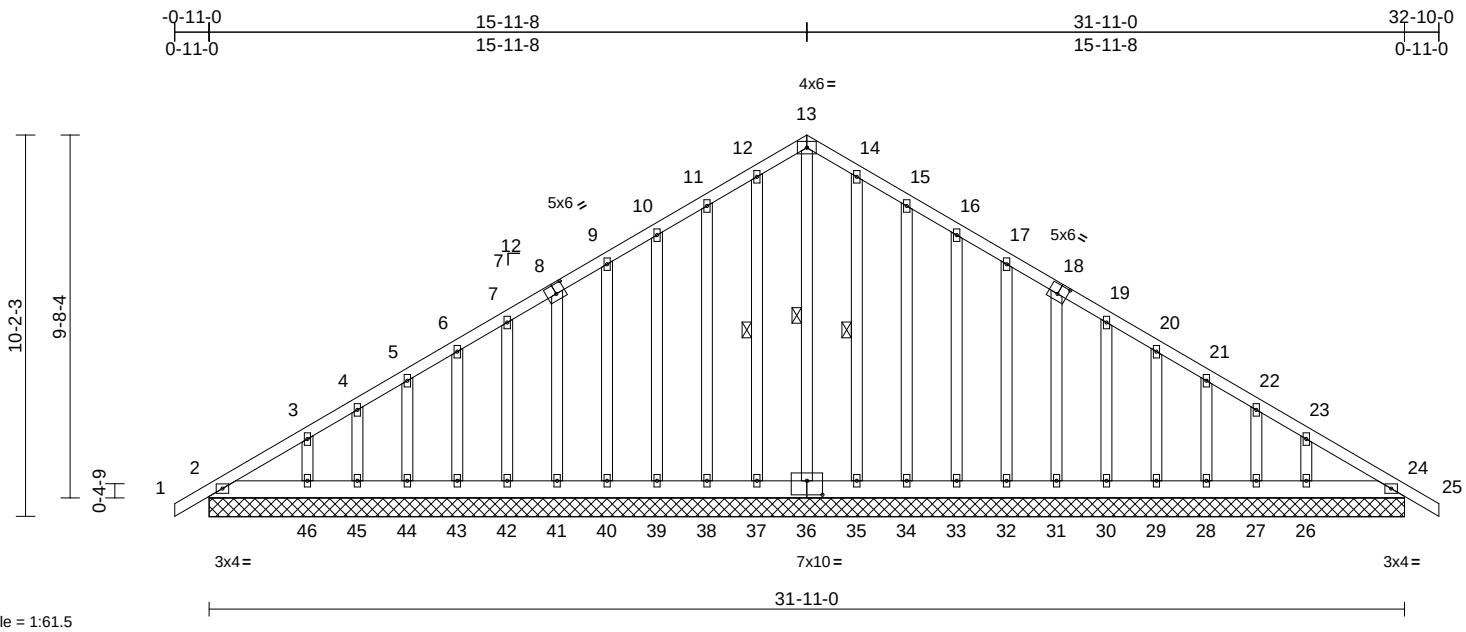

Scale = 1:61.5

Plate Offsets (X, Y): [8:0-3-0,0-3-0], [18:0-3-0,0-3-0], [36:0-5-0,0-4-8]

Loading	(psf)	Spacing	2-0-0	CSI		DEFL	in	(loc)	l/defl	L/d	PLATES	GRIP
TCLL (roof)	20.0	Plate Grip DOL	1.15	TC	0.15	Vert(LL)	n/a	-	n/a	999	MT20	244/190
TCDL	10.0	Lumber DOL	1.15	BC	0.18	Vert(CT)	n/a	-	n/a	999		
BCLL	0.0*	Rep Stress Incr	YES	WB	0.12	Horz(CT)	0.02	24	n/a	n/a		
BCDL	10.0	Code	IRC2015/TPI2014	Matrix-MS							Weight: 286 lb	FT = 20%

LUMBER
TOP CHORD 2x4 SP No.2
BOT CHORD 2x6 SP No.2
OTHERS 2x4 SP No.3

BRACING
TOP CHORD Structural wood sheathing directly applied or 10-0-0 oc purlins.
BOT CHORD Rigid ceiling directly applied or 6-0-0 oc bracing.
WEBS 1 Row at midpt 13-36, 12-37, 14-35

REACTIONS (size) 2=31-11-0, 24=31-11-0, 26=31-11-0, 27=31-11-0, 28=31-11-0, 29=31-11-0, 30=31-11-0, 31=31-11-0, 32=31-11-0, 33=31-11-0, 34=31-11-0, 35=31-11-0, 36=31-11-0, 37=31-11-0, 38=31-11-0, 39=31-11-0, 40=31-11-0, 41=31-11-0, 42=31-11-0, 43=31-11-0, 44=31-11-0, 45=31-11-0, 46=31-11-0, 49=31-11-0
Max Horiz 2=-328 (LC 10), 49=-328 (LC 10)
Max Uplift 2=-1 (LC 20), 24=-62 (LC 9), 26=-99 (LC 13), 27=-48 (LC 13), 28=-64 (LC 13), 29=-62 (LC 13), 30=-56 (LC 13), 31=-62 (LC 13), 32=-64 (LC 13), 33=-61 (LC 13), 34=-72 (LC 13), 35=-32 (LC 13), 37=-29 (LC 12), 38=-73 (LC 12), 39=-61 (LC 12), 40=-62 (LC 12), 41=-64 (LC 12), 42=-53 (LC 12), 43=-69 (LC 12), 44=-36 (LC 12), 45=-217 (LC 20), 46=-59 (LC 13), 49=-1 (LC 20)
Max Grav 2=0 (LC 8), 24=125 (LC 24), 26=210 (LC 20), 27=83 (LC 20), 28=127 (LC 20), 29=118 (LC 20), 30=112 (LC 20), 31=120 (LC 20), 32=122 (LC 20), 33=118 (LC 20), 34=114 (LC 20), 35=137 (LC 20), 36=260 (LC 21), 37=133 (LC 19), 38=115 (LC 19), 39=117 (LC 19), 40=124 (LC 19), 41=116 (LC 19), 42=117 (LC 19), 43=109 (LC 19), 44=175 (LC 1), 45=100 (LC 8), 46=460 (LC 1), 49=0 (LC 8)

FORCES (lb) - Maximum Compression/Maximum Tension
TOP CHORD 1-2=0/28, 2-3=-207/259, 3-4=-154/218, 4-5=-103/220, 5-6=-61/205, 6-7=-34/192, 7-9=-103/196, 9-10=-141/204, 10-11=-177/230, 11-12=-219/280, 12-13=-241/306, 13-14=-241/306, 14-15=-219/280, 15-16=-177/235, 16-17=-141/224, 17-19=-103/215, 19-20=-103/220, 20-21=-129/233, 21-22=-156/247, 22-23=-181/254, 23-24=-236/284, 24-25=0/28
BOT CHORD 2-46=-241/273, 45-46=-241/273, 44-45=-241/273, 43-44=-241/273, 42-43=-241/273, 41-42=-241/273, 40-41=-242/274, 39-40=-242/274, 38-39=-242/274, 37-38=-242/274, 35-37=-242/274, 34-35=-242/274, 33-34=-242/274, 32-33=-242/274, 31-32=-242/274, 30-31=-240/272, 29-30=-240/272, 28-29=-240/272, 27-28=-240/272, 26-27=-240/272, 24-26=-240/272
WEBS 13-36=-234/130, 12-37=-107/45, 11-38=-110/89, 10-39=-99/77, 9-40=-105/79, 8-41=-100/80, 7-42=-95/71, 6-43=-100/79, 5-44=-105/75, 4-45=-86/87, 3-46=-158/96, 14-35=-110/48, 15-34=-110/88, 16-33=-99/77, 17-32=-104/80, 18-31=-101/78, 19-30=-94/72, 20-29=-100/78, 21-28=-102/78, 22-27=-87/70, 23-26=-144/102

NOTES
1) Unbalanced roof live loads have been considered for this design.
2) Wind: ASCE 7-10; Vult=130mph (3-second gust) Vasd=103mph; TCDL=6.0psf; BCDL=6.0psf; h=25ft; Cat. II; Exp C; Enclosed; MWFRS (envelope) exterior zone and C-C Exterior (2) zone; cantilever left and right exposed ; end vertical left and right exposed;C-C for members and forces & MWFRS for reactions shown; Lumber DOL=1.60 plate grip DOL=1.60
3) Truss designed for wind loads in the plane of the truss only. For studs exposed to wind (normal to the face), see Standard Industry Gable End Details as applicable, or consult qualified building designer as per ANSI/TPI 1.

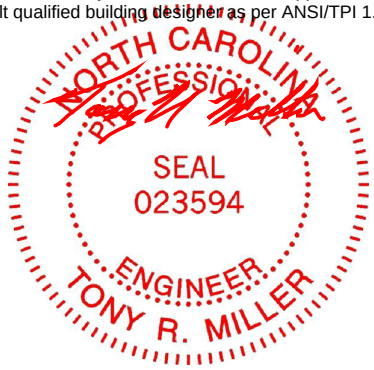

January 23,2025

Continued on page 2

WARNING - Verify design parameters and READ NOTES ON THIS AND INCLUDED MITEK REFERENCE PAGE MII-7473 rev. 1/2/2023 BEFORE USE.
Design valid for use only with MiTek® connectors. This design is based only upon parameters shown, and is for an individual building component, not a truss system. Before use, the building designer must verify the applicability of design parameters and properly incorporate this design into the overall building design. Bracing indicated is to prevent buckling of individual truss web and/or chord members only. Additional temporary and permanent bracing is always required for stability and to prevent collapse with possible personal injury and property damage. For general guidance regarding the fabrication, storage, delivery, erection and bracing of trusses and truss systems, see **ANSI/TPI1 Quality Criteria and DSB-22** available from Truss Plate Institute (www.tpinst.org) and **BCSI Building Component Safety Information** available from the Structural Building Component Association (www.sbcacomponents.com)

ENGINEERING BY TRENCO A MiTek Affiliate
818 Soundside Road
Edenton, NC 27932

4) All plates are 2x4 MT20 unless otherwise otherwise indicated.
5) Gable requires continuous bottom chord bearing.
6) Gable studs spaced at 1-4-0 oc.
7) This truss has been designed for a 10.0 psf bottom chord live load nonconcurrent with any other live loads.
8) * This truss has been designed for a live load of 20.0psf on the bottom chord in all areas where a rectangle 3-06-00 tall by 2-00-00 wide will fit between the bottom chord and any other members.
9) All bearings are assumed to be SP No.2 crushing capacity of 565 psi.
10) Provide mechanical connection (by others) of truss to bearing plate capable of withstanding 1 lb uplift at joint 2, 62 lb uplift at joint 24, 29 lb uplift at joint 37, 73 lb uplift at joint 38, 61 lb uplift at joint 39, 62 lb uplift at joint 40, 64 lb uplift at joint 41, 53 lb uplift at joint 42, 69 lb uplift at joint 43, 36 lb uplift at joint 44, 217 lb uplift at joint 45, 59 lb uplift at joint 46, 32 lb uplift at joint 35, 72 lb uplift at joint 34, 61 lb uplift at joint 33, 64 lb uplift at joint 32, 62 lb uplift at joint 31, 56 lb uplift at joint 30, 62 lb uplift at joint 29, 64 lb uplift at joint 28, 48 lb uplift at joint 27, 99 lb uplift at joint 26 and 1 lb uplift at joint 2.

LOAD CASE(S) Standard

WARNING - Verify design parameters and READ NOTES ON THIS AND INCLUDED MITEK REFERENCE PAGE MII-7473 rev. 1/2/2023 BEFORE USE.
Design valid for use only with MiTek® connectors. This design is based only upon parameters shown, and is for an individual building component, not a truss system. Before use, the building designer must verify the applicability of design parameters and properly incorporate this design into the overall building design. Bracing indicated is to prevent buckling of individual truss web and/or chord members only. Additional temporary and permanent bracing is always required for stability and to prevent collapse with possible personal injury and property damage. For general guidance regarding the fabrication, storage, delivery, erection and bracing of trusses and truss systems, see **ANSI/TPI1 Quality Criteria and DSB-22** available from Truss Plate Institute (www.tpinst.org) and **BCSI Building Component Safety Information** available from the Structural Building Component Association (www.sbcacomponents.com)

ENGINEERING BY TRENCO A MiTek Affiliate
818 Soundside Road
Edenton, NC 27932

Job	Truss	Truss Type	Qty	Ply	JSJ, Maplewood Prime B
4699682	A02	Common	5	1	I70935385 Job Reference (optional)

Builders FirstSource (Sumter, SC), Sumter, SC - 29153, Run: 8.63 S Sep 26 2024 Print: 8.630 S Sep 26 2024 MiTek Industries, Inc. Wed Jan 22 10:14:26 Page: 1
ID:xL?soJkaydZIkQQImzbAl2zmvBN-RfC?PsB70Hq3NSgPqnL8w3uITXbGKWrCDoi7J4zJC?f

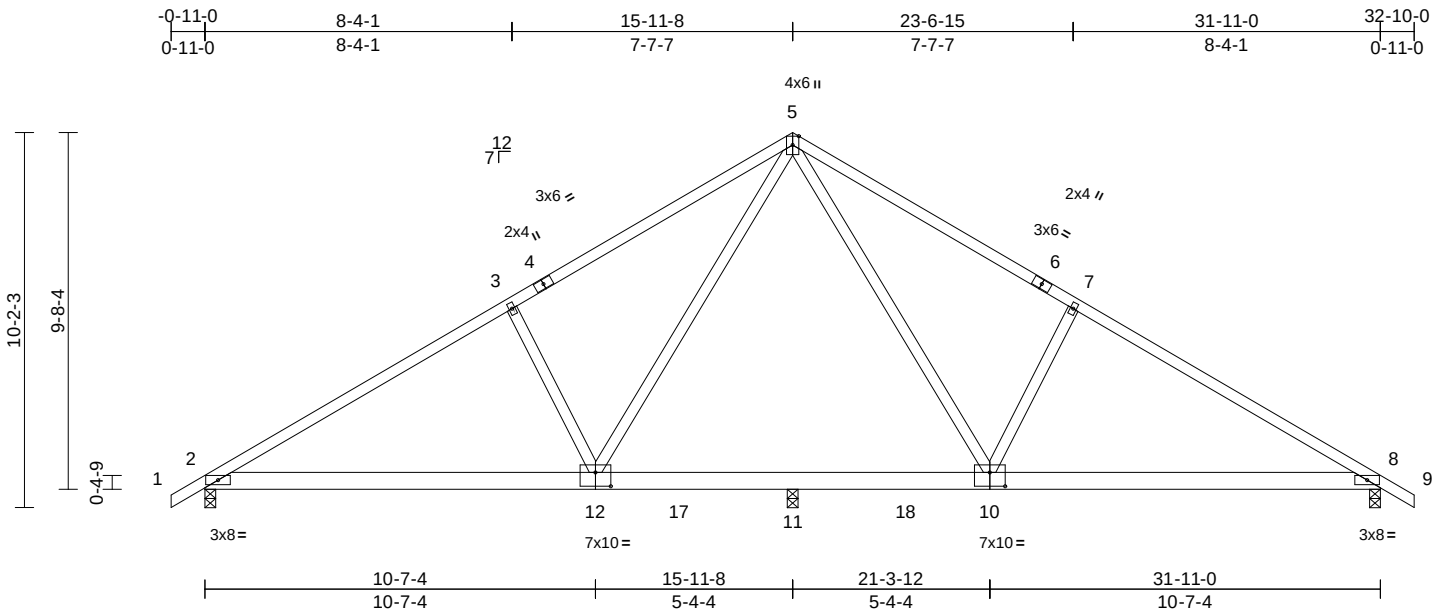

Scale = 1:62.6

Plate Offsets (X, Y): [10:0-5-0,0-4-8], [12:0-5-0,0-4-8]

Loading	(psf)	Spacing	2-0-0	CSI		DEFL	in	(loc)	l/defl	L/d	PLATES	GRIP
TCLL (roof)	20.0	Plate Grip DOL	1.15	TC	0.84	Vert(LL)	-0.13	10-16	>999	360	MT20	244/190
TCDL	10.0	Lumber DOL	1.15	BC	0.72	Vert(CT)	-0.33	10-16	>584	240		
BCLL	0.0*	Rep Stress Incr	YES	WB	0.73	Horz(CT)	0.05	8	n/a	n/a		
BCDL	10.0	Code	IRC2015/TPI2014	Matrix-MS		Wind(LL)	0.19	12-14	>999	240	Weight: 179 lb	FT = 20%

LUMBER
TOP CHORD 2x4 SP No.2
BOT CHORD 2x6 SP No.2
WEBS 2x4 SP No.3

BRACING
TOP CHORD Structural wood sheathing directly applied.
BOT CHORD Rigid ceiling directly applied or 9-10-6 oc bracing.

REACTIONS (size) 2=0-3-8, 8=0-3-8, 11=0-3-8
Max Horiz 2=328 (LC 11)
Max Uplift 2=-359 (LC 12), 8=-362 (LC 13)
Max Grav 2=1246 (LC 1), 8=1246 (LC 1), 11=318 (LC 19)

FORCES (lb) - Maximum Compression/Maximum Tension
TOP CHORD 1-2=0/28, 2-3=-1854/673, 3-5=-1804/750, 5-7=-1803/749, 7-8=-1854/673, 8-9=0/28
BOT CHORD 2-11=-504/1630, 8-11=-418/1519
WEBS 5-12=-328/790, 3-12=-563/428, 5-10=-332/789, 7-10=-563/428

NOTES
1) Unbalanced roof live loads have been considered for this design.
2) Wind: ASCE 7-10; Vult=130mph (3-second gust) Vasd=103mph; TCDL=6.0psf; BCDL=6.0psf; h=25ft; Cat. II; Exp C; Enclosed; MWFRS (envelope) exterior zone and C-C Exterior (2) zone; cantilever left and right exposed ; end vertical left and right exposed;C-C for members and forces & MWFRS for reactions shown; Lumber DOL=1.60 plate grip DOL=1.60
3) This truss has been designed for a 10.0 psf bottom chord live load nonconcurrent with any other live loads.
4) * This truss has been designed for a live load of 20.0psf on the bottom chord in all areas where a rectangle 3-06-00 tall by 2-00-00 wide will fit between the bottom chord and any other members, with BCDL = 10.0psf.
5) All bearings are assumed to be SP No.2 crushing capacity of 565 psi.
6) Provide mechanical connection (by others) of truss to bearing plate capable of withstanding 359 lb uplift at joint 2 and 362 lb uplift at joint 8.

LOAD CASE(S) Standard

January 23,2025

WARNING - Verify design parameters and READ NOTES ON THIS AND INCLUDED MITEK REFERENCE PAGE MII-7473 rev. 1/2/2023 BEFORE USE.
Design valid for use only with MiTek® connectors. This design is based only upon parameters shown, and is for an individual building component, not a truss system. Before use, the building designer must verify the applicability of design parameters and properly incorporate this design into the overall building design. Bracing indicated is to prevent buckling of individual truss web and/or chord members only. Additional temporary and permanent bracing is always required for stability and to prevent collapse with possible personal injury and property damage. For general guidance regarding the fabrication, storage, delivery, erection and bracing of trusses and truss systems, see **ANSI/TPI1 Quality Criteria and DSB-22** available from Truss Plate Institute (www.tpinst.org) and **BCSI Building Component Safety Information** available from the Structural Building Component Association (www.sbcacomponents.com)

ENGINEERING BY TRENCO A MiTek Affiliate
818 Soundside Road
Edenton, NC 27932

Job	Truss	Truss Type	Qty	Ply	JSJ, Maplewood Prime B
4699682	A03	Common	6	1	I70935386 Job Reference (optional)

Builders FirstSource (Sumter, SC), Sumter, SC - 29153,

Run: 8.63 S Sep 26 2024 Print: 8.630 S Sep 26 2024 MiTek Industries, Inc. Wed Jan 22 10:14:27 Page: 1
ID:1lF4K0acN8Ip2iTfaXpWJpzmv7h-RfC?PsB70Hq3NSgPqnL8w3uITXbGKWrCDoi7J4zJC?f

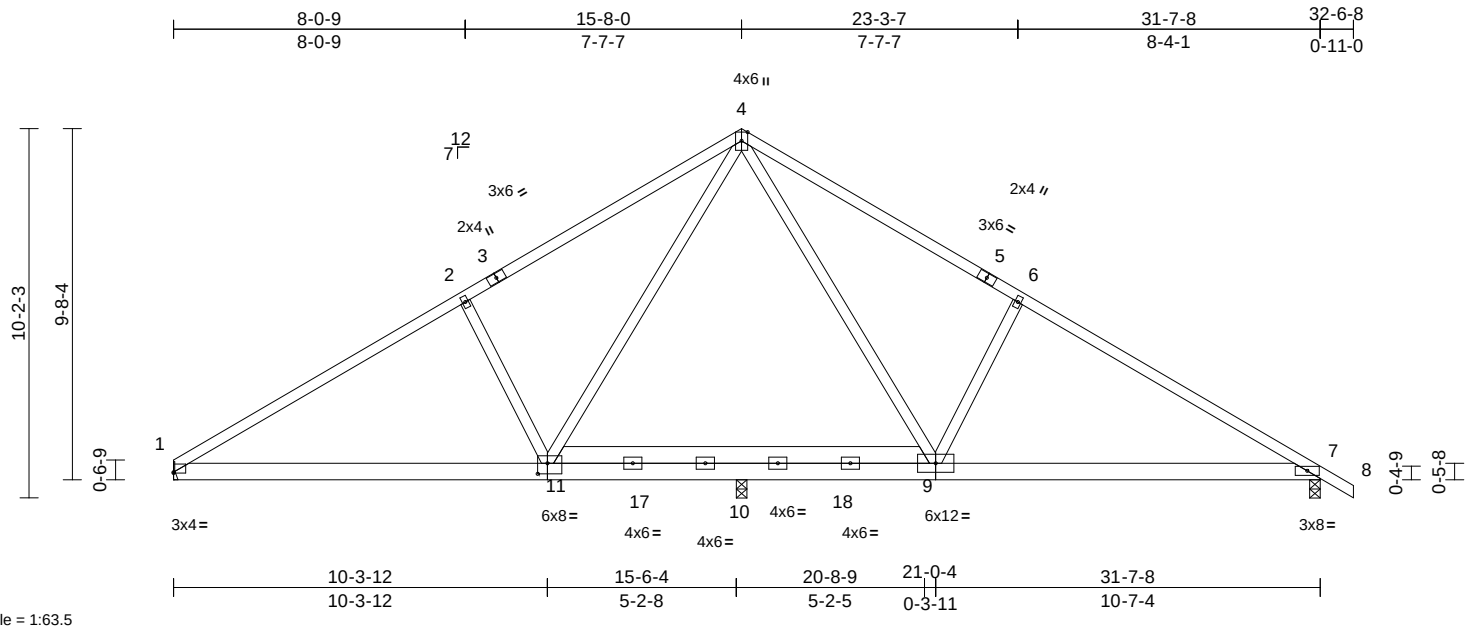

Scale = 1:63.5

Plate Offsets (X, Y): [1:Edge,0-0-4], [11:0-3-4,0-3-8]

Loading	(psf)	Spacing	2-0-0	CSI		DEFL	in	(loc)	l/defl	L/d	PLATES	GRIP
TCLL (roof)	20.0	Plate Grip DOL	1.15	TC	0.83	Vert(LL)	-0.12	9-16	>999	360	MT20	244/190
TCDL	10.0	Lumber DOL	1.15	BC	0.66	Vert(CT)	-0.29	9-16	>660	240		
BCLL	0.0*	Rep Stress Incr	YES	WB	0.61	Horz(CT)	0.04	7	n/a	n/a		
BCDL	10.0	Code	IRC2015/TPI2014	Matrix-MS		Wind(LL)	0.16	9-16	>999	240	Weight: 200 lb	FT = 20%

LUMBER
TOP CHORD 2x4 SP No.2
BOT CHORD 2x6 SP No.2
WEBS 2x4 SP No.3

BRACING
TOP CHORD Structural wood sheathing directly applied or 2-2-0 oc purlins.
BOT CHORD Rigid ceiling directly applied or 10-0-0 oc bracing.

REACTIONS (size) 1= Mechanical, 7=0-3-8, 10=0-3-8
Max Horiz 1=-322 (LC 8)
Max Uplift 1=-277 (LC 12), 7=-317 (LC 13), 10=-92 (LC 12)
Max Grav 1=1035 (LC 1), 7=1097 (LC 1), 10=565 (LC 19)

FORCES (lb) - Maximum Compression/Maximum Tension
TOP CHORD 1-2=-1579/550, 2-4=-1479/604, 4-6=-1526/616, 6-7=-1620/562, 7-8=0/28
BOT CHORD 1-10=-430/1412, 7-10=-324/1320
WEBS 4-11=-259/579, 2-11=-547/422, 4-9=-275/648, 6-9=-559/426

NOTES
1) Unbalanced roof live loads have been considered for this design.
2) Wind: ASCE 7-10; Vult=130mph (3-second gust) Vasd=103mph; TCDL=6.0psf; BCDL=6.0psf; h=25ft; Cat. II; Exp C; Enclosed; MWFRS (envelope) exterior zone and C-C Exterior (2) zone; cantilever left and right exposed ; end vertical left and right exposed;C-C for members and forces & MWFRS for reactions shown; Lumber DOL=1.60 plate grip DOL=1.60
3) This truss has been designed for a 10.0 psf bottom chord live load nonconcurrent with any other live loads.
4) * This truss has been designed for a live load of 20.0psf on the bottom chord in all areas where a rectangle 3-06-00 tall by 2-00-00 wide will fit between the bottom chord and any other members, with BCDL = 10.0psf.
5) Bearings are assumed to be: , Joint 10 SP No.2 crushing capacity of 565 psi, Joint 7 SP No.2 crushing capacity of 565 psi.
6) Refer to girder(s) for truss to truss connections.
7) Provide mechanical connection (by others) of truss to bearing plate capable of withstanding 277 lb uplift at joint 1, 317 lb uplift at joint 7 and 92 lb uplift at joint 10.

LOAD CASE(S) Standard

January 23,2025

WARNING - Verify design parameters and READ NOTES ON THIS AND INCLUDED MITEK REFERENCE PAGE MII-7473 rev. 1/2/2023 BEFORE USE.
Design valid for use only with MiTek® connectors. This design is based only upon parameters shown, and is for an individual building component, not a truss system. Before use, the building designer must verify the applicability of design parameters and properly incorporate this design into the overall building design. Bracing indicated is to prevent buckling of individual truss web and/or chord members only. Additional temporary and permanent bracing is always required for stability and to prevent collapse with possible personal injury and property damage. For general guidance regarding the fabrication, storage, delivery, erection and bracing of trusses and truss systems, see **ANSI/TPI1 Quality Criteria and DSB-22** available from Truss Plate Institute (www.tpinst.org) and **BCSI Building Component Safety Information** available from the Structural Building Component Association (www.sbcacomponents.com)

ENGINEERING BY TRENCO A MiTek Affiliate
818 Soundside Road
Edenton, NC 27932

Job	Truss	Truss Type	Qty	Ply	JSJ, Maplewood Prime B
4699682	A04	Common	6	1	I70935387 Job Reference (optional)

Builders FirstSource (Sumter, SC), Sumter, SC - 29153,

Run: 8.63 S Sep 26 2024 Print: 8.630 S Sep 26 2024 MiTek Industries, Inc. Wed Jan 22 10:14:27 Page: 1
ID:a?RYE_QyarRFH35tUSY9Utzmv5J-RfC?PsB70Hq3NSgPqnL8w3uITXbGKWrCDoi7J4zJC?f

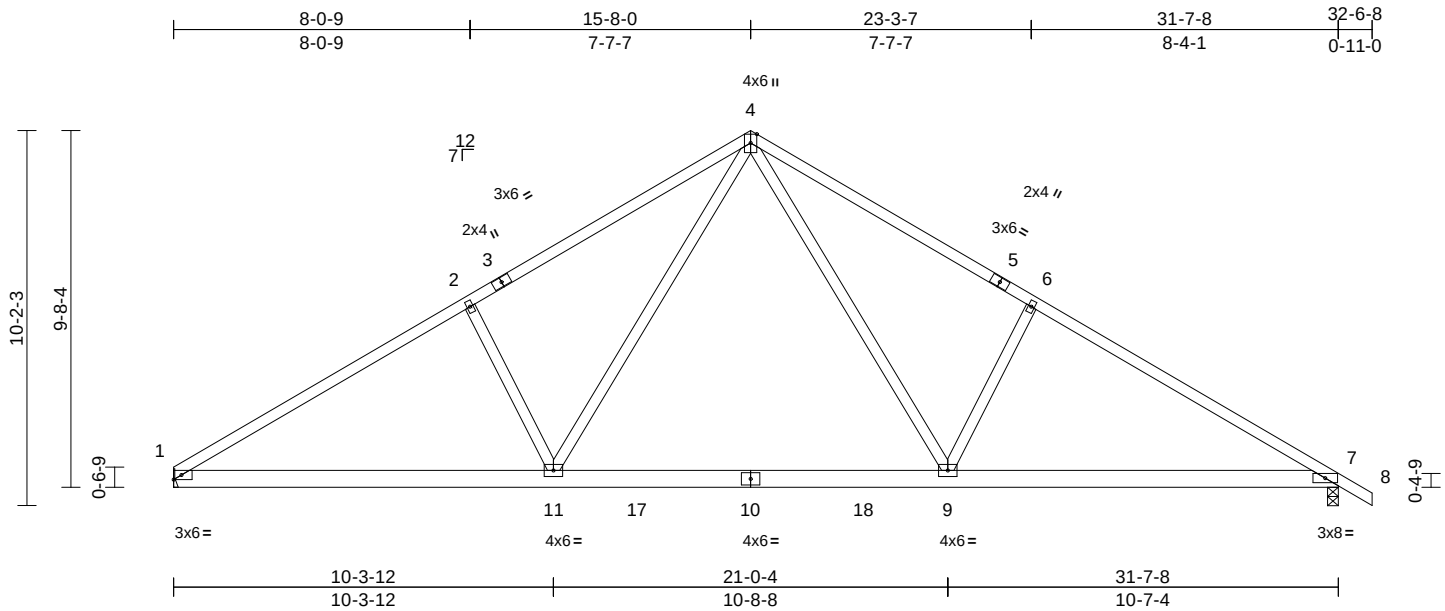

Scale = 1:62.6

Loading	(psf)	Spacing	2-0-0	CSI		DEFL	in	(loc)	l/defl	L/d	PLATES	GRIP
TCLL (roof)	20.0	Plate Grip DOL	1.15	TC	0.90	Vert(LL)	-0.20	9-11	>999	360	MT20	244/190
TCDL	10.0	Lumber DOL	1.15	BC	0.71	Vert(CT)	-0.30	9-11	>999	240		
BCLL	0.0*	Rep Stress Incr	YES	WB	0.72	Horz(CT)	0.05	7	n/a	n/a		
BCDL	10.0	Code	IRC2015/TPI2014	Matrix-MS		Wind(LL)	0.16	9-16	>999	240	Weight: 176 lb	FT = 20%

LUMBER
TOP CHORD 2x4 SP No.2
BOT CHORD 2x6 SP No.2
WEBS 2x4 SP No.3

BRACING
TOP CHORD Structural wood sheathing directly applied.
BOT CHORD Rigid ceiling directly applied or 10-0-0 oc bracing.

REACTIONS (size) 1= Mechanical, 7=0-3-8
Max Horiz 1=-322 (LC 8)
Max Uplift 1=-323 (LC 12), 7=-357 (LC 13)
Max Grav 1=1287 (LC 19), 7=1344 (LC 20)

FORCES (lb) - Maximum Compression/Maximum Tension
TOP CHORD 1-2=-2025/668, 2-4=-1927/744, 4-6=-1973/756, 6-7=-2068/679, 7-8=0/28
BOT CHORD 1-11=-490/1881, 9-11=-148/1205, 7-9=-424/1678
WEBS 4-11=-314/914, 2-11=-543/423, 4-9=-329/984, 6-9=-558/428

NOTES
1) Unbalanced roof live loads have been considered for this design.
2) Wind: ASCE 7-10; Vult=130mph (3-second gust) Vasd=103mph; TCDL=6.0psf; BCDL=6.0psf; h=25ft; Cat. II; Exp C; Enclosed; MWFRS (envelope) exterior zone and C-C Exterior (2) zone; cantilever left and right exposed ; end vertical left and right exposed;C-C for members and forces & MWFRS for reactions shown; Lumber DOL=1.60 plate grip DOL=1.60
3) This truss has been designed for a 10.0 psf bottom chord live load nonconcurrent with any other live loads.
4) * This truss has been designed for a live load of 20.0psf on the bottom chord in all areas where a rectangle 3-06-00 tall by 2-00-00 wide will fit between the bottom chord and any other members, with BCDL = 10.0psf.
5) Bearings are assumed to be: , Joint 7 SP No.2 crushing capacity of 565 psi.
6) Refer to girder(s) for truss to truss connections.
7) Provide mechanical connection (by others) of truss to bearing plate capable of withstanding 323 lb uplift at joint 1 and 357 lb uplift at joint 7.

LOAD CASE(S) Standard

January 23,2025

WARNING - Verify design parameters and READ NOTES ON THIS AND INCLUDED MITEK REFERENCE PAGE MII-7473 rev. 1/2/2023 BEFORE USE.
Design valid for use only with MiTek® connectors. This design is based only upon parameters shown, and is for an individual building component, not a truss system. Before use, the building designer must verify the applicability of design parameters and properly incorporate this design into the overall building design. Bracing indicated is to prevent buckling of individual truss web and/or chord members only. Additional temporary and permanent bracing is always required for stability and to prevent collapse with possible personal injury and property damage. For general guidance regarding the fabrication, storage, delivery, erection and bracing of trusses and truss systems, see **ANSI/TPI1 Quality Criteria and DSB-22** available from Truss Plate Institute (www.tpinst.org) and **BCSI Building Component Safety Information** available from the Structural Building Component Association (www.sbcacomponents.com)

ENGINEERING BY TRENCO A MiTek Affiliate
818 Soundside Road
Edenton, NC 27932

Job	Truss	Truss Type	Qty	Ply	JSJ, Maplewood Prime B
4699682	A05	Common Supported Gable	1	1	I70935388 Job Reference (optional)

Builders FirstSource (Sumter, SC), Sumter, SC - 29153,

Run: 8.63 S Sep 26 2024 Print: 8.630 S Sep 26 2024 MiTek Industries, Inc. Wed Jan 22 10:14:27 Page: 1
ID:8W9RimTznmkG21WMuR4oqWzmv2g-RfC?PsB70Hq3NSgPqnL8w3uITXbGKWrCDoi7J4zJC?f

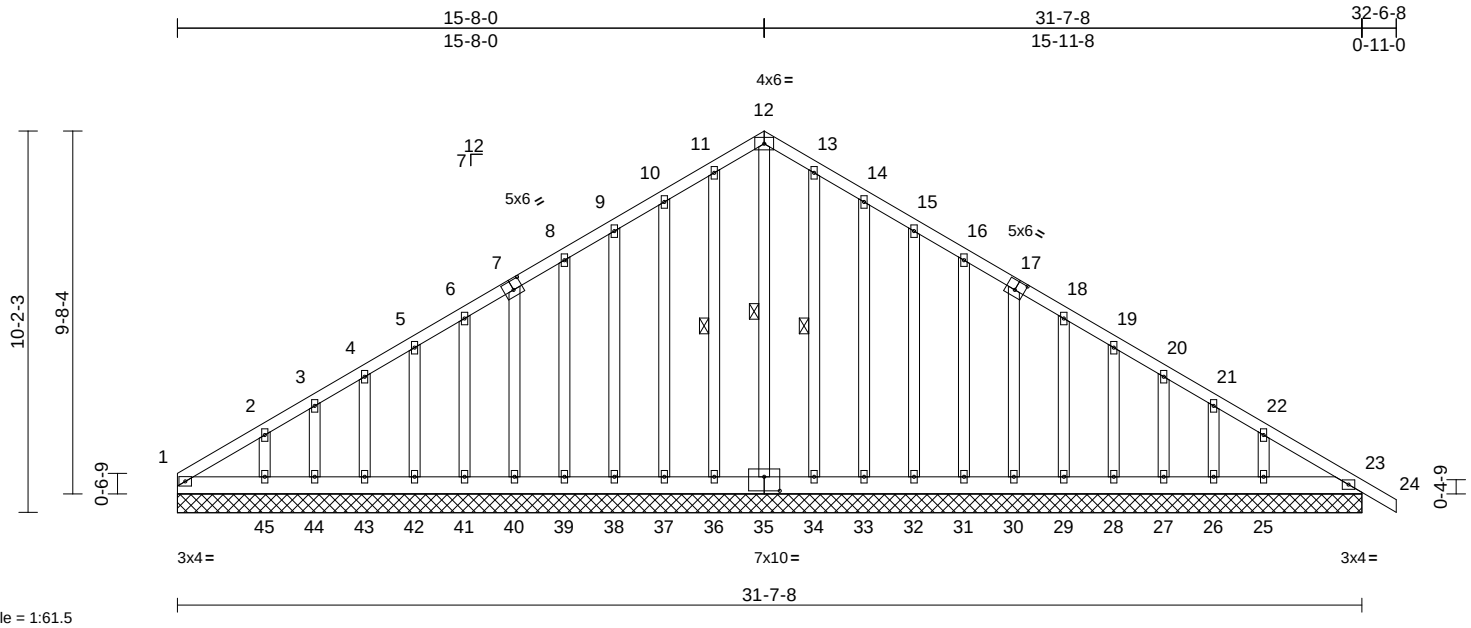

Scale = 1:61.5

Plate Offsets (X, Y): [7:0-3-0,0-3-0], [17:0-3-0,0-3-0], [35:0-5-0,0-4-8]

Loading	(psf)	Spacing	2-0-0	CSI		DEFL	in	(loc)	l/defl	L/d	PLATES	GRIP
TCLL (roof)	20.0	Plate Grip DOL	1.15	TC	0.08	Vert(LL)	n/a	-	n/a	999	MT20	244/190
TCDL	10.0	Lumber DOL	1.15	BC	0.05	Vert(CT)	n/a	-	n/a	999		
BCLL	0.0*	Rep Stress Incr	YES	WB	0.12	Horz(CT)	0.01	23	n/a	n/a		
BCDL	10.0	Code	IRC2015/TPI2014	Matrix-MS							Weight: 283 lb	FT = 20%

LUMBER
TOP CHORD 2x4 SP No.2
BOT CHORD 2x6 SP No.2
OTHERS 2x4 SP No.3

BRACING
TOP CHORD Structural wood sheathing directly applied or 6-0-0 oc purlins.
BOT CHORD Rigid ceiling directly applied or 10-0-0 oc bracing.
WEBS 1 Row at midpt 12-35, 11-36, 13-34

REACTIONS (size) 1=31-7-8, 23=31-7-8, 25=31-7-8, 26=31-7-8, 27=31-7-8, 28=31-7-8, 29=31-7-8, 30=31-7-8, 31=31-7-8, 32=31-7-8, 33=31-7-8, 34=31-7-8, 35=31-7-8, 36=31-7-8, 37=31-7-8, 38=31-7-8, 39=31-7-8, 40=31-7-8, 41=31-7-8, 42=31-7-8, 43=31-7-8, 44=31-7-8, 45=31-7-8, 46=31-7-8
Max Horiz 1=-322 (LC 8), 46=-322 (LC 8)
Max Uplift 1=-69 (LC 10), 23=-9 (LC 9), 25=-99 (LC 13), 26=-48 (LC 13), 27=-64 (LC 13), 28=-62 (LC 13), 29=-56 (LC 13), 30=-62 (LC 13), 31=-64 (LC 13), 32=-61 (LC 13), 33=-73 (LC 13), 34=-30 (LC 13), 36=-38 (LC 12), 37=-70 (LC 12), 38=-61 (LC 12), 39=-64 (LC 12), 40=-62 (LC 12), 41=-56 (LC 12), 42=-60 (LC 12), 43=-69 (LC 12), 44=-28 (LC 12), 45=-145 (LC 12), 46=-69 (LC 10)
Max Grav 1=152 (LC 20), 23=161 (LC 1), 25=214 (LC 20), 26=80 (LC 20), 27=128 (LC 20), 28=117 (LC 20), 29=114 (LC 20), 30=119 (LC 20), 31=122 (LC 20), 32=118 (LC 20), 33=121 (LC 20), 34=116 (LC 20), 35=206 (LC 13), 36=124 (LC 19), 37=118 (LC 19), 38=118 (LC 19), 39=123 (LC 19), 40=118 (LC 19), 41=114 (LC 19), 42=117 (LC 19), 43=129 (LC 19), 44=75 (LC 1), 45=229 (LC 19), 46=152 (LC 20)

FORCES (lb) - Maximum Compression/Maximum Tension
TOP CHORD 1-2=-287/224, 2-3=-221/193, 3-4=-195/181, 4-5=-169/163, 5-6=-155/151, 6-8=-143/170, 8-9=-140/198, 9-10=-177/224, 10-11=-218/256, 11-12=-240/284, 12-13=-240/284, 13-14=-218/256, 14-15=-177/207, 15-16=-140/163, 16-18=-102/117, 18-19=-66/61, 19-20=-78/69, 20-21=-115/86, 21-22=-158/99, 22-23=-221/156, 23-24=0/28
BOT CHORD 1-45=-170/261, 44-45=-170/261, 43-44=-170/261, 42-43=-170/261, 41-42=-170/261, 40-41=-170/261, 39-40=-172/261, 38-39=-172/261, 37-38=-172/261, 36-37=-172/261, 34-36=-172/261, 33-34=-172/261, 32-33=-172/261, 31-32=-172/261, 30-31=-172/261, 29-30=-170/260, 28-29=-170/260, 27-28=-170/260, 26-27=-170/260, 25-26=-170/260, 23-25=-170/260
WEBS 12-35=-199/130, 11-36=-97/54, 10-37=-110/86, 9-38=-99/77, 8-39=-104/80, 7-40=-100/78, 6-41=-94/72, 5-42=-100/78, 4-43=-102/79, 3-44=-87/67, 2-45=-140/108, 13-34=-89/46, 14-33=-110/89, 15-32=-99/77, 16-31=-104/80, 17-30=-100/78, 18-29=-94/72, 19-28=-100/78, 20-27=-102/78, 21-26=-87/70, 22-25=-144/102

NOTES
1) Unbalanced roof live loads have been considered for this design.
2) Wind: ASCE 7-10; Vult=130mph (3-second gust) Vasd=103mph; TCDL=6.0psf; BCDL=6.0psf; h=25ft; Cat. II; Exp C; Enclosed; MWFRS (envelope) exterior zone and C-C Exterior (2) zone; cantilever left and right exposed ; end vertical left and right exposed;C-C for members and forces & MWFRS for reactions shown; Lumber DOL=1.60 plate grip DOL=1.60
3) Truss designed for wind loads in the plane of the truss only. For studs exposed to wind (normal to the face), see Standard Industry Gable End Details as applicable, or consult qualified building designer as per ANSI/TPI 1.

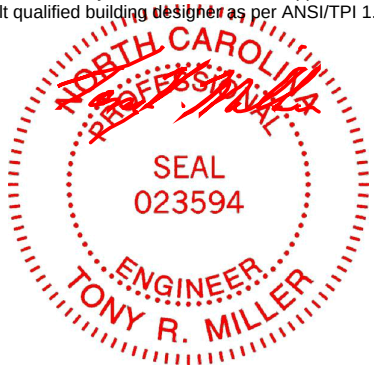

January 23,2025

Continued on page 2

WARNING - Verify design parameters and READ NOTES ON THIS AND INCLUDED MITEK REFERENCE PAGE MII-7473 rev. 1/2/2023 BEFORE USE.
Design valid for use only with MiTek® connectors. This design is based only upon parameters shown, and is for an individual building component, not a truss system. Before use, the building designer must verify the applicability of design parameters and properly incorporate this design into the overall building design. Bracing indicated is to prevent buckling of individual truss web and/or chord members only. Additional temporary and permanent bracing is always required for stability and to prevent collapse with possible personal injury and property damage. For general guidance regarding the fabrication, storage, delivery, erection and bracing of trusses and truss systems, see **ANSI/TPI1 Quality Criteria and DSB-22** available from Truss Plate Institute (www.tpinst.org) and **BCSI Building Component Safety Information** available from the Structural Building Component Association (www.sbcacomponents.com)

ENGINEERING BY TRENCO A MiTek Affiliate
818 Soundside Road
Edenton, NC 27932

4) All plates are 2x4 MT20 unless otherwise otherwise indicated.
5) Gable requires continuous bottom chord bearing.
6) Gable studs spaced at 1-4-0 oc.
7) This truss has been designed for a 10.0 psf bottom chord live load nonconcurrent with any other live loads.
8) * This truss has been designed for a live load of 20.0psf on the bottom chord in all areas where a rectangle 3-06-00 tall by 2-00-00 wide will fit between the bottom chord and any other members.
9) All bearings are assumed to be SP No.2 crushing capacity of 565 psi.
10) Provide mechanical connection (by others) of truss to bearing plate capable of withstanding 69 lb uplift at joint 1, 38 lb uplift at joint 36, 70 lb uplift at joint 37, 61 lb uplift at joint 38, 64 lb uplift at joint 39, 62 lb uplift at joint 40, 56 lb uplift at joint 41, 60 lb uplift at joint 42, 69 lb uplift at joint 43, 28 lb uplift at joint 44, 145 lb uplift at joint 45, 30 lb uplift at joint 34, 73 lb uplift at joint 33, 61 lb uplift at joint 32, 64 lb uplift at joint 31, 62 lb uplift at joint 30, 56 lb uplift at joint 29, 62 lb uplift at joint 28, 64 lb uplift at joint 27, 48 lb uplift at joint 26, 99 lb uplift at joint 25, 9 lb uplift at joint 23 and 69 lb uplift at joint 1.
11) Beveled plate or shim required to provide full bearing surface with truss chord at joint(s) 1, 46.

LOAD CASE(S) Standard

WARNING - Verify design parameters and READ NOTES ON THIS AND INCLUDED MITEK REFERENCE PAGE MII-7473 rev. 1/2/2023 BEFORE USE.
Design valid for use only with MiTek® connectors. This design is based only upon parameters shown, and is for an individual building component, not a truss system. Before use, the building designer must verify the applicability of design parameters and properly incorporate this design into the overall building design. Bracing indicated is to prevent buckling of individual truss web and/or chord members only. Additional temporary and permanent bracing is always required for stability and to prevent collapse with possible personal injury and property damage. For general guidance regarding the fabrication, storage, delivery, erection and bracing of trusses and truss systems, see **ANSI/TPI1 Quality Criteria and DSB-22** available from Truss Plate Institute (www.tpinst.org) and **BCSI Building Component Safety Information** available from the Structural Building Component Association (www.sbcacomponents.com)

ENGINEERING BY TRENCO A MiTek Affiliate
818 Soundside Road
Edenton, NC 27932

Job	Truss	Truss Type	Qty	Ply	JSJ, Maplewood Prime B
4699682	B01	Common Supported Gable	1	1	Job Reference (optional) I70935389

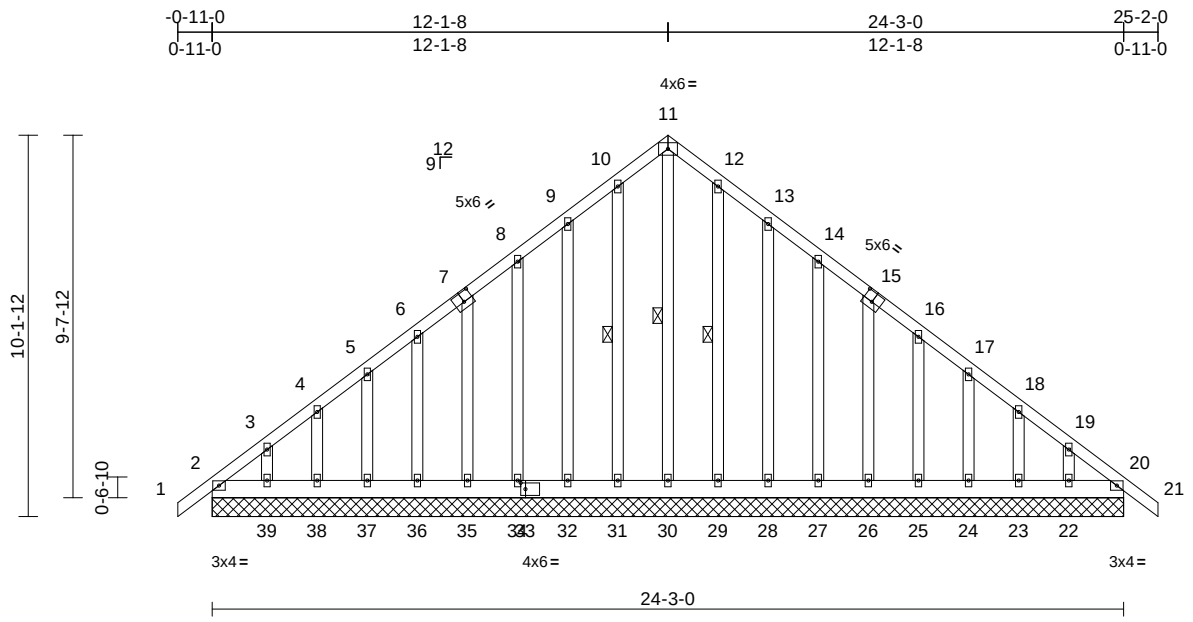

Scale = 1:61.3

Plate Offsets (X, Y): [7:0-3-0,0-3-0], [15:0-3-0,0-3-0], [33:0-1-8,0-2-0]

Loading	(psf)	Spacing	2-0-0	CSI		DEFL	in	(loc)	l/defl	L/d	PLATES	GRIP
TCLL (roof)	20.0	Plate Grip DOL	1.15	TC	0.08	Vert(LL)	n/a	-	n/a	999	MT20	244/190
TCDL	10.0	Lumber DOL	1.15	BC	0.05	Vert(CT)	n/a	-	n/a	999		
BCLL	0.0*	Rep Stress Incr	YES	WB	0.12	Horz(CT)	0.01	20	n/a	n/a		
BCDL	10.0	Code	IRC2015/TPI2014	Matrix-MS							Weight: 224 lb	FT = 20%

LUMBER
TOP CHORD 2x4 SP No.2
BOT CHORD 2x6 SP No.2
OTHERS 2x4 SP No.3

BRACING
TOP CHORD Structural wood sheathing directly applied or 6-0-0 oc purlins.
BOT CHORD Rigid ceiling directly applied or 10-0-0 oc bracing.
WEBS 1 Row at midpt 11-30, 10-31, 12-29

REACTIONS (size) 2=24-3-0, 20=24-3-0, 22=24-3-0, 23=24-3-0, 24=24-3-0, 25=24-3-0, 26=24-3-0, 27=24-3-0, 28=24-3-0, 29=24-3-0, 30=24-3-0, 31=24-3-0, 32=24-3-0, 34=24-3-0, 35=24-3-0, 36=24-3-0, 37=24-3-0, 38=24-3-0, 39=24-3-0, 40=24-3-0, 43=24-3-0
Max Horiz 2=-326 (LC 10), 40=-326 (LC 10)
Max Uplift 2=-92 (LC 8), 20=-42 (LC 9), 22=-109 (LC 13), 23=-68 (LC 13), 24=-81 (LC 13), 25=-64 (LC 13), 26=-78 (LC 13), 27=-82 (LC 13), 28=-88 (LC 13), 29=-45 (LC 13), 31=-52 (LC 12), 32=-86 (LC 12), 34=-83 (LC 12), 35=-78 (LC 12), 36=-64 (LC 12), 37=-81 (LC 12), 38=-66 (LC 12), 39=-116 (LC 12), 40=-92 (LC 8), 43=-42 (LC 9)
Max Grav 2=194 (LC 21), 20=167 (LC 22), 22=132 (LC 20), 23=120 (LC 20), 24=125 (LC 20), 25=112 (LC 20), 26=123 (LC 20), 27=130 (LC 20), 28=124 (LC 20), 29=120 (LC 20), 30=222 (LC 13), 31=128 (LC 19), 32=122 (LC 19), 34=130 (LC 19), 35=123 (LC 19), 36=112 (LC 19), 37=126 (LC 19), 38=118 (LC 19), 39=139 (LC 19), 40=194 (LC 21), 43=167 (LC 22)

FORCES (lb) - Maximum Compression/Maximum Tension
TOP CHORD 1-2=0/33, 2-3=-338/227, 3-4=-276/203, 4-5=-211/179, 5-6=-167/155, 6-8=-144/139, 8-9=-129/177, 9-10=-186/220, 10-11=-218/254, 11-12=-218/254, 12-13=-186/213, 13-14=-129/145, 14-16=-75/87, 16-17=-95/79, 17-18=-159/103, 18-19=-224/148, 19-20=-287/202, 20-21=0/33
BOT CHORD 2-39=-192/291, 38-39=-192/291, 37-38=-192/291, 36-37=-192/291, 35-36=-192/291, 34-35=-196/293, 32-34=-196/293, 31-32=-196/293, 30-31=-196/293, 29-30=-196/293, 28-29=-196/293, 27-28=-196/293, 26-27=-196/293, 25-26=-192/289, 24-25=-192/289, 23-24=-192/289, 22-23=-192/289, 20-22=-192/289
WEBS 11-30=-219/149, 10-31=-101/68, 9-32=-122/102, 8-34=-120/99, 7-35=-112/94, 6-36=-99/81, 5-37=-114/95, 4-38=-112/92, 3-39=-116/92, 12-29=-93/61, 13-28=-122/104, 14-27=-120/99, 15-26=-112/94, 16-25=-99/81, 17-24=-114/95, 18-23=-112/93, 19-22=-116/91

NOTES
1) Unbalanced roof live loads have been considered for this design.
2) Wind: ASCE 7-10; Vult=130mph (3-second gust) Vasd=103mph; TCDL=6.0psf; BCDL=6.0psf; h=25ft; Cat. II; Exp C; Enclosed; MWFRS (envelope) exterior zone and C-C Exterior (2) zone; cantilever left and right exposed ; end vertical left and right exposed;C-C for members and forces & MWFRS for reactions shown; Lumber DOL=1.60 plate grip DOL=1.60
3) Truss designed for wind loads in the plane of the truss only. For studs exposed to wind (normal to the face), see Standard Industry Gable End Details as applicable, or consult qualified building designer as per ANSI/TPI 1.
4) All plates are 2x4 MT20 unless otherwise indicated.
5) Gable requires continuous bottom chord bearing.
6) Gable studs spaced at 1-4-0 oc.
7) This truss has been designed for a 10.0 psf bottom chord live load nonconcurrent with any other live loads.
8) * This truss has been designed for a live load of 20.0psf on the bottom chord in all areas where a rectangle 3-06-00 tall by 2-00-00 wide will fit between the bottom chord and any other members.
9) All bearings are assumed to be SP No.2 crushing capacity of 565 psi.

January 23,2025

Continued on page 2

WARNING - Verify design parameters and READ NOTES ON THIS AND INCLUDED MITEK REFERENCE PAGE MII-7473 rev. 1/2/2023 BEFORE USE.
Design valid for use only with MiTek® connectors. This design is based only upon parameters shown, and is for an individual building component, not a truss system. Before use, the building designer must verify the applicability of design parameters and properly incorporate this design into the overall building design. Bracing indicated is to prevent buckling of individual truss web and/or chord members only. Additional temporary and permanent bracing is always required for stability and to prevent collapse with possible personal injury and property damage. For general guidance regarding the fabrication, storage, delivery, erection and bracing of trusses and truss systems, see **ANSI/TPI1 Quality Criteria and DSB-22** available from Truss Plate Institute (www.tpinst.org) and **BCSI Building Component Safety Information** available from the Structural Building Component Association (www.sbcacomponents.com)

ENGINEERING BY TRENCO A MiTek Affiliate
818 Soundside Road
Edenton, NC 27932

10) Provide mechanical connection (by others) of truss to bearing plate capable of withstanding 92 lb uplift at joint 2, 42 lb uplift at joint 20, 52 lb uplift at joint 31, 86 lb uplift at joint 32, 83 lb uplift at joint 34, 78 lb uplift at joint 35, 64 lb uplift at joint 36, 81 lb uplift at joint 37, 66 lb uplift at joint 38, 116 lb uplift at joint 39, 45 lb uplift at joint 29, 88 lb uplift at joint 28, 82 lb uplift at joint 27, 78 lb uplift at joint 26, 64 lb uplift at joint 25, 81 lb uplift at joint 24, 68 lb uplift at joint 23, 109 lb uplift at joint 22, 92 lb uplift at joint 2 and 42 lb uplift at joint 20.

LOAD CASE(S) Standard

WARNING - Verify design parameters and READ NOTES ON THIS AND INCLUDED MITEK REFERENCE PAGE MII-7473 rev. 1/2/2023 BEFORE USE.
Design valid for use only with MiTek® connectors. This design is based only upon parameters shown, and is for an individual building component, not a truss system. Before use, the building designer must verify the applicability of design parameters and properly incorporate this design into the overall building design. Bracing indicated is to prevent buckling of individual truss web and/or chord members only. Additional temporary and permanent bracing is always required for stability and to prevent collapse with possible personal injury and property damage. For general guidance regarding the fabrication, storage, delivery, erection and bracing of trusses and truss systems, see **ANSI/TPI1 Quality Criteria and DSB-22** available from Truss Plate Institute (www.tpinst.org) and **BCSI Building Component Safety Information** available from the Structural Building Component Association (www.sbcacomponents.com)

ENGINEERING BY TRENCO A MiTek Affiliate
818 Soundside Road
Edenton, NC 27932

Job	Truss	Truss Type	Qty	Ply	JSJ, Maplewood Prime B
4699682	B02	Common Girder	1	3	Job Reference (optional) I70935390

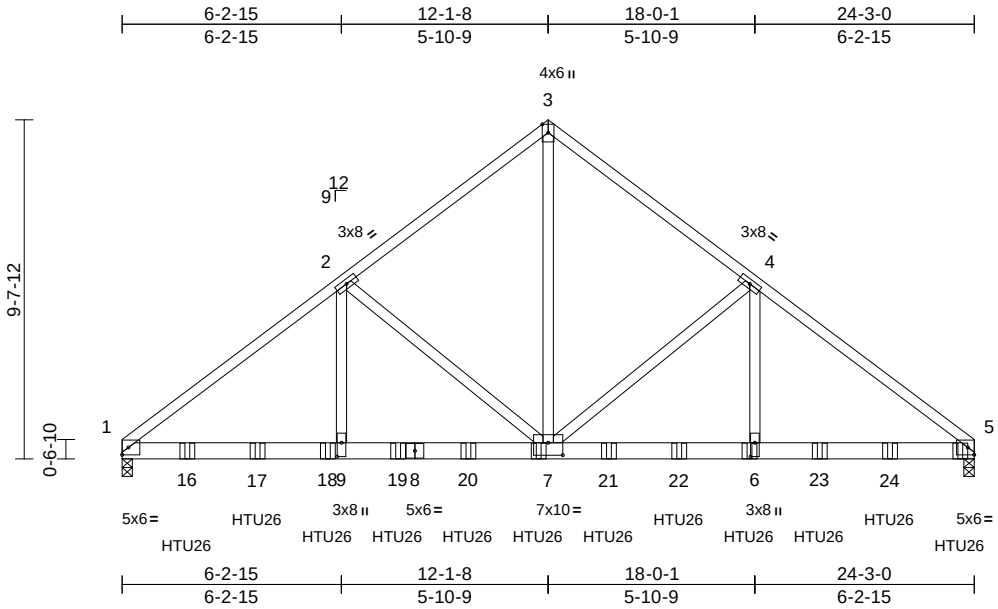

Plate Offsets (X, Y): [6:0-4-12,0-1-8], [7:0-5-0,0-4-4], [9:0-4-12,0-1-8]

Loading	(psf)	Spacing	2-0-0	CSI		DEFL	in	(loc)	l/defl	L/d	PLATES	GRIP
TCLL (roof)	20.0	Plate Grip DOL	1.15	TC	0.67	Vert(LL)	-0.10	7-9	>999	360	MT20	244/190
TCDL	10.0	Lumber DOL	1.15	BC	0.45	Vert(CT)	-0.20	7-9	>999	240		
BCLL	0.0*	Rep Stress Incr	NO	WB	0.63	Horz(CT)	0.04	5	n/a	n/a		
BCDL	10.0	Code	IRC2015/TPI2014	Matrix-MS		Wind(LL)	0.11	7-9	>999	240	Weight: 451 lb	FT = 20%

LUMBER
TOP CHORD 2x4 SP No.2
BOT CHORD 2x6 SP 2400F 2.0E or 2x6 SP DSS
WEBS 2x4 SP No.2

BRACING
TOP CHORD Structural wood sheathing directly applied or 6-0-0 oc purlins.
BOT CHORD Rigid ceiling directly applied or 10-0-0 oc bracing.

REACTIONS (size) 1=0-3-8, 5=0-3-8
Max Horiz 1=303 (LC 24)
Max Uplift 1=-2056 (LC 8), 5=-2152 (LC 9)
Max Grav 1=7658 (LC 1), 5=7841 (LC 1)

FORCES (lb) - Maximum Compression/Maximum Tension
TOP CHORD 1-2=-10256/2765, 2-3=-6803/1967, 3-4=-6803/1967, 4-5=-9677/2653
BOT CHORD 1-9=-2281/8286, 7-9=-2281/8286, 6-7=-2021/7686, 5-6=-2021/7686
WEBS 3-7=-2155/7696, 4-7=-3028/1086, 4-6=-863/3279, 2-7=-3771/1202, 2-9=-1003/4098

NOTES
1) 3-ply truss to be connected together with 10d (0.131"x3") nails as follows:
Top chords connected as follows: 2x4 - 1 row at 0-9-0 oc.
Bottom chords connected as follows: 2x6 - 2 rows staggered at 0-5-0 oc.
Web connected as follows: 2x4 - 1 row at 0-9-0 oc.
2) All loads are considered equally applied to all plies, except if noted as front (F) or back (B) face in the LOAD CASE(S) section. Ply to ply connections have been provided to distribute only loads noted as (F) or (B), unless otherwise indicated.
3) Unbalanced roof live loads have been considered for this design.
4) Wind: ASCE 7-10; Vult=130mph (3-second gust) Vasd=103mph; TCDL=6.0psf; BCDL=6.0psf; h=25ft; Cat. II; Exp C; Enclosed; MWFRS (envelope) exterior zone; cantilever left and right exposed ; end vertical left and right exposed; Lumber DOL=1.60 plate grip DOL=1.60
5) This truss has been designed for a 10.0 psf bottom chord live load nonconcurrent with any other live loads.
6) * This truss has been designed for a live load of 20.0psf on the bottom chord in all areas where a rectangle 3-06-00 tall by 2-00-00 wide will fit between the bottom chord and any other members.
7) All bearings are assumed to be SP 2400F 2.0E or DSS crushing capacity of 660 psi.
8) Provide mechanical connection (by others) of truss to bearing plate capable of withstanding 2056 lb uplift at joint 1 and 2152 lb uplift at joint 5.
9) Use Simpson Strong-Tie HTU26 (10-16d Girder, 14-10dx1 1/2 Truss) or equivalent spaced at 2-0-0 oc max. starting at 1-10-4 from the left end to 23-10-4 to connect truss(es) to back face of bottom chord.
10) Fill all nail holes where hanger is in contact with lumber.

LOAD CASE(S) Standard
1) Dead + Roof Live (balanced): Lumber Increase=1.15, Plate Increase=1.15
Uniform Loads (lb/ft)
Vert: 1-3=-60, 10-13=-20, 3-5=-60
Concentrated Loads (lb)
Vert: 7=-1244 (B), 6=-1015 (B), 15=-1021 (B), 16=-1244 (B), 17=-1244 (B), 18=-1244 (B), 19=-1244 (B), 20=-1244 (B), 21=-1015 (B), 22=-1015 (B), 23=-1015 (B), 24=-1015 (B)

January 23,2025

WARNING - Verify design parameters and READ NOTES ON THIS AND INCLUDED MITEK REFERENCE PAGE MII-7473 rev. 1/2/2023 BEFORE USE.
Design valid for use only with MiTek® connectors. This design is based only upon parameters shown, and is for an individual building component, not a truss system. Before use, the building designer must verify the applicability of design parameters and properly incorporate this design into the overall building design. Bracing indicated is to prevent buckling of individual truss web and/or chord members only. Additional temporary and permanent bracing is always required for stability and to prevent collapse with possible personal injury and property damage. For general guidance regarding the fabrication, storage, delivery, erection and bracing of trusses and truss systems, see **ANSI/TPI1 Quality Criteria and DSB-22** available from Truss Plate Institute (www.tpinst.org) and **BCSI Building Component Safety Information** available from the Structural Building Component Association (www.sbcacomponents.com)

ENGINEERING BY TRENCO A MiTek Affiliate
818 Soundside Road
Edenton, NC 27932

Job	Truss	Truss Type	Qty	Ply	JSJ, Maplewood Prime B
4699682	C01	Monopitch Supported Gable	1	1	Job Reference (optional) I70935391

Builders FirstSource (Sumter, SC), Sumter, SC - 29153,

Run: 8.63 S Sep 26 2024 Print: 8.630 S Sep 26 2024 MiTek Industries, Inc. Wed Jan 22 10:14:27 Page: 1
ID:ZsIYMgvgUDmntnAb2AdYOizmuwM-RfC?PsB70Hq3NSgPqnL8w3uITXbGKWrCDoi7J4zJC?f

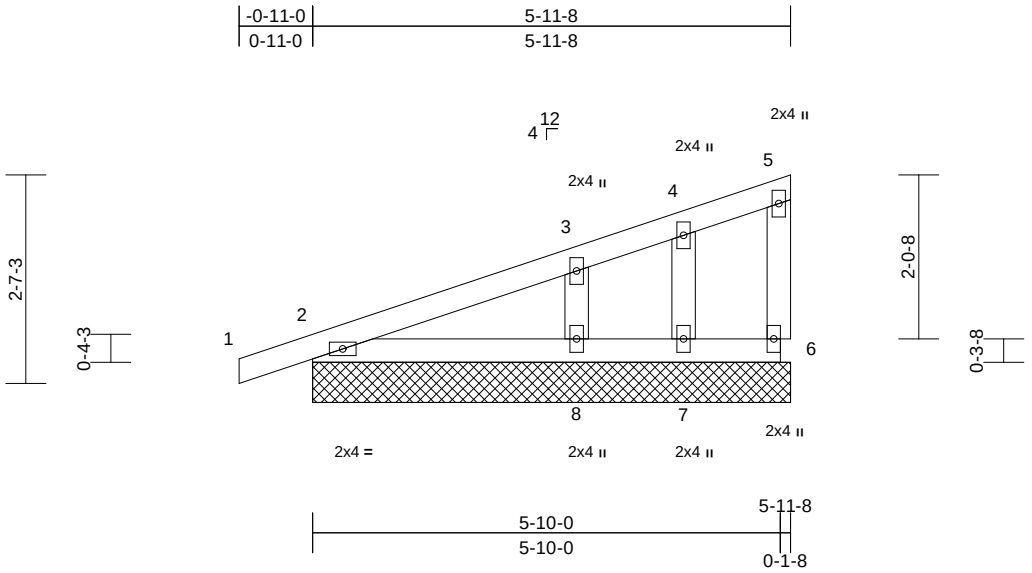

Scale = 1:28.7

Loading	(psf)	Spacing	2-0-0	CSI		DEFL	in	(loc)	l/defl	L/d	PLATES	GRIP
TCLL (roof)	20.0	Plate Grip DOL	1.15	TC	0.10	Vert(LL)	n/a	-	n/a	999	MT20	244/190
TCDL	10.0	Lumber DOL	1.15	BC	0.08	Vert(CT)	n/a	-	n/a	999		
BCLL	0.0*	Rep Stress Incr	YES	WB	0.06	Horz(CT)	0.00	2	n/a	n/a		
BCDL	10.0	Code	IRC2015/TPI2014	Matrix-MP							Weight: 25 lb	FT = 20%

LUMBER

TOP CHORD 2x4 SP No.2
BOT CHORD 2x4 SP No.2
WEBS 2x4 SP No.2
OTHERS 2x4 SP No.3

BRACING

TOP CHORD Structural wood sheathing directly applied or 5-11-8 oc purlins, except end verticals.
BOT CHORD Rigid ceiling directly applied or 10-0-0 oc bracing.

REACTIONS (size) 2=5-11-8, 6=5-11-8, 7=5-11-8, 8=5-11-8, 9=5-11-8
Max Horiz 2=122 (LC 8), 9=122 (LC 8)
Max Uplift 2=-73 (LC 8), 6=-21 (LC 12), 7=-23 (LC 8), 8=-108 (LC 12), 9=-73 (LC 8)
Max Grav 2=172 (LC 1), 6=49 (LC 1), 7=43 (LC 1), 8=255 (LC 1), 9=172 (LC 1)

FORCES (lb) - Maximum Compression/Maximum Tension
TOP CHORD 1-2=0/17, 2-3=-111/52, 3-4=-44/13, 4-5=-17/9, 5-6=-34/41
BOT CHORD 2-8=-30/54, 7-8=0/0, 6-7=0/0
WEBS 4-7=-46/67, 3-8=-167/185

NOTES

1) Wind: ASCE 7-10; Vult=130mph (3-second gust) Vasd=103mph; TCDL=6.0psf; BCDL=6.0psf; h=25ft; Cat. II; Exp C; Enclosed; MWFRS (envelope) exterior zone and C-C Exterior (2) zone; cantilever left and right exposed ; end vertical left exposed;C-C for members and forces & MWFRS for reactions shown; Lumber DOL=1.60 plate grip DOL=1.60
2) Truss designed for wind loads in the plane of the truss only. For studs exposed to wind (normal to the face), see Standard Industry Gable End Details as applicable, or consult qualified building designer as per ANSI/TPI 1.
3) Gable requires continuous bottom chord bearing.
4) Gable studs spaced at 1-4-0 oc.
5) This truss has been designed for a 10.0 psf bottom chord live load nonconcurrent with any other live loads.
6) * This truss has been designed for a live load of 20.0psf on the bottom chord in all areas where a rectangle 3-06-00 tall by 2-00-00 wide will fit between the bottom chord and any other members.
7) All bearings are assumed to be SP No.2 crushing capacity of 565 psi.
8) Provide mechanical connection (by others) of truss to bearing plate capable of withstanding 73 lb uplift at joint 2, 21 lb uplift at joint 6, 23 lb uplift at joint 7, 108 lb uplift at joint 8 and 73 lb uplift at joint 2.

LOAD CASE(S) Standard

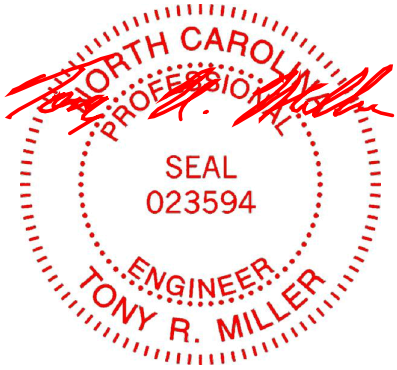

January 23,2025

WARNING - Verify design parameters and READ NOTES ON THIS AND INCLUDED MITEK REFERENCE PAGE MII-7473 rev. 1/2/2023 BEFORE USE.
Design valid for use only with MiTek® connectors. This design is based only upon parameters shown, and is for an individual building component, not a truss system. Before use, the building designer must verify the applicability of design parameters and properly incorporate this design into the overall building design. Bracing indicated is to prevent buckling of individual truss web and/or chord members only. Additional temporary and permanent bracing is always required for stability and to prevent collapse with possible personal injury and property damage. For general guidance regarding the fabrication, storage, delivery, erection and bracing of trusses and truss systems, see **ANSI/TPI1 Quality Criteria and DSB-22** available from Truss Plate Institute (www.tpinst.org) and **BCSI Building Component Safety Information** available from the Structural Building Component Association (www.sbcacomponents.com)

ENGINEERING BY TRENCO A MiTek Affiliate
818 Soundside Road
Edenton, NC 27932

Job	Truss	Truss Type	Qty	Ply	JSJ, Maplewood Prime B
4699682	C02	Monopitch	5	1	I70935392 Job Reference (optional)

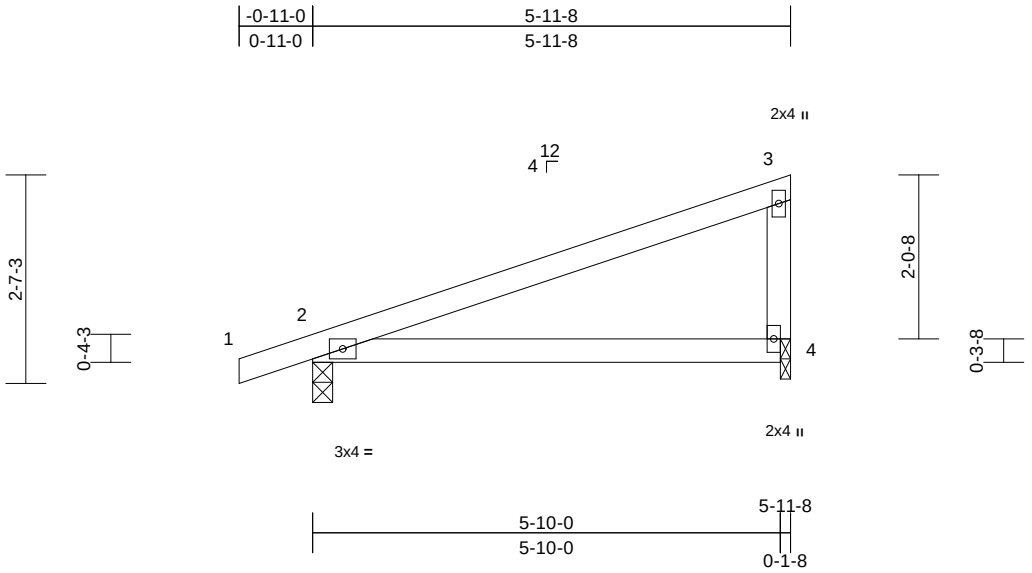

Scale = 1:28.7

Loading	(psf)	Spacing	2-0-0	CSI		DEFL	in	(loc)	l/defl	L/d	PLATES	GRIP
TCLL (roof)	20.0	Plate Grip DOL	1.15	TC	0.53	Vert(LL)	0.18	4-7	>385	240	MT20	244/190
TCDL	10.0	Lumber DOL	1.15	BC	0.53	Vert(CT)	-0.12	4-7	>591	240		
BCLL	0.0*	Rep Stress Incr	YES	WB	0.00	Horz(CT)	0.00	2	n/a	n/a		
BCDL	10.0	Code	IRC2015/TPI2014	Matrix-MP							Weight: 22 lb	FT = 20%

LUMBER
TOP CHORD 2x4 SP No.2
BOT CHORD 2x4 SP No.2
WEBS 2x4 SP No.2

BRACING
TOP CHORD Structural wood sheathing directly applied or 5-11-8 oc purlins, except end verticals.
BOT CHORD Rigid ceiling directly applied or 10-0-0 oc bracing.

REACTIONS (size) 2=0-3-0, 4=0-1-8
Max Horiz 2=122 (LC 8)
Max Uplift 2=-193 (LC 8), 4=-167 (LC 8)
Max Grav 2=292 (LC 1), 4=228 (LC 1)

FORCES (lb) - Maximum Compression/Maximum Tension
TOP CHORD 1-2=0/17, 2-3=-100/136, 3-4=-152/203
BOT CHORD 2-4=-190/101

NOTES
1) Wind: ASCE 7-10; Vult=130mph (3-second gust) Vasd=103mph; TCDL=6.0psf; BCDL=6.0psf; h=25ft; Cat. II; Exp C; Enclosed; MWFRS (envelope) exterior zone and C-C Exterior (2) zone; cantilever left and right exposed ; end vertical left exposed; porch left and right exposed;C-C for members and forces & MWFRS for reactions shown; Lumber DOL=1.60 plate grip DOL=1.60
2) This truss has been designed for a 10.0 psf bottom chord live load nonconcurrent with any other live loads.
3) * This truss has been designed for a live load of 20.0psf on the bottom chord in all areas where a rectangle 3-06-00 tall by 2-00-00 wide will fit between the bottom chord and any other members.
4) All bearings are assumed to be SP No.2 crushing capacity of 565 psi.
5) Bearing at joint(s) 4 considers parallel to grain value using ANSI/TPI 1 angle to grain formula. Building designer should verify capacity of bearing surface.
6) Provide mechanical connection (by others) of truss to bearing plate at joint(s) 4.
7) Provide mechanical connection (by others) of truss to bearing plate capable of withstanding 193 lb uplift at joint 2 and 167 lb uplift at joint 4.

LOAD CASE(S) Standard

January 23,2025

WARNING - Verify design parameters and READ NOTES ON THIS AND INCLUDED MITEK REFERENCE PAGE MII-7473 rev. 1/2/2023 BEFORE USE.
Design valid for use only with MiTek® connectors. This design is based only upon parameters shown, and is for an individual building component, not a truss system. Before use, the building designer must verify the applicability of design parameters and properly incorporate this design into the overall building design. Bracing indicated is to prevent buckling of individual truss web and/or chord members only. Additional temporary and permanent bracing is always required for stability and to prevent collapse with possible personal injury and property damage. For general guidance regarding the fabrication, storage, delivery, erection and bracing of trusses and truss systems, see **ANSI/TPI1 Quality Criteria and DSB-22** available from Truss Plate Institute (www.tpinst.org) and **BCSI Building Component Safety Information** available from the Structural Building Component Association (www.sbcacomponents.com)

ENGINEERING BY TRENCO A MiTek Affiliate
818 Soundside Road
Edenton, NC 27932

Job	Truss	Truss Type	Qty	Ply	JSJ, Maplewood Prime B
4699682	C03	Monopitch	12	1	I70935393 Job Reference (optional)

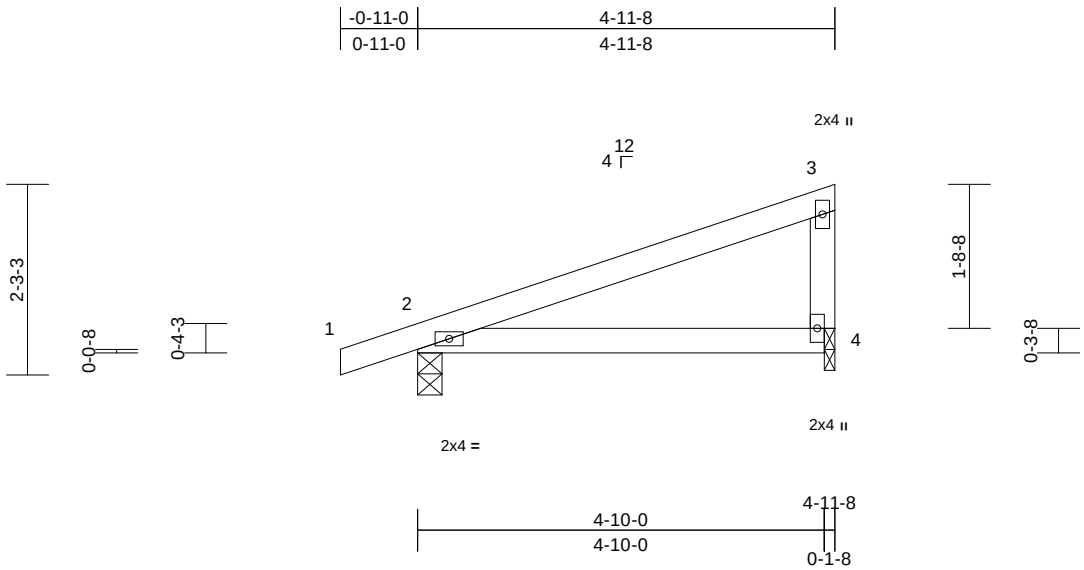

Scale = 1:27.4

Loading	(psf)	Spacing	2-0-0	CSI		DEFL	in	(loc)	l/defl	L/d	PLATES	GRIP
TCLL (roof)	20.0	Plate Grip DOL	1.15	TC	0.32	Vert(LL)	-0.02	4-7	>999	360	MT20	244/190
TCDL	10.0	Lumber DOL	1.15	BC	0.26	Vert(CT)	-0.05	4-7	>999	240		
BCLL	0.0*	Rep Stress Incr	YES	WB	0.00	Horz(CT)	0.00	2	n/a	n/a		
BCDL	10.0	Code	IRC2015/TPI2014	Matrix-MP		Wind(LL)	0.04	4-7	>999	240	Weight: 19 lb	FT = 20%

LUMBER
TOP CHORD 2x4 SP No.2
BOT CHORD 2x4 SP No.2
WEBS 2x4 SP No.2

BRACING
TOP CHORD Structural wood sheathing directly applied or 4-11-8 oc purlins, except end verticals.
BOT CHORD Rigid ceiling directly applied or 10-0-0 oc bracing.

REACTIONS (size) 2=0-3-8, 4=0-1-8
Max Horiz 2=105 (LC 8)
Max Uplift 2=-111 (LC 8), 4=-79 (LC 12)
Max Grav 2=253 (LC 1), 4=187 (LC 1)

FORCES (lb) - Maximum Compression/Maximum Tension
TOP CHORD 1-2=0/17, 2-3=-81/32, 3-4=-124/140
BOT CHORD 2-4=-65/98

NOTES
1) Wind: ASCE 7-10; Vult=130mph (3-second gust) Vasd=103mph; TCDL=6.0psf; BCDL=6.0psf; h=25ft; Cat. II; Exp C; Enclosed; MWFRS (envelope) exterior zone and C-C Exterior (2) zone; cantilever left and right exposed ; end vertical left exposed;C-C for members and forces & MWFRS for reactions shown; Lumber DOL=1.60 plate grip DOL=1.60
2) This truss has been designed for a 10.0 psf bottom chord live load nonconcurrent with any other live loads.
3) * This truss has been designed for a live load of 20.0psf on the bottom chord in all areas where a rectangle 3-06-00 tall by 2-00-00 wide will fit between the bottom chord and any other members.
4) All bearings are assumed to be SP No.2 crushing capacity of 565 psi.
5) Bearing at joint(s) 4 considers parallel to grain value using ANSI/TPI 1 angle to grain formula. Building designer should verify capacity of bearing surface.
6) Provide mechanical connection (by others) of truss to bearing plate at joint(s) 4.
7) Provide mechanical connection (by others) of truss to bearing plate capable of withstanding 111 lb uplift at joint 2 and 79 lb uplift at joint 4.

LOAD CASE(S) Standard

January 23,2025

WARNING - Verify design parameters and READ NOTES ON THIS AND INCLUDED MITEK REFERENCE PAGE MII-7473 rev. 1/2/2023 BEFORE USE.
Design valid for use only with MiTek® connectors. This design is based only upon parameters shown, and is for an individual building component, not a truss system. Before use, the building designer must verify the applicability of design parameters and properly incorporate this design into the overall building design. Bracing indicated is to prevent buckling of individual truss web and/or chord members only. Additional temporary and permanent bracing is always required for stability and to prevent collapse with possible personal injury and property damage. For general guidance regarding the fabrication, storage, delivery, erection and bracing of trusses and truss systems, see **ANSI/TPI1 Quality Criteria and DSB-22** available from Truss Plate Institute (www.tpinst.org) and **BCSI Building Component Safety Information** available from the Structural Building Component Association (www.sbcacomponents.com)

ENGINEERING BY TRENCO A MiTek Affiliate
818 Soundside Road
Edenton, NC 27932

Job	Truss	Truss Type	Qty	Ply	JSJ, Maplewood Prime B
4699682	C04	Monopitch Supported Gable	1	1	Job Reference (optional) I70935394

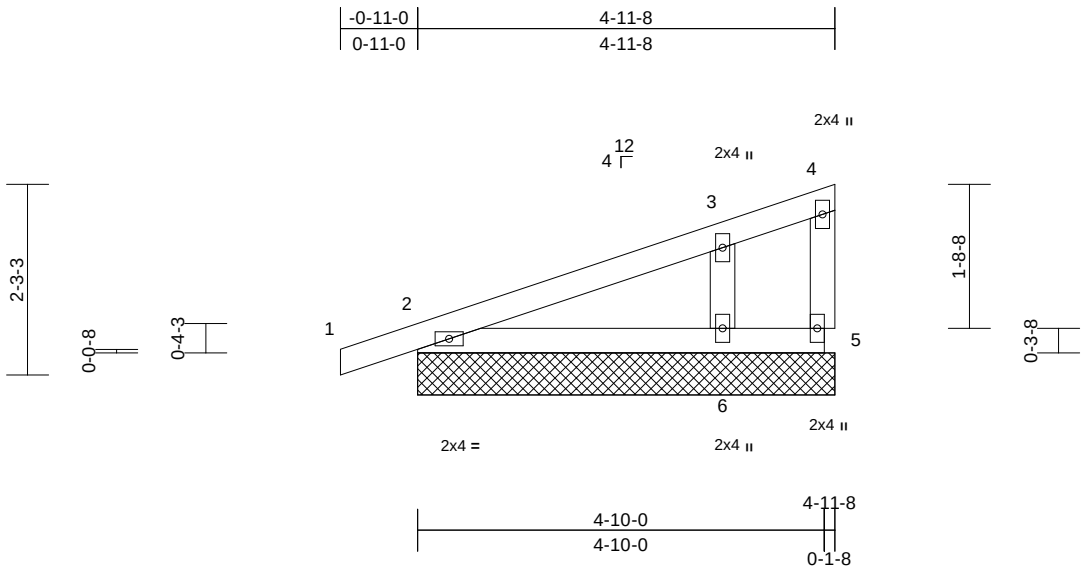

Scale = 1:27.4

Loading	(psf)	Spacing	2-0-0	CSI		DEFL	in	(loc)	l/defl	L/d	PLATES	GRIP
TCLL (roof)	20.0	Plate Grip DOL	1.15	TC	0.12	Vert(LL)	n/a	-	n/a	999	MT20	244/190
TCDL	10.0	Lumber DOL	1.15	BC	0.10	Vert(CT)	n/a	-	n/a	999		
BCLL	0.0*	Rep Stress Incr	YES	WB	0.06	Horz(CT)	0.00	2	n/a	n/a		
BCDL	10.0	Code	IRC2015/TPI2014	Matrix-MP							Weight: 20 lb	FT = 20%

LUMBER
TOP CHORD 2x4 SP No.2
BOT CHORD 2x4 SP No.2
WEBS 2x4 SP No.2
OTHERS 2x4 SP No.3

BRACING
TOP CHORD Structural wood sheathing directly applied or 4-11-8 oc purlins, except end verticals.
BOT CHORD Rigid ceiling directly applied or 10-0-0 oc bracing.

REACTIONS (size) 2=4-11-8, 5=4-11-8, 6=4-11-8, 7=4-11-8
Max Horiz 2=105 (LC 8), 7=105 (LC 8)
Max Uplift 2=-83 (LC 8), 5=-29 (LC 1), 6=-121 (LC 12), 7=-83 (LC 8)
Max Grav 2=182 (LC 1), 5=12 (LC 12), 6=287 (LC 1), 7=182 (LC 1)

FORCES (lb) - Maximum Compression/Maximum Tension
TOP CHORD 1-2=0/17, 2-3=-82/43, 3-4=-26/1, 4-5=-3/13
BOT CHORD 2-6=-31/59, 5-6=0/0
WEBS 3-6=-189/215

NOTES
1) Wind: ASCE 7-10; Vult=130mph (3-second gust) Vasd=103mph; TCDL=6.0psf; BCDL=6.0psf; h=25ft; Cat. II; Exp C; Enclosed; MWFRS (envelope) exterior zone and C-C Exterior (2) zone; cantilever left and right exposed ; end vertical left exposed;C-C for members and forces & MWFRS for reactions shown; Lumber DOL=1.60 plate grip DOL=1.60
2) Truss designed for wind loads in the plane of the truss only. For studs exposed to wind (normal to the face), see Standard Industry Gable End Details as applicable, or consult qualified building designer as per ANSI/TPI 1.
3) Gable requires continuous bottom chord bearing.
4) Gable studs spaced at 1-4-0 oc.
5) This truss has been designed for a 10.0 psf bottom chord live load nonconcurrent with any other live loads.
6) * This truss has been designed for a live load of 20.0psf on the bottom chord in all areas where a rectangle 3-06-00 tall by 2-00-00 wide will fit between the bottom chord and any other members.
7) All bearings are assumed to be SP No.2 crushing capacity of 565 psi.
8) Provide mechanical connection (by others) of truss to bearing plate capable of withstanding 83 lb uplift at joint 2, 29 lb uplift at joint 5, 121 lb uplift at joint 6 and 83 lb uplift at joint 2.

LOAD CASE(S) Standard

January 23,2025

WARNING - Verify design parameters and READ NOTES ON THIS AND INCLUDED MITEK REFERENCE PAGE MII-7473 rev. 1/2/2023 BEFORE USE.
Design valid for use only with MiTek® connectors. This design is based only upon parameters shown, and is for an individual building component, not a truss system. Before use, the building designer must verify the applicability of design parameters and properly incorporate this design into the overall building design. Bracing indicated is to prevent buckling of individual truss web and/or chord members only. Additional temporary and permanent bracing is always required for stability and to prevent collapse with possible personal injury and property damage. For general guidance regarding the fabrication, storage, delivery, erection and bracing of trusses and truss systems, see **ANSI/TPI1 Quality Criteria and DSB-22** available from Truss Plate Institute (www.tpinst.org) and **BCSI Building Component Safety Information** available from the Structural Building Component Association (www.sbcacomponents.com)

ENGINEERING BY TRENCO A MiTek Affiliate
818 Soundside Road
Edenton, NC 27932

Job	Truss	Truss Type	Qty	Ply	JSJ, Maplewood Prime B
4699682	V01	Valley	1	1	Job Reference (optional) I70935395

Builders FirstSource (Sumter, SC), Sumter, SC - 29153,

Run: 8.63 S Sep 26 2024 Print: 8.630 S Sep 26 2024 MiTek Industries, Inc. Wed Jan 22 10:14:28 Page: 1
ID:9V??y3pPQBcJjgHZpYrH6ezmvKI-RfC?PsB70Hq3NSgPqnL8w3uITXbGKWrCDoi7J4zJC?f

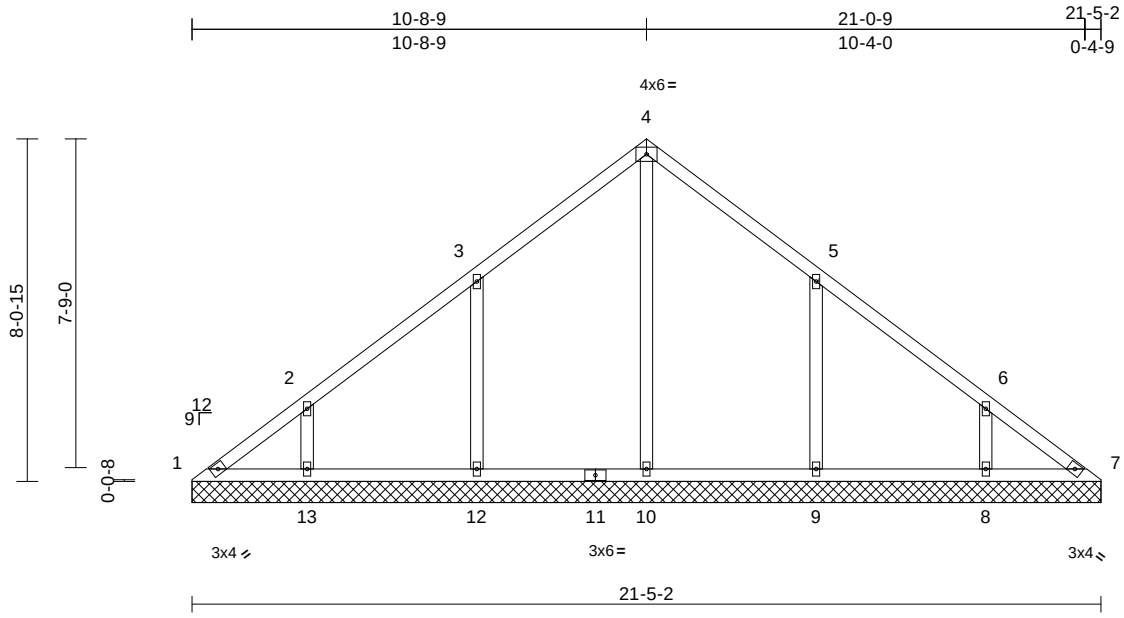

Scale = 1:54.3

Loading	(psf)	Spacing	2-0-0	CSI		DEFL	in	(loc)	l/defl	L/d	PLATES	GRIP
TCLL (roof)	20.0	Plate Grip DOL	1.15	TC	0.20	Vert(LL)	n/a	-	n/a	999	MT20	244/190
TCDL	10.0	Lumber DOL	1.15	BC	0.19	Vert(TL)	n/a	-	n/a	999		
BCLL	0.0*	Rep Stress Incr	YES	WB	0.25	Horiz(TL)	0.01	7	n/a	n/a		
BCDL	10.0	Code	IRC2015/TPI2014	Matrix-MS							Weight: 99 lb	FT = 20%

LUMBER

TOP CHORD 2x4 SP No.2
BOT CHORD 2x4 SP No.2
OTHERS 2x4 SP No.3

BRACING

TOP CHORD Structural wood sheathing directly applied or 6-0-0 oc purlins.
BOT CHORD Rigid ceiling directly applied or 10-0-0 oc bracing.

REACTIONS (size) 1=21-5-2, 7=21-5-2, 8=21-5-2, 9=21-5-2, 10=21-5-2, 12=21-5-2, 13=21-5-2
Max Horiz 1=-263 (LC 8)
Max Uplift 1=-67 (LC 8), 7=-5 (LC 9), 8=-181 (LC 13), 9=-259 (LC 13), 12=-258 (LC 12), 13=-186 (LC 12)
Max Grav 1=151 (LC 20), 7=106 (LC 22), 8=319 (LC 20), 9=457 (LC 20), 10=432 (LC 22), 12=457 (LC 19), 13=325 (LC 19)

FORCES (lb) - Maximum Compression/Maximum Tension
TOP CHORD 1-2=-248/214, 2-3=-183/161, 3-4=-214/237, 4-5=-214/227, 5-6=-115/82, 6-7=-187/128
BOT CHORD 1-13=-118/190, 12-13=-118/190, 10-12=-118/190, 9-10=-118/190, 8-9=-118/190, 7-8=-118/190
WEBS 4-10=-216/7, 3-12=-364/307, 2-13=-286/228, 5-9=-364/307, 6-8=-286/226

NOTES

1) Unbalanced roof live loads have been considered for this design.
2) Wind: ASCE 7-10; Vult=130mph (3-second gust) Vasd=103mph; TCDL=6.0psf; BCDL=6.0psf; h=25ft; Cat. II; Exp C; Enclosed; MWFRS (envelope) exterior zone and C-C Exterior (2) zone; cantilever left and right exposed ; end vertical left and right exposed;C-C for members and forces & MWFRS for reactions shown; Lumber DOL=1.60 plate grip DOL=1.60
3) Truss designed for wind loads in the plane of the truss only. For studs exposed to wind (normal to the face), see Standard Industry Gable End Details as applicable, or consult qualified building designer as per ANSI/TPI 1.
4) All plates are 2x4 MT20 unless otherwise indicated.
5) Gable requires continuous bottom chord bearing.
6) Gable studs spaced at 4-0-0 oc.
7) This truss has been designed for a 10.0 psf bottom chord live load nonconcurrent with any other live loads.
8) * This truss has been designed for a live load of 20.0psf on the bottom chord in all areas where a rectangle 3-06-00 tall by 2-00-00 wide will fit between the bottom chord and any other members, with BCDL = 10.0psf.
9) All bearings are assumed to be SP No.2 crushing capacity of 565 psi.
10) Provide mechanical connection (by others) of truss to bearing plate capable of withstanding 67 lb uplift at joint 1, 5 lb uplift at joint 7, 258 lb uplift at joint 12, 186 lb uplift at joint 13, 259 lb uplift at joint 9 and 181 lb uplift at joint 8.

LOAD CASE(S) Standard

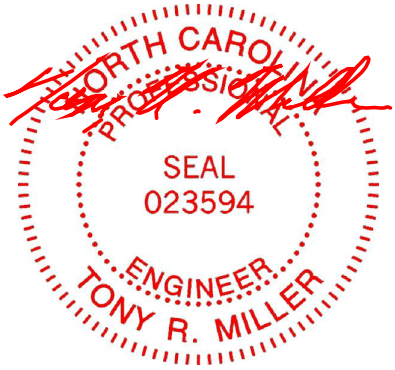

January 23,2025

WARNING - Verify design parameters and READ NOTES ON THIS AND INCLUDED MITEK REFERENCE PAGE MII-7473 rev. 1/2/2023 BEFORE USE.
Design valid for use only with MiTek® connectors. This design is based only upon parameters shown, and is for an individual building component, not a truss system. Before use, the building designer must verify the applicability of design parameters and properly incorporate this design into the overall building design. Bracing indicated is to prevent buckling of individual truss web and/or chord members only. Additional temporary and permanent bracing is always required for stability and to prevent collapse with possible personal injury and property damage. For general guidance regarding the fabrication, storage, delivery, erection and bracing of trusses and truss systems, see **ANSI/TPI1 Quality Criteria and DSB-22** available from Truss Plate Institute (www.tpinst.org) and **BCSI Building Component Safety Information** available from the Structural Building Component Association (www.sbcacomponents.com)

ENGINEERING BY TRENCO A MiTek Affiliate
818 Soundside Road
Edenton, NC 27932

Job	Truss	Truss Type	Qty	Ply	JSJ, Maplewood Prime B
4699682	V02	Valley	1	1	Job Reference (optional) I70935396

Builders FirstSource (Sumter, SC), Sumter, SC - 29153,

Run: 8.63 S Sep 26 2024 Print: 8.630 S Sep 26 2024 MiTek Industries, Inc. Wed Jan 22 10:14:28 Page: 1
ID:hay2JX0Sf5d2e8Velv71m0zmvK2-RfC?PsB70Hq3NSgPqnL8w3uITXbGKWrCDoi7J4zJC?f

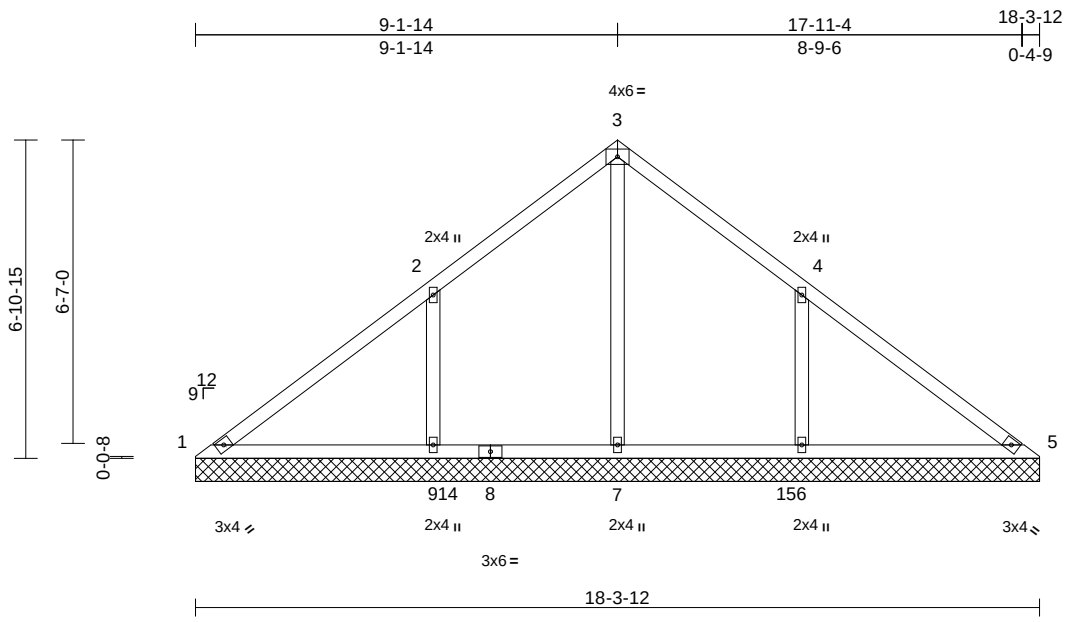

Scale = 1:50

Loading	(psf)	Spacing	2-0-0	CSI		DEFL	in	(loc)	l/defl	L/d	PLATES	GRIP
TCLL (roof)	20.0	Plate Grip DOL	1.15	TC	0.32	Vert(LL)	n/a	-	n/a	999	MT20	244/190
TCDL	10.0	Lumber DOL	1.15	BC	0.23	Vert(TL)	n/a	-	n/a	999		
BCLL	0.0*	Rep Stress Incr	YES	WB	0.31	Horiz(TL)	0.00	5	n/a	n/a		
BCDL	10.0	Code	IRC2015/TPI2014	Matrix-MS							Weight: 79 lb	FT = 20%

LUMBER
TOP CHORD 2x4 SP No.2
BOT CHORD 2x4 SP No.2
OTHERS 2x4 SP No.3

BRACING
TOP CHORD Structural wood sheathing directly applied or 10-0-0 oc purlins.
BOT CHORD Rigid ceiling directly applied or 6-0-0 oc bracing.

REACTIONS (size) 1=18-3-12, 5=18-3-12, 6=18-3-12, 7=18-3-12, 9=18-3-12
Max Horiz 1=-225 (LC 8)
Max Uplift 1=-30 (LC 8), 6=-309 (LC 13), 9=-313 (LC 12)
Max Grav 1=116 (LC 20), 5=103 (LC 24), 6=550 (LC 20), 7=532 (LC 19), 9=554 (LC 19)

FORCES (lb) - Maximum Compression/Maximum Tension
TOP CHORD 1-2=-215/318, 2-3=-25/218, 3-4=0/205, 4-5=-157/270
BOT CHORD 1-9=-264/214, 7-9=-264/214, 6-7=-264/214, 5-6=-264/214
WEBS 3-7=-368/39, 2-9=-417/334, 4-6=-417/333

NOTES
1) Unbalanced roof live loads have been considered for this design.
2) Wind: ASCE 7-10; Vult=130mph (3-second gust) Vasd=103mph; TCDL=6.0psf; BCDL=6.0psf; h=25ft; Cat. II; Exp C; Enclosed; MWFRS (envelope) exterior zone and C-C Exterior (2) zone; cantilever left and right exposed ; end vertical left and right exposed;C-C for members and forces & MWFRS for reactions shown; Lumber DOL=1.60 plate grip DOL=1.60
3) Truss designed for wind loads in the plane of the truss only. For studs exposed to wind (normal to the face), see Standard Industry Gable End Details as applicable, or consult qualified building designer as per ANSI/TPI 1.
4) Gable requires continuous bottom chord bearing.
5) Gable studs spaced at 4-0-0 oc.
6) This truss has been designed for a 10.0 psf bottom chord live load nonconcurrent with any other live loads.
7) * This truss has been designed for a live load of 20.0psf on the bottom chord in all areas where a rectangle 3-06-00 tall by 2-00-00 wide will fit between the bottom chord and any other members, with BCDL = 10.0psf.
8) All bearings are assumed to be SP No.2 crushing capacity of 565 psi.
9) Provide mechanical connection (by others) of truss to bearing plate capable of withstanding 30 lb uplift at joint 1, 313 lb uplift at joint 9 and 309 lb uplift at joint 6.

LOAD CASE(S) Standard

January 23,2025

WARNING - Verify design parameters and READ NOTES ON THIS AND INCLUDED MITEK REFERENCE PAGE MII-7473 rev. 1/2/2023 BEFORE USE.
Design valid for use only with MiTek® connectors. This design is based only upon parameters shown, and is for an individual building component, not a truss system. Before use, the building designer must verify the applicability of design parameters and properly incorporate this design into the overall building design. Bracing indicated is to prevent buckling of individual truss web and/or chord members only. Additional temporary and permanent bracing is always required for stability and to prevent collapse with possible personal injury and property damage. For general guidance regarding the fabrication, storage, delivery, erection and bracing of trusses and truss systems, see **ANSI/TPI1 Quality Criteria and DSB-22** available from Truss Plate Institute (www.tpinst.org) and **BCSI Building Component Safety Information** available from the Structural Building Component Association (www.sbcacomponents.com)

ENGINEERING BY TRENCO A MiTek Affiliate
818 Soundside Road
Edenton, NC 27932

Job	Truss	Truss Type	Qty	Ply	JSJ, Maplewood Prime B
4699682	V03	Valley	1	1	I70935397 Job Reference (optional)

Builders FirstSource (Sumter, SC), Sumter, SC - 29153,

Run: 8.63 S Sep 26 2024 Print: 8.630 S Sep 26 2024 MiTek Industries, Inc. Wed Jan 22 10:14:28 Page: 1
ID:P2dhYaY2IdAowus5K8wLYIzmvJM-RfC?PsB70Hq3NSgPqnL8w3uITXbGKWrCDoi7J4zJC?f

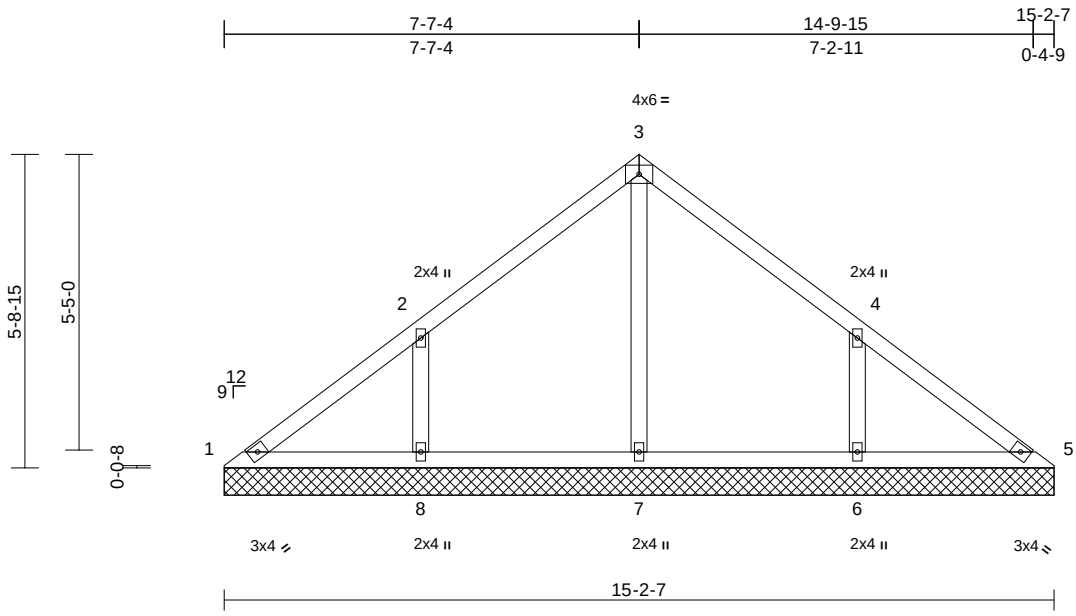

Scale = 1:42.2

Loading	(psf)	Spacing	2-0-0	CSI		DEFL	in	(loc)	l/defl	L/d	PLATES	GRIP
TCLL (roof)	20.0	Plate Grip DOL	1.15	TC	0.21	Vert(LL)	n/a	-	n/a	999	MT20	244/190
TCDL	10.0	Lumber DOL	1.15	BC	0.11	Vert(TL)	n/a	-	n/a	999		
BCLL	0.0*	Rep Stress Incr	YES	WB	0.14	Horiz(TL)	0.00	5	n/a	n/a		
BCDL	10.0	Code	IRC2015/TPI2014	Matrix-MS							Weight: 64 lb	FT = 20%

LUMBER
TOP CHORD 2x4 SP No.2
BOT CHORD 2x4 SP No.2
OTHERS 2x4 SP No.3

BRACING
TOP CHORD Structural wood sheathing directly applied or 10-0-0 oc purlins.
BOT CHORD Rigid ceiling directly applied or 6-0-0 oc bracing.

REACTIONS (size) 1=15-2-7, 5=15-2-7, 6=15-2-7, 7=15-2-7, 8=15-2-7
Max Horiz 1=-186 (LC 8)
Max Uplift 1=-33 (LC 8), 6=-249 (LC 13), 8=-252 (LC 12)
Max Grav 1=125 (LC 20), 5=96 (LC 24), 6=406 (LC 20), 7=317 (LC 1), 8=410 (LC 19)

FORCES (lb) - Maximum Compression/Maximum Tension
TOP CHORD 1-2=-160/183, 2-3=-93/149, 3-4=-93/128, 4-5=-115/131
BOT CHORD 1-8=-119/149, 7-8=-119/138, 6-7=-119/138, 5-6=-119/138
WEBS 3-7=-245/20, 2-8=-349/282, 4-6=-349/281

NOTES
1) Unbalanced roof live loads have been considered for this design.
2) Wind: ASCE 7-10; Vult=130mph (3-second gust) Vasd=103mph; TCDL=6.0psf; BCDL=6.0psf; h=25ft; Cat. II; Exp C; Enclosed; MWFRS (envelope) exterior zone and C-C Exterior (2) zone; cantilever left and right exposed ; end vertical left and right exposed;C-C for members and forces & MWFRS for reactions shown; Lumber DOL=1.60 plate grip DOL=1.60
3) Truss designed for wind loads in the plane of the truss only. For studs exposed to wind (normal to the face), see Standard Industry Gable End Details as applicable, or consult qualified building designer as per ANSI/TPI 1.
4) Gable requires continuous bottom chord bearing.
5) Gable studs spaced at 4-0-0 oc.
6) This truss has been designed for a 10.0 psf bottom chord live load nonconcurrent with any other live loads.
7) * This truss has been designed for a live load of 20.0psf on the bottom chord in all areas where a rectangle 3-06-00 tall by 2-00-00 wide will fit between the bottom chord and any other members.
8) All bearings are assumed to be SP No.2 crushing capacity of 565 psi.
9) Provide mechanical connection (by others) of truss to bearing plate capable of withstanding 33 lb uplift at joint 1, 252 lb uplift at joint 8 and 249 lb uplift at joint 6.

LOAD CASE(S) Standard

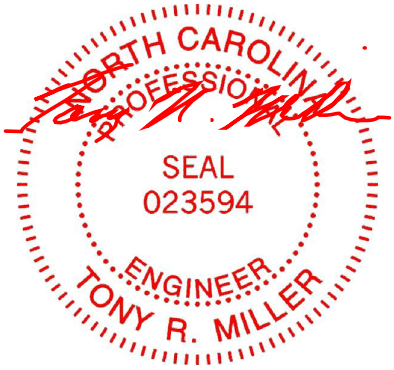

January 23,2025

WARNING - Verify design parameters and READ NOTES ON THIS AND INCLUDED MITEK REFERENCE PAGE MII-7473 rev. 1/2/2023 BEFORE USE.
Design valid for use only with MiTek® connectors. This design is based only upon parameters shown, and is for an individual building component, not a truss system. Before use, the building designer must verify the applicability of design parameters and properly incorporate this design into the overall building design. Bracing indicated is to prevent buckling of individual truss web and/or chord members only. Additional temporary and permanent bracing is always required for stability and to prevent collapse with possible personal injury and property damage. For general guidance regarding the fabrication, storage, delivery, erection and bracing of trusses and truss systems, see **ANSI/TPI1 Quality Criteria and DSB-22** available from Truss Plate Institute (www.tpinst.org) and **BCSI Building Component Safety Information** available from the Structural Building Component Association (www.sbcacomponents.com)

ENGINEERING BY TRENCO A MiTek Affiliate
818 Soundside Road
Edenton, NC 27932

Job	Truss	Truss Type	Qty	Ply	JSJ, Maplewood Prime B
4699682	V04	Valley	1	1	Job Reference (optional) I70935398

Builders FirstSource (Sumter, SC), Sumter, SC - 29153,

Run: 8.63 S Sep 26 2024 Print: 8.630 S Sep 26 2024 MiTek Industries, Inc. Wed Jan 22 10:14:28 Page: 1
ID:LiGsX4nzpSZ6ipplxemopIzmvJ3-RfC?PsB70Hq3NSgPqnL8w3uITXbGKWrCDoi7J4zJC?f

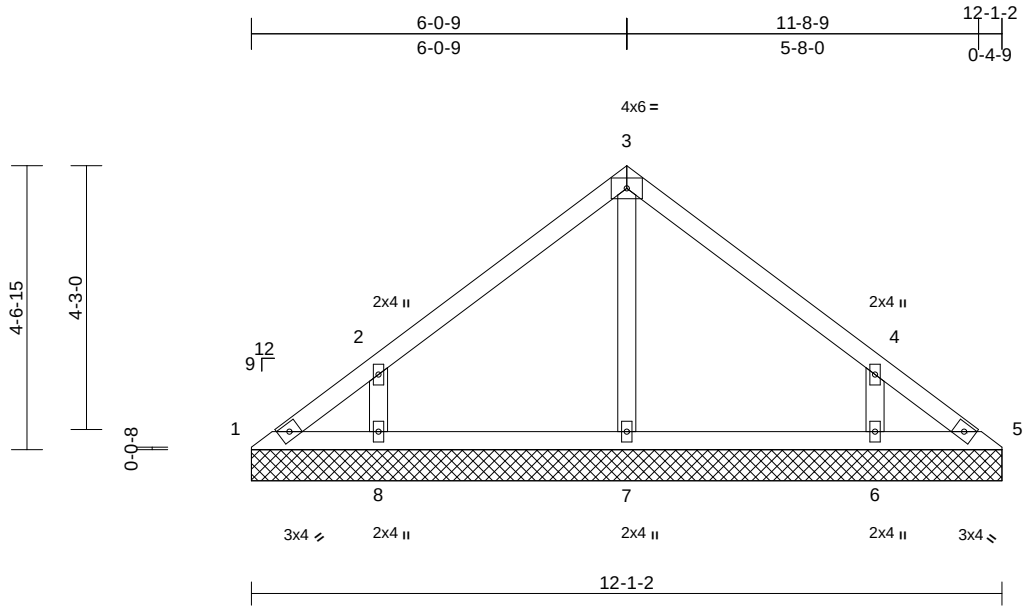

Scale = 1:37.1

Loading	(psf)	Spacing	2-0-0	CSI		DEFL	in	(loc)	l/defl	L/d	PLATES	GRIP
TCLL (roof)	20.0	Plate Grip DOL	1.15	TC	0.18	Vert(LL)	n/a	-	n/a	999	MT20	244/190
TCDL	10.0	Lumber DOL	1.15	BC	0.12	Vert(TL)	n/a	-	n/a	999		
BCLL	0.0*	Rep Stress Incr	YES	WB	0.08	Horiz(TL)	0.00	5	n/a	n/a		
BCDL	10.0	Code	IRC2015/TPI2014	Matrix-MS							Weight: 48 lb	FT = 20%

LUMBER
TOP CHORD 2x4 SP No.2
BOT CHORD 2x4 SP No.2
OTHERS 2x4 SP No.3

BRACING
TOP CHORD Structural wood sheathing directly applied or 6-0-0 oc purlins.
BOT CHORD Rigid ceiling directly applied or 10-0-0 oc bracing.

REACTIONS (size) 1=12-1-2, 5=12-1-2, 6=12-1-2, 7=12-1-2, 8=12-1-2
Max Horiz 1=-147 (LC 8)
Max Uplift 1=-45 (LC 8), 5=-9 (LC 9), 6=-209 (LC 13), 8=-213 (LC 12)
Max Grav 1=97 (LC 20), 5=69 (LC 19), 6=342 (LC 20), 7=253 (LC 1), 8=347 (LC 19)

FORCES (lb) - Maximum Compression/Maximum Tension
TOP CHORD 1-2=-140/127, 2-3=-146/139, 3-4=-146/132, 4-5=-98/74
BOT CHORD 1-8=-46/85, 7-8=-42/85, 6-7=-42/85, 5-6=-42/85
WEBS 3-7=-167/20, 2-8=-332/276, 4-6=-332/274

NOTES
1) Unbalanced roof live loads have been considered for this design.
2) Wind: ASCE 7-10; Vult=130mph (3-second gust) Vasd=103mph; TCDL=6.0psf; BCDL=6.0psf; h=25ft; Cat. II; Exp C; Enclosed; MWFRS (envelope) exterior zone and C-C Exterior (2) zone; cantilever left and right exposed ; end vertical left and right exposed;C-C for members and forces & MWFRS for reactions shown; Lumber DOL=1.60 plate grip DOL=1.60
3) Truss designed for wind loads in the plane of the truss only. For studs exposed to wind (normal to the face), see Standard Industry Gable End Details as applicable, or consult qualified building designer as per ANSI/TPI 1.
4) Gable requires continuous bottom chord bearing.
5) Gable studs spaced at 4-0-0 oc.
6) This truss has been designed for a 10.0 psf bottom chord live load nonconcurrent with any other live loads.
7) * This truss has been designed for a live load of 20.0psf on the bottom chord in all areas where a rectangle 3-06-00 tall by 2-00-00 wide will fit between the bottom chord and any other members.
8) All bearings are assumed to be SP No.2 crushing capacity of 565 psi.
9) Provide mechanical connection (by others) of truss to bearing plate capable of withstanding 45 lb uplift at joint 1, 9 lb uplift at joint 5, 213 lb uplift at joint 8 and 209 lb uplift at joint 6.

LOAD CASE(S) Standard

January 23,2025

WARNING - Verify design parameters and READ NOTES ON THIS AND INCLUDED MITEK REFERENCE PAGE MII-7473 rev. 1/2/2023 BEFORE USE.
Design valid for use only with MiTek® connectors. This design is based only upon parameters shown, and is for an individual building component, not a truss system. Before use, the building designer must verify the applicability of design parameters and properly incorporate this design into the overall building design. Bracing indicated is to prevent buckling of individual truss web and/or chord members only. Additional temporary and permanent bracing is always required for stability and to prevent collapse with possible personal injury and property damage. For general guidance regarding the fabrication, storage, delivery, erection and bracing of trusses and truss systems, see **ANSI/TPI1 Quality Criteria and DSB-22** available from Truss Plate Institute (www.tpinst.org) and **BCSI Building Component Safety Information** available from the Structural Building Component Association (www.sbcacomponents.com)

ENGINEERING BY TRENCO A MiTek Affiliate
818 Soundside Road
Edenton, NC 27932

Job	Truss	Truss Type	Qty	Ply	JSJ, Maplewood Prime B
4699682	V05	Valley	1	1	I70935399 Job Reference (optional)

Builders FirstSource (Sumter, SC), Sumter, SC - 29153,

Run: 8.63 S Sep 26 2024 Print: 8.630 S Sep 26 2024 MiTek Industries, Inc. Wed Jan 22 10:14:28 Page: 1
ID:3dteeVuESXqhvMagXkx8DPzmvIv-RfC?PsB70Hq3NSgPqnL8w3uITXbGKWrCDoi7J4zJC?f

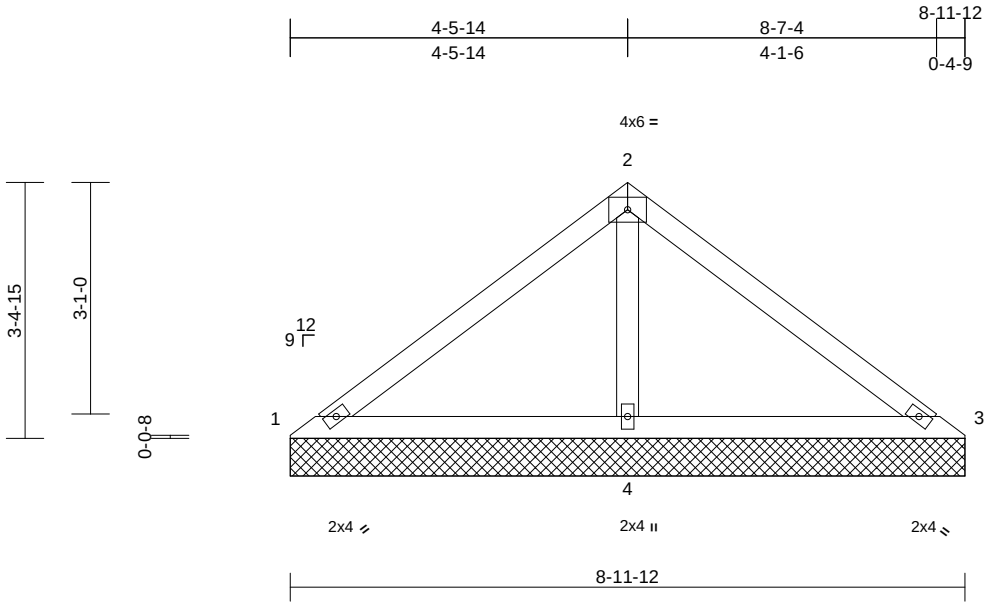

Scale = 1:30.7

Loading	(psf)	Spacing	2-0-0	CSI		DEFL	in	(loc)	l/defl	L/d	PLATES	GRIP
TCLL (roof)	20.0	Plate Grip DOL	1.15	TC	0.23	Vert(LL)	n/a	-	n/a	999	MT20	244/190
TCDL	10.0	Lumber DOL	1.15	BC	0.22	Vert(TL)	n/a	-	n/a	999		
BCLL	0.0*	Rep Stress Incr	YES	WB	0.12	Horiz(TL)	0.00	3	n/a	n/a		
BCDL	10.0	Code	IRC2015/TPI2014	Matrix-MS							Weight: 33 lb	FT = 20%

LUMBER
TOP CHORD 2x4 SP No.2
BOT CHORD 2x4 SP No.2
OTHERS 2x4 SP No.3

BRACING
TOP CHORD Structural wood sheathing directly applied or 8-11-12 oc purlins.
BOT CHORD Rigid ceiling directly applied or 6-0-0 oc bracing.

REACTIONS (size) 1=8-11-12, 3=8-11-12, 4=8-11-12
Max Horiz 1=-108 (LC 10)
Max Uplift 1=-13 (LC 24), 3=-20 (LC 8), 4=-194 (LC 12)
Max Grav 1=76 (LC 23), 3=76 (LC 24), 4=633 (LC 1)

FORCES (lb) - Maximum Compression/Maximum Tension
TOP CHORD 1-2=-112/271, 2-3=-112/264
BOT CHORD 1-4=-257/178, 3-4=-257/178
WEBS 2-4=-523/277

NOTES
1) Unbalanced roof live loads have been considered for this design.
2) Wind: ASCE 7-10; Vult=130mph (3-second gust) Vasd=103mph; TCDL=6.0psf; BCDL=6.0psf; h=25ft; Cat. II; Exp C; Enclosed; MWFRS (envelope) exterior zone and C-C Exterior (2) zone; cantilever left and right exposed ; end vertical left and right exposed;C-C for members and forces & MWFRS for reactions shown; Lumber DOL=1.60 plate grip DOL=1.60
3) Truss designed for wind loads in the plane of the truss only. For studs exposed to wind (normal to the face), see Standard Industry Gable End Details as applicable, or consult qualified building designer as per ANSI/TPI 1.
4) Gable requires continuous bottom chord bearing.
5) Gable studs spaced at 4-0-0 oc.
6) This truss has been designed for a 10.0 psf bottom chord live load nonconcurrent with any other live loads.
7) * This truss has been designed for a live load of 20.0psf on the bottom chord in all areas where a rectangle 3-06-00 tall by 2-00-00 wide will fit between the bottom chord and any other members.
8) All bearings are assumed to be SP No.2 crushing capacity of 565 psi.
9) Provide mechanical connection (by others) of truss to bearing plate capable of withstanding 13 lb uplift at joint 1, 20 lb uplift at joint 3 and 194 lb uplift at joint 4.

LOAD CASE(S) Standard

January 23,2025

WARNING - Verify design parameters and READ NOTES ON THIS AND INCLUDED MITEK REFERENCE PAGE MII-7473 rev. 1/2/2023 BEFORE USE.
Design valid for use only with MiTek® connectors. This design is based only upon parameters shown, and is for an individual building component, not a truss system. Before use, the building designer must verify the applicability of design parameters and properly incorporate this design into the overall building design. Bracing indicated is to prevent buckling of individual truss web and/or chord members only. Additional temporary and permanent bracing is always required for stability and to prevent collapse with possible personal injury and property damage. For general guidance regarding the fabrication, storage, delivery, erection and bracing of trusses and truss systems, see **ANSI/TPI1 Quality Criteria and DSB-22** available from Truss Plate Institute (www.tpinst.org) and **BCSI Building Component Safety Information** available from the Structural Building Component Association (www.sbcacomponents.com)

ENGINEERING BY TRENCO A MiTek Affiliate
818 Soundside Road
Edenton, NC 27932

Job	Truss	Truss Type	Qty	Ply	JSJ, Maplewood Prime B
4699682	V06	Valley	1	1	Job Reference (optional) I70935400

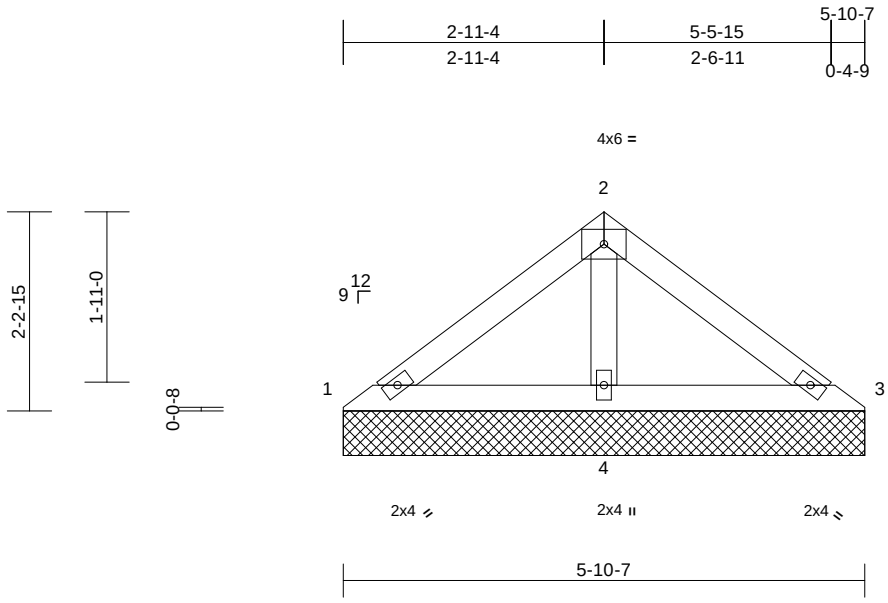

Scale = 1:25.9

Loading	(psf)	Spacing	2-0-0	CSI		DEFL	in	(loc)	l/defl	L/d	PLATES	GRIP
TCLL (roof)	20.0	Plate Grip DOL	1.15	TC	0.10	Vert(LL)	n/a	-	n/a	999	MT20	244/190
TCDL	10.0	Lumber DOL	1.15	BC	0.11	Vert(TL)	n/a	-	n/a	999		
BCLL	0.0*	Rep Stress Incr	YES	WB	0.05	Horiz(TL)	0.00	3	n/a	n/a		
BCDL	10.0	Code	IRC2015/TPI2014	Matrix-MP							Weight: 21 lb	FT = 20%

LUMBER
TOP CHORD 2x4 SP No.2
BOT CHORD 2x4 SP No.2
OTHERS 2x4 SP No.3

BRACING
TOP CHORD Structural wood sheathing directly applied or 5-10-7 oc purlins.
BOT CHORD Rigid ceiling directly applied or 6-0-0 oc bracing.

REACTIONS (size) 1=5-10-7, 3=5-10-7, 4=5-10-7
Max Horiz 1=69 (LC 9)
Max Uplift 1=-5 (LC 12), 3=-18 (LC 13), 4=-105 (LC 12)
Max Grav 1=67 (LC 23), 3=67 (LC 24), 4=367 (LC 1)

FORCES (lb) - Maximum Compression/Maximum Tension
TOP CHORD 1-2=-61/135, 2-3=-61/127
BOT CHORD 1-4=-143/109, 3-4=-143/109
WEBS 2-4=-257/135

NOTES
1) Unbalanced roof live loads have been considered for this design.
2) Wind: ASCE 7-10; Vult=130mph (3-second gust) Vasd=103mph; TCDL=6.0psf; BCDL=6.0psf; h=25ft; Cat. II; Exp C; Enclosed; MWFRS (envelope) exterior zone and C-C Exterior (2) zone; cantilever left and right exposed ; end vertical left and right exposed;C-C for members and forces & MWFRS for reactions shown; Lumber DOL=1.60 plate grip DOL=1.60
3) Truss designed for wind loads in the plane of the truss only. For studs exposed to wind (normal to the face), see Standard Industry Gable End Details as applicable, or consult qualified building designer as per ANSI/TPI 1.
4) Gable requires continuous bottom chord bearing.
5) Gable studs spaced at 3-0-0 oc.
6) This truss has been designed for a 10.0 psf bottom chord live load nonconcurrent with any other live loads.
7) * This truss has been designed for a live load of 20.0psf on the bottom chord in all areas where a rectangle 3-06-00 tall by 2-00-00 wide will fit between the bottom chord and any other members.
8) All bearings are assumed to be SP No.2 crushing capacity of 565 psi.
9) Provide mechanical connection (by others) of truss to bearing plate capable of withstanding 5 lb uplift at joint 1, 18 lb uplift at joint 3 and 105 lb uplift at joint 4.

LOAD CASE(S) Standard

January 23,2025

WARNING - Verify design parameters and READ NOTES ON THIS AND INCLUDED MITEK REFERENCE PAGE MII-7473 rev. 1/2/2023 BEFORE USE.
Design valid for use only with MiTek® connectors. This design is based only upon parameters shown, and is for an individual building component, not a truss system. Before use, the building designer must verify the applicability of design parameters and properly incorporate this design into the overall building design. Bracing indicated is to prevent buckling of individual truss web and/or chord members only. Additional temporary and permanent bracing is always required for stability and to prevent collapse with possible personal injury and property damage. For general guidance regarding the fabrication, storage, delivery, erection and bracing of trusses and truss systems, see **ANSI/TPI1 Quality Criteria and DSB-22** available from Truss Plate Institute (www.tpinst.org) and **BCSI Building Component Safety Information** available from the Structural Building Component Association (www.sbcacomponents.com)

ENGINEERING BY TRENCO A MiTek Affiliate
818 Soundside Road
Edenton, NC 27932

Job	Truss	Truss Type	Qty	Ply	JSJ, Maplewood Prime B
4699682	V07	Valley	1	1	I70935401 Job Reference (optional)

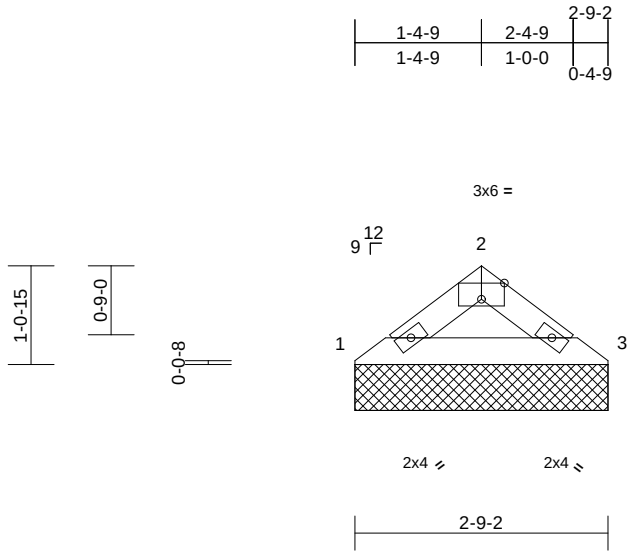

Scale = 1:25.1

Plate Offsets (X, Y): [2:0-3-0,Edge]

Loading	(psf)	Spacing	2-0-0	CSI		DEFL	in	(loc)	l/defl	L/d	PLATES	GRIP
TCLL (roof)	20.0	Plate Grip DOL	1.15	TC	0.05	Vert(LL)	n/a	-	n/a	999	MT20	244/190
TCDL	10.0	Lumber DOL	1.15	BC	0.05	Vert(TL)	n/a	-	n/a	999		
BCLL	0.0*	Rep Stress Incr	YES	WB	0.00	Horiz(TL)	0.00	3	n/a	n/a		
BCDL	10.0	Code	IRC2015/TPI2014	Matrix-MP							Weight: 8 lb	FT = 20%

LUMBER
TOP CHORD 2x4 SP No.2
BOT CHORD 2x4 SP No.2

BRACING
TOP CHORD Structural wood sheathing directly applied or 2-9-2 oc purlins.
BOT CHORD Rigid ceiling directly applied or 10-0-0 oc bracing.

REACTIONS (size) 1=2-9-2, 3=2-9-2
Max Horiz 1=-30 (LC 10)
Max Uplift 1=-28 (LC 12), 3=-28 (LC 13)
Max Grav 1=110 (LC 1), 3=110 (LC 1)

FORCES (lb) - Maximum Compression/Maximum Tension
TOP CHORD 1-2=-146/58, 2-3=-146/58
BOT CHORD 1-3=-34/118

NOTES
1) Unbalanced roof live loads have been considered for this design.
2) Wind: ASCE 7-10; Vult=130mph (3-second gust) Vasd=103mph; TCDL=6.0psf; BCDL=6.0psf; h=25ft; Cat. II; Exp C; Enclosed; MWFRS (envelope) exterior zone and C-C Exterior (2) zone; cantilever left and right exposed ; end vertical left and right exposed;C-C for members and forces & MWFRS for reactions shown; Lumber DOL=1.60 plate grip DOL=1.60
3) Truss designed for wind loads in the plane of the truss only. For studs exposed to wind (normal to the face), see Standard Industry Gable End Details as applicable, or consult qualified building designer as per ANSI/TPI 1.
4) Gable requires continuous bottom chord bearing.
5) Gable studs spaced at 2-0-0 oc.
6) This truss has been designed for a 10.0 psf bottom chord live load nonconcurrent with any other live loads.
7) * This truss has been designed for a live load of 20.0psf on the bottom chord in all areas where a rectangle 3-06-00 tall by 2-00-00 wide will fit between the bottom chord and any other members.
8) All bearings are assumed to be SP No.2 crushing capacity of 565 psi.
9) Provide mechanical connection (by others) of truss to bearing plate capable of withstanding 28 lb uplift at joint 1 and 28 lb uplift at joint 3.

LOAD CASE(S) Standard

January 23,2025

WARNING - Verify design parameters and READ NOTES ON THIS AND INCLUDED MITEK REFERENCE PAGE MII-7473 rev. 1/2/2023 BEFORE USE.
Design valid for use only with MiTek® connectors. This design is based only upon parameters shown, and is for an individual building component, not a truss system. Before use, the building designer must verify the applicability of design parameters and properly incorporate this design into the overall building design. Bracing indicated is to prevent buckling of individual truss web and/or chord members only. Additional temporary and permanent bracing is always required for stability and to prevent collapse with possible personal injury and property damage. For general guidance regarding the fabrication, storage, delivery, erection and bracing of trusses and truss systems, see **ANSI/TPI1 Quality Criteria and DSB-22** available from Truss Plate Institute (www.tpinst.org) and **BCSI Building Component Safety Information** available from the Structural Building Component Association (www.sbcacomponents.com)

ENGINEERING BY TRENCO A MiTek Affiliate
818 Soundside Road
Edenton, NC 27932

Symbols

PLATE LOCATION AND ORIENTATION

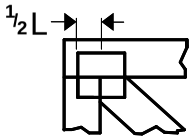

Center plate on joint unless x, y offsets are indicated. Dimensions are in ft-in-sixteenths. Apply plates to both sides of truss and fully embed teeth.

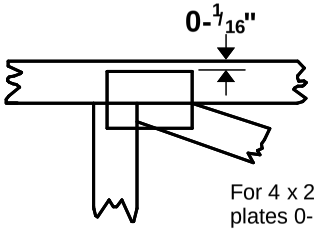

For 4 x 2 orientation, locate plates 0- 1/16" from outside edge of truss.

This symbol indicates the required direction of slots in connector plates.

* Plate location details available in MiTek software or upon request.

PLATE SIZE

4 x 4

The first dimension is the plate width measured perpendicular to slots. Second dimension is the length parallel to slots.

LATERAL BRACING LOCATION

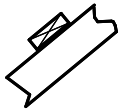

Indicated by symbol shown and/or by text in the bracing section of the output. Use T or I bracing if indicated.

BEARING

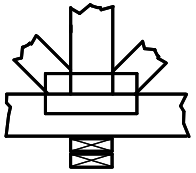

Indicates location where bearings (supports) occur. Icons vary but reaction section indicates joint number/letter where bearings occur. Min size shown is for crushing only.

Industry Standards:

ANSI/TPI1: National Design Specification for Metal Plate Connected Wood Truss Construction.
DSB-22: Design Standard for Bracing.
BCSI: Building Component Safety Information, Guide to Good Practice for Handling, Installing, Restraining & Bracing of Metal Plate Connected Wood Trusses.

Numbering System

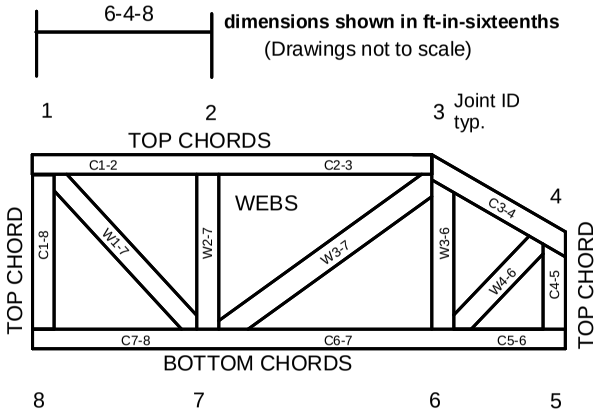

JOINTS ARE GENERALLY NUMBERED/LETTERED CLOCKWISE AROUND THE TRUSS STARTING AT THE JOINT FARTHEST TO THE LEFT.

CHORDS AND WEBS ARE IDENTIFIED BY END JOINT NUMBERS/LETTERS.

Product Code Approvals

ICC-ES Reports:

ESR-1988, ESR-2362, ESR-2685, ESR-3282
ESR-4722, ESL-1388

Design General Notes

Trusses are designed for wind loads in the plane of the truss unless otherwise shown.

Lumber design values are in accordance with ANSI/TPI 1 section 6.3 These truss designs rely on lumber values established by others.

© 2023 MiTek® All Rights Reserved

MiTek®

ENGINEERING BY TRENCO
A MiTek Affiliate

General Safety Notes

Failure to Follow Could Cause Property Damage or Personal Injury

1. Additional stability bracing for truss system, e.g. diagonal or X-bracing, is always required. See BCSI.
2. Truss bracing must be designed by an engineer. For wide truss spacing, individual lateral braces themselves may require bracing, or alternative Tor I bracing should be considered.
3. Never exceed the design loading shown and never stack materials on inadequately braced trusses.
4. Provide copies of this truss design to the building designer, erection supervisor, property owner and all other interested parties.
5. Cut members to bear tightly against each other.
6. Place plates on each face of truss at each joint and embed fully. Knots and wane at joint locations are regulated by ANSI/TPI 1.
7. Design assumes trusses will be suitably protected from the environment in accord with ANSI/TPI 1.
8. Unless otherwise noted, moisture content of lumber shall not exceed 19% at time of fabrication.
9. Unless expressly noted, this design is not applicable for use with fire retardant, preservative treated, or green lumber.
10. Camber is a non-structural consideration and is the responsibility of truss fabricator. General practice is to camber for dead load deflection.
11. Plate type, size, orientation and location dimensions indicated are minimum plating requirements.
12. Lumber used shall be of the species and size, and in all respects, equal to or better than that specified.
13. Top chords must be sheathed or purlins provided at spacing indicated on design.
14. Bottom chords require lateral bracing at 10 ft. spacing, or less, if no ceiling is installed, unless otherwise noted.
15. Connections not shown are the responsibility of others.
16. Do not cut or alter truss member or plate without prior approval of an engineer.
17. Install and load vertically unless indicated otherwise.
18. Use of green or treated lumber may pose unacceptable environmental, health or performance risks. Consult with project engineer before use.
19. Review all portions of this design (front, back, words and pictures) before use. Reviewing pictures alone is not sufficient.
20. Design assumes manufacture in accordance with ANSI/TPI 1 Quality Criteria.
21. The design does not take into account any dynamic or other loads other than those expressly stated.