MALBEC-RALE

RALEIGH - LOT 00.0024 THE FARM AT NEILL' S CREEK

(MODEL# 1930)

ELEVATION 1 - GR

256 Peach Grove Way

INDEX

DRB HOMES

AREA CALCULATIONS

ELEVATION 1	HEATED	COVERED / UNHEATED	UNCOVERED
FIRST FLOOR	885 SF		
GARAGE		448 SF	
FRONT PORCH – ELEVATION 1		57 SF	
SECOND FLOOR	1100 SF		
OPTIONS			
SCREEN PORCH		127 SF	
TOTAL	1985 SF	632 SF	

LOT SPECIFIC

1	LOT 00.0024	THE FARM AT NEILL' S CREEK
		MALBEC REV. RALE 1 ELEVATION 1
2	ADDRESS	256 PEACH GROVE WAY LILLINGTON, NC 27546

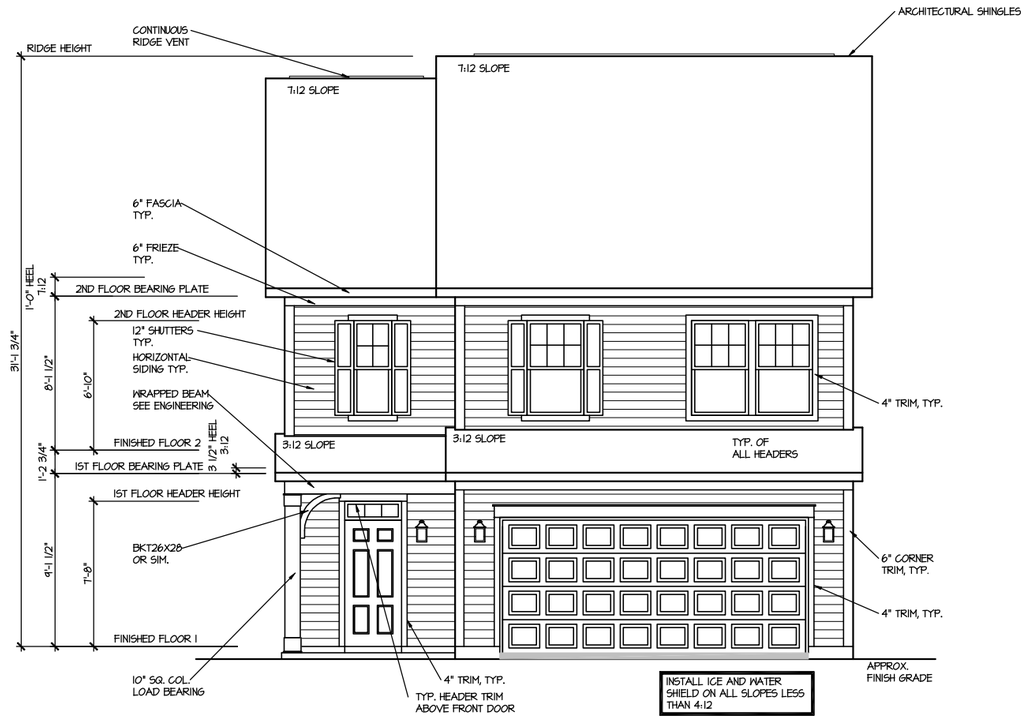

FRONT ELEVATION 1

SCALE: 1/8" = 1'-0"

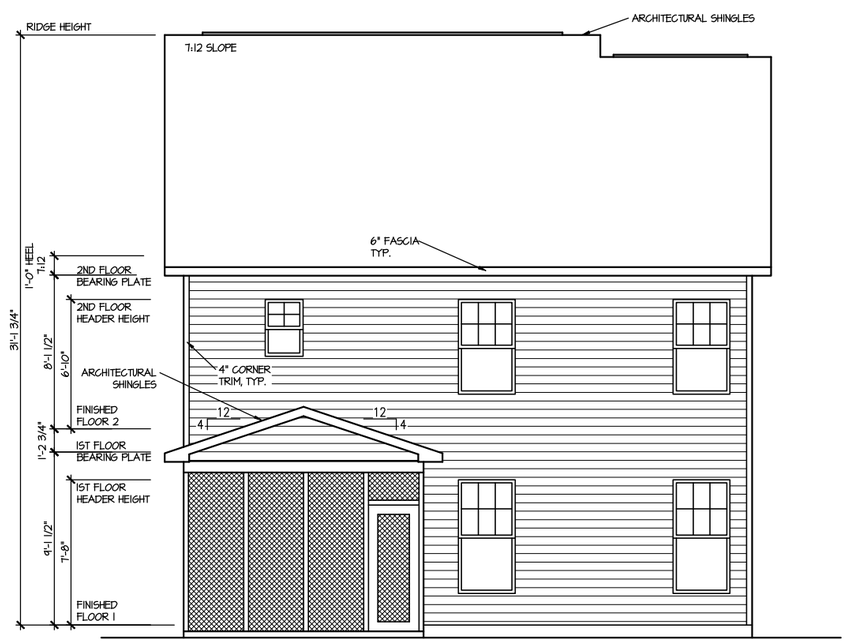

REAR ELEVATION 1

SCALE: 1/8" = 1'-0"

FILE: Lot 00.0024.dwg DATE: 7/9/2025 1:23 PM

MASTER PLAN INFORMATION		
REVISION	DATE	UPDATED DATE
1-RALE	07-06-2018	05-19-2025

DRAWN BY: ITS

DATE: 07/09/2025

PLAN NO. 1930

DRB HOMES

HOUSE NAME: MALBEC

DRAWING TITLE: FRONT & REAR ELEVATIONS

SHEET No. A1.1

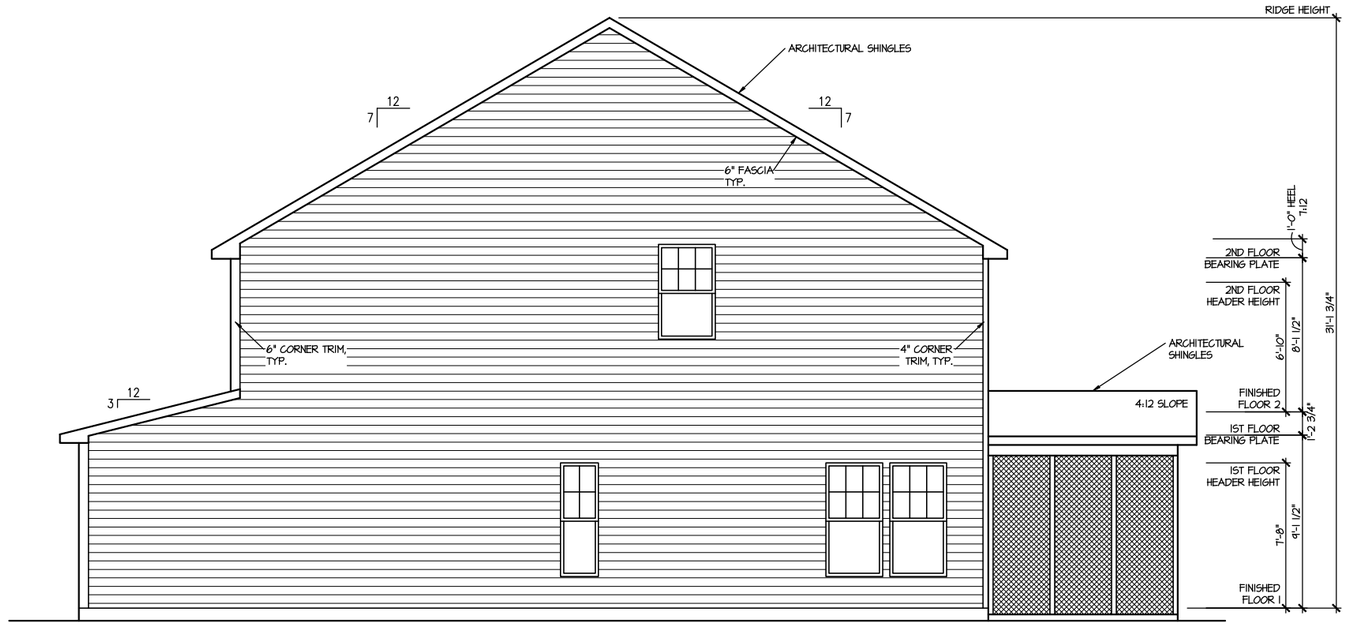

RIGHT ELEVATION 1

SCALE: 1/8" = 1'-0"

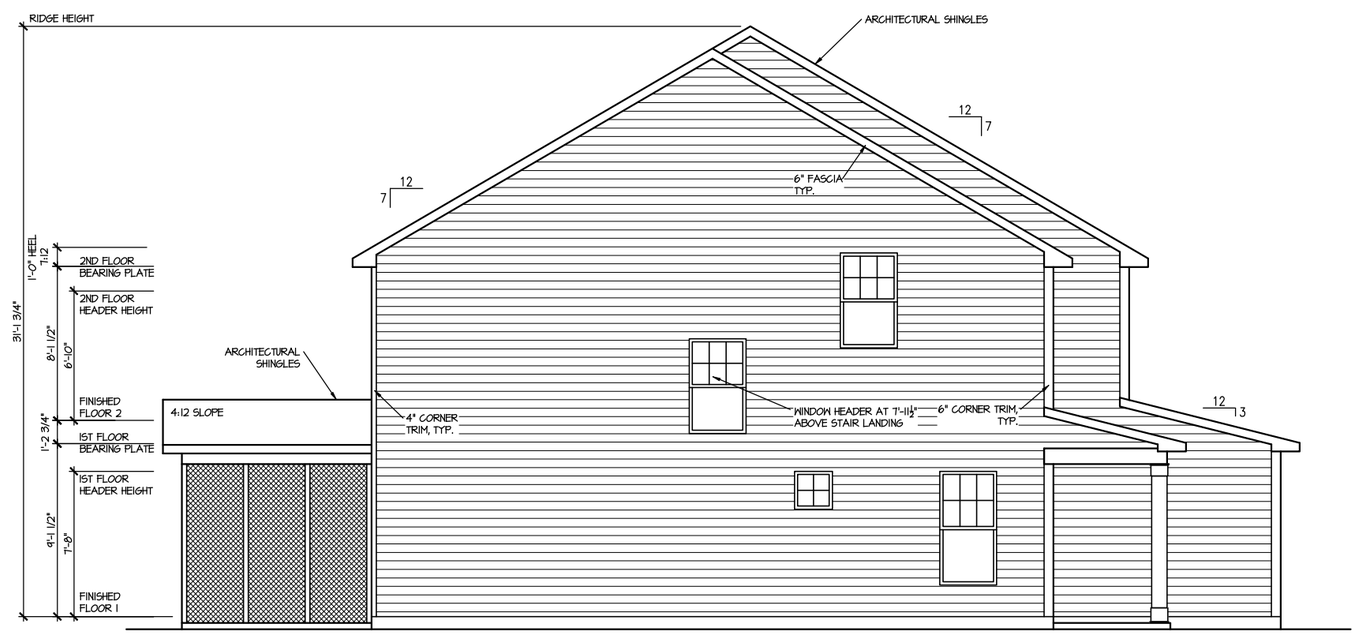

LEFT ELEVATION 1

SCALE: 1/8" = 1'-0"

MASTER PLAN INFORMATION	
REVISION	DATE
1-RALE	07-06-2018
UPDATED DATE	
05-19-2025	

DRAWN BY: ITS

DATE: 07/09/2025

PLAN NO. 1930

DRB HOMES

HOUSE NAME: MALBEC

DRAWING TITLE: RIGHT & LEFT ELEVATIONS

SHEET No. A1.2

FILE: Lot 00.0024.dwg DATE: 7/9/2025 1:23 PM

UPPER ROOF VENTILATION CALCULATIONS:

ROOF AREA = 1244 SQ. FT.
OVERALL REQUIRED VENTILATION.
1 TO 150 = 8.24 SQ. FT.
1 TO 300 = 4.15 SQ. FT.
50-80% IN TOP THIRD = 2.08 - 3.32 SQ. FT. (1 TO 300)

NET FREE AREA OF VENTED SOFFIT = 5.7 SQ. IN / LINEAR FT.
NET FREE AREA OF RIDGE VENT = 18 SQ. IN/ LINEAR FT.

LOWER VENTING: (BOTTOM 2/3 RD.)
65 LINEAR FEET OF SOFFIT X 5.7 SQ. IN. = 2.57 SQ. FT.
UPPER VENTING: (TOP 1/3 RD)
26 LINEAR FEET OF RIDGE X 18 SQ. IN = 3.25 SQ. FT.
3.25 SQ. FT. BETWEEN 50% - 80%
(1 TO 300 ALLOWED)
TOTAL ROOF VENTILATION: 5.82 SQ. FT. > 4.15 SQ. FT. (REQ'D)

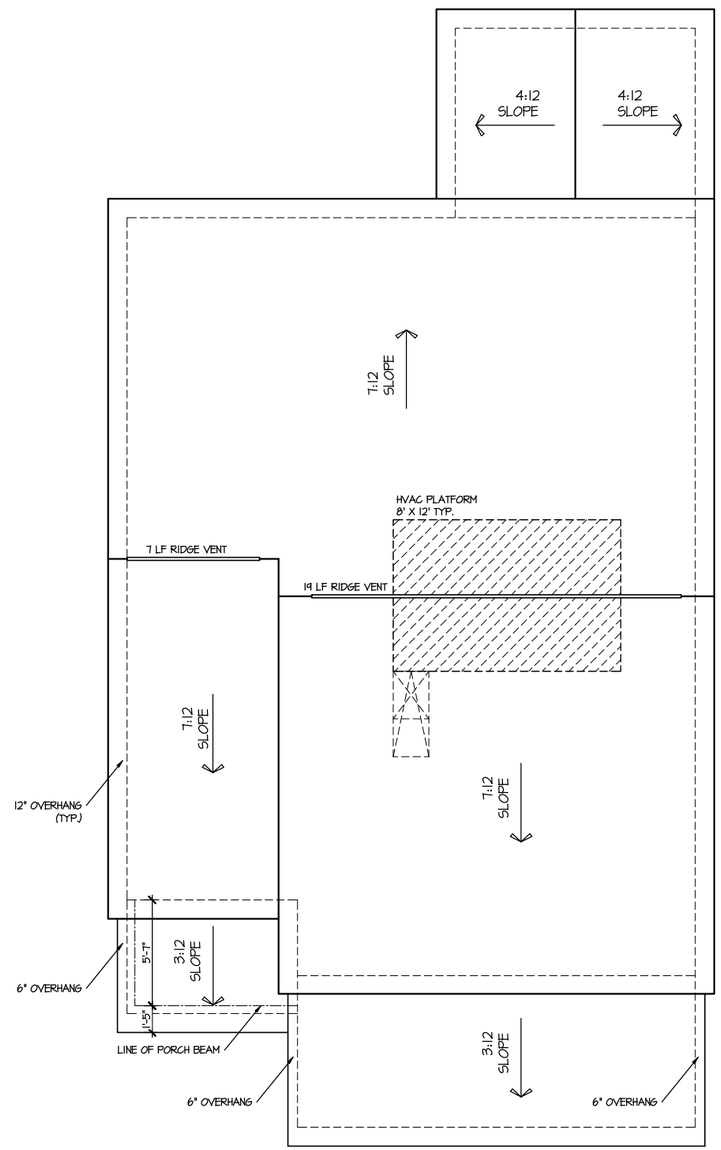

ROOF PLAN ELEV. 1

SCALE: 1/8" = 1'-0"

FILE: Lot 00.0024.dwg DATE: 7/9/2025 1:23 PM

MASTER PLAN INFORMATION

REVISION	DATE	UPDATED DATE
1-RALE	07-06-2018	05-19-2025

DRAWN BY: ITS

DATE: 07/09/2025

PLAN NO. 1930

DRB HOMES

HOUSE NAME: MALBEC

DRAWING TITLE: ROOF PLAN

SHEET No. A1.3

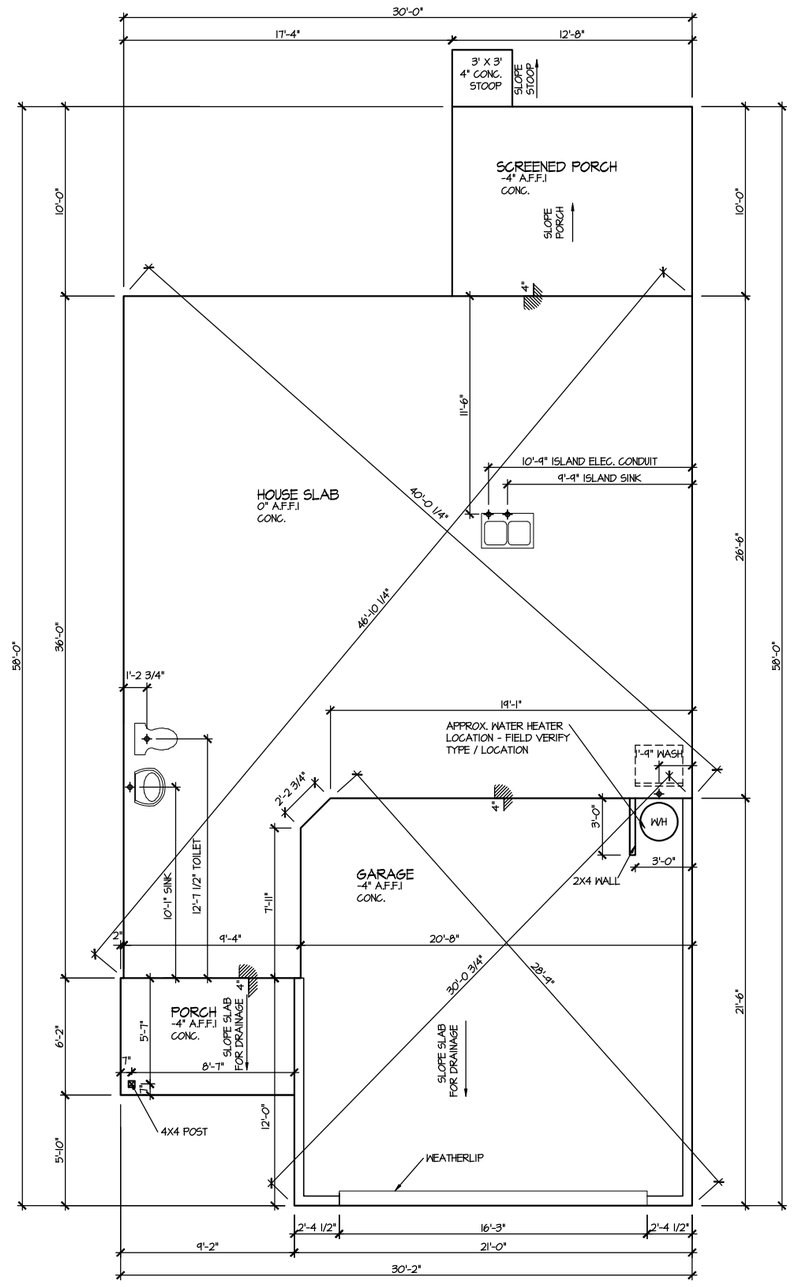

ELEVATION 1
SLAB PLAN

SCALE: 1/8" = 1'-0"

FILE: Lot 00.0024.dwg DATE: 7/9/2025 1:23 PM

MASTER PLAN INFORMATION		
REVISION	DATE	UPDATED DATE
1-RALE	07-06-2018	05-19-2025

DRAWN BY: ITS

DATE: 07/09/2025

PLAN NO. 1930

DRB HOMES

HOUSE NAME: MALBEC

DRAWING TITLE: SLAB PLAN

SHEET No. A2.1

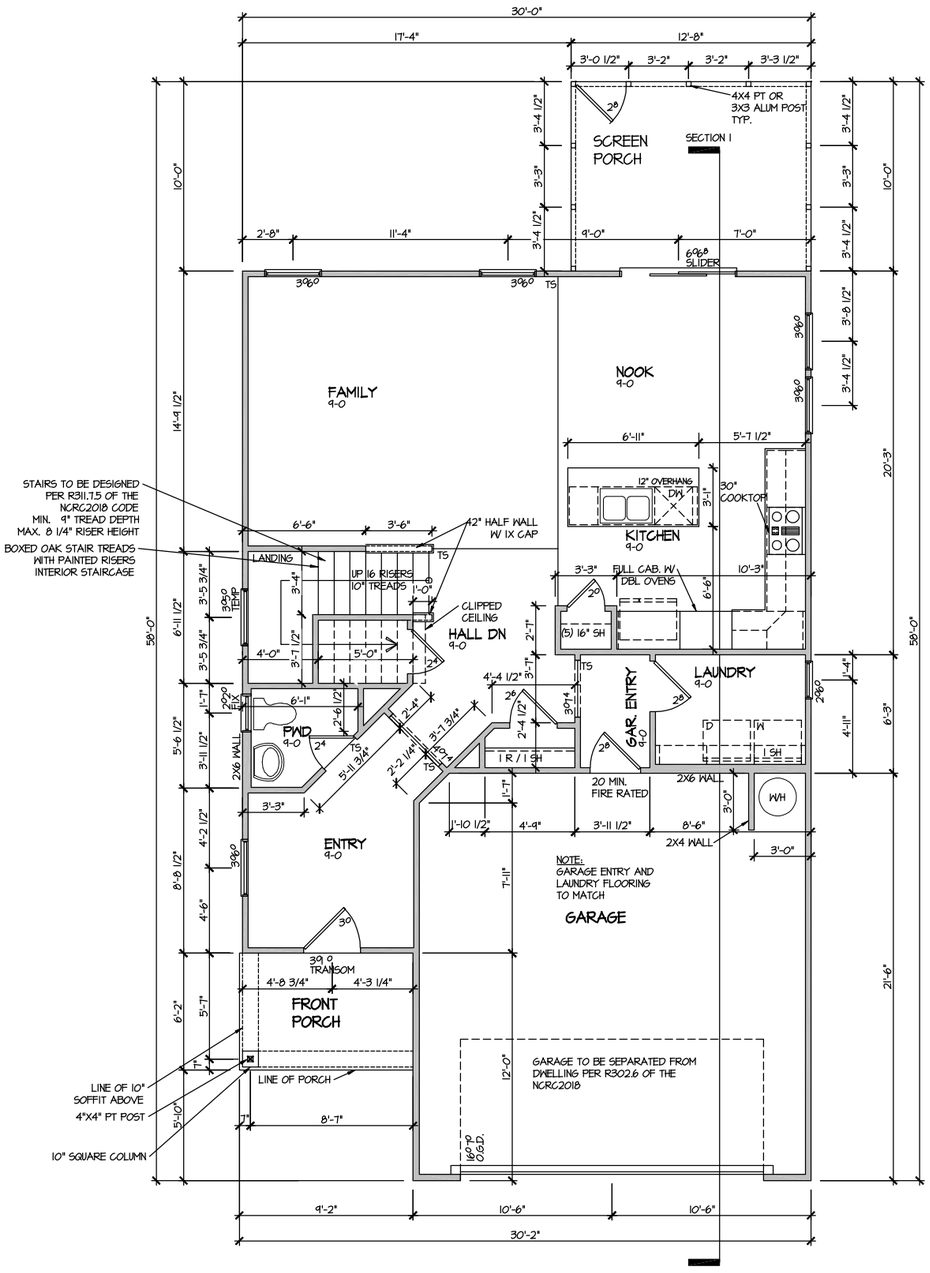

ELEVATION 1
FIRST FLOOR PLAN

SCALE: 1/8" = 1'-0"

MASTER PLAN INFORMATION	
REVISION	DATE
1-RALE	07-06-2018
UPDATED DATE	
05-19-2025	

DRAWN BY: ITS

DATE: 07/09/2025

PLAN NO. 1930

DRB HOMES

HOUSE NAME: MALBEC

DRAWING TITLE: FIRST FLOOR PLAN

SHEET No. A3.1

FILE: Lot 00.0024.dwg DATE: 7/9/2025 1:23 PM

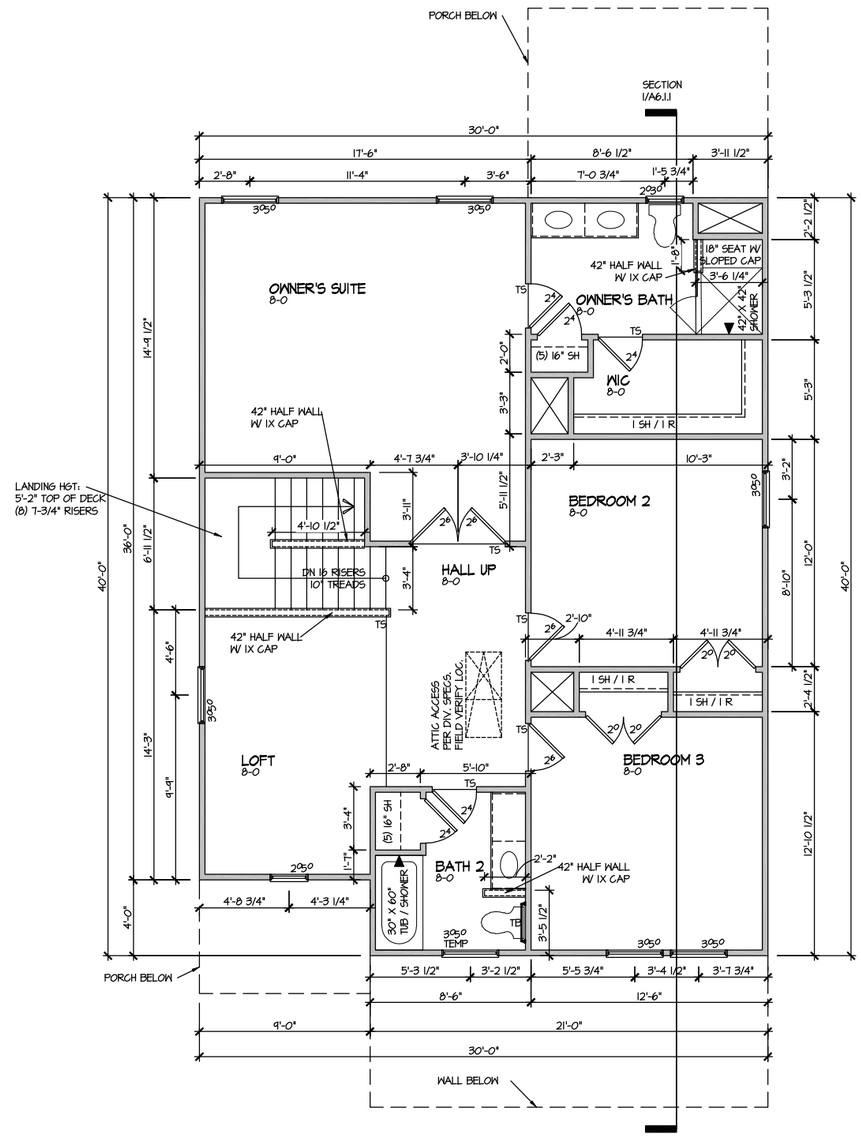

ELEVATION 1
SECOND FLOOR PLAN

SCALE: 1/8" = 1'-0"

FILE: Lot 00.0024.dwg DATE: 7/9/2025 1:23 PM

MASTER PLAN INFORMATION	
REVISION	DATE
1-RALE	07-06-2018
UPDATED DATE	
05-19-2025	

DRAWN BY: ITS

DATE: 07/09/2025

PLAN NO. 1930

DRB HOMES

HOUSE NAME: MALBEC

DRAWING TITLE: SECOND FLOOR PLAN

SHEET No. A3.2

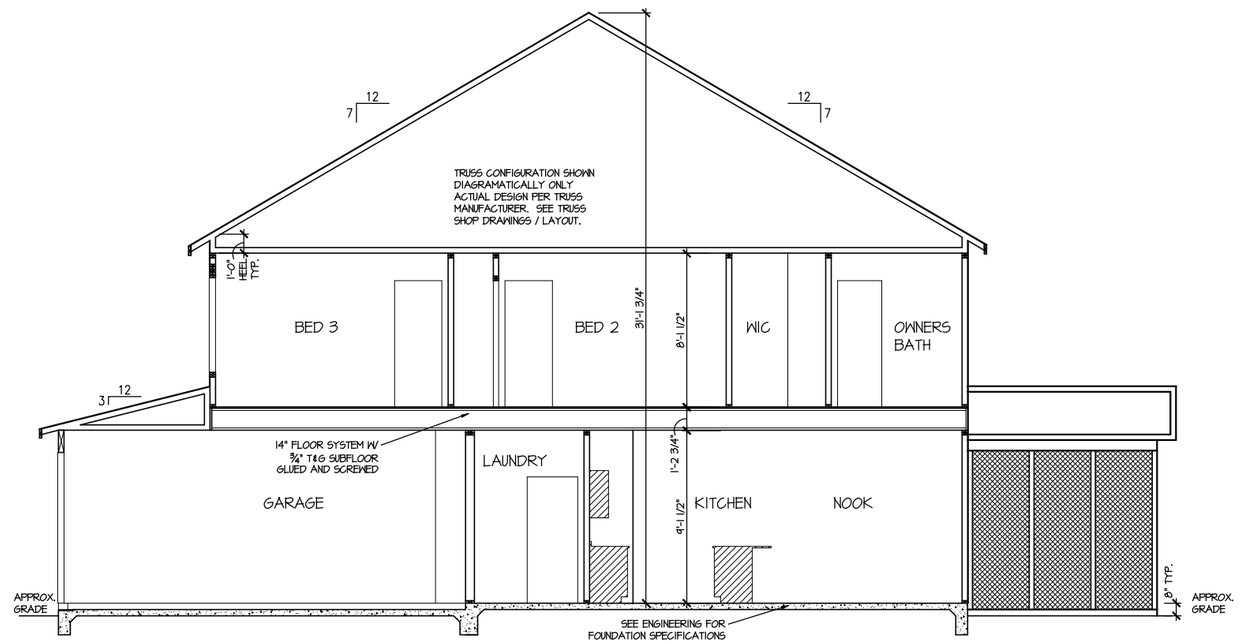

SECTION 1

SCALE: 1/8" = 1'-0"

MASTER PLAN INFORMATION		
REVISION	DATE	UPDATED DATE
1-RALE	07-06-2018	05-19-2025

DRAWN BY: ITS

DATE: 07/09/2025

PLAN NO. 1930

DRB HOMES

HOUSE NAME: MALBEC

DRAWING TITLE: BUILDING SECTION

SHEET No. A4.1

FILE: Lot 00.0024.dwg DATE: 7/9/2025 1:23 PM

ELECTRICAL LEGEND

$	SINGLE POLE SWITCH
$3	THREE WAY SWITCH
$4	FOUR WAY SWITCH
	DUPLEX AFCI RECEPTACLE
	DUPLEX AFCI RECEPTACLE - BOTTOM HALF SWITCHED
	DUPLEX AFCI RECEPTACLE - FLOOR MOUNTED
220V	RECEPTACLE - 220V
GFI	DUPLEX AFCI RECEPTACLE - GFI
WP/GFI	DUPLEX AFCI RECEPTACLE - WATERPROOF GFI
SD	SMOKE DETECTOR - WIRED IN SERIES
	EXHAUST FAN MOTOR
CO	CO DETECTOR
	DOOR CHIME
H	LIGHT FIXTURE - WALL MOUNTED
	LIGHT FIXTURE - CEILING MOUNTED
LED	LIGHT FIXTURE - LED SURFACE MOUNTED
P	PULLCHAIN LAMPHOLDER
K	KEYLESS LAMPHOLDER

NOTE: ALL ELECTRICAL WORK SHALL CONFORM TO THE REQUIREMENTS OF THE ADOPTED VERSION OF THE NATIONAL ELECTRICAL CODE, THE LOCAL POWER COMPANY AND TO ALL APPLICABLE LOCAL REGULATIONS.

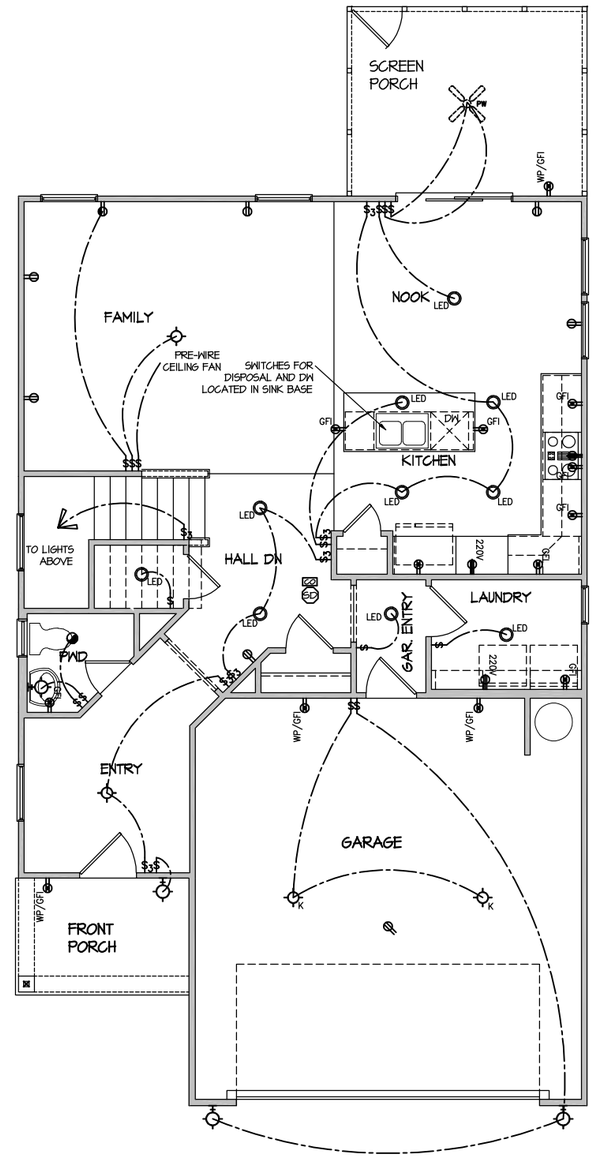

ELECTRICAL PLAN
FIRST FLOOR - ELEV. 1

SCALE: 1/8" = 1'-0"

FILE: Lot 00.0024.dwg DATE: 7/9/2025 1:23 PM

MASTER PLAN INFORMATION	
REVISION	DATE
1-RALE	07-06-2018
UPDATED DATE	
05-19-2025	

DRAWN BY: ITS

DATE: 07/09/2025

PLAN NO. 1930

DRB HOMES

HOUSE NAME: MALBEC

DRAWING TITLE: FIRST FLOOR ELECTRICAL

SHEET No. E1.1

ELECTRICAL LEGEND

- SINGLE POLE SWITCH
- THREE WAY SWITCH
- FOUR WAY SWITCH
- DUPLEX AFCI RECEPTACLE
- DUPLEX AFCI RECEPTACLE - BOTTOM HALF SWITCHED
- DUPLEX AFCI RECEPTACLE - FLOOR MOUNTED
- 220V RECEPTACLE - 220V
- GFI DUPLEX AFCI RECEPTACLE - GFI
- WP/GFI DUPLEX AFCI RECEPTACLE - WATERPROOF GFI
- SD SMOKE DETECTOR - WIRED IN SERIES
- EXHAUST FAN MOTOR
- CO DETECTOR
- DOOR CHIME
- LIGHT FIXTURE - WALL MOUNTED
- LIGHT FIXTURE - CEILING MOUNTED
- LED LIGHT FIXTURE - LED SURFACE MOUNTED
- P PULLCHAIN LAMPHOLDER
- K KEYLESS LAMPHOLDER

NOTE: ALL ELECTRICAL WORK SHALL CONFORM TO THE REQUIREMENTS OF THE ADOPTED VERSION OF THE NATIONAL ELECTRICAL CODE, THE LOCAL POWER COMPANY AND TO ALL APPLICABLE LOCAL REGULATIONS.

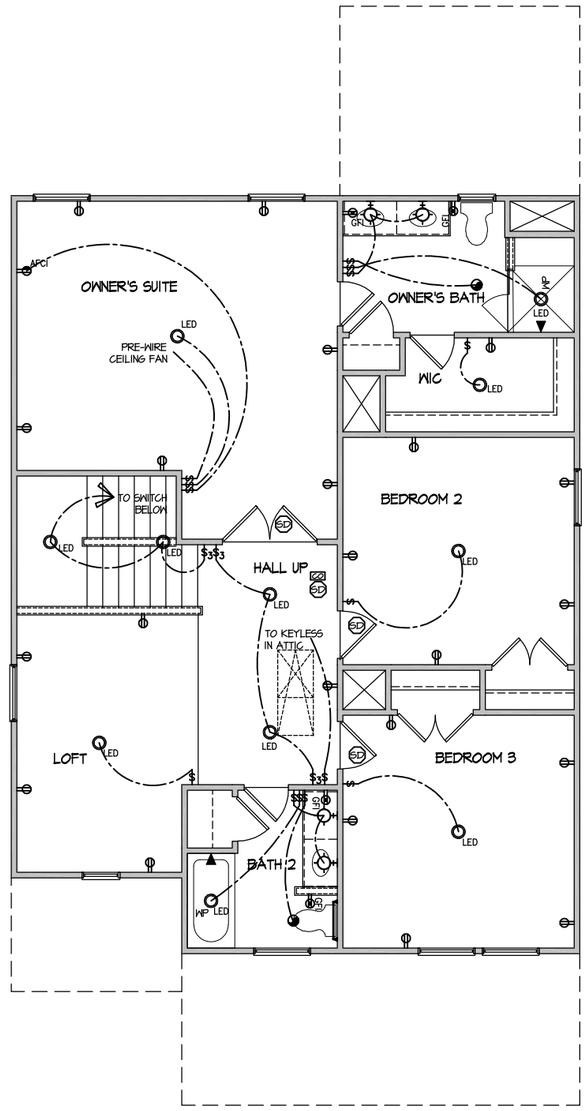

ELECTRICAL PLAN
SECOND FLOOR - ELEV. 1

SCALE: 1/8" = 1'-0"

FILE: Lot 00.0024.dwg DATE: 7/9/2025 1:23 PM

MASTER PLAN INFORMATION	
REVISION	DATE
1-RALE	07-06-2018
UPDATED DATE	
05-19-2025	

DRAWN BY: ITS

DATE: 07/09/2025

PLAN NO. 1930

DRB HOMES

HOUSE NAME: MALBEC

DRAWING TITLE: SECOND FLOOR ELECTRICAL

SHEET No. E1.2

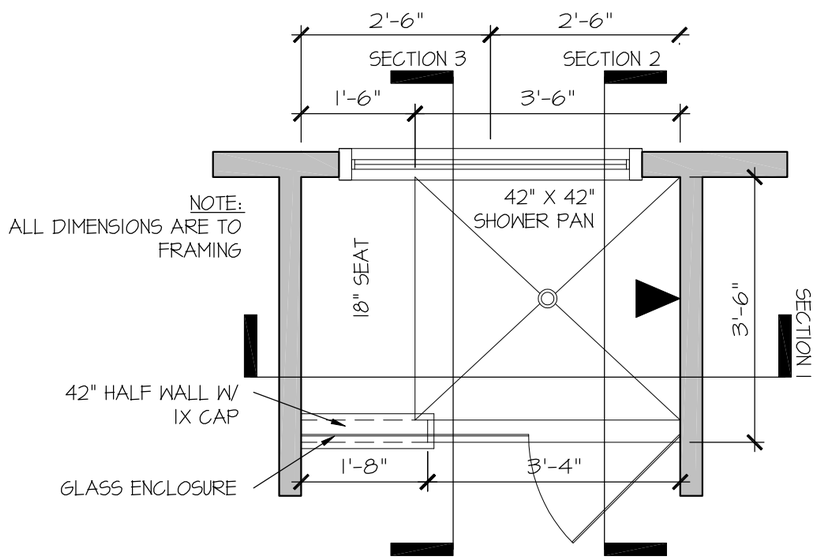

RALE TILE SHOWER
42" X 42" W 18" SEAT

SCALE: 1/2" = 1'-0"

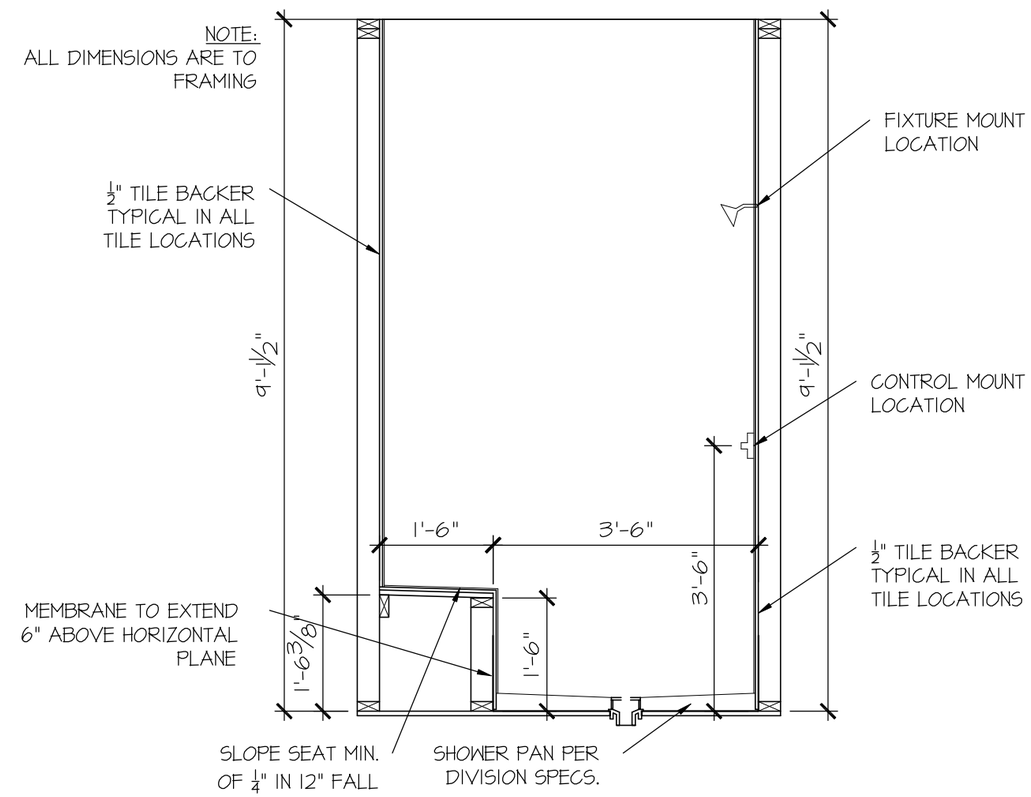

RALE TILE SHOWER
SECTION A

SCALE: 1/2" = 1'-0"

CONSULTANT LOGO

SEAL

DRAWN BY: L. BEAVERS
DATE: 9/1/22
PLAN NO.
11 X 17 SCALE
24 X 36 SCALE

DRB HOMES

HOUSE NAME:

DRAWING TITLE
RALE TILE SHOWER DETAIL

SHEET No.
P1.1

FILE: RALE TILE SHOWER DETAIL 8-2022.dwg DATE: 09-19-2022

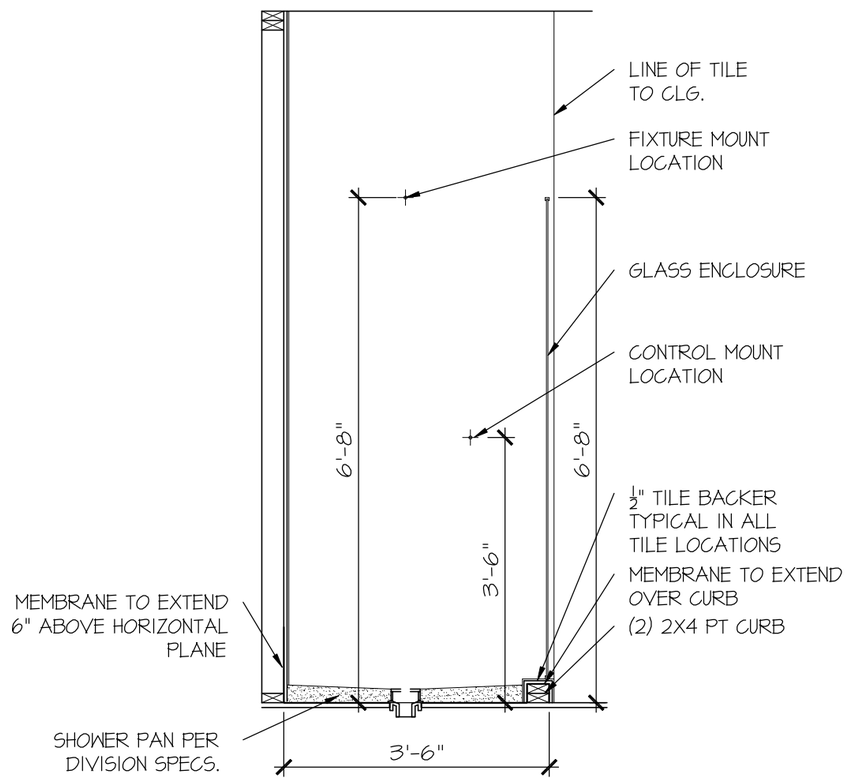

RALE TILE SHOWER
SECTION B

SCALE: 1/2" = 1'-0"

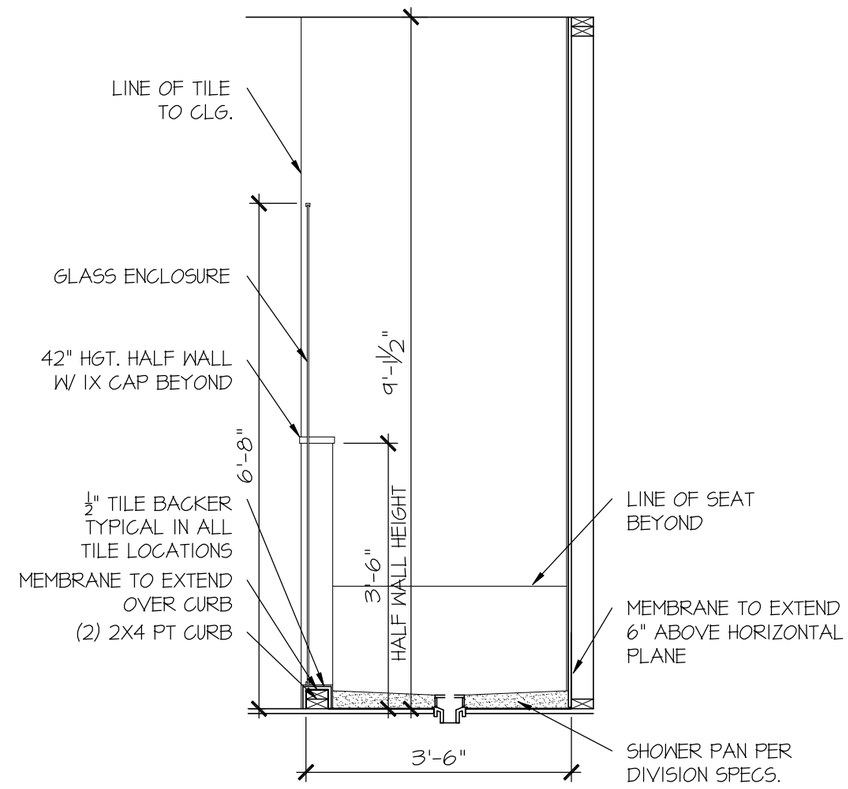

RALE TILE SHOWER
SECTION C

SCALE: 1/2" = 1'-0"

FILE: RALE TILE SHOWER DETAIL 8-2022.dwg DATE: 09-19-2022

CONSULTANT LOGO

SEAL

DRAWN BY:	L. BEAVERS
DATE:	9/1/22
PLAN NO.	
11 X 17 SCALE	
24 X 36 SCALE	

DRB HOMES

HOUSE NAME:

DRAWING TITLE
RALE TILE SHOWER DETAIL

SHEET No.
P1.12

GENERAL STRUCTURAL NOTES

- DESIGN IS BASED ON 2018 NORTH CAROLINA STATE BUILDING CODE: RESIDENTIAL CODE.
- WOOD FRAME ENGINEERING IS BASED ON NDS, "NATIONAL DESIGN SPECIFICATION FOR WOOD CONSTRUCTION" - LATEST EDITION.
- DESIGN LOADS:
  - ROOF — DEAD = 7 PSF T.C., 10 PSF B.C.; LIVE = 16 PSF; LOAD DURATION FACTOR = 1.25
  - FLOOR — LIVE = 40 PSF (30 PSF @ SLEEPING AREAS); DEAD = 10 PSF (I-JOISTS & SOLID SAWN); 10 PSF T.C., 5 PSF B.C. (TRUSSES); (ADD'L 10 PSF @ TILE)
  - LATERAL — 120 MPH, EXPOSURE B. SEISMIC A/B.
  - SOIL — 2,000 PSF ASSUMED ALLOWABLE BEARING PRESSURE (TO BE VERIFIED BY BUILDER)

GENERAL FRAMING

- ALL TYP. NAIL FASTENER REQUIREMENTS ARE NOTED IN STANDARD CONNECTIONS TABLE OR ON PLANS. ALL NAILS SPECIFIED ARE MIN DIAMETER AND LENGTH REQUIRED FOR CONNECTION. ALL HANGER NAILS SHALL BE INSTALLED PER MANUFACTURER'S REQUIREMENTS FOR MAX CHARTED CAPACITY. NOTE: HANGERS USE COMMON NAIL DIAMETERS NOT TYPICAL FRAMING GUN NAILS.
- REFER TO FASTENING SCHEDULE TABLE R602.3(1) FOR ALL CONNECTIONS, TYP. U.N.O.
- EXT. & INT. BRG WALLS SHALL BE 2x4 OR 2x6 (AS SHOWN ON PLANS) @ 16" O.C. SPF OR SYP "STUD" GRADE LUMBER, OR BETTER, U.N.O.
  - WALLS OVER 12' TALL SHALL BE PER PLAN.
- ALL HEADERS, BEAMS & OTHER STRUCTURAL MEMBERS SHALL BE SPRUCE-PINE-FIR #2 (SPF) OR SOUTHERN PINE #2 (SYP) LUMBER, OR BETTER (KILN-DRIED). ALL HEADERS HAVE BEEN DESIGNED BASED ON CALCULATED LOADS & SIZED ACCORDINGLY. CODE TABLES HAVE NOT BEEN USED.
- ALL NON-BEARING INTERIOR STUD WALLS SHALL BE CONSTRUCTED WITH 2x 'STUD' GRADE MEMBERS SPACED @ 16" O.C. (MAX., U.N.O.)
  - HEADERS IN NON-LOAD BEARING WALLS SHALL BE: (1)2x4/6 FLAT @ OPENINGS UP TO 4', (2)2x4/6 FLAT UP TO 8'.
- ALL FRAMING LUMBER SHALL BE DRIED TO 15% MC (KD-15).
- ENGINEERED LUMBER BEAMS TO MEET OR EXCEED THE FOLLOWING:
  - 'LSL' - Fb=2325 psi; Fv=310 psi; E=1.55x10^6 psi
  - 'LVL' - Fb=2600 psi; Fv=285 psi; E=2.0x10^6 psi
  - 'PSL' - FB=2900 PSI; FV=290 PSI; E=2.0X10^6 PSI
- M+K SHALL BE FULLY INDEMNIFIED FOR ANY AND ALL ISSUES RESULTING FROM OR RELATED TO ANY BUILDING COMPONENT IF THE OWNER DOES NOT SUBMIT THE COMPONENT SHOP DRAWINGS TO M+K FOR STRUCTURAL REVIEW PRIOR TO FABRICATION, DELIVERY, OR INSTALLATION.
- FOR 2 & 3 PLY BEAMS OF EQUAL WIDTH, FASTEN PLIES TOGETHER WITH 3 ROWS OF 3"x0.120" NAILS @ 8" O/C OR 2 ROWS 1/4"x3½" SIMPSON SDS SCREWS (OR 3½" TRUSSLOK SCREWS) @ 16" O/C. USE A MINIMUM OF 3 ROWS FOR BEAM DEPTHS OF 14" OR GREATER. APPLY FASTENING AT BOTH FACES FOR 3-PLY CONDITION. LOCATE TOP & BOTTOM NAILS/SCREWS 2" FROM EDGE. SOLID 3½" OR 5¼" BEAMS ARE ACCEPTABLE. USE 2 ROWS OF NAILS FOR 2x6 & 2x8 MEMBERS.
- FOR 4 PLY BEAMS OF EQUAL WIDTH, FASTEN PLIES TOGETHER WITH 3 ROWS OF 1/4"x6" SIMPSON SDS SCREWS (OR 6 3/4" TRUSSLOK SCREWS) @ 16" O/C. USE A MINIMUM OF 4 ROWS FOR BEAM DEPTHS OF 14" OR GREATER. APPLY FASTENING AT BOTH FACES (ONE SIDE ONLY FOR TRUSSLOK SCREWS). LOCATE TOP AND BOTTOM SCREWS 2" FROM EDGE. A SOLID 7" BEAM IS ACCEPTABLE.
- ALL HEADERS SHALL BE SUPPORTED BY (1)2x JACK STUD & (1)2x KING STUD, MINIMUM.
  - THE NUMBER OF STUDS SPECIFIED AT A SUPPORT INDICATES THE NUMBER OF JACK STUDS REQUIRED, U.N.O..
- ALL MULTI-PLY STUDS TO BE FASTENED TOGETHER w/ 3"X0.131" NAILS @ 24" O.C. (MIN.), EACH PLY.
- PROVIDE SOLID BLOCKING IN FLOOR SYSTEM UNDER ALL POSTS CONTINUOUS TO FND./BEARING. BLOCKING TO MATCH POST ABOVE.
- FASTEN 2x WOOD PLATES TO TOP FLANGE OF STEEL BEAMS WITH P.A.F.'s ('HILTI' X-CF PINS OR EQUAL) @ 16" O.C. STAGGERED, OR 1/2" DIA. BOLTS @ 48" O.C. STAGGERED.
- ALL EXTERIOR 4x4 WOOD POSTS SHALL HAVE SIMPSON BCS2-2/4 CAP & ABW44Z BASE, U.N.O.

CONNECTION SPECIFICATIONS (TYP. U.N.O.)

DESCRIPTION OF BLDG. ELEMENT	3"x0.131" NAILS	3"x0.120" NAILS
JOIST TO SOLE PLATE	(3) TOENAILS	(3) TOENAILS*
SOLE PLATE TO JOIST/BLK'G.	(3) NAILS @ 4" o.c.	(3) NAILS @ 4" o.c.
STUD TO SOLE PLATE	(2) TOENAILS	(3) TOENAILS*
TOP OR SOLE PLATE TO STUD	(2) NAILS	(3) NAILS
RIM TO TOP PLATE	TOENAILS @ 8" o.c.	TOENAILS @ 6" o.c.*
BLK'G. BTWN. JOISTS TO TOP PL.	(3) TOENAILS	(3) TOENAILS*
DOUBLE STUD	NAILS @ 24" o.c.	NAILS @ 16" o.c.
DOUBLE TOP PLATE	NAILS @ 24" o.c.	NAILS @ 16" o.c.
DOUBLE TOP PLATE LAP SPLICE	(9) NAILS IN LAPPED AREA	(11) NAILS IN LAPPED AREA
TOP PLATE LAP @ CORNERS & INTERSECTING WALLS	(2) NAILS	(2) NAILS

* 2½"x0.113 IS AN ACCEPTABLE ALTERNATIVE TO A 3"x0.120", SAME SPACING OR NUMBER OF NAILS. (ONLY ACCEPTABLE WHERE * ARE SHOWN)

FLOOR FRAMING

- I-JOISTS/TRUSSES SHALL BE DESIGNED BY MANUF. TO MEET OR EXCEED L/480 LIVE LOAD DEFLECTION CRITERIA. (EXCLUDES MARBLE FLOORS - CONTACT M&K FOR MARBLE FLOOR DESIGNS)
- AT I-JOIST FLOORS, PROVIDE 1 1/8" MIN. OSB RIM BOARD.
- METAL HANGERS SHALL BE SPECIFIED BY MANUFACTURER, U.N.O.
- FLOOR SHEATHING SHALL BE 23/32" A.P.A. RATED 'STURD-I-FLOOR' 24" O.C, EXPOSURE 1 (OR APPROVED EQUAL) WITH TONGUE AND GROOVE EDGES. FASTEN TO FRAMING MEMBERS W/ GLUE AND
  - 2 ½" x 0.131" NAILS @ 6"o.c. @ PANEL EDGES & @ 12"o.c. FIELD.
  - 2 ⅜" x 0.120" NAILS @ 4" O.C. @ PANEL EDGES & @ 8" O.C. FIELD.
  - 2 ⅜" x 0.113" NAILS @ 3" O.C. @ PANEL EDGES & @ 6" O.C. IN FIELD.
  - #6 x 2" MIN. SCREWS @ 6" O.C. @ PANEL EDGES & @ 12" O.C. FIELD.

ROOF FRAMING

- BAY WINDOWS & SHED ROOFS (UP TO 6' SPAN) CAN BE 2x4 OR 2x6 RAFTERS & CEILING JOISTS @ 16/24" O.C.
- FASTEN EACH ROOF TRUSS TO TOP PLATE W/ SIMPSON H2.5T CLIP (OR APPROVED EQUAL) @ ALL BEARING POINTS. PROVIDE (2) H2.5T CLIPS AT 2-PLY GIRDER TRUSSES, (3) H2.5T CLIPS AT 3-PLY GIRDER TRUSSES & ROOF BEAMS - AT ALL BEARING POINTS.
- METAL HANGERS SHALL BE SPECIFIED BY THE MANUFACTURER, U.N.O.
- ERECT AND INSTALL ROOF TRUSSES PER WTCA & TPI'S BCSI 1-08 "GUIDE TO GOOD PRACTICE FOR HANDLING, INSTALLING & BRACING OF METAL PLATE CONNECTED WOOD TRUSSES."
- SUPPORT PORCH & SHORT SPAN ROOF TRUSSES (MAX 7' SPAN) w/ 2x4 LEDGER FASTENED TO:
  - RIM BOARD w/ (2) 3"x0.131" NAILS @ 16" O.C. MAX. (I-JOISTS)
  - TRUSS VERTICALS w/ (3) 3"x0.131" NAILS @ 19.2" O.C. MAX. (FLOOR TRUSSES)
- ROOF SHEATHING SHALL BE 7/16" A.P.A. RATED SHEATHING 24/16 EXPOSURE 1 (OR APPROVED EQUAL). FASTEN TO FRAMING MEMBERS
  - w/ 2 ½" x 0.131" NAILS @ 6"o.c. @ PANEL EDGES & @ 12" O.C. FIELD.
  - w/ 2 ⅜" x 0.120" NAILS @ 4"o.c. @ PANEL EDGES & @ 8" O.C. FIELD.
  - w/ 2 ⅜" x 0.113" NAILS @ 3"o.c. @ PANEL EDGES & @ 6" O.C. FIELD.

HOLD-DOWN SCHEDULE

SYMBOL	SPECIFICATION
HD-1	SIMPSON HTT4 HOLD-DOWN * (⅝" DIA. ANCHOR)
HD-2	SIMPSON MSTC66 STRAP TIE (CENTER STRAP ON FLOOR SYSTEM U.N.O.) -OR- MSTC66B3 ALTERNATE
HD-3	SIMPSON STHD14/STHD14RJ

* UTILIZE THE SSTB24 ANCHOR BOLT @ ALL MONOSLAB & INTERIOR RAISED SLAB (I.E. THICKENED SLABS, FOOTINGS) CONDITIONS. MINIMUM 24" MIN. FOOTING THICKNESS REQUIRED.
EPOXY-SET ALTERNATE FOR MONOSLAB & INTERIOR RAISED SLAB CONDITIONS ONLY: UTILIZE SIMPSON 'SET' EPOXY SYSTEM TO FASTEN THREADED ROD INTO CONCRETE FOUNDATION. PROVIDE 10" (FOR 5/8" DIA.) OR 15" (FOR 7/8" DIA.) MIN. EMBEDMENT INTO CONCRETE.
INSTALL PER MANUF. INSTRUCTIONS. MINIMUM 16" FOOTING THICKNESS REQ'D.
DO NOT LOCATE ANCHORS WITHIN 1 3/4" OF EDGE OF CONCRETE.

SD2.1 REFERS TO SD2.1A FOR LVL/PSL/LSL BEAMS OR SD2.1B FOR FLITCH BEAMS OR SD2.1C FOR STEEL BEAMS

LATERAL BRACING & SHEAR WALL SHEATHING SPECIFICATIONS

THIS MODEL HAS BEEN DESIGNED TO RESIST LATERAL FORCES RESULTING FROM:

120 MPH WIND IN 2018 NCSBC:RC

(120 MPH WIND SPEED IN ASCE 7-10 WIND MAP, PER IRC R301.2.1.1)
EXP. B, RISK CAT. 2 & SEISMIC CAT. A/B.

THE DESIGN WAS COMPLETED PER 2015 IBC (SECTION 1609) & ASCE 7-10, AS PERMITTED BY R301.1.3 OF THE 2018 NCSBC:RC, OR THE SIMPLIFIED PRESCRIPTIVE PROCEDURE IN ACCORDANCE WITH THE 2015 IRC IF THE PARAMETERS OF SECTION R602.12 COMPLY. ACCORDINGLY, THIS MODEL, AS DOCUMENTED AND DETAILED HEREWITHIN, IS ADEQUATE TO RESIST THE CODE REQUIRED LATERAL FORCES.

DESIGN WIND UPLIFT LOADS HAVE BEEN CALCULATED UTILIZING ASCE 7-10 (ACCEPTED ENGINEERING PRACTICE) AS ALLOWED PER 2018 NCSBC:RC SECTION R802.11.1.1. THIS MODEL HAS BEEN DETAILED WHERE REQUIRED & ENGINEERED TO RESIST THE WIND UPLIFT LOAD PATH PER SECTIONS R602.3.5& R802.11.

EXT. WALL SHEATHING SPECIFICATION

- 7/16" OSB OR 15/32" PLYWOOD:
  FASTEN SHEATHING w/ 2 ⅜"x0.113" NAILS @ 6" O.C. AT EDGES & @ 12" O.C. IN THE PANEL FIELD. TYP, U.N.O.
- HORIZONTAL BLOCKING OF EXT. WALL/SHEAR WALL PANEL EDGES IS NOT REQUIRED BY THIS DESIGN EXCEPT FOR THOSE AREAS SPECIFICALLY NOTED.
- ALL EXT. WALLS SHALL BE CONTINUOUSLY SHEATHED AND ARE CONSIDERED SHEAR WALLS.
- ALT. STAPLE CONNECTION SPEC: 1½" 16 GA STAPLES (7/16" CROWN) @ 3" O.C. AT EDGES & @ 6" O.C IN FIELD.

BLOCKED PANEL EDGES

- AT DESIGNATED AREAS - FASTEN SHEATHING w/ 2 ⅜" x 0.113" NAILS @ 6" O.C. AT ALL PANEL EDGES AND 12" O.C. IN THE PANEL FIELD OR 1 ¾" 16 GA STAPLES (7/16" CROWN) @ 3" O.C. AT EDGES & @ 6" O.C IN FIELD. ALL SHEATHING PANELS SHALL BE ORIENTED AND INSTALLED FULL HEIGHT OF SHEAR WALL OR 2x HORIZONTAL BLOCKING SHALL BE PROVIDED TO SUPPORT ALL UNSUPPORTED PANEL EDGES & EDGE FASTENING.

3" O.C. EDGE NAILING

- AT DESIGNATED AREAS - FASTEN PANEL EDGES OF WOOD STRUCTURAL WALL SHEATHING TO FRAMING w/ 8d NAILS @ 3" O.C. NO STAPLE ALTERNATIVE AVAILABLE AT THIS SPEC. ALL SHEATHING PANELS SHALL BE ORIENTED AND INSTALLED FULL HEIGHT OF SHEAR WALL OR 2x HORIZONTAL BLOCKING SHALL BE PROVIDED TO SUPPORT UNSUPPORTED PANEL EDGES AND 3" O.C. EDGE FASTENING.

NOTES

- SEE CONNECTION SPECIFICATIONS CHART FOR STANDARD SHEAR TRANSFER DETAILING. IF ADDITIONAL CAPACITY IS REQUIRED BY DESIGN, IT WILL BE SPECIFICALLY NOTED ON PLAN.
- DESIGN ASSUMES 16" O.C MAX. STUD SPACING, U.N.O.
- ALL STRUCTURAL PANELS ARE TO BE DIRECTLY APPLIED TO STUD FRAMING.
- PRE-MANUFACTURED PANELIZED WALLS: FASTEN TOGETHER END STUDS OF WALL PANELS SHEATHED w/ OSB OR PLYWOOD w/ 3" x 0.120" NAILS @ 4" O.C. (THRU ONE SIDE ONLY)

— — — INDICATES EXTENT OF INT. OSB SHEARWALL OR 3" O.C. OSB SHEARWALL.

▶ INDICATES HOLDOWN BELOW

VENEER LINTEL SCHEDULE

SPAN (MAX)	HEIGHT OF VENEER ABOVE LINTEL	STEEL ANGLE SIZE
3'-0"	20 FT. MAX	L3"x3"x¼"
6'-0"	3 FT. MAX	L3"x3"x¼"
	12 FT. MAX	L4"x3"x¼"
	20 FT. MAX	L5"x3½"x5/16"
8'-0"	3 FT. MAX	L4"x4"x¼" *
	12 FT. MAX	L5"x3½"x5/16"
	16 FT. MAX	L6"x3½"x⅜"
9'-6"	12 FT. MAX	L6"x3½"x5/16"
16'-0"	2 FT. MAX	L7"x4"x½" **
	3 FT. MAX	L8"x4"x½" **

ALL LINTELS:
- SHALL SUPPORT 2 ⅝" - 3 ½" VENEER w/ 40 psf MAXIMUM WEIGHT.
  < 16' SHALL HAVE 4" MIN. BEARING
  >= 16' SHALL HAVE 8" MIN. BEARING
  < 16' SHALL NOT BE FASTENED BACK TO HEADER.
  >= 16' SHALL BE FASTENED BACK TO WOOD HEADER IN WALL @48"o.c. w/ ½" DIA. x 3 ½" LONG LAG SCREWS IN 2" LONG VERTICALLY SLOTTED HOLES.
- MAX. VENEER HT. APPLIES TO ANY PORTION OF BRICK OVER THE OPENING.
- ALL LINTELS SHALL BE LONG LEG VERTICAL.
- WHEN SUPPORTING VENEER < 3" WIDE THE EXTERIOR TOE OF THE HORIZONTAL LEG MAY BE CUT IN THE FIELD TO BE 3 ¼" WIDE OVER THE BEARING LENGTH ONLY. THIS IS TO ALLOW FOR MORTAR JOINT FINISHING.
- SEE STRUCTURAL PLANS FOR ANY LINTEL CONDITION NOT ENCOMPASSED BY THE ABOVE PARAMETERS. FOR ANY LINTEL FASTENED BACK TO BEAM, FASTENERS SHALL MAINTAIN A 2½" (MINIMUM) CLEAR DISTANCE FROM BOTTOM OF BEAM.

* FOR QUEEN VENEER USE L4x3x¼".
** FOR 3½" VENEER ONLY. SEE PLAN FOR VENEER SUPPORT IF VENEER < 3½" THICK.

LEGEND

- INTERIOR BEARING WALL
- BEARING WALL ABOVE
- BEAM / HEADER
- INDICATES SHEAR WALL & EXTENT
- EXTENT OF OVERFRAMING

⊥L METAL HANGER

* INDICATES POST ABOVE. PROVIDE SOLID BLOCKING UNDER POST OR JAMB ABOVE.

▶ INDICATES HOLD-DOWN OR STRAP. REFER TO SCHEDULE.

NON-BEARING HEADER SCHEDULE

SPAN	2x4 NON-BEARING PARTITION WALL	2x6 NON-BEARING PARTITION WALL
UP TO 3'-0"	(1)2x4 FLAT	(1)2x6 FLAT
UP TO 6'-0"	(2)2x4	(3)2x4
UP TO 8'-0"	(2)2x6	(3)2x6
UP TO 12'-0"	(2)2x8	(3)2x8

NOTES:
- ALL NON-BEARING INTERIOR STUD WALLS SHALL BE CONSTRUCTED WITH 2x 'STUD' GRADE MEMBERS SPACED @ 24" O.C. (MAX.)

GENERAL STRUCTURAL NOTES

FOUNDATION

- DESIGN IS BASED ON 2018 NORTH CAROLINA STATE BUILDING CODE: RESIDENTIAL CODE.
- FOOTING DESIGN - 2,000 PSF ALLOWABLE SOIL BEARING PRESSURE IS ASSUMED. BUILDER/CONTRACTOR MUST VERIFY.
- FASTEN 2x SILL PLATES TO FND WITH A MINIMUM OF 2 ANCHORS PER PLATE, 12" MAX. FROM PLATE ENDS - UTILIZING:
  - 1/2" DIA. ANCHOR BOLTS @ 6'-0" O.C, 7" MIN. EMBEDMENT (CONC), 15" MIN. EMBEDMENT (CMU)
  - SIMPSON MASA ANCHOR STRAPS @ 6'-0" O.C. (CONC)
  - SIMPSON MAB23 ANCHOR STRAPS @ 2'-8" O.C. (CMU)

  (REFER TO DETAILS FOR 10' TALL WALL ANCHOR REQUIREMENTS)
- ALL LUMBER EXPOSED TO WEATHER OR IN CONTACT W/ CONCRETE OR CMU SHALL BE PRESERVATIVE TREATED SOUTHERN PINE #2.
- BUILDER TO VERIFY CORROSION-RESISTANCE COMPATIBILITY OF HARDWARE & FASTENERS IN CONTACT w/ PRESERVATIVE-TREATED WOOD. CONTACT LUMBER & HARDWARE SUPPLIERS TO COORD.
- BASEMENT INTERIOR BEARING WALLS & EXTERIOR WALK-OUT BASEMENT WALLS SHALL BE 2x6 @ 16" O.C. SPF OR SYP, "STUD" GRADE OR BETTER.
- CONCRETE DESIGN BASED ON ACI 318. CONCRETE SHALL ATTAIN THE FOLLOWING MIN. COMPRESSIVE STRENGTHS IN 28 DAYS, U.N.O.:
  - f'c = 4,000 psi: .... FOUNDATION WALLS
  - 2,500 psi: .... FOOTINGS & INTERIOR SLABS ON GRADE
  - 3,000 psi: .... GARAGE & EXTERIOR SLABS ON GRADE
  - fy = 60,000 psi
- BASEMENT FOUNDATION WALL DESIGN BASED ON:
  - 9' OR 10' HEIGHT (AS NOTED ON PLANS) - TALLER WALLS MUST BE ENGINEERED.
  - NOMINAL WIDTH (9 ½" FOR 10" THICK WALL).
- BASEMENT WALL DESIGN IS BASED ON 60 PCF BACKFILL SOIL TYPE CLASSIFICATIONS (SC, ML-CL, OR CL).
- BASEMENT WALLS SHALL BE BRACED, PRIOR TO BACKFILLING, BY ADEQUATE TEMPORARY BRACING OR INSTALL 1st FLOOR DECK.
- PROVIDE (2) #5 BARS AROUND ALL SIDES OF OPENINGS IN CONCRETE BSMT. FND. WALL WITH 2" CLEAR. REINFORCEMENT SHALL EXTEND 12" PAST CORNER OF OPENING IN ALL DIRECTIONS.
  - FOR OPENINGS UP TO 36", PROVIDE MINIMUM 10" CONCRETE DEPTH OVER OPENING OR (3)2x10 w/ (2)2x6 JACK STUDS, U.N.O.
  - LARGER OPENINGS SHALL BE PER PLAN.
- ALL CONCRETE EXPOSED TO THE WEATHER SHALL NOT HAVE LESS THAN 5% OR MORE THAN 7% AIR ENTRAINMENT.
- ALL FOOTINGS SHALL BEAR AT LEAST 12" BELOW FINISH GRADE.
- FOOTINGS AND SLABS ON GRADE SHALL BEAR ON VIRGIN SOIL OR 95% COMPACTED FILL.
- PROVIDE CONTROL JOINTS AT ALL INSIDE CORNERS OF SLAB EDGES, AND OTHER LOCATIONS WHERE SLAB CRACKS ARE LIKELY TO DEVELOP.
  - JOINTS SHALL BE LOCATED @ 10'-0" O.C. (RECOMMENDED) OR 15'-0" O.C. (MAXIMUM)
  - JOINT GRID PATTERN SHALL BE AS CLOSE TO SQUARES AS POSSIBLE (1:1 RATIO), WITH A MAXIMUM OF 1:1.5 RATIO
  - CONTROL JOINTS SHALL NOT BE INSTALLED IN STRUCTURAL SLABS
- CONCRETE MASONRY UNITS (CMU) SHALL BE ASTM C90 WITH A MIN. COMPRESSIVE STRENGTH OF 1900 psi (F'm=1500 psi). MORTAR SHALL BE ASTM C270, TYPE S. CMU DESIGN PER ACI 530 & 530.1.
- CMU FOUNDATION WALLS SHALL HAVE 'DUR-O-WALL' HORIZONTAL JOINT REINFORCEMENT (OR EQUAL) - 9 GA. MINIMUM @ 16" O.C.
- PROVIDE 2x6 (MIN.) x 16" LONG P.T. PLATE ON TOP OF ALL CRAWL SPACE PIERS. ALL PIERS SHALL BE FASTENED PER ANCHORAGE SPECIFICATIONS NOTED ABOVE. TOP 2 COURSES (MIN.) OF PIER TO BE GROUTED SOLID (8 COURSE MAX. PIER HEIGHT).
- PROVIDE 2x6 P.T. PLATE ON INTERIOR CRAWL SPACE WALLS, FASTENED PER ANCHORAGE SPECIFICATION NOTED ABOVE. TOP 2 COURSES (MIN.) OF WALL TO BE GROUTED SOLID (8 COURSE MAX. WALL HEIGHT)
- DIMENSIONS BY OTHERS, BUILDER TO VERIFY.
- BUILDER TO VERIFY THAT MODEL HAS BEEN ADEQUATELY TREATED BY A LICENSED AND BONDED PEST CONTROL COMPANY FOR SUBTERRANEAN TERMITES. METHOD AND TYPE OF TREATMENT TO BE DETERMINED BY PEST CONTROL COMPANY.

MEANS & METHODS NOTES

THE STRUCTURE IS DESIGNED TO BE SELF SUPPORTING AND STABLE AFTER THE BUILDING IS FINISHED AND ALL PLAN, DETAIL, AND NOTE SPECIFICATIONS HAVE BEEN COMPLETED. IT IS THE CONTRACTOR'S SOLE RESPONSIBILITY TO DETERMINE THE ERECTION PROCEDURES AND SEQUENCE TO INSURE THE SAFETY OF THE BUILDING AND ITS COMPONENTS DURING CONSTRUCTION. THIS INCLUDES, BUT IS NOT LIMITED TO, THE ADDITION OF NECESSARY SHORING, SHEETING, TEMPORARY BRACING, GUYS, AND TIE-DOWNS. CONTRACTOR SHALL BE RESPONSIBLE FOR ALL SHORING AND BRACING REQUIRED TO STABILIZE AND PROTECT EXISTING AND ADJACENT STRUCTURES AND SYSTEMS DURING COURSE OF DEMOLITION AND CONSTRUCTION OF THE PROJECT.

STRUCTURAL DESIGN AND SPECIFICATIONS ASSUME THAT ALL SUPPORTING AND NON-SUPPORTING ELEMENTS IN CONTACT WITH FLOOR FRAMING ARE LEVEL, INCLUDING, BUT NOT LIMITED TO; FOUNDATIONS, SLABS ON GRADE, BEAMS, WALLS, AND NON-BEARING ELEMENTS. IT IS THE CONTRACTOR'S RESPONSIBILITY TO VERIFY LEVELNESS AND MAKE ADJUSTMENTS AS NECESSARY, INCLUDING CONSIDERATION OF THOSE AREAS THAT MAY BE WITHIN CONTRACTUAL, INDUSTRY, OR WARRANTY TOLERANCES.

ADDITIONAL NOTES FOR TRUSS & I-JOIST MANUFACTURER

ROOF TRUSS, FLOOR TRUSS AND ENGINEERED JOISTS SHALL BE DESIGNED TO MEET THE DIFFERENTIAL DEFLECTION CRITERIA BELOW, UNLESS NOTED OTHERWISE ON PLAN.

TRUSSES/JOISTS SHALL BE DESIGNED SO THAT DIFFERENTIAL DEFLECTION BETWEEN ADJACENT PARALLEL TRUSSES/JOISTS OR GIRDER TRUSSES/FLUSH BEAMS DO NOT EXCEED THE FOLLOWING:

A. ROOF TRUSSES: 1/4" DEAD LOAD
B. FLOOR TRUSSES, ATTIC TRUSSES, & I-JOISTS: 1/8" DEAD LOAD
C. FLOOR TRUSSES & ATTIC TRUSSES ADJACENT TO FLOOR FRAMING BY OTHERS: LIMIT ABSOLUTE TRUSS DEFLECTION TO 3/16" DEAD LOAD. (NOT DIFFERENTIAL DEFLECTION)

ALTERNATE F.J MANUFACTURERS

- FLOOR JOISTS BY MANUFACTURER'S OTHER THAN THOSE SHOWN ON PLAN SHALL CONFORM TO THE APA PERFORMANCE RELATED I-JOISTS DESIGN AND CONSTRUCTION GUIDE. MINIMUM JOIST PROPERTIES INCLUDING, BUT NOT LIMITED TO, ALLOWABLE SHEAR, ALLOWABLE MOMENT, STRENGTH, AND STIFFNESS, SHALL MEET OR EXCEED THOSE LISTED FOR THE PRI-60 SERIES I-JOISTS. ALL ALLOWABLE HOLES, BEARING STIFFENERS, AND JOIST TO JOIST CONNECTIONS ARE PER THE JOIST MANUFACTURER.

seal: 7/15/25

NORTH CAROLINA PROFESSIONAL ENGINEER SEAL 036012 JOSEPH T. RICKER

© copyright : MULHERN & KULP Structural Engineering, Inc.

MULHERN+KULP RESIDENTIAL STRUCTURAL ENGINEERING
300 Brookside Ave, Building 4 ▸ Ambler, PA 19002
p 215-646-8001 ▸ mulhernkulp.com
NC LICENSE #C-3825

M&K project number: 126-22076

project mgr: JTR
drawn by: NLD
issue date: 07-15-25

REVISIONS:

date:	initial:

DRB HOMES

STRUCTURAL NOTES
FARM AT NEIL'S CREEK
LOT 24 - MALBEC 1
RALEIGH, NC

sheet: S0.0

FILE: RLH - Neil's Creek - Lot 24 - Structurals DATE: 7/15/2025 1:39 PM

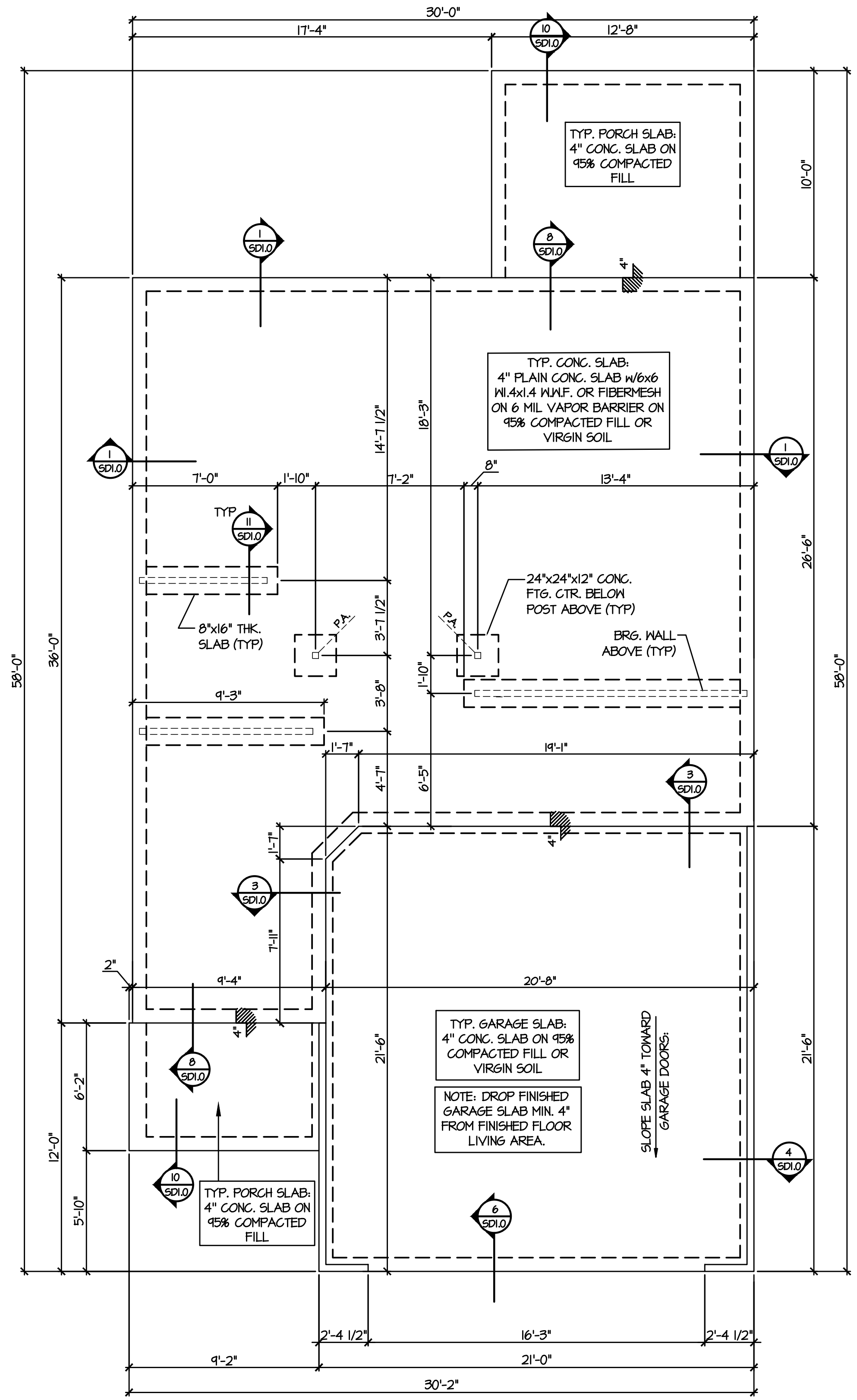

MONO SLAB FOUNDATION PLAN

SCALE: 1/8"=1'-0"

LEGEND

- INTERIOR BEARING WALL
- BEARING WALL ABOVE
- BEAM / HEADER
- INDICATES SHEAR WALL & EXTENT
- EXTENT OF OVERFRAMING
- METAL HANGER
- INDICATES POST ABOVE. PROVIDE SOLID BLOCKING UNDER POST OR JAMB ABOVE.
- INDICATES HOLD-DOWN OR STRAP. REFER TO SCHEDULE.

REFER TO S0.0 FOR TYPICAL STRUCTURAL NOTES & SCHEDULES

seal: 7/15/25

NORTH CAROLINA PROFESSIONAL ENGINEER SEAL 056012 JOSEPH T. RICKER

© copyright MULHERN & KULP Structural Engineering, Inc.

MULHERN+KULP
RESIDENTIAL STRUCTURAL ENGINEERING
300 Brookside Ave, Building 4 • Ambler, PA 19002
p 215-646-8001 • mulhernkulp.com
NC LICENSE #C-3825

M&K project number: 126-22076

project mgr: JTR
drawn by: NLD
issue date: 07-15-25

REVISIONS:
date: initial:

DRB HOMES

FOUNDATION PLANS
FARM AT NEIL'S CREEK
LOT 24 – MALBEC 1
RALEIGH, NC

sheet: S1.0

FILE: RLH - Neil's Creek - Lot 24 - Structurals DATE: 7/15/2025 1:39 PM

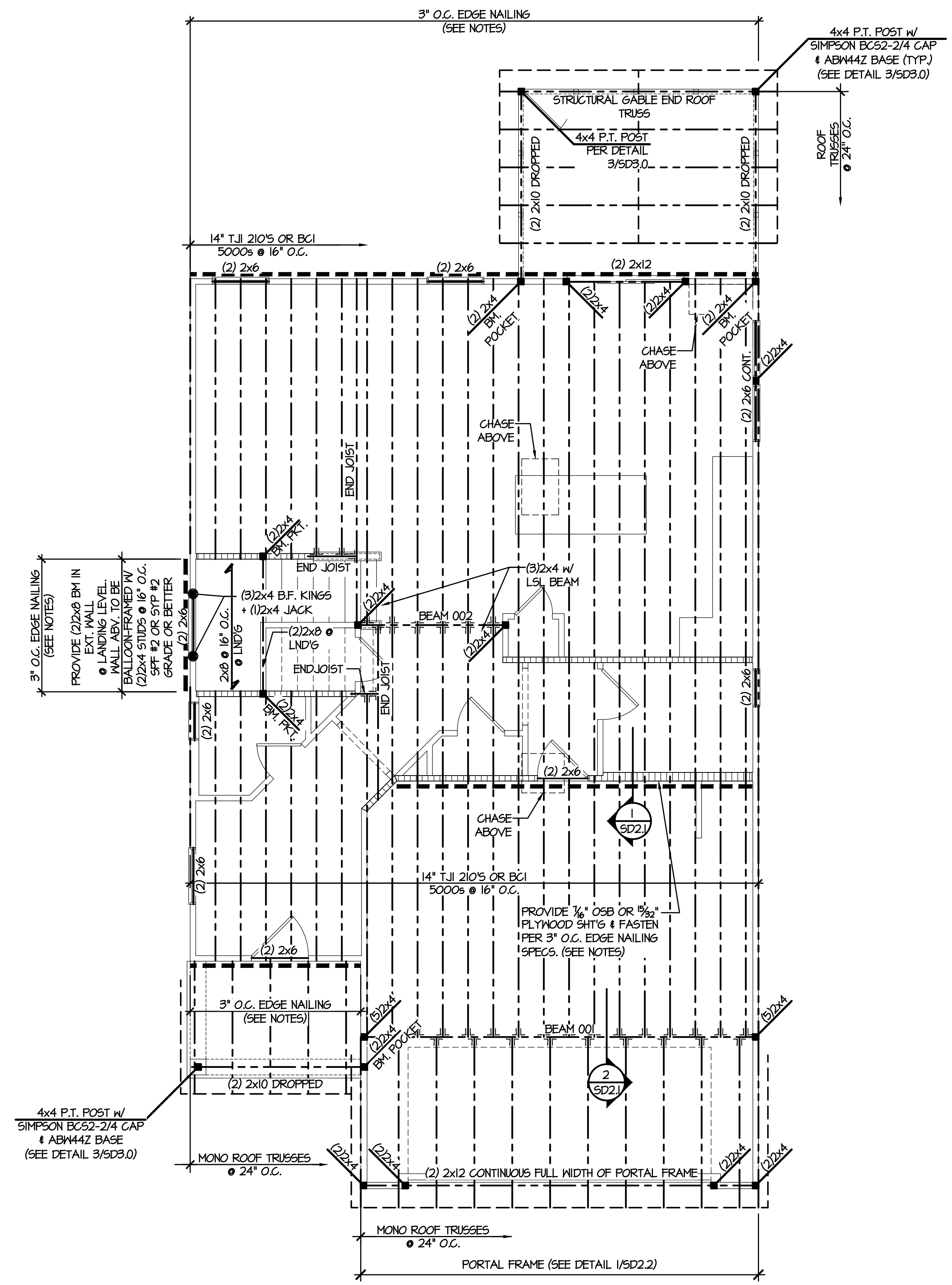

1 2ND FLOOR FRAMING PLAN

SCALE: 1/8"=1'-0"

ALTERNATE F.J MANUFACTURERS

- FLOOR JOISTS BY MANUFACTURER'S OTHER THAN THOSE SHOWN ON PLAN SHALL CONFORM TO THE APA PERFORMANCE RELATED I-JOISTS DESIGN AND CONSTRUCTION GUIDE. MINIMUM JOIST PROPERTIES INCLUDING, BUT NOT LIMITED TO, ALLOWABLE SHEAR, ALLOWABLE MOMENT, STRENGTH, AND STIFFNESS, SHALL MEET OR EXCEED THOSE LISTED FOR THE PRI-60 SERIES I-JOISTS. ALL ALLOWABLE HOLES, BEARING STIFFENERS, AND JOIST TO JOIST CONNECTIONS ARE PER THE JOIST MANUFACTURER.

REFER TO S0.0 FOR TYPICAL STRUCTURAL NOTES & SCHEDULES

SD2.1 REFERS TO SD2.1A FOR LVL/PSL/LSL BEAMS OR SD2.1B FOR FLITCH BEAMS OR SD2.1C FOR STEEL BEAMS

LEGEND

- INTERIOR BEARING WALL
- BEARING WALL ABOVE
- BEAM / HEADER
- INDICATES SHEAR WALL & EXTENT
- EXTENT OF OVERFRAMING
- METAL HANGER
- INDICATES POST ABOVE. PROVIDE SOLID BLOCKING UNDER POST OR JAMB ABOVE.
- INDICATES HOLD-DOWN OR STRAP. REFER TO SCHEDULE.

ENGINEERED BEAM MATERIAL SCHEDULE

BEAM NUMBER	LVL OPTION	PSL OPTION	LSL OPTION	FLITCH OPTION	STEEL OPTION
001	(3)1¾"x18" - FT	5¼"x18" - FT	N/A	(4)2x12 + (3) ½"x11¼" STEEL FLITCH PLATES - FB	W12x26 - F
002	(2)1¾"x14" - F	3½"x14" - F	(3)1¾"x14" - F	(2)2x12 + (1) ¼"x11¼" STEEL FLITCH PLATES - FB	W12x14 - F

- BEAM NOTATION:
  - "F" INDICATES FLUSH BEAM
  - "FT" INDICATES FLUSH TOP BEAM
  - "FB" INDICATES FLUSH BOTTOM BEAM
  - "D" INDICATES DROPPED BEAM
  - "H" INDICATES DROPPED OPENING HEADER
- REFER TO DETAIL D/SD2.0 FOR TYPICAL FLITCH BEAM CONNECTIONS
- REFER TO DETAIL E/SD2.0 FOR TYPICAL STEEL BEAM CONNECTIONS
- FOR FLUSH TOP BEAMS PROVIDE 2X STACKED PLATES BENEATH BEAM AS REQ'D. FASTEN PLATES IN SUCCESSION W/ (2) 3"X0.120" NAILS @ 8" O.C.
- FOR FLUSH BOTTOM BEAMS PROVIDE 2x STACKED PLATES ATOP BEAM AS REQ'D. FASTEN PLATES IN SUCCESSION w/ (2) 3"x0.120" NAILS @ 8" O.C.

seal: 7/15/25

NORTH CAROLINA PROFESSIONAL SEAL 036012 ENGINEER JOSEPH T. RICKER

© copyright : MULHERN & KULP Structural Engineering, Inc.

MULHERN+KULP
RESIDENTIAL STRUCTURAL ENGINEERING
300 Brookside Ave, Building 4 ▸ Ambler, PA 19002
p 215-646-8001 ▸ mulhernkulp.com
NC LICENSE #C-3825

M&K project number: 126-22076

project mgr: JTR
drawn by: NLD
issue date: 07-15-25

REVISIONS:
date: initial:

DRB HOMES

FLOOR FRAMING PLANS

FARM AT NEIL'S CREEK
LOT 24 - MALBEC 1
RALEIGH, NC

sheet: S2.0

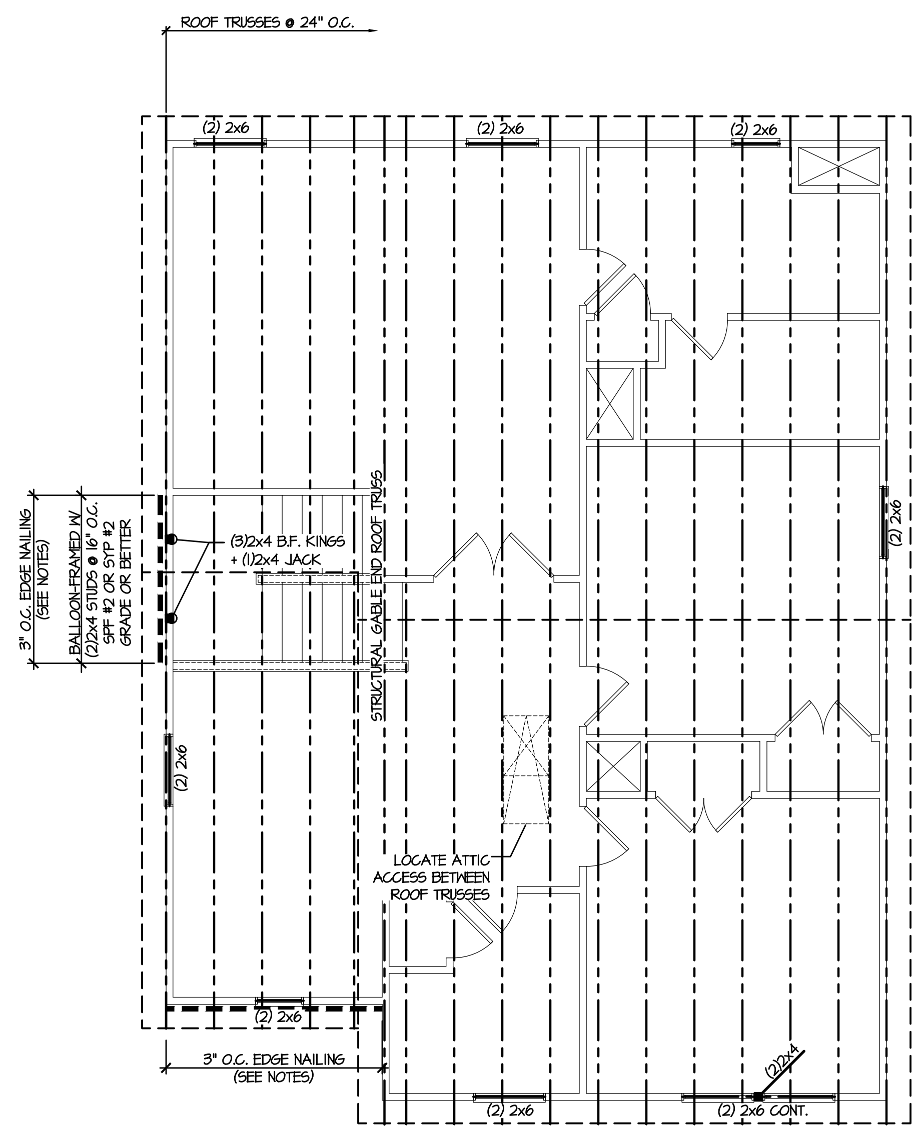

ROOF FRAMING PLAN

SCALE: 1/8"=1'-0"

REFER TO S0.0 FOR TYPICAL STRUCTURAL NOTES & SCHEDULES

LEGEND

- INTERIOR BEARING WALL
- BEARING WALL ABOVE
- BEAM / HEADER
- INDICATES SHEAR WALL & EXTENT
- EXTENT OF OVERFRAMING
- METAL HANGER
- INDICATES POST ABOVE. PROVIDE SOLID BLOCKING UNDER POST OR JAMB ABOVE.
- INDICATES HOLD-DOWN OR STRAP. REFER TO SCHEDULE.

seal: 7/15/25

NORTH CAROLINA PROFESSIONAL ENGINEER SEAL 056012 JOSEPH T. RICKER

© copyright: MULHERN & KULP Structural Engineering, Inc.

MULHERN+KULP
RESIDENTIAL STRUCTURAL ENGINEERING
300 Brookside Ave, Building 4 • Ambler, PA 19002
p 215-646-8001 • mulhernkulp.com
NC LICENSE #C-3825

M&K project number: 126-22076

project mgr: JTR
drawn by: NLD
issue date: 07-15-25

REVISIONS:
date: initial:

DRB HOMES

ROOF FRAMING PLANS

FARM AT NEIL'S CREEK
LOT 24 - MALBEC 1
RALEIGH, NC

sheet: S3.0

FILE: RLH - Neil's Creek - Lot 24 - Structurals DATE: 7/15/2025 1:39 PM

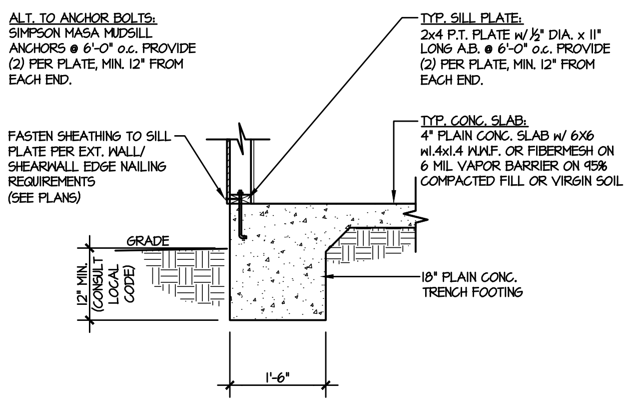

1 TYPICAL SLAB ON GRADE PERIMETER FOOTING
SCALE: 3/8"=1'-0"

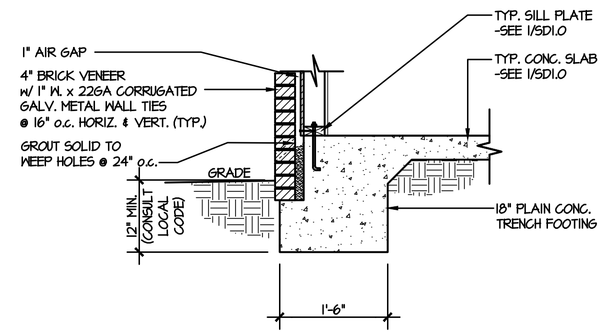

2 TYPICAL SLAB ON GRADE PERIMETER FOOTING
SCALE: 3/8"=1'-0" w/ BRICK VENEER

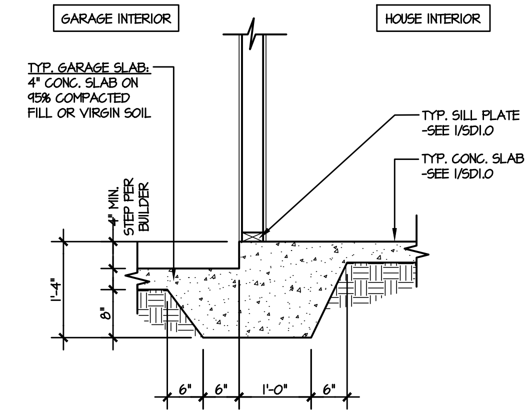

3 TYPICAL MONOLITHIC INTERIOR GARAGE FOOTING
SCALE: 3/8"=1'-0"

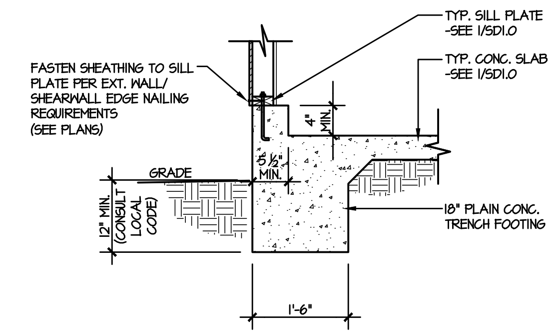

4 TYPICAL SLAB ON GRADE GARAGE PERIMETER FOOTING
SCALE: 3/8"=1'-0"

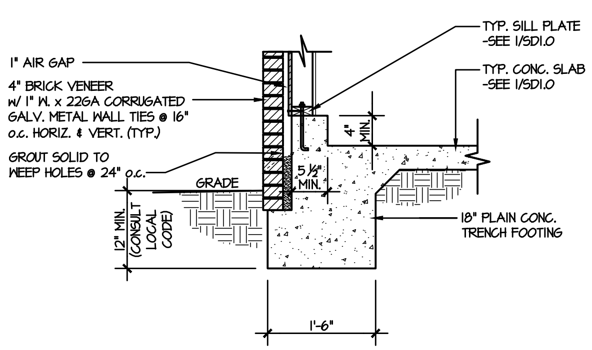

5 TYPICAL SLAB ON GRADE GARAGE PERIMETER FOOTING
SCALE: 3/8"=1'-0" w/ BRICK VENEER

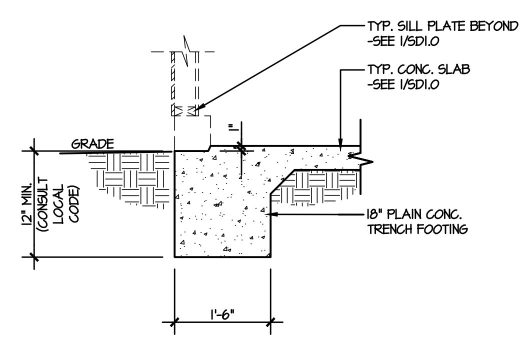

6 TYPICAL SLAB ON GRADE GARAGE ENTRY @ PERIMETER FOOTING
SCALE: 3/8"=1'-0"

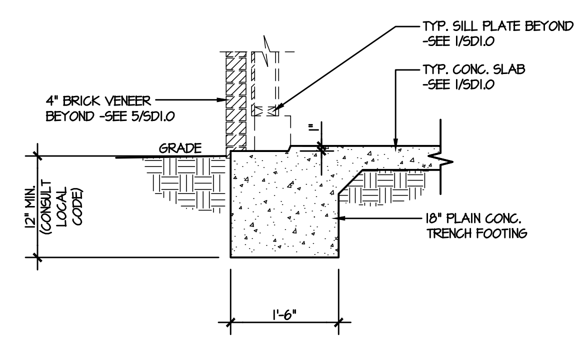

7 TYPICAL SLAB ON GRADE GARAGE ENTRY @ PERIMETER FOOTING
SCALE: 3/8"=1'-0" w/ BRICK VENEER

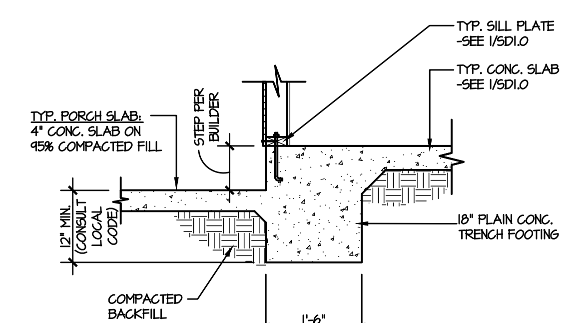

8 TYPICAL SLAB ON GRADE PERIMETER FOOTING @ PORCH/PATIO
SCALE: 3/8"=1'-0"

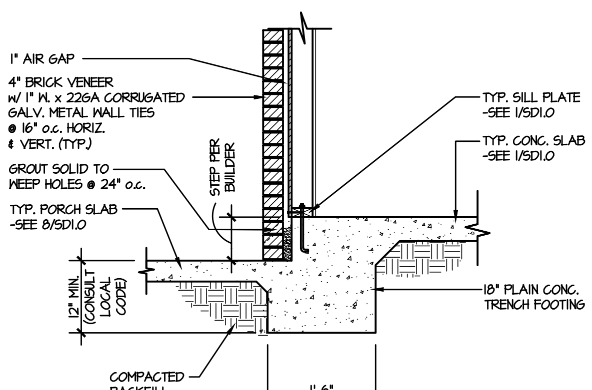

9 TYPICAL SLAB ON GRADE PERIMETER FOOTING @ PORCH/PATIO
SCALE: 3/8"=1'-0" w/ BRICK VENEER

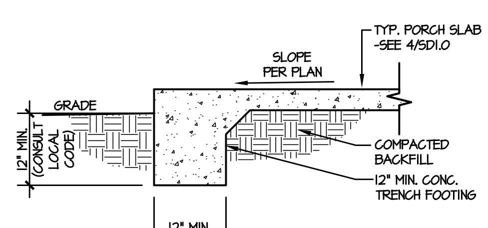

10 TYPICAL FOOTING @ PORCH SLAB
SCALE: 3/8"=1'-0"

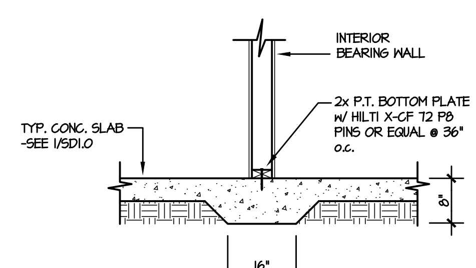

11 TYPICAL THICKENED SLAB @ INTERIOR BEARING WALL
SCALE: 3/8"=1'-0"

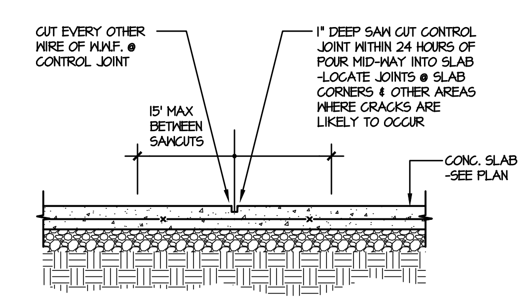

A TYPICAL CONTROL JOINT
SCALE: 3/8"=1'-0"
LOCATE @ 15'-0" o.c. MAX. OR CORNERS WHERE CRACKS LIKELY TO DEVELOP

LETTERED DETAILS ARE TYPICAL FOR THIS HOME & SHALL BE IMPLEMENTED IN ALL APPLICABLE AREAS. THESE DETAILS ARE NOT "CUT" ON THE PLANS.	NUMBERED DETAILS ARE PLAN SPECIFIC AND ARE ONLY REQUIRED WHERE SPECIFICALLY INDICATED ("CUT") ON THE PLANS.

seal: 7/15/25

NORTH CAROLINA PROFESSIONAL SEAL 036012 ENGINEER JOSEPH T. RICKER

© copyright MULHERN & KULP Structural Engineering, Inc.

MULHERN+KULP
RESIDENTIAL STRUCTURAL ENGINEERING
300 Brookside Ave, Building 4 • Ambler, PA 19002
p 215-646-8001 • mulhernkulp.com
NC LICENSE #C-3825

M&K project number: 126-22076

project mgr: JTR
drawn by: NLD
issue date: 07-15-25

REVISIONS:
date: initial:

DRB HOMES

FOUNDATION DETAILS
FARM AT NEIL'S CREEK
LOT 24 - MALBEC 1
RALEIGH, NC

sheet: SD1.0

FILE: RLH - Neil's Creek - Lot 24 - Structurals DATE: 7/15/2025 1:39 PM

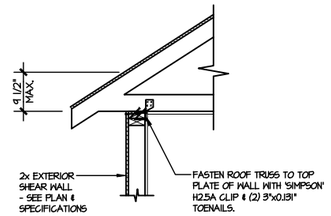

TYPICAL SHEAR TRANSFER DETAIL @ ROOF

A1 SCALE: 3/8"=1'-0"

HEEL HEIGHT LESS THAN 9 ½"
NO BLOCKING REQ'D

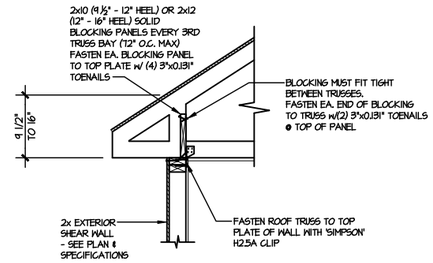

TYPICAL SHEAR TRANSFER DETAIL @ ROOF

A2 SCALE: 3/8"=1'-0"

HEEL HEIGHT BETWEEN 9 ½" - 16" BLOCKING REQ'D

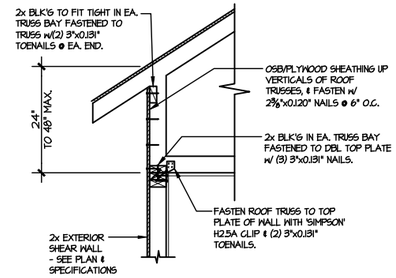

TYPICAL SHEAR TRANSFER DETAIL @ RAISED HEEL TRUSS

A3 SCALE: 3/8"=1'-0"

HEEL HEIGHT UP TO 48" MAX.

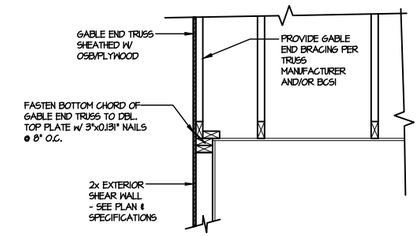

TYPICAL GABLE END DETAIL

B SCALE: 3/8"=1'-0"

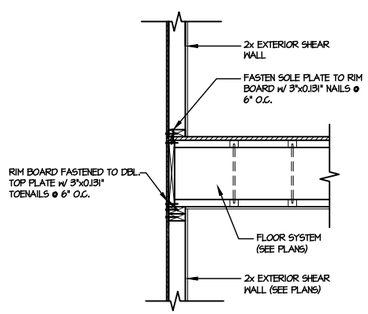

TYPICAL SHEAR TRANSFER DETAIL BETWEEN FLOORS @ EXTERIOR WALL

C SCALE: 3/8"=1'-0"

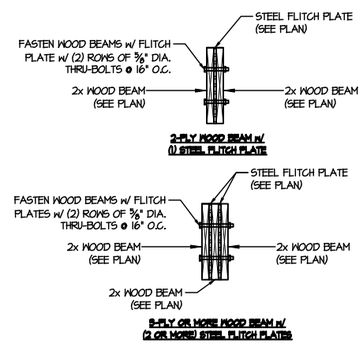

TYPICAL FLITCH BEAM CONNECTION DETAIL

D SCALE: 3/4"=1'-0"

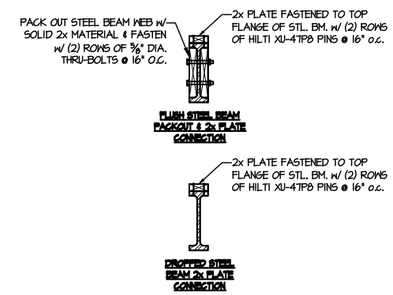

TYPICAL STEEL BEAM CONNECTION DETAIL

E SCALE: 3/4"=1'-0"

LETTERED DETAILS ARE TYPICAL FOR THIS HOME & SHALL BE IMPLEMENTED IN ALL APPLICABLE AREAS. THESE DETAILS ARE NOT "CUT" ON THE PLANS.	NUMBERED DETAILS ARE PLAN SPECIFIC AND ARE ONLY REQUIRED WHERE SPECIFICALLY INDICATED ("CUT") ON THE PLANS.

seal: 7/15/25

NORTH CAROLINA PROFESSIONAL SEAL 036012 ENGINEER JOSEPH T. RICKER

© copyright : MULHERN & KULP Structural Engineering, Inc.

MULHERN+KULP
RESIDENTIAL STRUCTURAL ENGINEERING
5000 Reynolds Ave, Building 4 • Ambler, PA 19002
P: 215-646-8001 • mulhernkulp.com
NC LICENSE #C-3825

M&K project number: 126-22076

project mgr: JTR
drawn by: NLD
issue date: 07-15-25

REVISIONS:
date: initial:

DR HOMES

FRAMING DETAILS

FARM AT NEIL'S CREEK
LOT 24 - MALBEC 1
RALEIGH, NC

sheet: SD2.0

FILE: RLH - Neil's Creek - Lot 24 - Structurals DATE: 7/15/2025 1:39 PM

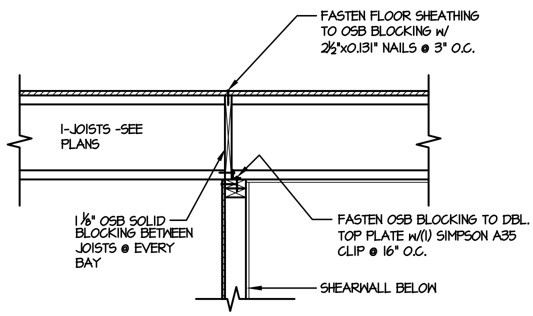

1 SHEAR TRANSFER DETAIL @ INTERIOR SHEARWALL BELOW

SCALE: 3/8"=1'-0" PERPENDICULAR FRAMING

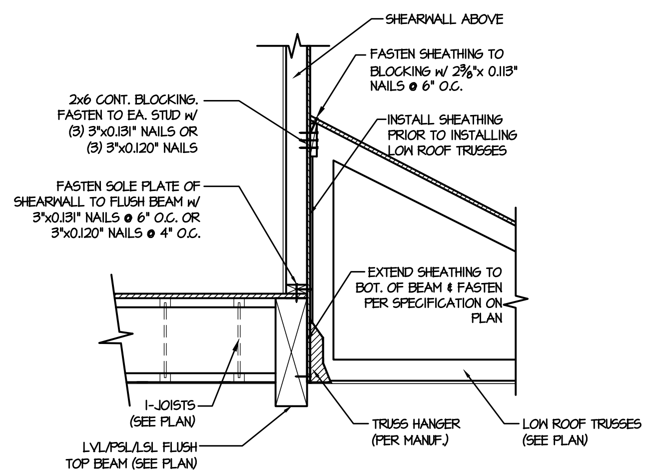

2 SHEAR TRANSFER DETAIL @ EXTERIOR SHEARWALL ABOVE

SCALE: 3/4"=1'-0"

seal: 7/15/25

NORTH CAROLINA PROFESSIONAL SEAL 036012 ENGINEER JOSEPH T. RICKER

© copyright: MULHERN & KULP Residential Structural Engineering, Inc.

MULHERN+KULP
RESIDENTIAL STRUCTURAL ENGINEERING
300 Brookside Ave, Building 4 • Ambler, PA 19002
p 215-646-8001 • mulhernkulp.com
NC LICENSE #C-3825

M&K project number: 126-22076

project mgr: JTR
drawn by: NLD
issue date: 07-15-25

REVISIONS:

date:	initial:

DRB HOMES

FRAMING DETAILS

FARM AT NEIL'S CREEK
LOT 24 - MALBEC 1
RALEIGH, NC

sheet: SD2.1A

FILE: RLH - Neil's Creek - Lot 24 - Structurals DATE: 7/15/2025 1:40 PM

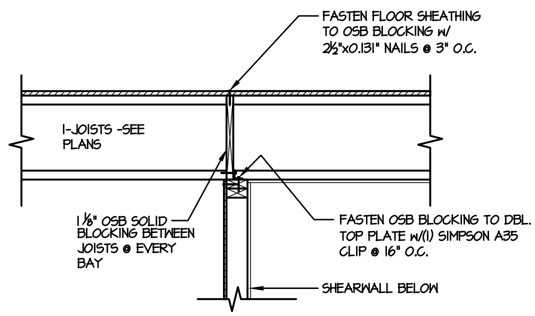

1 **SHEAR TRANSFER DETAIL @ INTERIOR SHEARWALL BELOW**

SCALE: 3/8"=1'-0" PERPENDICULAR FRAMING

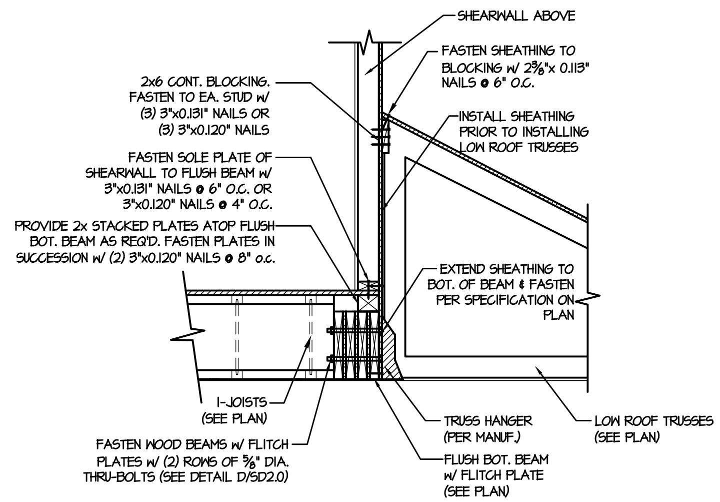

2 **SHEAR TRANSFER DETAIL @ EXTERIOR SHEARWALL ABOVE**

seal: 7/15/25

NORTH CAROLINA PROFESSIONAL SEAL 036012 ENGINEER JOSEPH T. RICKER

© copyright : MULHERN & KULP Structural Engineering, Inc.

MULHERN+KULP
RESIDENTIAL STRUCTURAL ENGINEERING
300 Brookside Ave, Building 4 • Ambler, PA 19002
p 215-646-8001 • mulhernkulp.com
NC LICENSE #C-3825

M&K project number: 126-22076

project mgr: JTR
drawn by: NLD
issue date: 07-15-25

REVISIONS:
date: initial:

DRB HOMES

FRAMING DETAILS
FARM AT NEIL'S CREEK
LOT 24 - MALBEC 1
RALEIGH, NC

sheet: SD2.1B

FILE: RLH - Neil's Creek - Lot 24 - Structurals DATE: 7/15/2025 1:40 PM

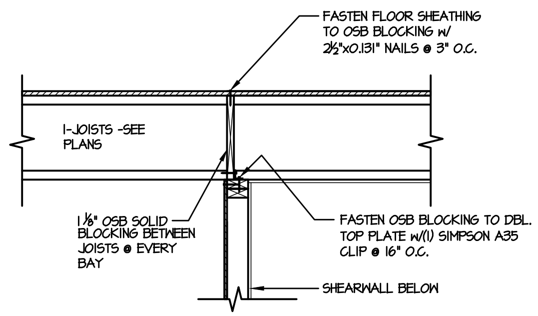

(1) SHEAR TRANSFER DETAIL @ INTERIOR SHEARWALL BELOW

SCALE: 3/8"=1'-0" PERPENDICULAR FRAMING

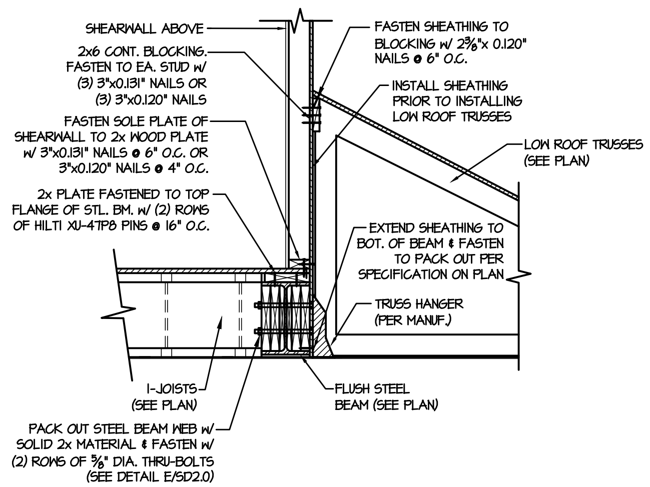

(2) SHEAR TRANSFER DETAIL @ EXTERIOR SHEARWALL ABOVE

SCALE: 3/4"=1'-0"

seal: 7/15/25

NORTH CAROLINA PROFESSIONAL SEAL 036012 ENGINEER JOSEPH T. RICKER

© copyright : MULHERN & KULP Structural Engineering, Inc.

MULHERN+KULP
RESIDENTIAL STRUCTURAL ENGINEERING
300 Brookside Ave, Building 4 ▸ Ambler, PA 19002
p 215-646-8001 ▸ mulhernkulp.com
NC LICENSE #C-3825

M&K project number: 126-22076

project mgr: JTR
drawn by: NLD
issue date: 07-15-25

REVISIONS:

date:	initial:

DRB HOMES

FRAMING DETAILS

FARM AT NEIL'S CREEK

LOT 24 - MALBEC 1

RALEIGH, NC

sheet: SD2.1C

FILE: RLH - Neil's Creek - Lot 24 - Structurals DATE: 7/15/2025 1:40 PM

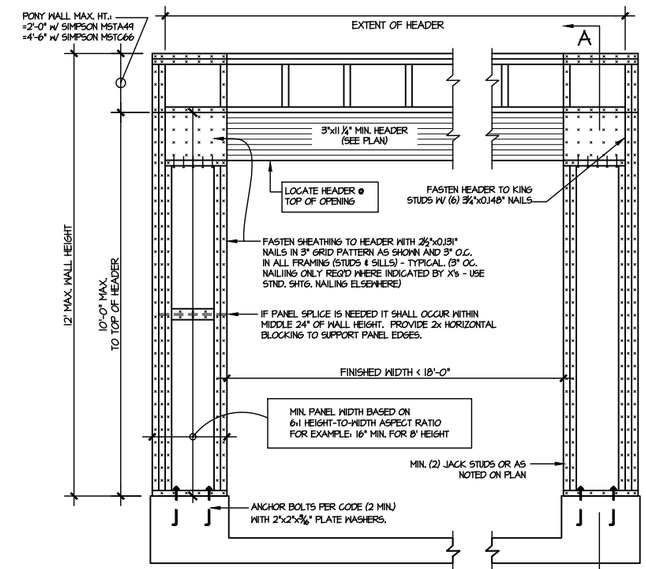

OUTSIDE ELEVATION

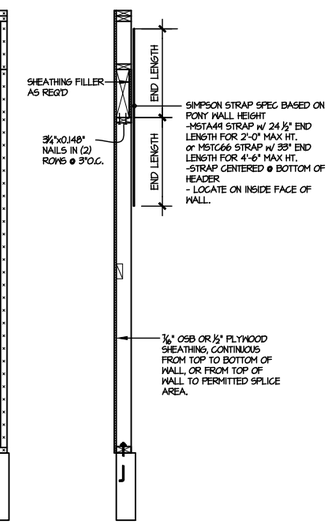

SECTION A-A THROUGH PIER

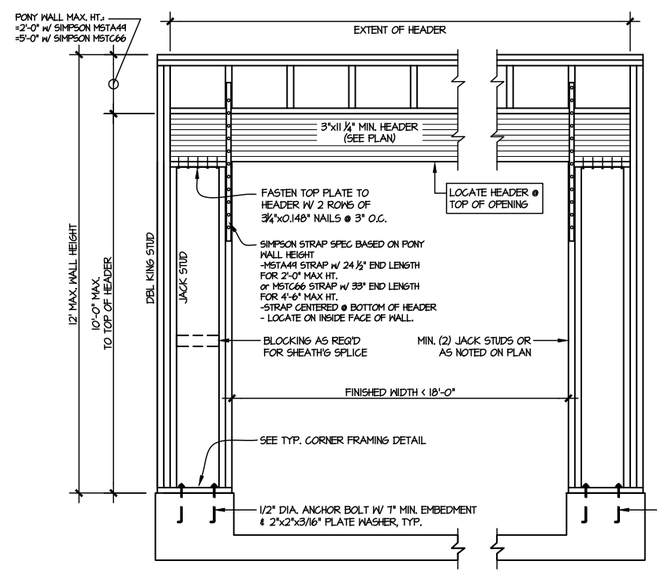

NOTE: ALL SHEATHABLE AREAS OF EXTERIOR WALL SHALL BE FULLY SHEATHED WITH 1/2" PLYWOOD OR 7/16" OSB

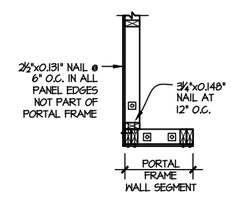

PLAN VIEW OF CORNER DETAIL

ALTERNATIVES TO 1/2" DIA. ANCHOR BOLT:
1) 1/2" DIA. x 6" LONG SIMPSON TITEN HD
2) 1/2" DIA. THREADED ROD EPOXY SET
w/4 1/2" EMBED. (MIN) UTILIZING HILTI HY200
EPOXY ANCHORING SYSTEM (OR EQUAL)

INSIDE ELEVATION

1 TWO SIDED GARAGE PORTAL FRAME BRACING ELEVATION ON CONCRETE STEM

SCALE: N.T.S.

seal: 7/15/25

NORTH CAROLINA PROFESSIONAL SEAL 036012 ENGINEER JOSEPH T. RICKER

© copyright : MULHERN & KULP Structural Engineering, Inc.

MULHERN+KULP
RESIDENTIAL STRUCTURAL ENGINEERING
5000 Reynolds Ave, Building 4 - Ambler, PA 19002
P: 215-646-8001 • mulhernkulp.com

NC LICENSE #C-3825

M&K project number: 126-22076

project mgr: JTR
drawn by: NLD
issue date: 07-15-25

REVISIONS:
date: initial:

DRB HOMES

FRAMING DETAILS

FARM AT NEIL'S CREEK
LOT 24 - MALBEC 1
RALEIGH, NC

sheet: SD2.2

FILE: RLH - Neil's Creek - Lot 24 - Structurals DATE: 7/15/2025 1:40 PM

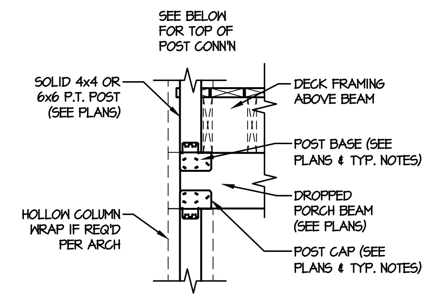

TYPICAL CONNECTION
DETAIL @ 2nd FLOOR DECK

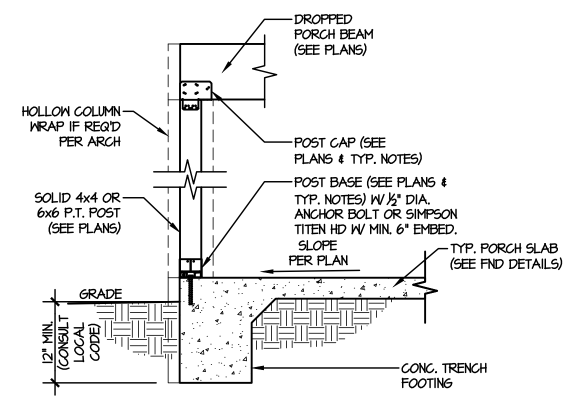

3 TYPICAL PORCH POST CONNECTION DETAIL

SCALE: NONE

SLAB ON GRADE SHOWN
(RAISED SLAB SIM.)

seal: 7/15/25

NORTH CAROLINA PROFESSIONAL ENGINEER SEAL 056012 JOSEPH T. RICKER

© copyright

MULHERN+KULP
RESIDENTIAL STRUCTURAL ENGINEERING
300 Brookside Ave, Building 4 • Ambler, PA 19002
p 215-646-8001 • mulhernkulp.com
NC LICENSE #C-3825

M&K project number: 126-22076

project mgr: JTR
drawn by: NLD
issue date: 07-15-25

REVISIONS:

date:	initial:

DRB HOMES

FRAMING DETAILS

FARM AT NEIL'S CREEK
LOT 24 - MALBEC 1
RALEIGH, NC

sheet: SD3.0

FILE: RLH - Neil's Creek - Lot 24 - Structurals DATE: 7/15/2025 1:40 PM

OPEN WEB FLOOR TRUSS LAYOUT
SCALE: NTS

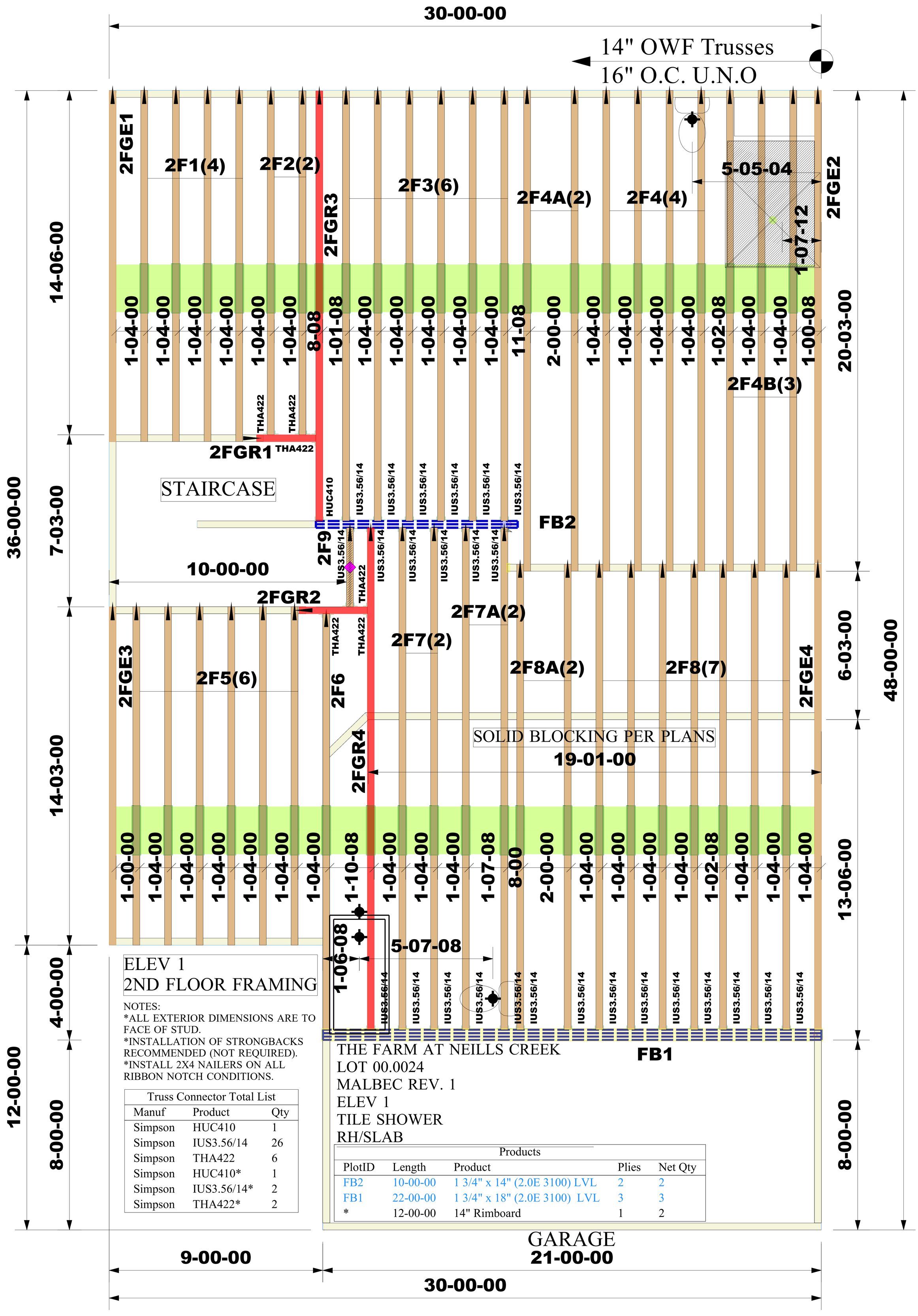

ELEV 1
2ND FLOOR FRAMING

NOTES:
*ALL EXTERIOR DIMENSIONS ARE TO FACE OF STUD.
*INSTALLATION OF STRONGBACKS RECOMMENDED (NOT REQUIRED).
*INSTALL 2X4 NAILERS ON ALL RIBBON NOTCH CONDITIONS.

Truss Connector Total List		
Manuf	Product	Qty
Simpson	HUC410	1
Simpson	IUS3.56/14	26
Simpson	THA422	6
Simpson	HUC410*	1
Simpson	IUS3.56/14*	2
Simpson	THA422*	2

THE FARM AT NEILLS CREEK
LOT 00.0024
MALBEC REV. 1
ELEV 1
TILE SHOWER
RH/SLAB

Products				
PlotID	Length	Product	Plies	Net Qty
FB2	10-00-00	1 3/4" x 14" (2.0E 3100) LVL	2	2
FB1	22-00-00	1 3/4" x 18" (2.0E 3100) LVL	3	3
*	12-00-00	14" Rimboard	1	2

Job #:
2507-1910

Designer:
Rajkumar yadav

Sales Rep:
Robbie Zarobinski

WARNING:
CONVENTIONAL FRAMING, ERECTION AND/OR PERMANENT BRACING IS NOT THE RESPONSIBILITY OF THE TRUSS DESIGNER, PLATE MANUFACTURER, OR THE TRUSS MANUFACTURER. PERSONS ERECTING TRUSSES ARE CAUTIONED TO SEEK PROFESSIONAL ADVICE REGARDING THE ERECTION BRACING WHICH IS ALWAYS REQUIRED TO PREVENT TOPPLING AND DOMINOING DURING ERECTION; AND PERMANENT BRACING WHICH MAY BE REQUIRED IN SPECIFIC APPLICATIONS. SEE "BRACING WOOD TRUSSES COMMENTARY AND RECOMMENDATIONS" (BCSI 1) FOR FURTHER INFORMAITON.

TRUSSES SHALL BE INSTALLED IN A STRAIGHT AND PLUMB POSITION WHERE NO SHEATHING IS APPLIED DIRECTLY TO TOP AND/OR BOTTOM CHORDS, THEY SHALL BE BRACED AS SPCIFIED ON THE ENGINEERED DESIGN. TRUSSES SHALL BE HANDLED WITH REASONABLE CARE DURING ERECTION TO PREVENT DAMAGE OR PERSONAL INJURY.

NOTE:
IT IS THE RESPONSIBILITY OF THE BUILDING DESIGNER OR ARCHITECT TO PROVIDE AN APPROPRIATE CONNECTION FOR TRUSSES TO SUPPORTING STRUCTURE PER REACTIONS SHOWN ON TRUSS ENGINEERING. SPECIAL CONSIDERATIONS FOR MECHANICAL EQUIPMENT AND/OR PLUMBING (AND THEIR CONNECTIONS) IN TRUSS SPACE MUST BE DIAGRAMMED BY BUILDER ON APPROVED TRUSS LAYOUT PRIOR TO FABRICATION.

THIS COMPANY IS A TRUSS MANUFACTURER WHOSE RESPONSIBILITIES ARE LIMITED TO THOSE DESCRIBED IN WTCA 1-1995 "DESIGN RESPONSIBILITIES". ACCORDINGLY, IT DISCLAIMS ANY RESPONSIBILITIES AND/OR LIABILITY FOR THE CONSTRUCTIION DESIGN, DRAWINGS, DOCUMENTS INCLUDING THE INSTALLATION, AND BRACING OF TRUSSES MANUFACTURED BY THIS COMPANY.

Customer: DRB Raleigh
Job Name: The Farm at Neills Creek Lot 00.0024 OWF
Lot #: 00.0024
Model Name: Malbec

Third-Party Quality Assurance Licensee
TPI Plant W974

Structural, LLC
201 Poplar Avenue
Thurmont, MD 21788
Phone: 301-271-7591

ROOF TRUSS LAYOUT
SCALE: NTS

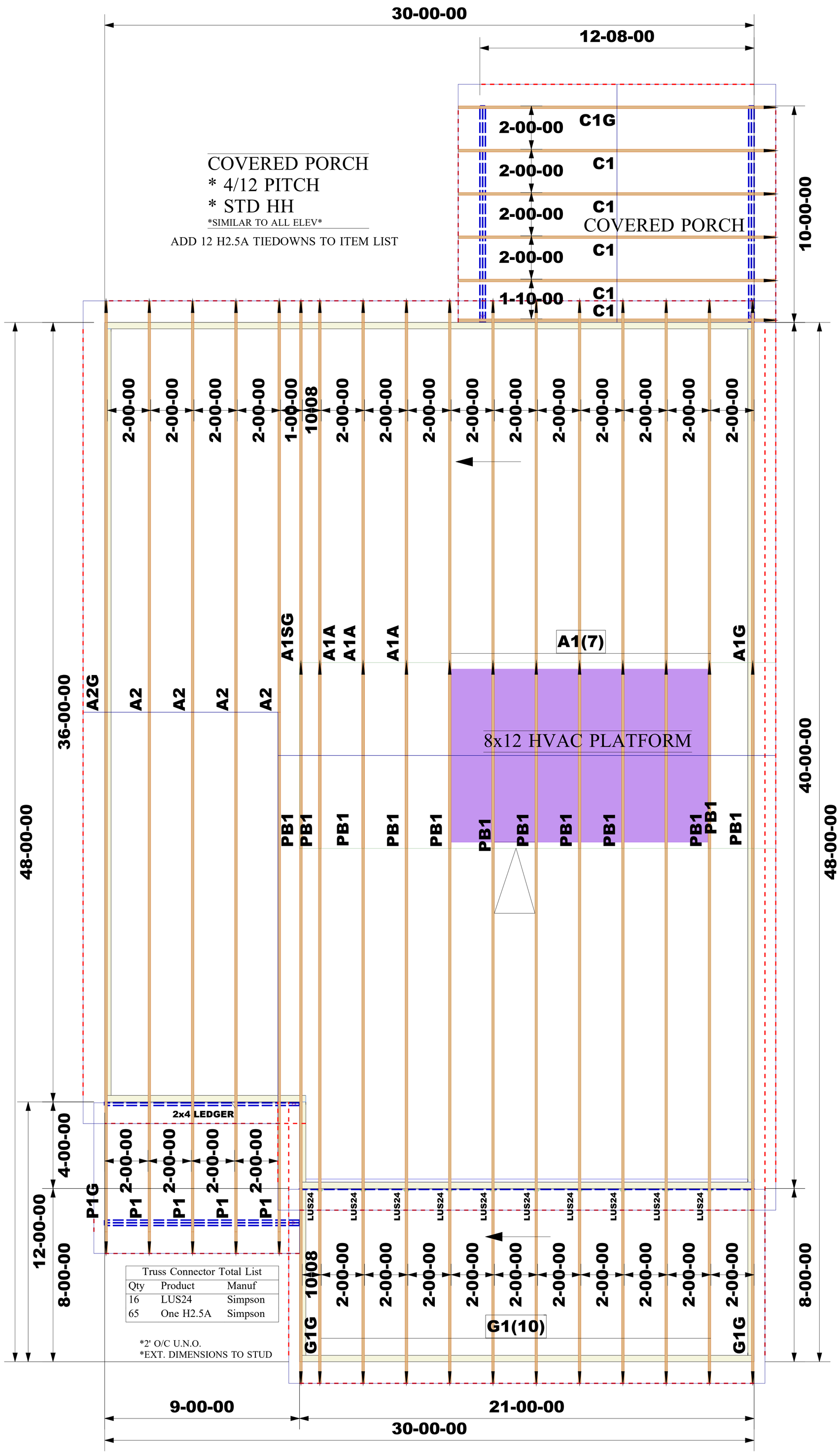

Truss Connector Total List		
Qty	Product	Manuf
16	LUS24	Simpson
65	One H2.5A	Simpson

*2' O/C U.N.O.
*EXT. DIMENSIONS TO STUD

The Farm at Neill's Creek (NC)(RAL)
Lot 00.0024 Phase
Model 1930-1 - Malbec
Garage Right
OPT Screen Porch
OPT Covered Porch
Elevation 1

Job #:
2507-1913

Designer:
Abhijit Bera

Sales Rep:
Robbie Zarobinski

WARNING:

CONVENTIONAL FRAMING, ERECTION AND/OR PERMANENT BRACING IS NOT THE RESPONSIBILITY OF THE TRUSS DESIGNER, PLATE MANUFACTURER, OR THE TRUSS MANUFACTURER. PERSONS ERECTING TRUSSES ARE CAUTIONED TO SEEK PROFESSIONAL ADVICE REGARDING THE ERECTION BRACING WHICH IS ALWAYS REQUIRED TO PREVENT TOPPLING AND DOMINOING DURING ERECTION; AND PERMANENT BRACING WHICH MAY BE REQUIRED IN SPECIFIC APPLICATIONS. SEE "BRACING WOOD TRUSSES COMMENTARY AND RECOMMENDATIONS" (BCSI 1) FOR FURTHER INFORMAITON.

TRUSSES SHALL BE INSTALLED IN A STRAIGHT AND PLUMB POSITION WHERE NO SHEATHING IS APPLIED DIRECTLY TO TOP AND/OR BOTTOM CHORDS, THEY SHALL BE BRACED AS SPCIFIED ON THE ENGINEERED DESIGN. TRUSSES SHALL BE HANDLED WITH REASONABLE CARE DURING ERECTION TO PREVENT DAMAGE OR PERSONAL INJURY.

NOTE:

IT IS THE RESPONSIBILITY OF THE BUILDING DESIGNER OR ARCHITECT TO PROVIDE AN APPROPRIATE CONNECTION FOR TRUSSES TO SUPPORTING STRUCTURE PER REACTIONS SHOWN ON TRUSS ENGINEERING. SPECIAL CONSIDERATIONS FOR MECHANICAL EQUIPMENT AND/OR PLUMBING (AND THEIR CONNECTIONS) IN TRUSS SPACE MUST BE DIAGRAMMED BY BUILDER ON APPROVED TRUSS LAYOUT PRIOR TO FABRICATION.

THIS COMPANY IS A TRUSS MANUFACTURER WHOSE RESPONSIBILITIES ARE LIMITED TO THOSE DESCRIBED IN WTCA 1-1995 "DESIGN RESPONSIBILITIES". ACCORDINGLY, IT DISCLAIMS ANY RESPONSIBILITIES AND/OR LIABILITY FOR THE CONSTRUCTIION DESIGN, DRAWINGS, DOCUMENTS INCLUDING THE INSTALLATION, AND BRACING OF TRUSSES MANUFACTURED BY THIS COMPANY.

Customer: DRB Raleigh
Job Name: The Farm at Neills Creek Lot 00.0024 ROOF
Lot #: 00.0024
Model Name: Malbec

Third-Party Quality Assurance Licensee
TPI Plant W974

Structural, LLC
201 Poplar Avenue
Thurmont, MD 21788
Phone: 301-271-7591