Carter Sanford Component Plant
298 Harvey Faulk Rd
Sanford, NC 27332

Phone #:919-775-1450

Builder: DR Horton Inc

Model: 12 Mason Ridge - Wilmington - B

THE PLACEMENT PLAN NOTES:

1. The Placement Plan is a diagram for truss installation. It is not an engineered drawing and has not been reviewed by an engineer. The Owner/Building Designer is responsible for obtaining an engineer's review if one is required by the local jurisdiction.
2. The responsibilities of the Owner, Contractor, Building Designer, Component Designer and Component Manufacturer shall be as set forth in ANSI/TPI 1. Capitalized terms shall be as defined in ANSI/TP 1 unless otherwise indicated.
3. Each Component is designed as an individual component utilizing information provided by others. The Owner/Building Designer is responsible for reviewing all Component Submittal Packages and individual Component Design Drawings for compliance with the Construction Documents and compatibility with the overall Building design.
4. Contractor will not proceed with component installation until the Owner/Building Designer has reviewed the Component Submittal Package. Questions on the suitability of any Component will be resolved by the Building Designer.
5. The Building Designer and Contractor are responsible for all temporary and permanent bracing.
6. The Placement Plan assumes the building is dimensionally correct, structurally sound, and in a suitable condition to support each Component during installation and thereafter, including but not limited to installation of all bearing points. Proper design and construction of all structural components, including foundations, headers, beams, walls and columns are the responsibility of the Owner, Building Designer and Contractor.
7. Do not cut, drill, or modify any Component without first consulting the Component Manufacturer or Building Designer. Damaged Components shall not be installed unless directed by the Building Designer or approved by the Component Manufacturer.
8. Components must be handled and installed following all applicable safety standards and best practices, including but not limited to BCSI, OSHA, TPI and local codes. Failure to properly handle, brace or otherwise install Component can result in serious injury or death.
9. All uplift connectors shown within these documents are recommendations only. Per ANSI/TPI 1, all uplift connectors are the responsibility of the building designer and or contractor.

Approved By: _____ **Date:** _____

General Notes: ** CUTTING OR DRILLING OF COMPONENTS SHOULD NOT BE DONE WITHOUT CONTACTING COMPONENT SUPPLIER FIRST. CUSTOMER TAKES FULL RESPONSIBILITY FOR COMPONENTS IF CUT BEFORE AUTHORIZATION. ** ALL BEARING POINTS MUST BE INSTALLED PRIOR TO SETTING ANY COMPONENTS.

** TRUSS TO TRUSS CONNECTIONS ARE TOE-NAILED, UNLESS NOTED OTHERWISE.

** DAMAGED COMPONENTS SHOULD NOT BE INSTALLED UNLESS TOLD TO BY THE COMPONENT PLANT.

** FRAMER MUST REFER TO PLANS WHILE SETTING COMPONENTS.

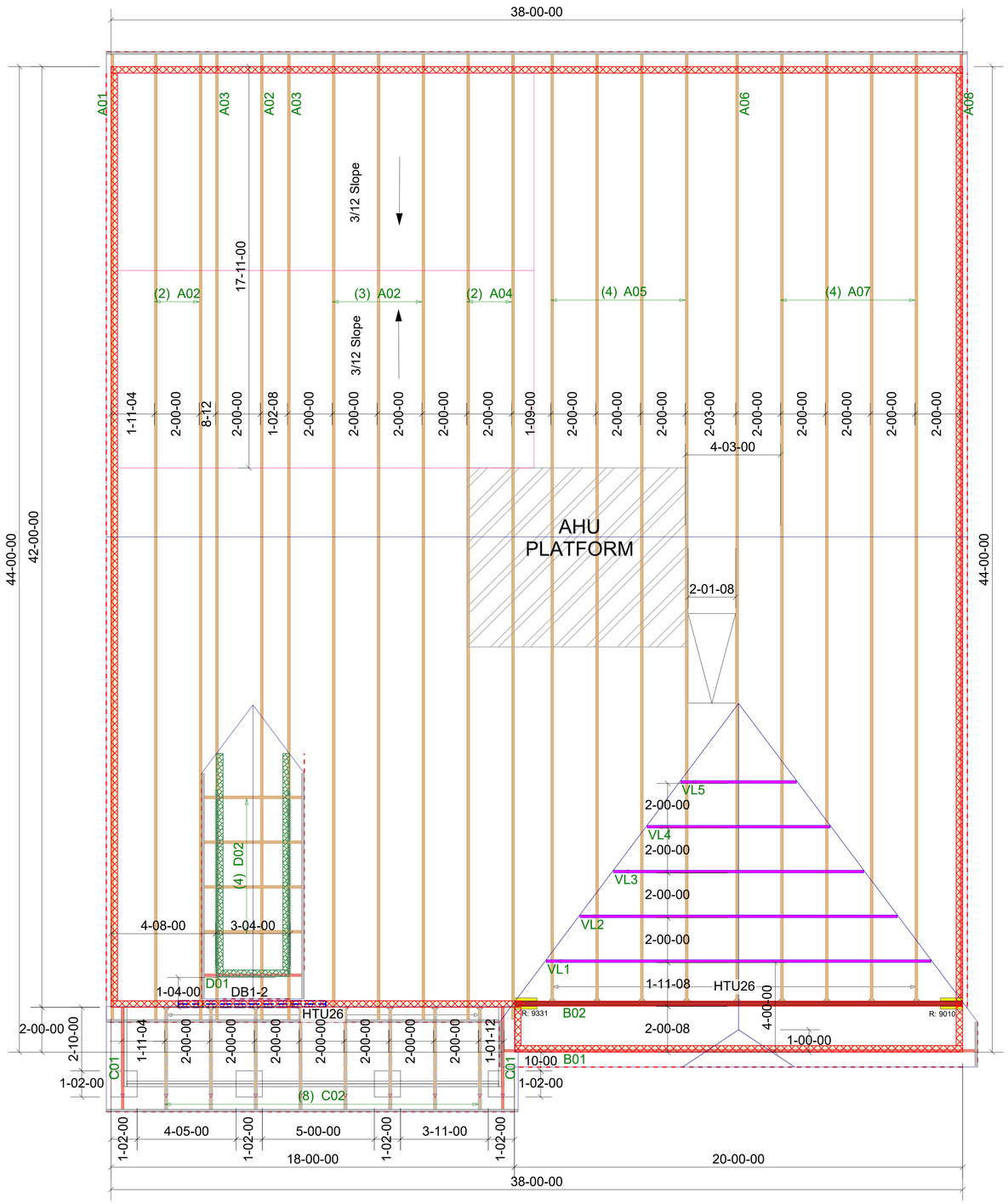

Truss Connector Total List		
Manuf	Product	Qty
Simpson	HTU26	17
Simpson	One H2.5A	70

Products					
PlotID	Length	Product	Plies	Net Qty	Fab Type
DB1-2	8-00-00	2.0 RigidLam DF LVL 1-3/4 x 9-1/4	2	2	FF

Hatch Legend

- 13' 9-1/8" Dormer Bearing
- 8' 1-1/8" BRG HGT
- AHU PLATFORM
- 9' 1-1/8" BRG HGT

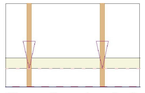

Truss Drawing Left End Indicator

ROOF PLACEMENT PLAN

** All uplift connectors shown within these documents are recommendations only. Per ANSI/TPI 1, all uplift connectors are the responsibilty of the bldg designer and or contractor.

** DIMENSIONS ARE READ AS: FOOT-INCH-SIXTEENTH.

** GIRDERS MUST BE FULLY CONNECTED TOGETHER PRIOR TO ADDING ANY LOADS.

Revisions	
00/00/00	Name
00/00/00	Name
00/00/00	Name
00/00/00	Name
00/00/00	Name

THIS IS A TRUSS PLACEMENT DIAGRAM ONLY. These trusses are designed as individual components to be incorporated into the building design at the specification of the building designer. See individual design sheets for each truss design identified on the placement drawing. The building designer is responsible for temporary and permanent bracing of the roof and floor systems and for the overall structure. The design of the truss support structure including headers, beams and walls, and columns is the responsibility of the building designer. For general guidance regarding the bracing, consult "Bracing of Wood Trusses" available from the Truss Plate Institute, 583 D'Onofrio Drive: Madison, WI 53179

CARTER Lumber

DR Horton Inc

12 Mason Ridge - Wilmington - B

Roof Truss Layout

Scale: NTS

Date: 7/9/2025

Designer: Nate Donaldson

Project Number: 25070038-C

Sheet Number: 1/1

** TRIANGULAR SYMBOL NEAR END OF TRUSS INDICATES LEFT END OF TRUSS AS SHOWN ON INDIVIDUAL TRUSS DRAWINGS. ** PLUMBING DROPS NOTED ARE IN THE APPROXIMATE LOCATIONS PER PLAN. BUILDER TO VERIFY LOCATIONS BEFORE SETTING TRUSSES. ** REFER TO FINAL TRUSS ENGINEERING SHEETS FOR PLY TO PLY CONNECTIONS.

ENGINEERING BY TRENCO
A MiTek Affiliate

RE: 25070038
12 Mason Ridge - Wilmington B - Roof

Trenco
818 Soundside Rd
Edenton, NC 27932

Site Information:

Customer: DR Horton Inc Project Name: 25070038
Lot/Block: 12 Model: Wilmington B
Address: Subdivision: Mason Ridge
City: State:

General Truss Engineering Criteria & Design Loads (Individual Truss Design Drawings Show Special Loading Conditions):

Design Code: IRC2018/TPI2014 Design Program: MiTek 20/20 8.7
Wind Code: ASCE 7-16 Wind Speed: 130 mph
Roof Load: 40.0 psf Floor Load: N/A psf

This package includes 19 individual, dated Truss Design Drawings and 0 Additional Drawings.

No.	Seal#	Truss Name	Date
1	I69852575	A01	11/27/2024
2	I69852576	A02	11/27/2024
3	I69852577	A03	11/27/2024
4	I69852578	A04	11/27/2024
5	I69852579	A05	11/27/2024
6	I69852580	A06	11/27/2024
7	I69852581	A07	11/27/2024
8	I69852582	A08	11/27/2024
9	I69852583	B01	11/27/2024
10	I69852584	B02	11/27/2024
11	I69852585	C01	11/27/2024
12	I69852586	C02	11/27/2024
13	I69852587	D01	11/27/2024
14	I69852588	D02	11/27/2024
15	I69852589	VL1	11/27/2024
16	I69852590	VL2	11/27/2024
17	I69852591	VL3	11/27/2024
18	I69852592	VL4	11/27/2024
19	I69852593	VL5	11/27/2024

The truss drawing(s) referenced above have been prepared by
Truss Engineering Co. under my direct supervision
based on the parameters provided by Carter Components (Sanford, NC)).

Truss Design Engineer's Name: Gilbert, Eric

My license renewal date for the state of North Carolina is December 31, 2025.

North Carolina COA: C-0844

IMPORTANT NOTE: The seal on these truss component designs is a certification that the engineer named is licensed in the jurisdiction(s) identified and that the designs comply with ANSI/TPI 1. These designs are based upon parameters shown (e.g., loads, supports, dimensions, shapes and design codes), which were given to TRENCO. Any project specific information included is for TRENCO customers file reference purpose only, and was not taken into account in the preparation of these designs. TRENCO has not independently verified the applicability of the design parameters or the designs for any particular building. Before use, the building designer should verify applicability of design parameters and properly incorporate these designs into the overall building design per ANSI/TPI 1, Chapter 2.

NORTH CAROLINA PROFESSIONAL SEAL 036322 ENGINEER ERIC A. GILBERT

November 27, 2024

Gilbert, Eric

Job	Truss	Truss Type	Qty	Ply	12 Mason Ridge - Wilmington B - Roof
25070038	A01	Roof Special	1	1	I69852575 Job Reference (optional)

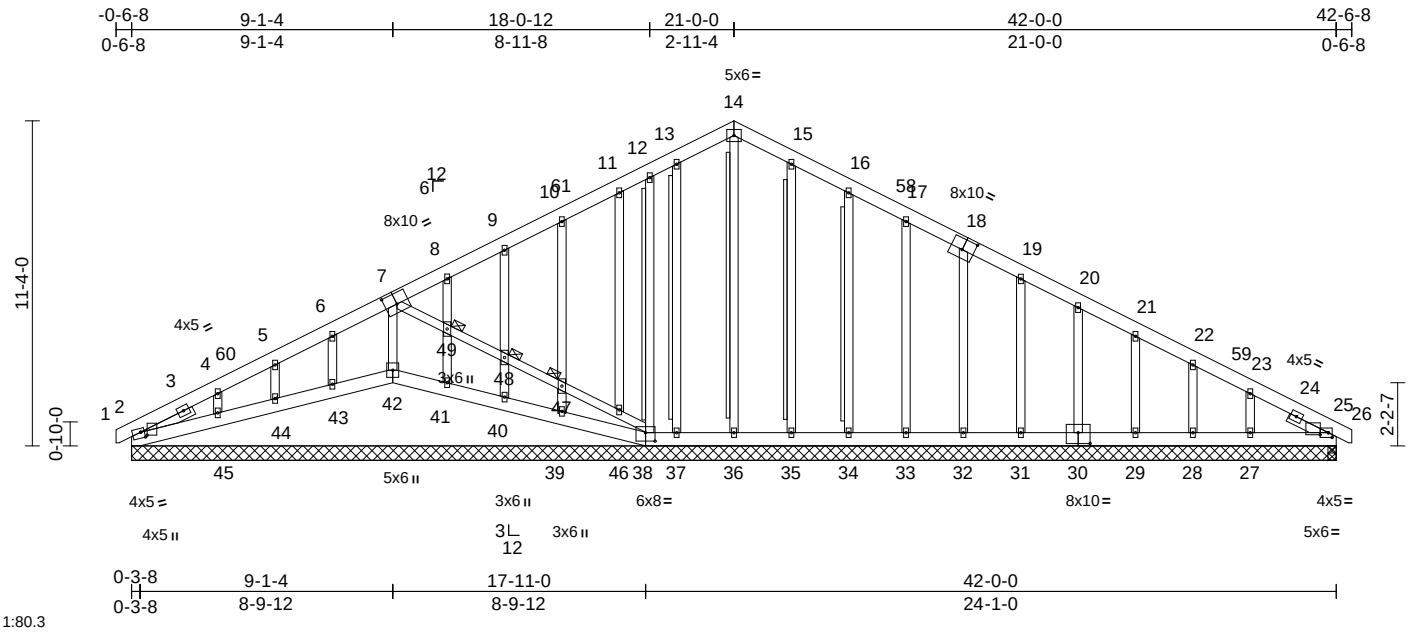

Scale = 1:80.3

Plate Offsets (X, Y): [2:0-1-4,0-2-12], [2:0-1-8,0-2-7], [7:0-5-0,0-4-8], [18:0-5-0,0-4-8], [25:0-1-9,0-2-0], [25:0-3-7,0-0-13], [30:0-5-0,0-4-8], [38:0-4-0,0-3-8]

Loading	(psf)	Spacing	2-0-0	CSI		DEFL	in	(loc)	l/defl	L/d	PLATES	GRIP
TCLL (roof)	20.0	Plate Grip DOL	1.15	TC	0.05	Vert(LL)	0.00	27-56	>999	240	MT20	244/190
Snow (Pf)	20.0	Lumber DOL	1.15	BC	0.04	Vert(CT)	0.00	52	>999	180		
TCDL	10.0	Rep Stress Incr	YES	WB	0.17	Horz(CT)	0.01	25	n/a	n/a		
BCLL	0.0*	Code	IRC2018/TPI2014	Matrix-MSH								
BCDL	10.0										Weight: 392 lb	FT = 20%

LUMBER

TOP CHORD 2x6 SP No.2
BOT CHORD 2x6 SP No.2
WEBS 2x4 SP No.3
OTHERS 2x4 SP No.3 *Except*
36-14,0-0,0-0,0-0,0-0,0-0:2x4 SP No.2
SLIDER Left 2x4 SP No.3 -- 2-0-0, Right 2x4 SP No.3 -- 1-6-0

BRACING

TOP CHORD Structural wood sheathing directly applied or 6-0-0 oc purlins.
BOT CHORD Rigid ceiling directly applied or 10-0-0 oc bracing.
WEBS T-Brace: 2x4 SP No.2 - 12-38, 14-36, 13-37, 15-35, 16-34
Fasten (2X) T and I braces to narrow edge of web with 10d (0.131"x3") nails, 6in o.c.,with 3in minimum end distance.
Brace must cover 90% of web length.
JOINTS 1 Brace at Jt(s): 47, 48, 49

REACTIONS (size) 2=42-0-0, 25=42-0-0, 27=42-0-0, 28=42-0-0, 29=42-0-0, 30=42-0-0, 31=42-0-0, 32=42-0-0, 33=42-0-0, 34=42-0-0, 35=42-0-0, 36=42-0-0, 37=42-0-0, 38=42-0-0, 39=42-0-0, 40=42-0-0, 41=42-0-0, 42=42-0-0, 43=42-0-0, 44=42-0-0, 45=42-0-0, 50=42-0-0, 54=42-0-0
Max Horiz 2=171 (LC 14), 50=171 (LC 14)
Max Uplift 2=-68 (LC 15), 27=-103 (LC 15), 28=-25 (LC 15), 29=-48 (LC 15), 30=-43 (LC 15), 31=-42 (LC 15), 32=-44 (LC 15), 33=-45 (LC 15), 34=-53 (LC 15), 35=-16 (LC 15), 37=-12 (LC 14), 38=-98 (LC 14), 39=-46 (LC 14), 40=-48 (LC 14), 41=-38 (LC 14), 43=-43 (LC 14), 44=-29 (LC 14), 45=-99 (LC 14), 50=-68 (LC 15)
Max Grav 2=155 (LC 26), 25=152 (LC 22), 27=223 (LC 35), 28=140 (LC 22), 29=164 (LC 35), 30=159 (LC 22), 31=158 (LC 35), 32=160 (LC 1), 33=188 (LC 22), 34=237 (LC 22), 35=237 (LC 22), 36=186 (LC 31), 37=167 (LC 21), 38=253 (LC 21), 39=267 (LC 21), 40=147 (LC 34), 41=157 (LC 1), 42=169 (LC 27), 43=174 (LC 1), 44=135 (LC 21), 45=233 (LC 34), 50=155 (LC 26), 54=152 (LC 22)

FORCES (lb) - Maximum Compression/Maximum Tension
TOP CHORD 14-15=-114/224, 15-16=-102/195, 16-17=-82/150, 17-19=-63/110, 19-20=-51/48, 20-21=-51/25, 21-22=-71/20, 22-23=-102/35, 23-25=-157/66, 25-26=0/17, 1-2=0/13, 2-4=-145/99, 4-5=-123/107, 5-6=-99/131, 6-8=-87/154, 8-9=-67/147, 9-10=-62/171, 10-11=-85/194, 11-12=-86/211, 12-13=-105/226, 13-14=-113/232
BOT CHORD 2-45=-26/131, 44-45=-28/131, 43-44=-28/131, 42-43=-29/130, 41-42=-28/130, 40-41=-27/131, 39-40=-29/130, 38-39=-29/133, 37-38=-56/171, 36-37=-56/171, 35-36=-56/171, 34-35=-56/171, 33-34=-56/171, 32-33=-56/171, 31-32=-55/171, 29-31=-55/171, 28-29=-55/171, 27-28=-55/171, 25-27=-55/171
WEBS 7-49=-47/87, 48-49=-45/84, 47-48=-46/84, 46-47=-43/83, 38-46=-62/106, 12-38=-168/52, 14-36=-144/28, 13-37=-140/28, 11-46=-56/40, 10-47=-188/76, 39-47=-211/79, 9-48=-118/69, 40-48=-113/68, 8-49=-111/57, 41-49=-114/63, 6-43=-126/67, 5-44=-111/63, 4-45=-148/90, 15-35=-198/51, 16-34=-197/77, 17-33=-148/69, 18-32=-120/68, 19-31=-118/66, 20-30=-120/68, 21-29=-121/69, 22-28=-112/59, 23-27=-149/101, 7-42=-101/0

November 27,2024

Continued on page 2

WARNING - Verify design parameters and READ NOTES ON THIS AND INCLUDED MITEK REFERENCE PAGE MII-7473 rev. 1/2/2023 BEFORE USE.
Design valid for use only with MiTek® connectors. This design is based only upon parameters shown, and is for an individual building component, not a truss system. Before use, the building designer must verify the applicability of design parameters and properly incorporate this design into the overall building design. Bracing indicated is to prevent buckling of individual truss web and/or chord members only. Additional temporary and permanent bracing is always required for stability and to prevent collapse with possible personal injury and property damage. For general guidance regarding the fabrication, storage, delivery, erection and bracing of trusses and truss systems, see **ANSI/TPI1 Quality Criteria and DSB-22** available from Truss Plate Institute (www.tpinst.org) and **BCSI Building Component Safety Information** available from the Structural Building Component Association (www.sbcacomponents.com)

ENGINEERING BY TRENCO A MiTek Affiliate
818 Soundside Road
Edenton, NC 27932

NOTES

1) Unbalanced roof live loads have been considered for this design.
2) Wind: ASCE 7-16; Vult=130mph (3-second gust) Vasd=103mph; TCDL=6.0psf; BCDL=6.0psf; h=25ft; Cat. II; Exp B; Enclosed; MWFRS (envelope) exterior zone and C-C Exterior(2E) -0-5-14 to 3-8-7, Interior (1) 3-8-7 to 16-9-11, Exterior(2R) 16-9-11 to 25-0-0, Interior (1) 25-0-0 to 38-3-9, Exterior(2E) 38-3-9 to 42-5-14 zone; cantilever left and right exposed ; end vertical left and right exposed;C-C for members and forces & MWFRS for reactions shown; Lumber DOL=1.60 plate grip DOL=1.60
3) Truss designed for wind loads in the plane of the truss only. For studs exposed to wind (normal to the face), see Standard Industry Gable End Details as applicable, or consult qualified building designer as per ANSI/TPI 1.
4) TCLL: ASCE 7-16; Pr=20.0 psf (roof LL: Lum DOL=1.15 Plate DOL=1.15); Pf=20.0 psf (Lum DOL=1.15 Plate DOL=1.15); Is=1.0; Rough Cat B; Fully Exp.; Ce=0.9; Cs=1.00; Ct=1.10
5) Unbalanced snow loads have been considered for this design.
6) This truss has been designed for greater of min roof live load of 12.0 psf or 1.00 times flat roof load of 20.0 psf on overhangs non-concurrent with other live loads.
7) All plates are 2x4 MT20 unless otherwise indicated.
8) Gable studs spaced at 2-0-0 oc.
9) This truss has been designed for a 10.0 psf bottom chord live load nonconcurrent with any other live loads.
10) * This truss has been designed for a live load of 20.0psf on the bottom chord in all areas where a rectangle 3-06-00 tall by 2-00-00 wide will fit between the bottom chord and any other members.
11) One H2.5A Simpson Strong-Tie connectors recommended to connect truss to bearing walls due to UPLIFT at jt(s) 2, 37, 35, 34, 33, 32, 31, 30, 29, 28, and 27. This connection is for uplift only and does not consider lateral forces.
12) One RT8A MiTek connectors recommended to connect truss to bearing walls due to UPLIFT at jt(s) 38. This connection is for uplift only and does not consider lateral forces.
13) One RT8A MiTek connectors recommended to connect truss to bearing walls due to UPLIFT at jt(s) 39, 40, 41, 43, 44, and 45. This connection is for uplift only and does not consider lateral forces.
14) This truss is designed in accordance with the 2018 International Residential Code sections R502.11.1 and R802.10.2 and referenced standard ANSI/TPI 1.
15) Warning: Additional permanent and stability bracing for truss system (not part of this component design) is always required.

LOAD CASE(S) Standard

WARNING - Verify design parameters and READ NOTES ON THIS AND INCLUDED MITEK REFERENCE PAGE MII-7473 rev. 1/2/2023 BEFORE USE.
Design valid for use only with MiTek® connectors. This design is based only upon parameters shown, and is for an individual building component, not a truss system. Before use, the building designer must verify the applicability of design parameters and properly incorporate this design into the overall building design. Bracing indicated is to prevent buckling of individual truss web and/or chord members only. Additional temporary and permanent bracing is always required for stability and to prevent collapse with possible personal injury and property damage. For general guidance regarding the fabrication, storage, delivery, erection and bracing of trusses and truss systems, see **ANSI/TPI1 Quality Criteria and DSB-22** available from Truss Plate Institute (www.tpinst.org) and **BCSI Building Component Safety Information** available from the Structural Building Component Association (www.sbcacomponents.com)

ENGINEERING BY TRENCO A MiTek Affiliate
818 Soundside Road
Edenton, NC 27932

Job	Truss	Truss Type	Qty	Ply	12 Mason Ridge - Wilmington B - Roof
25070038	A02	Roof Special	6	1	I69852576 Job Reference (optional)

Carter Components (Sanford, NC), Sanford, NC - 27332,

Run: 8.73 S Oct 31 2024 Print: 8.730 S Oct 31 2024 MiTek Industries, Inc. Tue Nov 26 10:11:41 Page: 1
ID:mnRSWvy_5Gboq0dv5C5SnJzvUx5-RfC?PsB70Hq3NSgPqnL8w3uITXbGKWrCDoi7J4zJC?f

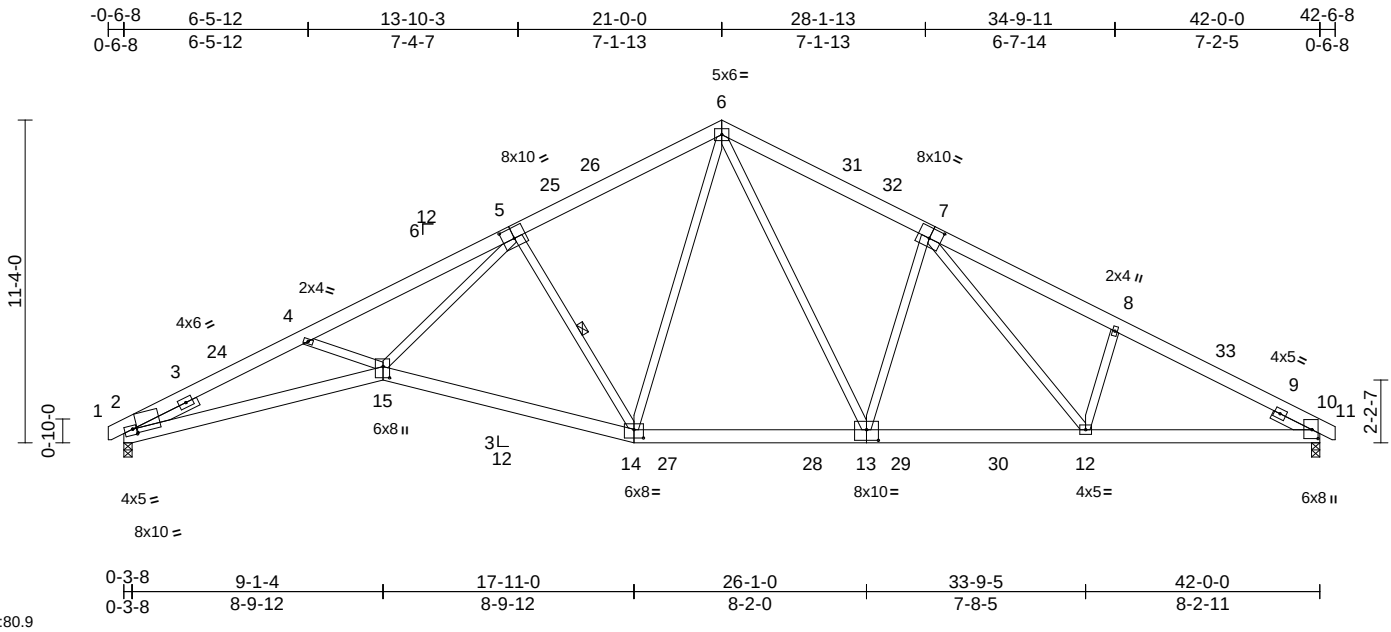

Scale = 1:80.9

Plate Offsets (X, Y): [2:0-1-14,0-2-0], [2:0-1-8,0-2-7], [5:0-5-0,0-4-8], [7:0-5-0,0-4-8], [10:0-3-12,0-2-9], [13:0-5-0,0-4-8], [14:0-4-0,0-3-8], [15:0-4-12,0-2-12]

Loading	(psf)	Spacing	2-0-0	CSI		DEFL	in	(loc)	l/defl	L/d	PLATES	GRIP
TCLL (roof)	20.0	Plate Grip DOL	1.15	TC	0.87	Vert(LL)	-0.35	14-15	>999	240	MT20	244/190
Snow (Pf)	20.0	Lumber DOL	1.15	BC	0.81	Vert(CT)	-0.65	14-15	>766	180		
TCDL	10.0	Rep Stress Incr	YES	WB	0.75	Horz(CT)	0.27	10	n/a	n/a		
BCLL	0.0*	Code	IRC2018/TPI2014	Matrix-MSH								
BCDL	10.0										Weight: 307 lb	FT = 20%

LUMBER

TOP CHORD 2x6 SP No.2
BOT CHORD 2x6 SP No.2 *Except* 2-15:2x6 SP 2400F 2.0E
WEBS 2x4 SP No.3 *Except* 14-6,13-6,5-15:2x4 SP No.2
SLIDER Left 2x4 SP No.3 -- 2-6-0, Right 2x4 SP No.3 -- 1-6-0

BRACING

TOP CHORD Structural wood sheathing directly applied or 2-0-2 oc purlins.
BOT CHORD Rigid ceiling directly applied or 10-0-0 oc bracing.
WEBS 1 Row at midpt 5-14

REACTIONS (size) 2=0-3-8, 10=0-3-8
Max Horiz 2=170 (LC 14)
Max Uplift 2=-172 (LC 14), 10=-172 (LC 15)
Max Grav 2=1857 (LC 3), 10=1879 (LC 3)

FORCES (lb) - Maximum Compression/Maximum Tension
TOP CHORD 1-2=0/17, 2-4=-5311/606, 4-6=-5230/517, 6-8=-3059/410, 8-10=-3170/318, 10-11=0/17
BOT CHORD 2-15=-645/4825, 14-15=-279/2896, 12-14=-125/2418, 10-12=-185/2749
WEBS 6-14=-145/971, 6-13=-191/1113, 7-13=-706/287, 7-12=-120/501, 8-12=-262/189, 4-15=-121/199, 5-15=-258/2770, 5-14=-1489/351

NOTES

1) Unbalanced roof live loads have been considered for this design.
2) Wind: ASCE 7-16; Vult=130mph (3-second gust) Vasd=103mph; TCDL=6.0psf; BCDL=6.0psf; h=25ft; Cat. II; Exp B; Enclosed; MWFRS (envelope) exterior zone and C-C Exterior(2E) -0-5-14 to 3-8-7, Interior (1) 3-8-7 to 16-9-11, Exterior(2R) 16-9-11 to 25-2-5, Interior (1) 25-2-5 to 38-3-9, Exterior(2E) 38-3-9 to 42-5-14 zone; cantilever left and right exposed ; end vertical left and right exposed;C-C for members and forces & MWFRS for reactions shown; Lumber DOL=1.60 plate grip DOL=1.60
3) TCLL: ASCE 7-16; Pr=20.0 psf (roof LL: Lum DOL=1.15 Plate DOL=1.15); Pf=20.0 psf (Lum DOL=1.15 Plate DOL=1.15); Is=1.0; Rough Cat B; Fully Exp.; Ce=0.9; Cs=1.00; Ct=1.10
4) Unbalanced snow loads have been considered for this design.
5) This truss has been designed for greater of min roof live load of 12.0 psf or 1.00 times flat roof load of 20.0 psf on overhangs non-concurrent with other live loads.
6) This truss has been designed for a 10.0 psf bottom chord live load nonconcurrent with any other live loads.
7) * This truss has been designed for a live load of 20.0psf on the bottom chord in all areas where a rectangle 3-06-00 tall by 2-00-00 wide will fit between the bottom chord and any other members, with BCDL = 10.0psf.
8) Bearing at joint(s) 2 considers parallel to grain value using ANSI/TPI 1 angle to grain formula. Building designer should verify capacity of bearing surface.
9) One H2.5A Simpson Strong-Tie connectors recommended to connect truss to bearing walls due to UPLIFT at jt(s) 10 and 2. This connection is for uplift only and does not consider lateral forces.
10) This truss is designed in accordance with the 2018 International Residential Code sections R502.11.1 and R802.10.2 and referenced standard ANSI/TPI 1.

LOAD CASE(S) Standard

November 27,2024

WARNING - Verify design parameters and READ NOTES ON THIS AND INCLUDED MITEK REFERENCE PAGE MII-7473 rev. 1/2/2023 BEFORE USE.
Design valid for use only with MiTek® connectors. This design is based only upon parameters shown, and is for an individual building component, not a truss system. Before use, the building designer must verify the applicability of design parameters and properly incorporate this design into the overall building design. Bracing indicated is to prevent buckling of individual truss web and/or chord members only. Additional temporary and permanent bracing is always required for stability and to prevent collapse with possible personal injury and property damage. For general guidance regarding the fabrication, storage, delivery, erection and bracing of trusses and truss systems, see **ANSI/TPI1 Quality Criteria and DSB-22** available from Truss Plate Institute (www.tpinst.org) and **BCSI Building Component Safety Information** available from the Structural Building Component Association (www.sbcacomponents.com)

ENGINEERING BY TRENCO A MiTek Affiliate
818 Soundside Road
Edenton, NC 27932

Job	Truss	Truss Type	Qty	Ply	12 Mason Ridge - Wilmington B - Roof
25070038	A03	Roof Special	2	1	I69852577 Job Reference (optional)

Carter Components (Sanford, NC), Sanford, NC - 27332, Run: 8.73 S Oct 31 2024 Print: 8.730 S Oct 31 2024 MiTek Industries, Inc. Tue Nov 26 10:11:41 Page: 1
ID:ei_OzHALbhuf1F4lrDJXlCzvUqM-RfC?PsB70Hq3NSgPqnL8w3uITXbGKWrCDoi7J4zJC?f

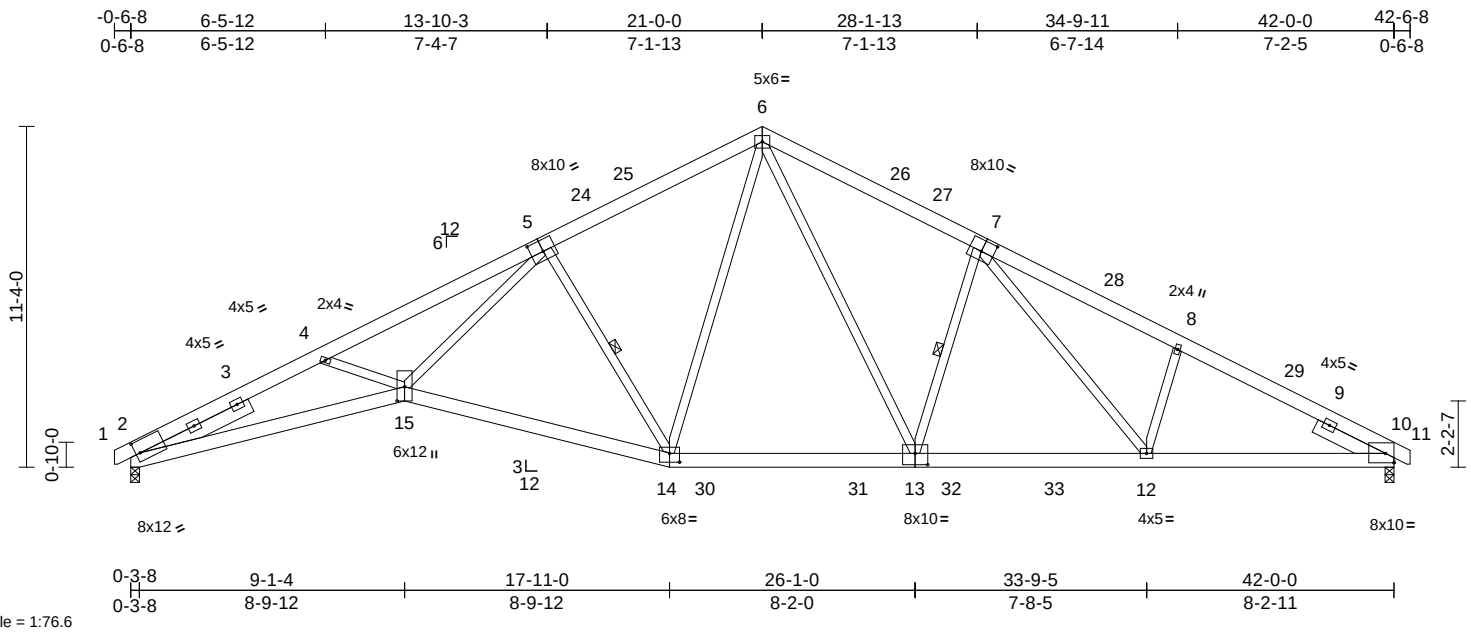

Scale = 1:76.6

Plate Offsets (X, Y): [2:0-1-12,0-4-12], [5:0-5-0,0-4-8], [7:0-5-0,0-4-8], [10:Edge,0-3-12], [13:0-5-0,0-4-8], [14:0-4-0,0-3-8], [15:0-5-11,0-3-0]

Loading	(psf)	Spacing	2-0-0	CSI		DEFL	in	(loc)	l/defl	L/d	PLATES	GRIP
TCLL (roof)	20.0	Plate Grip DOL	1.15	TC	0.76	Vert(LL)	-0.35	14-15	>999	240	MT20	244/190
Snow (Pf)	20.0	Lumber DOL	1.15	BC	0.83	Vert(CT)	-0.66	14-15	>754	180		
TCDL	10.0	Rep Stress Incr	YES	WB	0.74	Horz(CT)	0.28	10	n/a	n/a		
BCLL	0.0*	Code	IRC2018/TPI2014	Matrix-MSH								
BCDL	10.0										Weight: 316 lb	FT = 20%

LUMBER

TOP CHORD 2x6 SP No.2
BOT CHORD 2x6 SP No.2 *Except* 2-15:2x6 SP 2400F 2.0E
WEBS 2x4 SP No.3 *Except* 5-15,14-6,13-6:2x4 SP No.2
SLIDER Left 2x6 SP No.2 -- 4-0-0, Right 2x6 SP No.2 -- 2-6-0

BRACING

TOP CHORD Structural wood sheathing directly applied or 2-2-0 oc purlins.
BOT CHORD Rigid ceiling directly applied or 10-0-0 oc bracing.
WEBS 1 Row at midpt 5-14, 7-13

REACTIONS (size) 2=0-3-8, 10=0-3-8
Max Horiz 2=170 (LC 18)
Max Uplift 2=-195 (LC 14), 10=-337 (LC 15)
Max Grav 2=1985 (LC 3), 10=2790 (LC 3)

FORCES (lb) - Maximum Compression/Maximum Tension
TOP CHORD 1-2=0/17, 2-4=-6456/683, 4-6=-6427/605, 6-8=-4853/631, 8-10=-5113/602, 10-11=0/17
BOT CHORD 2-15=-710/5803, 14-15=-333/3548, 12-14=-244/3260, 10-12=-449/4360
WEBS 8-12=-927/292, 4-15=-48/211, 5-15=-298/3349, 5-14=-1733/365, 6-14=-144/1016, 7-13=-1110/352, 6-13=-256/1587, 7-12=-258/1422

NOTES

1) Unbalanced roof live loads have been considered for this design.
2) Wind: ASCE 7-16; Vult=130mph (3-second gust) Vasd=103mph; TCDL=6.0psf; BCDL=6.0psf; h=25ft; Cat. II; Exp B; Enclosed; MWFRS (envelope) exterior zone and C-C Exterior(2E) -0-5-14 to 3-8-7, Interior (1) 3-8-7 to 16-9-11, Exterior(2R) 16-9-11 to 25-2-5, Interior (1) 25-2-5 to 38-3-9, Exterior(2E) 38-3-9 to 42-5-14 zone; cantilever left and right exposed ; end vertical left and right exposed;C-C for members and forces & MWFRS for reactions shown; Lumber DOL=1.60 plate grip DOL=1.60
3) TCLL: ASCE 7-16; Pr=20.0 psf (roof LL: Lum DOL=1.15 Plate DOL=1.15); Pf=20.0 psf (Lum DOL=1.15 Plate DOL=1.15); Is=1.0; Rough Cat B; Fully Exp.; Ce=0.9; Cs=1.00; Ct=1.10
4) Unbalanced snow loads have been considered for this design.
5) This truss has been designed for greater of min roof live load of 12.0 psf or 1.00 times flat roof load of 20.0 psf on overhangs non-concurrent with other live loads.
6) This truss has been designed for a 10.0 psf bottom chord live load nonconcurrent with any other live loads.
7) * This truss has been designed for a live load of 20.0psf on the bottom chord in all areas where a rectangle 3-06-00 tall by 2-00-00 wide will fit between the bottom chord and any other members, with BCDL = 10.0psf.
8) Bearing at joint(s) 2 considers parallel to grain value using ANSI/TPI 1 angle to grain formula. Building designer should verify capacity of bearing surface.
9) One H2.5A Simpson Strong-Tie connectors recommended to connect truss to bearing walls due to UPLIFT at jt(s) 10 and 2. This connection is for uplift only and does not consider lateral forces.
10) This truss is designed in accordance with the 2018 International Residential Code sections R502.11.1 and R802.10.2 and referenced standard ANSI/TPI 1.

LOAD CASE(S) Standard

1) Dead + Snow (balanced): Lumber Increase=1.15, Plate Increase=1.15

Uniform Loads (lb/ft)
Vert: 1-6=-60, 6-28=-60, 11-17=-60, 15-20=-20, 14-15=-20, 14-16=-20
Trapezoidal Loads (lb/ft)
Vert: 28=-180-to-8=-193, 8=-193-to-29=-210, 29=-210-to-9=-218, 9=-218-to-17=-222

November 27,2024

WARNING - Verify design parameters and READ NOTES ON THIS AND INCLUDED MITEK REFERENCE PAGE MII-7473 rev. 1/2/2023 BEFORE USE.
Design valid for use only with MiTek® connectors. This design is based only upon parameters shown, and is for an individual building component, not a truss system. Before use, the building designer must verify the applicability of design parameters and properly incorporate this design into the overall building design. Bracing indicated is to prevent buckling of individual truss web and/or chord members only. Additional temporary and permanent bracing is always required for stability and to prevent collapse with possible personal injury and property damage. For general guidance regarding the fabrication, storage, delivery, erection and bracing of trusses and truss systems, see **ANSI/TPI1 Quality Criteria and DSB-22** available from Truss Plate Institute (www.tpinst.org) and **BCSI Building Component Safety Information** available from the Structural Building Component Association (www.sbcacomponents.com)

ENGINEERING BY TRENCO A MiTek Affiliate
818 Soundside Road
Edenton, NC 27932

Job	Truss	Truss Type	Qty	Ply	12 Mason Ridge - Wilmington B - Roof
25070038	A04	Roof Special	2	1	I69852578 Job Reference (optional)

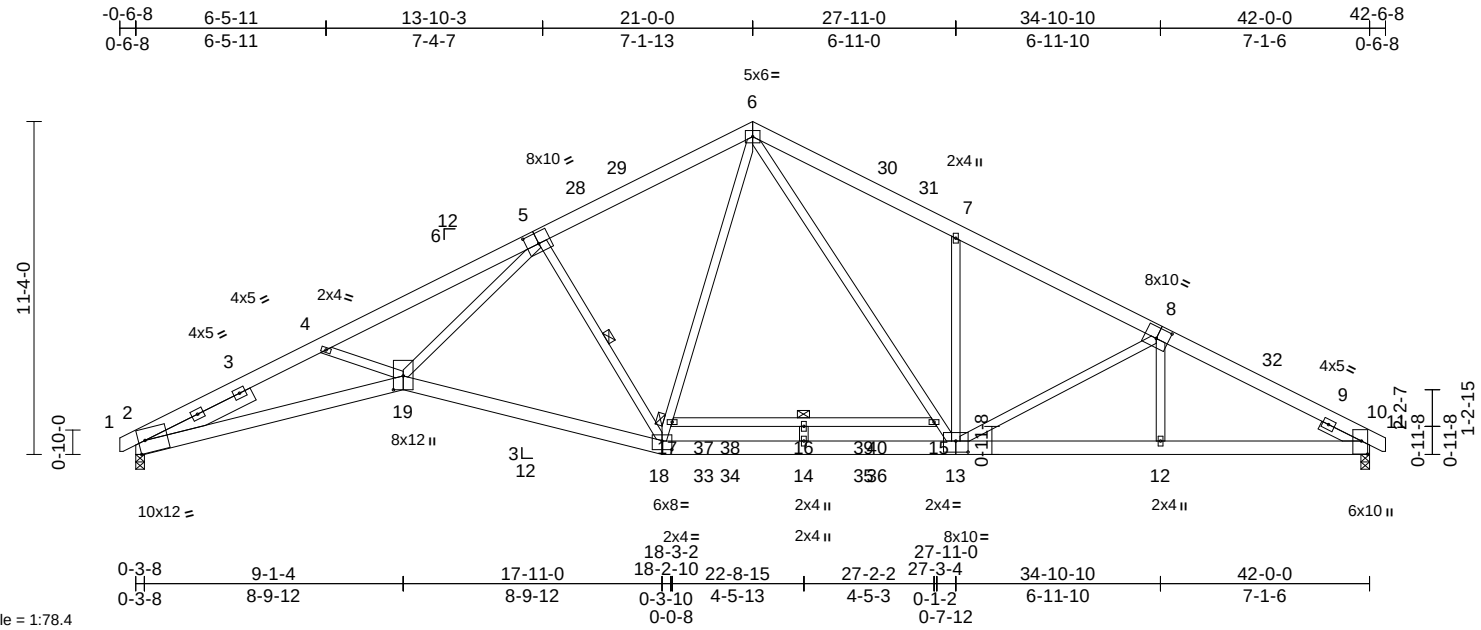

Scale = 1:78.4

Plate Offsets (X, Y): [2:0-2-11,Edge], [5:0-5-0,0-4-8], [8:0-5-0,0-4-8], [10:0-5-6,0-2-8], [13:0-5-0,0-4-8], [18:0-4-0,0-3-8], [19:0-5-11,0-4-0]

Loading	(psf)	Spacing	2-0-0	CSI		DEFL	in	(loc)	l/defl	L/d	PLATES	GRIP
TCLL (roof)	20.0	Plate Grip DOL	1.15	TC	0.85	Vert(LL)	-0.38	16-17	>999	240	MT20	244/190
Snow (Pf)	20.0	Lumber DOL	1.15	BC	0.91	Vert(CT)	-0.77	16-17	>654	180		
TCDL	10.0	Rep Stress Incr	YES	WB	0.78	Horz(CT)	0.29	10	n/a	n/a		
BCLL	0.0*	Code	IRC2018/TPI2014	Matrix-MSH								
BCDL	10.0										Weight: 326 lb	FT = 20%

LUMBER

TOP CHORD 2x6 SP No.2
BOT CHORD 2x6 SP 2400F 2.0E *Except* 19-18:2x6 SP No.2, 17-15:2x4 SP No.2
WEBS 2x4 SP No.3 *Except* 19-5,18-6,13-6:2x4 SP No.2
SLIDER Left 2x6 SP No.2 -- 4-0-0, Right 2x4 SP No.3 -- 1-6-0

BRACING

TOP CHORD Structural wood sheathing directly applied or 2-1-13 oc purlins.
BOT CHORD Rigid ceiling directly applied or 2-2-0 oc bracing.
WEBS 1 Row at midpt 5-18

REACTIONS (size) 2=0-3-8, 10=0-3-8
Max Horiz 2=170 (LC 14)
Max Uplift 2=-29 (LC 14), 10=-3 (LC 15)
Max Grav 2=2122 (LC 3), 10=2174 (LC 3)

FORCES (lb) - Maximum Compression/Maximum Tension
TOP CHORD 1-2=0/17, 2-4=-6842/129, 4-6=-6834/68, 6-7=-3867/72, 7-10=-4085/2, 10-11=0/17
BOT CHORD 2-19=-216/6147, 18-19=0/3822, 14-18=0/2456, 12-14=0/3552, 10-12=0/3551, 16-17=-69/0, 15-16=-69/0
WEBS 4-19=-42/250, 5-19=-65/3487, 5-18=-1786/276, 17-18=-19/1248, 6-17=0/1371, 6-15=-66/1678, 13-15=-106/1562, 7-13=-569/251, 8-13=-320/249, 8-12=-51/58, 14-16=-240/0

NOTES

1) Unbalanced roof live loads have been considered for this design.
2) Wind: ASCE 7-16; Vult=130mph (3-second gust) Vasd=103mph; TCDL=6.0psf; BCDL=6.0psf; h=25ft; Cat. II; Exp B; Enclosed; MWFRS (envelope) exterior zone and C-C Exterior(2E) -0-5-14 to 3-8-7, Interior (1) 3-8-7 to 16-9-11, Exterior(2R) 16-9-11 to 25-2-5, Interior (1) 25-2-5 to 38-3-9, Exterior(2E) 38-3-9 to 42-5-14 zone; cantilever left and right exposed ; end vertical left and right exposed;C-C for members and forces & MWFRS for reactions shown; Lumber DOL=1.60 plate grip DOL=1.60
3) TCLL: ASCE 7-16; Pr=20.0 psf (roof LL: Lum DOL=1.15 Plate DOL=1.15); Pf=20.0 psf (Lum DOL=1.15 Plate DOL=1.15); Is=1.0; Rough Cat B; Fully Exp.; Ce=0.9; Cs=1.00; Ct=1.10
4) Unbalanced snow loads have been considered for this design.
5) This truss has been designed for greater of min roof live load of 12.0 psf or 1.00 times flat roof load of 20.0 psf on overhangs non-concurrent with other live loads.
6) 200.0lb AC unit load placed on the bottom chord, 22-9-0 from left end, supported at two points, 5-0-0 apart.
7) This truss has been designed for a 10.0 psf bottom chord live load nonconcurrent with any other live loads.
8) * This truss has been designed for a live load of 20.0psf on the bottom chord in all areas where a rectangle 3-06-00 tall by 2-00-00 wide will fit between the bottom chord and any other members, with BCDL = 10.0psf.
9) Bearing at joint(s) 2 considers parallel to grain value using ANSI/TPI 1 angle to grain formula. Building designer should verify capacity of bearing surface.
10) One H2.5A Simpson Strong-Tie connectors recommended to connect truss to bearing walls due to UPLIFT at jt(s) 10 and 2. This connection is for uplift only and does not consider lateral forces.
11) This truss is designed in accordance with the 2018 International Residential Code sections R502.11.1 and R802.10.2 and referenced standard ANSI/TPI 1.

LOAD CASE(S) Standard

November 27,2024

WARNING - Verify design parameters and READ NOTES ON THIS AND INCLUDED MITEK REFERENCE PAGE MII-7473 rev. 1/2/2023 BEFORE USE.
Design valid for use only with MiTek® connectors. This design is based only upon parameters shown, and is for an individual building component, not a truss system. Before use, the building designer must verify the applicability of design parameters and properly incorporate this design into the overall building design. Bracing indicated is to prevent buckling of individual truss web and/or chord members only. Additional temporary and permanent bracing is always required for stability and to prevent collapse with possible personal injury and property damage. For general guidance regarding the fabrication, storage, delivery, erection and bracing of trusses and truss systems, see **ANSI/TPI1 Quality Criteria and DSB-22** available from Truss Plate Institute (www.tpinst.org) and **BCSI Building Component Safety Information** available from the Structural Building Component Association (www.sbcacomponents.com)

ENGINEERING BY TRENCO A MiTek Affiliate
818 Soundside Road
Edenton, NC 27932

Job	Truss	Truss Type	Qty	Ply	12 Mason Ridge - Wilmington B - Roof
25070038	A05	Common	4	1	I69852579 Job Reference (optional)

Carter Components (Sanford, NC), Sanford, NC - 27332,

Run: 8.73 S Oct 31 2024 Print: 8.730 S Oct 31 2024 MiTek Industries, Inc. Tue Nov 26 10:11:41 Page: 1
ID:e5mM9kSiL8V3Za2pN8N0Y8zvUOt-RfC?PsB70Hq3NSgPqnL8w3uITXbGKWrCDoi7J4zJC?f

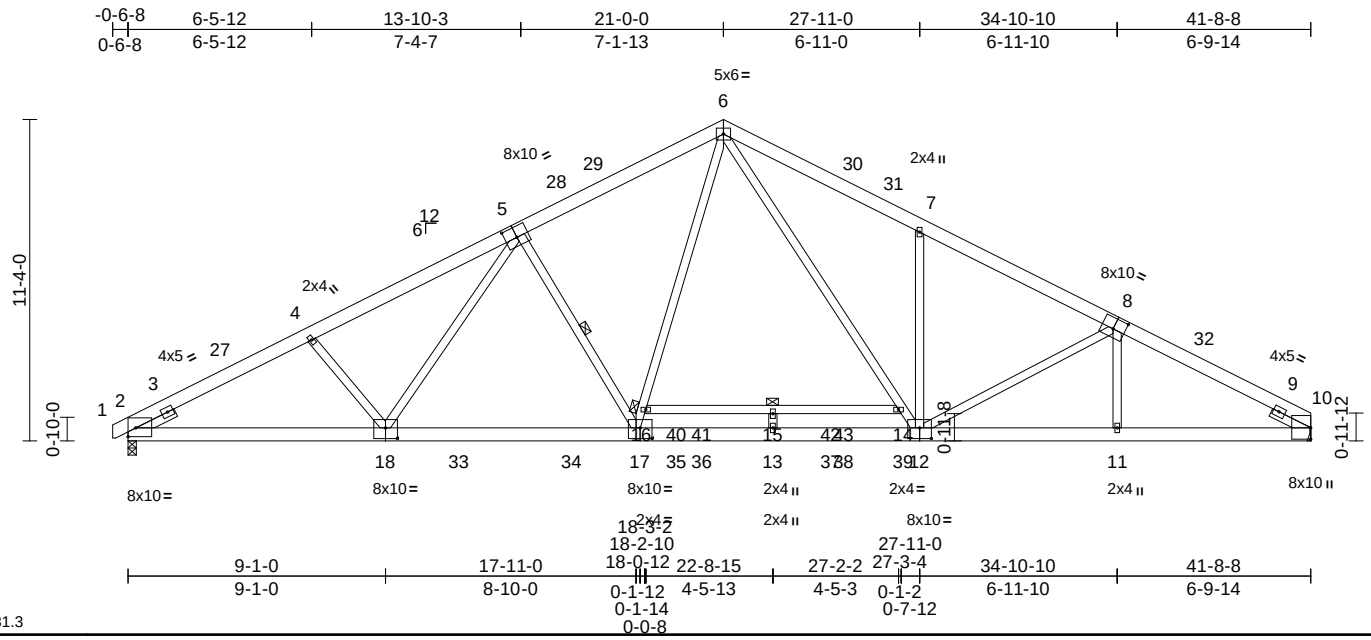

Scale = 1:81.3

Plate Offsets (X, Y): [2:Edge,0-3-12], [5:0-5-0,0-4-8], [8:0-5-0,0-4-8], [12:0-5-0,0-4-8], [17:0-5-0,0-4-8], [18:0-5-0,0-4-8]

Loading	(psf)	Spacing	2-0-0	CSI		DEFL	in	(loc)	l/defl	L/d	PLATES	GRIP
TCLL (roof)	20.0	Plate Grip DOL	1.15	TC	0.60	Vert(LL)	-0.26	15-16	>999	240	MT20	244/190
Snow (Pf)	20.0	Lumber DOL	1.15	BC	0.93	Vert(CT)	-0.53	15-16	>949	180		
TCDL	10.0	Rep Stress Incr	YES	WB	0.79	Horz(CT)	0.10	10	n/a	n/a		
BCLL	0.0*	Code	IRC2018/TPI2014	Matrix-MSH								
BCDL	10.0										Weight: 319 lb	FT = 20%

LUMBER

TOP CHORD 2x6 SP No.2
BOT CHORD 2x6 SP 2400F 2.0E *Except* 2-18:2x6 SP No.2, 16-14:2x4 SP No.2
WEBS 2x4 SP No.3 *Except* 12-6,17-6:2x4 SP No.2
SLIDER Left 2x4 SP No.3 -- 1-6-0, Right 2x4 SP No.3 -- 1-6-0

BRACING

TOP CHORD Structural wood sheathing directly applied or 2-11-6 oc purlins.
BOT CHORD Rigid ceiling directly applied or 2-2-0 oc bracing.
WEBS 1 Row at midpt 5-17

REACTIONS (size) 2=0-3-8, 10= Mechanical
Max Horiz 2=177 (LC 14)
Max Uplift 2=-30 (LC 14)
Max Grav 2=2155 (LC 3), 10=2156 (LC 3)

FORCES (lb) - Maximum Compression/Maximum Tension
TOP CHORD 1-2=0/17, 2-4=-4090/58, 4-6=-3920/69, 6-7=-3862/79, 7-10=-4038/5
BOT CHORD 2-13=-123/3546, 11-13=0/3500, 10-11=-17/3500, 15-16=-164/0, 14-15=-164/0
WEBS 6-14=-88/1595, 12-14=-133/1429, 7-12=-572/251, 16-17=0/1314, 6-16=0/1461, 4-18=-243/200, 5-18=-100/424, 5-17=-702/299, 8-12=-283/242, 8-11=-88/17, 13-15=-255/0

NOTES

1) Unbalanced roof live loads have been considered for this design.
2) Wind: ASCE 7-16; Vult=130mph (3-second gust) Vasd=103mph; TCDL=6.0psf; BCDL=6.0psf; h=25ft; Cat. II; Exp B; Enclosed; MWFRS (envelope) exterior zone and C-C Exterior(2E) -0-5-14 to 3-8-2, Interior (1) 3-8-2 to 16-10-1, Exterior(2R) 16-10-1 to 25-1-15, Interior (1) 25-1-15 to 37-6-9, Exterior(2E) 37-6-9 to 41-8-8 zone; cantilever left and right exposed ; end vertical left exposed;C-C for members and forces & MWFRS for reactions shown; Lumber DOL=1.60 plate grip DOL=1.60
3) TCLL: ASCE 7-16; Pr=20.0 psf (roof LL: Lum DOL=1.15 Plate DOL=1.15); Pf=20.0 psf (Lum DOL=1.15 Plate DOL=1.15); Is=1.0; Rough Cat B; Fully Exp.; Ce=0.9; Cs=1.00; Ct=1.10
4) Unbalanced snow loads have been considered for this design.
5) This truss has been designed for greater of min roof live load of 12.0 psf or 1.00 times flat roof load of 20.0 psf on overhangs non-concurrent with other live loads.
6) 200.0lb AC unit load placed on the bottom chord, 22-9-0 from left end, supported at two points, 5-0-0 apart.
7) This truss has been designed for a 10.0 psf bottom chord live load nonconcurrent with any other live loads.
8) * This truss has been designed for a live load of 20.0psf on the bottom chord in all areas where a rectangle 3-06-00 tall by 2-00-00 wide will fit between the bottom chord and any other members, with BCDL = 10.0psf.
9) Refer to girder(s) for truss to truss connections.
10) One H2.5A Simpson Strong-Tie connectors recommended to connect truss to bearing walls due to UPLIFT at jt(s) 2. This connection is for uplift only and does not consider lateral forces.
11) This truss is designed in accordance with the 2018 International Residential Code sections R502.11.1 and R802.10.2 and referenced standard ANSI/TPI 1.

LOAD CASE(S) Standard

November 27,2024

WARNING - Verify design parameters and READ NOTES ON THIS AND INCLUDED MITEK REFERENCE PAGE MII-7473 rev. 1/2/2023 BEFORE USE.
Design valid for use only with MiTek® connectors. This design is based only upon parameters shown, and is for an individual building component, not a truss system. Before use, the building designer must verify the applicability of design parameters and properly incorporate this design into the overall building design. Bracing indicated is to prevent buckling of individual truss web and/or chord members only. Additional temporary and permanent bracing is always required for stability and to prevent collapse with possible personal injury and property damage. For general guidance regarding the fabrication, storage, delivery, erection and bracing of trusses and truss systems, see **ANSI/TPI1 Quality Criteria and DSB-22** available from Truss Plate Institute (www.tpinst.org) and **BCSI Building Component Safety Information** available from the Structural Building Component Association (www.sbcacomponents.com)

ENGINEERING BY TRENCO A MiTek Affiliate
818 Soundside Road
Edenton, NC 27932

Job	Truss	Truss Type	Qty	Ply	12 Mason Ridge - Wilmington B - Roof
25070038	A06	Common	1	1	I69852580 Job Reference (optional)

Carter Components (Sanford, NC), Sanford, NC - 27332,

Run: 8.73 S Oct 31 2024 Print: 8.730 S Oct 31 2024 MiTek Industries, Inc. Tue Nov 26 10:11:41 Page: 1
ID:ka8lyh7OlYpx1IIEB?qJtEzvUK7-RfC?PsB70Hq3NSgPqnL8w3uITXbGKWrCDoi7J4zJC?f

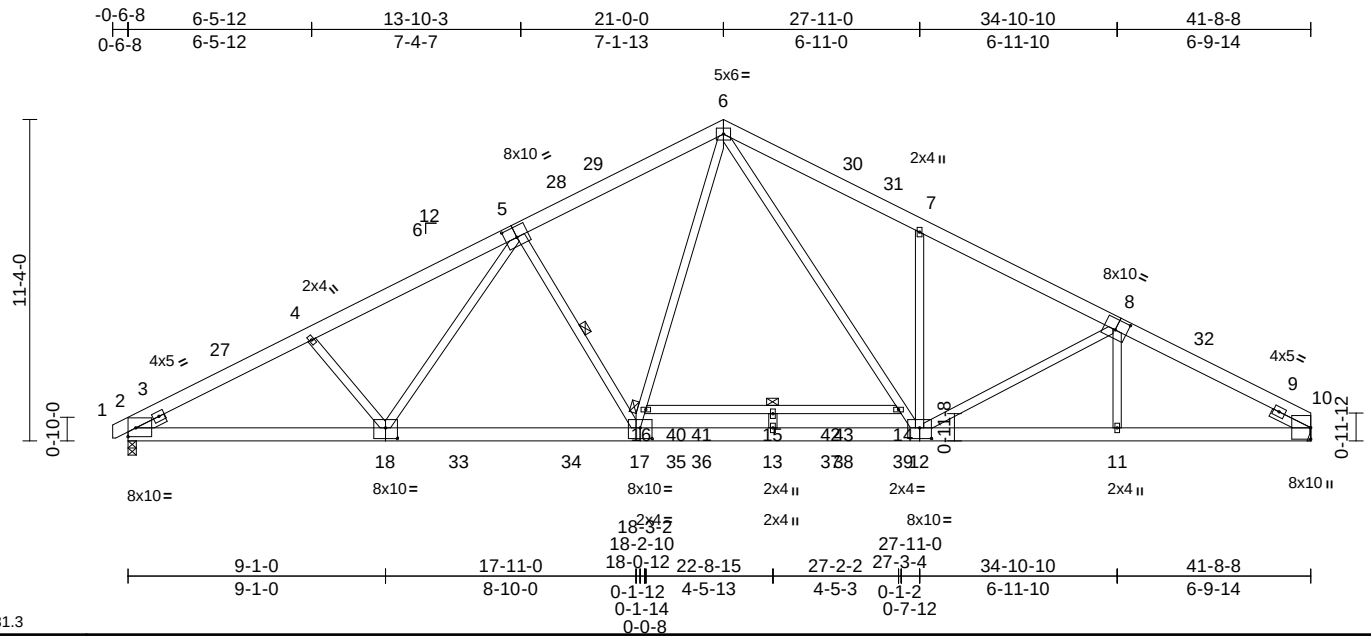

Scale = 1:81.3

Plate Offsets (X, Y): [2:Edge,0-3-12], [5:0-5-0,0-4-8], [8:0-5-0,0-4-8], [12:0-5-0,0-4-8], [17:0-5-0,0-4-8], [18:0-5-0,0-4-8]

Loading	(psf)	Spacing	2-0-0	CSI		DEFL	in	(loc)	l/defl	L/d	PLATES	GRIP
TCLL (roof)	20.0	Plate Grip DOL	1.15	TC	0.62	Vert(LL)	-0.26	15-16	>999	240	MT20	244/190
Snow (Pf)	20.0	Lumber DOL	1.15	BC	0.98	Vert(CT)	-0.53	15-16	>941	180		
TCDL	10.0	Rep Stress Incr	YES	WB	0.79	Horz(CT)	0.10	10	n/a	n/a		
BCLL	0.0*	Code	IRC2018/TPI2014	Matrix-MSH								
BCDL	10.0										Weight: 318 lb	FT = 20%

LUMBER

TOP CHORD 2x6 SP No.2
BOT CHORD 2x6 SP 2400F 2.0E *Except* 18-2:2x6 SP No.2, 16-14:2x4 SP No.2
WEBS 2x4 SP No.3 *Except* 17-6,12-6:2x4 SP No.2
SLIDER Left 2x4 SP No.3 -- 1-1-2, Right 2x4 SP No.3 -- 1-6-0

BRACING

TOP CHORD Structural wood sheathing directly applied or 2-11-15 oc purlins.
BOT CHORD Rigid ceiling directly applied or 2-2-0 oc bracing.
WEBS 1 Row at midpt 5-17

REACTIONS (size) 2=0-3-8, 10= Mechanical
Max Horiz 2=177 (LC 14)
Max Uplift 2=-30 (LC 14)
Max Grav 2=2155 (LC 3), 10=2156 (LC 3)

FORCES (lb) - Maximum Compression/Maximum Tension
TOP CHORD 1-2=0/17, 2-4=-4095/58, 4-6=-3914/69, 6-7=-3863/80, 7-10=-4039/5
BOT CHORD 2-13=-123/3547, 11-13=0/3501, 10-11=-17/3501, 15-16=-164/0, 14-15=-164/0
WEBS 4-18=-250/200, 5-18=-100/417, 16-17=0/1316, 6-16=0/1463, 8-11=-87/17, 7-12=-575/253, 6-14=-89/1595, 12-14=-134/1430, 5-17=-698/299, 8-12=-282/242, 13-15=-255/0

NOTES

1) Unbalanced roof live loads have been considered for this design.
2) Wind: ASCE 7-16; Vult=130mph (3-second gust) Vasd=103mph; TCDL=6.0psf; BCDL=6.0psf; h=25ft; Cat. II; Exp B; Enclosed; MWFRS (envelope) exterior zone and C-C Exterior(2E) -0-5-14 to 3-8-2, Interior (1) 3-8-2 to 16-10-1, Exterior(2R) 16-10-1 to 25-1-15, Interior (1) 25-1-15 to 37-6-9, Exterior(2E) 37-6-9 to 41-8-8 zone; cantilever left and right exposed ; end vertical left exposed;C-C for members and forces & MWFRS for reactions shown; Lumber DOL=1.60 plate grip DOL=1.60
3) TCLL: ASCE 7-16; Pr=20.0 psf (roof LL: Lum DOL=1.15 Plate DOL=1.15); Pf=20.0 psf (Lum DOL=1.15 Plate DOL=1.15); Is=1.0; Rough Cat B; Fully Exp.; Ce=0.9; Cs=1.00; Ct=1.10
4) Unbalanced snow loads have been considered for this design.
5) This truss has been designed for greater of min roof live load of 12.0 psf or 1.00 times flat roof load of 20.0 psf on overhangs non-concurrent with other live loads.
6) 200.0lb AC unit load placed on the bottom chord, 22-9-0 from left end, supported at two points, 5-0-0 apart.
7) This truss has been designed for a 10.0 psf bottom chord live load nonconcurrent with any other live loads.
8) * This truss has been designed for a live load of 20.0psf on the bottom chord in all areas where a rectangle 3-06-00 tall by 2-00-00 wide will fit between the bottom chord and any other members, with BCDL = 10.0psf.
9) Refer to girder(s) for truss to truss connections.
10) One H2.5A Simpson Strong-Tie connectors recommended to connect truss to bearing walls due to UPLIFT at jt(s) 2. This connection is for uplift only and does not consider lateral forces.
11) This truss is designed in accordance with the 2018 International Residential Code sections R502.11.1 and R802.10.2 and referenced standard ANSI/TPI 1.

LOAD CASE(S) Standard

November 27,2024

WARNING - Verify design parameters and READ NOTES ON THIS AND INCLUDED MITEK REFERENCE PAGE MII-7473 rev. 1/2/2023 BEFORE USE.
Design valid for use only with MiTek® connectors. This design is based only upon parameters shown, and is for an individual building component, not a truss system. Before use, the building designer must verify the applicability of design parameters and properly incorporate this design into the overall building design. Bracing indicated is to prevent buckling of individual truss web and/or chord members only. Additional temporary and permanent bracing is always required for stability and to prevent collapse with possible personal injury and property damage. For general guidance regarding the fabrication, storage, delivery, erection and bracing of trusses and truss systems, see **ANSI/TPI1 Quality Criteria and DSB-22** available from Truss Plate Institute (www.tpinst.org) and **BCSI Building Component Safety Information** available from the Structural Building Component Association (www.sbcacomponents.com)

ENGINEERING BY TRENCO A MiTek Affiliate
818 Soundside Road
Edenton, NC 27932

Job	Truss	Truss Type	Qty	Ply	12 Mason Ridge - Wilmington B - Roof
25070038	A07	Common	4	1	I69852581 Job Reference (optional)

Carter Components (Sanford, NC), Sanford, NC - 27332,

Run: 8.73 S Oct 31 2024 Print: 8.730 S Oct 31 2024 MiTek Industries, Inc. Tue Nov 26 10:11:42 Page: 1
ID:WTFSTUFjr6Wkhbv681?78szvUIg-RfC?PsB70Hq3NSgPqnL8w3uITXbGKWrCDoi7J4zJC?f

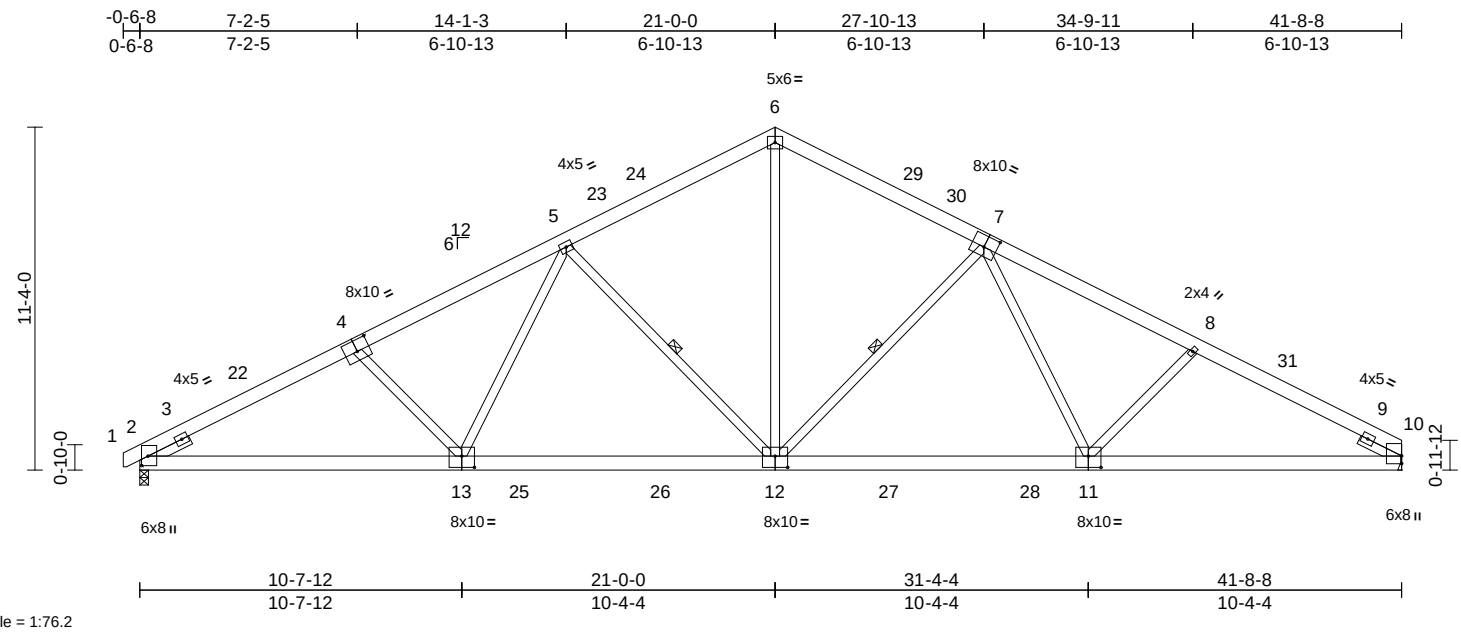

Scale = 1:76.2

Plate Offsets (X, Y): [2:0-3-12,0-2-9], [4:0-5-0,0-4-8], [7:0-5-0,0-4-8], [11:0-5-0,0-4-8], [12:0-5-0,0-4-8], [13:0-5-0,0-4-8]

Loading	(psf)	Spacing	2-0-0	CSI		DEFL	in	(loc)	l/defl	L/d	PLATES	GRIP
TCLL (roof)	20.0	Plate Grip DOL	1.15	TC	0.58	Vert(LL)	-0.23	11-12	>999	240	MT20	244/190
Snow (Pf)	20.0	Lumber DOL	1.15	BC	0.86	Vert(CT)	-0.40	11-12	>999	180		
TCDL	10.0	Rep Stress Incr	YES	WB	0.44	Horz(CT)	0.11	10	n/a	n/a		
BCLL	0.0*	Code	IRC2018/TPI2014	Matrix-MSH								
BCDL	10.0										Weight: 295 lb	FT = 20%

LUMBER

TOP CHORD	2x6 SP No.2
BOT CHORD	2x6 SP No.2
WEBS	2x4 SP No.3 *Except* 12-6:2x4 SP No.2
SLIDER	Left 2x4 SP No.3 -- 1-6-0, Right 2x4 SP No.3 -- 1-6-0

BRACING

TOP CHORD	Structural wood sheathing directly applied or 3-3-3 oc purlins.
BOT CHORD	Rigid ceiling directly applied or 10-0-0 oc bracing.
WEBS	1 Row at midpt 7-12, 5-12

REACTIONS (size) 2=0-3-8, 10= Mechanical
Max Horiz 2=177 (LC 14)
Max Uplift 2=-172 (LC 14), 10=-158 (LC 15)
Max Grav 2=1868 (LC 3), 10=1837 (LC 3)

FORCES (lb) - Maximum Compression/Maximum Tension

TOP CHORD	1-2=0/17, 2-5=-3520/336, 5-6=-2425/350, 6-8=-3259/349, 8-10=-3472/336
BOT CHORD	2-10=-351/3044
WEBS	6-12=-122/1715, 7-12=-849/257, 7-11=-18/568, 8-11=-272/195, 5-12=-866/258, 5-13=-26/622, 4-13=-298/200

NOTES

1) Unbalanced roof live loads have been considered for this design.
2) Wind: ASCE 7-16; Vult=130mph (3-second gust) Vasd=103mph; TCDL=6.0psf; BCDL=6.0psf; h=25ft; Cat. II; Exp B; Enclosed; MWFRS (envelope) exterior zone and C-C Exterior(2E) -0-5-14 to 3-8-2, Interior (1) 3-8-2 to 16-10-1, Exterior(2R) 16-10-1 to 25-1-15, Interior (1) 25-1-15 to 37-6-9, Exterior(2E) 37-6-9 to 41-8-8 zone; cantilever left and right exposed ; end vertical left and right exposed;C-C for members and forces & MWFRS for reactions shown; Lumber DOL=1.60 plate grip DOL=1.60
3) TCLL: ASCE 7-16; Pr=20.0 psf (roof LL: Lum DOL=1.15 Plate DOL=1.15); Pf=20.0 psf (Lum DOL=1.15 Plate DOL=1.15); Is=1.0; Rough Cat B; Fully Exp.; Ce=0.9; Cs=1.00; Ct=1.10
4) Unbalanced snow loads have been considered for this design.
5) This truss has been designed for greater of min roof live load of 12.0 psf or 1.00 times flat roof load of 20.0 psf on overhangs non-concurrent with other live loads.
6) This truss has been designed for a 10.0 psf bottom chord live load nonconcurrent with any other live loads.
7) * This truss has been designed for a live load of 20.0psf on the bottom chord in all areas where a rectangle 3-06-00 tall by 2-00-00 wide will fit between the bottom chord and any other members, with BCDL = 10.0psf.
8) Refer to girder(s) for truss to truss connections.
9) Provide mechanical connection (by others) of truss to bearing plate capable of withstanding 158 lb uplift at joint 10.
10) One H2.5A Simpson Strong-Tie connectors recommended to connect truss to bearing walls due to UPLIFT at jt(s) 2. This connection is for uplift only and does not consider lateral forces.
11) This truss is designed in accordance with the 2018 International Residential Code sections R502.11.1 and R802.10.2 and referenced standard ANSI/TPI 1.

LOAD CASE(S) Standard

November 27,2024

WARNING - Verify design parameters and READ NOTES ON THIS AND INCLUDED MITEK REFERENCE PAGE MII-7473 rev. 1/2/2023 BEFORE USE.
Design valid for use only with MiTek® connectors. This design is based only upon parameters shown, and is for an individual building component, not a truss system. Before use, the building designer must verify the applicability of design parameters and properly incorporate this design into the overall building design. Bracing indicated is to prevent buckling of individual truss web and/or chord members only. Additional temporary and permanent bracing is always required for stability and to prevent collapse with possible personal injury and property damage. For general guidance regarding the fabrication, storage, delivery, erection and bracing of trusses and truss systems, see **ANSI/TPI1 Quality Criteria and DSB-22** available from Truss Plate Institute (www.tpinst.org) and **BCSI Building Component Safety Information** available from the Structural Building Component Association (www.sbcacomponents.com)

ENGINEERING BY TRENCO A MiTek Affiliate
818 Soundside Road
Edenton, NC 27932

Job	Truss	Truss Type	Qty	Ply	12 Mason Ridge - Wilmington B - Roof
25070038	A08	Common Supported Gable	1	1	I69852582 Job Reference (optional)

Carter Components (Sanford, NC), Sanford, NC - 27332, Run: 8.73 S Oct 31 2024 Print: 8.730 S Oct 31 2024 MiTek Industries, Inc. Tue Nov 26 10:11:42 Page: 1
ID:3_zLxHIk22pmSZKbX0XlUUzvUG1-RfC?PsB70Hq3NSgPqnL8w3uITXbGKWrCDoi7J4zJC?f

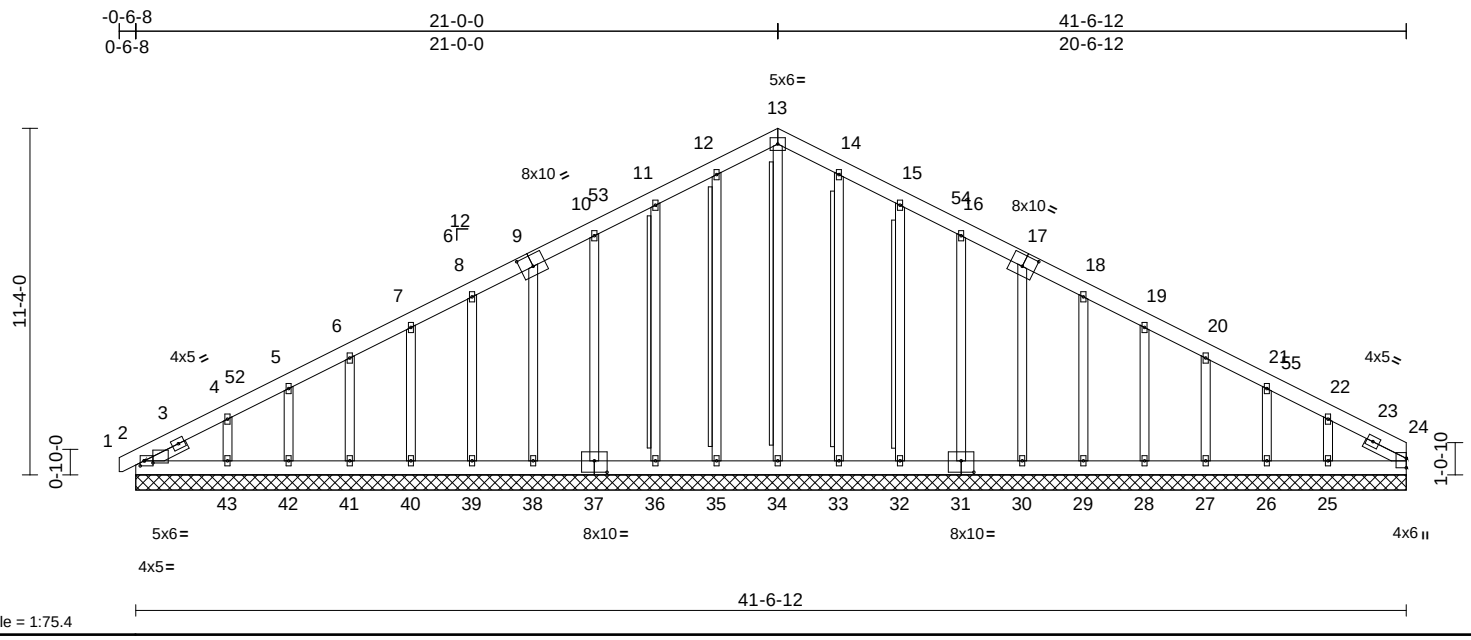

Plate Offsets (X, Y): [2:0-1-9,0-2-0], [2:0-3-7,0-0-13], [9:0-5-0,0-4-8], [17:0-5-0,0-4-8], [31:0-5-0,0-4-8], [37:0-5-0,0-4-8]

Loading	(psf)	Spacing	2-0-0	CSI		DEFL	in	(loc)	l/defl	L/d	PLATES	GRIP
TCLL (roof)	20.0	Plate Grip DOL	1.15	TC	0.06	Vert(LL)	n/a	-	n/a	999	MT20	244/190
Snow (Pf)	20.0	Lumber DOL	1.15	BC	0.05	Vert(CT)	n/a	-	n/a	999		
TCDL	10.0	Rep Stress Incr	YES	WB	0.17	Horz(CT)	0.01	24	n/a	n/a		
BCLL	0.0*	Code	IRC2018/TPI2014	Matrix-MSH								
BCDL	10.0										Weight: 373 lb	FT = 20%

LUMBER
TOP CHORD 2x6 SP No.2
BOT CHORD 2x6 SP No.2
OTHERS 2x4 SP No.3 *Except*
34-13,0-0,0-0,0-0,0-0:2x4 SP No.2
SLIDER Left 2x4 SP No.3 -- 1-6-0, Right 2x4 SP No.3 -- 1-6-0

BRACING
TOP CHORD Structural wood sheathing directly applied or 6-0-0 oc purlins.
BOT CHORD Rigid ceiling directly applied or 10-0-0 oc bracing.
WEBS T-Brace: 2x4 SP No.2 - 12-35, 11-36, 14-33, 15-32, 13-34
Fasten (2X) T and I braces to narrow edge of web with 10d (0.131"x3") nails, 6in o.c.,with 3in minimum end distance.
Brace must cover 90% of web length.

REACTIONS (size) 2=41-6-12, 24=41-6-12, 25=41-6-12, 26=41-6-12, 27=41-6-12, 28=41-6-12, 29=41-6-12, 30=41-6-12, 31=41-6-12, 32=41-6-12, 33=41-6-12, 34=41-6-12, 35=41-6-12, 36=41-6-12, 37=41-6-12, 38=41-6-12, 39=41-6-12, 40=41-6-12, 41=41-6-12, 42=41-6-12, 43=41-6-12, 44=41-6-12, 48=41-6-12
Max Horiz 2=179 (LC 14), 44=179 (LC 14)
Max Uplift 2=-11 (LC 15), 25=-111 (LC 15), 26=-25 (LC 15), 27=-48 (LC 15), 28=-43 (LC 15), 29=-41 (LC 15), 30=-44 (LC 15), 31=-46 (LC 15), 32=-53 (LC 15), 33=-15 (LC 15), 35=-23 (LC 14), 36=-51 (LC 14), 37=-46 (LC 14), 38=-44 (LC 14), 39=-41 (LC 14), 40=-43 (LC 14), 41=-48 (LC 14), 42=-23 (LC 14), 43=-108 (LC 14), 44=-11 (LC 15)
Max Grav 2=168 (LC 26), 24=127 (LC 27), 25=208 (LC 35), 26=147 (LC 22), 27=163 (LC 35), 28=160 (LC 22), 29=156 (LC 1), 30=160 (LC 35), 31=190 (LC 22), 32=236 (LC 22), 33=237 (LC 22), 34=183 (LC 27), 35=235 (LC 21), 36=232 (LC 21), 37=185 (LC 21), 38=160 (LC 34), 39=156 (LC 1), 40=159 (LC 21), 41=166 (LC 34), 42=135 (LC 1), 43=237 (LC 34), 44=168 (LC 26), 48=127 (LC 27)

FORCES (lb) - Maximum Compression/Maximum Tension
TOP CHORD 1-2=0/13, 2-4=-216/76, 4-5=-160/78, 5-6=-126/91, 6-7=-104/111, 7-8=-82/134, 8-10=-77/183, 10-11=-95/230, 11-12=-116/279, 12-13=-127/308, 13-14=-127/308, 14-15=-116/279, 15-16=-95/229, 16-18=-77/183, 18-19=-55/95, 19-20=-56/49, 20-21=-76/24, 21-22=-97/21, 22-24=-149/50
BOT CHORD 2-43=-46/150, 42-43=-46/150, 41-42=-46/150, 40-41=-46/150, 39-40=-46/150, 38-39=-46/150, 36-38=-46/152, 35-36=-46/152, 34-35=-46/152, 33-34=-46/152, 32-33=-46/152, 30-32=-46/152, 29-30=-46/150, 28-29=-46/150, 27-28=-46/150, 26-27=-46/150, 25-26=-46/150, 24-25=-46/150
WEBS 12-35=-195/47, 11-36=-192/89, 10-37=-145/80, 9-38=-120/77, 8-39=-116/74, 7-40=-121/78, 6-41=-122/79, 5-42=-110/66, 4-43=-156/155, 14-33=-197/39, 15-32=-196/89, 16-31=-150/80, 17-30=-120/77, 18-29=-116/74, 19-28=-121/78, 20-27=-121/77, 21-26=-115/79, 22-25=-142/171, 13-34=-173/38

NOTES
1) Unbalanced roof live loads have been considered for this design.

November 27,2024

Continued on page 2

WARNING - Verify design parameters and READ NOTES ON THIS AND INCLUDED MITEK REFERENCE PAGE MII-7473 rev. 1/2/2023 BEFORE USE.
Design valid for use only with MiTek® connectors. This design is based only upon parameters shown, and is for an individual building component, not a truss system. Before use, the building designer must verify the applicability of design parameters and properly incorporate this design into the overall building design. Bracing indicated is to prevent buckling of individual truss web and/or chord members only. Additional temporary and permanent bracing is always required for stability and to prevent collapse with possible personal injury and property damage. For general guidance regarding the fabrication, storage, delivery, erection and bracing of trusses and truss systems, see **ANSI/TPI1 Quality Criteria and DSB-22** available from Truss Plate Institute (www.tpinst.org) and **BCSI Building Component Safety Information** available from the Structural Building Component Association (www.sbcacomponents.com)

ENGINEERING BY TRENCO A MiTek Affiliate
818 Soundside Road
Edenton, NC 27932

2) Wind: ASCE 7-16; Vult=130mph (3-second gust) Vasd=103mph; TCDL=6.0psf; BCDL=6.0psf; h=25ft; Cat. II; Exp B; Enclosed; MWFRS (envelope) exterior zone and C-C Corner(3E) -0-5-14 to 3-8-2, Exterior(2N) 3-8-2 to 16-10-1, Corner(3R) 16-10-1 to 25-0-0, Exterior(2N) 25-0-0 to 37-4-13, Corner(3E) 37-4-13 to 41-6-12 zone; cantilever left and right exposed ; end vertical left and right exposed;C-C for members and forces & MWFRS for reactions shown; Lumber DOL=1.60 plate grip DOL=1.60
3) Truss designed for wind loads in the plane of the truss only. For studs exposed to wind (normal to the face), see Standard Industry Gable End Details as applicable, or consult qualified building designer as per ANSI/TPI 1.
4) TCLL: ASCE 7-16; Pr=20.0 psf (roof LL: Lum DOL=1.15 Plate DOL=1.15); Pf=20.0 psf (Lum DOL=1.15 Plate DOL=1.15); Is=1.0; Rough Cat B; Fully Exp.; Ce=0.9; Cs=1.00; Ct=1.10
5) Unbalanced snow loads have been considered for this design.
6) This truss has been designed for greater of min roof live load of 12.0 psf or 1.00 times flat roof load of 20.0 psf on overhangs non-concurrent with other live loads.
7) All plates are 2x4 MT20 unless otherwise indicated.
8) Gable requires continuous bottom chord bearing.
9) Gable studs spaced at 2-0-0 oc.
10) This truss has been designed for a 10.0 psf bottom chord live load nonconcurrent with any other live loads.
11) * This truss has been designed for a live load of 20.0psf on the bottom chord in all areas where a rectangle 3-06-00 tall by 2-00-00 wide will fit between the bottom chord and any other members.
12) One H2.5A Simpson Strong-Tie connectors recommended to connect truss to bearing walls due to UPLIFT at jt(s) 2, 35, 36, 37, 38, 39, 40, 41, 42, 43, 33, 32, 31, 30, 29, 28, 27, 26, and 25. This connection is for uplift only and does not consider lateral forces.
13) This truss is designed in accordance with the 2018 International Residential Code sections R502.11.1 and R802.10.2 and referenced standard ANSI/TPI 1.
14) Warning: Additional permanent and stability bracing for truss system (not part of this component design) is always required.

LOAD CASE(S) Standard

WARNING - Verify design parameters and READ NOTES ON THIS AND INCLUDED MITEK REFERENCE PAGE MII-7473 rev. 1/2/2023 BEFORE USE.
Design valid for use only with MiTek® connectors. This design is based only upon parameters shown, and is for an individual building component, not a truss system. Before use, the building designer must verify the applicability of design parameters and properly incorporate this design into the overall building design. Bracing indicated is to prevent buckling of individual truss web and/or chord members only. Additional temporary and permanent bracing is always required for stability and to prevent collapse with possible personal injury and property damage. For general guidance regarding the fabrication, storage, delivery, erection and bracing of trusses and truss systems, see **ANSI/TPI1 Quality Criteria and DSB-22** available from Truss Plate Institute (www.tpinst.org) and **BCSI Building Component Safety Information** available from the Structural Building Component Association (www.sbcacomponents.com)

ENGINEERING BY TRENCO A MiTek Affiliate
818 Soundside Road
Edenton, NC 27932

Job	Truss	Truss Type	Qty	Ply	12 Mason Ridge - Wilmington B - Roof
25070038	B01	Hip Supported Gable	1	1	I69852583 Job Reference (optional)

Carter Components (Sanford, NC), Sanford, NC - 27332, Run: 8.73 S Oct 31 2024 Print: 8.730 S Oct 31 2024 MiTek Industries, Inc. Tue Nov 26 10:11:42 Page: 1

ID:3svb5hhSXbq1LmTDC3xnuAzwPrT-RfC?PsB70Hq3NSgPqnL8w3uITXbGKWrCDoi7J4zJC?f

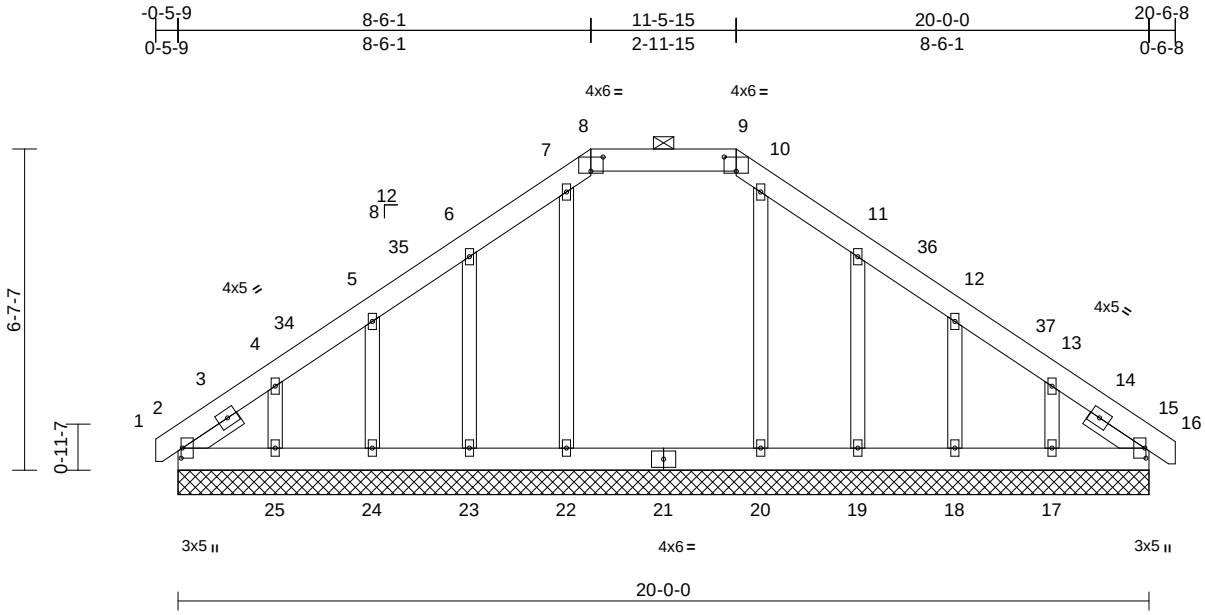

Scale = 1:47.5

Plate Offsets (X, Y): [2:0-2-8,0-0-5], [4:0-0-0,Edge], [5:0-0-0,Edge], [6:0-0-0,Edge], [7:0-0-0,Edge], [8:0-3-0,0-3-8], [9:0-3-0,0-3-8], [15:0-2-8,0-0-5]

Loading	(psf)	Spacing	2-0-0	CSI		DEFL	in	(loc)	l/defl	L/d	PLATES	GRIP
TCLL (roof)	20.0	Plate Grip DOL	1.15	TC	0.09	Vert(LL)	n/a	-	n/a	999	MT20	244/190
Snow (Pf)	20.0	Lumber DOL	1.15	BC	0.06	Vert(CT)	n/a	-	n/a	999		
TCDL	10.0	Rep Stress Incr	YES	WB	0.14	Horz(CT)	0.00	15	n/a	n/a		
BCLL	0.0*	Code	IRC2018/TPI2014	Matrix-MSH								
BCDL	10.0										Weight: 150 lb	FT = 20%

LUMBER

TOP CHORD 2x6 SP No.2
BOT CHORD 2x6 SP No.2
OTHERS 2x4 SP No.3
SLIDER Left 2x4 SP No.3 -- 1-4-2, Right 2x4 SP No.3 -- 1-4-2

BRACING

TOP CHORD Structural wood sheathing directly applied or 6-0-0 oc purlins, except 2-0-0 oc purlins (6-0-0 max.): 8-9.
BOT CHORD Rigid ceiling directly applied or 10-0-0 oc bracing.

REACTIONS (size) 2=20-0-0, 15=20-0-0, 17=20-0-0, 18=20-0-0, 19=20-0-0, 20=20-0-0, 22=20-0-0, 23=20-0-0, 24=20-0-0, 25=20-0-0, 26=20-0-0, 30=20-0-0
Max Horiz 2=-141 (LC 12), 26=-141 (LC 12)
Max Uplift 2=-50 (LC 10), 15=-19 (LC 11), 17=-99 (LC 15), 18=-47 (LC 15), 19=-81 (LC 15), 22=-7 (LC 11), 23=-78 (LC 14), 24=-46 (LC 14), 25=-106 (LC 14), 26=-50 (LC 10), 30=-19 (LC 11)
Max Grav 2=173 (LC 27), 15=176 (LC 22), 17=271 (LC 53), 18=251 (LC 53), 19=224 (LC 53), 20=346 (LC 6), 22=346 (LC 5), 23=221 (LC 51), 24=249 (LC 51), 25=281 (LC 51), 26=173 (LC 27), 30=176 (LC 22)

FORCES (lb) - Maximum Compression/Maximum Tension

TOP CHORD 1-2=0/13, 2-4=-161/114, 4-5=-134/94, 5-6=-141/91, 6-7=-144/145, 7-8=-191/145, 8-9=-128/151, 9-10=-191/145, 10-11=-144/145, 11-12=-141/78, 12-13=-134/54, 13-15=-139/70, 15-16=0/16
BOT CHORD 2-25=-56/128, 24-25=-56/128, 23-24=-56/128, 22-23=-56/128, 20-22=-56/128, 19-20=-56/128, 18-19=-56/128, 17-18=-56/128, 15-17=-56/128
WEBS 10-20=-229/23, 11-19=-194/99, 12-18=-194/87, 13-17=-186/109, 7-22=-229/49, 6-23=-194/99, 5-24=-194/87, 4-25=-186/110

NOTES

1) Unbalanced roof live loads have been considered for this design.
2) Wind: ASCE 7-16; Vult=130mph (3-second gust) Vasd=103mph; TCDL=6.0psf; BCDL=6.0psf; h=25ft; Cat. II; Exp B; Enclosed; MWFRS (envelope) exterior zone and C-C Corner(3E) -0-4-11 to 2-7-5, Exterior(2N) 2-7-5 to 5-6-1, Corner(3R) 5-6-1 to 14-5-15, Exterior(2N) 14-5-15 to 17-5-10, Corner(3E) 17-5-10 to 20-5-10 zone; cantilever left and right exposed ; end vertical left and right exposed;C-C for members and forces & MWFRS for reactions shown; Lumber DOL=1.60 plate grip DOL=1.60
3) Truss designed for wind loads in the plane of the truss only. For studs exposed to wind (normal to the face), see Standard Industry Gable End Details as applicable, or consult qualified building designer as per ANSI/TPI 1.
4) TCLL: ASCE 7-16; Pr=20.0 psf (roof LL: Lum DOL=1.15 Plate DOL=1.15); Pf=20.0 psf (Lum DOL=1.15 Plate DOL=1.15); Is=1.0; Rough Cat B; Fully Exp.; Ce=0.9; Cs=1.00; Ct=1.10
5) Unbalanced snow loads have been considered for this design.
6) This truss has been designed for greater of min roof live load of 12.0 psf or 1.00 times flat roof load of 20.0 psf on overhangs non-concurrent with other live loads.
7) Provide adequate drainage to prevent water ponding.
8) All plates are 2x4 MT20 unless otherwise indicated.
9) Gable requires continuous bottom chord bearing.
10) Gable studs spaced at 2-0-0 oc.
11) This truss has been designed for a 10.0 psf bottom chord live load nonconcurrent with any other live loads.
12) * This truss has been designed for a live load of 20.0psf on the bottom chord in all areas where a rectangle 3-06-00 tall by 2-00-00 wide will fit between the bottom chord and any other members, with BCDL = 10.0psf.
13) Provide mechanical connection (by others) of truss to bearing plate capable of withstanding 50 lb uplift at joint 2, 19 lb uplift at joint 15, 81 lb uplift at joint 19, 47 lb uplift at joint 18, 99 lb uplift at joint 17, 7 lb uplift at joint 22, 78 lb uplift at joint 23, 46 lb uplift at joint 24, 106 lb uplift at joint 25, 50 lb uplift at joint 2 and 19 lb uplift at joint 15.
14) This truss is designed in accordance with the 2018 International Residential Code sections R502.11.1 and R802.10.2 and referenced standard ANSI/TPI 1.
15) Graphical purlin representation does not depict the size or the orientation of the purlin along the top and/or bottom chord.

LOAD CASE(S) Standard

November 27,2024

WARNING - Verify design parameters and READ NOTES ON THIS AND INCLUDED MITEK REFERENCE PAGE MII-7473 rev. 1/2/2023 BEFORE USE.
Design valid for use only with MiTek® connectors. This design is based only upon parameters shown, and is for an individual building component, not a truss system. Before use, the building designer must verify the applicability of design parameters and properly incorporate this design into the overall building design. Bracing indicated is to prevent buckling of individual truss web and/or chord members only. Additional temporary and permanent bracing is always required for stability and to prevent collapse with possible personal injury and property damage. For general guidance regarding the fabrication, storage, delivery, erection and bracing of trusses and truss systems, see **ANSI/TPI1 Quality Criteria and DSB-22** available from Truss Plate Institute (www.tpinst.org) and **BCSI Building Component Safety Information** available from the Structural Building Component Association (www.sbcacomponents.com)

ENGINEERING BY TRENCO A MiTek Affiliate
818 Soundside Road
Edenton, NC 27932

Job	Truss	Truss Type	Qty	Ply	12 Mason Ridge - Wilmington B - Roof
25070038	B02	Common Girder	1	2	I69852584 Job Reference (optional)

Carter Components (Sanford, NC), Sanford, NC - 27332, Run: 8.73 S Oct 31 2024 Print: 8.730 S Oct 31 2024 MiTek Industries, Inc. Tue Nov 26 10:11:42 Page: 1
ID:PTv5C6IkKROx2GY0tKS8s4zvUAt-RfC?PsB70Hq3NSgPqnL8w3uITXbGKWrCDoi7J4zJC?f

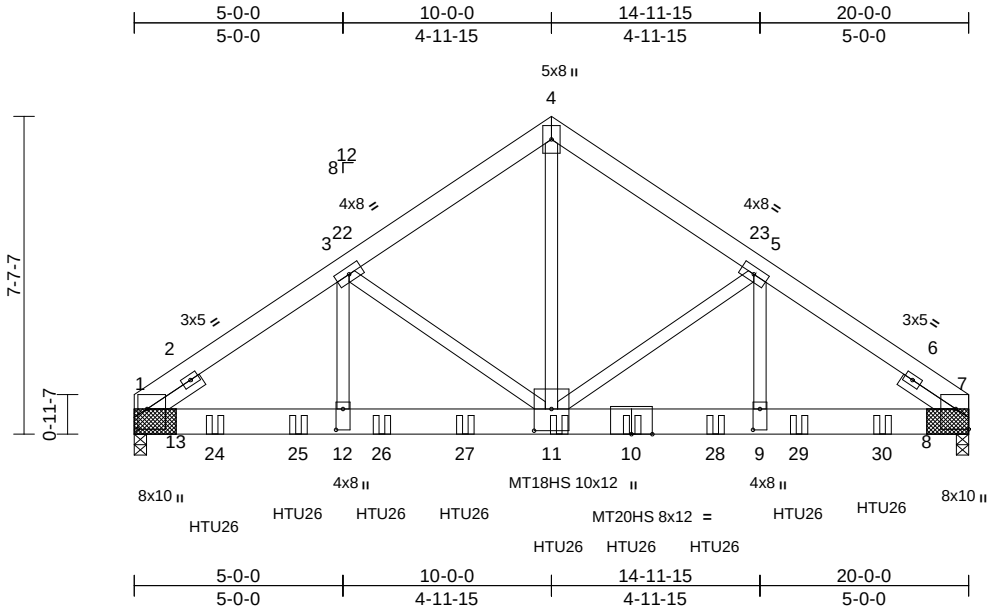

Plate Offsets (X, Y): [1:0-5-13,0-2-11], [7:Edge,0-3-11], [9:0-6-0,0-2-0], [11:0-6-4,0-5-0], [12:0-6-0,0-2-0]

Loading	(psf)	Spacing	2-0-0	CSI		DEFL	in	(loc)	l/defl	L/d	PLATES	GRIP
TCLL (roof)	20.0	Plate Grip DOL	1.15	TC	0.69	Vert(LL)	-0.13	11-12	>999	240	MT20	244/190
Snow (Pf)	20.0	Lumber DOL	1.15	BC	0.53	Vert(CT)	-0.25	11-12	>937	180	MT20HS	187/143
TCDL	10.0	Rep Stress Incr	NO	WB	0.86	Horz(CT)	0.06	7	n/a	n/a	MT18HS	244/190
BCLL	0.0*	Code	IRC2018/TPI2014	Matrix-MSH								
BCDL	10.0										Weight: 344 lb	FT = 20%

LUMBER

TOP CHORD 2x6 SP No.2
BOT CHORD 2x8 SP 2400F 2.0E
WEBS 2x4 SP No.3 *Except* 11-4:2x4 SP No.1
SLIDER Left 2x4 SP No.3 -- 1-6-0, Right 2x4 SP No.3 -- 1-6-0

BRACING

TOP CHORD Structural wood sheathing directly applied or 3-6-1 oc purlins.
BOT CHORD Rigid ceiling directly applied or 10-0-0 oc bracing.

REACTIONS (size) 1=(0-3-8 + bearing block), (req. 0-4-3), 7=(0-3-8 + bearing block), (req. 0-3-14)
Max Horiz 1=-154 (LC 10)
Max Grav 1=10077 (LC 5), 7=9322 (LC 6)

FORCES (lb) - Maximum Compression/Maximum Tension
TOP CHORD 1-3=-12931/0, 3-4=-9407/0, 4-5=-9408/0, 5-7=-12232/0
BOT CHORD 1-12=0/10578, 11-12=0/10578, 9-11=0/9996, 7-9=0/9996
WEBS 4-11=0/9840, 5-11=-2708/775, 5-9=-611/3269, 3-11=-3434/0, 3-12=0/4090

NOTES

1) 2-ply truss to be connected together with 10d (0.131"x3") nails as follows:
Top chords connected as follows: 2x6 - 2 rows staggered at 0-9-0 oc.
Bottom chords connected as follows: 2x8 - 2 rows staggered at 0-5-0 oc.
Web connected as follows: 2x4 - 1 row at 0-9-0 oc, Except member 4-11 2x4 - 1 row at 0-7-0 oc.
2) All loads are considered equally applied to all plies, except if noted as front (F) or back (B) face in the LOAD CASE(S) section. Ply to ply connections have been provided to distribute only loads noted as (F) or (B), unless otherwise indicated.
3) 2x8 SP 2400F 2.0E bearing block 12" long at jt. 1 attached to each face with 4 rows of 10d (0.131"x3") nails spaced 3" o.c. 16 Total fasteners per block. Bearing is assumed to be SP 2400F 2.0E.
4) 2x8 SP 2400F 2.0E bearing block 12" long at jt. 7 attached to each face with 4 rows of 10d (0.131"x3") nails spaced 3" o.c. 16 Total fasteners per block. Bearing is assumed to be SP 2400F 2.0E.
5) Unbalanced roof live loads have been considered for this design.
6) Wind: ASCE 7-16; Vult=130mph (3-second gust) Vasd=103mph; TCDL=6.0psf; BCDL=6.0psf; h=25ft; Cat. II; Exp B; Enclosed; MWFRS (envelope) exterior zone; cantilever left and right exposed ; end vertical left and right exposed; Lumber DOL=1.60 plate grip DOL=1.60
7) TCLL: ASCE 7-16; Pr=20.0 psf (roof LL: Lum DOL=1.15 Plate DOL=1.15); Pf=20.0 psf (Lum DOL=1.15 Plate DOL=1.15); Is=1.0; Rough Cat B; Fully Exp.; Ce=0.9; Cs=1.00; Ct=1.10
8) Unbalanced snow loads have been considered for this design.
9) All plates are MT20 plates unless otherwise indicated.
10) The Fabrication Tolerance at joint 11 = 12%
11) This truss has been designed for a 10.0 psf bottom chord live load nonconcurrent with any other live loads.
12) * This truss has been designed for a live load of 20.0psf on the bottom chord in all areas where a rectangle 3-06-00 tall by 2-00-00 wide will fit between the bottom chord and any other members.
13) This truss is designed in accordance with the 2018 International Residential Code sections R502.11.1 and R802.10.2 and referenced standard ANSI/TPI 1.
14) Use Simpson Strong-Tie HTU26 (20-10d Girder, 14-10dx1 1/2 Truss, Single Ply Girder) or equivalent spaced at 2-3-0 oc max. starting at 1-11-3 from the left end to 10-2-3 to connect truss(es) to back face of bottom chord.
15) Use Simpson Strong-Tie HTU26 (10-16d Girder, 14-10dx1 1/2 Truss) or equivalent spaced at 2-0-0 oc max. starting at 11-11-3 from the left end to 17-11-3 to connect truss(es) to back face of bottom chord.
16) Fill all nail holes where hanger is in contact with lumber.

LOAD CASE(S) Standard

1) Dead + Snow (balanced): Lumber Increase=1.15, Plate Increase=1.15
Uniform Loads (lb/ft)
Vert: 1-4=-60, 4-7=-60, 14-18=-20
Concentrated Loads (lb)
Vert: 10=-1642 (B), 11=-1851 (B), 24=-1851 (B), 25=-1851 (B), 26=-1851 (B), 27=-1851 (B), 28=-1642 (B), 29=-1642 (B), 30=-1642 (B)

November 27,2024

WARNING - Verify design parameters and READ NOTES ON THIS AND INCLUDED MITEK REFERENCE PAGE MII-7473 rev. 1/2/2023 BEFORE USE.
Design valid for use only with MiTek® connectors. This design is based only upon parameters shown, and is for an individual building component, not a truss system. Before use, the building designer must verify the applicability of design parameters and properly incorporate this design into the overall building design. Bracing indicated is to prevent buckling of individual truss web and/or chord members only. Additional temporary and permanent bracing is always required for stability and to prevent collapse with possible personal injury and property damage. For general guidance regarding the fabrication, storage, delivery, erection and bracing of trusses and truss systems, see **ANSI/TPI1 Quality Criteria and DSB-22** available from Truss Plate Institute (www.tpinst.org) and **BCSI Building Component Safety Information** available from the Structural Building Component Association (www.sbcacomponents.com)

ENGINEERING BY TRENCO A MiTek Affiliate
818 Soundside Road
Edenton, NC 27932

Job	Truss	Truss Type	Qty	Ply	12 Mason Ridge - Wilmington B - Roof
25070038	C01	Monopitch Supported Gable	2	1	I69852585 Job Reference (optional)

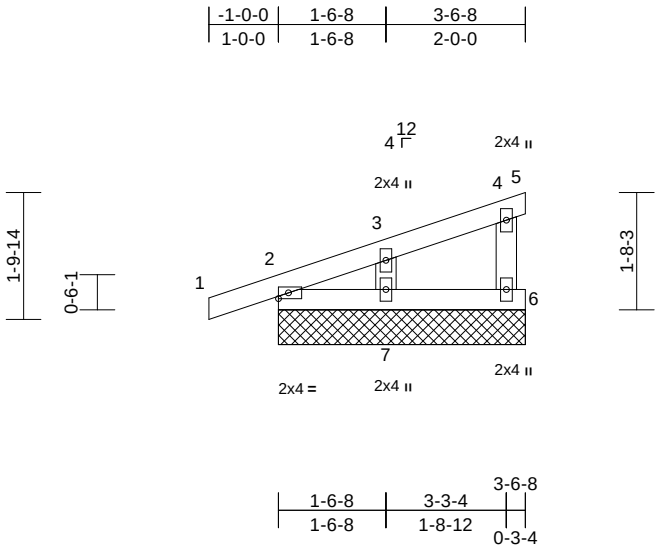

Scale = 1:33.1

Loading	(psf)	Spacing	2-0-0	CSI		DEFL	in	(loc)	l/defl	L/d	PLATES	GRIP
TCLL (roof)	20.0	Plate Grip DOL	1.15	TC	0.10	Vert(LL)	n/a	-	n/a	999	MT20	244/190
Snow (Pf)	20.0	Lumber DOL	1.15	BC	0.02	Vert(CT)	n/a	-	n/a	999		
TCDL	10.0	Rep Stress Incr	YES	WB	0.04	Horz(CT)	0.00	5	n/a	n/a		
BCLL	0.0*	Code	IRC2018/TPI2014	Matrix-MP								
BCDL	10.0										Weight: 15 lb	FT = 20%

LUMBER
TOP CHORD 2x4 SP No.2
BOT CHORD 2x4 SP No.2
WEBS 2x4 SP No.3

BRACING
TOP CHORD Structural wood sheathing directly applied or 3-6-8 oc purlins, except end verticals.
BOT CHORD Rigid ceiling directly applied or 10-0-0 oc bracing.

REACTIONS (size) 2=3-6-8, 5=3-6-8, 6=3-6-8, 7=3-6-8, 8=3-6-8
Max Horiz 2=60 (LC 10), 8=60 (LC 10)
Max Uplift 2=-40 (LC 10), 5=-36 (LC 21), 6=-35 (LC 10), 7=-30 (LC 14), 8=-40 (LC 10)
Max Grav 2=184 (LC 21), 5=11 (LC 10), 6=147 (LC 21), 7=169 (LC 21), 8=184 (LC 21)

FORCES (lb) - Maximum Compression/Maximum Tension
TOP CHORD 1-2=0/28, 2-3=-119/75, 3-4=-39/23, 4-5=-19/11, 4-6=-132/136
BOT CHORD 2-7=-36/22, 6-7=0/0
WEBS 3-7=-139/149

NOTES
1) Wind: ASCE 7-16; Vult=130mph (3-second gust) Vasd=103mph; TCDL=6.0psf; BCDL=6.0psf; h=25ft; Cat. II; Exp B; Enclosed; MWFRS (envelope) exterior zone and C-C Corner(3E) -1-0-0 to 2-0-0, Exterior(2N) 2-0-0 to 3-6-8 zone; cantilever left and right exposed ; end vertical left exposed;C-C for members and forces & MWFRS for reactions shown; Lumber DOL=1.60 plate grip DOL=1.60
2) Truss designed for wind loads in the plane of the truss only. For studs exposed to wind (normal to the face), see Standard Industry Gable End Details as applicable, or consult qualified building designer as per ANSI/TPI 1.
3) TCLL: ASCE 7-16; Pr=20.0 psf (roof LL: Lum DOL=1.15 Plate DOL=1.15); Pf=20.0 psf (Lum DOL=1.15 Plate DOL=1.15); Is=1.0; Rough Cat B; Fully Exp.; Ce=0.9; Cs=1.00; Ct=1.10
4) Unbalanced snow loads have been considered for this design.
5) This truss has been designed for greater of min roof live load of 12.0 psf or 1.00 times flat roof load of 20.0 psf on overhangs non-concurrent with other live loads.
6) Gable requires continuous bottom chord bearing.
7) Gable studs spaced at 2-0-0 oc.
8) This truss has been designed for a 10.0 psf bottom chord live load nonconcurrent with any other live loads.
9) * This truss has been designed for a live load of 20.0psf on the bottom chord in all areas where a rectangle 3-06-00 tall by 2-00-00 wide will fit between the bottom chord and any other members.
10) Provide mechanical connection (by others) of truss to bearing plate capable of withstanding 40 lb uplift at joint 2, 36 lb uplift at joint 5, 35 lb uplift at joint 6, 30 lb uplift at joint 7 and 40 lb uplift at joint 2.
11) This truss is designed in accordance with the 2018 International Residential Code sections R502.11.1 and R802.10.2 and referenced standard ANSI/TPI 1.

LOAD CASE(S) Standard

November 27,2024

WARNING - Verify design parameters and READ NOTES ON THIS AND INCLUDED MITEK REFERENCE PAGE MII-7473 rev. 1/2/2023 BEFORE USE.
Design valid for use only with MiTek® connectors. This design is based only upon parameters shown, and is for an individual building component, not a truss system. Before use, the building designer must verify the applicability of design parameters and properly incorporate this design into the overall building design. Bracing indicated is to prevent buckling of individual truss web and/or chord members only. Additional temporary and permanent bracing is always required for stability and to prevent collapse with possible personal injury and property damage. For general guidance regarding the fabrication, storage, delivery, erection and bracing of trusses and truss systems, see **ANSI/TPI1 Quality Criteria and DSB-22** available from Truss Plate Institute (www.tpinst.org) and **BCSI Building Component Safety Information** available from the Structural Building Component Association (www.sbcacomponents.com)

ENGINEERING BY TRENCO A MiTek Affiliate
818 Soundside Road
Edenton, NC 27932

Job	Truss	Truss Type	Qty	Ply	12 Mason Ridge - Wilmington B - Roof
25070038	C02	Monopitch	8	1	I69852586 Job Reference (optional)

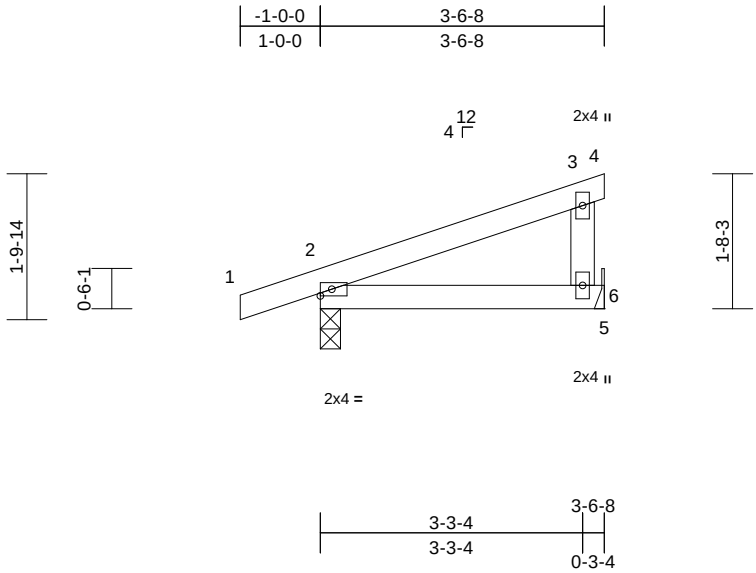

Scale = 1:28.7

Loading	(psf)	Spacing	2-0-0	CSI		DEFL	in	(loc)	l/defl	L/d	PLATES	GRIP
TCLL (roof)	20.0	Plate Grip DOL	1.15	TC	0.19	Vert(LL)	0.02	6-9	>999	240	MT20	244/190
Snow (Pf)	20.0	Lumber DOL	1.15	BC	0.18	Vert(CT)	0.02	6-9	>999	180		
TCDL	10.0	Rep Stress Incr	YES	WB	0.00	Horz(CT)	0.00	2	n/a	n/a		
BCLL	0.0*	Code	IRC2018/TPI2014	Matrix-MP								
BCDL	10.0										Weight: 14 lb	FT = 20%

LUMBER
TOP CHORD 2x4 SP No.2
BOT CHORD 2x4 SP No.2
WEBS 2x4 SP No.3

BRACING
TOP CHORD Structural wood sheathing directly applied or 3-6-8 oc purlins, except end verticals.
BOT CHORD Rigid ceiling directly applied or 10-0-0 oc bracing.

REACTIONS (size) 2=0-3-0, 6= Mechanical
Max Horiz 2=59 (LC 10)
Max Uplift 2=-81 (LC 10), 6=-56 (LC 10)
Max Grav 2=276 (LC 21), 6=193 (LC 21)

FORCES (lb) - Maximum Compression/Maximum Tension
TOP CHORD 1-2=0/28, 2-3=-50/86, 3-4=-8/0, 3-6=-144/121
BOT CHORD 2-6=-54/50, 5-6=0/0

NOTES
1) Wind: ASCE 7-16; Vult=130mph (3-second gust) Vasd=103mph; TCDL=6.0psf; BCDL=6.0psf; h=25ft; Cat. II; Exp B; Enclosed; MWFRS (envelope) exterior zone and C-C Exterior(2E) zone; cantilever left and right exposed ; end vertical left exposed; porch left and right exposed;C-C for members and forces & MWFRS for reactions shown; Lumber DOL=1.60 plate grip DOL=1.60
2) TCLL: ASCE 7-16; Pr=20.0 psf (roof LL: Lum DOL=1.15 Plate DOL=1.15); Pf=20.0 psf (Lum DOL=1.15 Plate DOL=1.15); Is=1.0; Rough Cat B; Fully Exp.; Ce=0.9; Cs=1.00; Ct=1.10
3) Unbalanced snow loads have been considered for this design.
4) This truss has been designed for greater of min roof live load of 12.0 psf or 1.00 times flat roof load of 20.0 psf on overhangs non-concurrent with other live loads.
5) This truss has been designed for a 10.0 psf bottom chord live load nonconcurrent with any other live loads.
6) * This truss has been designed for a live load of 20.0psf on the bottom chord in all areas where a rectangle 3-06-00 tall by 2-00-00 wide will fit between the bottom chord and any other members.
7) Refer to girder(s) for truss to truss connections.
8) Provide mechanical connection (by others) of truss to bearing plate capable of withstanding 56 lb uplift at joint 6.
9) One H2.5A Simpson Strong-Tie connectors recommended to connect truss to bearing walls due to UPLIFT at jt(s) 2. This connection is for uplift only and does not consider lateral forces.
10) This truss is designed in accordance with the 2018 International Residential Code sections R502.11.1 and R802.10.2 and referenced standard ANSI/TPI 1.

LOAD CASE(S) Standard

November 27,2024

WARNING - Verify design parameters and READ NOTES ON THIS AND INCLUDED MITEK REFERENCE PAGE MII-7473 rev. 1/2/2023 BEFORE USE.
Design valid for use only with MiTek® connectors. This design is based only upon parameters shown, and is for an individual building component, not a truss system. Before use, the building designer must verify the applicability of design parameters and properly incorporate this design into the overall building design. Bracing indicated is to prevent buckling of individual truss web and/or chord members only. Additional temporary and permanent bracing is always required for stability and to prevent collapse with possible personal injury and property damage. For general guidance regarding the fabrication, storage, delivery, erection and bracing of trusses and truss systems, see **ANSI/TPI1 Quality Criteria and DSB-22** available from Truss Plate Institute (www.tpinst.org) and **BCSI Building Component Safety Information** available from the Structural Building Component Association (www.sbcacomponents.com)

ENGINEERING BY TRENCO A MiTek Affiliate
818 Soundside Road
Edenton, NC 27932

Job	Truss	Truss Type	Qty	Ply	12 Mason Ridge - Wilmington B - Roof
25070038	D01	Common Supported Gable	1	1	I69852587 Job Reference (optional)

Carter Components (Sanford, NC), Sanford, NC - 27332,

Run: 8.73 S Oct 31 2024 Print: 8.730 S Oct 31 2024 MiTek Industries, Inc. Tue Nov 26 10:11:43 Page: 1
ID:fIG?DolQzsmG5QC5xg?Krkz4Siq-RfC?PsB70Hq3NSgPqnL8w3uITXbGKWrCDoi7J4zJC?f

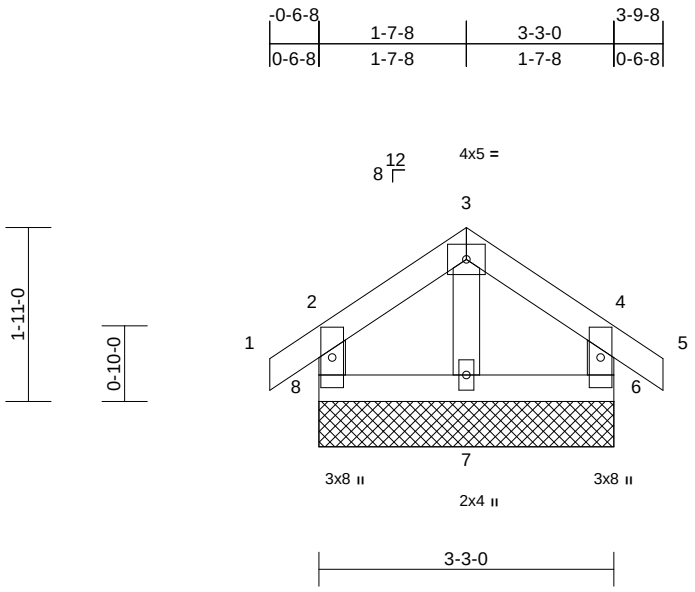

Scale = 1:25.4

Loading	(psf)	Spacing	1-11-4	CSI		DEFL	in	(loc)	l/defl	L/d	PLATES	GRIP
TCLL (roof)	20.0	Plate Grip DOL	1.15	TC	0.07	Vert(LL)	n/a	-	n/a	999	MT20	244/190
Snow (Pf)	20.0	Lumber DOL	1.15	BC	0.02	Vert(CT)	n/a	-	n/a	999		
TCDL	10.0	Rep Stress Incr	YES	WB	0.01	Horz(CT)	0.00	6	n/a	n/a		
BCLL	0.0*	Code	IRC2018/TPI2014	Matrix-MR								
BCDL	10.0										Weight: 16 lb	FT = 20%

LUMBER

TOP CHORD	2x4 SP No.2
BOT CHORD	2x4 SP No.2
WEBS	2x4 SP No.3
OTHERS	2x4 SP No.3

BRACING

TOP CHORD	Structural wood sheathing directly applied or 3-3-0 oc purlins, except end verticals.
BOT CHORD	Rigid ceiling directly applied or 6-0-0 oc bracing.

REACTIONS (size) 6=3-3-0, 7=3-3-0, 8=3-3-0
Max Horiz 8=-53 (LC 12)
Max Uplift 6=-34 (LC 15), 8=-34 (LC 14)
Max Grav 6=145 (LC 22), 7=102 (LC 1), 8=145 (LC 21)

FORCES (lb) - Maximum Compression/Maximum Tension

TOP CHORD	2-8=-133/169, 1-2=0/32, 2-3=-44/94, 3-4=-44/91, 4-5=0/32, 4-6=-133/164
BOT CHORD	7-8=-24/44, 6-7=-24/44
WEBS	3-7=-77/0

NOTES

1) Unbalanced roof live loads have been considered for this design.
2) Wind: ASCE 7-16; Vult=130mph (3-second gust) Vasd=103mph; TCDL=6.0psf; BCDL=6.0psf; h=25ft; Cat. II; Exp B; Enclosed; MWFRS (envelope) exterior zone and C-C Corner(3E) zone; cantilever left and right exposed ; end vertical left and right exposed;C-C for members and forces & MWFRS for reactions shown; Lumber DOL=1.60 plate grip DOL=1.60
3) Truss designed for wind loads in the plane of the truss only. For studs exposed to wind (normal to the face), see Standard Industry Gable End Details as applicable, or consult qualified building designer as per ANSI/TPI 1.
4) TCLL: ASCE 7-16; Pr=20.0 psf (roof LL: Lum DOL=1.15 Plate DOL=1.15); Pf=20.0 psf (Lum DOL=1.15 Plate DOL=1.15); Is=1.0; Rough Cat B; Fully Exp.; Ce=0.9; Cs=1.00; Ct=1.10
5) Unbalanced snow loads have been considered for this design.
6) This truss has been designed for greater of min roof live load of 12.0 psf or 1.00 times flat roof load of 20.0 psf on overhangs non-concurrent with other live loads.
7) Gable requires continuous bottom chord bearing.
8) Truss to be fully sheathed from one face or securely braced against lateral movement (i.e. diagonal web).
9) Gable studs spaced at 2-0-0 oc.
10) This truss has been designed for a 10.0 psf bottom chord live load nonconcurrent with any other live loads.
11) * This truss has been designed for a live load of 20.0psf on the bottom chord in all areas where a rectangle 3-06-00 tall by 2-00-00 wide will fit between the bottom chord and any other members.
12) Provide mechanical connection (by others) of truss to bearing plate capable of withstanding 34 lb uplift at joint 8 and 34 lb uplift at joint 6.
13) This truss is designed in accordance with the 2018 International Residential Code sections R502.11.1 and R802.10.2 and referenced standard ANSI/TPI 1.

LOAD CASE(S) Standard

November 27,2024

WARNING - Verify design parameters and READ NOTES ON THIS AND INCLUDED MITEK REFERENCE PAGE MII-7473 rev. 1/2/2023 BEFORE USE.
Design valid for use only with MiTek® connectors. This design is based only upon parameters shown, and is for an individual building component, not a truss system. Before use, the building designer must verify the applicability of design parameters and properly incorporate this design into the overall building design. Bracing indicated is to prevent buckling of individual truss web and/or chord members only. Additional temporary and permanent bracing is always required for stability and to prevent collapse with possible personal injury and property damage. For general guidance regarding the fabrication, storage, delivery, erection and bracing of trusses and truss systems, see **ANSI/TPI1 Quality Criteria and DSB-22** available from Truss Plate Institute (www.tpinst.org) and **BCSI Building Component Safety Information** available from the Structural Building Component Association (www.sbcacomponents.com)

ENGINEERING BY TRENCO A MiTek Affiliate
818 Soundside Road
Edenton, NC 27932

Job	Truss	Truss Type	Qty	Ply	12 Mason Ridge - Wilmington B - Roof
25070038	D02	Common	4	1	I69852588 Job Reference (optional)

Carter Components (Sanford, NC), Sanford, NC - 27332,

Run: 8.73 S Oct 31 2024 Print: 8.730 S Oct 31 2024 MiTek Industries, Inc. Tue Nov 26 10:11:43 Page: 1
ID:cgOleTngUT0_KjLT251ox9z4Sio-RfC?PsB70Hq3NSgPqnL8w3uITXbGKWrCDoi7J4zJC?f

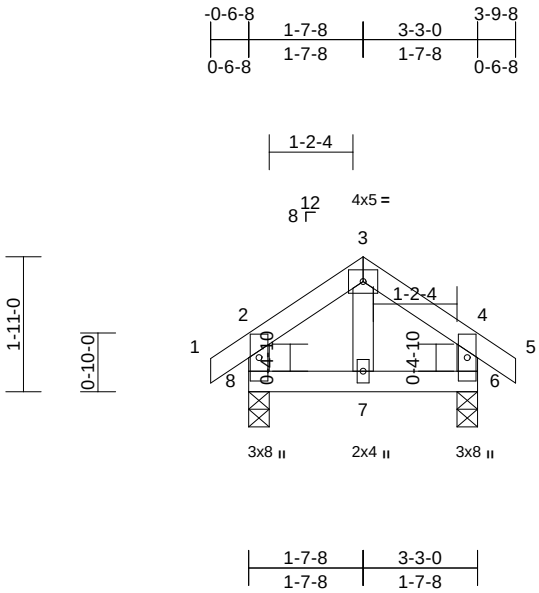

Scale = 1:32.7

Loading	(psf)	Spacing	2-0-0	CSI		DEFL	in	(loc)	l/defl	L/d	PLATES	GRIP
TCLL (roof)	20.0	Plate Grip DOL	1.15	TC	0.07	Vert(LL)	0.00	7	>999	240	MT20	244/190
Snow (Pf)	20.0	Lumber DOL	1.15	BC	0.04	Vert(CT)	0.00	7	>999	180		
TCDL	10.0	Rep Stress Incr	YES	WB	0.02	Horz(CT)	0.00	6	n/a	n/a		
BCLL	0.0*	Code	IRC2018/TPI2014	Matrix-MR								
BCDL	10.0										Weight: 16 lb	FT = 20%

LUMBER
TOP CHORD 2x4 SP No.2
BOT CHORD 2x4 SP No.2
WEBS 2x4 SP No.3

BRACING
TOP CHORD Structural wood sheathing directly applied or 3-3-0 oc purlins, except end verticals.
BOT CHORD Rigid ceiling directly applied or 10-0-0 oc bracing.

REACTIONS (size) 6=0-3-8, 8=0-3-8
Max Horiz 8=-55 (LC 12)
Max Uplift 6=-23 (LC 15), 8=-23 (LC 14)
Max Grav 6=203 (LC 22), 8=203 (LC 21)

FORCES (lb) - Maximum Compression/Maximum Tension
TOP CHORD 1-2=0/33, 2-3=-97/56, 3-4=-99/54, 4-5=0/33, 2-8=-173/110, 4-6=-173/106
BOT CHORD 7-8=-7/67, 6-7=-7/67
WEBS 3-7=-2/41

NOTES
1) Unbalanced roof live loads have been considered for this design.
2) Wind: ASCE 7-16; Vult=130mph (3-second gust) Vasd=103mph; TCDL=6.0psf; BCDL=6.0psf; h=25ft; Cat. II; Exp B; Enclosed; MWFRS (envelope) exterior zone and C-C Exterior(2E) zone; cantilever left and right exposed ; end vertical left and right exposed;C-C for members and forces & MWFRS for reactions shown; Lumber DOL=1.60 plate grip DOL=1.60
3) TCLL: ASCE 7-16; Pr=20.0 psf (roof LL: Lum DOL=1.15 Plate DOL=1.15); Pf=20.0 psf (Lum DOL=1.15 Plate DOL=1.15); Is=1.0; Rough Cat B; Fully Exp.; Ce=0.9; Cs=1.00; Ct=1.10
4) Unbalanced snow loads have been considered for this design.
5) This truss has been designed for greater of min roof live load of 12.0 psf or 1.00 times flat roof load of 20.0 psf on overhangs non-concurrent with other live loads.
6) This truss has been designed for a 10.0 psf bottom chord live load nonconcurrent with any other live loads.
7) * This truss has been designed for a live load of 20.0psf on the bottom chord in all areas where a rectangle 3-06-00 tall by 2-00-00 wide will fit between the bottom chord and any other members.
8) One H2.5A Simpson Strong-Tie connectors recommended to connect truss to bearing walls due to UPLIFT at jt(s) 8 and 6. This connection is for uplift only and does not consider lateral forces.
9) This truss is designed in accordance with the 2018 International Residential Code sections R502.11.1 and R802.10.2 and referenced standard ANSI/TPI 1.

LOAD CASE(S) Standard

November 27,2024

WARNING - Verify design parameters and READ NOTES ON THIS AND INCLUDED MITEK REFERENCE PAGE MII-7473 rev. 1/2/2023 BEFORE USE.
Design valid for use only with MiTek® connectors. This design is based only upon parameters shown, and is for an individual building component, not a truss system. Before use, the building designer must verify the applicability of design parameters and properly incorporate this design into the overall building design. Bracing indicated is to prevent buckling of individual truss web and/or chord members only. Additional temporary and permanent bracing is always required for stability and to prevent collapse with possible personal injury and property damage. For general guidance regarding the fabrication, storage, delivery, erection and bracing of trusses and truss systems, see **ANSI/TPI1 Quality Criteria and DSB-22** available from Truss Plate Institute (www.tpinst.org) and **BCSI Building Component Safety Information** available from the Structural Building Component Association (www.sbcacomponents.com)

ENGINEERING BY TRENCO A MiTek Affiliate
818 Soundside Road
Edenton, NC 27932

Job	Truss	Truss Type	Qty	Ply	12 Mason Ridge - Wilmington B - Roof
25070038	VL1	Valley	1	1	I69852589 Job Reference (optional)

Carter Components (Sanford, NC), Sanford, NC - 27332, Run: 8.73 S Oct 31 2024 Print: 8.730 S Oct 31 2024 MiTek Industries, Inc. Tue Nov 26 10:11:43 Page: 1

ID:4IUA5n6tT0ltV4so0m7npDzvU7E-RfC?PsB70Hq3NSgPqnL8w3uITXbGKWrCDoi7J4zJC?f

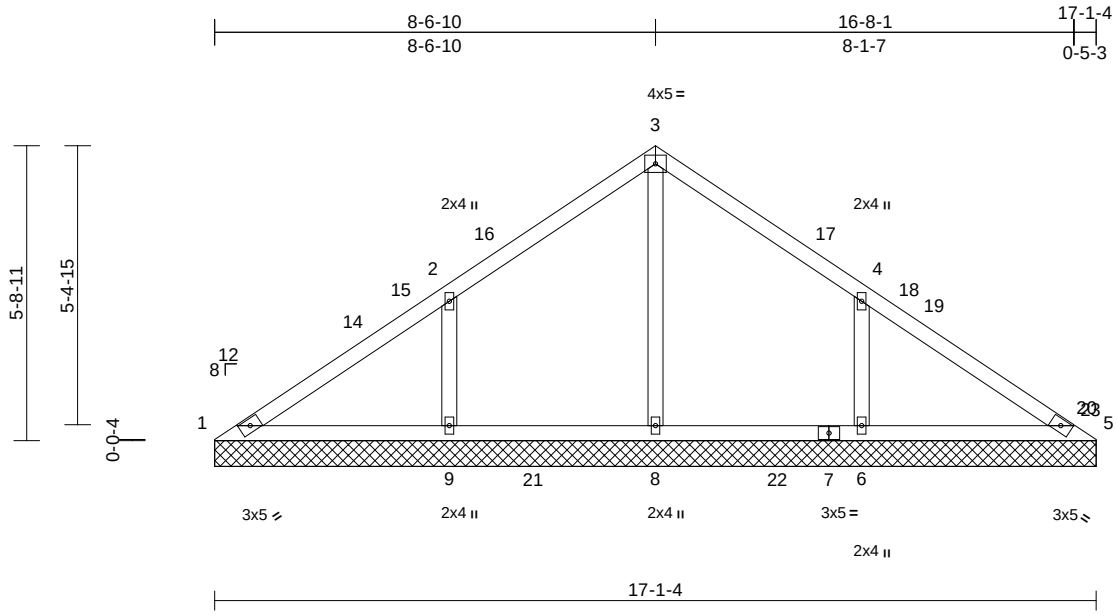

Scale = 1:44.7

Loading	(psf)	Spacing	2-0-0	CSI		DEFL	in	(loc)	l/defl	L/d	PLATES	GRIP
TCLL (roof)	20.0	Plate Grip DOL	1.15	TC	0.36	Vert(LL)	n/a	-	n/a	999	MT20	244/190
Snow (Pf)	20.0	Lumber DOL	1.15	BC	0.17	Vert(TL)	n/a	-	n/a	999		
TCDL	10.0	Rep Stress Incr	YES	WB	0.19	Horiz(TL)	0.00	5	n/a	n/a		
BCLL	0.0*	Code	IRC2018/TPI2014	Matrix-MSH								
BCDL	10.0										Weight: 69 lb	FT = 20%

LUMBER

TOP CHORD 2x4 SP No.2
BOT CHORD 2x4 SP No.2
OTHERS 2x4 SP No.3

BRACING

TOP CHORD Structural wood sheathing directly applied or 6-0-0 oc purlins.
BOT CHORD Rigid ceiling directly applied or 6-0-0 oc bracing.

REACTIONS (size) 1=17-1-4, 5=17-1-4, 6=17-1-4, 8=17-1-4, 9=17-1-4
Max Horiz 1=130 (LC 11)
Max Uplift 1=-4 (LC 10), 6=-142 (LC 15), 9=-145 (LC 14)
Max Grav 1=104 (LC 25), 5=78 (LC 36), 6=524 (LC 21), 8=495 (LC 24), 9=526 (LC 20)

FORCES (lb) - Maximum Compression/Maximum Tension
TOP CHORD 1-2=-132/252, 2-3=-55/196, 3-4=-56/182, 4-5=-104/224
BOT CHORD 1-9=-147/132, 8-9=-147/94, 6-8=-147/94, 5-6=-147/94
WEBS 3-8=-333/9, 2-9=-411/181, 4-6=-410/179

NOTES

1) Unbalanced roof live loads have been considered for this design.
2) Wind: ASCE 7-16; Vult=130mph (3-second gust) Vasd=103mph; TCDL=6.0psf; BCDL=6.0psf; h=25ft; Cat. II; Exp B; Enclosed; MWFRS (envelope) exterior zone and C-C Exterior(2E) 0-0-6 to 3-0-6, Interior (1) 3-0-6 to 5-7-0, Exterior(2R) 5-7-0 to 11-7-0, Interior (1) 11-7-0 to 13-8-3, Exterior(2E) 13-8-3 to 16-8-3 zone; cantilever left and right exposed ; end vertical left and right exposed;C-C for members and forces & MWFRS for reactions shown; Lumber DOL=1.60 plate grip DOL=1.60
3) Truss designed for wind loads in the plane of the truss only. For studs exposed to wind (normal to the face), see Standard Industry Gable End Details as applicable, or consult qualified building designer as per ANSI/TPI 1.
4) TCLL: ASCE 7-16; Pr=20.0 psf (roof LL: Lum DOL=1.15 Plate DOL=1.15); Pf=20.0 psf (Lum DOL=1.15 Plate DOL=1.15); Is=1.0; Rough Cat B; Fully Exp.; Ce=0.9; Cs=1.00; Ct=1.10
5) Unbalanced snow loads have been considered for this design.
6) Gable requires continuous bottom chord bearing.
7) Gable studs spaced at 4-0-0 oc.
8) This truss has been designed for a 10.0 psf bottom chord live load nonconcurrent with any other live loads.
9) * This truss has been designed for a live load of 20.0psf on the bottom chord in all areas where a rectangle 3-06-00 tall by 2-00-00 wide will fit between the bottom chord and any other members, with BCDL = 10.0psf.
10) Provide mechanical connection (by others) of truss to bearing plate capable of withstanding 4 lb uplift at joint 1, 145 lb uplift at joint 9 and 142 lb uplift at joint 6.
11) This truss is designed in accordance with the 2018 International Residential Code sections R502.11.1 and R802.10.2 and referenced standard ANSI/TPI 1.

LOAD CASE(S) Standard

November 27,2024

WARNING - Verify design parameters and READ NOTES ON THIS AND INCLUDED MITEK REFERENCE PAGE MII-7473 rev. 1/2/2023 BEFORE USE.
Design valid for use only with MiTek® connectors. This design is based only upon parameters shown, and is for an individual building component, not a truss system. Before use, the building designer must verify the applicability of design parameters and properly incorporate this design into the overall building design. Bracing indicated is to prevent buckling of individual truss web and/or chord members only. Additional temporary and permanent bracing is always required for stability and to prevent collapse with possible personal injury and property damage. For general guidance regarding the fabrication, storage, delivery, erection and bracing of trusses and truss systems, see **ANSI/TPI1 Quality Criteria and DSB-22** available from Truss Plate Institute (www.tpinst.org) and **BCSI Building Component Safety Information** available from the Structural Building Component Association (www.sbcacomponents.com)

ENGINEERING BY TRENCO A MiTek Affiliate
818 Soundside Road
Edenton, NC 27932

Job	Truss	Truss Type	Qty	Ply	12 Mason Ridge - Wilmington B - Roof
25070038	VL2	Valley	1	1	I69852590 Job Reference (optional)

Carter Components (Sanford, NC), Sanford, NC - 27332, Run: 8.73 S Oct 31 2024 Print: 8.730 S Oct 31 2024 MiTek Industries, Inc. Tue Nov 26 10:11:43 Page: 1
ID:cNSDSFJwhxmcQX4ty7QXSbzvU7_-RfC?PsB70Hq3NSgPqnL8w3uITXbGKWrCDoi7J4zJC?f

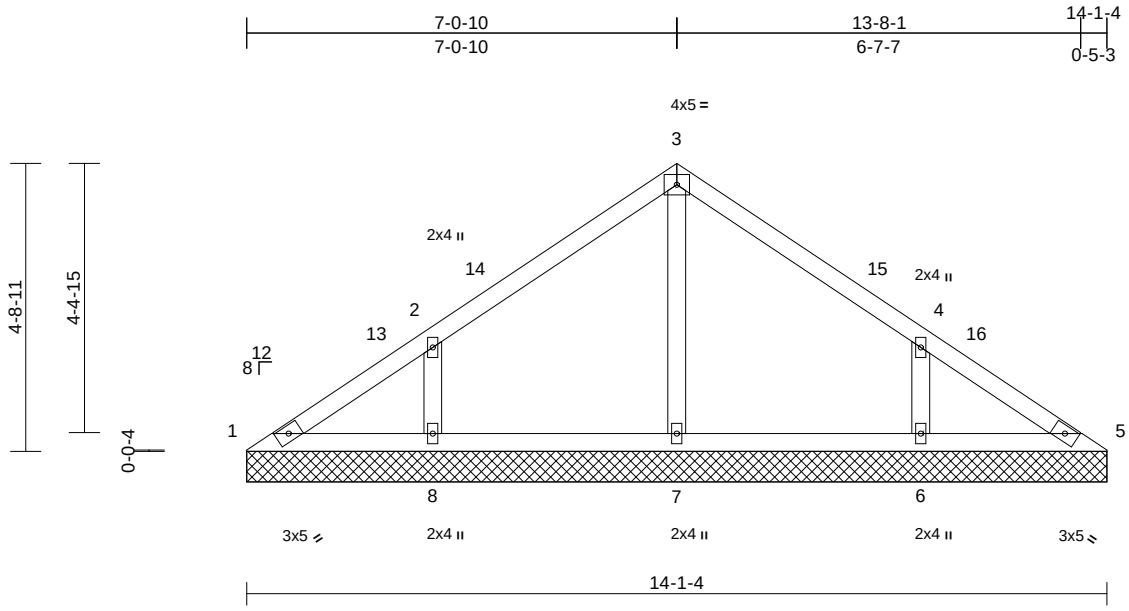

Scale = 1:37.8

Loading	(psf)	Spacing	2-0-0	CSI		DEFL	in	(loc)	l/defl	L/d	PLATES	GRIP
TCLL (roof)	20.0	Plate Grip DOL	1.15	TC	0.29	Vert(LL)	n/a	-	n/a	999	MT20	244/190
Snow (Pf)	20.0	Lumber DOL	1.15	BC	0.11	Vert(TL)	n/a	-	n/a	999		
TCDL	10.0	Rep Stress Incr	YES	WB	0.09	Horiz(TL)	0.00	5	n/a	n/a		
BCLL	0.0*	Code	IRC2018/TPI2014	Matrix-MSH								
BCDL	10.0										Weight: 55 lb	FT = 20%

LUMBER
TOP CHORD 2x4 SP No.2
BOT CHORD 2x4 SP No.2
OTHERS 2x4 SP No.3

BRACING
TOP CHORD Structural wood sheathing directly applied or 6-0-0 oc purlins.
BOT CHORD Rigid ceiling directly applied or 6-0-0 oc bracing.

REACTIONS (size) 1=14-1-4, 5=14-1-4, 6=14-1-4, 7=14-1-4, 8=14-1-4
Max Horiz 1=107 (LC 13)
Max Uplift 1=-12 (LC 15), 6=-117 (LC 15), 8=-119 (LC 14)
Max Grav 1=97 (LC 25), 5=86 (LC 1), 6=460 (LC 21), 7=310 (LC 20), 8=460 (LC 20)

FORCES (lb) - Maximum Compression/Maximum Tension
TOP CHORD 1-2=-131/112, 2-3=-142/100, 3-4=-142/92, 4-5=-104/80
BOT CHORD 1-8=-44/112, 7-8=-44/66, 6-7=-44/66, 5-6=-44/82
WEBS 3-7=-229/9, 2-8=-385/159, 4-6=-385/158

NOTES
1) Unbalanced roof live loads have been considered for this design.
2) Wind: ASCE 7-16; Vult=130mph (3-second gust) Vasd=103mph; TCDL=6.0psf; BCDL=6.0psf; h=25ft; Cat. II; Exp B; Enclosed; MWFRS (envelope) exterior zone and C-C Exterior(2E) 0-0-6 to 3-1-0, Interior (1) 3-1-0 to 4-1-0, Exterior(2R) 4-1-0 to 10-1-0, Interior (1) 10-1-0 to 11-1-0, Exterior(2E) 11-1-0 to 14-1-10 zone; cantilever left and right exposed ; end vertical left and right exposed;C-C for members and forces & MWFRS for reactions shown; Lumber DOL=1.60 plate grip DOL=1.60
3) Truss designed for wind loads in the plane of the truss only. For studs exposed to wind (normal to the face), see Standard Industry Gable End Details as applicable, or consult qualified building designer as per ANSI/TPI 1.
4) TCLL: ASCE 7-16; Pr=20.0 psf (roof LL: Lum DOL=1.15 Plate DOL=1.15); Pf=20.0 psf (Lum DOL=1.15 Plate DOL=1.15); Is=1.0; Rough Cat B; Fully Exp.; Ce=0.9; Cs=1.00; Ct=1.10
5) Unbalanced snow loads have been considered for this design.
6) Gable requires continuous bottom chord bearing.
7) Gable studs spaced at 4-0-0 oc.
8) This truss has been designed for a 10.0 psf bottom chord live load nonconcurrent with any other live loads.
9) * This truss has been designed for a live load of 20.0psf on the bottom chord in all areas where a rectangle 3-06-00 tall by 2-00-00 wide will fit between the bottom chord and any other members.
10) Provide mechanical connection (by others) of truss to bearing plate capable of withstanding 12 lb uplift at joint 1, 119 lb uplift at joint 8 and 117 lb uplift at joint 6.
11) This truss is designed in accordance with the 2018 International Residential Code sections R502.11.1 and R802.10.2 and referenced standard ANSI/TPI 1.

LOAD CASE(S) Standard

November 27,2024

WARNING - Verify design parameters and READ NOTES ON THIS AND INCLUDED MITEK REFERENCE PAGE MII-7473 rev. 1/2/2023 BEFORE USE.
Design valid for use only with MiTek® connectors. This design is based only upon parameters shown, and is for an individual building component, not a truss system. Before use, the building designer must verify the applicability of design parameters and properly incorporate this design into the overall building design. Bracing indicated is to prevent buckling of individual truss web and/or chord members only. Additional temporary and permanent bracing is always required for stability and to prevent collapse with possible personal injury and property damage. For general guidance regarding the fabrication, storage, delivery, erection and bracing of trusses and truss systems, see **ANSI/TPI1 Quality Criteria and DSB-22** available from Truss Plate Institute (www.tpinst.org) and **BCSI Building Component Safety Information** available from the Structural Building Component Association (www.sbcacomponents.com)

ENGINEERING BY TRENCO A MiTek Affiliate
818 Soundside Road
Edenton, NC 27932

Job	Truss	Truss Type	Qty	Ply	12 Mason Ridge - Wilmington B - Roof
25070038	VL3	Valley	1	1	I69852591 Job Reference (optional)

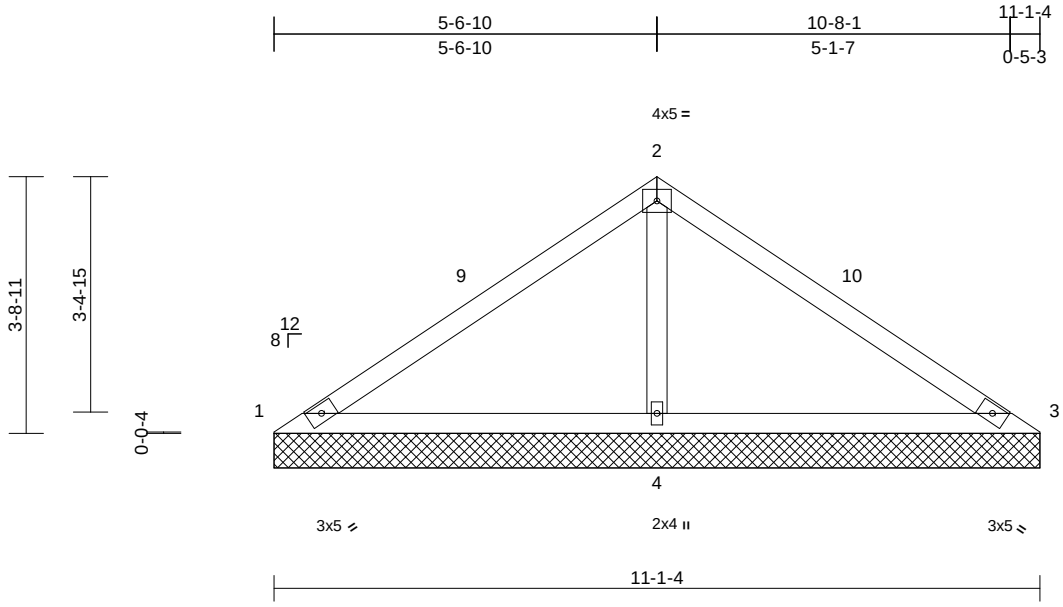

Scale = 1:33.4

Loading	(psf)	Spacing	2-0-0	CSI		DEFL	in	(loc)	l/defl	L/d	PLATES	GRIP
TCLL (roof)	20.0	Plate Grip DOL	1.15	TC	0.59	Vert(LL)	n/a	-	n/a	999	MT20	244/190
Snow (Pf)	20.0	Lumber DOL	1.15	BC	0.54	Vert(TL)	n/a	-	n/a	999		
TCDL	10.0	Rep Stress Incr	YES	WB	0.21	Horiz(TL)	0.01	4	n/a	n/a		
BCLL	0.0*	Code	IRC2018/TPI2014	Matrix-MSH								
BCDL	10.0										Weight: 39 lb	FT = 20%

LUMBER
TOP CHORD 2x4 SP No.2
BOT CHORD 2x4 SP No.2
OTHERS 2x4 SP No.3

BRACING
TOP CHORD Structural wood sheathing directly applied or 10-0-0 oc purlins.
BOT CHORD Rigid ceiling directly applied or 6-0-0 oc bracing.

REACTIONS (size) 1=11-1-4, 3=11-1-4, 4=11-1-4
Max Horiz 1=-83 (LC 10)
Max Uplift 1=-81 (LC 21), 3=-81 (LC 20), 4=-103 (LC 14)
Max Grav 1=111 (LC 20), 3=111 (LC 21), 4=930 (LC 21)

FORCES (lb) - Maximum Compression/Maximum Tension
TOP CHORD 1-2=-120/497, 2-3=-120/497
BOT CHORD 1-4=-357/168, 3-4=-357/168
WEBS 2-4=-769/251

NOTES
1) Unbalanced roof live loads have been considered for this design.
2) Wind: ASCE 7-16; Vult=130mph (3-second gust) Vasd=103mph; TCDL=6.0psf; BCDL=6.0psf; h=25ft; Cat. II; Exp B; Enclosed; MWFRS (envelope) exterior zone and C-C Exterior(2E) 0-0-6 to 3-0-6, Exterior(2R) 3-0-6 to 8-1-10, Exterior(2E) 8-1-10 to 11-1-10 zone; cantilever left and right exposed ; end vertical left and right exposed;C-C for members and forces & MWFRS for reactions shown; Lumber DOL=1.60 plate grip DOL=1.60
3) Truss designed for wind loads in the plane of the truss only. For studs exposed to wind (normal to the face), see Standard Industry Gable End Details as applicable, or consult qualified building designer as per ANSI/TPI 1.
4) TCLL: ASCE 7-16; Pr=20.0 psf (roof LL: Lum DOL=1.15 Plate DOL=1.15); Pf=20.0 psf (Lum DOL=1.15 Plate DOL=1.15); Is=1.0; Rough Cat B; Fully Exp.; Ce=0.9; Cs=1.00; Ct=1.10
5) Unbalanced snow loads have been considered for this design.
6) Gable requires continuous bottom chord bearing.
7) Gable studs spaced at 4-0-0 oc.
8) This truss has been designed for a 10.0 psf bottom chord live load nonconcurrent with any other live loads.
9) * This truss has been designed for a live load of 20.0psf on the bottom chord in all areas where a rectangle 3-06-00 tall by 2-00-00 wide will fit between the bottom chord and any other members.
10) Provide mechanical connection (by others) of truss to bearing plate capable of withstanding 81 lb uplift at joint 1, 81 lb uplift at joint 3 and 103 lb uplift at joint 4.
11) This truss is designed in accordance with the 2018 International Residential Code sections R502.11.1 and R802.10.2 and referenced standard ANSI/TPI 1.

LOAD CASE(S) Standard

November 27,2024

WARNING - Verify design parameters and READ NOTES ON THIS AND INCLUDED MITEK REFERENCE PAGE MII-7473 rev. 1/2/2023 BEFORE USE.
Design valid for use only with MiTek® connectors. This design is based only upon parameters shown, and is for an individual building component, not a truss system. Before use, the building designer must verify the applicability of design parameters and properly incorporate this design into the overall building design. Bracing indicated is to prevent buckling of individual truss web and/or chord members only. Additional temporary and permanent bracing is always required for stability and to prevent collapse with possible personal injury and property damage. For general guidance regarding the fabrication, storage, delivery, erection and bracing of trusses and truss systems, see **ANSI/TPI1 Quality Criteria and DSB-22** available from Truss Plate Institute (www.tpinst.org) and **BCSI Building Component Safety Information** available from the Structural Building Component Association (www.sbcacomponents.com)

ENGINEERING BY TRENCO A MiTek Affiliate
818 Soundside Road
Edenton, NC 27932

Job	Truss	Truss Type	Qty	Ply	12 Mason Ridge - Wilmington B - Roof
25070038	VL4	Valley	1	1	I69852592 Job Reference (optional)

Carter Components (Sanford, NC), Sanford, NC - 27332,

Run: 8.73 S Oct 31 2024 Print: 8.730 S Oct 31 2024 MiTek Industries, Inc. Tue Nov 26 10:11:43 Page: 1
ID:1Efnf5YT_4Hmqccj7JnDGpzvU6g-RfC?PsB70Hq3NSgPqnL8w3uITXbGKWrCDoi7J4zJC?f

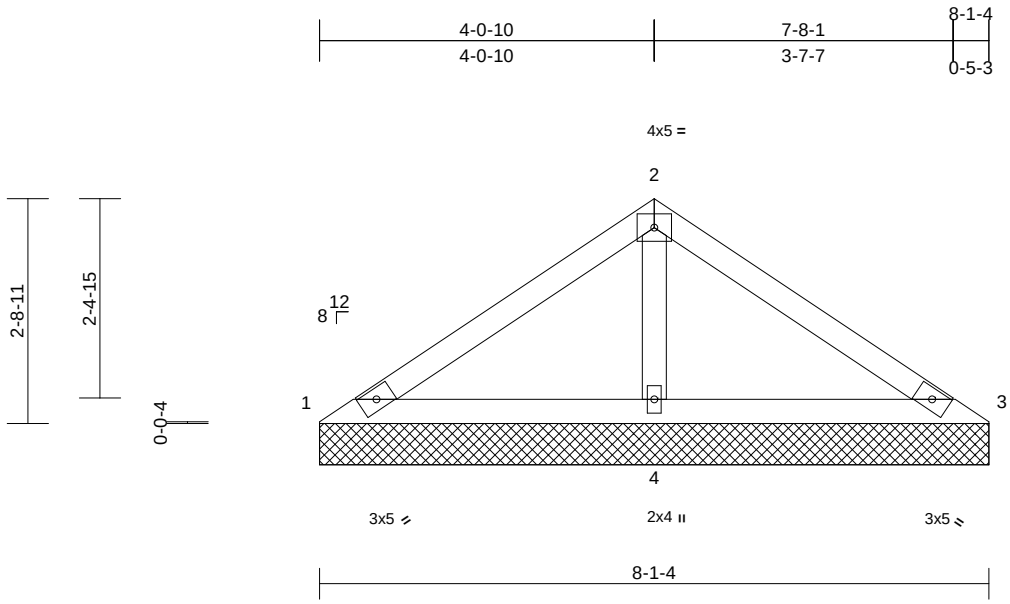

Scale = 1:27.9

Loading	(psf)	Spacing	2-0-0	CSI		DEFL	in	(loc)	l/defl	L/d	PLATES	GRIP
TCLL (roof)	20.0	Plate Grip DOL	1.15	TC	0.32	Vert(LL)	n/a	-	n/a	999	MT20	244/190
Snow (Pf)	20.0	Lumber DOL	1.15	BC	0.32	Vert(TL)	n/a	-	n/a	999		
TCDL	10.0	Rep Stress Incr	YES	WB	0.10	Horiz(TL)	0.00	4	n/a	n/a		
BCLL	0.0*	Code	IRC2018/TPI2014	Matrix-MP								
BCDL	10.0										Weight: 28 lb	FT = 20%

LUMBER
TOP CHORD 2x4 SP No.2
BOT CHORD 2x4 SP No.2
OTHERS 2x4 SP No.3

BRACING
TOP CHORD Structural wood sheathing directly applied or 8-1-4 oc purlins.
BOT CHORD Rigid ceiling directly applied or 6-0-0 oc bracing.

REACTIONS (size) 1=8-1-4, 3=8-1-4, 4=8-1-4
Max Horiz 1=-60 (LC 10)
Max Uplift 1=-27 (LC 21), 3=-27 (LC 20), 4=-66 (LC 14)
Max Grav 1=105 (LC 20), 3=105 (LC 21), 4=608 (LC 21)

FORCES (lb) - Maximum Compression/Maximum Tension
TOP CHORD 1-2=-96/293, 2-3=-96/293
BOT CHORD 1-4=-243/149, 3-4=-243/149
WEBS 2-4=-485/192

NOTES
1) Unbalanced roof live loads have been considered for this design.
2) Wind: ASCE 7-16; Vult=130mph (3-second gust) Vasd=103mph; TCDL=6.0psf; BCDL=6.0psf; h=25ft; Cat. II; Exp B; Enclosed; MWFRS (envelope) exterior zone and C-C Exterior(2E) 0-0-6 to 3-0-6, Exterior(2R) 3-0-6 to 5-1-10, Exterior(2E) 5-1-10 to 8-1-10 zone; cantilever left and right exposed ; end vertical left and right exposed;C-C for members and forces & MWFRS for reactions shown; Lumber DOL=1.60 plate grip DOL=1.60
3) Truss designed for wind loads in the plane of the truss only. For studs exposed to wind (normal to the face), see Standard Industry Gable End Details as applicable, or consult qualified building designer as per ANSI/TPI 1.
4) TCLL: ASCE 7-16; Pr=20.0 psf (roof LL: Lum DOL=1.15 Plate DOL=1.15); Pf=20.0 psf (Lum DOL=1.15 Plate DOL=1.15); Is=1.0; Rough Cat B; Fully Exp.; Ce=0.9; Cs=1.00; Ct=1.10
5) Unbalanced snow loads have been considered for this design.
6) Gable requires continuous bottom chord bearing.
7) Gable studs spaced at 4-0-0 oc.
8) This truss has been designed for a 10.0 psf bottom chord live load nonconcurrent with any other live loads.
9) * This truss has been designed for a live load of 20.0psf on the bottom chord in all areas where a rectangle 3-06-00 tall by 2-00-00 wide will fit between the bottom chord and any other members.
10) Provide mechanical connection (by others) of truss to bearing plate capable of withstanding 27 lb uplift at joint 1, 27 lb uplift at joint 3 and 66 lb uplift at joint 4.
11) This truss is designed in accordance with the 2018 International Residential Code sections R502.11.1 and R802.10.2 and referenced standard ANSI/TPI 1.

LOAD CASE(S) Standard

November 27,2024

WARNING - Verify design parameters and READ NOTES ON THIS AND INCLUDED MITEK REFERENCE PAGE MII-7473 rev. 1/2/2023 BEFORE USE.
Design valid for use only with MiTek® connectors. This design is based only upon parameters shown, and is for an individual building component, not a truss system. Before use, the building designer must verify the applicability of design parameters and properly incorporate this design into the overall building design. Bracing indicated is to prevent buckling of individual truss web and/or chord members only. Additional temporary and permanent bracing is always required for stability and to prevent collapse with possible personal injury and property damage. For general guidance regarding the fabrication, storage, delivery, erection and bracing of trusses and truss systems, see **ANSI/TPI1 Quality Criteria and DSB-22** available from Truss Plate Institute (www.tpinst.org) and **BCSI Building Component Safety Information** available from the Structural Building Component Association (www.sbcacomponents.com)

ENGINEERING BY TRENCO A MiTek Affiliate
818 Soundside Road
Edenton, NC 27932

Job	Truss	Truss Type	Qty	Ply	12 Mason Ridge - Wilmington B - Roof
25070038	VL5	Valley	1	1	I69852593 Job Reference (optional)

Carter Components (Sanford, NC), Sanford, NC - 27332,

Run: 8.73 S Oct 31 2024 Print: 8.730 S Oct 31 2024 MiTek Industries, Inc. Tue Nov 26 10:11:43 Page: 1
ID:k9GZlWgkd9YL08NejQyZgwzvU6W-RfC?PsB70Hq3NSgPqnL8w3uITXbGKWrCDoi7J4zJC?f

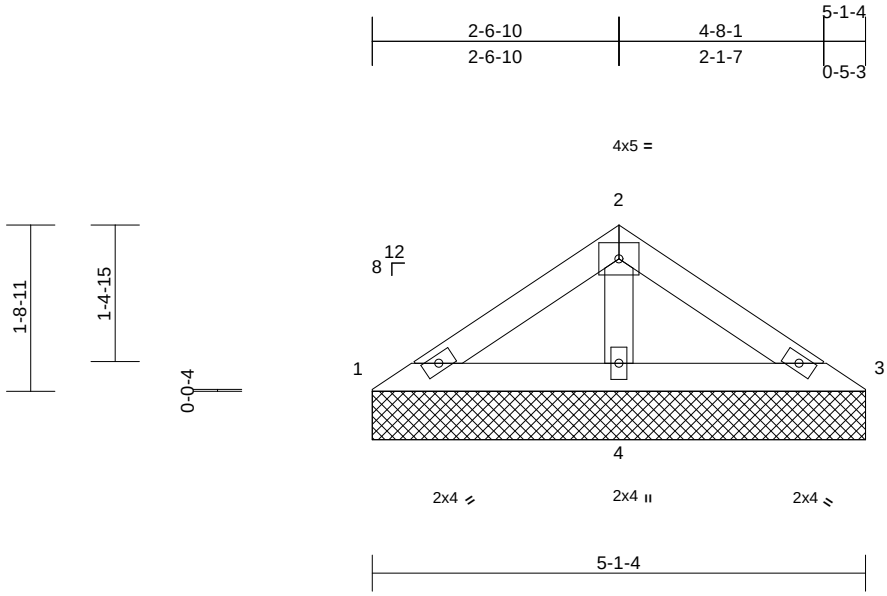

Scale = 1:23.8

Loading	(psf)	Spacing	2-0-0	CSI		DEFL	in	(loc)	l/defl	L/d	PLATES	GRIP
TCLL (roof)	20.0	Plate Grip DOL	1.15	TC	0.09	Vert(LL)	n/a	-	n/a	999	MT20	244/190
Snow (Pf)	20.0	Lumber DOL	1.15	BC	0.11	Vert(TL)	n/a	-	n/a	999		
TCDL	10.0	Rep Stress Incr	YES	WB	0.04	Horiz(TL)	0.00	4	n/a	n/a		
BCLL	0.0*	Code	IRC2018/TPI2014	Matrix-MP								
BCDL	10.0										Weight: 17 lb	FT = 20%

LUMBER
TOP CHORD 2x4 SP No.2
BOT CHORD 2x4 SP No.2
OTHERS 2x4 SP No.3

BRACING
TOP CHORD Structural wood sheathing directly applied or 5-1-4 oc purlins.
BOT CHORD Rigid ceiling directly applied or 6-0-0 oc bracing.

REACTIONS (size) 1=5-1-4, 3=5-1-4, 4=5-1-4
Max Horiz 1=-36 (LC 10)
Max Uplift 1=-5 (LC 14), 3=-11 (LC 15), 4=-27 (LC 14)
Max Grav 1=89 (LC 20), 3=89 (LC 21), 4=308 (LC 21)

FORCES (lb) - Maximum Compression/Maximum Tension
TOP CHORD 1-2=-87/116, 2-3=-87/116
BOT CHORD 1-4=-100/81, 3-4=-100/81
WEBS 2-4=-222/97

NOTES
1) Unbalanced roof live loads have been considered for this design.
2) Wind: ASCE 7-16; Vult=130mph (3-second gust) Vasd=103mph; TCDL=6.0psf; BCDL=6.0psf; h=25ft; Cat. II; Exp B; Enclosed; MWFRS (envelope) exterior zone and C-C Exterior(2E) zone; cantilever left and right exposed ; end vertical left and right exposed;C-C for members and forces & MWFRS for reactions shown; Lumber DOL=1.60 plate grip DOL=1.60
3) Truss designed for wind loads in the plane of the truss only. For studs exposed to wind (normal to the face), see Standard Industry Gable End Details as applicable, or consult qualified building designer as per ANSI/TPI 1.
4) TCLL: ASCE 7-16; Pr=20.0 psf (roof LL: Lum DOL=1.15 Plate DOL=1.15); Pf=20.0 psf (Lum DOL=1.15 Plate DOL=1.15); Is=1.0; Rough Cat B; Fully Exp.; Ce=0.9; Cs=1.00; Ct=1.10
5) Unbalanced snow loads have been considered for this design.
6) Gable requires continuous bottom chord bearing.
7) Gable studs spaced at 4-0-0 oc.
8) This truss has been designed for a 10.0 psf bottom chord live load nonconcurrent with any other live loads.
9) * This truss has been designed for a live load of 20.0psf on the bottom chord in all areas where a rectangle 3-06-00 tall by 2-00-00 wide will fit between the bottom chord and any other members.
10) Provide mechanical connection (by others) of truss to bearing plate capable of withstanding 5 lb uplift at joint 1, 11 lb uplift at joint 3 and 27 lb uplift at joint 4.
11) This truss is designed in accordance with the 2018 International Residential Code sections R502.11.1 and R802.10.2 and referenced standard ANSI/TPI 1.

LOAD CASE(S) Standard

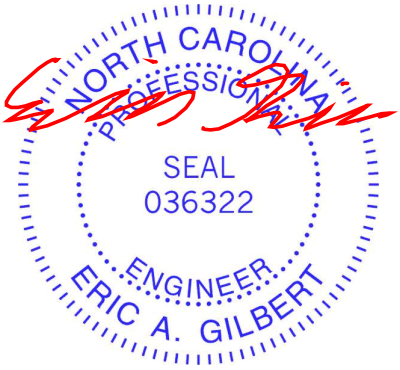

November 27,2024

WARNING - Verify design parameters and READ NOTES ON THIS AND INCLUDED MITEK REFERENCE PAGE MII-7473 rev. 1/2/2023 BEFORE USE.
Design valid for use only with MiTek® connectors. This design is based only upon parameters shown, and is for an individual building component, not a truss system. Before use, the building designer must verify the applicability of design parameters and properly incorporate this design into the overall building design. Bracing indicated is to prevent buckling of individual truss web and/or chord members only. Additional temporary and permanent bracing is always required for stability and to prevent collapse with possible personal injury and property damage. For general guidance regarding the fabrication, storage, delivery, erection and bracing of trusses and truss systems, see **ANSI/TPI1 Quality Criteria and DSB-22** available from Truss Plate Institute (www.tpinst.org) and **BCSI Building Component Safety Information** available from the Structural Building Component Association (www.sbcacomponents.com)

ENGINEERING BY TRENCO A MiTek Affiliate
818 Soundside Road
Edenton, NC 27932

Symbols

PLATE LOCATION AND ORIENTATION

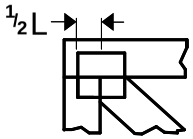

Center plate on joint unless x, y offsets are indicated. Dimensions are in ft-in-sixteenths. Apply plates to both sides of truss and fully embed teeth.

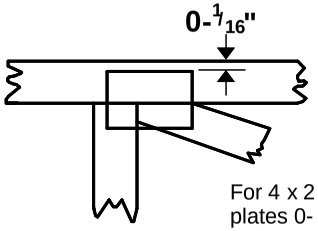

For 4 x 2 orientation, locate plates 0- 1/16" from outside edge of truss.

This symbol indicates the required direction of slots in connector plates.

* Plate location details available in MiTek software or upon request.

PLATE SIZE

4 x 4

The first dimension is the plate width measured perpendicular to slots. Second dimension is the length parallel to slots.

LATERAL BRACING LOCATION

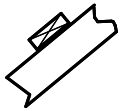

Indicated by symbol shown and/or by text in the bracing section of the output. Use T or I bracing if indicated.

BEARING

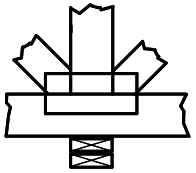

Indicates location where bearings (supports) occur. Icons vary but reaction section indicates joint number/letter where bearings occur. Min size shown is for crushing only.

Industry Standards:

ANSI/TPI1: National Design Specification for Metal Plate Connected Wood Truss Construction.
DSB-22: Design Standard for Bracing.
BCSI: Building Component Safety Information, Guide to Good Practice for Handling, Installing, Restraining & Bracing of Metal Plate Connected Wood Trusses.

Numbering System

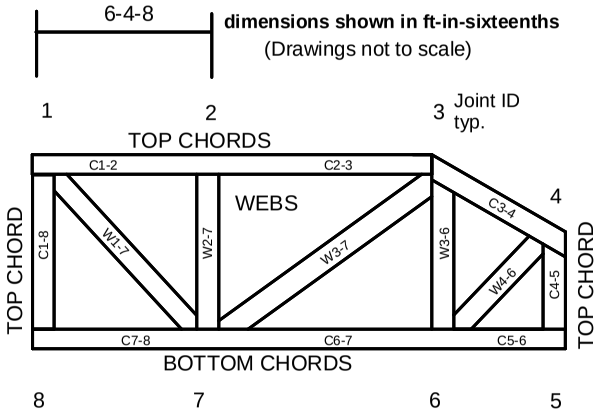

JOINTS ARE GENERALLY NUMBERED/LETTERED CLOCKWISE AROUND THE TRUSS STARTING AT THE JOINT FARTHEST TO THE LEFT.

CHORDS AND WEBS ARE IDENTIFIED BY END JOINT NUMBERS/LETTERS.

Product Code Approvals

ICC-ES Reports:

ESR-1988, ESR-2362, ESR-2685, ESR-3282
ESR-4722, ESL-1388

Design General Notes

Trusses are designed for wind loads in the plane of the truss unless otherwise shown.

Lumber design values are in accordance with ANSI/TPI 1 section 6.3 These truss designs rely on lumber values established by others.

© 2023 MiTek® All Rights Reserved

MiTek®

ENGINEERING BY TRENCO
A MiTek Affiliate

General Safety Notes

Failure to Follow Could Cause Property Damage or Personal Injury

1. Additional stability bracing for truss system, e.g. diagonal or X-bracing, is always required. See BCSI.
2. Truss bracing must be designed by an engineer. For wide truss spacing, individual lateral braces themselves may require bracing, or alternative Tor I bracing should be considered.
3. Never exceed the design loading shown and never stack materials on inadequately braced trusses.
4. Provide copies of this truss design to the building designer, erection supervisor, property owner and all other interested parties.
5. Cut members to bear tightly against each other.
6. Place plates on each face of truss at each joint and embed fully. Knots and wane at joint locations are regulated by ANSI/TPI 1.
7. Design assumes trusses will be suitably protected from the environment in accord with ANSI/TPI 1.
8. Unless otherwise noted, moisture content of lumber shall not exceed 19% at time of fabrication.
9. Unless expressly noted, this design is not applicable for use with fire retardant, preservative treated, or green lumber.
10. Camber is a non-structural consideration and is the responsibility of truss fabricator. General practice is to camber for dead load deflection.
11. Plate type, size, orientation and location dimensions indicated are minimum plating requirements.
12. Lumber used shall be of the species and size, and in all respects, equal to or better than that specified.
13. Top chords must be sheathed or purlins provided at spacing indicated on design.
14. Bottom chords require lateral bracing at 10 ft. spacing, or less, if no ceiling is installed, unless otherwise noted.
15. Connections not shown are the responsibility of others.
16. Do not cut or alter truss member or plate without prior approval of an engineer.
17. Install and load vertically unless indicated otherwise.
18. Use of green or treated lumber may pose unacceptable environmental, health or performance risks. Consult with project engineer before use.
19. Review all portions of this design (front, back, words and pictures) before use. Reviewing pictures alone is not sufficient.
20. Design assumes manufacture in accordance with ANSI/TPI 1 Quality Criteria.
21. The design does not take into account any dynamic or other loads other than those expressly stated.