DRAYTON-RALE

RALEIGH- LOT 00.0110 BLAKE POND SF

(MODEL# 2695)

ELEVATION 2 - GR

79 Frost Meadow Way

DRB HOMES

INDEX

AREA CALCULATIONS

ELEVATION 2	HEATED	COVERED / UNHEATED	UNCOVERED
FIRST FLOOR	1266 SF		
GARAGE		547 SF	
FRONT PORCH – ELEVATION 2		53 SF	
SECOND FLOOR	1430 SF		
OPTIONS			
SCREEN PORCH		120 SF	
3RD CAR GARAGE		230 SF	
TOTAL	2696 SF	950 SF	

LOT SPECIFIC

1	LOT 00.0110	BLAKE POND SF
		DRAYTON REV. RALE 2 ELEVATION 2
2	ADDRESS	79 FROST MEADOW WAY LILLINGTON, NC 27546

FRONT ELEVATION 2

SCALE: 1/8" = 1'-0"

REAR ELEVATION 2

SCALE: 1/8" = 1'-0"

MASTER PLAN INFORMATION		
REVISION	DATE	UPDATED DATE
2-RALE	03-06-2019	04-26-2024

DRAWN BY: ITS

DATE: 07/02/2025

PLAN NO. 2695

DRB HOMES

HOUSE NAME: DRAYTON

DRAWING TITLE: FRONT & REAR ELEVATIONS

SHEET No. A1.1

FILE: Lot 00.0110.dwg DATE: 7/2/2025 11:36 AM

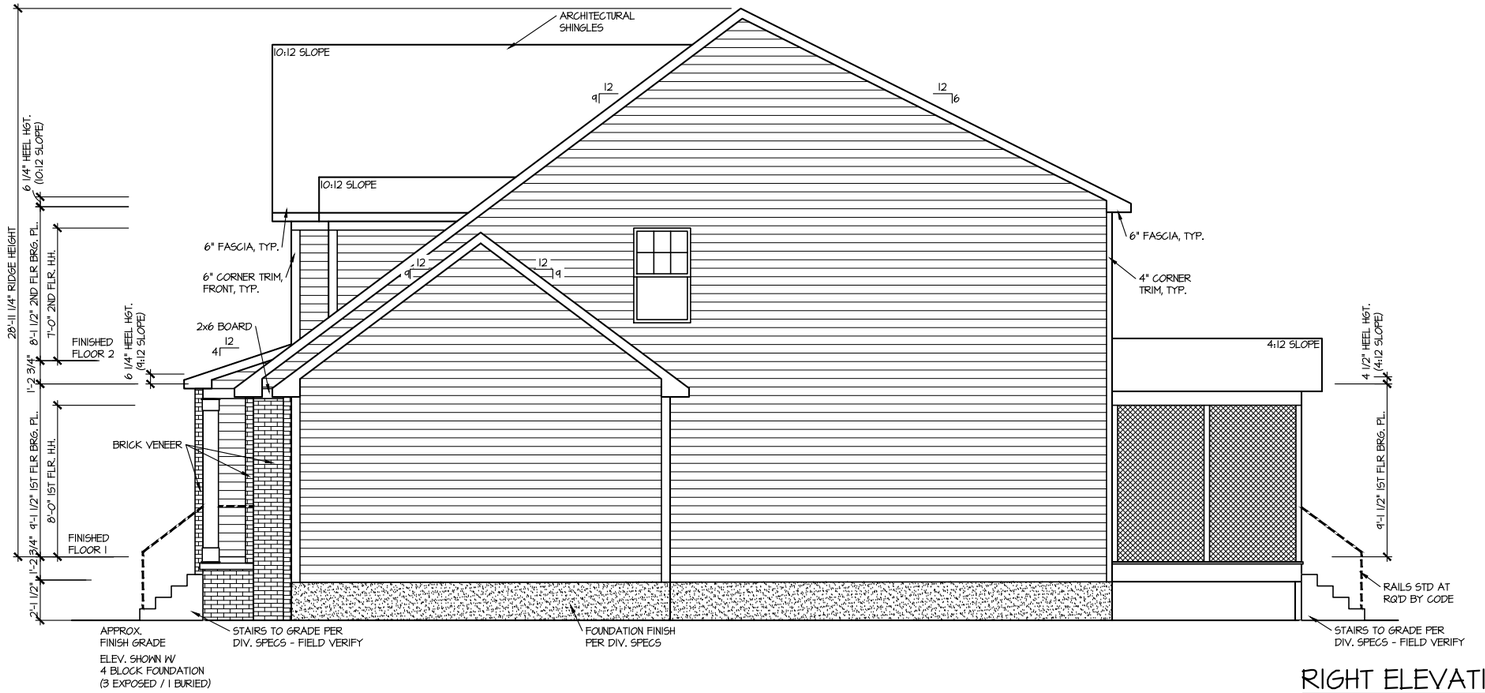

RIGHT ELEVATION 2

SCALE: 1/8" = 1'-0"

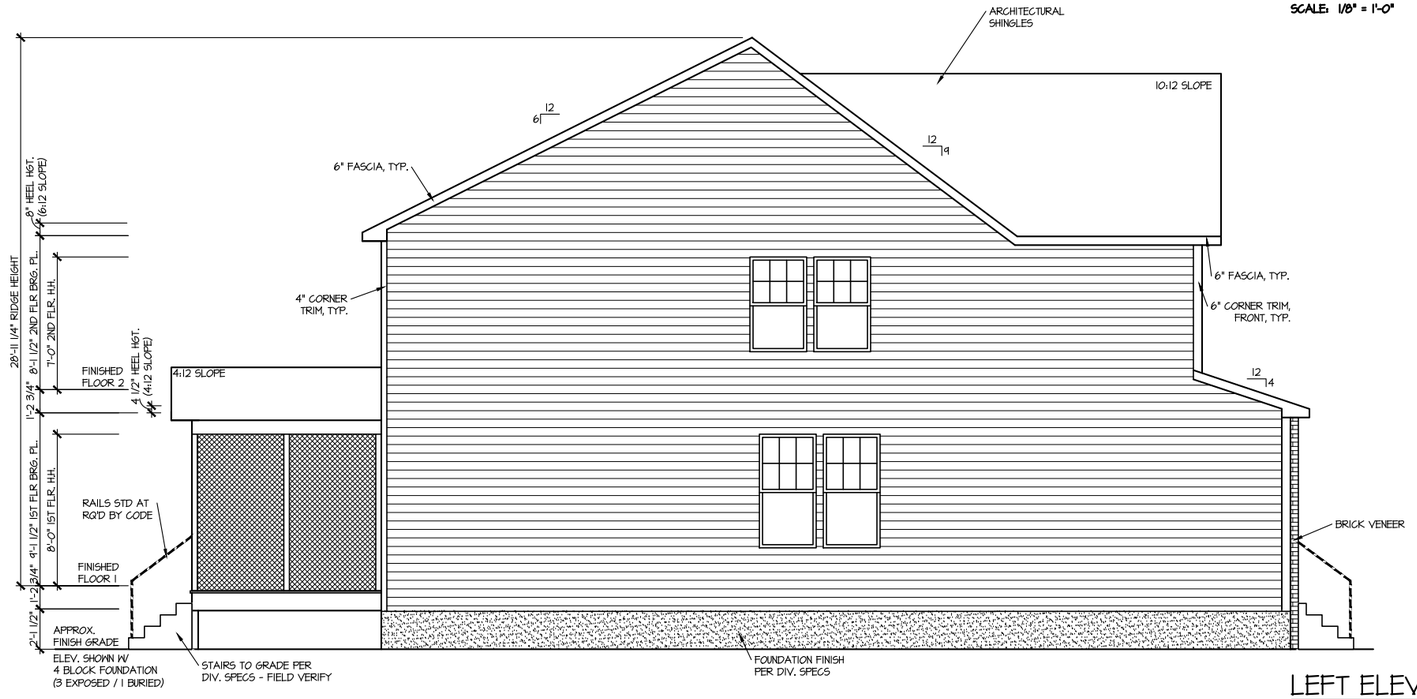

LEFT ELEVATION 2

SCALE: 1/8" = 1'-0"

MASTER PLAN INFORMATION		
REVISION	DATE	UPDATED DATE
2-RALE	03-06-2019	04-26-2024

DRAWN BY: ITS

DATE: 07/02/2025

PLAN NO. 2695

DRB HOMES

HOUSE NAME: DRAYTON

DRAWING TITLE: RIGHT & LEFT ELEVATIONS

SHEET No. A1.2

FILE: Lot 00.0110.dwg DATE: 7/2/2025 11:36 AM

ROOF VENTILATION CALCULATIONS:

ROOF AREA = 1775 SQ. FT.
OVERALL REQUIRED VENTILATION:
1 TO 150 = 11.83 SQ. FT.
1 TO 300 = 5.92 SQ. FT.
50-80% IN TOP THIRD = 2.96- 4.66 FT. (1 TO 300)

NET FREE AREA OF VENTED SOFFIT = 5.7 SQ. IN / LINEAR FT.
NET FREE AREA OF RIDGE VENT = 18 SQ. IN/ LINEAR FT.

LOWER VENTING: (BOTTOM 2/3 RDS)
75 LINEAR FEET OF SOFFIT X 5.7 SQ. IN. = 2.96 SQ. FT.
UPPER VENTING: (TOP 1/3 RD)
24 LINEAR FEET OF RIDGE X 18 SQ. IN = 3 SQ. FT.
3 SQ. FT. BETWEEN 50% - 80%
(1 TO 300 ALLOWED)
TOTAL ROOF VENTILATION: 5.96 SQ. FT. > 4.66 SQ. FT. (RQ'D)

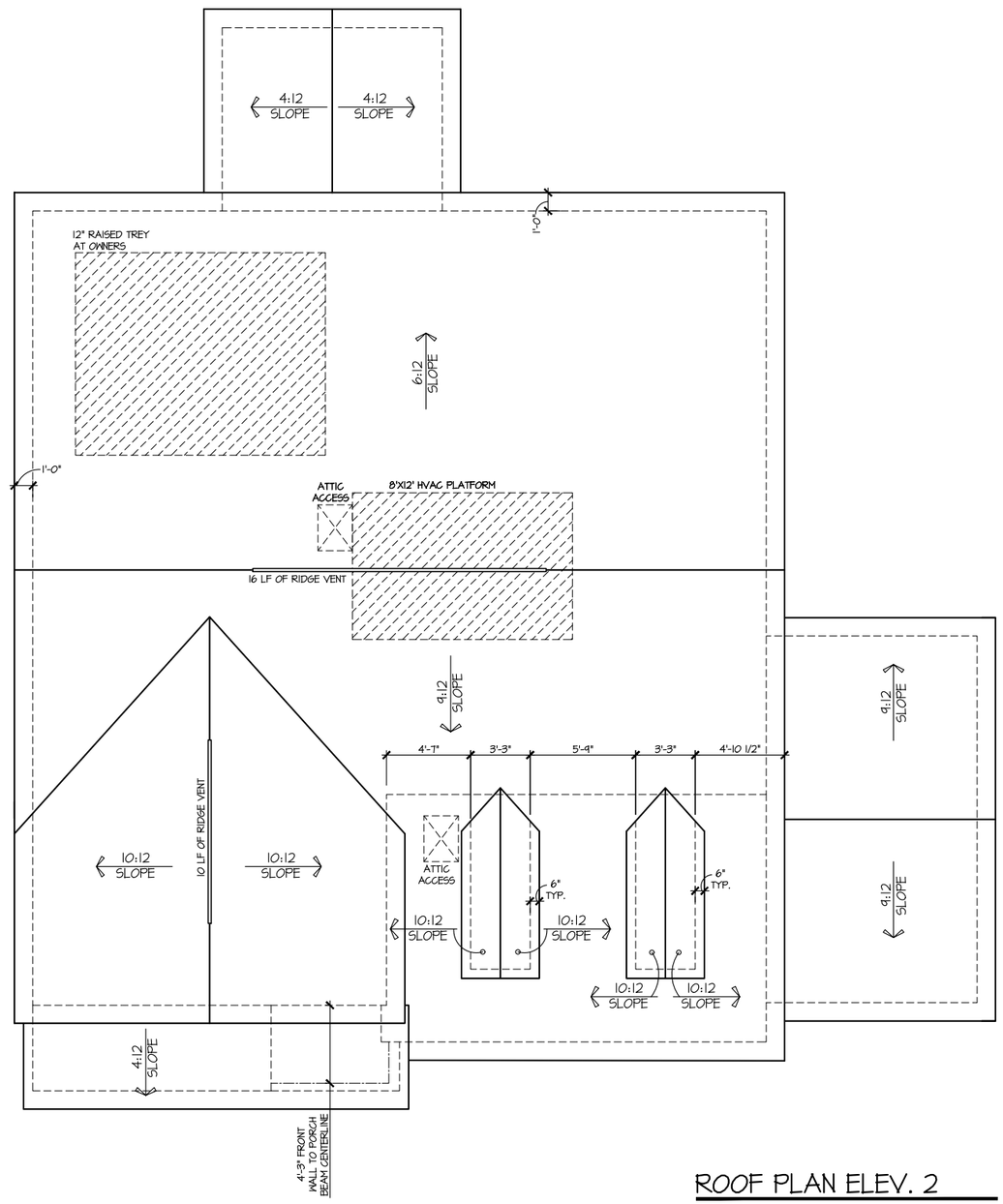

ROOF PLAN ELEV. 2
SCALE: 1/8" = 1'-0"

MASTER PLAN INFORMATION		
REVISION	DATE	UPDATED DATE
2-RALE	03-06-2019	04-26-2024

DRAWN BY: ITS
DATE: 07/02/2025
PLAN NO. 2695

DRB HOMES

HOUSE NAME: DRAYTON
DRAWING TITLE: ROOF PLAN

SHEET No. A1.3

FILE: Lot 00.0110.dwg DATE: 7/2/2025 11:36 AM

CRAWL AREA = 1267 SQ. FT.
OVERALL REQUIRED VENTILATION:
1 TO 150 = 8.44 SQ. FT.

NET FREE AREA OF VENT = 62 SQ. IN PER VENT
WITTEN AUTOMATIC VENT B-EBLACK (MB) OR EQUAL

VENTING REQUIREMENT:
6.3 SQ. FT / 62 SQ. IN = 19.6 VENTS = 20 VENTS

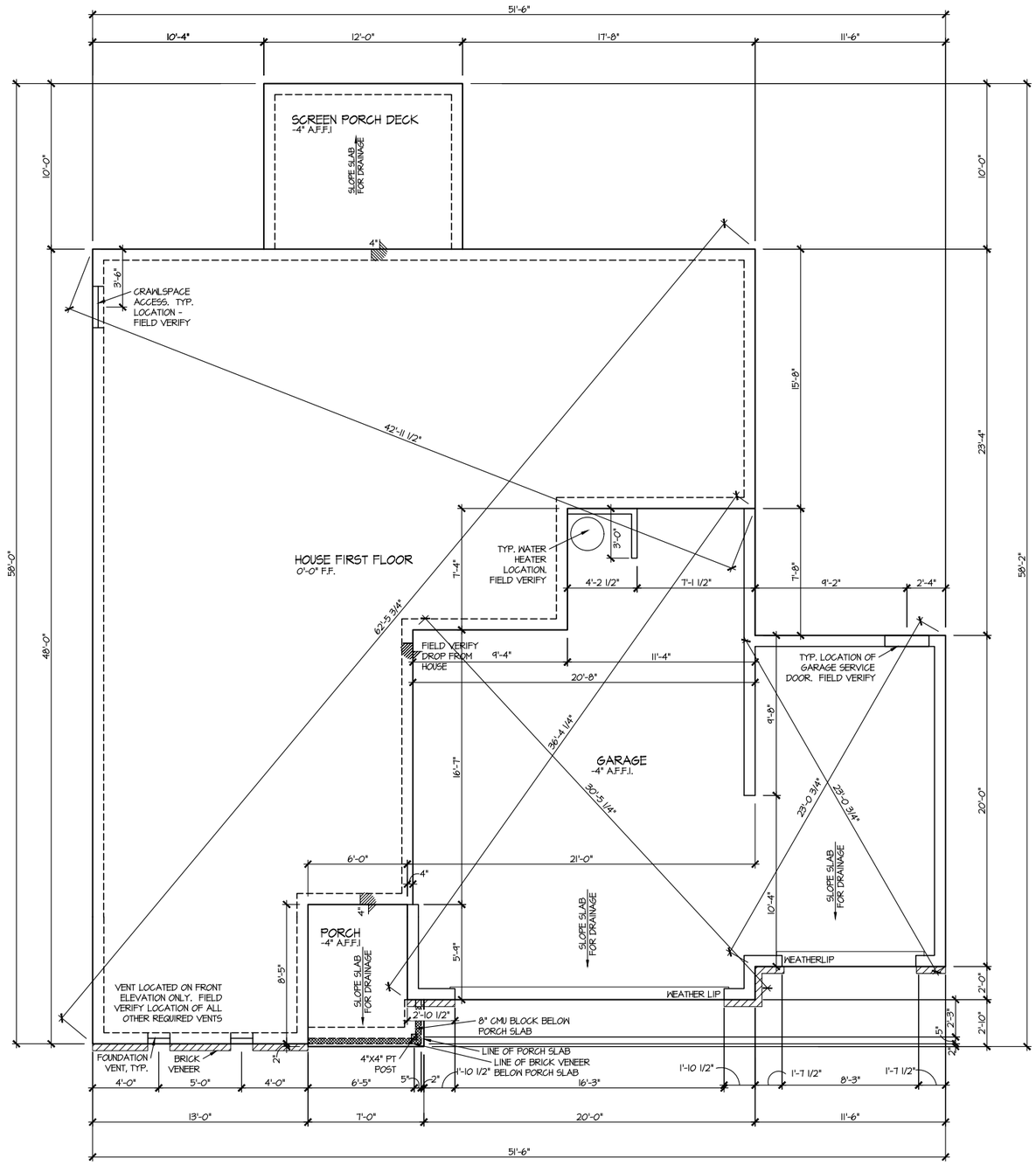

ELEVATION 2
CRAWL SPACE PLAN

SCALE: 1/8" = 1'-0"

MASTER PLAN INFORMATION		
REVISION	DATE	UPDATED DATE
2-RALE	03-06-2019	04-26-2024

DRAWN BY: ITS
DATE: 07/02/2025
PLAN NO. 2695

DRB HOMES

HOUSE NAME: DRAYTON
DRAWING TITLE: CRAWL SPACE PLAN

SHEET No. A2.3

FILE: Lot 00.0110.dwg DATE: 7/2/2025 11:36 AM

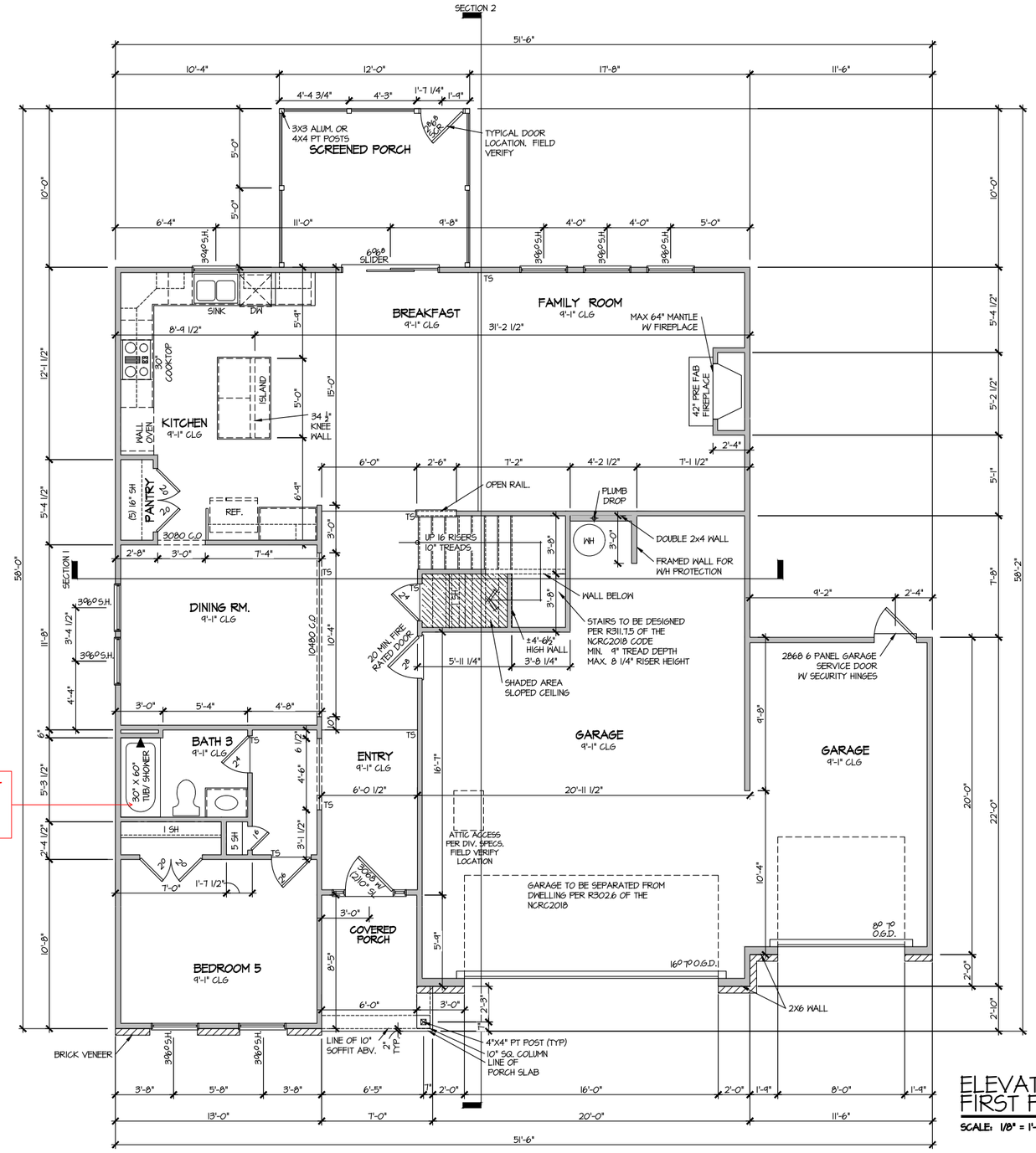

Level 1 Tile Shower
w/Fiber Glass Pan
ILO Standard

ELEVATION 2
FIRST FLOOR PLAN

SCALE: 1/8" = 1'-0"

FILE: Lot 00.0110.dwg DATE: 7/2/2025 11:36 AM

MASTER PLAN INFORMATION		
REVISION	DATE	UPDATED DATE
2-RALE	03-06-2019	04-26-2024

DRAWN BY: ITS

DATE: 07/02/2025

PLAN NO. 2695

DRB HOMES

HOUSE NAME: DRAYTON

DRAWING TITLE: FIRST FLOOR PLAN

SHEET No. A3.1

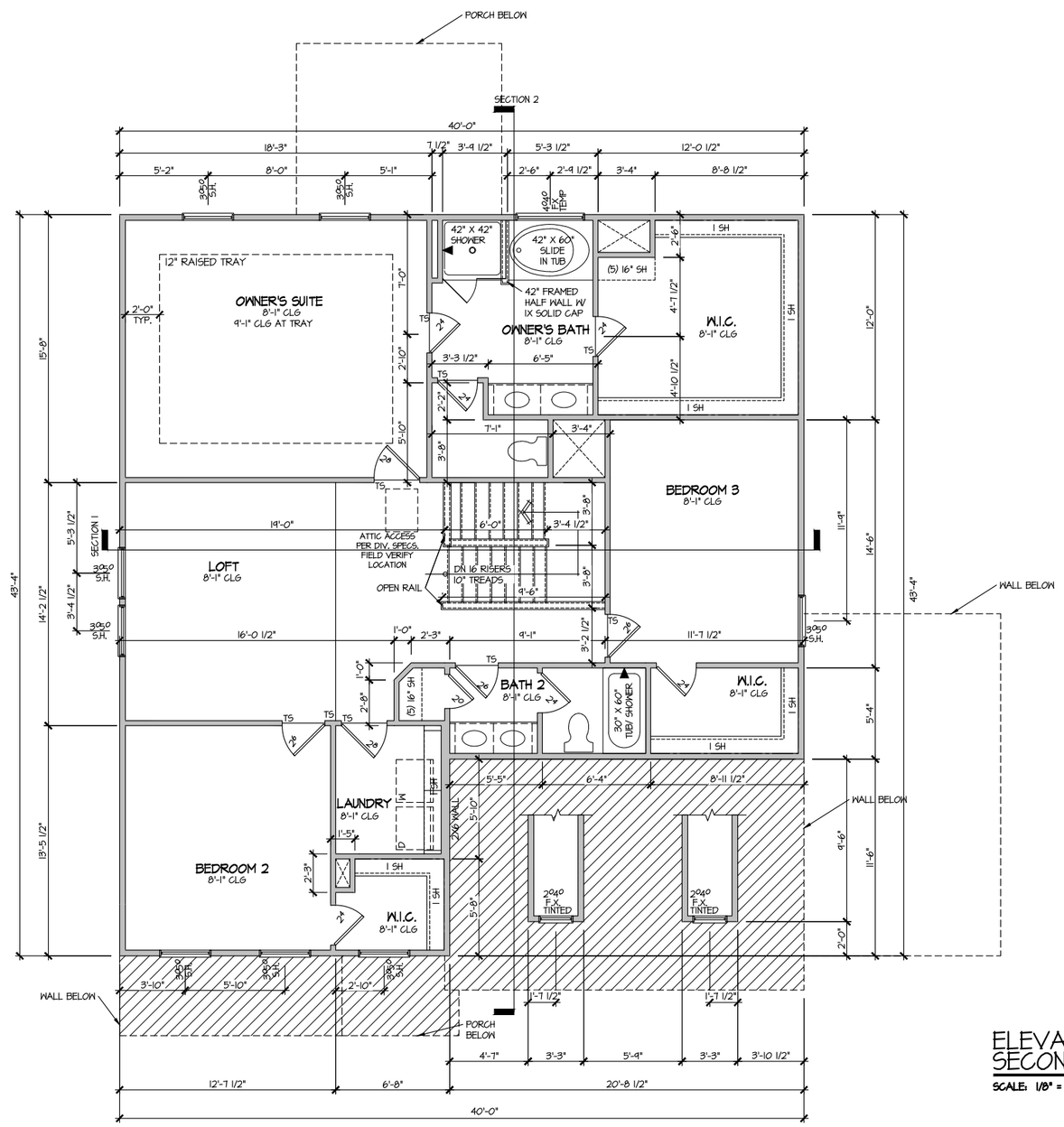

ELEVATION 2
SECOND FLOOR PLAN

SCALE: 1/8" = 1'-0"

MASTER PLAN INFORMATION		
REVISION	DATE	UPDATED DATE
2-RALE	03-06-2019	04-26-2024

DRAWN BY: ITS

DATE: 07/02/2025

PLAN NO. 2695

DRB HOMES

HOUSE NAME: DRAYTON

DRAWING TITLE: SECOND FLOOR PLAN

SHEET No. A3.2

FILE: Lot 00.0110.dwg DATE: 7/2/2025 11:36 AM

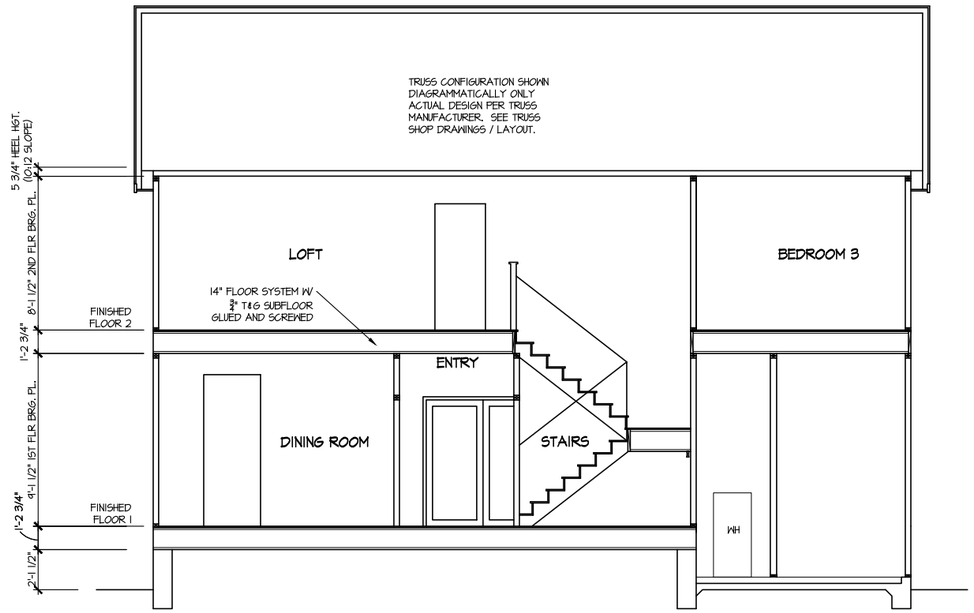

SECTION 1

SCALE: 1/8" = 1'-0"

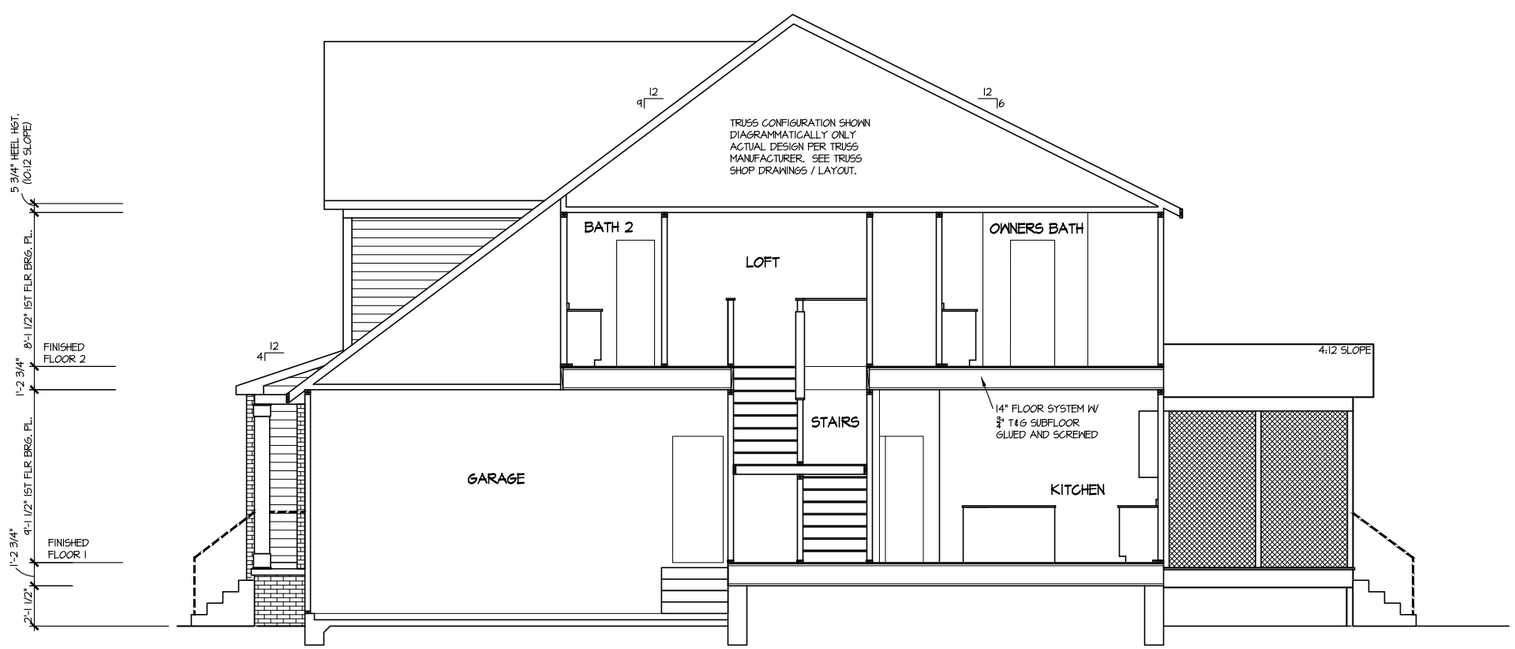

SECTION 2

SCALE: 1/8" = 1'-0"

FILE: Lot 00.0110.dwg DATE: 7/2/2025 11:36 AM

MASTER PLAN INFORMATION	
REVISION	DATE
2-RALE	03-06-2019
UPDATED DATE	
04-26-2024	

DRAWN BY: ITS

DATE: 07/02/2025

PLAN NO. 2695

DRB HOMES

HOUSE NAME: DRAYTON

DRAWING TITLE: BUILDING SECTION

SHEET No. A4.1

ELECTRICAL LEGEND

- SINGLE POLE SWITCH
- THREE WAY SWITCH
- FOUR WAY SWITCH
- DUPLEX AFCI RECEPTACLE
- DUPLEX AFCI RECEPTACLE - BOTTOM HALF SWITCHED
- DUPLEX AFCI RECEPTACLE - FLOOR MOUNTED
- 220V RECEPTACLE - 220V
- GFI DUPLEX AFCI RECEPTACLE - GFI
- WP/GFI DUPLEX AFCI RECEPTACLE - WATERPROOF GFI
- SMOKE DETECTOR - WIRED IN SERIES
- EXHAUST FAN MOTOR
- CO DETECTOR
- DOOR CHIME
- LIGHT FIXTURE - WALL MOUNTED
- LIGHT FIXTURE - CEILING MOUNTED
- LED LIGHT FIXTURE - LED SURFACE MOUNTED
- P PULLCHAIN LAMPHOLDER
- K KEYLESS LAMPHOLDER

NOTE: ALL ELECTRICAL WORK SHALL CONFORM TO THE REQUIREMENTS OF THE ADOPTED VERSION OF THE NATIONAL ELECTRICAL CODE, THE LOCAL POWER COMPANY AND TO ALL APPLICABLE LOCAL REGULATIONS.

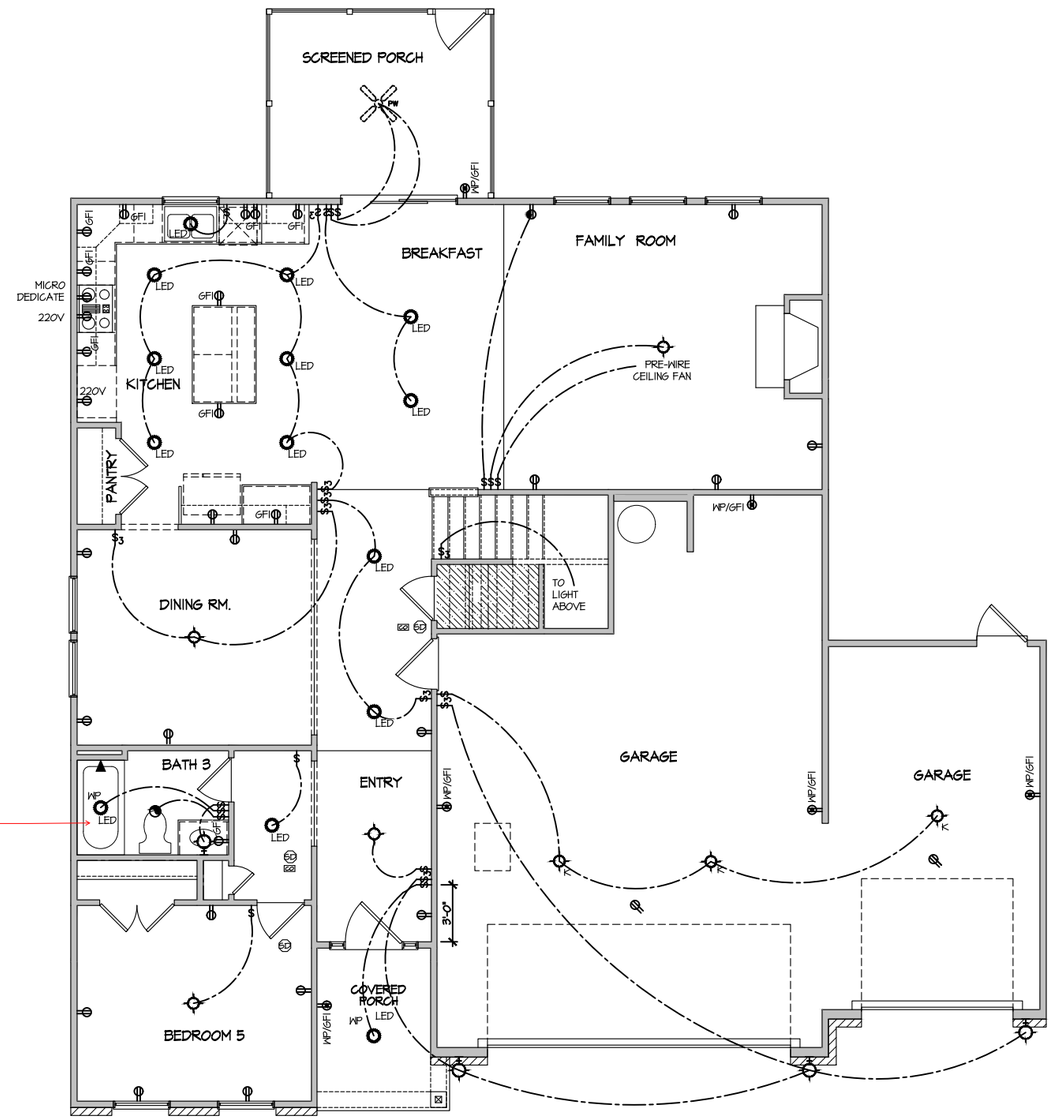

Level 1 Tile Shower w/Fiber Glass Pan ILO Standard

ELECTRICAL PLAN
FIRST FLOOR - ELEV. 2

SCALE: 1/8" = 1'-0"

MASTER PLAN INFORMATION		
REVISION	DATE	UPDATED DATE
2-RALE	03-06-2019	04-26-2024

DRAWN BY: ITS

DATE: 07/02/2025

PLAN NO. 2695

DRB HOMES

HOUSE NAME: DRAYTON

DRAWING TITLE: FIRST FLOOR ELECTRICAL

SHEET No. E1.1

FILE: Lot 00.0110.dwg DATE: 7/2/2025 11:36 AM

ELECTRICAL LEGEND

$	SINGLE POLE SWITCH
$3	THREE WAY SWITCH
$4	FOUR WAY SWITCH
	DUPLEX AFCI RECEPTACLE
	DUPLEX AFCI RECEPTACLE - BOTTOM HALF SWITCHED
	DUPLEX AFCI RECEPTACLE - FLOOR MOUNTED
220V	RECEPTACLE - 220V
GFI	DUPLEX AFCI RECEPTACLE - GFI
WP/GFI	DUPLEX AFCI RECEPTACLE - WATERPROOF GFI
SD	SMOKE DETECTOR - WIRED IN SERIES
	EXHAUST FAN MOTOR
CO	CO DETECTOR
DC	DOOR CHIME
	LIGHT FIXTURE - WALL MOUNTED
	LIGHT FIXTURE - CEILING MOUNTED
LED	LIGHT FIXTURE - LED SURFACE MOUNTED
P	PULLCHAIN LAMPHOLDER
K	KEYLESS LAMPHOLDER

NOTE: ALL ELECTRICAL WORK SHALL CONFORM TO THE REQUIREMENTS OF THE ADOPTED VERSION OF THE NATIONAL ELECTRICAL CODE, THE LOCAL POWER COMPANY AND TO ALL APPLICABLE LOCAL REGULATIONS.

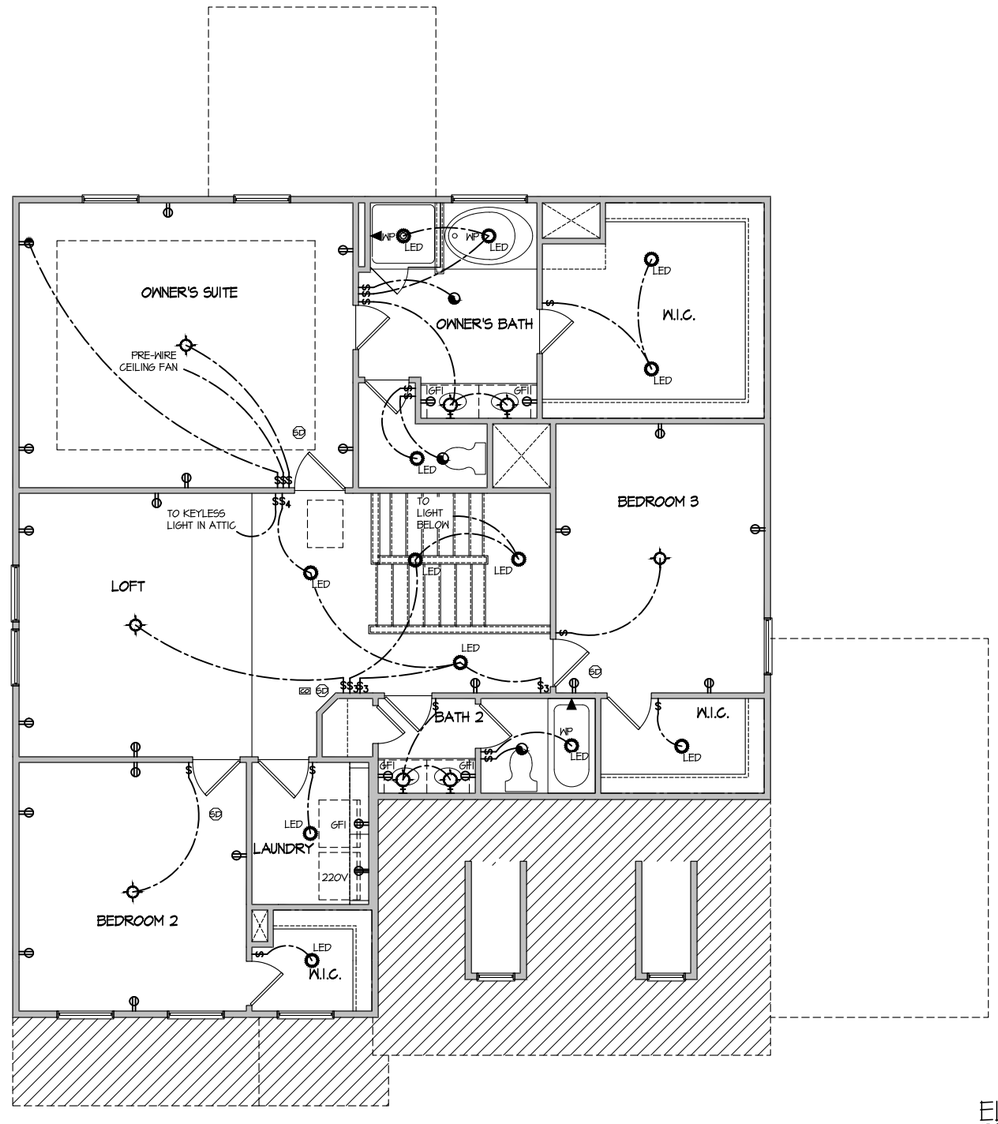

ELECTRICAL PLAN
SECOND FLOOR - ELEV. 2

SCALE: 1/8" = 1'-0"

MASTER PLAN INFORMATION		
REVISION	DATE	UPDATED DATE
2-RALE	03-06-2019	04-26-2024

DRAWN BY: ITS

DATE: 07/02/2025

PLAN NO. 2695

DRB HOMES

HOUSE NAME: DRAYTON

DRAWING TITLE: SECOND FLOOR ELECTRICAL

SHEET No. E1.2

FILE: Lot 00.0110.dwg DATE: 7/2/2025 11:36 AM

GENERAL STRUCTURAL NOTES

FOUNDATION

- DESIGN IS BASED ON 2018 NORTH CAROLINA STATE BUILDING CODE: RESIDENTIAL CODE.
- FOOTING DESIGN - 2,000 PSF ALLOWABLE SOIL BEARING PRESSURE IS ASSUMED. BUILDER/CONTRACTOR MUST VERIFY.
- FASTEN 2x SILL PLATES TO FND WITH A MINIMUM OF 2 ANCHORS PER PLATE, 12" MAX. FROM PLATE ENDS - UTILIZING:
  - 1/2" DIA. ANCHOR BOLTS @ 6'-0" O.C, 7" MIN. EMBEDMENT (CONC), 15" MIN. EMBEDMENT (CMU)
  - SIMPSON MASA ANCHOR STRAPS @ 6'-0" O.C. (CONC)
  - SIMPSON MAB23 ANCHOR STRAPS @ 2'-8" O.C. (CMU)

  (REFER TO DETAILS FOR 10' TALL WALL ANCHOR REQUIREMENTS)
- ALL LUMBER EXPOSED TO WEATHER OR IN CONTACT W/ CONCRETE OR CMU SHALL BE PRESERVATIVE TREATED SOUTHERN PINE #2.
- BUILDER TO VERIFY CORROSION-RESISTANCE COMPATIBILITY OF HARDWARE & FASTENERS IN CONTACT w/ PRESERVATIVE-TREATED WOOD. CONTACT LUMBER & HARDWARE SUPPLIERS TO COORD.
- BASEMENT INTERIOR BEARING WALLS & EXTERIOR WALK-OUT BASEMENT WALLS SHALL BE 2x6 @ 16" O.C. SPF OR SYP, "STUD" GRADE OR BETTER.
- CONCRETE DESIGN BASED ON ACI 318. CONCRETE SHALL ATTAIN THE FOLLOWING MIN. COMPRESSIVE STRENGTHS IN 28 DAYS, U.N.O.:
  - f'c = 4,000 psi: .... FOUNDATION WALLS
  - 2,500 psi: .... FOOTINGS & INTERIOR SLABS ON GRADE
  - 3,000 psi: .... GARAGE & EXTERIOR SLABS ON GRADE
  - fy = 60,000 psi
- BASEMENT FOUNDATION WALL DESIGN BASED ON:
  - 9' OR 10' HEIGHT (AS NOTED ON PLANS) - TALLER WALLS MUST BE ENGINEERED.
  - NOMINAL WIDTH (9 ½" FOR 10" THICK WALL).
- BASEMENT WALL DESIGN IS BASED ON 60 PCF BACKFILL SOIL TYPE CLASSIFICATIONS (SC, ML-CL, OR CL).
- BASEMENT WALLS SHALL BE BRACED, PRIOR TO BACKFILLING, BY ADEQUATE TEMPORARY BRACING OR INSTALL 1st FLOOR DECK.
- PROVIDE (2) #5 BARS AROUND ALL SIDES OF OPENINGS IN CONCRETE BSMT. FND. WALL WITH 2" CLEAR. REINFORCEMENT SHALL EXTEND 12" PAST CORNER OF OPENING IN ALL DIRECTIONS.
  - FOR OPENINGS UP TO 36", PROVIDE MINIMUM 10" CONCRETE DEPTH OVER OPENING OR (3)2x10 w/ (2)2x6 JACK STUDS, U.N.O.
  - LARGER OPENINGS SHALL BE PER PLAN.
- ALL CONCRETE EXPOSED TO THE WEATHER SHALL NOT HAVE LESS THAN 5% OR MORE THAN 7% AIR ENTRAINMENT.
- ALL FOOTINGS SHALL BEAR AT LEAST 12" BELOW FINISH GRADE.
- FOOTINGS AND SLABS ON GRADE SHALL BEAR ON VIRGIN SOIL OR 95% COMPACTED FILL.
- PROVIDE CONTROL JOINTS AT ALL INSIDE CORNERS OF SLAB EDGES, AND OTHER LOCATIONS WHERE SLAB CRACKS ARE LIKELY TO DEVELOP.
  - JOINTS SHALL BE LOCATED @ 10'-0" O.C. (RECOMMENDED) OR 15'-0" O.C. (MAXIMUM)
  - JOINT GRID PATTERN SHALL BE AS CLOSE TO SQUARES AS POSSIBLE (1:1 RATIO), WITH A MAXIMUM OF 1:1.5 RATIO
  - CONTROL JOINTS SHALL NOT BE INSTALLED IN STRUCTURAL SLABS
- CONCRETE MASONRY UNITS (CMU) SHALL BE ASTM C90 WITH A MIN. COMPRESSIVE STRENGTH OF 1900 psi (F'm=1500 psi). MORTAR SHALL BE ASTM C270, TYPE S. CMU DESIGN PER ACI 530 & 530.1.
- CMU FOUNDATION WALLS SHALL HAVE 'DUR-O-WALL' HORIZONTAL JOINT REINFORCEMENT (OR EQUAL) - 9 GA. MINIMUM @ 16" O.C.
- PROVIDE 2x6 (MIN.) x 16" LONG P.T. PLATE ON TOP OF ALL CRAWL SPACE PIERS. ALL PIERS SHALL BE FASTENED PER ANCHORAGE SPECIFICATIONS NOTED ABOVE. TOP 2 COURSES (MIN.) OF PIER TO BE GROUTED SOLID (8 COURSE MAX. PIER HEIGHT).
- PROVIDE 2x6 P.T. PLATE ON INTERIOR CRAWL SPACE WALLS, FASTENED PER ANCHORAGE SPECIFICATION NOTED ABOVE. TOP 2 COURSES (MIN.) OF WALL TO BE GROUTED SOLID (8 COURSE MAX. WALL HEIGHT)
- DIMENSIONS BY OTHERS, BUILDER TO VERIFY.
- BUILDER TO VERIFY THAT MODEL HAS BEEN ADEQUATELY TREATED BY A LICENSED AND BONDED PEST CONTROL COMPANY FOR SUBTERRANEAN TERMITES. METHOD AND TYPE OF TREATMENT TO BE DETERMINED BY PEST CONTROL COMPANY.

GENERAL STRUCTURAL NOTES

- DESIGN IS BASED ON 2018 NORTH CAROLINA STATE BUILDING CODE: RESIDENTIAL CODE.
- WOOD FRAME ENGINEERING IS BASED ON NDS, "NATIONAL DESIGN SPECIFICATION FOR WOOD CONSTRUCTION" - LATEST EDITION.
- DESIGN LOADS:
  - ROOF: DEAD = 7 PSF T.C., 10 PSF B.C.; LIVE = 16 PSF; LOAD DURATION FACTOR = 1.25
  - FLOOR: LIVE = 40 PSF (30 PSF @ SLEEPING AREAS); DEAD = 10 PSF (I-JOISTS & SOLID SAWN); 10 PSF T.C., 5 PSF B.C. (TRUSSES); (ADD'L 10 PSF @ TILE)
  - LATERAL: 120 MPH, EXPOSURE B. SEISMIC A/B.
  - SOIL: 2,000 PSF ASSUMED ALLOWABLE BEARING PRESSURE (TO BE VERIFIED BY BUILDER)

GENERAL FRAMING

- ALL TYP. NAIL FASTENER REQUIREMENTS ARE NOTED IN STANDARD CONNECTIONS TABLE OR ON PLANS. ALL NAILS SPECIFIED ARE MIN DIAMETER AND LENGTH REQUIRED FOR CONNECTION. ALL HANGER NAILS SHALL BE INSTALLED PER MANUFACTURER'S REQUIREMENTS FOR MAX CHARTED CAPACITY. NOTE: HANGERS USE COMMON NAIL DIAMETERS NOT TYPICAL FRAMING GUN NAILS.
- REFER TO FASTENING SCHEDULE TABLE R602.3(1) FOR ALL CONNECTIONS, TYP. U.N.O.
- EXT. & INT. BRG WALLS SHALL BE 2x4 OR 2x6 (AS SHOWN ON PLANS) @ 16" O.C. SPF OR SYP "STUD" GRADE LUMBER, OR BETTER, U.N.O.
  - WALLS OVER 12' TALL SHALL BE PER PLAN.
- ALL HEADERS, BEAMS & OTHER STRUCTURAL MEMBERS SHALL BE SPRUCE-PINE-FIR #2 (SPF) OR SOUTHERN PINE #2 (SYP) LUMBER, OR BETTER (KILN-DRIED). ALL HEADERS HAVE BEEN DESIGNED BASED ON CALCULATED LOADS & SIZED ACCORDINGLY. CODE TABLES HAVE NOT BEEN USED.
- ALL NON-BEARING INTERIOR STUD WALLS SHALL BE CONSTRUCTED WITH 2x 'STUD' GRADE MEMBERS SPACED @ 16" O.C. (MAX., U.N.O.)
  - HEADERS IN NON-LOAD BEARING WALLS SHALL BE: (1)2x4/6 FLAT @ OPENINGS UP TO 4', (2)2x4/6 FLAT UP TO 8'.
- ALL FRAMING LUMBER SHALL BE DRIED TO 15% MC (KD-15).
- ENGINEERED LUMBER BEAMS TO MEET OR EXCEED THE FOLLOWING:
  - 'LSL' - Fb=2325 psi; Fv=310 psi; E=1.55x10^6 psi
  - 'LVL' - Fb=2600 psi; Fv=285 psi; E=2.0x10^6 psi
  - 'PSL' - FB=2900 PSI; FV=290 PSI; E=2.0X10^6 PSI
- M+K SHALL BE FULLY INDEMNIFIED FOR ANY AND ALL ISSUES RESULTING FROM OR RELATED TO ANY BUILDING COMPONENT IF THE OWNER DOES NOT SUBMIT THE COMPONENT SHOP DRAWINGS TO M+K FOR STRUCTURAL REVIEW PRIOR TO FABRICATION, DELIVERY, OR INSTALLATION.
- FOR 2 & 3 PLY BEAMS OF EQUAL WIDTH, FASTEN PLIES TOGETHER WITH 3 ROWS OF 3"x0.120" NAILS @ 8" O/C OR 2 ROWS ¼"x3½" SIMPSON SDS SCREWS (OR 3½" TRUSSLOK SCREWS) @ 16" O/C. USE A MINIMUM OF 3 ROWS FOR BEAM DEPTHS OF 14" OR GREATER. APPLY FASTENING AT BOTH FACES FOR 3-PLY CONDITION. LOCATE TOP & BOTTOM NAILS/SCREWS 2" FROM EDGE. SOLID 3 ½" OR 5 ¼" BEAMS ARE ACCEPTABLE. USE 2 ROWS OF NAILS FOR 2x6 & 2x8 MEMBERS.
- FOR 4 PLY BEAMS OF EQUAL WIDTH, FASTEN PLIES TOGETHER WITH 3 ROWS OF ¼"x6" SIMPSON SDS SCREWS (OR 6 ¾" TRUSSLOK SCREWS) @ 16" O/C. USE A MINIMUM OF 4 ROWS FOR BEAM DEPTHS OF 14" OR GREATER. APPLY FASTENING AT BOTH FACES (ONE SIDE ONLY FOR TRUSSLOK SCREWS). LOCATE TOP AND BOTTOM SCREWS 2" FROM EDGE. A SOLID 7" BEAM IS ACCEPTABLE.
- ALL HEADERS SHALL BE SUPPORTED BY (1)2x JACK STUD & (1)2x KING STUD, MINIMUM.
  - THE NUMBER OF STUDS SPECIFIED AT A SUPPORT INDICATES THE NUMBER OF JACK STUDS REQUIRED, U.N.O..
- ALL MULTI-PLY STUDS TO BE FASTENED TOGETHER w/ 3"X0.131" NAILS @ 24" O.C. (MIN.), EACH PLY.
- PROVIDE SOLID BLOCKING IN FLOOR SYSTEM UNDER ALL POSTS CONTINUOUS TO FND./BEARING. BLOCKING TO MATCH POST ABOVE.
- FASTEN 2x WOOD PLATES TO TOP FLANGE OF STEEL BEAMS WITH P.A.F.'s ('HILTI' X-CF PINS OR EQUAL) @ 16" O.C. STAGGERED, OR 1/2" DIA. BOLTS @ 48" O.C. STAGGERED.
- ALL EXTERIOR 4x4 WOOD POSTS SHALL HAVE SIMPSON BCS2-2/4 CAP & ABW44Z BASE, U.N.O.

FLOOR FRAMING

- I-JOISTS/TRUSSES SHALL BE DESIGNED BY MANUF. TO MEET OR EXCEED L/480 LIVE LOAD DEFLECTION CRITERIA. (EXCLUDES MARBLE FLOORS - CONTACT M&K FOR MARBLE FLOOR DESIGNS)
- AT I-JOIST FLOORS, PROVIDE 1 1/8" MIN. OSB RIM BOARD.
- METAL HANGERS SHALL BE SPECIFIED BY MANUFACTURER, U.N.O.
- FLOOR SHEATHING SHALL BE 23/32" A.P.A. RATED 'STURD-I-FLOOR' 24" O.C, EXPOSURE 1 (OR APPROVED EQUAL) WITH TONGUE AND GROOVE EDGES. FASTEN TO FRAMING MEMBERS W/ GLUE AND
  - 2 ½" x 0.131" NAILS @ 6"o.c. @ PANEL EDGES & @ 12"o.c. FIELD.
  - 2 ⅜" x 0.120" NAILS @ 4" O.C. @ PANEL EDGES & @ 8" O.C. FIELD.
  - 2 ⅜" x 0.113" NAILS @ 3" O.C. @ PANEL EDGES & @ 6" O.C. IN FIELD.
  - #6 x 2" MIN. SCREWS @ 6" O.C. @ PANEL EDGES & @ 12" O.C. FIELD.

ROOF FRAMING

- BAY WINDOWS & SHED ROOFS (UP TO 6' SPAN) CAN BE 2x4 OR 2x6 RAFTERS & CEILING JOISTS @ 16/24" O.C.
- FASTEN EACH ROOF TRUSS TO TOP PLATE W/ SIMPSON H2.5T CLIP (OR APPROVED EQUAL) @ ALL BEARING POINTS. PROVIDE (2) H2.5T CLIPS AT 2-PLY GIRDER TRUSSES, (3) H2.5T CLIPS AT 3-PLY GIRDER TRUSSES & ROOF BEAMS - AT ALL BEARING POINTS.
- METAL HANGERS SHALL BE SPECIFIED BY THE MANUFACTURER, U.N.O.
- ERECT AND INSTALL ROOF TRUSSES PER WTCA & TPI'S BCSI 1-08 "GUIDE TO GOOD PRACTICE FOR HANDLING, INSTALLING & BRACING OF METAL PLATE CONNECTED WOOD TRUSSES."
- SUPPORT PORCH & SHORT SPAN ROOF TRUSSES (MAX 7' SPAN) w/ 2x4 LEDGER FASTENED TO:
  - RIM BOARD w/ (2) 3"x0.131" NAILS @ 16" O.C. MAX. (I-JOISTS)
  - TRUSS VERTICALS w/ (3) 3"x0.131" NAILS @ 19.2" O.C. MAX. (FLOOR TRUSSES)
- ROOF SHEATHING SHALL BE 7/16" A.P.A. RATED SHEATHING 24/16 EXPOSURE 1 (OR APPROVED EQUAL). FASTEN TO FRAMING MEMBERS
  - w/ 2 ½" x 0.131" NAILS @ 6"o.c. @ PANEL EDGES & @ 12" O.C. FIELD.
  - w/ 2 ⅜" x 0.120" NAILS @ 4"o.c. @ PANEL EDGES & @ 8" O.C. FIELD.
  - w/ 2 ⅜" x 0.113" NAILS @ 3"o.c. @ PANEL EDGES & @ 6" O.C. FIELD.

HOLD-DOWN SCHEDULE

SYMBOL	SPECIFICATION
HD-1	SIMPSON HTT4 HOLD-DOWN * (⅝" DIA. ANCHOR)
HD-2	SIMPSON MSTC66 STRAP TIE (CENTER STRAP ON FLOOR SYSTEM U.N.O.) -OR- MSTC66B3 ALTERNATE
HD-3	SIMPSON STHD14/STHD14RJ

* UTILIZE THE SSTB24 ANCHOR BOLT @ ALL MONOSLAB & INTERIOR RAISED SLAB (I.E. THICKENED SLABS, FOOTINGS) CONDITIONS. MINIMUM 24" MIN. FOOTING THICKNESS REQUIRED.
EPOXY-SET ALTERNATE FOR MONOSLAB & INTERIOR RAISED SLAB CONDITIONS ONLY: UTILIZE SIMPSON 'SET' EPOXY SYSTEM TO FASTEN THREADED ROD INTO CONCRETE FOUNDATION. PROVIDE 10" (FOR 5/8" DIA.) OR 15" (FOR 7/8" DIA.) MIN. EMBEDMENT INTO CONCRETE.
INSTALL PER MANUF. INSTRUCTIONS. MINIMUM 16" FOOTING THICKNESS REQ'D.
DO NOT LOCATE ANCHORS WITHIN 1 3/4" OF EDGE OF CONCRETE.

LEGEND

- INTERIOR BEARING WALL
- BEARING WALL ABOVE
- BEAM / HEADER
- INDICATES SHEAR WALL & EXTENT
- EXTENT OF OVERFRAMING
- METAL HANGER
- * INDICATES POST ABOVE. PROVIDE SOLID BLOCKING UNDER POST OR JAMB ABOVE.
- INDICATES HOLD-DOWN OR STRAP. REFER TO SCHEDULE.

NON-BEARING HEADER SCHEDULE

SPAN	2x4 NON-BEARING PARTITION WALL	2x6 NON-BEARING PARTITION WALL
UP TO 3'-0"	(1)2x4 FLAT	(1)2x6 FLAT
UP TO 6'-0"	(2)2x4	(3)2x4
UP TO 8'-0"	(2)2x6	(3)2x6
UP TO 12'-0"	(2)2x8	(3)2x8

NOTES:
- ALL NON-BEARING INTERIOR STUD WALLS SHALL BE CONSTRUCTED WITH 2x 'STUD' GRADE MEMBERS SPACED @ 24" O.C. (MAX.)

LATERAL BRACING & SHEAR WALL SHEATHING SPECIFICATIONS

THIS MODEL HAS BEEN DESIGNED TO RESIST LATERAL FORCES RESULTING FROM:

120 MPH WIND IN 2018 NCSBC:RC

(120 MPH WIND SPEED IN ASCE 7-10 WIND MAP, PER IRC R301.2.1.1) EXP. B, RISK CAT. 2 & SEISMIC CAT. A/B.

THE DESIGN WAS COMPLETED PER 2015 IBC (SECTION 1609) & ASCE 7-10, AS PERMITTED BY R301.1.3 OF THE 2018 NCSBC:RC, OR THE SIMPLIFIED PRESCRIPTIVE PROCEDURE IN ACCORDANCE WITH THE 2015 IRC IF THE PARAMETERS OF SECTION R602.12 COMPLY. ACCORDINGLY, THIS MODEL, AS DOCUMENTED AND DETAILED HEREWITHIN, IS ADEQUATE TO RESIST THE CODE REQUIRED LATERAL FORCES.

DESIGN WIND UPLIFT LOADS HAVE BEEN CALCULATED UTILIZING ASCE 7-10 (ACCEPTED ENGINEERING PRACTICE) AS ALLOWED PER 2018 NCSBC:RC SECTION R802.11.1.1. THIS MODEL HAS BEEN DETAILED WHERE REQUIRED & ENGINEERED TO RESIST THE WIND UPLIFT LOAD PATH PER SECTIONS R602.3.5& R802.11.

EXT. WALL SHEATHING SPECIFICATION

- 7/16" OSB OR 15/32" PLYWOOD:
  FASTEN SHEATHING w/ 2 ⅜"x0.113" NAILS @ 6" O.C. AT EDGES & @ 12" O.C. IN THE PANEL FIELD. TYP, U.N.O.
- HORIZONTAL BLOCKING OF EXT. WALL/SHEAR WALL PANEL EDGES IS NOT REQUIRED BY THIS DESIGN EXCEPT FOR THOSE AREAS SPECIFICALLY NOTED.
- ALL EXT. WALLS SHALL BE CONTINUOUSLY SHEATHED AND ARE CONSIDERED SHEAR WALLS.
- ALT. STAPLE CONNECTION SPEC: 1 ½" 16 GA STAPLES (7/16" CROWN) @ 3" O.C. AT EDGES & @ 6" O.C IN FIELD.

BLOCKED PANEL EDGES

- AT DESIGNATED AREAS - FASTEN SHEATHING w/ 2 ⅜" x 0.113" NAILS @ 6" O.C. AT ALL PANEL EDGES AND 12" O.C. IN THE PANEL FIELD OR 1 ¾" 16 GA STAPLES (7/16" CROWN) @ 3" O.C. AT EDGES & @ 6" O.C IN FIELD. ALL SHEATHING PANELS SHALL BE ORIENTED AND INSTALLED FULL HEIGHT OF SHEAR WALL OR 2x HORIZONTAL BLOCKING SHALL BE PROVIDED TO SUPPORT ALL UNSUPPORTED PANEL EDGES & EDGE FASTENING.

3" O.C. EDGE NAILING

- AT DESIGNATED AREAS - FASTEN PANEL EDGES OF WOOD STRUCTURAL WALL SHEATHING TO FRAMING w/ 8d NAILS @ 3" O.C. NO STAPLE ALTERNATIVE AVAILABLE AT THIS SPEC. ALL SHEATHING PANELS SHALL BE ORIENTED AND INSTALLED FULL HEIGHT OF SHEAR WALL OR 2x HORIZONTAL BLOCKING SHALL BE PROVIDED TO SUPPORT UNSUPPORTED PANEL EDGES AND 3" O.C. EDGE FASTENING.

NOTES

- SEE CONNECTION SPECIFICATIONS CHART FOR STANDARD SHEAR TRANSFER DETAILING. IF ADDITIONAL CAPACITY IS REQUIRED BY DESIGN, IT WILL BE SPECIFICALLY NOTED ON PLAN.
- DESIGN ASSUMES 16" O.C MAX. STUD SPACING, U.N.O.
- ALL STRUCTURAL PANELS ARE TO BE DIRECTLY APPLIED TO STUD FRAMING.
- PRE-MANUFACTURED PANELIZED WALLS: FASTEN TOGETHER END STUDS OF WALL PANELS SHEATHED w/ OSB OR PLYWOOD w/ 3" x 0.120" NAILS @ 4" O.C. (THRU ONE SIDE ONLY)

INDICATES EXTENT OF INT. OSB SHEARWALL OR 3" O.C. OSB SHEARWALL.

INDICATES HOLDOWN BELOW

VENEER LINTEL SCHEDULE

SPAN (MAX)	HEIGHT OF VENEER ABOVE LINTEL	STEEL ANGLE SIZE
3'-0"	20 FT. MAX	L3"x3"x¼"
6'-0"	3 FT. MAX	L3"x3"x¼"
	12 FT. MAX	L4"x3"x¼"
	20 FT. MAX	L5"x3½"x5/16"
8'-0"	3 FT. MAX	L4"x4"x¼" *
	12 FT. MAX	L5"x3½"x5/16"
	16 FT. MAX	L6"x3½"x⅜"
9'-6"	12 FT. MAX	L6"x3½"x5/16"
16'-0"	2 FT. MAX	L7"x4"x½" **
	3 FT. MAX	L8"x4"x½" **

ALL LINTELS:
- SHALL SUPPORT 2 ⅝" - 3 ½" VENEER w/ 40 psf MAXIMUM WEIGHT.
  < 16' SHALL HAVE 4" MIN. BEARING
  >= 16' SHALL HAVE 8" MIN. BEARING
  < 16' SHALL NOT BE FASTENED BACK TO HEADER.
  >= 16' SHALL BE FASTENED BACK TO WOOD HEADER IN WALL @48"o.c. w/ ½" DIA. x 3 ½" LONG LAG SCREWS IN 2" LONG VERTICALLY SLOTTED HOLES.
- MAX. VENEER HT. APPLIES TO ANY PORTION OF BRICK OVER THE OPENING.
- ALL LINTELS SHALL BE LONG LEG VERTICAL.
- WHEN SUPPORTING VENEER < 3" WIDE THE EXTERIOR TOE OF THE HORIZONTAL LEG MAY BE CUT IN THE FIELD TO BE 3 ¼" WIDE OVER THE BEARING LENGTH ONLY. THIS IS TO ALLOW FOR MORTAR JOINT FINISHING.
- SEE STRUCTURAL PLANS FOR ANY LINTEL CONDITION NOT ENCOMPASSED BY THE ABOVE PARAMETERS. FOR ANY LINTEL FASTENED BACK TO BEAM, FASTENERS SHALL MAINTAIN A 2½" (MINIMUM) CLEAR DISTANCE FROM BOTTOM OF BEAM.

* FOR QUEEN VENEER USE L4x3x¼".
** FOR 3½" VENEER ONLY. SEE PLAN FOR VENEER SUPPORT IF VENEER < 3½" THICK.

ENGINEERED BEAM MATERIAL SCHEDULE

BEAM NUMBER	LVL OPTION	PSL OPTION	LSL OPTION	FLITCH OPTION	STEEL OPTION
001	(2)1¾"x14" - F	3½"x14" - F	(2)1¾"x14" - F	(2)2x12 + (1)¼"x11¼" STEEL FLITCH PLATES - FB	W12x14 - F
002	(2)1¾"x14" - F	3½"x14" - F	(2)1¾"x14" - F	(2)2x12 + (1)¼"x11¼" STEEL FLITCH PLATES - FB	W12x14 - F
003	(3)1¾"x18" - FB or (2)1¾"x20" - FB	5¼"x18" - FB	N/A	(3)2x12 + (2) ⅜"x11¼" STEEL FLITCH PLATES - FB	W12x26 - F
004	(2)1¾"x14" - F	3½"x14" - F	(2)1¾"x14" - F	(2)2x12 + (1)¼"x11¼" STEEL FLITCH PLATES - FB	W12x14 - F
005	(2)1¾"x11⅞" - H cont.	3½"x11⅞" - H cont.	(2)1¾"x11⅞" - H cont.	(3)2x12 + (2)¼"x11⅞" STEEL FLITCH PLATES - H cont.	N/A
005A	(3)1¾"x14" - H cont.	5¼"x14" - H cont.	N/A	(3)2x12 + (2)¼"x11⅞" STEEL FLITCH PLATES - H cont.	N/A
006	(1)1¾"x14" - F	3½"x14" - F	(2)1¾"x14" - F	(2)2x12 + (1)¼"x14" STEEL FLITCH PLATES - FB	W12x14 - F
007	(2)1¾"x11⅞" - D	3½"x11⅞" - D	(2)1¾"x11⅞" - D	(2)2x12 + (1)¼"x11¼" STEEL FLITCH PLATES - D	W10x12 - D
008	(2)1¾"x16" - H cont.	3½"x16" - H cont.	(3)1¾"x16" - H cont.	(3)2x12 + (2)½"x11¼" STEEL FLITCH PLATES - H cont.	N/A
009	(2)1¾"x9¼" - F	3½"x9¼" - F	(2)1¾"x9¼" - F	(2)2x10 + (1)¼"x9¼" STEEL FLITCH PLATES - F	W8x10 - F
010	(2)1¾"x14" - F	3½"x14" - F	(2)1¾"x14" - F	(2)2x12 + (1)¼"x11¼" STEEL FLITCH PLATES - FB	W12x14 - F
011	(2)1¾"x14" - F	3½"x14" - F	(2)1¾"x14" - F	(2)2x12 + (1)¼"x11¼" STEEL FLITCH PLATES - FB	W12x14 - F
012	(2)1¾"x11⅞" - D	3½"x11⅞" - D	(2)1¾"x11⅞" - D	(2)2x12 + (1)¼"x11¼" STEEL FLITCH PLATES - D	W10x12 - D

- BEAM NOTATION:
  - "F" INDICATES FLUSH BEAM
  - "FT" INDICATES FLUSH TOP BEAM
  - "FB" INDICATES FLUSH BOTTOM BEAM
  - "D" INDICATES DROPPED BEAM
  - "H" INDICATES DROPPED OPENING HEADER
- REFER TO DETAIL D/SD2.0 FOR TYPICAL FLITCH BEAM CONNECTIONS
- REFER TO DETAIL E/SD2.0 FOR TYPICAL STEEL BEAM CONNECTIONS
- FOR FLUSH TOP BEAMS PROVIDE 2X STACKED PLATES BENEATH BEAM AS REQ'D. FASTEN PLATES IN SUCCESSION W/ (2) 3"X0.120" NAILS @ 8" O.C.
- FOR FLUSH BOTTOM BEAMS PROVIDE 2x STACKED PLATES ATOP BEAM AS REQ'D. FASTEN PLATES IN SUCCESSION w/ (2) 3"x0.120" NAILS @ 8" O.C.

SD2.1 REFERS TO SD2.1A FOR LVL/PSL/LSL BEAMS OR SD2.1B FOR FLITCH BEAMS OR SD2.1C FOR STEEL BEAMS

seal: 7/14/25

NORTH CAROLINA PROFESSIONAL SEAL 036012 ENGINEER JOSEPH T. RICKER

© copyright : MULHERN & KULP Structural Engineering, Inc.

MULHERN+KULP
RESIDENTIAL STRUCTURAL ENGINEERING
300 Brookside Ave, Building 4 ▸ Ambler, PA 19002
p 215-646-8001 ▸ mulhernkulp.com
NC LIC. #C-3825

M&K project number: 126-23061

project mgr: JTR
drawn by: GTK
issue date: 07-14-25

REVISIONS:
date: initial:

DRB HOMES

STRUCTURAL NOTES
BLAKE POND COMMUNITY
LOT 110 - DRAYTON 2
RALEIGH, NC

sheet: S0.0

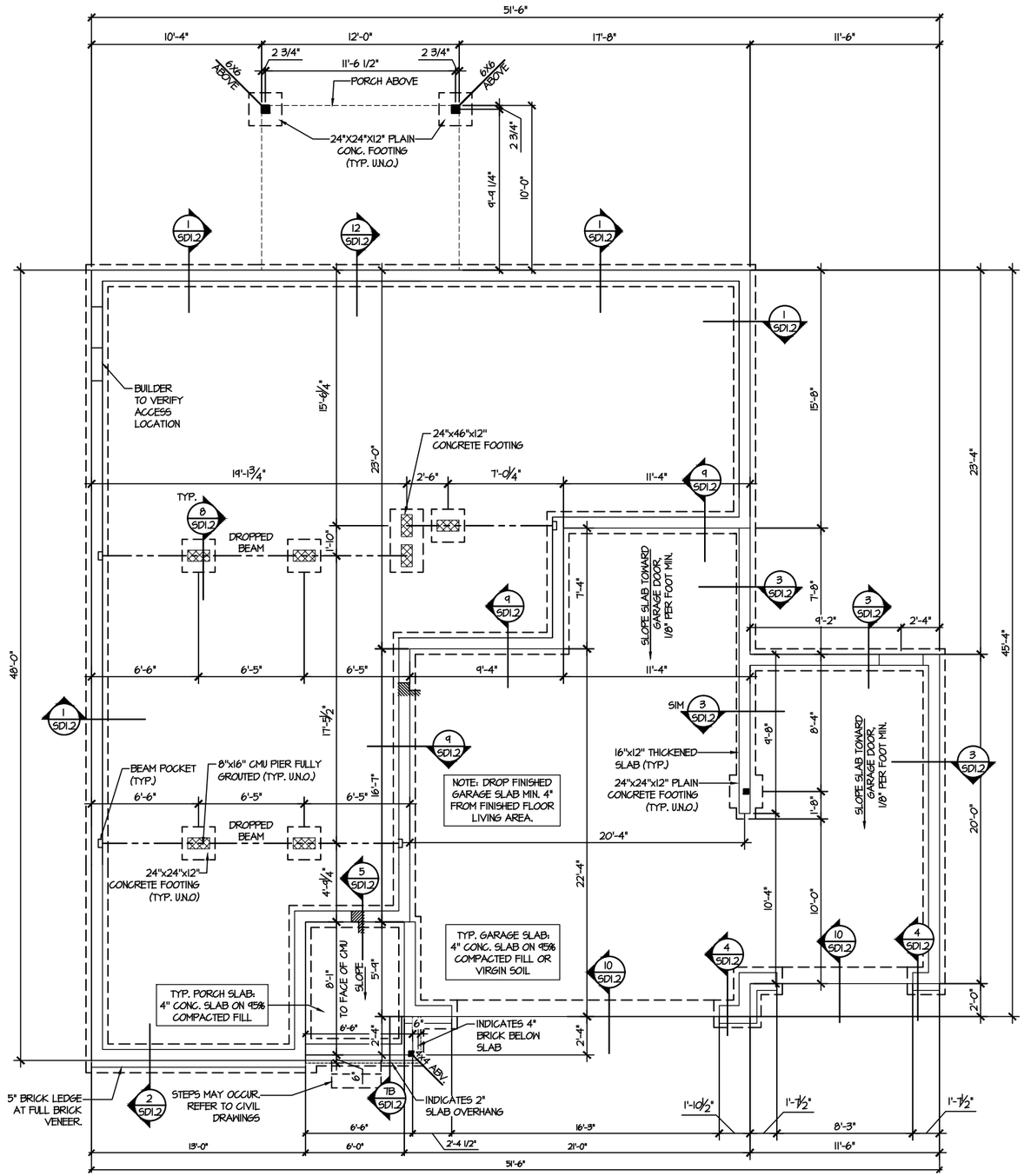

1 CRAWL SPACE FOUNDATION PLAN

SCALE: 1/8"=1'-0"

LEGEND

- INTERIOR BEARING WALL
- BEARING WALL ABOVE
- BEAM / HEADER
- INDICATES SHEAR WALL & EXTENT
- EXTENT OF OVERFRAMING
- JL METAL HANGER
- * INDICATES POST ABOVE. PROVIDE SOLID BLOCKING UNDER POST OR JAMB ABOVE.
- INDICATES HOLD-DOWN OR STRAP. REFER TO SCHEDULE.

REFER TO S0.0 FOR TYPICAL STRUCTURAL NOTES & SCHEDULES

seal: 7/14/25

NORTH CAROLINA PROFESSIONAL SEAL 086012 ENGINEER JOSEPH T. RICKER

© copyright : MULHERN & KULP Structural Engineering, Inc.

MULHERN+KULP
RESIDENTIAL STRUCTURAL ENGINEERING
300 Riverside Ave, Building 1 - Jenkintown, PA 19046
p: 215.576.0001 - mulhern-kulp.com
NC LIC. #C-3825

M&K project number: 126-23061

project mgr: JTR
drawn by: GTK
issue date: 07-14-25

REVISIONS:
date: initial:

DRB HOMES

FOUNDATION PLANS
BLAKE POND COMMUNITY
LOT 110 - DRAYTON 2
RALEIGH, NC

sheet: S1.0

FILE: RLH - Blake Pond - Lot 110 - Structurals DATE: 7/14/2025 1:08 PM

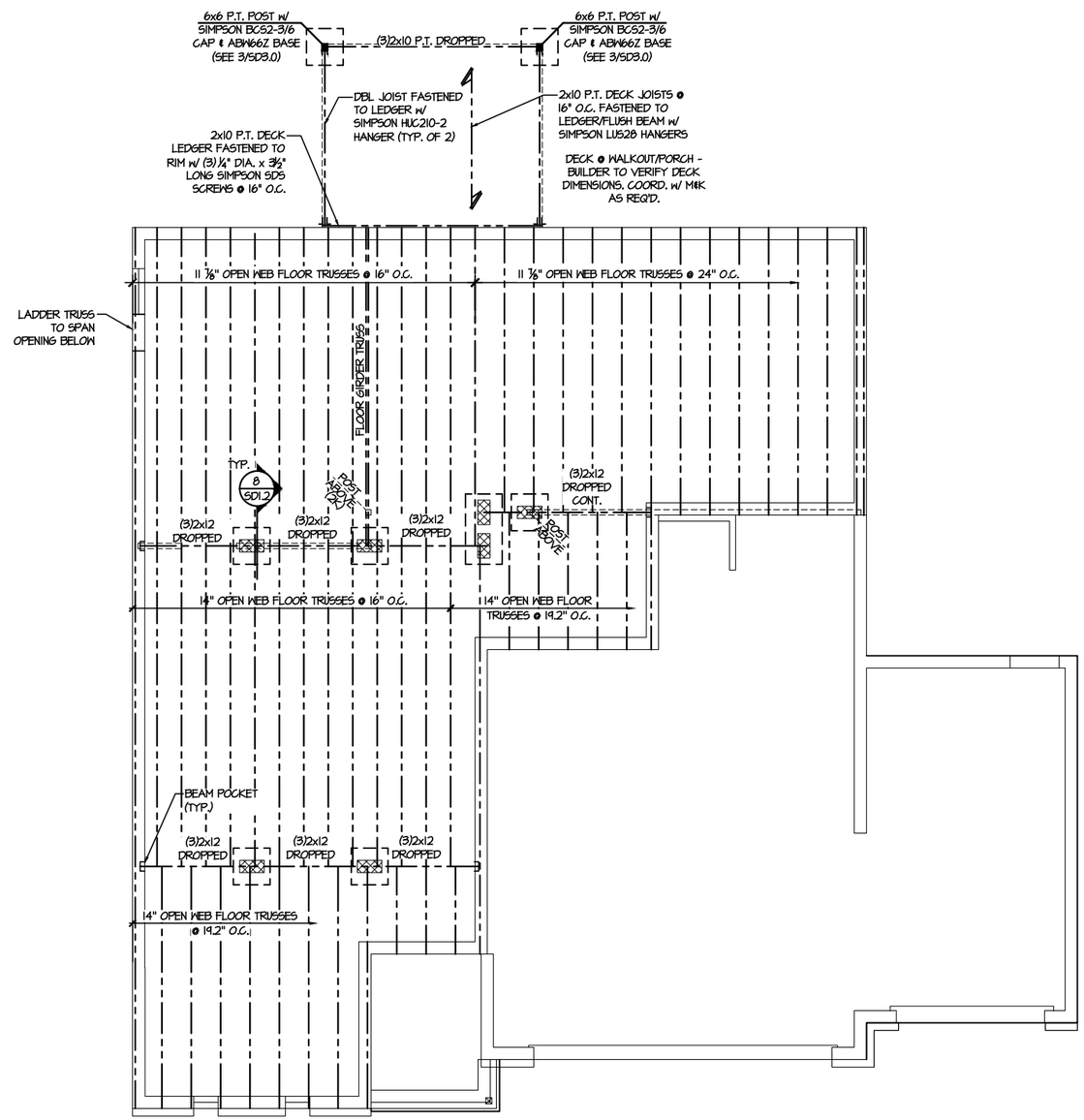

1 1ST FLOOR FRAMING PLAN
SCALE: 1/8"=1'-0"

LEGEND

- INTERIOR BEARING WALL
- BEARING WALL ABOVE
- BEAM / HEADER
- INDICATES SHEAR WALL & EXTENT
- EXTENT OF OVERFRAMING
- METAL HANGER
- * INDICATES POST ABOVE. PROVIDE SOLID BLOCKING UNDER POST OR JAMB ABOVE.
- INDICATES HOLD-DOWN OR STRAP. REFER TO SCHEDULE.

REFER TO S0.0 FOR TYPICAL STRUCTURAL NOTES & SCHEDULES

seal: 7/14/25

NORTH CAROLINA PROFESSIONAL SEAL 036012 ENGINEER JOSEPH T. RICKER

© Copyright : MULHERN & KULP Structural Engineering, Inc.

MULHERN+KULP
RESIDENTIAL STRUCTURAL ENGINEERING
300 Riverside Ave, Building 1 - Jenkintown, PA 19046
p: 215.576.0201 - mulhern-kulp.com
NC LIC. #C-3825

M&K project number: 126-23061

project mgr: JTR
drawn by: GTK
issue date: 07-14-25

REVISIONS:

date:	initial:

DRB HOMES

FLOOR FRAMING PLANS

BLAKE POND COMMUNITY
LOT 110 - DRAYTON 2
RALEIGH, NC

sheet: S2.0

FILE: RLH - Blake Pond - Lot 110 - Structurals DATE: 7/14/2025 1:08 PM

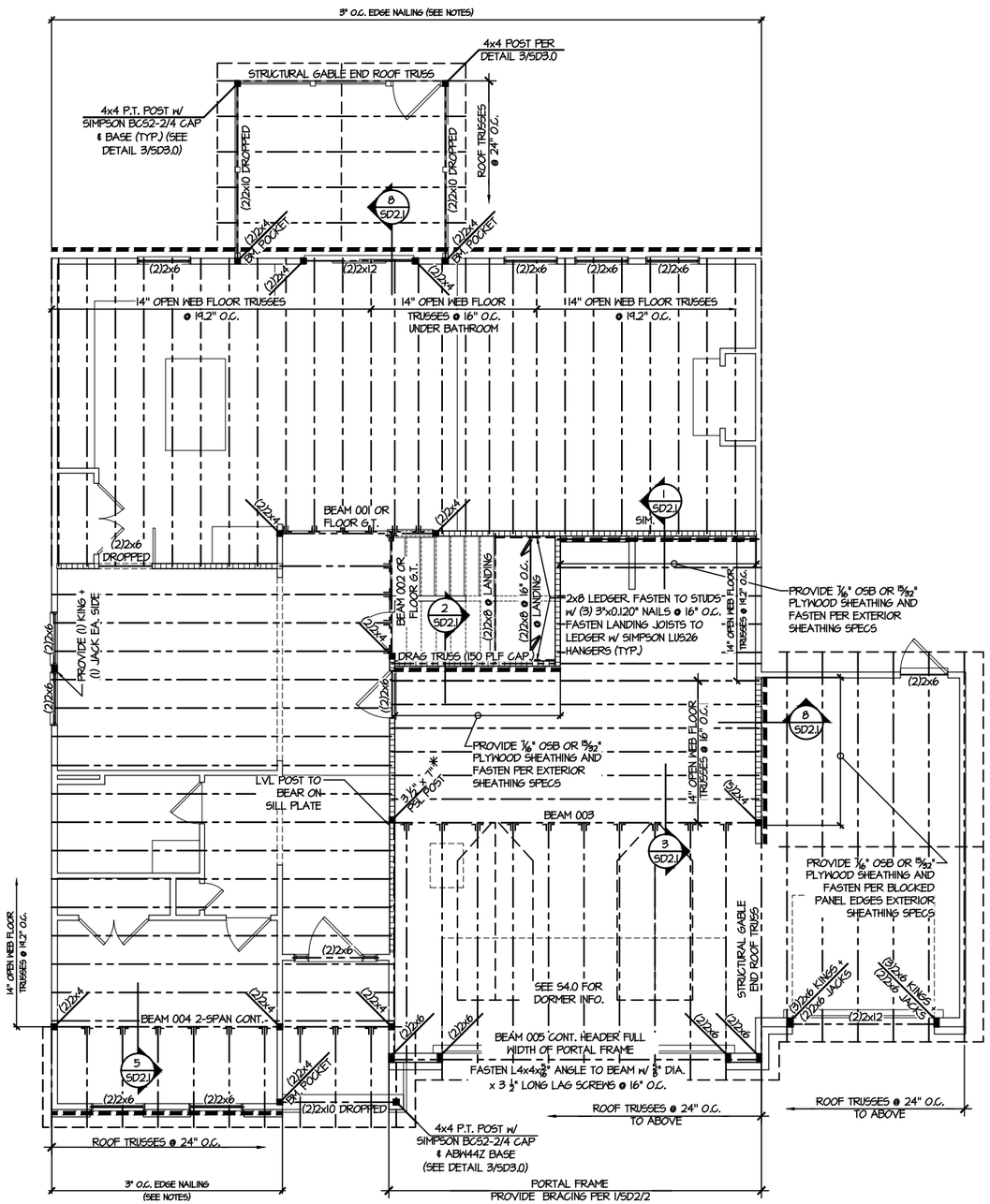

1 2ND FLOOR FRAMING PLAN

SCALE: 1/8"=1'-0"

SD2.1 REFERS TO SD2.1A FOR LVL/PSL/LSL BEAMS OR SD2.1B FOR FLITCH BEAMS OR SD2.1C FOR STEEL BEAMS

REFER TO S0.0 FOR TYPICAL STRUCTURAL NOTES & SCHEDULES

LEGEND

- INTERIOR BEARING WALL
- BEARING WALL ABOVE
- BEAM / HEADER
- INDICATES SHEAR WALL & EXTENT
- EXTENT OF OVERFRAMING
- METAL HANGER
- * INDICATES POST ABOVE. PROVIDE SOLID BLOCKING UNDER POST OR JAMB ABOVE.
- INDICATES HOLD-DOWN OR STRAP. REFER TO SCHEDULE.

ENGINEERED BEAM MATERIAL SCHEDULE

BEAM NUMBER	LVL OPTION	PSL OPTION	LSL OPTION	FLITCH OPTION	STEEL OPTION
001	(2)1 3/4"x14" - F	3 1/2"x14" - F	(2)1 3/4"x14" - F	(2)2x12 + (1) 1/4"x11 7/8" STEEL FLITCH PLATES - FB	W12x14 - F
002	(2)1 3/4"x14" - F	3 1/2"x14" - F	(2)1 3/4"x14" - F	(2)2x12 + (1) 1/4"x11 7/8" STEEL FLITCH PLATES - FB	W12x14 - F
003	(3)1 3/4"x18" - FB or (2)1 3/4"x20" - FB	5 1/4"x18" - FB	N/A	(3)2x12 + (2) 3/8"x11 7/8" STEEL FLITCH PLATES - FB	W12x26 - F
004	(2)1 3/4"x14" - F	3 1/2"x14" - F	(2)1 3/4"x14" - F	(2)2x12 + (1) 1/4"x11 7/8" STEEL FLITCH PLATES - FB	W12x14 - F
005	(2)1 3/4"x11 7/8" - H cont.	3 1/2"x11 7/8" - H cont.	(2)1 3/4"x11 7/8" - H cont.	(3)2x12 + (2) 1/4"x11 7/8" STEEL FLITCH PLATES - H cont.	N/A
005A	(3)1 3/4"x14" - H cont.	5 1/4"x14" - H cont.	N/A	(3)2x12 + (2) 1/4"x11 7/8" STEEL FLITCH PLATES - H cont.	N/A
006	(1)1 3/4"x14" - F	3 1/2"x14" - F	(2)1 3/4"x14" - F	(2)2x12 + (1) 1/4"x14" STEEL FLITCH PLATES - FB	W12x14 - F
007	(2)1 3/4"x11 7/8" - D	3 1/2"x11 7/8" - D	(2)1 3/4"x11 7/8" - D	(2)2x12 + (1) 1/4"x11 7/8" STEEL FLITCH PLATES - D	W10x12 - D
008	(2)1 3/4"x16" - H cont.	3 1/2"x16" - H cont.	(3)1 3/4"x16" - H cont.	(3)2x12 + (2) 1/2"x11 7/8" STEEL FLITCH PLATES - H cont.	N/A
009	(2)1 3/4"x9 7/4" - F	3 1/2"x9 7/4" - F	(2)1 3/4"x9 7/4" - F	(2)2x10 + (1) 1/4"x9 7/4" STEEL FLITCH PLATES - F	W8x10 - F
010	(2)1 3/4"x14" - F	3 1/2"x14" - F	(2)1 3/4"x14" - F	(2)2x12 + (1) 1/4"x11 7/8" STEEL FLITCH PLATES - FB	W12x14 - F
011	(2)1 3/4"x14" - F	3 1/2"x14" - F	(2)1 3/4"x14" - F	(2)2x12 + (1) 1/4"x11 7/8" STEEL FLITCH PLATES - FB	W12x14 - F
012	(2)1 3/4"x11 7/8" - D	3 1/2"x11 7/8" - D	(2)1 3/4"x11 7/8" - D	(2)2x12 + (1) 1/4"x11 7/8" STEEL FLITCH PLATES - D	W10x12 - D

- BEAM NOTATION:
  - "F" INDICATES FLUSH BEAM
  - "FT" INDICATES FLUSH TOP BEAM
  - "FB" INDICATES FLUSH BOTTOM BEAM
  - "D" INDICATES DROPPED BEAM
  - "H" INDICATES DROPPED OPENING HEADER
- REFER TO DETAIL D/SD2.0 FOR TYPICAL FLITCH BEAM CONNECTIONS
- REFER TO DETAIL E/SD2.0 FOR TYPICAL STEEL BEAM CONNECTIONS
- FOR FLUSH TOP BEAMS PROVIDE 2X STACKED PLATES BENEATH BEAM AS REQ'D. FASTEN PLATES IN SUCCESSION W/ (2) 3"X0.120" NAILS @ 8" O.C.
- FOR FLUSH BOTTOM BEAMS PROVIDE 2x STACKED PLATES ATOP BEAM AS REQ'D. FASTEN PLATES IN SUCCESSION w/ (2) 3"x0.120" NAILS @ 8" O.C.

seal: 7/14/25

NORTH CAROLINA PROFESSIONAL SEAL 036012 ENGINEER JOSEPH T. RICKER

© copyright : MULHERN & KULP Structural Engineering, Inc.

MULHERN+KULP
RESIDENTIAL STRUCTURAL ENGINEERING
300 Riverside Ave, Building 1 - Jenkintown, PA 19046
P:215.576.6001 - mulhern-kulp.com
NC LIC. #C-3825

M&K project number: 126-23061

project mgr: JTR
drawn by: GTK
issue date: 07-14-25

REVISIONS:

date:	initial:

DRB HOMES

FLOOR FRAMING PLANS

BLAKE POND COMMUNITY
LOT 110 - DRAYTON 2
RALEIGH, NC

sheet: S3.0

FILE: RLH - Blake Pond - Lot 110 - Structurals DATE: 7/14/2025 1:08 PM

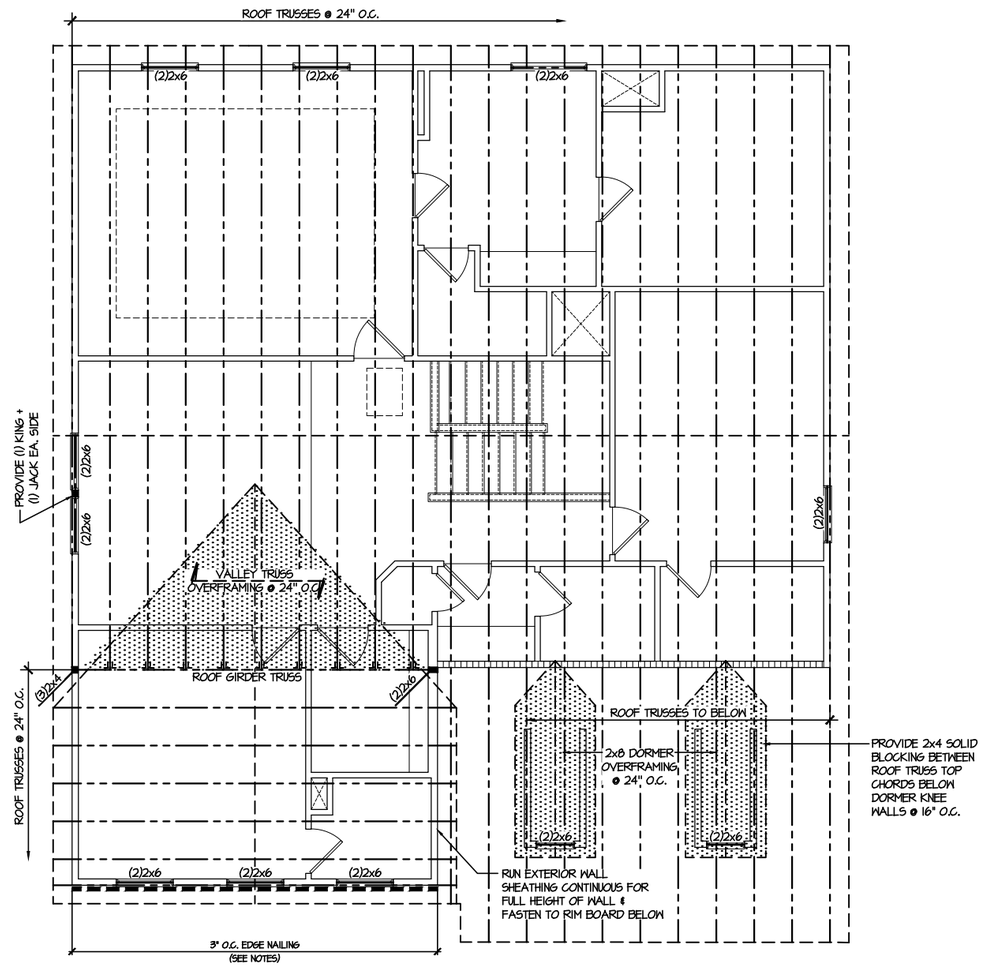

1 **ROOF FRAMING PLAN**
SCALE: 1/8"=1'-0"

LEGEND

- INTERIOR BEARING WALL
- BEARING WALL ABOVE
- BEAM / HEADER
- INDICATES SHEAR WALL & EXTENT
- EXTENT OF OVERFRAMING
- METAL HANGER
- INDICATES POST ABOVE. PROVIDE SOLID BLOCKING UNDER POST OR JAMB ABOVE.
- INDICATES HOLD-DOWN OR STRAP. REFER TO SCHEDULE.

REFER TO S0.0 FOR TYPICAL STRUCTURAL NOTES & SCHEDULES

seal: 7/14/25

NORTH CAROLINA PROFESSIONAL SEAL 036012 ENGINEER JOSEPH T. RICKER

© copyright : MULHERN & KULP Structural Engineering, Inc.

MULHERN+KULP
RESIDENTIAL STRUCTURAL ENGINEERING
300 Riverside Ave, Building 1 - Fairless, PA 19030
p 215.295.0001 - mulhern-kulp.com
NC LIC. #C-3825

M&K project number: 126-23061

project mgr: JTR
drawn by: GTK
issue date: 07-14-25

REVISIONS:
date: initial:

DRB HOMES

ROOF FRAMING PLANS
BLAKE POND COMMUNITY
LOT 110 - DRAYTON 2
RALEIGH, NC

sheet: S4.0

FILE: RLH - Blake Pond - Lot 110 - Structurals DATE: 7/14/2025 1:08 PM

LETTERED DETAILS ARE TYPICAL FOR THIS HOME & SHALL BE IMPLEMENTED IN ALL APPLICABLE AREAS. THESE DETAILS ARE NOT "CUT" ON THE PLANS.

NUMBERED DETAILS ARE PLAN SPECIFIC AND ARE ONLY REQUIRED WHERE SPECIFICALLY INDICATED ("CUT") ON THE PLANS.

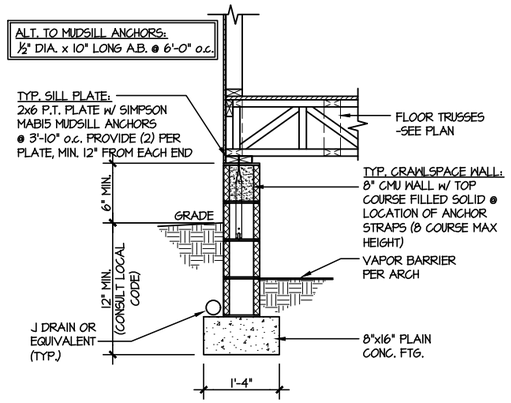

1 TYPICAL CRAWLSPACE FOUNDATION
SCALE: 3/8"=1'-0"

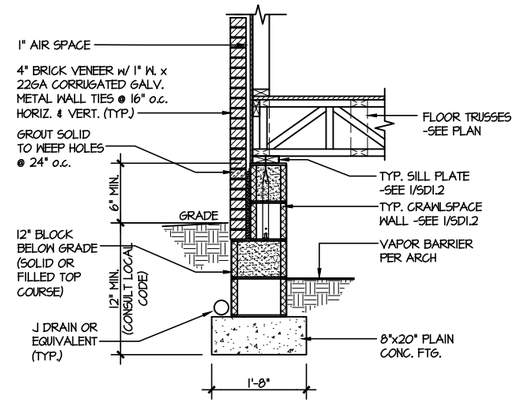

2 TYPICAL CRAWLSPACE FOUNDATION
SCALE: 3/8"=1'-0" w/ BRICK VENEER

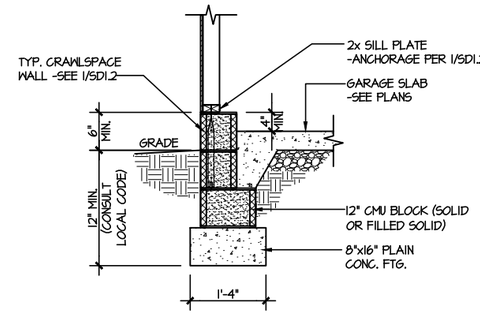

3 TYPICAL GARAGE FOUNDATION
SCALE: 3/8"=1'-0"

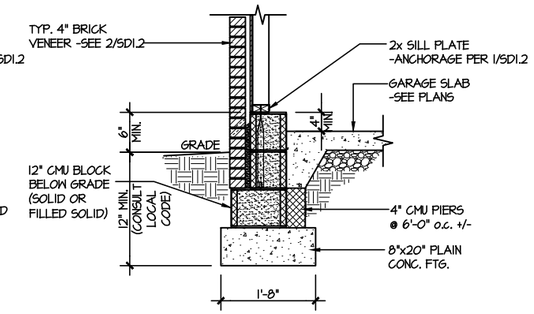

4 TYPICAL GARAGE FOUNDATION
SCALE: 3/8"=1'-0" w/ BRICK VENEER

PLAIN CONC. FOOTINGS AS DIMENSIONED & SHOWN ARE MINIMUM SIZES REQUIRED & HAVE BEEN ENGINEERED. ADDITION OF CONTINUOUS REBAR OR LARGER FOOTINGS MAY BE PROVIDED AT THE DISCRETION OF THE BUILDER.

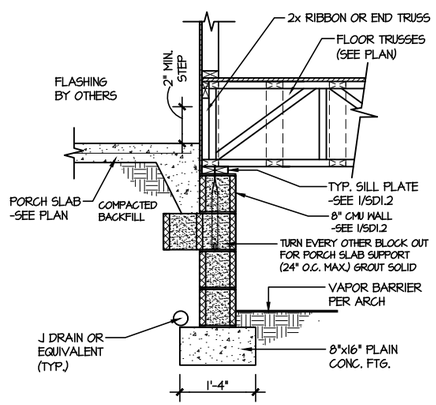

5 TYPICAL CRAWLSPACE FOUNDATION @ PORCH/PATIO SLAB
SCALE: 3/8"=1'-0"
(REFER TO DETAIL 12 FOR WOOD PORCH OPTION)

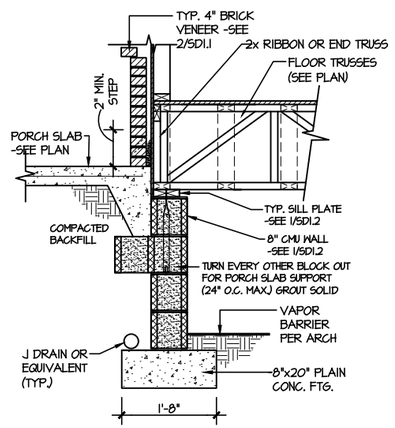

6 TYPICAL CRAWLSPACE FOUNDATION @ PORCH/PATIO SLAB
SCALE: 3/8"=1'-0" w/ BRICK VENEER

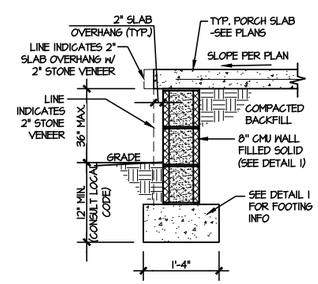

7A TYP. FOOTING @ PORCH SLAB
SCALE: 3/8"=1'-0"

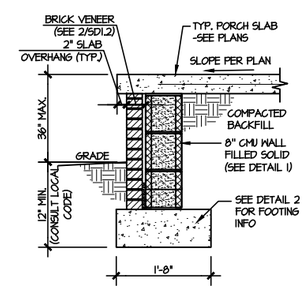

7B TYP. FOOTING @ PORCH SLAB
SCALE: 3/8"=1'-0" w/ BRICK VENEER

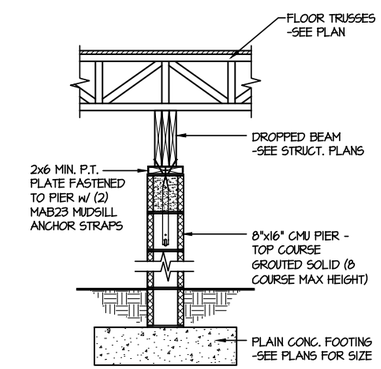

8 TYPICAL CRAWLSPACE FND. @ INTERIOR PIER
SCALE: 3/8"=1'-0"

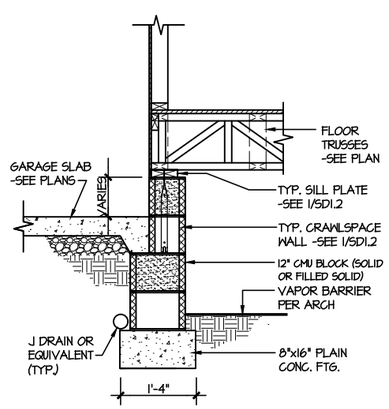

9 TYPICAL CRAWLSPACE FOUNDATION @ GARAGE
SCALE: 3/8"=1'-0"

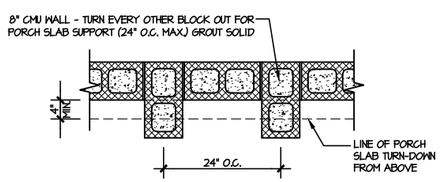

TOP VIEW OF FND. WALL @ PORCH SLAB SUPPORT

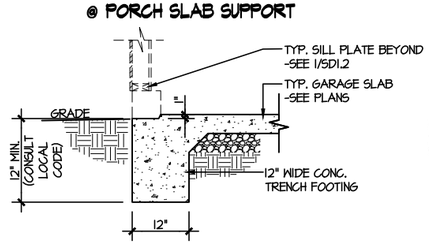

10 TYPICAL SLAB ON GRADE GARAGE ENTRY @ PERIMETER FOOTING
SCALE: 3/8"=1'-0"

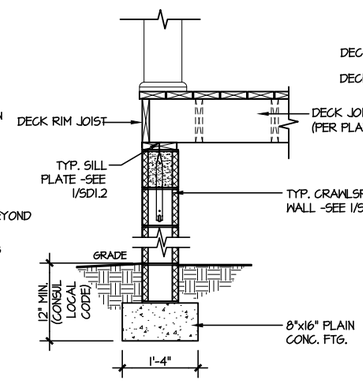

11 TYPICAL CRAWLSPACE FOUNDATION @ WOOD PORCH/DECK PERIMETER
SCALE: 3/8"=1'-0"

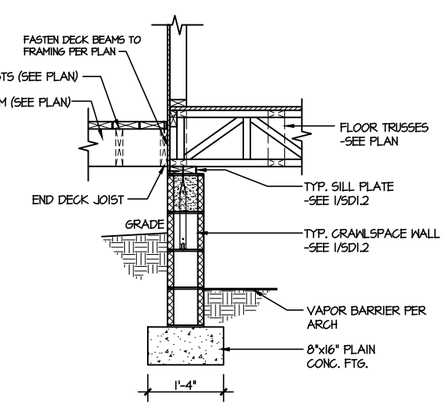

12 TYPICAL CRAWLSPACE FOUNDATION @ WOOD PORCH/DECK
SCALE: 3/8"=1'-0"

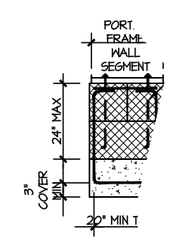

A GARAGE WALL RE
SCALE: 3/8"=1'-0

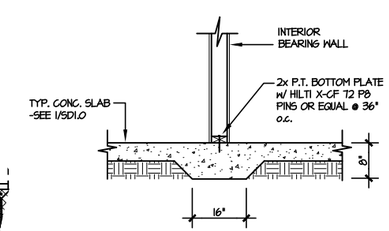

13 TYPICAL THICKENED SLAB @ INTERIOR BEARING WALL
SCALE: 3/8"=1'-0"

seal: 7/14/25

NORTH CAROLINA PROFESSIONAL SEAL 086012 ENGINEER JOSEPH T. RICKER

Copyright : MULHERN & KULP Structural Engineering, Inc.

MULHERN+KULP
RESIDENTIAL STRUCTURAL ENGINEERING
300 Riverside Ave, Building 1 - Jenkintown, PA 19046
P: 215-576-8001 - www.mulhernkulp.com
NC LIC. #C-3825

M&K project number: 126-23061

project mgr: JTR
drawn by: GTK
issue date: 07-14-25

REVISIONS:
date: initial:

DRB HOMES

FOUNDATION DETAILS

BLAKE POND COMMUNITY
LOT 110 - DRAYTON 2
RALEIGH, NC

sheet: SD1.2

FILE: RLH - Blake Pond - Lot 110 - Structurals DATE: 7/14/2025 1:08 PM

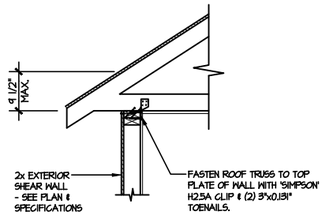

A1 TYPICAL SHEAR TRANSFER DETAIL @ ROOF

SCALE: 3/8"=1'-0"

HEEL HEIGHT LESS THAN 9 ½" NO BLOCKING REQ'D

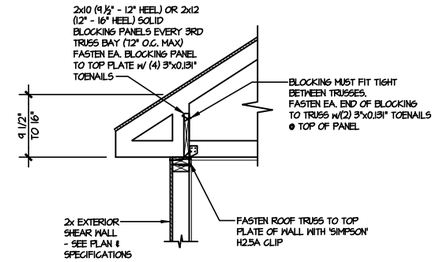

A2 TYPICAL SHEAR TRANSFER DETAIL @ ROOF

SCALE: 3/8"=1'-0"

HEEL HEIGHT BETWEEN 9 ½" - 16" BLOCKING REQ'D

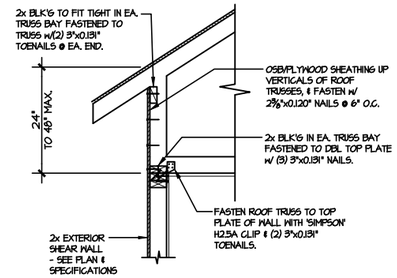

A3 TYPICAL SHEAR TRANSFER DETAIL @ RAISED HEEL TRUSS

SCALE: 3/8"=1'-0"

HEEL HEIGHT UP TO 48" MAX.

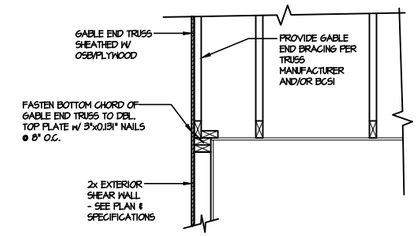

B TYPICAL GABLE END DETAIL

SCALE: 3/8"=1'-0"

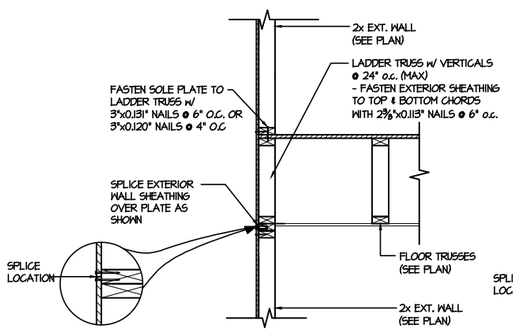

C1 TYPICAL SHEAR TRANSFER DETAIL BETWEEN FLOORS @ EXTERIOR WALL

SCALE: 3/8"=1'-0"

PARALLEL FRAME

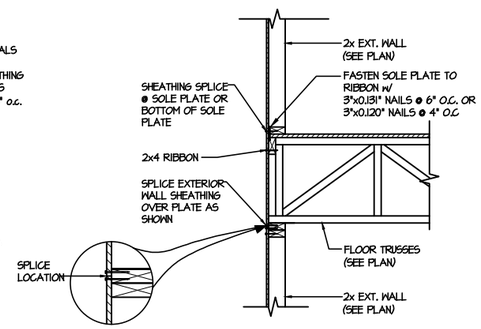

C2 TYPICAL SHEAR TRANSFER DETAIL BETWEEN FLOORS @ EXTERIOR WALL

SCALE: 3/8"=1'-0"

PERPENDICULAR FRAME

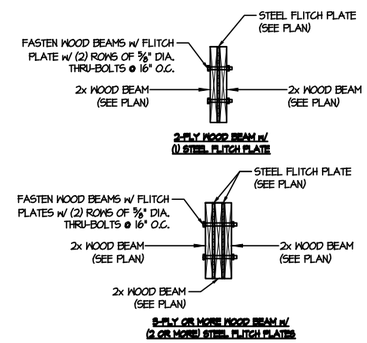

D TYPICAL FLITCH BEAM CONNECTION DETAIL

SCALE: 3/4"=1'-0"

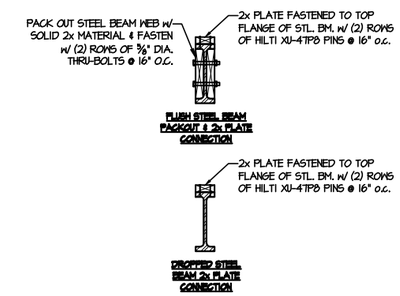

E TYPICAL STEEL BEAM CONNECTION DETAIL

SCALE: 3/4"=1'-0"

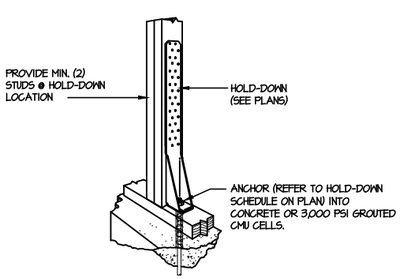

F1 TYPICAL HOLD DOWN INSTALLATION

SCALE: N.T.S.

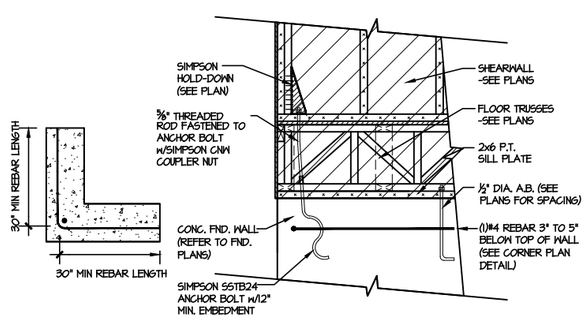

F2 TYPICAL CORNER FOUNDATION HOLD-DOWN INSTALLATION

SCALE: N.T.S.

LETTERED DETAILS ARE TYPICAL FOR THIS HOME & SHALL BE IMPLEMENTED IN ALL APPLICABLE AREAS. THESE DETAILS ARE NOT "CUT" ON THE PLANS.

NUMBERED DETAILS ARE PLAN SPECIFIC AND ARE ONLY REQUIRED WHERE SPECIFICALLY INDICATED ("CUT") ON THE PLANS.

seal: 7/14/25

NORTH CAROLINA PROFESSIONAL SEAL 036012 ENGINEER JOSEPH T. RICKER

Copyright : MULHERN & KULP Structural Engineering, Inc.

MULHERN+KULP
RESIDENTIAL STRUCTURAL ENGINEERING
300 Riverside Ave, Building 1 - Jenkintown, PA 19046
P: 215-576-8001 - www.mulhernkulp.com
NC LIC. #C-3825

M&K project number: 126-23061

project mgr: JTR
drawn by: GTK
issue date: 07-14-25

REVISIONS:

date:	initial:

DRB HOMES

FRAMING DETAILS

BLAKE POND COMMUNITY
LOT 110 - DRAYTON 2
RALEIGH, NC

sheet: SD2.0

FILE: RLH - Blake Pond - Lot 110 - Structurals DATE: 7/14/2025 1:08 PM

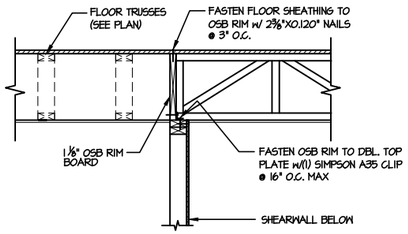

1 SHEAR TRANSFER DETAIL @ INTERIOR SHEARWALL BELOW

SCALE: 3/4"=1'-0" PARALLEL FRAMING

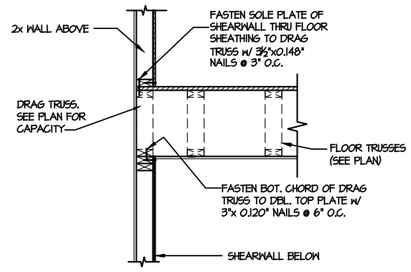

2 SHEAR TRANSFER DETAIL @ INT. SHEARWALL ABOVE & BELOW

SCALE: 3/4"=1'-0" EDGE OF FRAMING

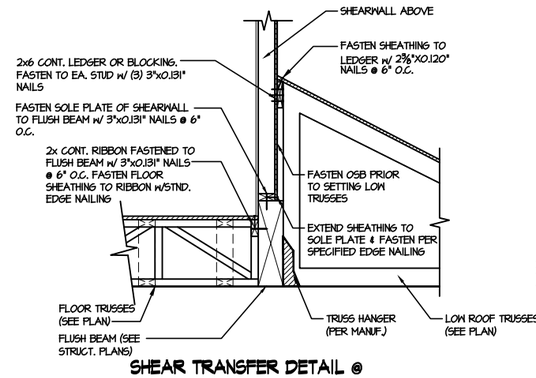

3 SHEAR TRANSFER DETAIL @ EXTERIOR SHEARWALL ABOVE

SCALE: 3/4"=1'-0"

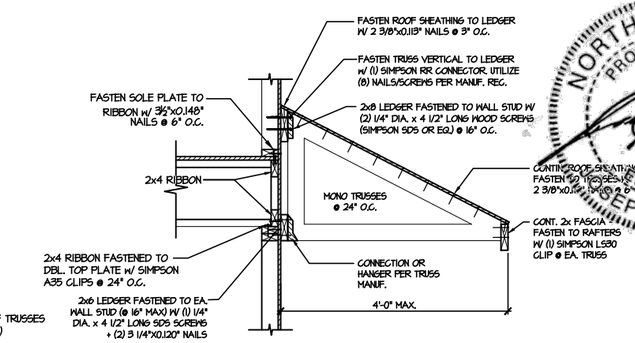

4 DETAIL @ SHED ROOF

SCALE: 3/8"=1'-0"

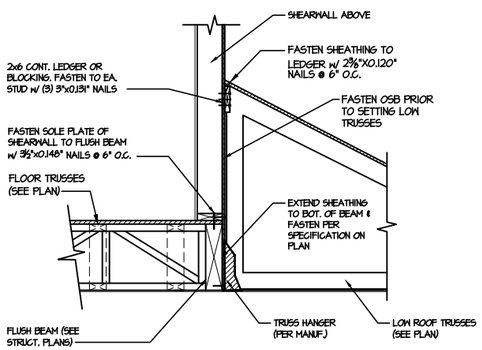

5 SHEAR TRANSFER DETAIL @ EXTERIOR SHEARWALL ABOVE

SCALE: 3/4"=1'-0"

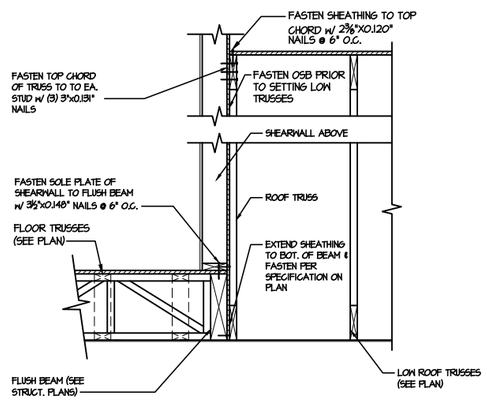

6 SHEAR TRANSFER DETAIL @ EXTERIOR SHEARWALL ABOVE

SCALE: 3/4"=1'-0"

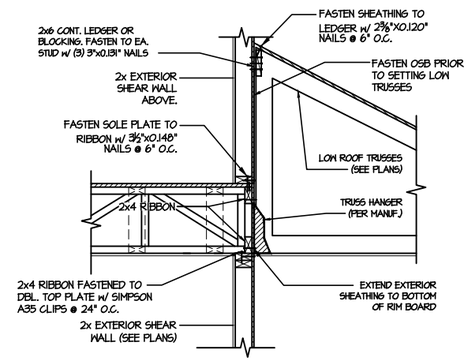

7 TYPICAL SHEAR TRANSFER DETAIL BETWEEN FLOORS @ INTERIOR WALL

SCALE: 3/4"=1'-0"

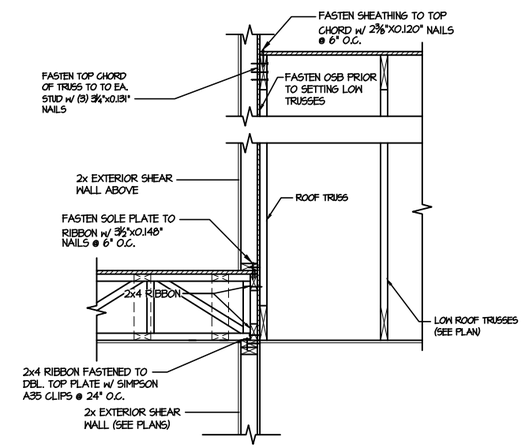

8 TYPICAL SHEAR TRANSFER DETAIL BETWEEN FLOORS @ INTERIOR WALL

SCALE: 3/4"=1'-0"

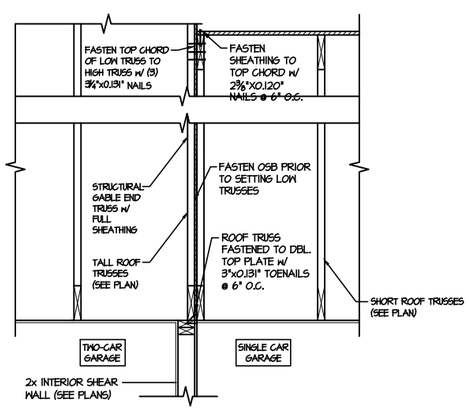

9 TYPICAL SHEAR TRANSFER DETAIL BETWEEN GARAGE BAYS

SCALE: 3/4"=1'-0"

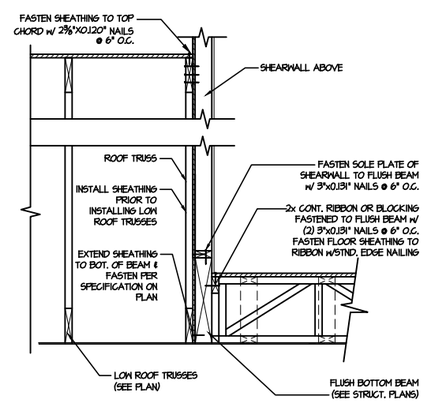

13 SHEAR TRANSFER DETAIL @ EXTERIOR SHEARWALL ABOVE

SCALE: 3/4"=1'-0"

seal: 7/14/25

NORTH CAROLINA PROFESSIONAL SEAL 086012 ENGINEER JOSEPH T. RICKER

© copyright : MULHERN & KULP Structural Engineering, Inc.

MULHERN+KULP
RESIDENTIAL STRUCTURAL ENGINEERING
3000 Riverside Ave, Building 1 - Jackson, PA 18902
P: 215-598-8001 - www.mulhernkulp.com
NC LIC. #C-3825

M&K project number: 126-23061

project mgr: JTR
drawn by: GTK
issue date: 07-14-25

REVISIONS:

date:	initial:

DRB HOMES

FRAMING DETAILS

BLAKE POND COMMUNITY
LOT 110 - DRAYTON 2
RALEIGH, NC

sheet: SD2.1A

FILE: RLH - Blake Pond - Lot 110 - Structurals DATE: 7/14/2025 1:08 PM

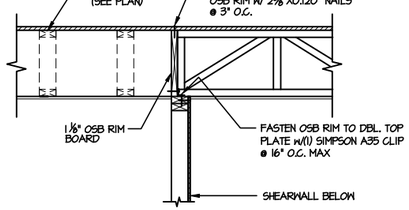

1 SHEAR TRANSFER DETAIL @ INTERIOR SHEARWALL BELOW

SCALE: 3/4"=1'-0" PARALLEL FRAMING

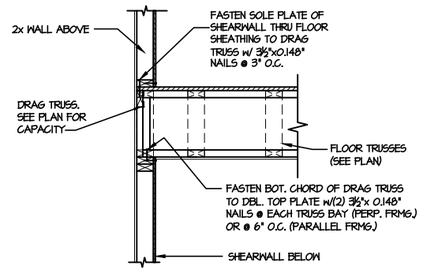

2 SHEAR TRANSFER DETAIL @ INT. SHEARWALL ABOVE & BELOW

SCALE: 3/4"=1'-0" EDGE OF FRAMING

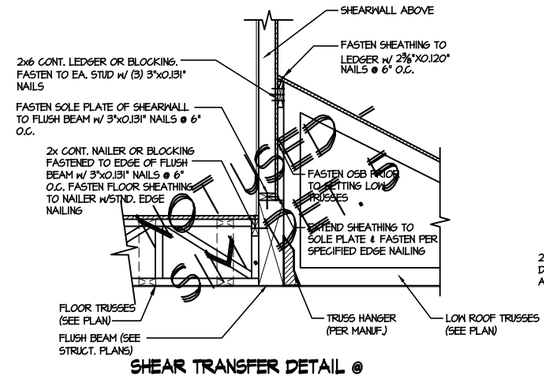

3 SHEAR TRANSFER DETAIL @ EXTERIOR SHEARWALL ABOVE

SCALE: 3/4"=1'-0"

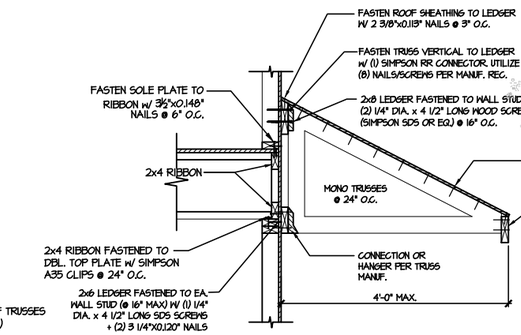

4 DETAIL @ SHED ROOF

SCALE: 3/8"=1'-0"

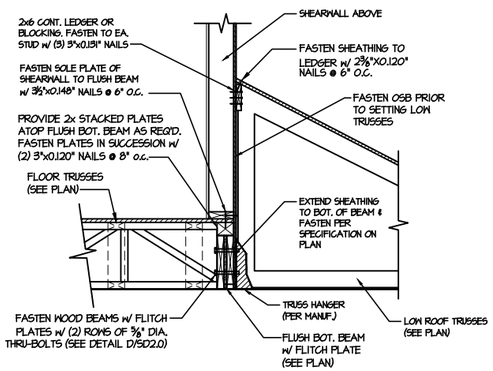

5 SHEAR TRANSFER DETAIL @ EXTERIOR SHEARWALL ABOVE

SCALE: 3/4"=1'-0"

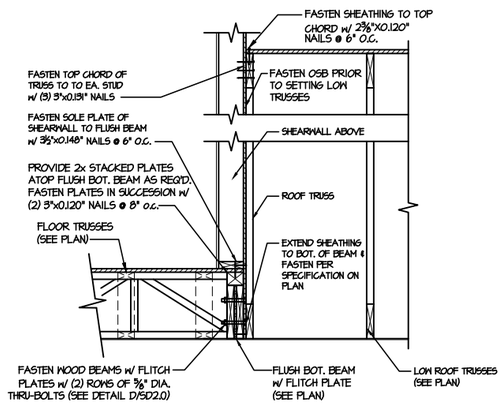

6 SHEAR TRANSFER DETAIL @ EXTERIOR SHEARWALL ABOVE

SCALE: 3/4"=1'-0"

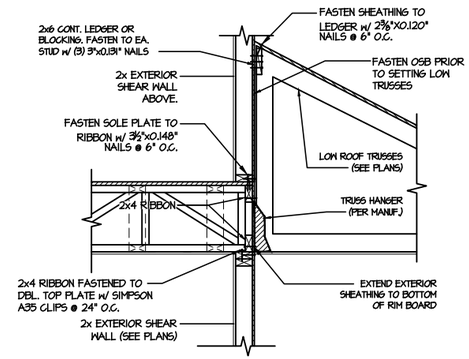

7 TYPICAL SHEAR TRANSFER DETAIL BETWEEN FLOORS @ INTERIOR WALL

SCALE: 3/4"=1'-0"

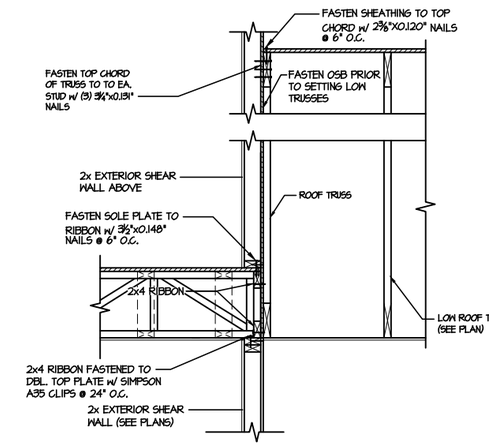

8 TYPICAL SHEAR TRANSFER DETAIL BETWEEN FLOORS @ INTERIOR WALL

SCALE: 3/4"=1'-0"

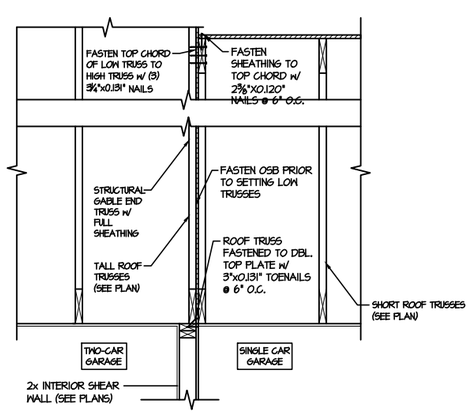

9 TYPICAL SHEAR TRANSFER DETAIL BETWEEN GARAGE BAYS

SCALE: 3/4"=1'-0"

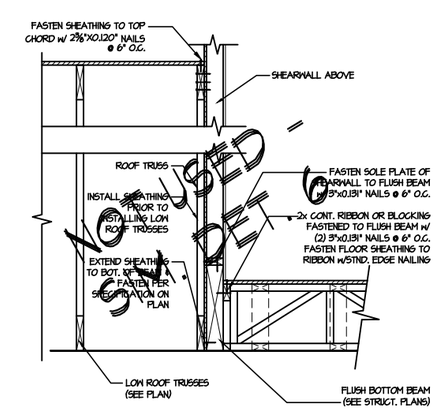

13 SHEAR TRANSFER DETAIL @ EXTERIOR SHEARWALL ABOVE

SCALE: 3/4"=1'-0"

seal: 7/14/25

NORTH CAROLINA PROFESSIONAL SEAL 086012 ENGINEER JOSEPH T. RICKER

© copyright : MULHERN & KULP Structural Engineering, Inc.

MULHERN+KULP
RESIDENTIAL STRUCTURAL ENGINEERING
3000 Riverside Ave, Building 1 - Jackson, PA 18062
P: 215-598-8001 - info@mulhern-kulp.com
NC LIC. #C-3825

M&K project number: 126-23061

project mgr: JTR
drawn by: GTK
issue date: 07-14-25

REVISIONS:
date: initial:

DRB HOMES

FRAMING DETAILS

BLAKE POND COMMUNITY
LOT 110 - DRAYTON 2
RALEIGH, NC

sheet: SD2.1B

FILE: RLH - Blake Pond - Lot 110 - Structurals DATE: 7/14/2025 1:09 PM

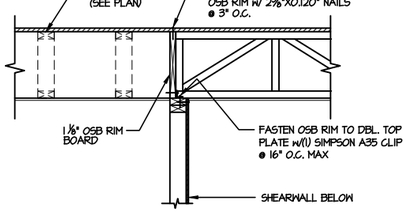

SHEAR TRANSFER DETAIL @ INTERIOR SHEARWALL BELOW

1 SCALE: 3/4"=1'-0" PARALLEL FRAMING

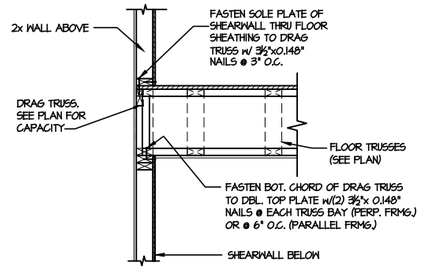

SHEAR TRANSFER DETAIL @ INT. SHEARWALL ABOVE & BELOW

2 SCALE: 3/4"=1'-0" EDGE OF FRAMING

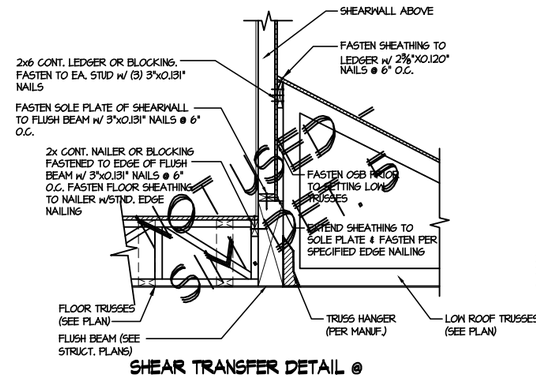

SHEAR TRANSFER DETAIL @ EXTERIOR SHEARWALL ABOVE

3 SCALE: 3/4"=1'-0"

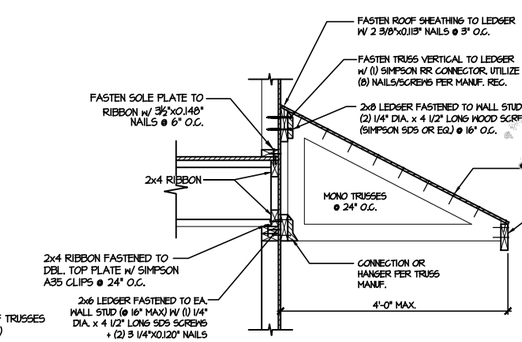

DETAIL @ SHED ROOF

4 SCALE: 3/8"=1'-0"

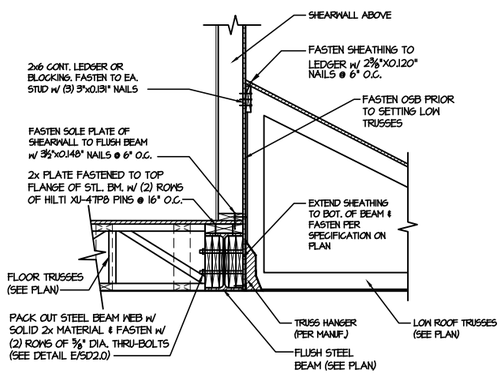

SHEAR TRANSFER DETAIL @ EXTERIOR SHEARWALL ABOVE

5 SCALE: 3/4"=1'-0"

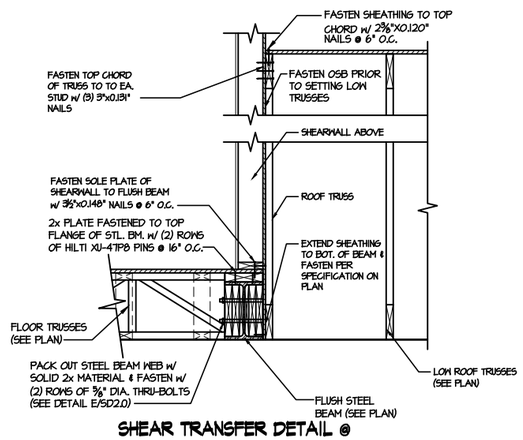

SHEAR TRANSFER DETAIL @ EXTERIOR SHEARWALL ABOVE

6 SCALE: 3/4"=1'-0"

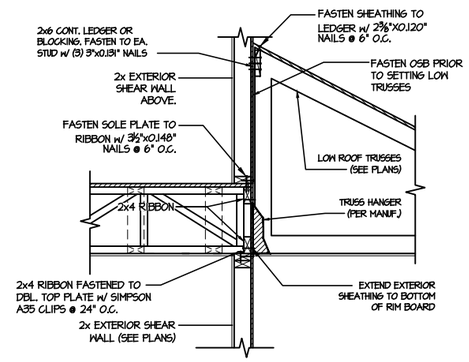

TYPICAL SHEAR TRANSFER DETAIL BETWEEN FLOORS @ INTERIOR WALL

7 SCALE: 3/4"=1'-0"

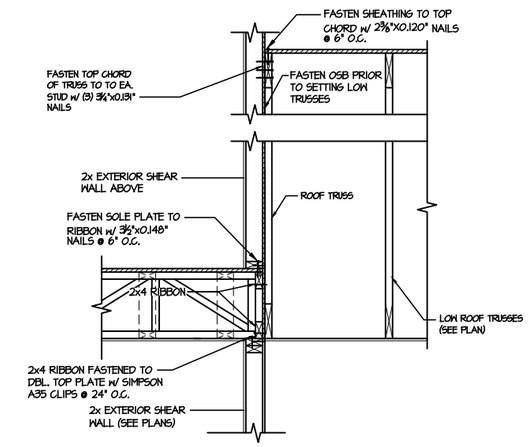

TYPICAL SHEAR TRANSFER DETAIL BETWEEN FLOORS @ INTERIOR WALL

8 SCALE: 3/4"=1'-0"

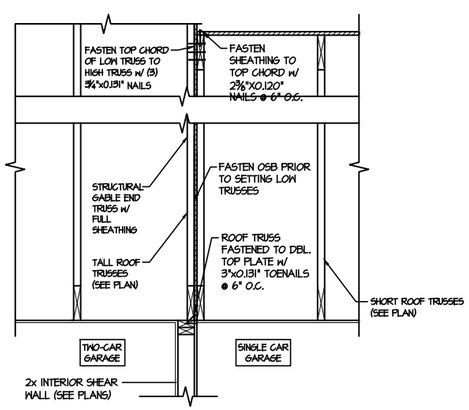

TYPICAL SHEAR TRANSFER DETAIL BETWEEN GARAGE BAYS

9 SCALE: 3/4"=1'-0"

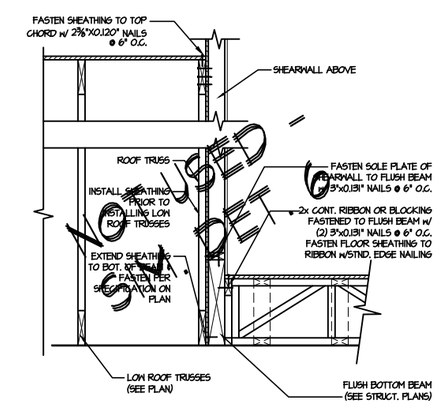

SHEAR TRANSFER DETAIL @ EXTERIOR SHEARWALL ABOVE

13 SCALE: 3/4"=1'-0"

seal: 7/14/25

NORTH CAROLINA PROFESSIONAL SEAL 036012 ENGINEER JOSEPH T. RICKER

© copyright : MULHERN & KULP Structural Engineering, Inc.

MULHERN+KULP
RESIDENTIAL STRUCTURAL ENGINEERING
300 Rosedale Ave, Bridgeport - Audubon, PA 19403
P:215.635.8001 F: mulhernkulp.com
NC LIC. #C-3825

M&K project number: 126-23061

project mgr: JTR
drawn by: GTK
issue date: 07-14-25

REVISIONS:
date: initial:

DRB HOMES

FRAMING DETAILS
BLAKE POND COMMUNITY
LOT 110 - DRAYTON 2
RALEIGH, NC

sheet: SD2.1C

FILE: RLH - Blake Pond - Lot 110 - Structurals DATE: 7/14/2025 1:09 PM

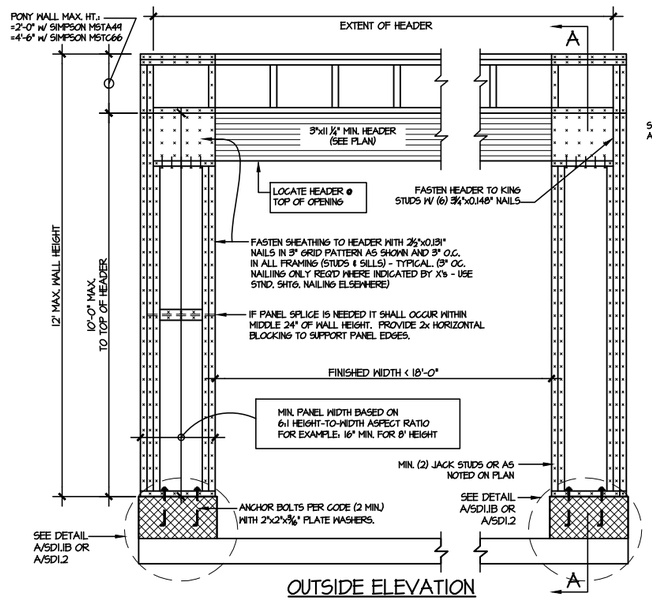

OUTSIDE ELEVATION

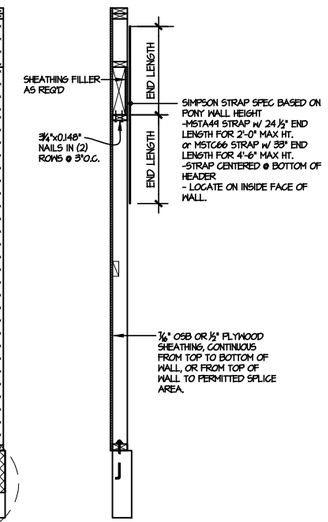

SECTION A-A THROUGH PIER

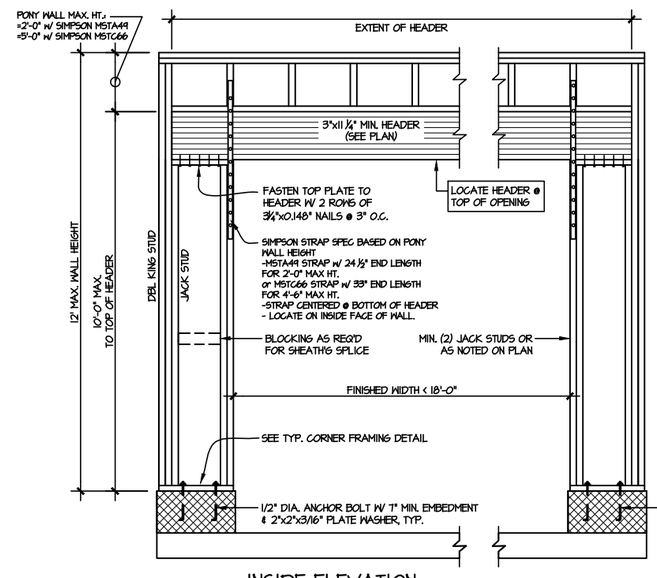

INSIDE ELEVATION

NOTE: ALL SHEATHABLE AREAS OF EXTERIOR WALL SHALL BE FULLY SHEATHED WITH 1/2" PLYWOOD OR 7/16" OSB

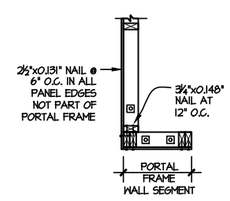

PLAN VIEW OF CORNER DETAIL

TWO SIDED GARAGE PORTAL FRAME BRACING ELEVATION ON CMU STEM

1

SCALE: N.T.S.

seal: 7/14/25

NORTH CAROLINA PROFESSIONAL SEAL 036012 ENGINEER JOSEPH T. RICKER

Copyright : MULHERN & KULP Structural Engineering, Inc.

MULHERN+KULP
RESIDENTIAL STRUCTURAL ENGINEERING
3000 Riverside Ave, Building 1 - Audubon, PA 19403
P: 215-630-0001 - www.mulhernkulp.com
NC LIC. #C-3825

M&K project number: 126-23061

project mgr: JTR
drawn by: GTK
issue date: 07-14-25

REVISIONS:
date: initial:

DRB HOMES

FRAMING DETAILS

BLAKE POND COMMUNITY
LOT 110 - DRAYTON 2
RALEIGH, NC

sheet: SD2.2

FILE: RLH - Blake Pond - Lot 110 - Structurals DATE: 7/14/2025 1:09 PM

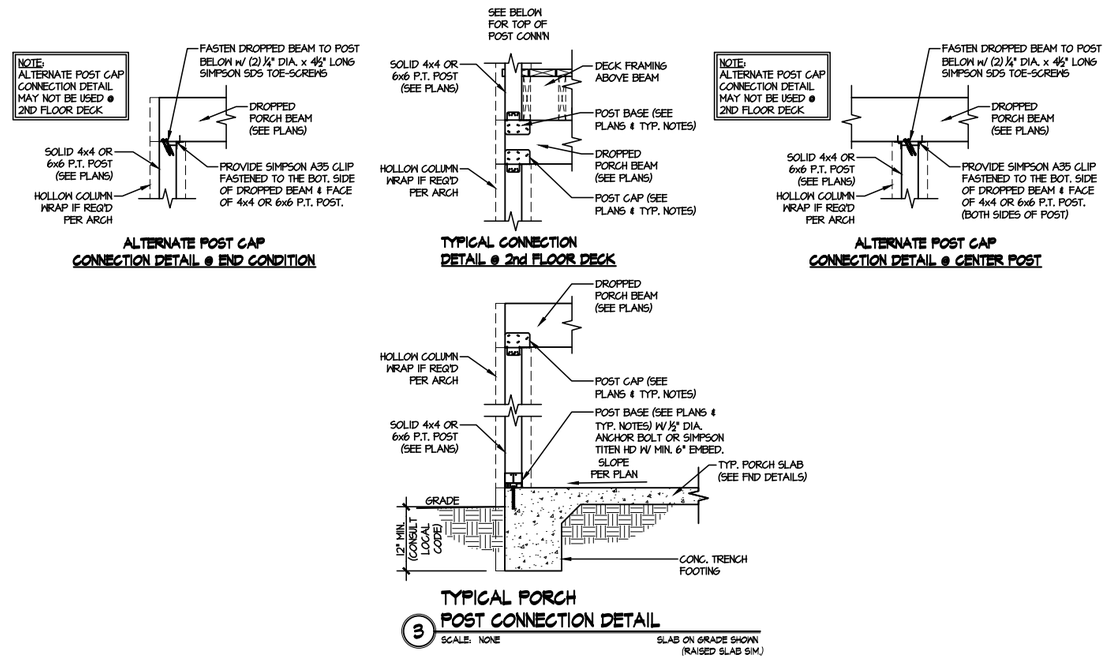

TYPICAL PORCH POST CONNECTION DETAIL

3 SCALE: NONE

SLAB ON GRADE SHOWN (RAISED SLAB SIM.)

seal: 7/14/25

NORTH CAROLINA PROFESSIONAL SEAL 036012 ENGINEER JOSEPH T. RICKER

© copyright : MULHERN & KULP Structural Engineering, Inc.

MULHERN+KULP
RESIDENTIAL STRUCTURAL ENGINEERING
3000 Riverside Ave, Building 1 - Jenkintown, PA 19046
P: 215-572-8001 - info@mulhern-kulp.com
NC LIC. #C-3825

M&K project number: 126-23061

project mgr: JTR
drawn by: GTK
issue date: 07-14-25

REVISIONS:

date:	initial:

DRB HOMES

FRAMING DETAILS

BLAKE POND COMMUNITY
LOT 110 - DRAYTON 2
RALEIGH, NC

sheet: SD3.0

FILE: RLH - Blake Pond - Lot 110 - Structurals DATE: 7/14/2025 1:09 PM

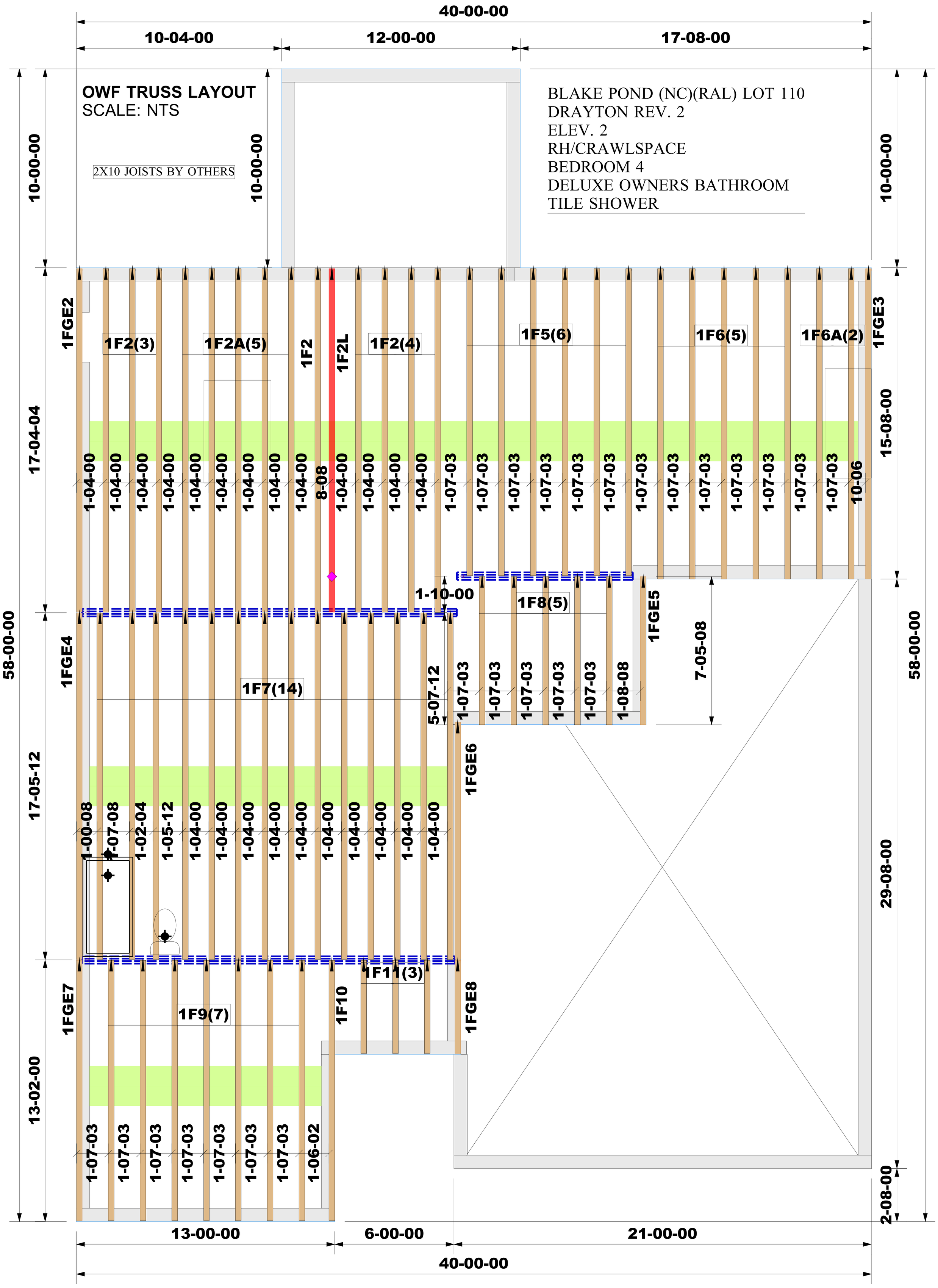

Job #:

2507-1651

Designer:

Roger Espinoza

Sales Rep:

Robbie Zarobinski

WARNING:

CONVENTIONAL FRAMING, ERECTION AND/OR PERMANENT BRACING IS NOT THE RESPONSIBILITY OF THE TRUSS DESIGNER, PLATE MANUFACTURER, OR THE TRUSS MANUFACTURER. PERSONS ERECTING TRUSSES ARE CAUTIONED TO SEEK PROFESSIONAL ADVICE REGARDING THE ERECTION BRACING WHICH IS ALWAYS REQUIRED TO PREVENT TOPPLING AND DOMINOING DURING ERECTION; AND PERMANENT BRACING WHICH MAY BE REQUIRED IN SPECIFIC APPLICATIONS. SEE "BRACING WOOD TRUSSES COMMENTARY AND RECOMMENDATIONS" (BCSI 1) FOR FURTHER INFORMAITON.

TRUSSES SHALL BE INSTALLED IN A STRAIGHT AND PLUMB POSITION WHERE NO SHEATHING IS APPLIED DIRECTLY TO TOP AND/OR BOTTOM CHORDS, THEY SHALL BE BRACED AS SPCIFIED ON THE ENGINEERED DESIGN. TRUSSES SHALL BE HANDLED WITH REASONABLE CARE DURING ERECTION TO PREVENT DAMAGE OR PERSONAL INJURY.

NOTE:

IT IS THE RESPONSIBILITY OF THE BUILDING DESIGNER OR ARCHITECT TO PROVIDE AN APPROPRIATE CONNECTION FOR TRUSSES TO SUPPORTING STRUCTURE PER REACTIONS SHOWN ON TRUSS ENGINEERING. SPECIAL CONSIDERATIONS FOR MECHANICAL EQUIPMENT AND/OR PLUMBING (AND THEIR CONNECTIONS) IN TRUSS SPACE MUST BE DIAGRAMMED BY BUILDER ON APPROVED TRUSS LAYOUT PRIOR TO FABRICATION.

THIS COMPANY IS A TRUSS MANUFACTURER WHOSE RESPONSIBILITIES ARE LIMITED TO THOSE DESCRIBED IN WTCA 1-1995 "DESIGN RESPONSIBILITIES". ACCORDINGLY, IT DISCLAIMS ANY RESPONSIBILITIES AND/OR LIABILITY FOR THE CONSTRUCTIION DESIGN, DRAWINGS, DOCUMENTS INCLUDING THE INSTALLATION, AND BRACING OF TRUSSES MANUFACTURED BY THIS COMPANY.

Customer: DRB Raleigh

Job Name: Blake Pond Lot 00.0110 OWF

Lot #: 00.0110

Model Name: Drayton

Third-Party Quality Assurance Licensee
TPI Plant W974

Structural, LLC
201 Poplar Avenue
Thurmont, MD 21788
Phone: 301-271-7591

OWF TRUSS LAYOUT
SCALE: NTS

BLAKE POND (NC)(RAL) LOT 110
DRAYTON REV. 2
ELEV. 2
RH/CRAWLSPACE
BEDROOM 4
DELUXE OWNERS BATHROOM
TILE SHOWER

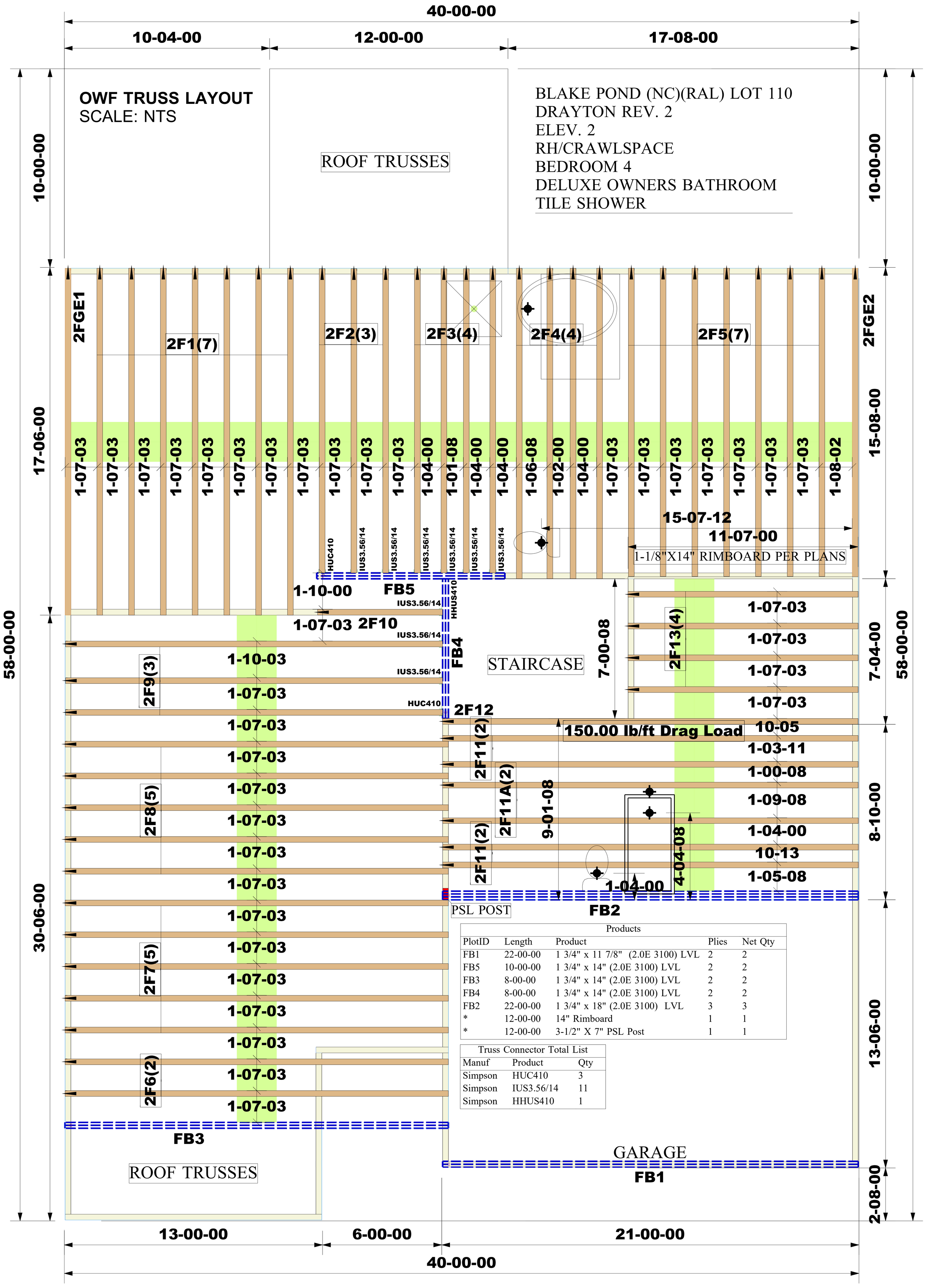

Products				
PlotID	Length	Product	Plies	Net Qty
FB1	22-00-00	1 3/4" x 11 7/8" (2.0E 3100) LVL	2	2
FB5	10-00-00	1 3/4" x 14" (2.0E 3100) LVL	2	2
FB3	8-00-00	1 3/4" x 14" (2.0E 3100) LVL	2	2
FB4	8-00-00	1 3/4" x 14" (2.0E 3100) LVL	2	2
FB2	22-00-00	1 3/4" x 18" (2.0E 3100) LVL	3	3
*	12-00-00	14" Rimboard	1	1
*	12-00-00	3-1/2" X 7" PSL Post	1	1

Truss Connector Total List		
Manuf	Product	Qty
Simpson	HUC410	3
Simpson	IUS3.56/14	11
Simpson	HHUS410	1

Job #:
2507-1651

Designer:
Roger Espinoza

Sales Rep:
Robbie Zarobinski

WARNING:

CONVENTIONAL FRAMING, ERECTION AND/OR PERMANENT BRACING IS NOT THE RESPONSIBILITY OF THE TRUSS DESIGNER, PLATE MANUFACTURER, OR THE TRUSS MANUFACTURER. PERSONS ERECTING TRUSSES ARE CAUTIONED TO SEEK PROFESSIONAL ADVICE REGARDING THE ERECTION BRACING WHICH IS ALWAYS REQUIRED TO PREVENT TOPPLING AND DOMINOING DURING ERECTION; AND PERMANENT BRACING WHICH MAY BE REQUIRED IN SPECIFIC APPLICATIONS. SEE "BRACING WOOD TRUSSES COMMENTARY AND RECOMMENDATIONS" (BCSI 1) FOR FURTHER INFORMAITON.

TRUSSES SHALL BE INSTALLED IN A STRAIGHT AND PLUMB POSITION WHERE NO SHEATHING IS APPLIED DIRECTLY TO TOP AND/OR BOTTOM CHORDS, THEY SHALL BE BRACED AS SPCIFIED ON THE ENGINEERED DESIGN. TRUSSES SHALL BE HANDLED WITH REASONABLE CARE DURING ERECTION TO PREVENT DAMAGE OR PERSONAL INJURY.

NOTE:

IT IS THE RESPONSIBILITY OF THE BUILDING DESIGNER OR ARCHITECT TO PROVIDE AN APPROPRIATE CONNECTION FOR TRUSSES TO SUPPORTING STRUCTURE PER REACTIONS SHOWN ON TRUSS ENGINEERING. SPECIAL CONSIDERATIONS FOR MECHANICAL EQUIPMENT AND/OR PLUMBING (AND THEIR CONNECTIONS) IN TRUSS SPACE MUST BE DIAGRAMMED BY BUILDER ON APPROVED TRUSS LAYOUT PRIOR TO FABRICATION.

THIS COMPANY IS A TRUSS MANUFACTURER WHOSE RESPONSIBILITIES ARE LIMITED TO THOSE DESCRIBED IN WTCA 1-1995 "DESIGN RESPONSIBILITIES". ACCORDINGLY, IT DISCLAIMS ANY RESPONSIBILITIES AND/OR LIABILITY FOR THE CONSTRUCTIION DESIGN, DRAWINGS, DOCUMENTS INCLUDING THE INSTALLATION, AND BRACING OF TRUSSES MANUFACTURED BY THIS COMPANY.

Customer: DRB Raleigh

Job Name: Blake Pond Lot 00.0110 OWF

Lot #: 00.0110

Model Name: Drayton

Third-Party Quality Assurance Licensee
TPI Plant W974

Structural, LLC
201 Poplar Avenue
Thurmont, MD 21788
Phone: 301-271-7591

ROOF TRUSS LAYOUT
SCALE: NTS

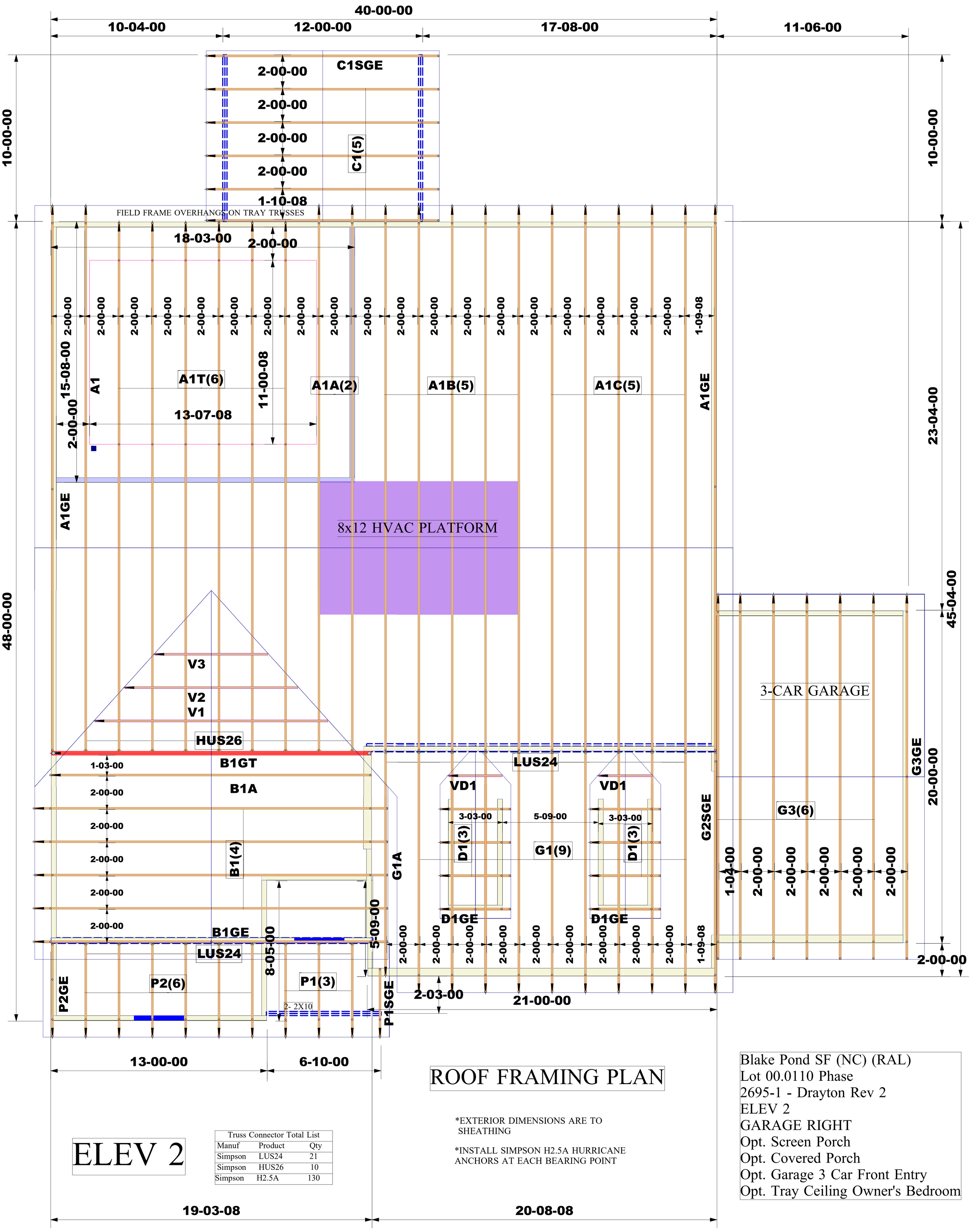

ROOF FRAMING PLAN

*EXTERIOR DIMENSIONS ARE TO SHEATHING

*INSTALL SIMPSON H2.5A HURRICANE ANCHORS AT EACH BEARING POINT

ELEV 2

Truss Connector Total List		
Manuf	Product	Qty
Simpson	LUS24	21
Simpson	HUS26	10
Simpson	H2.5A	130

Blake Pond SF (NC) (RAL)
Lot 00.0110 Phase
2695-1 - Drayton Rev 2
ELEV 2
GARAGE RIGHT
Opt. Screen Porch
Opt. Covered Porch
Opt. Garage 3 Car Front Entry
Opt. Tray Ceiling Owner's Bedroom

Job #:
2507-1652

Designer:
Sagar Banik

Sales Rep:
Robbie Zarobinski

WARNING:

CONVENTIONAL FRAMING, ERECTION AND/OR PERMANENT BRACING IS NOT THE RESPONSIBILITY OF THE TRUSS DESIGNER, PLATE MANUFACTURER, OR THE TRUSS MANUFACTURER. PERSONS ERECTING TRUSSES ARE CAUTIONED TO SEEK PROFESSIONAL ADVICE REGARDING THE ERECTION BRACING WHICH IS ALWAYS REQUIRED TO PREVENT TOPPLING AND DOMINOING DURING ERECTION; AND PERMANENT BRACING WHICH MAY BE REQUIRED IN SPECIFIC APPLICATIONS. SEE "BRACING WOOD TRUSSES COMMENTARY AND RECOMMENDATIONS" (BCSI 1) FOR FURTHER INFORMAITON.

TRUSSES SHALL BE INSTALLED IN A STRAIGHT AND PLUMB POSITION WHERE NO SHEATHING IS APPLIED DIRECTLY TO TOP AND/OR BOTTOM CHORDS, THEY SHALL BE BRACED AS SPCIFIED ON THE ENGINEERED DESIGN. TRUSSES SHALL BE HANDLED WITH REASONABLE CARE DURING ERECTION TO PREVENT DAMAGE OR PERSONAL INJURY.

NOTE:

IT IS THE RESPONSIBILITY OF THE BUILDING DESIGNER OR ARCHITECT TO PROVIDE AN APPROPRIATE CONNECTION FOR TRUSSES TO SUPPORTING STRUCTURE PER REACTIONS SHOWN ON TRUSS ENGINEERING. SPECIAL CONSIDERATIONS FOR MECHANICAL EQUIPMENT AND/OR PLUMBING (AND THEIR CONNECTIONS) IN TRUSS SPACE MUST BE DIAGRAMMED BY BUILDER ON APPROVED TRUSS LAYOUT PRIOR TO FABRICATION.

THIS COMPANY IS A TRUSS MANUFACTURER WHOSE RESPONSIBILITIES ARE LIMITED TO THOSE DESCRIBED IN WTCA 1-1995 "DESIGN RESPONSIBILITIES". ACCORDINGLY, IT DISCLAIMS ANY RESPONSIBILITIES AND/OR LIABILITY FOR THE CONSTRUCTIION DESIGN, DRAWINGS, DOCUMENTS INCLUDING THE INSTALLATION, AND BRACING OF TRUSSES MANUFACTURED BY THIS COMPANY.

Customer: DRB Raleigh

Job Name: Blake Pond Lot 00.0110 Roof

Lot #: 00.0110

Model Name: Drayton

Third-Party Quality Assurance Licensee
TPI Plant W974

Structural, LLC
201 Poplar Avenue
Thurmont, MD 21788
Phone: 301-271-7591