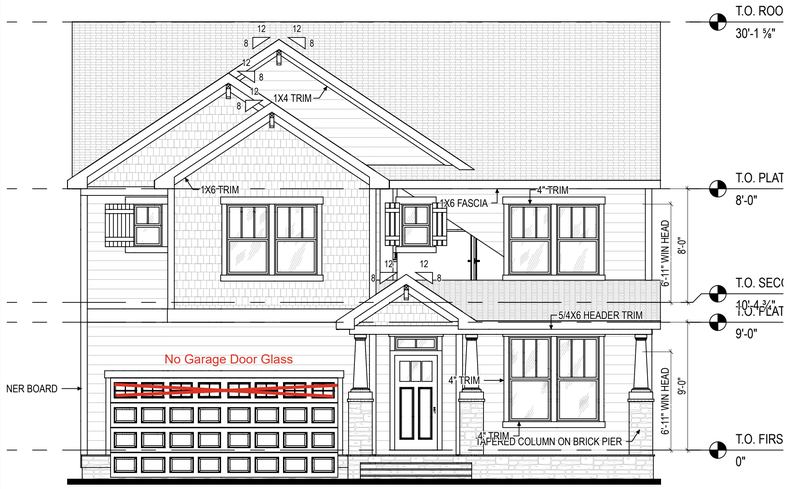

The Garner Craftsman

Signature Series

Lot: 42 | Duncans Creek
757 Beacon Hill Road
Lillington, NC 27546

SHEET INDEX

Name	Number
Cover Sheet	G-100
General Notes & Specifications Instance	G-110
Foundation Plan	A-100
First Floor Plan	A-110
Second Floor Plan	A-120
Roof Plan	A-200
Elevations - Front and Back	A-310
Elevations - Left and Right	A-320
First Floor Electrical Plan	E-110
Second Floor Electrical Plan	E-120
Perspectives	P-100

OPTIONS

OPTION SET	SELECTION
Mudroom Bench	Bench at Mudroom
Elevation	Craftsman
~Foundation Type	Crawlspace
Rear Addition	Extended Covered Patio
Family Room Fireplace	Fireplace w/ Built- Ins
-	
-	
Kitchen Type	Gourmet Kitchen
Messy Kitchen Sink	Messy Kitchen Sink
Messy Kitchen Window	Messy Kitchen Window
Mudroom Window	Mudroom Window
Optional Oven	Optional Wall Oven
Pocket Office Door	Pocket Door
Secondary Walk-In Closet	Secondary WIC
Hall Bath Shower	Shower at Hall Bath
~Series	Signature
Smart Door Delivery Center	Smart Door Delivery Center
Family Room Fireplace Windows	Windows

BUILDING CODES

BUILDING CODES
...
...
...
...
...

BUILDING INFO

CONDITIONED AREA	
TOTAL CONDITIONED AREA	3041 SF
LEVEL 1	1297 SF
LEVEL 2	1744 SF

UNCONDITIONED AREA	
TOTAL UNCONDITIONED AREA	778 SF
Garage Area	406 SF
Covered Patio Area	230 SF
Front Porch Area	142 SF

TOTAL AREA

TYPE	TOTAL AREA
TOTAL CONDITIONED AREA	3041 SF
TOTAL UNCONDITIONED AREA	778 SF
TOTAL UNDER ROOF	3,041 SF

1ST FLOOR AREA

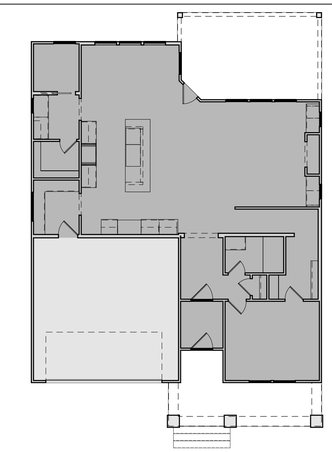

2ND FLOOR AREA

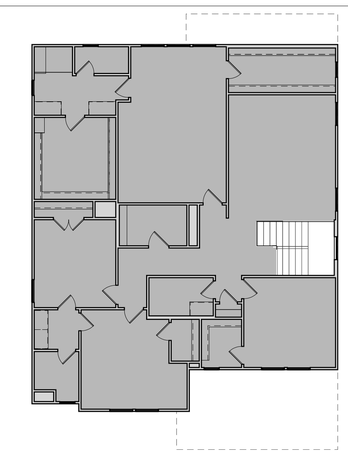

NEW HOME INC.

New Home Inc
1611 Jones Franklin,
Raleigh, NC, 27606

REV/#	DATE	DESCRIPTION
1		
2		
3		
4		
5		
6		
7		
8		

The Garner Craftsman at Cattail Preserve

Cover Sheet

DRAWN BY: Drew DiMeo

HANDING: LEFT

ISSUE DATE: 11/11/1111

SHEET G-100

(c) 2025 New Home Inc

GENERAL NOTES AND SPECIFICATIONS:

1 GENERAL DATA

PROJECT DESCRIPTION:

THIS PROJECT IS FOR THE CONSTRUCTION OF A NEW SINGLE-FAMILY RESIDENCE, AND ASSOCIATED SITE WORK.

TYPICAL NOTES:
ALL WORK TO BE COORDINATED AND SCHEDULED BY THE OWNER.

ALL WORK, INCLUDING PLUMBING, HVAC AND ELECTRICAL WORK NOT DETAILED HEREIN, SHALL COMPLY WITH APPLICABLE STATE AND LOCAL BUILDING CODES AND THE BUILDING STANDARDS REFERENCED THEREIN.

ALL WORK SHALL CONFORM TO THE HIGHEST LEVELS OF THE APPROPRIATE INDUSTRY STANDARDS FOR CUSTOM WORK.

ALL ITEMS SPECIFIED HEREIN ARE TO BE USED WITHOUT SUBSTITUTION. IF THESE NOTES CONFLICT WITH THE OWNERS SCOPE OF WORK DOCUMENTS, THE NOTES HEREIN SHALL GOVERN AND TAKE PRECEDENT.

THE STRUCTURE IS DESIGNED TO BE SELF-SUPPORTING AND STABLE AFTER THE BUILDING IS FULLY COMPLETE. IT IS SOLELY THE CONTRACTORS RESPONSIBILITY TO ENSURE THE SAFETY OF THE BUILDING AND ITS COMPONENT PARTS DURING ERECTION. THIS INCLUDES THE ADDITION OF TEMPORARY BRACING THAT MAY BE REQUIRED.

IT IS SOLELY THE CONTRACTOR'S RESPONSIBILITY TO FOLLOW ALL APPLICABLE SAFETY CODES AND REGULATIONS DURING ALL PHASES OF CONSTRUCTION.

PLAN DIMENSIONS ARE TO FACE OF ROUGH FRAMING OR MASONRY UNLESS NOTED OTHERWISE. DIMENSIONS TO EXTERIOR WALLS INCLUDE 7/16" OSB WALL SHEATHING WITH WATER-RESISTIVE BARRIER, ROUNDED TO THE NEAREST 1/4".

FINISH FLOOR ELEVATION @ FIRST FLOOR LEVEL IS SET AT 0'-0". SEE SITE PLAN FOR ACTUAL FIRST FLOOR ELEVATION @ EACH BUILDING.

ALL @ INTERIOR PARTITIONS SHALL BE 2x4 STUDS @ 16" O.C. WITH 1/2" DRYWALL EACH SIDE. PLAN DIMENSION IS ASSUMED TO BE 3 1/2" UNLESS NOTED OTHERWISE. PROVIDE SOLID LUMBER BLOCKING FOR ALL WALL MOUNTED ITEMS.

SUBSTRATE (BACKER) FOR TILE IN SHOWERS/TUBS SHALL BE FIBER-CEMENT OR SIMILAR PER APPLICABLE CODE.

ALL INTERIOR COLORS AND FINISHES, NOT SPECIFIED HEREIN, TO BE SELECTED BY THE OWNER.

2 SITE CONSTRUCTION
CONTRACTOR OR EXCAVATOR MUST CONTACT THE APPROPRIATE UTILITIES PROTECTION SERVICE AT LEAST 48 HOURS BUT NO MORE THAN 10 WORKING DAYS BEFORE BEGINNING ANY DIGGING PROJECT.

SOILS BEARING PRESSURE AS INDICATED ON THE STRUCTURAL ENGINEERING PLANS BY OTHER.

3 CONCRETE
REFER TO STRUCTURAL ENGINEERING PLANS BY OTHER.

SEE OWNER SCOPE OF WORK DOCUMENTS FOR ADDITIONAL REQUIREMENTS.

4 MASONRY
STONE /ENEER IF USED) TO BE MANUFACTURED STONE - REFER TO OWNERS SCOPE OF WORK DOCUMENT FOR MATERIAL SELECTION AND COLORS.

BRICK ACCENTS (IF USED) TO BE FULL SIZE UNITS, CUT TO THICKNESS OR SHAPE REQUIRED FOR THE SPECIFIC USE. REFER TO THE OWNERS SCOPE OF WORK DOCUMENT FOR MATERIAL SELECTION AND COLORS.

5 METALS
REFER TO STRUCTURAL ENGINEERING PLANS BY OTHER.

6 WOOD & PLASTICS
PROVIDE SOLID BLOCKING FOR ALL WALL MOUNTED ITEMS INCLUDING:
• CABINETS & SHELVES
CLOSET RODS
• MIRRORS AND BATH ACCESSORIES

FRAMING LUMBER IN CONTACT WITH CONCRETE OR MASONRY OR EXPOSED TO THE EXTERIOR SHALL BE PRESERVATIVE PRESSURE TREATED. ANY WOOD, INCLUDING EXTERIOR SHEATHING, WITHIN 6" OF FINISHED GRADE SHALL BE PRESERVATIVE-PRESSURE TREATED.

ANY WOOD, INCLUDING EXTERIOR WALL SHEATHING, LESS THAN 2" VERTICALLY FROM CONCRETE STEPS, PORCH SLABS, PATIO SLABS AND SIMILAR HARD HORIZONTAL SURFACES SHALL BE PRESERVATIVE PRESSURE TREATED.

PROTECTION OF WOOD AND WOOD-BASED PRODUCTS AGAINST DECAY AS REQUIRED BY R317.
PROTECTION AGAINST TERMITES AS REQUIRED BY R318.

FIRE BLOCKING TO COMPLY WITH R302.11.

REFER TO STRUCTURAL ENGINEERING PLANS BY OTHER.

CABINETS AND COUNTERTOPS
REFER TO OWNERS SCOPE OF WORK DOCUMENTS FOR CABINET, COUNTERTOP AND HARDWARE SELECTIONS.

INTERIOR TRIM
OF REFER TO OWNERS SCOPE OF WORK DOCUMENTS FOR REQUIRED INTERIOR TRIM PROFILES.

7 THERMAL & MOISTURE PROTECTION
WATER BARRIER THE WATER BARRIER SYSTEM IS AN INTEGRAL PART OF THE WALL SHEATHING SYSTEM.

THERMAL INSULATION
• INSULATION TO HAVE THE FOLLOWING MINIMUM R-VALUES:
• EXTERIOR WALLS R=15 MIN.
• SLOPED CEILINGS (WITH ATTIC SPACE) R=38 OR R=30 WHEREVER THE FULL HEIGHT OF UNCOMPRESSED R=38 INSULATION EXTENDS OVER THE WALL TOP PLATE AT THE EAVES.
• SLOPED CEILINGS (WITHOUT ATTIC SPACE) R=38 MIN., OR R=30 MIN. WHERE THERE IS NOT SUFFICIENT SPACE FOR REQ'D INSULATION.
• FLAT CEILINGS (WITH ATTIC SPACE) R=38 OR R=30 WHEREVER THE FULL HEIGHT OF UNCOMPRESSED R=38 INSULATION EXTENDS OVER THE WALL TOP PLATE AT THE EAVES.
• FLOORS R=19 MIN.
• REFER TO OWNERS SCOPE OF WORK DOCUMENTS FOR INSULATION TYPES AND ADDITIONAL REQUIREMENTS.

ARCHITECTURAL SHINGLE ROOFING - SHINGLE ROOFING SHALL BE DIMENSIONAL ASPHALT TYPE WITH DIMENSION FEATURES. SEE OWNERS SCOPE OF WORK DOCUMENTS FOR MANUFACTURER, STYLE, COLOR AND ADDITIONAL REQUIREMENTS FOR INSTALLATION AND ACCESSORIES.
• SHINGLES SHALL BE TESTED IN ACCORDANCE WITH AST D 7185.
• SHINGLES SHALL MEET THE CLASSIFICATION REQUIREMENTS FOR THE APPROPRIATE MAXIMUM BASIC WIND SPEED:
MAXIMUM BASIC WIND SPEED CLASSIFICATION REQUIREMENT
• REFER TO STRUCTURAL ENGINEERING PLANS BY OTHER.
• ROOFING SHALL BE INSTALLED OVER ONE LAYER OF ASPHALT IMPREGNATED 15# ROOFING FELT. 2 LAYERS FOR ROOF PITCHES 2:12 - 4:12.

VALLEY LININGS TO BE INSTALLED PER R905.2.8.2

GUTTERS TO BE MINIMUM 5" ALUMINUM OGEE STYLE WITH 4" CORRUGATED RECTANGULAR ALUMINUM DOWNSPOUTS AT LOCATIONS AS INDICATED ON THE DRAWINGS.

DOWNSPOUTS TO BE CONNECTED TO UNDERGROUND STORM PIPING AND ROUTED TO DISCHARGE LOCATIONS AS SPECIFIED BY THE GENERAL CONTRACTOR. 12" WIDE (2" THICKNESS) RIGID FOAM LOCATED AT TOP OF FOOTER, SLOPING AWAY FROM THE UNIT TO PREVENT CONCRETE OVERFLOW AND ALLOW PIPE TO TIGHTLY FIT TO STEM WALL.

UNDERGROUND DRAINPIPES TO BE PROVIDED AT ALL COURTYARD SLAB CUTOUT LANDSCAPE AREAS TO PREVENT POOLING WATER.

LAP SIDING - REFER TO OWNERS SCOPE OF WORK DOCUMENTS FOR MATERIAL, MANUFACTURER, STYLE, COLOR AND OTHER REQUIREMENTS.

EXTERIOR TRIM & SOFFITS - REFER TO OWNERS SCOPE OF WORK DOCUMENTS FOR MATERIAL, MANUFACTURER, STYLE, COLOR AND OTHER REQUIREMENTS.

PROVIDE EXTERIOR TRIM OF SIZES INDICATED ON THE DRAWINGS.

8 DOORS & WINDOWS
EXTERIOR PATIO DOORS AND SLIDING PATIO DOORS - REFER TO OWNERS SCOPE OF WORK DOCUMENTS FOR MANUFACTURER, STYLE COLOR AND HARDWARE SELECTIONS.
• SIZES AS INDICATED ON THE DRAWINGS.
• ALL DOORS TO HAVE LOW-E GLASS SAFETY GLAZING.

INTERIOR DOORS - REFER TO OWNERS SCOPE OF WORK DOCUMENTS FOR DOOR TYPE, STYLE AND HARDWARE SELECTIONS.
SIZES AS INDICATED ON THE DRAWINGS.

WINDOWS - REFER TO OWNERS SCOPE OF WORK DOCUMENTS FOR WINDOW MANUFACTURER, STYLE, COLOR AND HARDWARE SELECTIONS.
• SIZES AS INDICATED ON THE DRAWINGS.
• ALL WINDOWS TO HAVE LOW-E INSULATING GLASS
• WINDOW MANUFACTURER SHALL PROVIDE TEMPERED GLASS AS REQUIRED BY R308.4 AT ALL HAZARDOUS LOCATIONS.
• WINDOW FALL PROTECTION AS REQUIRED BY R312.2.
• WRITTEN INSTALLATION INSTRUCTIONS SHALL BE PROVIDED BY THE WINDOW MANUFACTURER FOR EACH WINDOW - SEE FULL INSTRUCTIONS FOR ALL ADDITIONAL REQUIREMENTS.
• ALL BEDROOM WINDOWS TO MEET EMERGENCY RESCUE OPENING CODE REQUIREMENTS.
• WINDOW TRIM TO BE OFFSET MIN. 1/4" WHERE WINDOW MEETS TRIM FOR CAULKING. COORDINATE WITH WINDOW SELECTION. PAD OUT THE TRIM IF NEEDED.
• TRIM MATERIAL PER OWNERS SCOPE OF WORK DOCUMENTS. SIZES AS INDICATED ON THE DRAWINGS.
• SEE CURRENT BUILDING CODE FOR ALL ADDITIONAL REQUIREMENTS.

9 FINISHES
DRYWALL WALLS AND CEILINGS- REFER TO OWNERS SCOPE OF WORK DOCUMENTS FOR REQUIRED DRYWALL FINISHES.
• PROVIDE TYPE-X GYPSUM PANELS AT LOCATIONS INDICATED ON THE DRAWINGS FOR FIRE-RATED ASSEMBLIES.
• ALL BATHROOMS TO HAVE MOISTURE-RESISTANT, PAPERLESS GYPSUM.
• PROVIDE 1/2" TILE BACKER BOARD IN LIEU OF DRYWALL AT ALL WALL LOCATIONS REQUIRING A TILE FINISH.

INTERIOR FINISHES - REFER TO OWNERS SCOPE OF WORK DOCUMENTS FOR ALL INTERIOR FLOOR, WALL AND CEILING FINISHES.

10 SPECIALTIES
BATH ACCESSORIES - REFER TO OWNERS SCOPE OF WORK DOCUMENTS FOR REQUIRED BATH ACCESSORIES.

FIREPLACE - REFER TO OWNERS SCOPE OF WORK DOCUMENTS FOR FIREPLACE REQUIREMENT AND SELECTIONS.

CLOSET ROODS AND SHELVING - REFER TO OWNERS SCOPE OF WORK DOCUMENTS FOR REQUIREMENTS AND SELECTIONS.

11 EQUIPMENT
APPLIANCES - REFER TO OWNERS SCOPE OF WORK DOCUMENTS FOR APPLIANCE SELECTIONS.

12 FURNISHINGS
SECTION NOT USED

13 SPECIAL CONSTRUCTION
SECTION NOT USED

14 CONVEYING SYSTEMS
SECTION NOT USED

22 PLUMBING
REFER TO PLUMBING PLANS BY OTHERS.

23 HVAC
REFER TO HVAC PLANS BY OTHERS.

26 ELECTRICAL
REFER TO ELECTRICAL PLANS BY OTHERS.

NEW HOME INC.

New Home Inc
1611 Jones Franklin,
Raleigh, NC, 27606

REV.#	DESCRIPTION	DATE
1		
2		
3		
4		
5		
6		
7		
8		

The Garner Craftsman at Cattail Preserve

General Notes and Specifications

DRAWN BY: Drew DiMeo

HANDING: RIGHT

ISSUE DATE: JJ

SHEET G-110

(c) 2025 New Home Inc

GENERAL FLOOR PLAN NOTES:

General Floor Plan Notes shall apply unless noted otherwise on plan.

1. Wall Heights: Typically 9'-1 1/2" at first floor and second floor, and 9'-1 1/2" at attics U.N.O. All walls are constructed using a double top plate. Splices at Double Top Plate do not need to occur at Vertical Studs but must be at least 24" apart from Joint in other Top Plate layer. Special wall heights are noted on plans where they occur.

2. Wall Thickness is typically 3 1/2". 2x6 frame shall be used at walls that back up to plumbing fixtures. Walls greater than 10' high shall be framed with 2x6 framing or greater and will be noted as a special condition where it occurs on plan.

3. Typical header height shall be 7'-8" AFF at First Floor, and 7'-4" AFF at Second Floor U.N.O.

4. Jacks: Openings up to 3'-4" wide shall have (1) 2x4 jack stud SPF on each side. Openings greater than 3'-4" wide shall have (2) 2x4 jack studs SPF on each side.

5. Soffits, Coffered Ceilings, Trey Ceilings and other significant ceiling plan elements are shown on the floor plans and are denoted as single dashed lines. Unless specifically call out as included, Kitchens include soffits over wall cabinetry.

6. Door & Window Frames, where occurring near corners, shall be a minimum of 4 1/2" from corner. Except for walk-in closets with doors near a corner, doors at closets shall be centered on closet.

7. Windows: Shall have at least (1) window in each sleeping room, that meets egress. Shall be provided with tempered glass at hazardous glazing areas. False windows shall be installed with obscure glazing.

8. Closets for clothing or coat storage shall be equipped with 1 rod/shelf. Closets for linen shall have 4 open equal shelves. Closets for pantries shall have 4 equal wood shelves, painted.

9. Stair treads shall be a min of 9" deep, risers shall be a maximum of 8 1/4", unless noted otherwise, per the current North Carolina Residential Code.

10. Handrails and Guards at stairs shall be 34" above the finished surface of the ramp surface of the stair. Handrails at landings and overlooks of multilevel spaces shall be 36" above finished floor. Guards (pickets or balusters) shall be spaced with no more than 4" between guards.

11. Attic Access shall be provided at all attic area with a height greater than 30". Minimum clear attic access shall be 20" x 30". Pull down stairs and access doors in knee walls meeting minimum criteria are also acceptable.

12. Garage Door to Living Space shall be 2'-8" x 6'-8" minimum size and shall be 20 minute fire rated and weather sealed.

13. Garage Walls, as a minimum, shall be separated from living space by installing 1/2" gypsum board on the garage side of the wall. With habitable space above, the inside of all garage walls require 1/2" GWB supporting 5/8" type X GWB on ceiling.

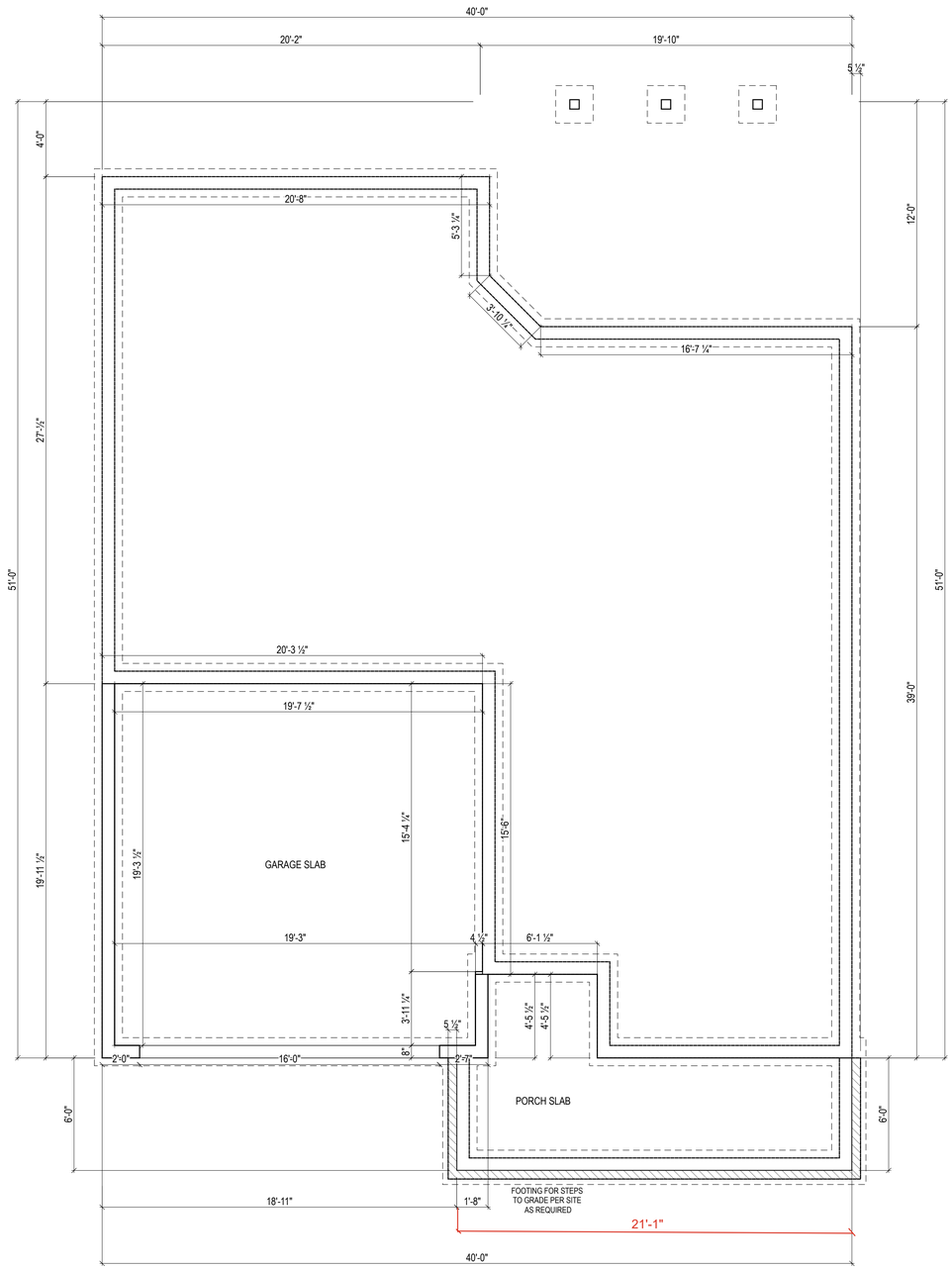

1 FOUNDATION PLAN - Crawlspace

1/4" = 1'-0" (WHEN PRINTED ON 22x34)
1/8" = 1'-0" (WHEN PRINTED ON 11x17)

NEW HOME INC.

New Home Inc
1611 Jones Franklin,
Raleigh, NC, 27606

REV.#	DESCRIPTION	DATE
1		
2		
3		
4		
5		
6		
7		
8		

The Garner Craftsman at Cattail Preserve

FOUNDATION PLAN

DRAWN BY: Drew DiMeo

HANDING: RIGHT

ISSUE DATE: 11/11/1111

SHEET A-100

(c) 2025 New Home Inc

GENERAL FLOOR PLAN NOTES:

General Floor Plan Notes shall apply unless noted otherwise on plan.

1. Wall Heights: Typically 9'-1 1/2" at first floor and second floor, and 9'-1 1/2" at attics U.N.O. All walls are constructed using a double top plate. Splices at Double Top Plate do not need to occur at Vertical Studs but must be at least 24" apart from Joint in other Top Plate layer. Special wall heights are noted on plans where they occur.

2. Wall Thickness is typically 3 1/2". 2x6 frame shall be used at walls that back up to plumbing fixtures. Walls greater than 10' high shall be framed with 2x6 framing or greater and will be noted as a special condition where it occurs on plan.

3. Typical header height shall be 7'-8" AFF at First Floor, and 7'-4" AFF at Second Floor U.N.O.

4. Jacks: Openings up to 3'-4" wide shall have (1) 2x4 jack stud SPF on each side. Openings greater than 3'-4" wide shall have (2) 2x4 jack studs SPF on each side.

5. Soffits, Coffered Ceilings, Trey Ceilings and other significant ceiling plan elements are shown on the floor plans and are denoted as single dashed lines. Unless specifically call out as included, Kitchens include soffits over wall cabinetry.

6. Door & Window Frames, where occurring near corners, shall be a minimum of 4 1/2" from corner. Except for walk-in closets with doors near a corner, doors at closets shall be centered on closet.

7. Windows: Shall have at least (1) window in each sleeping room, that meets egress. Shall be provided with tempered glass at hazardous glazing areas. False windows shall be installed with obscure glazing.

8. Closets for clothing or coat storage shall be equipped with 1 rod/shelf. Closets for linen shall have 4 open equal shelves. Closets for pantries shall have 4 equal wood shelves, painted.

9. Stair treads shall be a min of 9" deep, risers shall be a maximum of 8 1/4", unless noted otherwise, per the current North Carolina Residential Code.

10. Handrails and Guards at stairs shall be 34" above the finished surface of the ramp surface of the stair. Handrails at landings and overlooks of multilevel spaces shall be 36" above finished floor. Guards (pickets or balusters) shall be spaced with no more than 4" between guards.

11. Attic Access shall be provided at all attic area with a height greater than 30". Minimum clear attic access shall be 20" x 30". Pull down stairs and access doors in knee walls meeting minimum criteria are also acceptable.

12. Garage Door to Living Space shall be 2'-8" x 6'-8" minimum size and shall be 20 minute fire rated and weather sealed.

13. Garage Walls, as a minimum, shall be separated from living space by installing 1/2" gypsum board on the garage side of the wall. With habitable space above, the inside of all garage walls require 1/2" GWB supporting 5/8" type X GWB on ceiling.

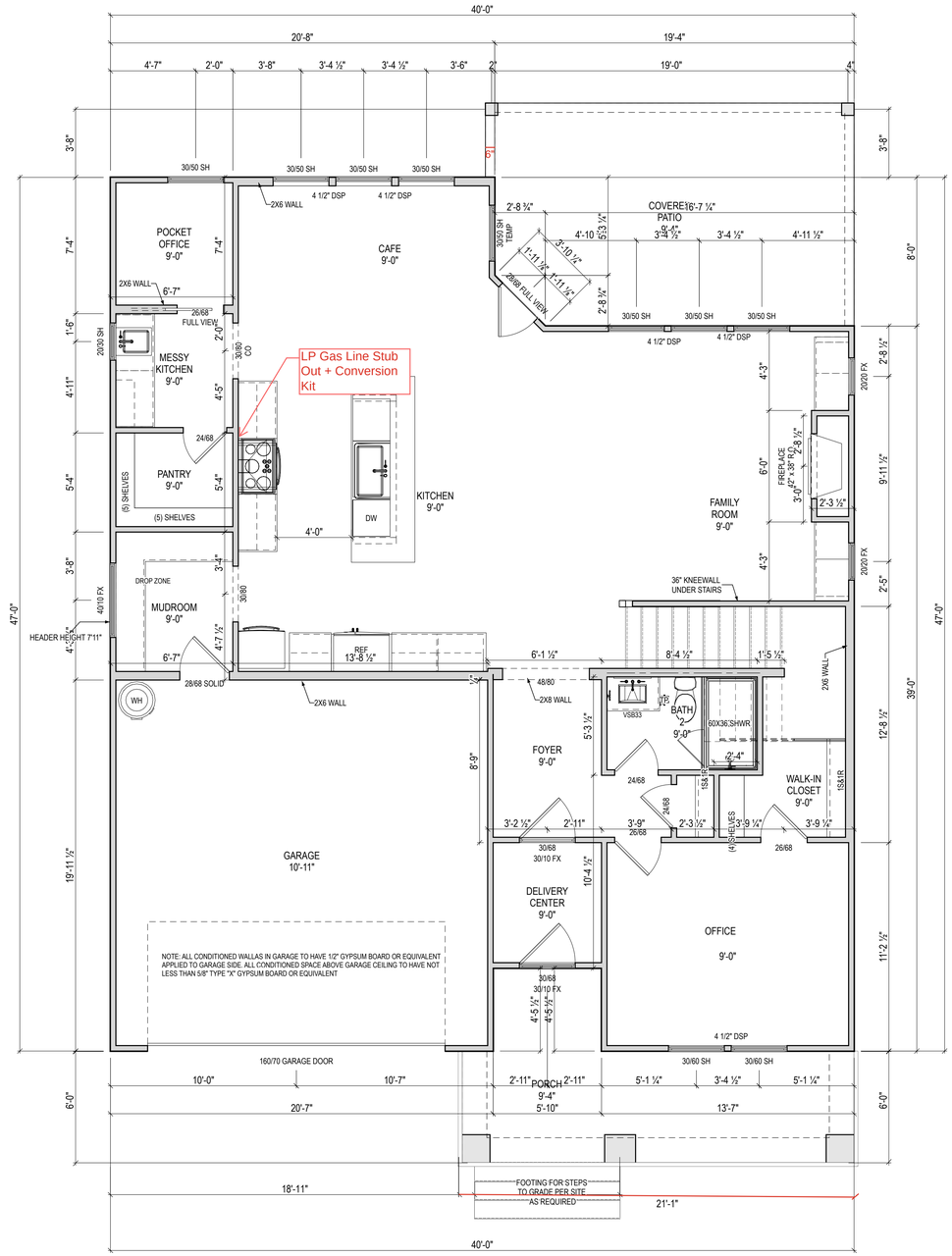

1 First Floor Plan

1/4" = 1'-0" (WHEN PRINTED ON 22x34)
1/8" = 1'-0" (WHEN PRINTED ON 11x17)

NEW HOME INC.

New Home Inc
1611 Jones Franklin,
Raleigh, NC, 27606

REV #	DATE	DESCRIPTION
1		
2		
3		
4		
5		
6		
7		
8		

The Garner Craftsman at Cattail Preserve

First Floor Plan

DRAWN BY: Drew DiMeo

HANDING: RIGHT

ISSUE DATE: 11/11/1111

SHEET A-110

(c) 2025 New Home Inc

GENERAL FLOOR PLAN NOTES:

General Floor Plan Notes shall apply unless noted otherwise on plan.

1. Wall Heights: Typically 9'-1 1/2" at first floor and second floor, and 9'-1 1/2" at attics U.N.O. All walls are constructed using a double top plate. Splices at Double Top Plate do not need to occur at Vertical Studs but must be at least 24" apart from Joint in other Top Plate layer. Special wall heights are noted on plans where they occur.

2. Wall Thickness is typically 3 1/2". 2x6 frame shall be used at walls that back up to plumbing fixtures. Walls greater than 10' high shall be framed with 2x6 framing or greater and will be noted as a special condition where it occurs on plan.

3. Typical header height shall be 7'-8" AFF at First Floor, and 7'-4" AFF at Second Floor U.N.O.

4. Jacks: Openings up to 3'-4" wide shall have (1) 2x4 jack stud SPF on each side. Openings greater than 3'-4" wide shall have (2) 2x4 jack studs SPF on each side.

5. Soffits, Coffered Ceilings, Trey Ceilings and other significant ceiling plan elements are shown on the floor plans and are denoted as single dashed lines. Unless specifically call out as included, Kitchens include soffits over wall cabinetry.

6. Door & Window Frames, where occurring near corners, shall be a minimum of 4 1/2" from corner. Except for walk-in closets with doors near a corner, doors at closets shall be centered on closet.

7. Windows: Shall have at least (1) window in each sleeping room, that meets egress. Shall be provided with tempered glass at hazardous glazing areas. False windows shall be installed with obscure glazing.

8. Closets for clothing or coat storage shall be equipped with 1 rod/shelf. Closets for linen shall have 4 open equal shelves. Closets for pantries shall have 4 equal wood shelves, painted.

9. Stair treads shall be a min of 9" deep, risers shall be a maximum of 8 1/4", unless noted otherwise, per the current North Carolina Residential Code.

10. Handrails and Guards at stairs shall be 34" above the finished surface of the ramp surface of the stair. Handrails at landings and overlooks of multilevel spaces shall be 36" above finished floor. Guards (pickets or balusters) shall be spaced with no more than 4" between guards.

11. Attic Access shall be provided at all attic area with a height greater than 30". Minimum clear attic access shall be 20" x 30". Pull down stairs and access doors in knee walls meeting minimum criteria are also acceptable.

12. Garage Door to Living Space shall be 2'-8" x 6'-8" minimum size and shall be 20 minute fire rated and weather sealed.

13. Garage Walls, as a minimum, shall be separated from living space by installing 1/2" gypsum board on the garage side of the wall. With habitable space above, the inside of all garage walls require 1/2" GWB supporting 5/8" type X GWB on ceiling.

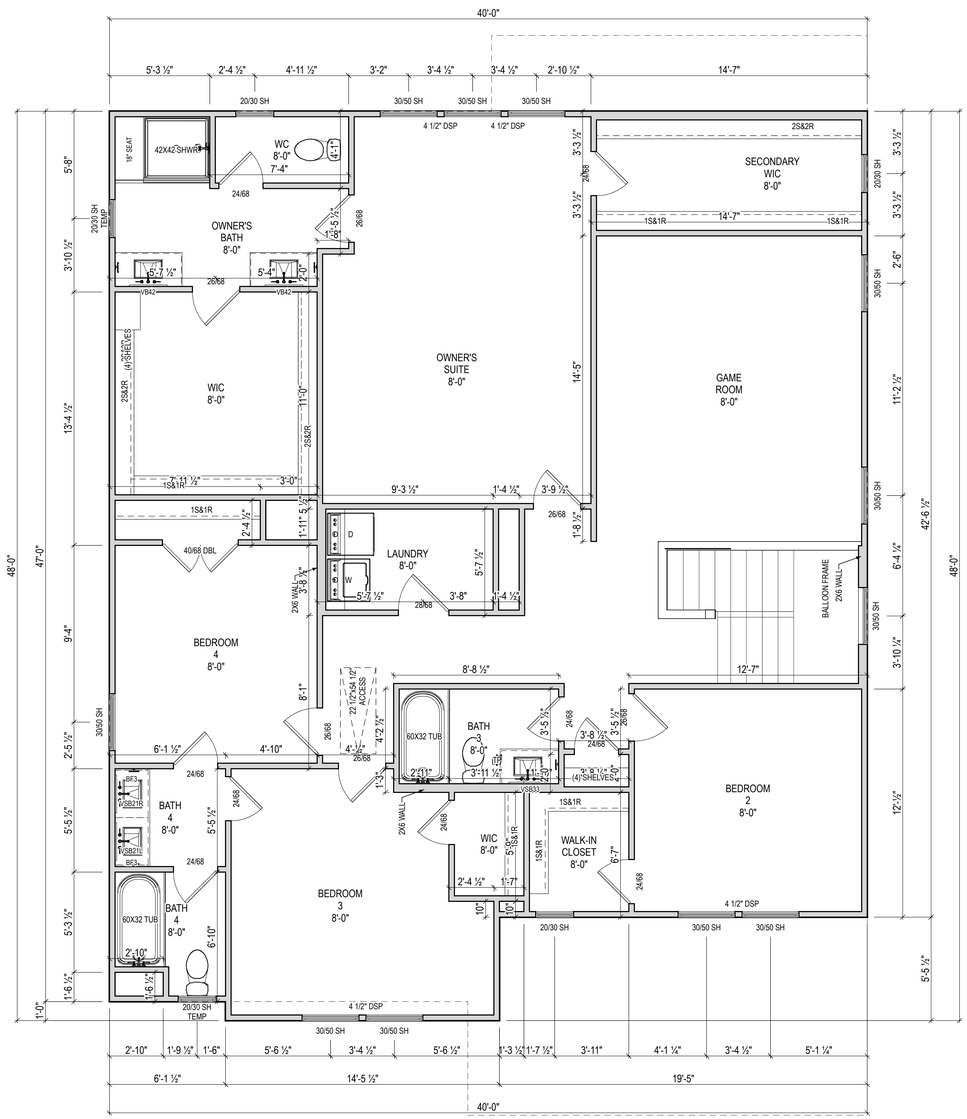

1 Second Floor Plan

1/4" = 1'-0" (WHEN PRINTED ON 22x34)
1/8" = 1'-0" (WHEN PRINTED ON 11x17)

NEW HOME INC.

New Home Inc
1611 Jones Franklin,
Raleigh, NC, 27606

REV.#	DATE	DESCRIPTION
1		
2		
3		
4		
5		
6		
7		
8		

The Garner Craftsman at Cattail Preserve

Second Floor Plan

DRAWN BY: Drew DiMeo

HANDING: RIGHT

ISSUE DATE: 11/11/1111

SHEET A-120

(c) 2025 New Home Inc

GENERAL ROOF PLAN NOTES:

1. ALL ROOF OVERHANGS TO BE 1'-0" UNLESS NOTED OTHERWISE

2. ALL TRAY CEILING TRAY HEIGHTS TO BE 12" UNLESS NOTED OTHERWISE

3. THESE PLANS ARE NOT TO BE SCALED FOR CONSTRUCTION PURPOSES.

4. IT IS THE CONTRACTOR'S RESPONSIBILITY TO VERIFY THE ACCURACY OF ALL DETAILS AND DIMENSIONS.

5. 8'×16' ATTIC STORAGE PLATFORM - PROVIDE 3/4" APA RATED PLYWOOD SUB-FLOORING OR OSB SHEATHING RATED FOR 20#/SF ON BOTTOM CHORD OF TRUSSES. TRUSS MANUFACTURER TO ACCOUNT FOR ADDITIONAL LOADS

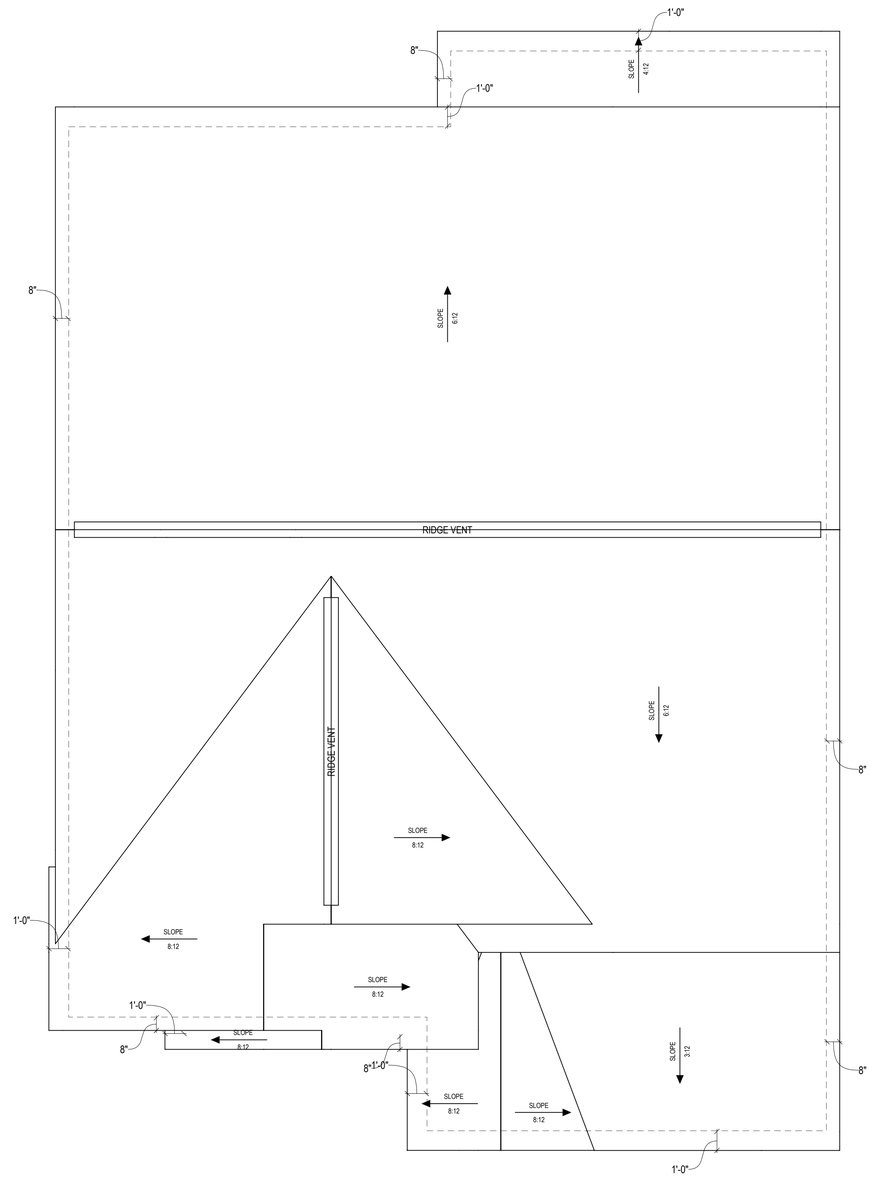

1 Roof Plan

1/4" = 1'-0" (WHEN PRINTED ON 22x34)
1/8" = 1'-0" (WHEN PRINTED ON 11x17)

NEW HOME INC.

New Home Inc
1611 Jones Franklin,
Raleigh, NC, 27606

REV.#	DESCRIPTION	DATE
1		
2		
3		
4		
5		
6		
7		
8		

The Garner Craftsman at Cattail Preserve

Roof Plan

DRAWN BY: Drew DiMeo

HANDING: RIGHT

ISSUE DATE: 11/11/1111

SHEET A-200

(c) 2025 New Home Inc

GENERAL ELEVATION NOTES:

General Elevation Notes shall apply unless noted otherwise on plan.

1. Roof shall be finished with architectural composition shingles with slopes as noted on plan.

2. Ridge Vent shall be provided and installed on all ridges greater than 6' in length per manufacturer's specifications.

3. Soffit Vent shall be continuous soffit vent.

4. House Wrap, "tyvek" or approved equal shall be installed over entire exterior wall per manufacturer's specifications and recommendations.

5. Flashing shall be provided above all door and window openings, above finish wall material changes and at wall surfaces where lower roof areas abut vertical wall surfaces.

6. Porch Railings shall be provided at all porch walking surfaces greater than 30" above adjacent finished grade. It shall be 36" high with guards spaced no more than 4" apart. Consult community specifications for material.

7. Finish Wall Material shall be as noted on elevation drawings.

8. Brick Veneer, if included on elevation shall be tied to wall surface with galvanized corrugated metal ties at a rate of 24" oc horizontally and 16" oc vertically so that no more than 2.67sf of brick is supported by (1) tie. Space between face of wall and back face of brick shall be limited to a maximum of 1". Flashing shall be provided behind brick above all wall openings and at base of brick wall. Flashing shall be a minimum of 6-mil poly or other corrosion resistant material and shall be installed so that it laps under the house wrap material a minimum of 2". Weepholes shall be provided at a rate of 48" oc and shall not be less than 3/16" in diameter and shall be located immediately above flashing.

9. Brick Veneer Support Lintels shall be provided if brick veneer is included on elevation. Lintels shall be provided as listed in the following schedule and shall have a minimum bearing length of 6". Masonry Lintels shall be provided so that deflection is limited to L/600.

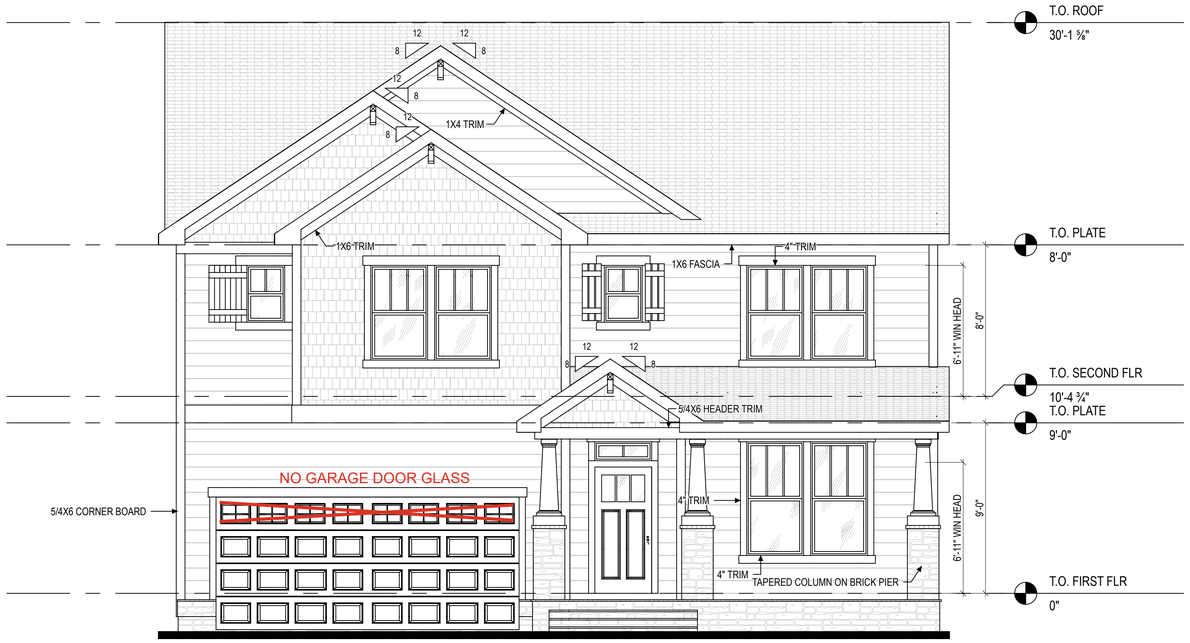

1 Front Elevation

1/4" = 1'-0" (WHEN PRINTED ON 22x34)
1/8" = 1'-0" (WHEN PRINTED ON 11x17)

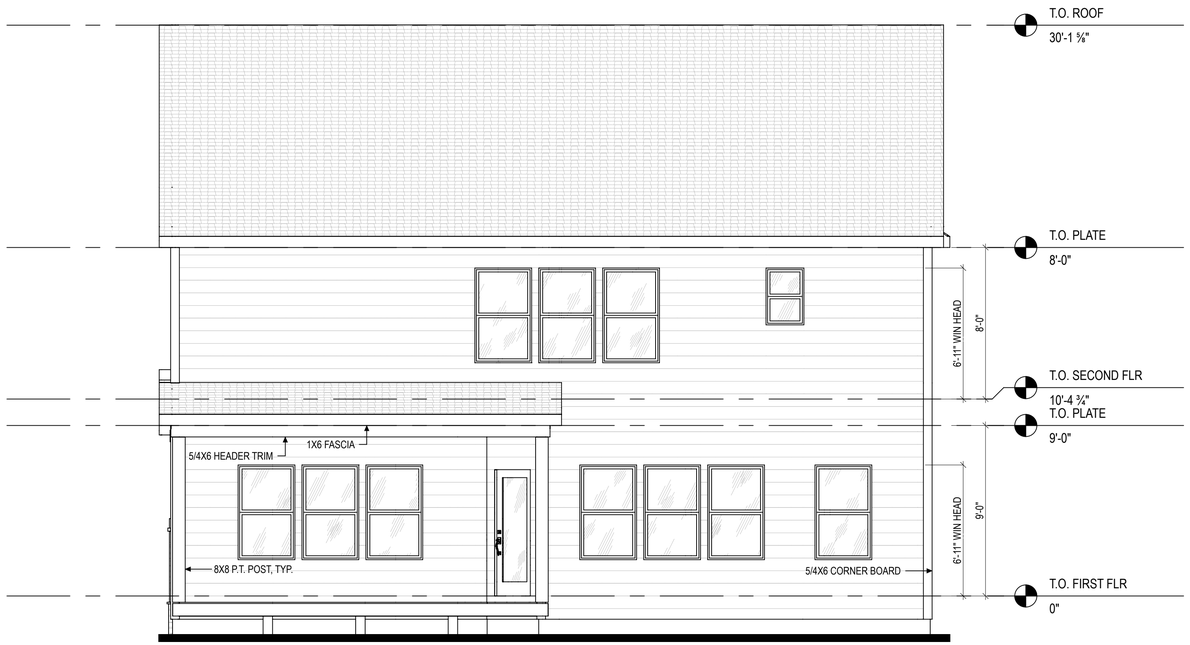

2 Back Elevation

1/4" = 1'-0" (WHEN PRINTED ON 22x34)
1/8" = 1'-0" (WHEN PRINTED ON 11x17)

NEW HOME INC.

New Home Inc
1611 Jones Franklin,
Raleigh, NC, 27606

REV #	DATE	DESCRIPTION
1		
2		
3		
4		
5		
6		
7		
8		

The Selma Craftsman at {{ CommunityName }}

Elevations - Front and Back

DRAWN BY: JJ

HANDING: LEFT

ISSUE DATE: 11/11/1111

SHEET A-310

(c) 2025 New Home Inc

GENERAL ELEVATION NOTES:

General Elevation Notes shall apply unless noted otherwise on plan.

1. Roof shall be finished with architectural composition shingles with slopes as noted on plan.

2. Ridge Vent shall be provided and installed on all ridges greater than 6' in length per manufacturer's specifications.

3. Soffit Vent shall be continuous soffit vent.

4. House Wrap, "tyvek" or approved equal shall be installed over entire exterior wall per manufacturer's specifications and recommendations.

5. Flashing shall be provided above all door and window openings, above finish wall material changes and at wall surfaces where lower roof areas abut vertical wall surfaces.

6. Porch Railings shall be provided at all porch walking surfaces greater than 30" above adjacent finished grade. It shall be 36" high with guards spaced no more than 4" apart. Consult community specifications for material.

7. Finish Wall Material shall be as noted on elevation drawings.

8. Brick Veneer, if included on elevation shall be tied to wall surface with galvanized corrugated metal ties at a rate of 24" oc horizontally and 16" oc vertically so that no more than 2.67sf of brick is supported by (1) tie. Space between face of wall and back face of brick shall be limited to a maximum of 1". Flashing shall be provided behind brick above all wall openings and at base of brick wall. Flashing shall be a minimum of 6-mil poly or other corrosion resistant material and shall be installed so that it laps under the house wrap material a minimum of 2". Weepholes shall be provided at a rate of 48" oc and shall not be less than 3/16" in diameter and shall be located immediately above flashing.

9. Brick Veneer Support Lintels shall be provided if brick veneer is included on elevation. Lintels shall be provided as listed in the following schedule and shall have a minimum bearing length of 6". Masonry Lintels shall be provided so that deflection is limited to L/600.

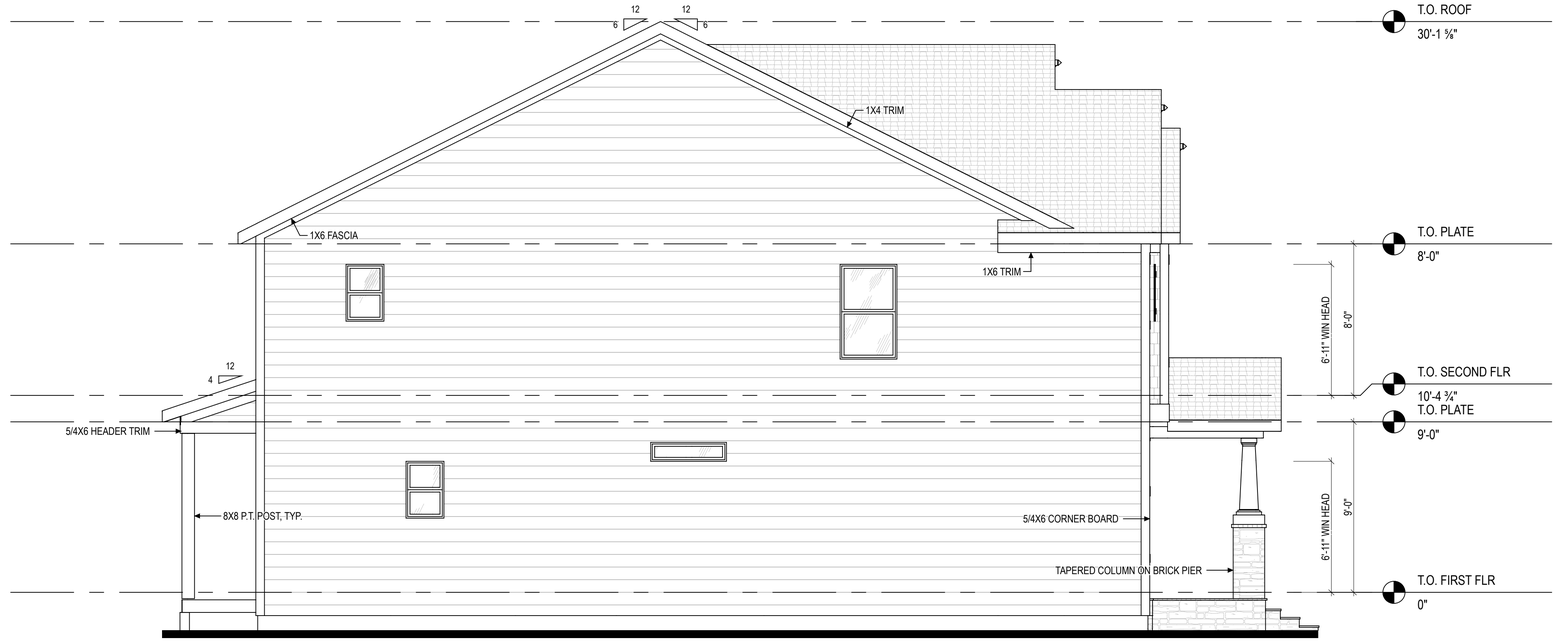

1 Left Elevation

1/4" = 1'-0" (WHEN PRINTED ON 22x34)
1/8" = 1'-0" (WHEN PRINTED ON 11x17)

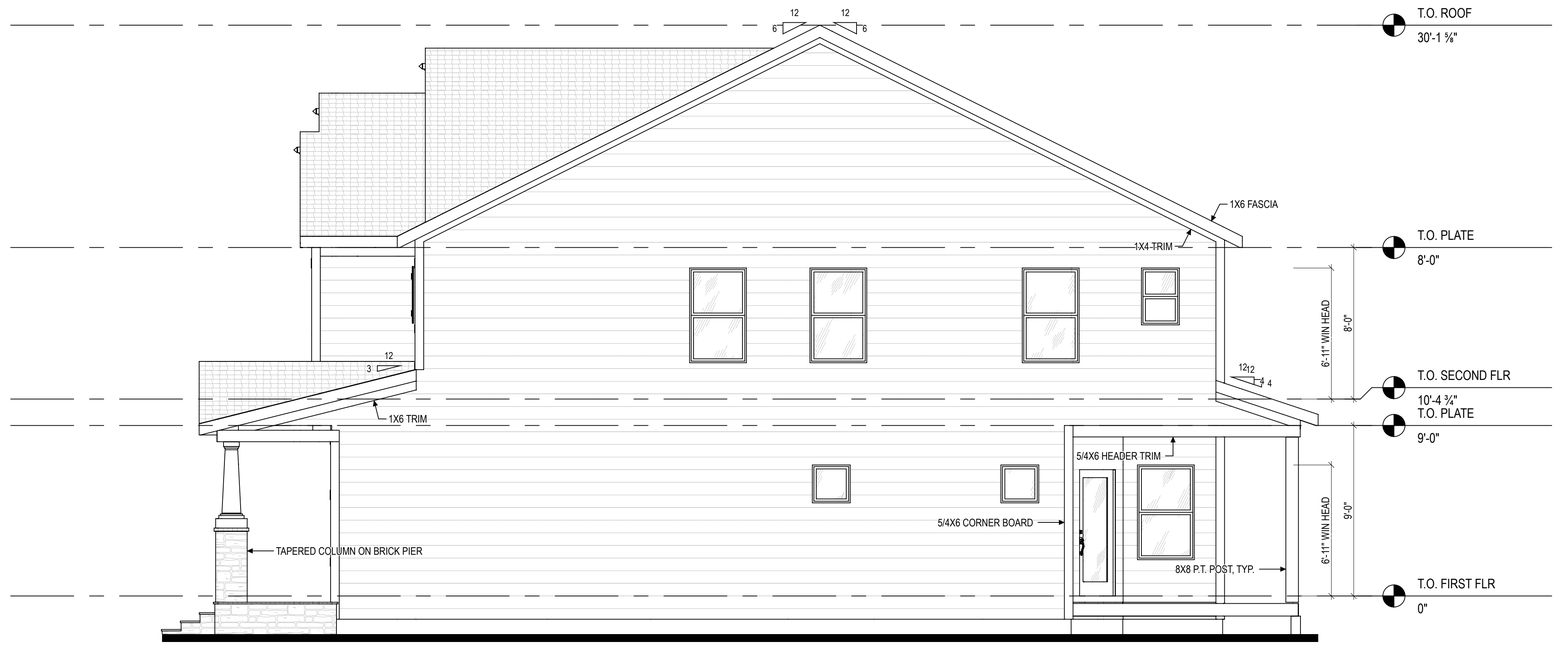

2 Right Elevation

1/4" = 1'-0" (WHEN PRINTED ON 22x34)
1/8" = 1'-0" (WHEN PRINTED ON 11x17)

NEW HOME INC.

New Home Inc
1611 Jones Franklin,
Raleigh, NC, 27606

REV #	DATE	DESCRIPTION
1		
2		
3		
4		
5		
6		
7		
8		

The Garner Craftsman at Cattail Preserve

Elevations - Front and Back

DRAWN BY: Drew DiMeo

HANDING: LEFT

ISSUE DATE: 11/11/1111

SHEET A-320

(c) 2025 New Home Inc

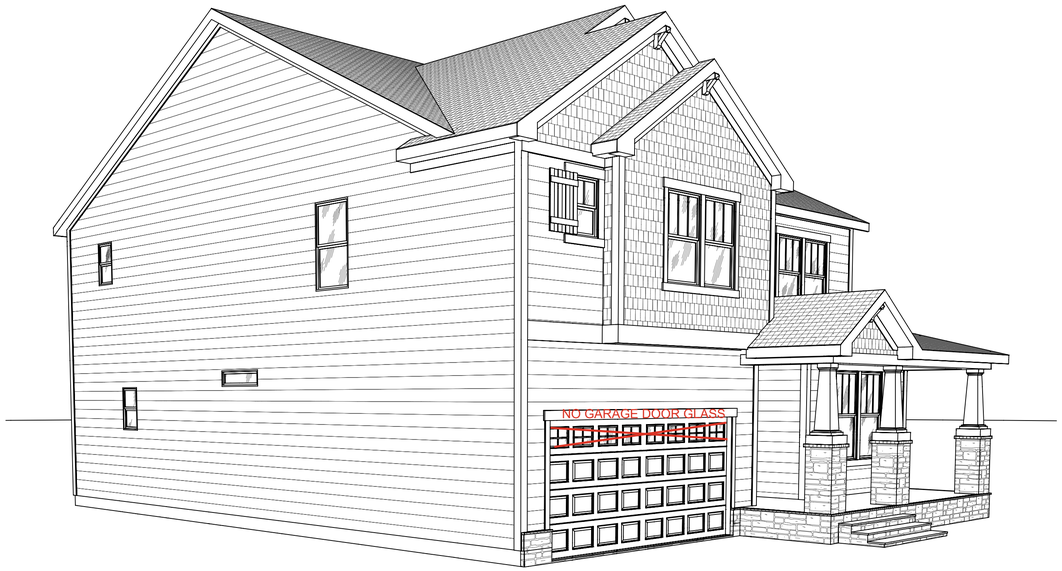

1 Front Left
NTS

1 Front Right
NTS

1 Back Left
NTS

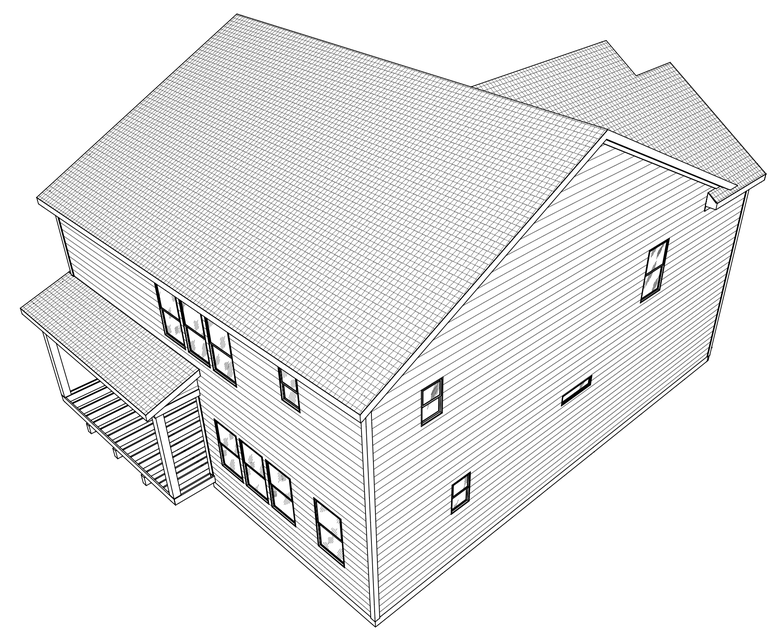

1 Back Right
NTS

NEW HOME INC.

New Home Inc
1611 Jones Franklin,
Raleigh, NC, 27606

REV #	DESCRIPTION	DATE
1		
2		
3		
4		
5		
6		
7		
8		

The Selma Craftsman at {{ CommunityName }}

Perpectives

DRAWN BY: JJ

HANDING: RIGHT

ISSUE DATE: 11/11/1111

SHEET P-100

(c) 2025 New Home Inc

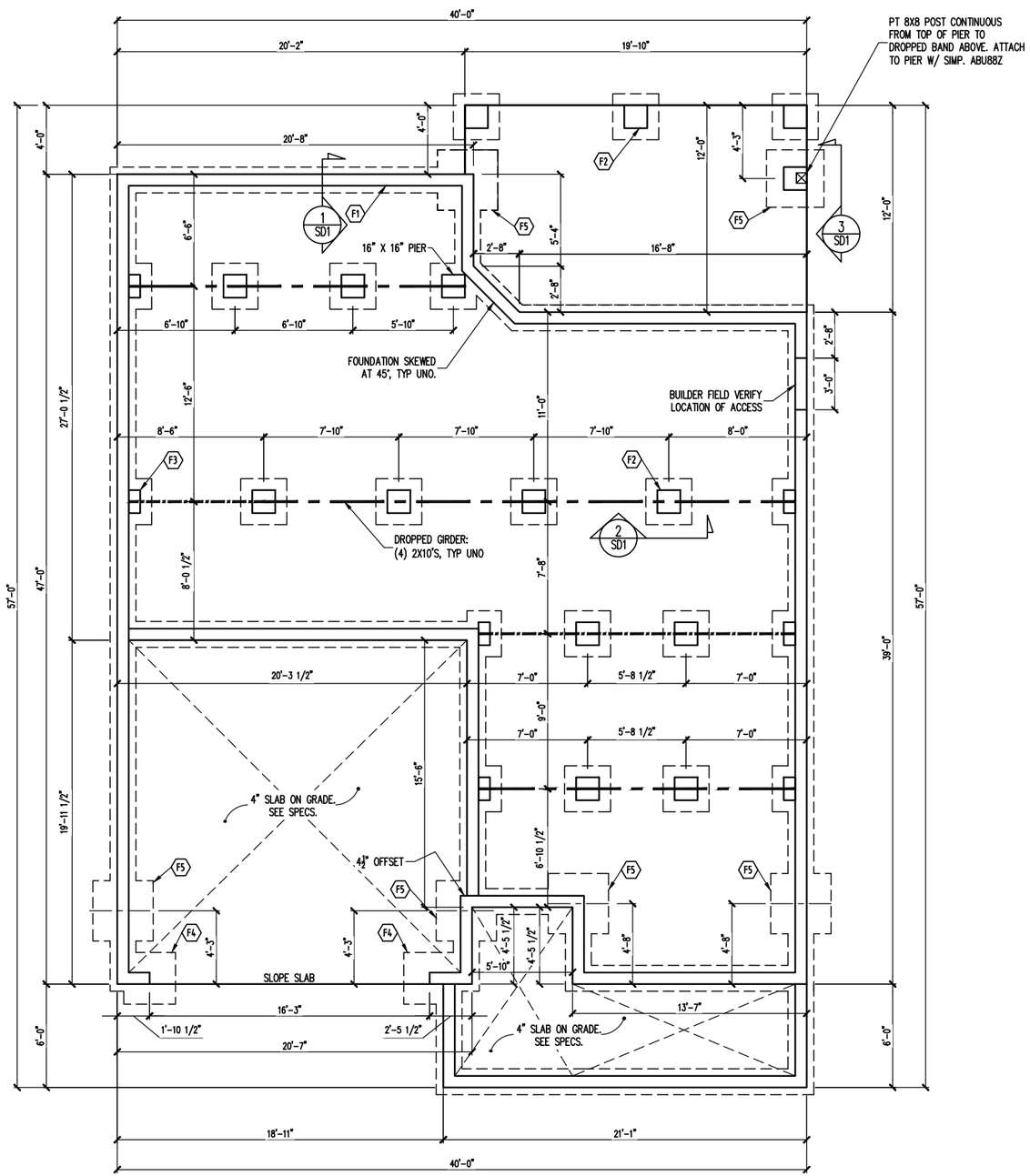

FOUNDATION SCHEDULE

F1	8" THK MASONRY FND WALL ON A 18" X 8" THK CONT POUR CONC FTG, TYP UNO. OPTION: (2) INTEGRATED 4" MASONRY WYTHES
F2	16" SQ. MASONRY PIER ON A 32" SQ. X 10" THK CONC FTG TYP UNO.
F3	8" X 16" CMU PILASTER, PROJECT FTG 8" X 8" THK, TYP UNO
F4	ENLARGE FOOTING TO 36" SQ. X 12" THK. SOLID MASONRY ABOVE.
F5	ENLARGE FOOTING TO 42" SQ. X 12" THK. SOLID MASONRY ABOVE.

NOTES:
-HEIGHT AND BACKFILL LIMITATIONS FOR FOUNDATION WALLS ARE TO BE GOVERNED BY THE NCSBC, LATEST EDITION. REINFORCEMENT AND GROUTING SHALL BE DETERMINED BY FINAL SITE CONDITIONS.

-BUILDER TO FIELD LOCATE CRAWLSPACE ACCESS OPENING WITH MINIMUM DIMENSIONS OF 18X24. DO NOT LOCATE ACCESS OPENING BELOW POINT LOADS FROM ABOVE WITHOUT ENGINEER APPROVAL.

FOUNDATION PLAN

1/8" = 1'-0"

NORTH CAROLINA PROFESSIONAL SEAL 055544 ENGINEER CODY M. CHILDERS 05/28/2025

The structural design of this plan is the property of Engineering Tech Associates, P.A. These plans are for the one time use at the location and for the client listed. Engineering Tech Associates, P.A. assumes no liability for these plans if they are reproduced, in whole or in part, for construction at any other location without written permission from Engineering Tech Associates, P.A.

Engineering Tech ASSOCIATES, P.A.
STRUCTURAL ENGINEERS
License No. C-3870
318 W Millbrook Rd. Unit 201
Raleigh, North Carolina 27609
Phone (919) 844-1661

REV #	REF PROJ #	DATE

SCOPE: NEW HOME INC.
STRUCTURAL ADDENDUM
LOC: 42 DUNCANS CREEK

ENG: CMC/ZCH
DATE: 5/28/2025

GARNER
CRAFTSMAN

PROJECT NO.
25-65-176

SHEET NO.
S1
1 of 8

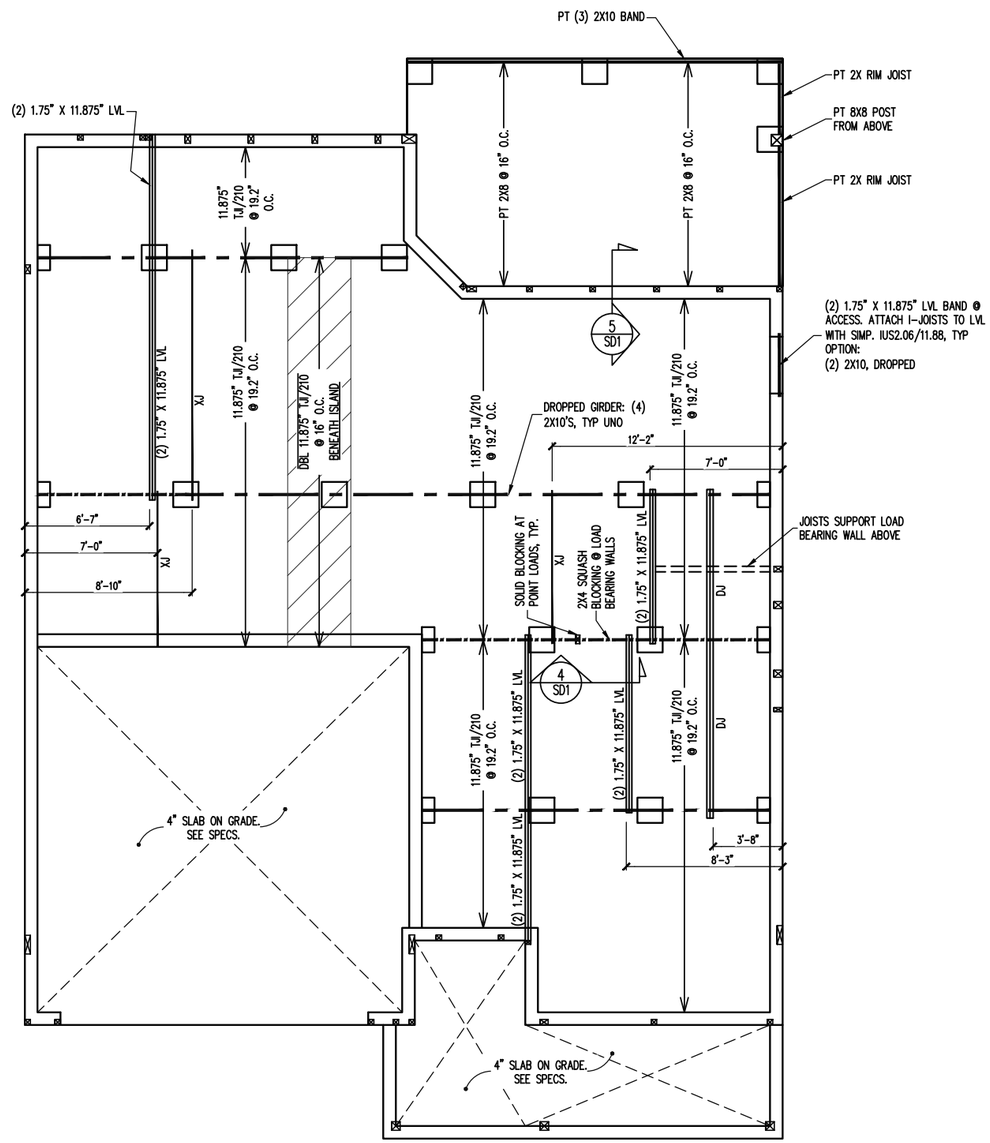

GIRDER LEGEND

ALL GIRDERS (4) 2X10'S, TYP UNO. BOLTING NOT REQUIRED FOR DROPPED GIRDERS.

I-JOIST SQUASH BLOCKING REQUIRED

NOT REQUIRED

CRAWLSPACE FRAMING PLAN

1/8" = 1'-0"

NORTH CAROLINA PROFESSIONAL ENGINEER SEAL 055544 CODY M. CHILDERS 05/28/2025

The structural design of this plan is the property of Engineering Tech Associates, P.A. These plans are for the one time use at the location and for the client listed. Engineering Tech Associates, P.A. assumes no liability for these plans if they are reproduced, in whole or in part, for construction at any other location without written permission from Engineering Tech Associates, P.A.

Engineering Tech ASSOCIATES, P.A.
STRUCTURAL ENGINEERS
License No. C-3870
318 W Millbrook Rd. Unit 201
Raleigh, North Carolina 27609
Phone (919) 844-1661

NEW HOME INC.
STRUCTURAL ADDENDUM

REV #	REF PROJ #	DATE

SCOPE:
LOC: 42 DUNCANS CREEK

ENG: CMC/ZCH
DATE: 5/28/2025

GARNER CRAFTSMAN

PROJECT NO. 25-65-176

SHEET NO. S2

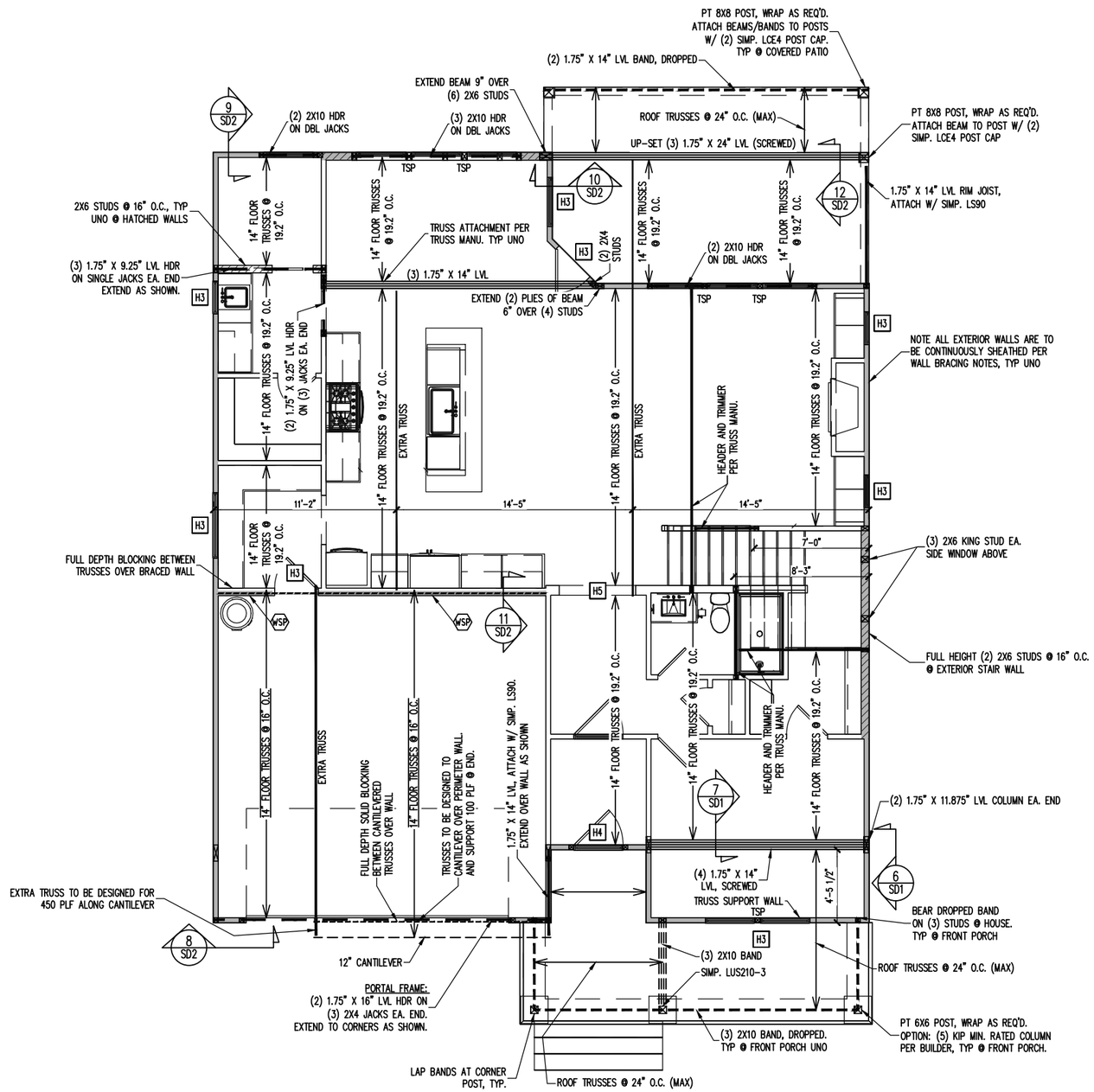

CONSTRUCTION SPECIFICATIONS

INSTANT REFERENCES

REFER TO THE CONSTRUCTION SPECIFICATIONS SECTIONS FOR THE FOLLOWING INFORMATION:

PART 1.01: CURRENT GOVERNING CODE

PART 14: STUD SUPPORT FOR BEAMS

PART 17: KING STUDS FOR EXTERIOR WALLS

SEE DETAIL / CONSTRUCTION SPECIFICATIONS SHEETS FOR I-JOISTS ALLOWABLE SUBSTITUTIONS

WALL BRACING

SHADED WALLS:

ALL EXTERIOR STUD WALLS, EXTERIOR SIDE, ARE TO BE CONTINUOUSLY SHEATHED WITH 7/16 APA RATED OSB NAILED TO STUDS WITH 8d NAILS @ 6" O.C. AT PANEL EDGES, 12" O.C. IN PANEL FIELD.

WSP – ONE SIDE OF INTERIOR WALL OR INSIDE OF EXTERIOR WALL WITH 3/8" MIN. THICKNESS WOOD STRUCTURAL PANELING. ATTACH WSP TO STUD WALL WITH 8d NAILS @ 6" O.C. AT PANEL EDGES, 12" O.C. IN PANEL FIELD.

NOTES:
PROVIDED CONTINUOUS SHEATHING = 180' MIN.

REFERENCE PART 16.02 OF CONSTRUCTION SPECIFICATIONS FOR GENERAL WIND BRACING INFORMATION.

HEADER SCHEDULE

H1 SINGLE 2X4 TURNED FLAT (A)

H2 (2) 2X4'S ON SINGLE JACKS (B)

H3 (2) 2X10'S ON SINGLE JACKS (C)

H4 (2) 1.75" X 9.25" LVL'S ON DBL JACKS

H5 (3) 2X10'S ON SINGLE JACKS

(A) TYPICAL FOR INTERIOR NON LOAD BEARING WALLS ONLY, ROUGH OPENING 38" MAX.

(B) TYPICAL FOR INTERIOR NON LOAD BEARING WALLS ONLY, ROUGH OPNG 38" TO 74" MAX.

(C) TYPICAL FOR ALL CONDITIONS NOT LISTED IN (A) OR (B) UNO.

NOTES:
-HEADERS IN NON LOAD BEARING INTERIOR WALLS ARE NOT LABELED.

1ST FLOOR FRAMING PLAN

WALLS AND CEILING 1/8" = 1'-0"

NORTH CAROLINA PROFESSIONAL ENGINEER SEAL 055544 CODY M. CHILLDRESS 05/28/2025

The structural design of this plan is the property of Engineering Tech Associates, P.A. These plans are for the one time use at the location and for the client listed. Engineering Tech Associates, P.A. assumes no liability for these plans if they are reproduced, in whole or in part, for construction at any other location without written permission from Engineering Tech Associates, P.A.

Engineering Tech ASSOCIATES, P.A.
STRUCTURAL ENGINEERS
License No. C-3870
318 W Millbrook Rd. Unit 201
Raleigh, North Carolina 27609
Phone (919) 844-1661

REV #	REF PROJ #	DATE

SCOPE: NEW HOME INC.
STRUCTURAL ADDENDUM

LOC: 42 DUNCANS CREEK

ENG: CMC/ZCH
DATE: 5/28/2025

GARNER CRAFTSMAN

PROJECT NO. 25-65-176

SHEET NO. S3

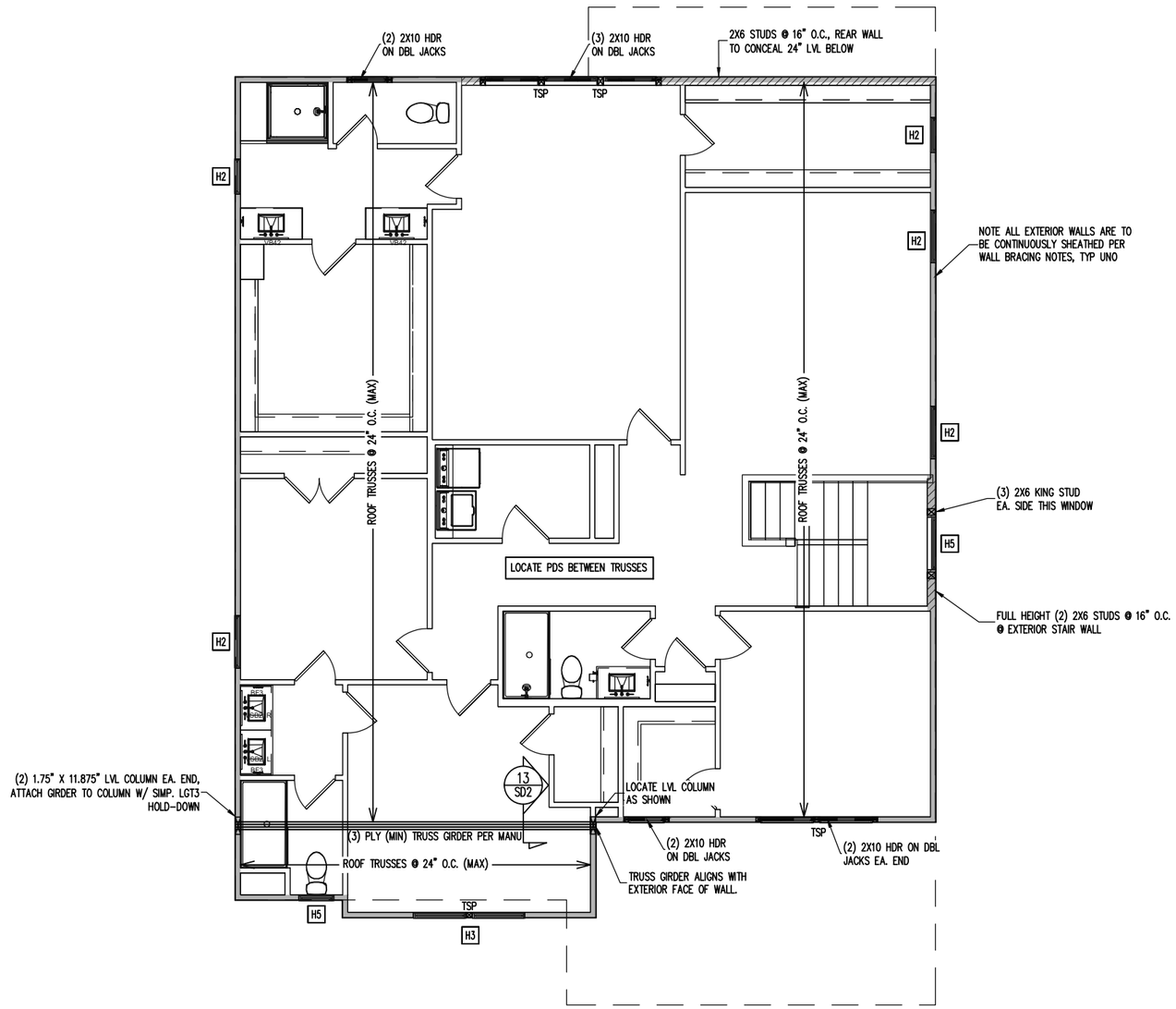

CONSTRUCTION SPECIFICATIONS

INSTANT REFERENCES

REFER TO THE CONSTRUCTION SPECIFICATIONS SECTIONS FOR THE FOLLOWING INFORMATION:

PART 1.01: CURRENT GOVERNING CODE

PART 14: STUD SUPPORT FOR BEAMS

PART 17: KING STUDS FOR EXTERIOR WALLS

SEE DETAIL / CONSTRUCTION SPECIFICATIONS SHEETS FOR I-JOISTS ALLOWABLE SUBSTITUTIONS

WALL BRACING

SHADED WALLS:

ALL EXTERIOR STUD WALLS, EXTERIOR SIDE, ARE TO BE CONTINUOUSLY SHEATHED WITH 7/16 APA RATED OSB NAILED TO STUDS WITH 8d NAILS @ 6" O.C. AT PANEL EDGES, 12" O.C. IN PANEL FIELD.

NOTES:
PROVIDED CONTINUOUS SHEATHING = 176' MIN.

REFERENCE PART 16.02 OF CONSTRUCTION SPECIFICATIONS FOR GENERAL WIND BRACING INFORMATION.

HEADER SCHEDULE

H1 SINGLE 2X4 TURNED FLAT (A)

H2 (2) 2X4'S ON SINGLE JACKS (B)

H3 (2) 2X10'S ON SINGLE JACKS (C)

H4 (2) 1.75" X 9.25" LVL'S ON DBL JACKS

H5 (3) 2X10'S ON SINGLE JACKS

(A) TYPICAL FOR INTERIOR NON LOAD BEARING WALLS ONLY, ROUGH OPENING 38" MAX.

(B) TYPICAL FOR INTERIOR NON LOAD BEARING WALLS ONLY, ROUGH OPNG 38" TO 74" MAX.

(C) TYPICAL FOR ALL CONDITIONS NOT LISTED IN (A) OR (B) UNO.

NOTES:
-HEADERS IN NON LOAD BEARING INTERIOR WALLS ARE NOT LABELED.

2ND FLOOR FRAMING PLAN

WALLS AND CEILING 1/8" = 1'-0"

NORTH CAROLINA PROFESSIONAL ENGINEER SEAL 055544 CODY M. CHILDERS 05/28/2025

The structural design of this plan is the property of Engineering Tech Associates, P.A. These plans are for the one time use at the location and for the client listed. Engineering Tech Associates, P.A. assumes no liability for these plans if they are reproduced, in whole or in part, for construction at any other location without written permission from Engineering Tech Associates, P.A.

Engineering Tech ASSOCIATES, P.A.
STRUCTURAL ENGINEERS
License No. C-3870
318 W Millbrook Rd. Unit 201
Raleigh, North Carolina 27609
Phone (919) 844-1661

NEW HOME INC.
STRUCTURAL ADDENDUM

REV #	REF PROJ #	DATE

SCOPE:
LOC: 42 DUNCANS CREEK

ENG: CMC/ZCH
DATE: 5/28/2025

GARNER CRAFTSMAN

PROJECT NO. 25-65-176

SHEET NO. S4

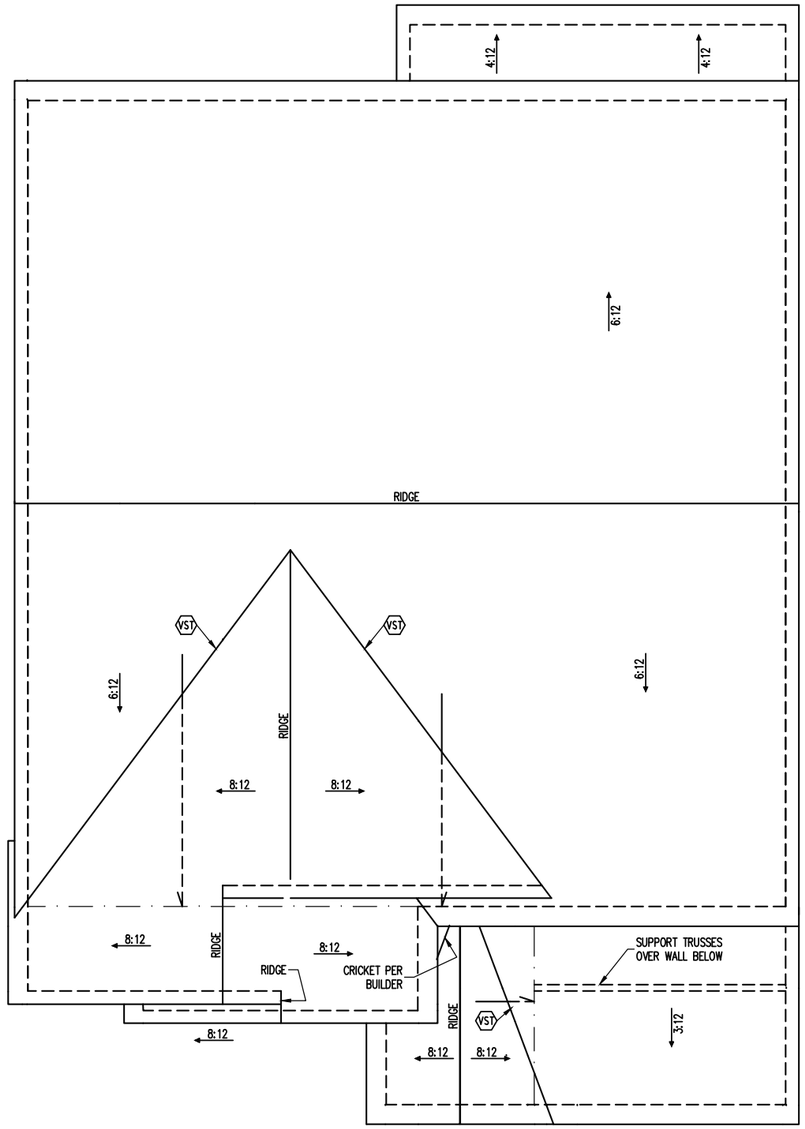

FRAMING SCHEDULE

ROOF ONLY

VST VALLEY SET TRUSSES PER MANU

FRAMING NOTES

ROOF ONLY

- ROOF TRUSSES PER MANU. TYPICAL U.N.O.
- VERIFY ALL HEEL HEIGHTS, ROOF PITCHES, AND ARCHITECTURAL OVERHANGS PRIOR TO CONSTRUCTION

TRUSS UPLIFT CONNECTORS

EXPOSURE B, 120 MPH, ANY PITCH

24" O.C. MAX ROOF TRUSS SPACING

TRUSSES SHALL BE ATTACHED TO SUPPORT WALL FOR UPLIFT RESISTANCE. CONTINUOUS OSB WALL SHEATHING BELOW PROVIDES CONTINUOUS UPLIFT RESISTANCE TO FOUNDATION. ALL TRUSSES SUPPORTED BY INTERMEDIATE SUPPORT WALLS, KNEEWALLS OR BEAMS SHALL BE ATTACHED TO SUPPORTING MEMBER PER SCHEDULE BELOW.

ROOF SPAN IS MEASURED HORIZONTALLY BETWEEN FURTHEST SUPPORT POINTS.

ROOF SPAN	CONNECTOR
UP TO 18'	NAILING PER TABLE 602.3(1) NCRBC 2018 EDITION
OVER 18'	(1) SIMPSON H2.5A HURRICANE CLIP TO DBL TOP PLATE OR BEAM

ROOF FRAMING PLAN

1/8" = 1'-0"

The structural design of this plan is the property of Engineering Tech Associates, P.A. These plans are for the one time use at the location and for the client listed. Engineering Tech Associates, P.A. assumes no liability for these plans if they are reproduced, in whole or in part, for construction at any other location without written permission from Engineering Tech Associates, P.A.

NORTH CAROLINA PROFESSIONAL ENGINEER SEAL 055544 CODY M. CHILLDRESS 05/28/2025

Engineering Tech ASSOCIATES, P.A.
STRUCTURAL ENGINEERS
License No. C-3870
318 W Millbrook Rd. Unit 201
Raleigh, North Carolina 27609
Phone (919) 844-1661

REV #	REF PROJ #	DATE

SCOPE: NEW HOME INC.
STRUCTURAL ADDENDUM

LOC: 42 DUNCANS CREEK

ENG: CMC/ZCH
DATE: 5/28/2025

GARNER
CRAFTSMAN

PROJECT NO.
25-65-176

SHEET NO.
S5

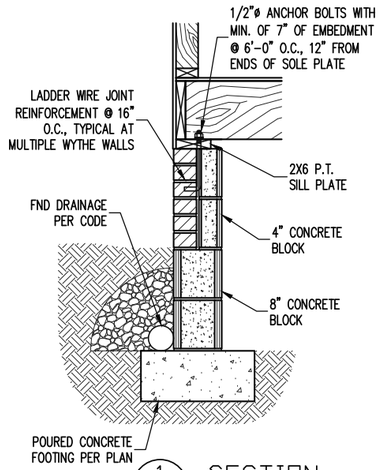

1 / S1 SECTION
TYPICAL FND WALL
1/2" = 1'-0"

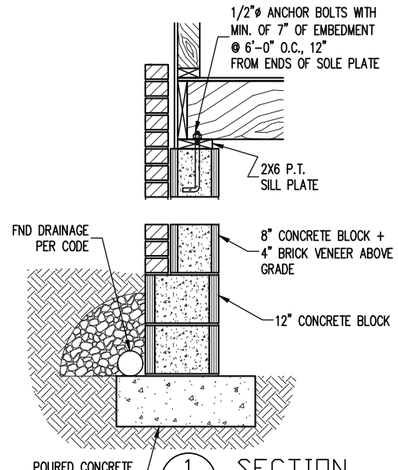

1 / S1 SECTION
TYPICAL FND WALL WITH BRICK VENEER
1/2" = 1'-0"

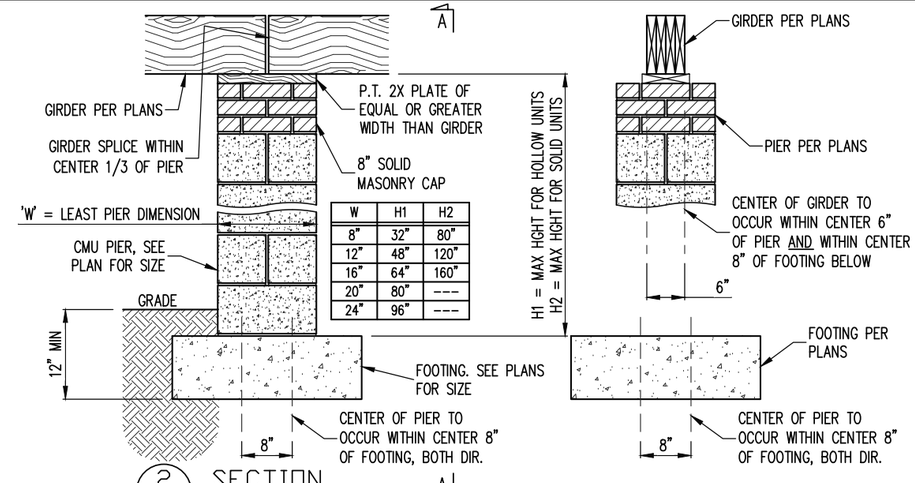

W	H1	H2
8"	32"	80"
12"	48"	120"
16"	64"	160"
20"	80"	---
24"	96"	---

2 / S1 SECTION
TYPICAL MASONRY PIER, GIRDER
1/2" = 1'-0"

SECTION A–A
1/2" = 1'-0"

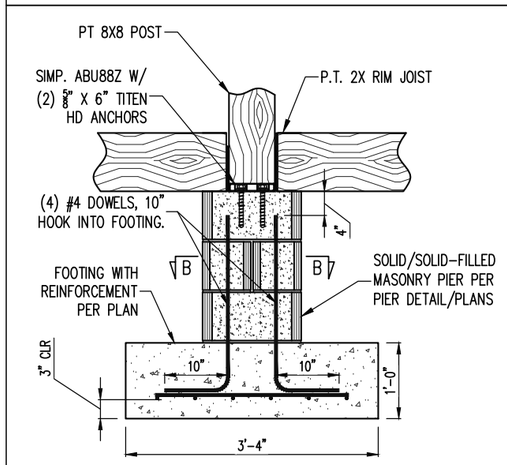

3 / S1 SECTION
MASONRY PIER @ DECK
1/2" = 1'-0"

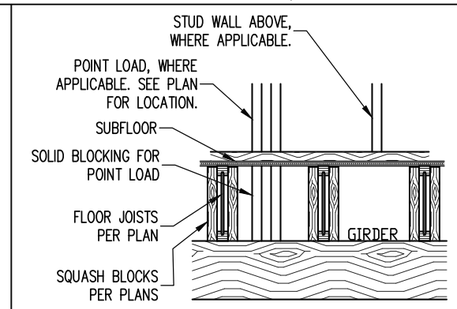

4 / S2 SECTION
TYPICAL DROPPED GIRDER
1/2" = 1'-0"

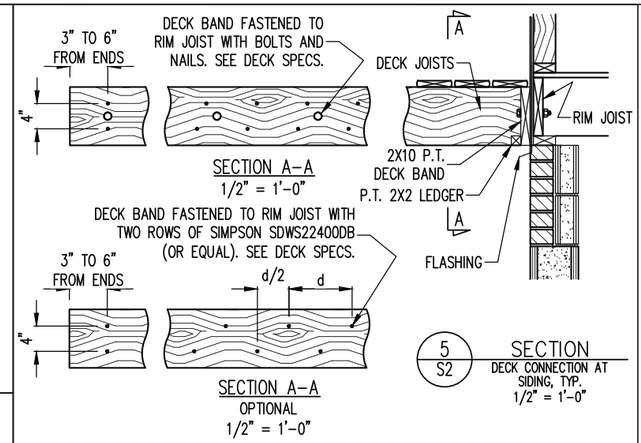

SECTION A–A
1/2" = 1'-0"

SECTION A–A
OPTIONAL
1/2" = 1'-0"

5 / S2 SECTION
DECK CONNECTION AT SIDING, TYP.
1/2" = 1'-0"

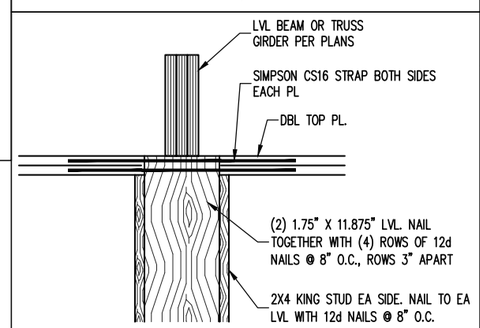

6 / S3 SECTION
LVL COLUMN
1/2" = 1'-0"

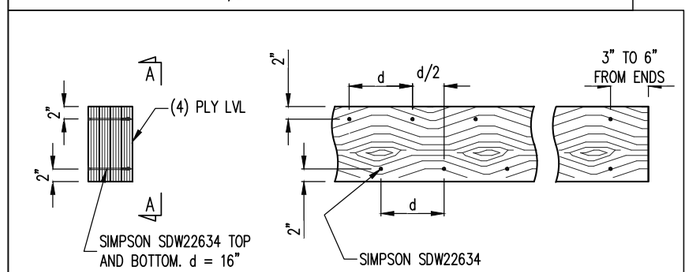

7 / S3 SECTION
TYPICAL FASTENING (4) PLY LVL
1/2" = 1'-0"

SECTION A–A
1/2" = 1'-0"

*BUILDER PERMITTED TO SUBSTITUTE 1/2"ø THROUGH BOLTS FOR SIMP. SDW SCREWS @ EQUAL SPACING.

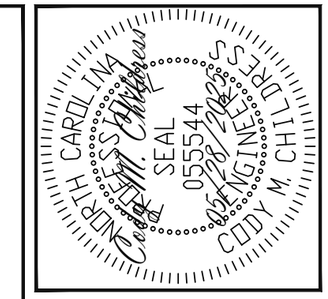

Engineering Tech ASSOCIATES, P.A.
STRUCTURAL ENGINEERS
License No. C-3870
318 W Millbrook Rd. Unit 201
Raleigh, North Carolina 27609
Phone (919) 844-1661

SCOPE: NEW HOME INC.
STRUCTURAL ADDENDUM
LOC: 42 DUNCANS CREEK

REV #	REF PROJ #	DATE

ENG: CMC/ZCH
DATE: 5/28/2025

GARNER CRAFTSMAN

PROJECT NO. 25-65-176

SHEET NO. SD1

The structural design of this plan is the property of Engineering Tech Associates, P.A. These plans are for the one time use at the location and for the client listed. Engineering Tech Associates, P.A. assumes no liability for these plans if they are reproduced, in whole or in part, for construction at any other location without written permission from Engineering Tech Associates, P.A.

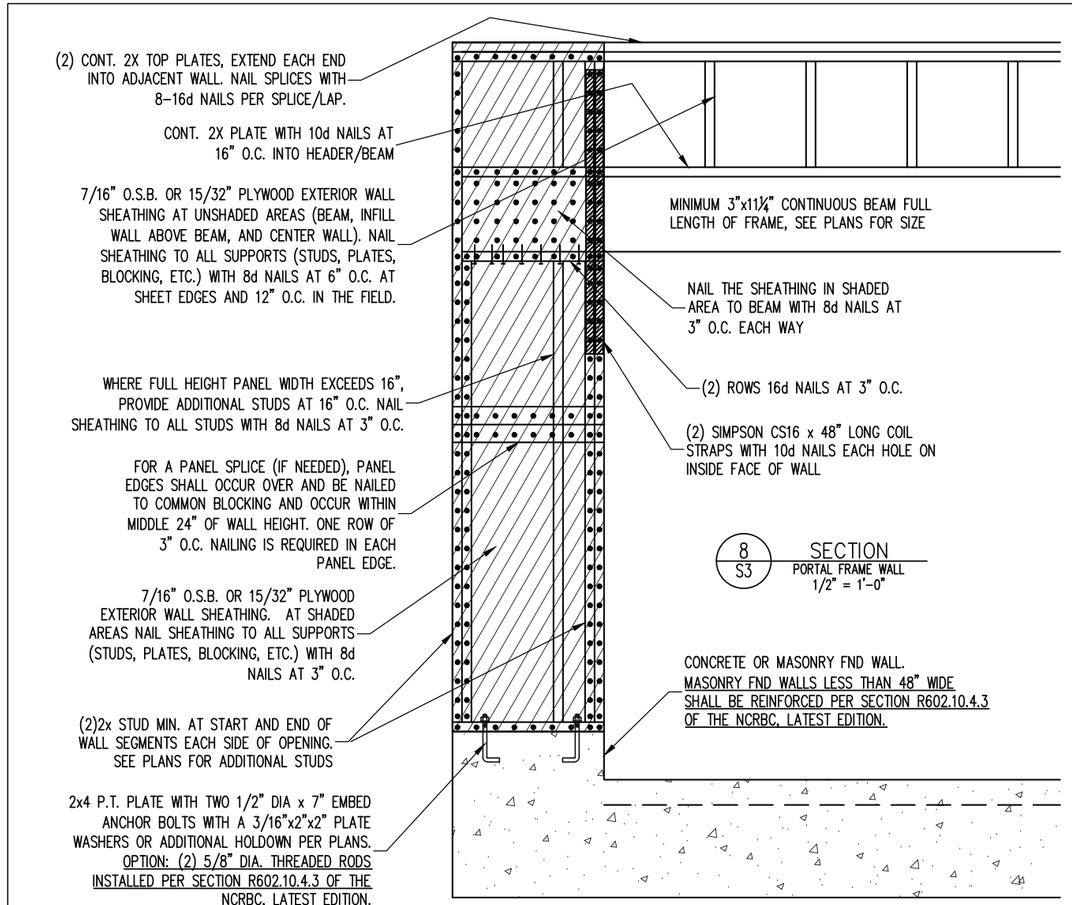

8 / S3 SECTION
PORTAL FRAME WALL
1/2" = 1'-0"

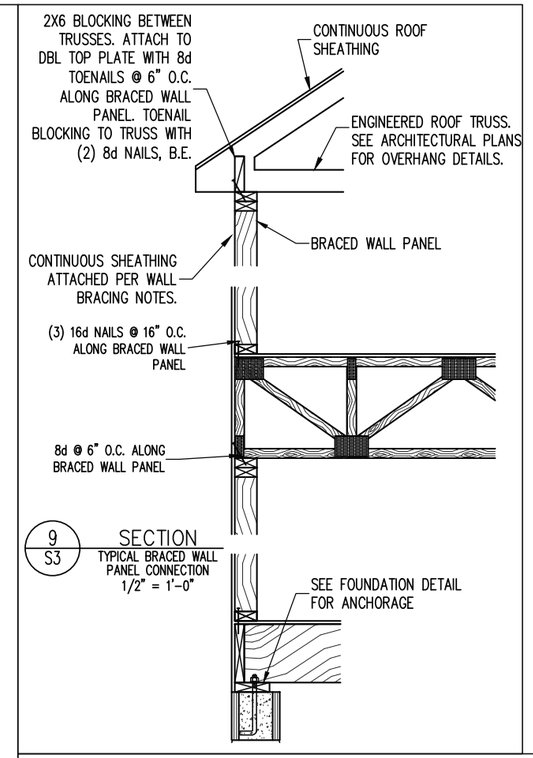

9 / S3 SECTION
TYPICAL BRACED WALL PANEL CONNECTION
1/2" = 1'-0"

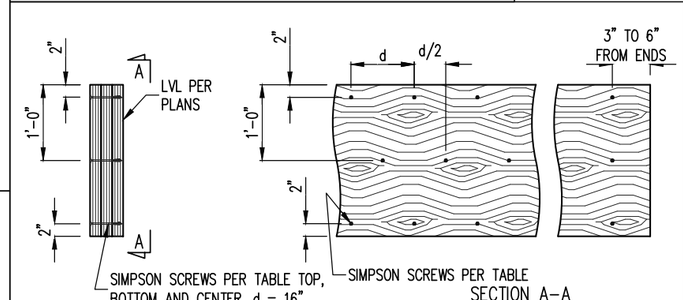

SECTION A-A
1/2" = 1'-0"

*BUILDER PERMITTED TO SUBSTITUTE ½"ø THROUGH BOLTS FOR SIMP. SDW SCREWS @ EQUAL SPACING.

SCREW MODEL # PER # OF LVL PLIES	
(2) PLY	SDW22338
(3) PLY	SDW22500
(4) PLY	SDW22634

12 / S3 SECTION
TYPICAL FASTENING OF MULTI-PLY 24" LVL
1/2" = 1'-0"

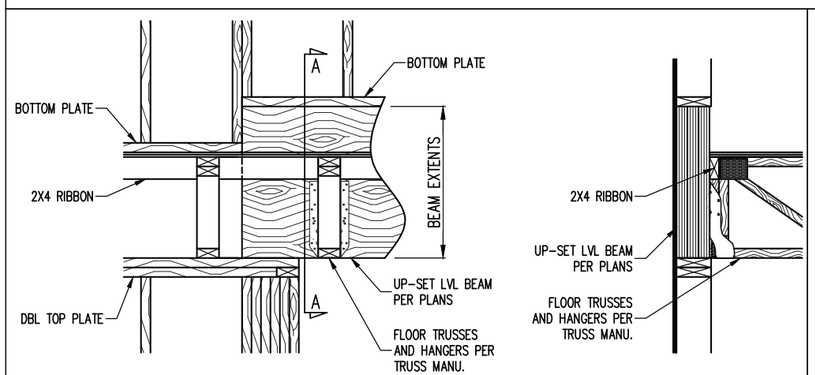

10 / S3 SECTION
UPSET LVL BEAM
1/2" = 1'-0"

SECTION A-A
1/2" = 1'-0"

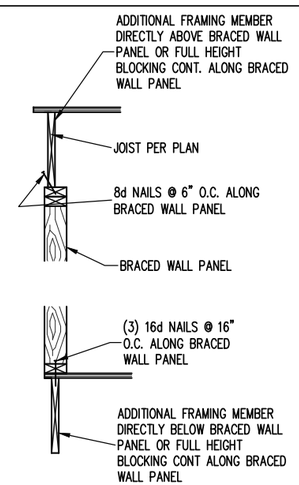

11 / S3 SECTION
TYPICAL BRACED WALL PANEL CONNECTION AT INTERIOR WALL, JOISTS PERPENDICULAR OR PARALLEL.
1/2" = 1'-0"

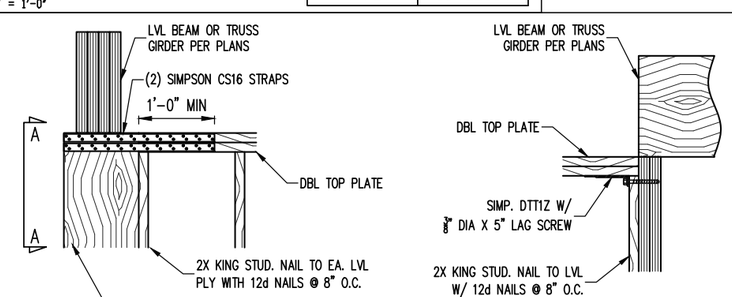

13 / S4 SECTION
LVL COLUMN @ CORNER
1/2" = 1'-0"

SECTION A-A
1/2" = 1'-0"

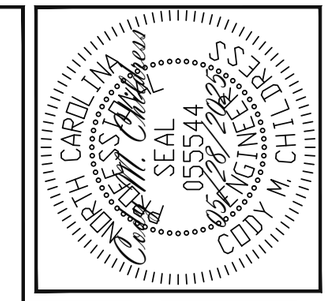

Engineering Tech ASSOCIATES, P.A.
STRUCTURAL ENGINEERS
License No. C-3870
318 W Millbrook Rd. Unit 201
Raleigh, North Carolina 27609
Phone (919) 844-1661

The structural design of this plan is the property of Engineering Tech Associates, P.A. These plans are for the one time use at the location and for the client listed. Engineering Tech Associates, P.A. assumes no liability for these plans if they are reproduced, in whole or in part, for construction at any other location without written permission from Engineering Tech Associates, P.A.

NEW HOME INC.
STRUCTURAL ADDENDUM
SCOPE:
LOC: 42 DUNCANS CREEK

REV #	REF PROJ #	DATE

ENG: CMC/ZCH
DATE: 5/28/2025

GARNER
CRAFTSMAN

PROJECT NO.
25-65-176

SHEET NO.
SD2

CONSTRUCTION SPECIFICATIONS

PART 1: GENERAL

1.01 CONSTRUCTION SHALL MEET THE REQUIREMENTS OF THE NORTH CAROLINA RESIDENTIAL CODE, 2018 EDITION.

1.02 DIMENSIONS SHOWN SHALL GOVERN OVER SCALE ON THESE DRAWINGS.

1.05 METHODS, PROCEDURES AND SEQUENCES OF CONSTRUCTION ARE THE RESPONSIBILITY OF THE CONTRACTOR, WHO SHALL TAKE ALL NECESSARY PRECAUTIONS TO MAINTAIN AND INSURE THE INTEGRITY OF THE STRUCTURE AT ALL STAGES OF CONSTRUCTION.

PART 2: DESIGN LOADS

2.01 DESIGN LOADS SHALL CONFORM WITH THE TABLE BELOW:

USE	LIVE LOAD (PSF)	DEAD LOAD (PSF)
BALCONIES, DECKS, ATTICS WITH FIXED STAIR ACCESS, DWELLING UNITS INCLUDING ATTICS WITH FIXED STAIR ACCESS, STAIRS, FIRE ESCAPES	40	10
GARAGES (PASSENGER CARS ONLY)	50	--
ATTICS (NO STORAGE, LESS THAN 5' HEADROOM)	10	10
ATTICS (WITH STORAGE)	20	10
ROOF	20	10 (15 FOR VAULTS)

NOTES: – INDIVIDUAL STAIR TREADS ARE TO BE DESIGNED FOR THE UNIFORMLY DISTRIBUTED LIVE LOAD OF 40 PSF OR A 300 LB. CONCENTRATED LOAD ACTING OVER AN AREA OF 4 SQ. WHICHEVER PRODUCES THE GREATER STRESS.
– BUILDER TO VERIFY DEAD LOAD DOES NOT EXCEED 10 PSF WHEN HEAVY FLOOR OR ROOF FINISHES SUCH AS TILE OR SLATE ARE UTILIZED. NOTIFY ENGINEERING UNDER THESE CONDITIONS

2.02 INTERIOR WALLS: 5 PSF LATERAL.

2.03 BASIC WIND DESIGN VELOCITY OF 120 MPH.

2.04 SOIL BEARING CAPACITY 2000 PSF (PRESUMPTIVE).

PART 3: STRUCTURAL STEEL

3.01 WIDE FLANGE BEAMS AND TEE SECTIONS SHALL CONFORM TO ASTM A992 MINIMUM GRADE

3.02 SQUARE AND RECTANGULAR TUBING SHALL CONFORM TO ASTM A500 GRADE B MINIMUM GRADE.

3.03 STEEL PIPE SHALL CONFORM TO ASTM A53 GRADE B, TYPE S, MINIMUM GRADE

3.04 ALL OTHER STRUCTURAL STEEL SHALL CONFORM TO ASTM A36 MINIMUM GRADE

3.05 STRUCTURAL STEEL CONSTRUCTION SHALL MEET THE REQUIREMENTS OF THE AISC SPECIFICATION FOR THE DESIGN, FABRICATION AND ERECTION OF STRUCTURAL STEEL FOR BUILDINGS.

PART 4: WELDING

4.01 WELDING ELECTRODES SHALL BE E70XX AND ALL WELDING SHALL BE PERFORMED BY AN AWS CERTIFIED WELDER

PART 5: CONCRETE AND SLABS ON GRADE

5.01 CAST IN PLACE CONCRETE SHALL BE OF NORMAL WEIGHT, 4–6% AIR ENTRAINMENT, FOR EXTERIOR CONCRETE AND SHALL HAVE A MINIMUM COMPRESSIVE STRENGTH OF 3000 PSI AT 28 DAYS TYP UNO. ALL ITEMS NOTED AS 'CONCRETE' ARE TO BE CAST IN PLACE, TYP UNO.

5.02 REINFORCED CAST IN PLACE CONCRETE SHALL BE PROPORTIONED, MIXED AND PLACED IN ACCORDANCE WITH THE SPECIFICATIONS OF ACI 318, LATEST EDITION.

5.03 SLABS ON GRADE, IF ANY, SHALL BE CAST IN PLACE, CONTAIN SYNTHETIC POLYPROPYLENE FIBRILLATED MICRO FIBERS, FIBER LENGTH 1 1/2", DOSAGE RATE 1 1/2 LBS/CU YD. SLAB TO BE PLACED ON A 6 MIL VAPOR BARRIER ON 4" MIN GRANULAR FILL ON SOIL WITH 90% MIN STANDARD PROCTOR DENSITY. VAPOR BARRIER MAY BE OMITTED FOR SLABS NOT IN ENCLOSED AREAS

PART 6: REBAR AND WIRE REINFORCEMENT

6.01 REBAR SHALL BE DEFORMED STEEL CONFORMING TO ASTM A615 GRADE 60 TYP UNO

6.02 LAP SPLICES SHALL BE CLASS B AS DEFINED BY ACI 318, TYP UNO. STAGGER ADJACENT SPLICES A MINIMUM OF ONE LAP LENGTH

6.03 WIRE REINFORCEMENT SHALL BE 9 GA AND SHALL CONFORM TO ASTM A1064.

PART 7: MASONRY

7.01 CONCRETE MASONRY UNITS SHALL CONFORM TO ASTM C90 AND C55, NORMAL WEIGHT, f'M = 1,500 PSI MIN

7.02 CLAY MASONRY UNITS SHALL CONFORM TO ASTM C62–17 GRADE SW

7.03 MORTAR SHALL BE TYPE S. MORTAR AND GROUT SHALL CONFORM TO ASTM C476, MIN COMPRESSIVE STRENGTH OF 2000 PSI.

7.04 MASONRY CONSTRUCTION SHALL CONFORM TO THE SPECIFICATIONS OF ACI 530

7.05 LADDER WIRE REINFORCEMENT SHALL CONFORM TO ASTM A951. 6" MIN LAPS FOR CONTINUOUS WALL APPLICATIONS

PART 8: BOLTS AND LAG SCREWS

8.01 BOLTS SHALL CONFORM TO ASTM A307 MINIMUM GRADE TYP UNO. INSTALL USS STEEL WASHERS (ASTM F844–07a) FOR THE NUT / BOLT HEAD WHEN BOLTING WOOD MEMBERS. HOLES FOR BOLTS SHALL BE AISC STANDARD HOLES UNO

8.02 LAG SCREWS SHALL CONFORM TO ANSI/ASME STANDARD B18.2.1–1981. PILOT HOLES SHALL BE USED FOR LAG SCREW INSTALLATION AND SHALL BE BORED ACCORDING TO NDS SPECIFICATIONS. INSTALL STANDARD STEEL WASHERS (ASTM F844–07a) FOR SCREW HEAD

8.03 ANCHOR RODS AND BOLTS SHALL CONFORM TO ASTM F1554–15 GRADE 36 UNO. BENT ANCHOR BOLTS SHALL HAVE A 2" MIN HOOK UNO

PART 9: DRIVEN FASTENERS

9.01 NAILS, SPIKES AND STAPLES SHALL CONFORM TO ASTM F 1667– 05. NAILS ARE TO BE COMMON WIRE OR BOX

PART 10: DIMENSIONAL LUMBER

10.01 SOLID SAWN WOOD FRAMING DESIGN IS BASED ON NO. 2 SPRUCE PINE FIR OR SYP #2 FOR JOISTS, RAFTERS, GIRDERS, BEAMS, STUDS, ETC. MINIMUM ALLOWABLE DESIGN PROPERTIES ARE AS FOLLOWS:
$E = 1{,}400{,}000$ PSI, F_c perp = 425 PSI, $F_v = 135$ PSI, SPECIFIC GRAVITY = 0.42 MIN
$F_b = 875$ PSI FOR 2X4, 2X6, 2X8. $F_b = 800$ PSI FOR 2X10'S, 750 PSI FOR 2X12'S

PART 11: ENGINEERED LUMBER

11.01 LVL OR PSL MINIMUM ALLOWABLE DESIGN PROPERTIES ARE AS FOLLOWS:
$E = 1{,}900{,}000$ PSI, $F_b = 2600$ PSI, $F_v = 285$ PSI, F_c perp = 750 PSI
LSL MINIMUM ALLOWABLE DESIGN STRESSES ARE AS FOLLOWS:
$E = 1.3 \times 10E6$ PSI, $F_b = 1700$ PSI, $F_v = 400$ PSI, F_c perp = 680 PSI

11.02 LVL OR PSL MEMBERS MAY BE RIPPED FROM DEEPER MEMBERS TO MATCH THE MEMBER DEPTH SPECIFIED IN THE PLANS. MAY SUBSTITUTE PSL AND LVL FOR EACH OTHER UNO

PART 12: PRESSURE TREATED LUMBER

12.01 LUMBER IN CONTACT WITH THE GROUND, CONCRETE OR MASONRY SHALL BE PRESSURE TREATED IN ACCORDANCE WITH AWPA STANDARD C–15. ALL OTHER EXPOSED LUMBER SHALL BE TREATED IN ACCORDANCE WITH AWPA STANDARD C–2 OR BY ANY METHOD GIVING EQUAL PROTECTION. THE BUILDING CODE OFFICE MAY ALSO APPROVE A NATURAL DECAY RESISTANT WOOD PER SECTION 19–6(A)

PART 13: STEEL FLITCH PLATE BEAMS

13.01 FLITCH PLATE BEAMS SHALL CONSIST OF A CONTINUOUS STEEL PLATE BOLTED BETWEEN TWO PIECES OF CONTINUOUS LUMBER AS SIZED ON THE PLANS. BOLT PIECES TOGETHER USING 1/2" ø BOLTS SPACED AT 16" O.C. STAGGERED TOP TO BOTTOM OF THE BEAM. MAINTAIN A 2" EDGE DISTANCE. PLACE TWO BOLTS, ONE ABOVE THE OTHER, 16" MAX FROM EACH END OF THE BEAM. TYP UNO

PART 14: STUD SUPPORTS FOR BEAMS

14.01 STEEL, ENGINEERED LUMBER, AND FLITCH PLATE BEAMS BEARING ON A STUD WALL SHALL BEAR AS FOLLOWS:

1–WHEN THE BEAM IS PERPENDICULAR TO, OR SKEWED RELATIVE TO THE WALL, THE BEAM SHALL BEAR FULL WIDTH ON THE SUPPORTING WALL INDICATED AND SHALL BE SUPPORTED BY A MINIMUM OF THREE GANGED STUDS, OR A GANGED STUD COLUMN WITH A NUMBER OF STUDS SUCH THAT THE STUD COLUMN IS AT LEAST AS WIDE AS THE TRUE WIDTH OF THE BEAM BEING SUPPORTED, WHICHEVER IS GREATER, TYP UNO. FOR THE SKEWED CONDITION PARTICULAR CARE SHALL BE TAKEN TO ENSURE STUD COLUMN IS CENTERED ON THE BEAM
2–BEAMS BEARING ONTO THE END OF A STUD WALL PARALLEL TO THE BEAM SHALL BEAR A MINIMUM OF 4 1/2" ONTO THE WALL AND BE SUPPORTED BY A TRPL STUD GANGED COLUMN TYP UNO.

14.02 DIMENSIONAL LUMBER BEAMS BEARING ON A STUD WALL SHALL BEAR AS FOLLOWS:

1–WHEN THE BEAM IS PERPENDICULAR TO, OR SKEWED RELATIVE TO THE WALL, THE BEAM SHALL BEAR FULL WIDTH ON THE SUPPORTING WALL INDICATED (LESS 1 1/2" TO ALLOW FOR A CONTINUOUS RIM JOIST WHERE APPLICABLE) AND SHALL BE SUPPORTED BY A GANGED STUD COLUMN THE SAME WIDTH AS THE BEAM TYP UNO. (E.G. A TRIPLE 2X10 IS TO BE SUPPORTED BY (3) STUDS). FOR THE SKEWED CONDITION PARTICULAR CARE SHALL BE TAKEN TO ENSURE STUD COLUMN IS CENTERED ON THE BEAM
2–BEAMS BEARING ONTO THE END OF A STUD WALL PARALLEL TO THE BEAM SHALL BEAR A MINIMUM OF 3" ONTO THE WALL AND BE SUPPORTED BY A DBL STUD GANGED COLUMN TYP UNO.

14.03 EXTRA JOISTS BEARING ON A STUD WALL PERPENDICULAR TO OR SKEWED RELATIVE TO THE BEAM SHALL BE SUPPORTED BY ONE ADDITIONAL STUD.

14.04 STUDS THAT ARE GANGED TO FORM A COLUMN SHALL HAVE ADJACENT STUDS WITHIN THE COLUMN NAILED TOGETHER WITH ONE ROW OF 10d NAILS AT 8" O.C. (TWO ROWS OF 10d NAILS @ 8" O.C., 3" APART, FOR 2X8 OR 2X10 STUDS) ALL COLUMNS SHALL BE CONTINUOUS DOWN TO THE FOUNDATION OR OTHER PROPERLY DESIGNED STRUCTURAL ELEMENT SUCH AS A BEAM. COLUMNS TRANSFERRING LOADS THROUGH FLOOR LEVELS SHALL BE SOLIDLY BLOCKED FOR THE FULL WIDTH OF THE STUD COLUMN WITHIN THE CAVITY FORMED BY THE FLOOR JOISTS.

PART 15: NAILING OF MULTI PLY WOOD BEAMS

15.01 SOLID SAWN LUMBER JOISTS THAT ARE GANGED TO FORM A BEAM SHALL HAVE ADJACENT MEMBERS IN THE BEAM NAILED TOGETHER WITH THREE ROWS OF 10d NAILS @ 16" O.C. FOR 2X10 OR LARGER, TWO ROWS OF 10d NAILS @ 16" O.C. FOR 2X8, ONE ROW OF 10d NAILS @ 16" O.C. FOR 2X6 OR SMALLER. STAGGER ROWS 5" MIN.

15.02 LVL MEMBERS THAT ARE GANGED TO FORM A BEAM SHALL HAVE ADJACENT MEMBERS IN THE BEAM FASTENED TOGETHER PER MANUFACTURERS RECOMMENDATIONS, TYP UNO

PART 16: WALL FRAMING AND BRACING

16.01 STUD WALLS SHALL CONSIST OF 2X4 STUDS SPACED AT 16" O.C. UNO. STUDS SHALL BE CONTINUOUS FROM SOLE PLATE AT FLOOR TO DOUBLE TOP PLATE AT THE CEILING OR ROOF. NO INTERMEDIATE BANDS OR PLATES SHALL CAUSE DISCONTINUITIES IN A STUD WALL EXCEPT AS REQUIRED FOR DOOR OR WINDOW OPENINGS. THE KING STUDS FOR SUCH OPENINGS SHALL BE CONTINUOUS, TYP UNO.
MAX ALLOWABLE WALL HEIGHTS FOR EXTERIOR STUD WALLS, INCLUSIVE OF SOLE PLATE AND DBL TOP PLATE AND 7/16" OSB EXTERIOR BRACING AND ROW OF 2X4 2X6 PURLINS AT 8' HEIGHT (AND AT 16' HEIGHT FOR TALL WALLS), TYP UNO:
2X4 @ 16" O.C.: 11'–1 1/2" 2X6 @ 16" O.C.: 17'–0"
2X4 @ 12" O.C.: 12'–1 1/2" 2X6 @ 12" O.C.: 18'–8"
DBL 2X4 @ 16" O.C.: 13'–4" DBL 2X6 @ 16" O.C.: 21'–0"

16.02 FOR WALL BRACING THE FOLLOWING SHALL APPLY:
–BLOCKING AT UNSUPPORTED PANEL EDGES IS REQUIRED TYP UNO.
–WALL BRACING IS BY ENGINEERED DESIGN AND NOT PRESCRIPTIVE PER SECTION 602.10 OF THE 2018 NCRC. CONTINUOUS SHEATHING HAS BEEN PROVIDED, ALONG WITH ALTERNATIVE METHODS TO INSURE THE MINIMUM INTENT OF SECTION 602.10 OF THE 2018 NCRC HAS BEEN MET AND EXCEEDED.
–BRACED WALL PANELS SHALL BE FASTENED IN ACCORDANCE WITH TABLE 602.3(1) TO PROVIDE CONTINUOUS PANEL UPLIFT RESISTANCE AND COMPLIANCE WITH NCRSC R602.3.5 AND R802.11 UNLESS NOTED OTHERWISE ON STRUCTURAL PLANS.
–MAY SUBSTITUTE WSP FOR GB
–SINGLE JOIST, CONTINUOUS RIM JOIST, OR BLOCKING OF EQUAL DEPTH IS REQUIRED ABOVE AND BELOW ALL BRACED WALLS. NAIL BLOCKING ABOVE WALL TO TOP PLATE WITH 16d TOE NAILS @ 6" O.C. NAIL SOLE PLATE OF BRACED WALL TO BLOCKING BELOW WITH (3) 16d NAILS @ 16" O.C. BLOCKING AT HORIZONTAL JOINTS IN BRACED WALL LINES ONLY REQUIRED AT SHADED WALLS, UNO.

PART 17: KING STUDS

17.01 KING STUDS FOR OPENINGS IN EXTERIOR WALLS SHALL BE AS FOLLOWS:

		NUMBER OF KING STUDS				
MAX OPENING WIDTH		5'–0"	9'–0"	13'–0"	17'–0"	21'–0"
STUD SIZE	2X4	1	2	3	4	5
	2X6	1	1	2	2	2
	2X8	1	1	1	1	2

PART 18: SUBSTITUTIONS

18.01 MATERIAL OR MEMBER SIZE SUBSTITUTIONS OR PLAN DEVIATIONS REQUIRE THE WRITTEN AUTHORIZATION OF THE DESIGNERS. UNAUTHORIZED DEVIATIONS ARE THE SOLE RESPONSIBILITY OF THE CONTRACTOR.

PART 19: OWNERSHIP OF STRUCTURAL DESIGN

19.01 THE STRUCTURAL DESIGN OF THIS PLAN IS THE PROPERTY OF ENGINEERING TECH ASSOCIATES (ETA). THESE PLANS ARE FOR THE ONE TIME USE AT THE LOCATION INDICATED AND FOR THE CLIENT LISTED. ETA ASSUMES NO LIABILITY FOR THESE PLANS IF THEY ARE REPRODUCED, IN WHOLE OR IN PART, FOR CONSTRUCTION AT ANY OTHER LOCATION WITHOUT WRITTEN PERMISSION FROM ETA

DECK SPECIFICATIONS

1. A DECK IS AN EXPOSED EXTERIOR WOOD FLOOR STRUCTURE WHICH MAY BE ATTACHED TO A STRUCTURE OR BE FREE STANDING. ROOFED PORCHES, OPEN OR SCREENED IN, MAY BE CONSTRUCTED USING THESE PROVISIONS.

2. SUPPORT POSTS SHALL BE SUPPORTED BY A FOOTING.

3. WHEN ATTACHED TO A STRUCTURE, THE STRUCTURE TO WHICH ATTACHED SHALL HAVE A TREATED WOOD BAND FOR THE LENGTH OF THE DECK, OR CORROSION RESISTANT FLASHING SHALL BE USED TO PREVENT MOISTURE FROM COMING IN CONTACT WITH THE UNTREATED FRAMING OF THE STRUCTURE. THE DECK BAND AND THE STRUCTURE BAND SHALL BE CONSTRUCTED IN CONTACT WITH EACH OTHER EXCEPT AT BRICK VENEER AND WHERE PLYWOOD SHEATHING IS REQUIRED AND PROPERLY FLASHED. SIDING SHALL NOT BE INSTALLED BETWEEN THE STRUCTURE AND THE DECK BAND. IF ATTACHED TO A BRICK STRUCTURE, NEITHER FLASHING NOR A TREATED BAND FOR THE BRICK STRUCTURE IS REQUIRED. IN ADDITION, THE TREATED DECK BAND SHALL BE CONSTRUCTED IN CONTACT WITH THE BRICK

4. WHEN THE DECK IS SUPPORTED AT THE STRUCTURE BY ATTACHING THE DECK TO THE STRUCTURE, THE FOLLOWING ATTACHMENT SCHEDULES SHALL APPLY FOR ATTACHING THE DECK BAND TO THE STRUCTURE:

A. ALL STRUCTURES EXCEPT BRICK STRUCTURES

	JOIST LENGTH	
	UP TO 8' MAX.	UP TO 16' MAX.
REQUIRED FASTENERS	ONE– 5/8" ø BOLT @ 42" O.C. AND (2) ROWS OF 12d NAILS @ 8" O.C. OR TWO ROWS OF SIMPSON SDWS22400DB @ d = 32" O.C. STAGGERED	ONE– 5/8" ø BOLT @ 20" O.C. AND (3) ROWS OF 12d NAILS @ 6" O.C. OR TWO ROWS OF SIMPSON SDWS22400DB @ d = 16" O.C. STAGGERED

A . BRICK VENEER STRUCTURES

	JOIST LENGTH	
	UP TO 8' MAX.	UP TO 16' MAX.
REQUIRED FASTENERS	ONE– 5/8" ø BOLT @ 28" O.C.	ONE– 5/8" ø BOLT @ 16" O.C.

5. IF THE DECK BAND IS SUPPORTED BY A 1/2" MINIMUM MASONRY LEDGE ALONG THE FOUNDATION WALL, 5/8" ø BOLTS SPACED @ 48" O.C. MAY BE USED FOR SUPPORT.

6. OTHER MEANS OF SUPPORT, SUCH AS JOIST HANGERS, MAY BE USED TO CONNECT DECK JOISTS TO A TREATED STRUCTURE BAND

7. GIRDERS SHALL BEAR DIRECTLY ON POSTS OR BE BE CONNECTED TO THE SIDES OF POSTS WITH 2– 5/8" ø BOLTS

8. FLOOR DECKING SHALL BE NO. 2 GRADE TREATED SOUTHERN PINE OR EQUIVALENT. THE MINIMUM FLOOR DECKING THICKNESS SHALL BE AS FOLLOWS:

JOIST SPAN	DECKING
12" O.C.	1" S4S
16" O.C.	1" T&G
24" O.C.	1 1/4" S4S
32" O.C.	2" S4S

9. MAXIMUM HEIGHT OF DECK SUPPORT POSTS IS AS FOLLOWS:

POST SIZE	MAX POST HEIGHT
4X4	8'
6X6	20'
ENGINEERED	20' +

NOTES: 1) THIS TABLE IS BASED ON NO. 2 TREATED SOUTHERN PINE POSTS.
2) THIS TABLE IS BASED ON A MAXIMUM TRIBUTARY AREA OF 128 SQ. FT.
3) POST HEIGHT IS FROM TOP OF FOOTING TO BOTTOM OF GIRDER.

10. DECKS SHALL BE BRACED TO PROVIDE LATERAL STABILITY BY ONE OF THE FOLLOWING METHODS:

A. WHEN THE DECK FLOOR HEIGHT IS LESS THAN 4'–0" AND THE DECK IS ATTACHED TO THE STRUCTURE IN ACCORDANCE WITH SECTION 4, LATERAL BRACING IS NOT REQUIRED.

B. 4X4 WOOD KNEE BRACES MAY BE PROVIDED ON EACH COLUMN IN BOTH DIRECTIONS. THE KNEE BRACES SHALL ATTACH TO EACH POST AT A POINT NOT LESS THAN 1/3 OF THE POST LENGTH FROM THE TOP OF THE POST, AND THE BRACES SHALL BE ANGLED BETWEEN 45° AND 60° FROM THE HORIZONTAL. KNEE BRACES SHALL BE ATTACHED AT THE ENDS TO THE GIRDER AND THE POST WITH ONE – 5/8"ø BOLT

C. FOR FREE STANDING DECKS WITHOUT KNEE BRACES OR DIAGONAL BRACING, LATERAL STABILITY MAY BE PROVIDED BY EMBEDDING THE POSTS IN CONCRETE IN ACCORDANCE WITH THE FOLLOWING:

POST SIZE	TRIBUT. AREA	POST HEIGHT	EMB. DEPTH	CONC. DIAM.
4X4	48 SQ. FT.	4'–0"	2'–6"	1'–0"
6X6	120 SQ. FT.	6'–0"	3'–6"	1'–8"

D. 2X6 DIAGONAL VERTICAL CROSS BRACING SHALL BE PROVIDED IN TWO PERPENDICULAR DIRECTIONS FOR FREE STANDING DECKS OR PARALLEL TO THE STRUCTURE AT THE EXTERIOR COLUMN LINE FOR ATTACHED DECKS. THE BRACES SHALL BE ATTACHED TO THE POSTS WITH ONE – 5/8" ø BOLT AT EACH END OF THE BRACE.

NOTES: 1) ALL NAILS AND BOLTS ARE TO BE HOT DIPPED GALVANIZED.
2) MINIMUM EDGE DISTANCE FOR BOLTS IS 2 1/2".
3) NAILS MUST PENETRATE THE SUPPORTING STRUCTURE BAND A MINIMUM OF 1 1/2".

ABBREVIATIONS

ABV	ABOVE	FND	FOUNDATION	TJ	TRIPLE JOIST
B.	BOTH	FTG	FOOTING	TYP	TYPICAL
B.E.	BOTH ENDS	HDG	HOT DIPPED GALVANIZED	TRPL	TRIPLE
BTWN	BETWEEN	HGR	HANGER	TSP	TRIPLE STUD POCKET
CIP	CAST IN PLACE	LVL	LAMINATED VENEER LUMBER	UNO	UNLESS NOTED OTHERWISE
CONC	CONCRETE	NTS	NOT TO SCALE	XJ	EXTRA JOIST
CS	CONTINUOUS SHEATHING	O.C.	ON CENTER		
DIA	DIAMETER	PSL	PARALLEL STRAND LUMBER		
DBL	DOUBLE	PT	PRESSURE TREATED		
DJ	DOUBLE JOIST	QJ	QUAD JOIST		
DSP	DBL STUD POCKET	SP	SPACE (OR SPACING)		
EQ	EQUAL	SSP	SINGLE STUD POCKET		
EA	EACH	SQ	SQUARE		
FLG	FLANGE				
FL PL	FLITCH PLATE				
FLR	FLOOR				

NOTES

THE BUILDER IS RESPONSIBLE FOR REVIEWING PLANS PRIOR TO CONSTRUCTION. THE BUILDER SHALL IMMEDIATELY CONTACT THE ENGINEER OF RECORD (EOR) BEFORE PROCEEDING IF THE FOLLOWING CONDITIONS ARE NOTED BEFORE OR DURING CONSTRUCTION:
1) THE WORKING PLANS DO NOT BEAR THE SEAL OF THE EOR
2) THE PLANS CONTAIN DISCREPANT OR INCOMPLETE INFORMATION

ANY ERRORS DUE TO A FAILURE TO FOLLOW THE ABOVE PROCEDURES SHALL NOT BE THE RESPONSIBILITY OF THE EOR. FURTHERMORE, IT IS THE RESPONSIBILITY OF THE BUILDER TO ENSURE THAN ANY REVISIONS ISSUED BY THE EOR ARE PROMPLY DISTRIBUTED TO THE SUBCONTRACTORS

THE EOR DOES NOT PERFORM FENESTRATION OR VENTING CALCULATIONS OR ANY OTHER CALCULATIONS THAT ARE NOT DIRECTLY RELATED TO STRUCTURAL ENGINEERING.

ROOF AND FLOOR TRUSSES TO BE DESIGNED BY AN ENGINEER REGISTERED BY THE STATE. FINAL TRUSS DRAWING SHOULD BE SUBMITTED TO THE EOR FOR REVIEW

ALLOWABLE I-JOIST SUBSTITUTION

NOTE: MAINTAIN JOIST DEPTH, DIRECTION, AND SPACING SPECIFIED ON PLANS.

MANUFACTURER	DEPTH	SERIES	SIMPSON FACE MOUNT HGR	SIMPSON TOP FLANGE HGR
BLUELINX	11.875"	BLI 40	IUS2.56/11.88	ITS2.56/11.88
BOISE CASCADE	11.875"	BCI 5000s	IUS2.06/11.88	ITS2.06/11.88
BOISE CASCADE	11.875"	BCI 6000s	IUS2.37/11.88	ITS2.37/11.88
INTERNATIONAL BEAMS	11.875"	IB 400	IUS2.56/11.88	ITS2.56/11.88
LP CORP	11.875"	LPI 20+	IUS2.56/11.88	ITS2.56/11.88
NORDIC	11.875"	NI 40X	IUS2.56/11.88	ITS2.56/11.88
ROSEBURG	11.875"	RFPI 40s	IUS2.56/11.88	ITS2.56/11.88
WEYERHAEUSER	11.875"	TJI 210	IUS2.06/11.88	ITS2.06/11.88
WEYERHAEUSER	11.875"	EEI–20	IUS2.37/11.88	ITS2.37/11.88

JOISTS NOT LISTED IN THE ABOVE TABLE MAY BE USED PROVIDED THEY MEET OR EXCEED THE PROPERTIES OF THOSE LISTED. SUBSTITUTE USP BRAND HANGERS WITH EQUIVALENT VALUES AS DESIRED.

NORTH CAROLINA PROFESSIONAL ENGINEER SEAL 055544 05/28/2025 CODY M. CHILDERS

Engineering Tech Associates
STRUCTURAL ENGINEERS
License No. C-3870
318 W Millbrook Rd. Unit 201
Raleigh, North Carolina 27609
Phone (919) 844-1661

The structural design of this plan is the property of Engineering Tech Associates, P.A. These plans are for the one time use at the location and for the client listed. Engineering Tech Associates, P.A. assumes no liability for these plans if they are reproduced, in whole or in part, for construction at any other location without written permission from Engineering Tech Associates, P.A.

NEW HOME INC.
STRUCTURAL ADDENDUM
SCOPE:
LOC: 42 DUNCANS CREEK

REV #	REF PROJ #	DATE

ENG: CMC/ZCH
DATE: 5/28/2025

GARNER
CRAFTSMAN

PROJECT NO.
25-65-176

SHEET NO.
SPECS
8 of 8