ENGINEERING BY TRENCO
A MiTek Affiliate

Trenco
818 Soundside Rd
Edenton, NC 27932

Re: 25060033-01
926 Serenity-Roof-329 A CP GLH

The truss drawing(s) referenced below have been prepared by Truss Engineering Co. under my direct supervision based on the parameters provided by Carter Components (Sanford, NC)).

Pages or sheets covered by this seal: I74200562 thru I74200623

My license renewal date for the state of North Carolina is December 31, 2025.

North Carolina COA: C-0844

NORTH CAROLINA PROFESSIONAL SEAL 036322 ENGINEER ERIC A. GILBERT

June 16,2025

Gilbert, Eric

IMPORTANT NOTE: The seal on these truss component designs is a certification that the engineer named is licensed in the jurisdiction(s) identified and that the designs comply with ANSI/TPI 1. These designs are based upon parameters shown (e.g., loads, supports, dimensions, shapes and design codes), which were given to MiTek or TRENCO. Any project specific information included is for MiTek's or TRENCO's customers file reference purpose only, and was not taken into account in the preparation of these designs. MiTek or TRENCO has not independently verified the applicability of the design parameters or the designs for any particular building. Before use, the building designer should verify applicability of design parameters and properly incorporate these designs into the overall building design per ANSI/TPI 1, Chapter 2.

Job	Truss	Truss Type	Qty	Ply	926 Serenity-Roof-329 A CP GLH
25060033-01	A01	Flat	1	1	I74200562 Job Reference (optional)

Carter Components (Sanford, NC), Sanford, NC - 27332,

Run: 8.73 S Feb 19 2025 Print: 8.730 S Feb 19 2025 MiTek Industries, Inc. Fri Jun 13 10:53:26 Page: 1
ID:C?sBVu?G6imTJZQMRH739iyiJlv-RfC?PsB70Hq3NSgPqnL8w3uITXbGKWrCDoi7J4zJC?f

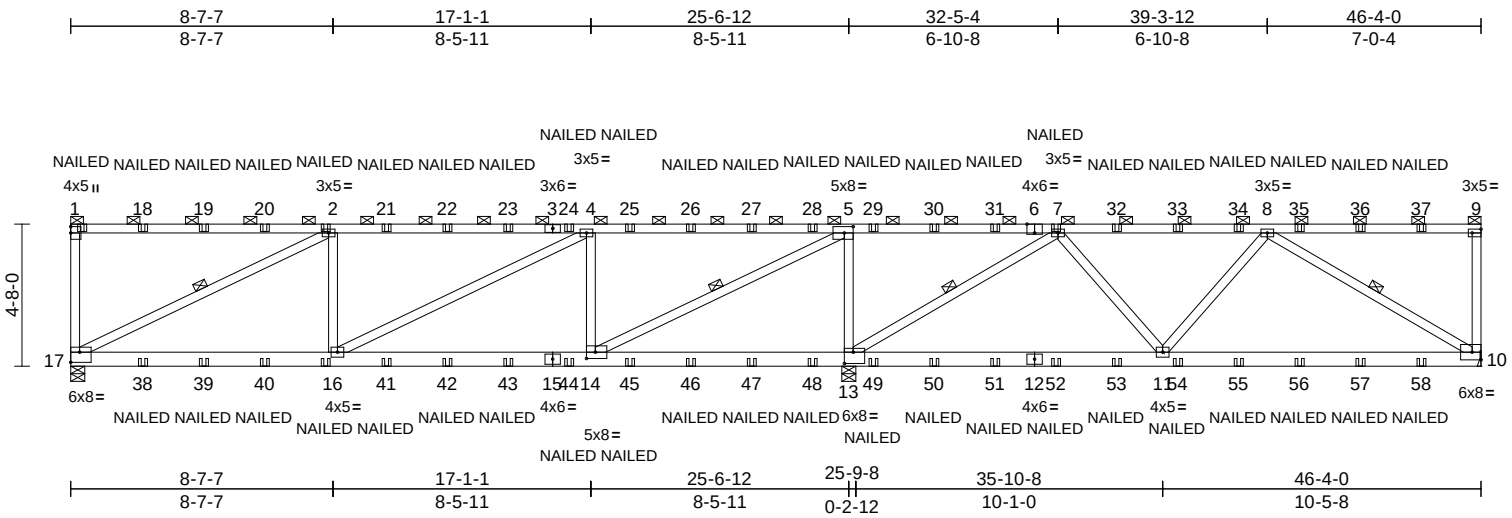

Scale = 1:75.7

Plate Offsets (X, Y): [5:0-3-8,0-2-8], [6:0-3-0,Edge], [9:Edge,0-1-8], [13:0-3-8,0-4-8], [14:0-3-8,0-2-8], [17:Edge,0-4-0]

Loading	(psf)	Spacing	2-0-0	CSI		DEFL	in	(loc)	l/defl	L/d	PLATES	GRIP
TCLL (roof)	20.0	Plate Grip DOL	1.15	TC	0.98	Vert(LL)	-0.14	14-16	>999	240	MT20	244/190
Snow (Pf)	20.0	Lumber DOL	1.15	BC	0.67	Vert(CT)	-0.24	10-11	>999	180		
TCDL	10.0	Rep Stress Incr	YES	WB	1.00	Horz(CT)	0.04	10	n/a	n/a		
BCLL	0.0*	Code	IRC2018/TPI2014	Matrix-MSH								
BCDL	10.0										Weight: 285 lb	FT = 20%

LUMBER

TOP CHORD 2x4 SP 2400F 2.0E *Except* 6-9:2x4 SP No.1
BOT CHORD 2x6 SP No.2
WEBS 2x4 SP No.3 *Except* 17-1,9-10,2-17,4-16,5-14:2x4 SP No.2

BRACING

TOP CHORD 2-0-0 oc purlins (2-2-0 max.): 1-9, except end verticals.
BOT CHORD Rigid ceiling directly applied or 5-8-5 oc bracing.
WEBS 1 Row at midpt 2-17, 5-14, 7-13, 8-10

REACTIONS (size) 10= Mechanical, 13=0-5-8, 17=0-5-8
Max Uplift 10=-444 (LC 10), 13=-1616 (LC 10), 17=-583 (LC 10)
Max Grav 10=1180 (LC 1), 13=4203 (LC 1), 17=1612 (LC 1)

FORCES (lb) - Maximum Compression/Maximum Tension
TOP CHORD 1-17=-390/191, 1-2=-75/35, 2-4=-2274/940, 4-5=-1655/695, 5-7=-604/1486, 7-8=-1104/408, 8-9=-60/22, 9-10=-304/170
BOT CHORD 16-17=-940/2274, 14-16=-695/1655, 13-14=-1486/604, 11-13=-296/637, 10-11=-549/1230
WEBS 5-13=-2530/1187, 2-16=0/344, 2-17=-2466/1015, 4-16=-274/694, 4-14=-1305/682, 5-14=-1456/3521, 7-11=-179/747, 7-13=-2503/1061, 8-11=-223/226, 8-10=-1380/621

NOTES

1) Wind: ASCE 7-16; Vult=130mph (3-second gust) Vasd=103mph; TCDL=6.0psf; BCDL=6.0psf; h=25ft; Cat. II; Exp B; Enclosed; MWFRS (envelope) exterior zone and C-C Corner (3) 0-1-12 to 5-1-12, Exterior (2) 5-1-12 to 41-2-4, Corner (3) 41-2-4 to 46-2-4 zone;C-C for members and forces & MWFRS for reactions shown; Lumber DOL=1.60 plate grip DOL=1.60
2) TCLL: ASCE 7-16; Pr=20.0 psf (roof LL: Lum DOL=1.15 Plate DOL=1.15); Pf=20.0 psf (Lum DOL=1.15 Plate DOL=1.15); Is=1.0; Rough Cat B; Fully Exp.; Ce=0.9; Cs=1.00; Ct=1.10
3) Unbalanced snow loads have been considered for this design.
4) Provide adequate drainage to prevent water ponding.
5) This truss has been designed for a 10.0 psf bottom chord live load nonconcurrent with any other live loads.
6) * This truss has been designed for a live load of 20.0psf on the bottom chord in all areas where a rectangle 3-06-00 tall by 2-00-00 wide will fit between the bottom chord and any other members.
7) Refer to girder(s) for truss to truss connections.
8) Provide mechanical connection (by others) of truss to bearing plate capable of withstanding 444 lb uplift at joint 10 and 1616 lb uplift at joint 13.
9) H10A Simpson Strong-Tie connectors recommended to connect truss to bearing walls due to UPLIFT at jt(s) 17. This connection is for uplift only and does not consider lateral forces.
10) This truss is designed in accordance with the 2018 International Residential Code sections R502.11.1 and R802.10.2 and referenced standard ANSI/TPI 1.
11) Graphical purlin representation does not depict the size or the orientation of the purlin along the top and/or bottom chord.
12) "NAILED" indicates 3-10d (0.148"x3") or 3-12d (0.148"x3.25") toe-nails per NDS guidlines.
13) In the LOAD CASE(S) section, loads applied to the face of the truss are noted as front (F) or back (B).

LOAD CASE(S) Standard

1) Dead + Snow (balanced): Lumber Increase=1.15, Plate Increase=1.15
Uniform Loads (lb/ft)
Vert: 1-9=-60, 10-17=-20
Concentrated Loads (lb)
Vert: 1=-25 (F), 2=-118 (F), 16=-32 (F), 7=-118 (F), 18=-118 (F), 19=-118 (F), 20=-118 (F), 21=-118 (F), 22=-118 (F), 23=-118 (F), 24=-118 (F), 25=-118 (F), 26=-118 (F), 27=-118 (F), 28=-118 (F), 29=-118 (F), 30=-118 (F), 31=-118 (F), 32=-118 (F), 33=-118 (F), 34=-118 (F), 35=-118 (F), 36=-118 (F), 37=-118 (F), 38=-32 (F), 39=-32 (F), 40=-32 (F), 41=-32 (F), 42=-32 (F), 43=-32 (F), 44=-32 (F), 45=-32 (F), 46=-32 (F), 47=-32 (F), 48=-32 (F), 49=-32 (F), 50=-32 (F), 51=-32 (F), 52=-32 (F), 53=-32 (F), 54=-32 (F), 55=-32 (F), 56=-32 (F), 57=-32 (F), 58=-32 (F)

June 16,2025

WARNING - Verify design parameters and READ NOTES ON THIS AND INCLUDED MITEK REFERENCE PAGE MII-7473 rev. 1/2/2023 BEFORE USE.
Design valid for use only with MiTek® connectors. This design is based only upon parameters shown, and is for an individual building component, not a truss system. Before use, the building designer must verify the applicability of design parameters and properly incorporate this design into the overall building design. Bracing indicated is to prevent buckling of individual truss web and/or chord members only. Additional temporary and permanent bracing is always required for stability and to prevent collapse with possible personal injury and property damage. For general guidance regarding the fabrication, storage, delivery, erection and bracing of trusses and truss systems, see **ANSI/TPI1 Quality Criteria and DSB-22** available from Truss Plate Institute (www.tpinst.org) and **BCSI Building Component Safety Information** available from the Structural Building Component Association (www.sbcacomponents.com)

ENGINEERING BY TRENCO A MiTek Affiliate
818 Soundside Road
Edenton, NC 27932

Job	Truss	Truss Type	Qty	Ply	926 Serenity-Roof-329 A CP GLH
25060033-01	A02	Hip	1	1	I74200563 Job Reference (optional)

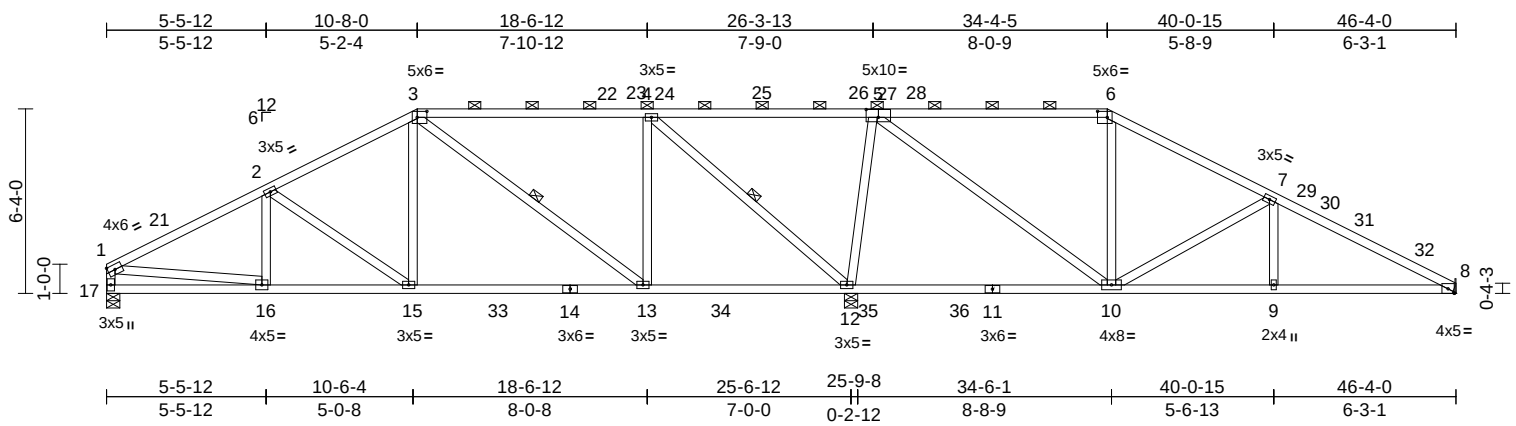

Scale = 1:79.1

Plate Offsets (X, Y): [3:0-4-0,0-2-8], [5:0-5-0,0-3-4], [6:0-4-0,0-2-8]

Loading	(psf)	Spacing	2-0-0	CSI		DEFL	in	(loc)	l/defl	L/d	PLATES	GRIP
TCLL (roof)	20.0	Plate Grip DOL	1.15	TC	0.89	Vert(LL)	-0.19	10-12	>999	240	MT20	244/190
Snow (Pf)	20.0	Lumber DOL	1.15	BC	0.67	Vert(CT)	-0.32	10-12	>769	180		
TCDL	10.0	Rep Stress Incr	YES	WB	0.98	Horz(CT)	0.03	8	n/a	n/a		
BCLL	0.0*	Code	IRC2018/TPI2014	Matrix-MSH								
BCDL	10.0										Weight: 253 lb	FT = 20%

LUMBER
TOP CHORD 2x4 SP No.2 *Except* 3-5,5-6:2x4 SP No.1
BOT CHORD 2x4 SP No.2
WEBS 2x4 SP No.3

BRACING
TOP CHORD Structural wood sheathing directly applied or 4-2-12 oc purlins, except end verticals, and 2-0-0 oc purlins (3-4-5 max.): 3-6.
BOT CHORD Rigid ceiling directly applied or 10-0-0 oc bracing, Except:
6-0-0 oc bracing: 10-12.
WEBS 1 Row at midpt 3-13, 4-12

REACTIONS (size) 8= Mechanical, 12=0-5-8, 17=0-5-8
Max Horiz 17=-97 (LC 19)
Max Uplift 8=-121 (LC 15), 12=-192 (LC 10), 17=-135 (LC 14)
Max Grav 8=831 (LC 44), 12=2616 (LC 45), 17=1070 (LC 36)

FORCES (lb) - Maximum Compression/Maximum Tension
TOP CHORD 1-2=-1519/218, 2-3=-1160/220, 3-4=-596/178, 4-6=-419/857, 6-7=-606/183, 7-8=-1356/231, 1-17=-987/165
BOT CHORD 16-17=-96/246, 15-16=-206/1284, 13-15=-104/952, 12-13=-79/578, 10-12=-738/158, 9-10=-134/1149, 8-9=-134/1149
WEBS 2-16=-60/97, 2-15=-520/123, 3-15=0/570, 3-13=-717/68, 4-13=0/724, 4-12=-1857/229, 5-12=-1373/268, 5-10=-119/1367, 6-10=-269/97, 7-10=-844/179, 7-9=0/224, 1-16=-111/1078

NOTES
1) Unbalanced roof live loads have been considered for this design.
2) Wind: ASCE 7-16; Vult=130mph (3-second gust) Vasd=103mph; TCDL=6.0psf; BCDL=6.0psf; h=25ft; Cat. II; Exp B; Enclosed; MWFRS (envelope) exterior zone and C-C Exterior(2E) 0-1-12 to 4-9-4, Exterior(2R) 4-9-4 to 17-2-8, Interior (1) 17-2-8 to 27-9-13, Exterior(2R) 27-9-13 to 40-10-13, Interior (1) 40-10-13 to 41-8-8, Exterior(2E) 41-8-8 to 46-4-0 zone; cantilever left and right exposed ; end vertical left and right exposed;C-C for members and forces & MWFRS for reactions shown; Lumber DOL=1.60 plate grip DOL=1.60
3) TCLL: ASCE 7-16; Pr=20.0 psf (roof LL: Lum DOL=1.15 Plate DOL=1.15); Pf=20.0 psf (Lum DOL=1.15 Plate DOL=1.15); Is=1.0; Rough Cat B; Fully Exp.; Ce=0.9; Cs=1.00; Ct=1.10
4) Unbalanced snow loads have been considered for this design.
5) Provide adequate drainage to prevent water ponding.
6) This truss has been designed for a 10.0 psf bottom chord live load nonconcurrent with any other live loads.
7) * This truss has been designed for a live load of 20.0psf on the bottom chord in all areas where a rectangle 3-06-00 tall by 2-00-00 wide will fit between the bottom chord and any other members, with BCDL = 10.0psf.
8) Refer to girder(s) for truss to truss connections.
9) Provide mechanical connection (by others) of truss to bearing plate capable of withstanding 121 lb uplift at joint 8.
10) One H2.5A Simpson Strong-Tie connectors recommended to connect truss to bearing walls due to UPLIFT at jt(s) 17 and 12. This connection is for uplift only and does not consider lateral forces.
11) This truss is designed in accordance with the 2018 International Residential Code sections R502.11.1 and R802.10.2 and referenced standard ANSI/TPI 1.
12) Graphical purlin representation does not depict the size or the orientation of the purlin along the top and/or bottom chord.

LOAD CASE(S) Standard

June 16,2025

WARNING - Verify design parameters and READ NOTES ON THIS AND INCLUDED MITEK REFERENCE PAGE MII-7473 rev. 1/2/2023 BEFORE USE.
Design valid for use only with MiTek® connectors. This design is based only upon parameters shown, and is for an individual building component, not a truss system. Before use, the building designer must verify the applicability of design parameters and properly incorporate this design into the overall building design. Bracing indicated is to prevent buckling of individual truss web and/or chord members only. Additional temporary and permanent bracing is always required for stability and to prevent collapse with possible personal injury and property damage. For general guidance regarding the fabrication, storage, delivery, erection and bracing of trusses and truss systems, see **ANSI/TPI1 Quality Criteria and DSB-22** available from Truss Plate Institute (www.tpinst.org) and **BCSI Building Component Safety Information** available from the Structural Building Component Association (www.sbcacomponents.com)

ENGINEERING BY TRENCO A MiTek Affiliate
818 Soundside Road
Edenton, NC 27932

Job	Truss	Truss Type	Qty	Ply	926 Serenity-Roof-329 A CP GLH
25060033-01	A03	Hip	1	1	I74200564 Job Reference (optional)

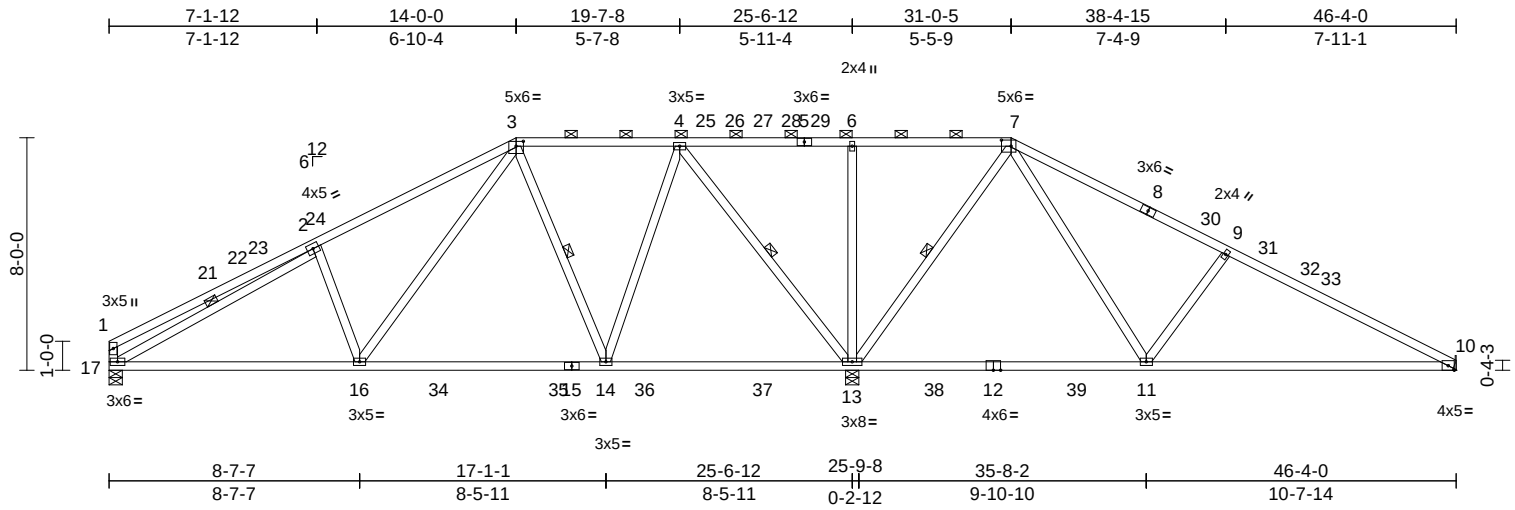

Scale = 1:79.3

Plate Offsets (X, Y): [3:0-3-0,0-2-0], [7:0-4-0,0-2-8]

Loading	(psf)	Spacing	2-0-0	CSI		DEFL	in	(loc)	l/defl	L/d	PLATES	GRIP
TCLL (roof)	20.0	Plate Grip DOL	1.15	TC	0.97	Vert(LL)	-0.29	11-13	>854	240	MT20	244/190
Snow (Pf)	20.0	Lumber DOL	1.15	BC	0.85	Vert(CT)	-0.49	11-20	>513	180		
TCDL	10.0	Rep Stress Incr	YES	WB	0.75	Horz(CT)	0.02	13	n/a	n/a		
BCLL	0.0*	Code	IRC2018/TPI2014	Matrix-MSH								
BCDL	10.0										Weight: 258 lb	FT = 20%

LUMBER
TOP CHORD 2x4 SP No.2 *Except* 8-10:2x4 SP No.1
BOT CHORD 2x4 SP No.1 *Except* 15-12:2x4 SP No.2
WEBS 2x4 SP No.3

BRACING
TOP CHORD Structural wood sheathing directly applied, except end verticals, and 2-0-0 oc purlins (6-0-0 max.): 3-7.
BOT CHORD Rigid ceiling directly applied or 6-0-0 oc bracing.
WEBS 1 Row at midpt 2-17, 4-13, 7-13, 3-14

REACTIONS (size) 10= Mechanical, 13=0-5-8, 17=0-5-8
Max Horiz 17=-137 (LC 15)
Max Uplift 10=-112 (LC 15), 13=-153 (LC 15), 17=-124 (LC 14)
Max Grav 10=715 (LC 44), 13=2693 (LC 45), 17=1006 (LC 36)

FORCES (lb) - Maximum Compression/Maximum Tension
TOP CHORD 1-2=-436/120, 2-3=-1340/280, 3-4=-468/163, 4-6=0/901, 6-7=0/901, 7-9=-727/219, 9-10=-1049/218, 1-17=-348/117
BOT CHORD 16-17=-214/1225, 14-16=-56/601, 13-14=-141/295, 11-13=-208/127, 10-11=-106/895
WEBS 2-17=-1088/99, 4-13=-1560/218, 6-13=-539/151, 7-13=-1359/175, 7-11=-101/1132, 9-11=-700/255, 2-16=-545/233, 3-16=-131/945, 3-14=-643/141, 4-14=-36/1008

NOTES
1) Unbalanced roof live loads have been considered for this design.
2) Wind: ASCE 7-16; Vult=130mph (3-second gust) Vasd=103mph; TCDL=6.0psf; BCDL=6.0psf; h=25ft; Cat. II; Exp B; Enclosed; MWFRS (envelope) exterior zone and C-C Exterior(2E) 0-1-12 to 4-9-4, Interior (1) 4-9-4 to 7-5-8, Exterior(2R) 7-5-8 to 20-6-8, Interior (1) 20-6-8 to 24-5-13, Exterior(2R) 24-5-13 to 37-6-13, Interior (1) 37-6-13 to 41-8-8, Exterior(2E) 41-8-8 to 46-4-0 zone;C-C for members and forces & MWFRS for reactions shown; Lumber DOL=1.60 plate grip DOL=1.60
3) TCLL: ASCE 7-16; Pr=20.0 psf (roof LL: Lum DOL=1.15 Plate DOL=1.15); Pf=20.0 psf (Lum DOL=1.15 Plate DOL=1.15); Is=1.0; Rough Cat B; Fully Exp.; Ce=0.9; Cs=1.00; Ct=1.10
4) Unbalanced snow loads have been considered for this design.
5) Provide adequate drainage to prevent water ponding.
6) This truss has been designed for a 10.0 psf bottom chord live load nonconcurrent with any other live loads.
7) * This truss has been designed for a live load of 20.0psf on the bottom chord in all areas where a rectangle 3-06-00 tall by 2-00-00 wide will fit between the bottom chord and any other members, with BCDL = 10.0psf.
8) Refer to girder(s) for truss to truss connections.
9) Provide mechanical connection (by others) of truss to bearing plate capable of withstanding 112 lb uplift at joint 10.
10) One H2.5A Simpson Strong-Tie connectors recommended to connect truss to bearing walls due to UPLIFT at jt(s) 17 and 13. This connection is for uplift only and does not consider lateral forces.
11) This truss is designed in accordance with the 2018 International Residential Code sections R502.11.1 and R802.10.2 and referenced standard ANSI/TPI 1.
12) Graphical purlin representation does not depict the size or the orientation of the purlin along the top and/or bottom chord.

LOAD CASE(S) Standard

June 16,2025

WARNING - Verify design parameters and READ NOTES ON THIS AND INCLUDED MITEK REFERENCE PAGE MII-7473 rev. 1/2/2023 BEFORE USE.
Design valid for use only with MiTek® connectors. This design is based only upon parameters shown, and is for an individual building component, not a truss system. Before use, the building designer must verify the applicability of design parameters and properly incorporate this design into the overall building design. Bracing indicated is to prevent buckling of individual truss web and/or chord members only. Additional temporary and permanent bracing is always required for stability and to prevent collapse with possible personal injury and property damage. For general guidance regarding the fabrication, storage, delivery, erection and bracing of trusses and truss systems, see **ANSI/TPI1 Quality Criteria and DSB-22** available from Truss Plate Institute (www.tpinst.org) and **BCSI Building Component Safety Information** available from the Structural Building Component Association (www.sbcacomponents.com)

ENGINEERING BY TRENCO A MiTek Affiliate
818 Soundside Road
Edenton, NC 27932

Job	Truss	Truss Type	Qty	Ply	926 Serenity-Roof-329 A CP GLH
25060033-01	A04	Piggyback Base	1	1	I74200565 Job Reference (optional)

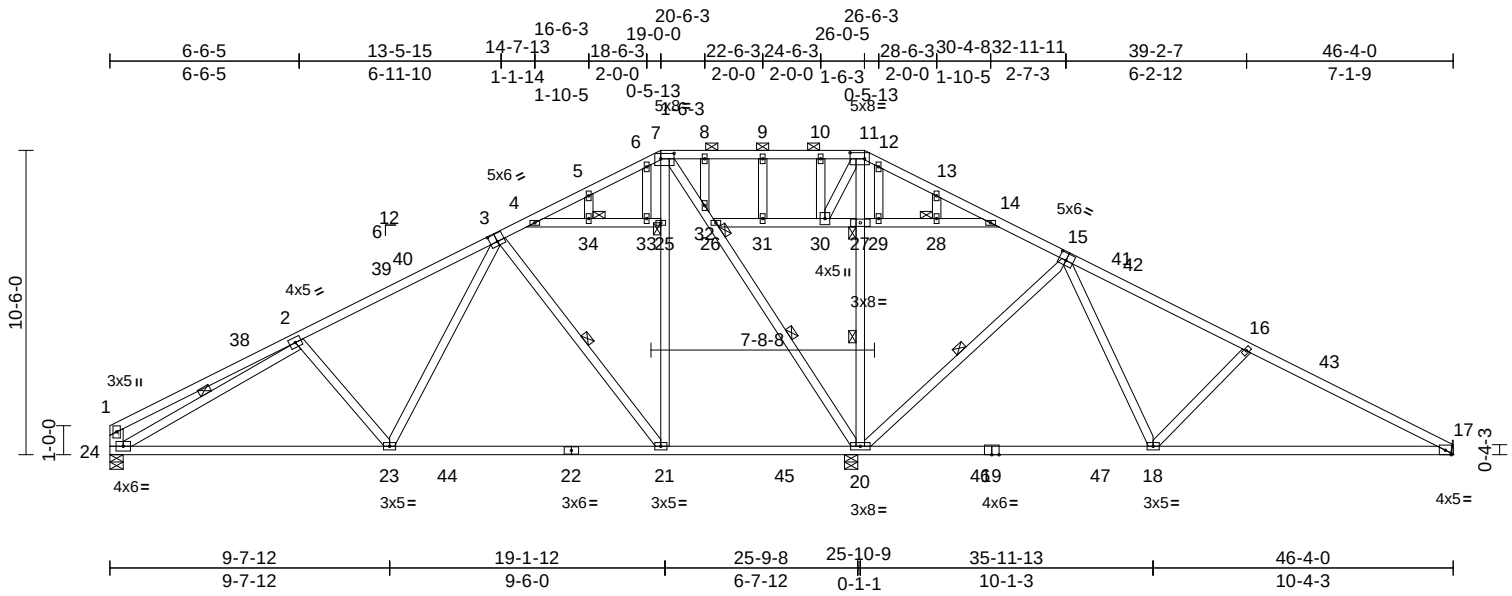

Scale = 1:79.5

Plate Offsets (X, Y): [3:0-3-0,0-3-4], [7:0-5-8,0-2-4], [11:0-6-0,0-2-8], [15:0-3-0,0-3-0]

Loading	(psf)	Spacing	2-0-0	CSI		DEFL	in	(loc)	l/defl	L/d	PLATES	GRIP
TCLL (roof)	20.0	Plate Grip DOL	1.15	TC	0.65	Vert(LL)	-0.29	18-20	>849	240	MT20	244/190
Snow (Pf)	20.0	Lumber DOL	1.15	BC	0.81	Vert(CT)	-0.43	18-20	>576	180		
TCDL	10.0	Rep Stress Incr	YES	WB	0.67	Horz(CT)	0.03	20	n/a	n/a		
BCLL	0.0*	Code	IRC2018/TPI2014	Matrix-MSH								
BCDL	10.0										Weight: 310 lb	FT = 20%

LUMBER

TOP CHORD 2x4 SP No.2
BOT CHORD 2x4 SP No.1 *Except* 22-19:2x4 SP No.2
WEBS 2x4 SP No.3 *Except* 7-20:2x4 SP No.2, 24-1:2x6 SP No.2

BRACING

TOP CHORD Structural wood sheathing directly applied or 4-9-3 oc purlins, except end verticals, and 2-0-0 oc purlins (10-0-0 max.): 7-11.
BOT CHORD Rigid ceiling directly applied or 6-0-0 oc bracing.
WEBS 1 Row at midpt 3-21, 20-26, 20-27, 15-20, 2-24
JOINTS 1 Brace at Jt(s): 25, 26, 27, 28, 34

REACTIONS (size) 17= Mechanical, 20=0-5-8, 24=0-5-8
Max Horiz 24=-177 (LC 15)
Max Uplift 17=-102 (LC 15), 20=-104 (LC 15), 24=-101 (LC 14)
Max Grav 17=594 (LC 38), 20=2907 (LC 46), 24=938 (LC 36)

FORCES (lb) - Maximum Compression/Maximum Tension
TOP CHORD 1-2=-410/86, 2-4=-1164/177, 4-5=-193/148, 5-6=-161/184, 6-7=-88/180, 7-8=0/885, 8-9=0/885, 9-10=0/885, 10-11=0/885, 11-12=-37/1222, 12-13=-25/1151, 13-14=-65/1148, 14-16=-511/814, 16-17=-786/195, 1-24=-321/96
BOT CHORD 23-24=-230/1109, 21-23=-80/668, 20-21=-78/276, 18-20=-199/136, 17-18=-92/660
WEBS 2-23=-316/209, 3-23=-39/722, 3-21=-899/225, 21-25=-85/1042, 7-25=-75/978, 7-32=-1719/173, 26-32=-1631/151, 20-26=-1548/141, 20-27=-935/230, 11-27=-1030/276, 15-20=-990/216, 2-24=-996/102, 15-18=-34/859, 16-18=-457/209, 4-34=-65/6, 33-34=-65/6, 25-33=-65/6, 26-31=-187/77, 30-31=-187/77, 27-30=-322/123, 27-29=-276/112, 28-29=-276/112, 14-28=-276/112, 13-28=-156/62, 12-29=-44/114, 10-30=-235/72, 9-31=-105/49, 8-32=-186/147, 6-33=-58/132, 5-34=-113/53, 11-30=-171/432

NOTES

1) Unbalanced roof live loads have been considered for this design.
2) Wind: ASCE 7-16; Vult=130mph (3-second gust) Vasd=103mph; TCDL=6.0psf; BCDL=6.0psf; h=25ft; Cat. II; Exp B; Enclosed; MWFRS (envelope) exterior zone and C-C Exterior(2E) 0-2-12 to 4-10-4, Interior (1) 4-10-4 to 14-3-15, Exterior(2R) 14-3-15 to 30-8-7, Interior (1) 30-8-7 to 41-8-8, Exterior(2E) 41-8-8 to 46-4-0 zone;C-C for members and forces & MWFRS for reactions shown; Lumber DOL=1.60 plate grip DOL=1.60
3) Truss designed for wind loads in the plane of the truss only. For studs exposed to wind (normal to the face), see Standard Industry Gable End Details as applicable, or consult qualified building designer as per ANSI/TPI 1.
4) TCLL: ASCE 7-16; Pr=20.0 psf (roof LL: Lum DOL=1.15 Plate DOL=1.15); Pf=20.0 psf (Lum DOL=1.15 Plate DOL=1.15); Is=1.0; Rough Cat B; Fully Exp.; Ce=0.9; Cs=1.00; Ct=1.10
5) Unbalanced snow loads have been considered for this design.
6) Provide adequate drainage to prevent water ponding.
7) All plates are 2x4 MT20 unless otherwise indicated.
8) Gable studs spaced at 2-0-0 oc.
9) This truss has been designed for a 10.0 psf bottom chord live load nonconcurrent with any other live loads.
10) * This truss has been designed for a live load of 20.0psf on the bottom chord in all areas where a rectangle 3-06-00 tall by 2-00-00 wide will fit between the bottom chord and any other members, with BCDL = 10.0psf.
11) Refer to girder(s) for truss to truss connections.
12) Provide mechanical connection (by others) of truss to bearing plate capable of withstanding 102 lb uplift at joint 17.
13) H10A Simpson Strong-Tie connectors recommended to connect truss to bearing walls due to UPLIFT at jt(s) 20. This connection is for uplift only and does not consider lateral forces.
14) One H2.5A Simpson Strong-Tie connectors recommended to connect truss to bearing walls due to UPLIFT at jt(s) 24. This connection is for uplift only and does not consider lateral forces.
15) This truss is designed in accordance with the 2018 International Residential Code sections R502.11.1 and R802.10.2 and referenced standard ANSI/TPI 1.

NORTH CAROLINA PROFESSIONAL SEAL 036322 ENGINEER ERIC A. GILBERT

June 16,2025

Continued on page 2

WARNING - Verify design parameters and READ NOTES ON THIS AND INCLUDED MITEK REFERENCE PAGE MII-7473 rev. 1/2/2023 BEFORE USE.
Design valid for use only with MiTek® connectors. This design is based only upon parameters shown, and is for an individual building component, not a truss system. Before use, the building designer must verify the applicability of design parameters and properly incorporate this design into the overall building design. Bracing indicated is to prevent buckling of individual truss web and/or chord members only. Additional temporary and permanent bracing is always required for stability and to prevent collapse with possible personal injury and property damage. For general guidance regarding the fabrication, storage, delivery, erection and bracing of trusses and truss systems, see **ANSI/TPI1 Quality Criteria and DSB-22** available from Truss Plate Institute (www.tpinst.org) and **BCSI Building Component Safety Information** available from the Structural Building Component Association (www.sbcacomponents.com)

ENGINEERING BY TRENCO A MiTek Affiliate
818 Soundside Road
Edenton, NC 27932

16) Graphical purlin representation does not depict the size or the orientation of the purlin along the top and/or bottom chord.

LOAD CASE(S) Standard

June 16,2025

WARNING - Verify design parameters and READ NOTES ON THIS AND INCLUDED MITEK REFERENCE PAGE MII-7473 rev. 1/2/2023 BEFORE USE.
Design valid for use only with MiTek® connectors. This design is based only upon parameters shown, and is for an individual building component, not a truss system. Before use, the building designer must verify the applicability of design parameters and properly incorporate this design into the overall building design. Bracing indicated is to prevent buckling of individual truss web and/or chord members only. Additional temporary and permanent bracing is always required for stability and to prevent collapse with possible personal injury and property damage. For general guidance regarding the fabrication, storage, delivery, erection and bracing of trusses and truss systems, see **ANSI/TPI1 Quality Criteria and DSB-22** available from Truss Plate Institute (www.tpinst.org) and **BCSI Building Component Safety Information** available from the Structural Building Component Association (www.sbcacomponents.com)

ENGINEERING BY TRENCO A MiTek Affiliate
818 Soundside Road
Edenton, NC 27932

Job	Truss	Truss Type	Qty	Ply	926 Serenity-Roof-329 A CP GLH
25060033-01	A05	Piggyback Base	3	1	I74200566 Job Reference (optional)

Carter Components (Sanford, NC), Sanford, NC - 27332,

Run: 8.73 S Feb 19 2025 Print: 8.730 S Feb 19 2025 MiTek Industries, Inc. Fri Jun 13 10:53:28 Page: 1
ID:JB5bLQFGF3C9vTBFkpkf65yi2p3-RfC?PsB70Hq3NSgPqnL8w3uITXbGKWrCDoi7J4zJC?f

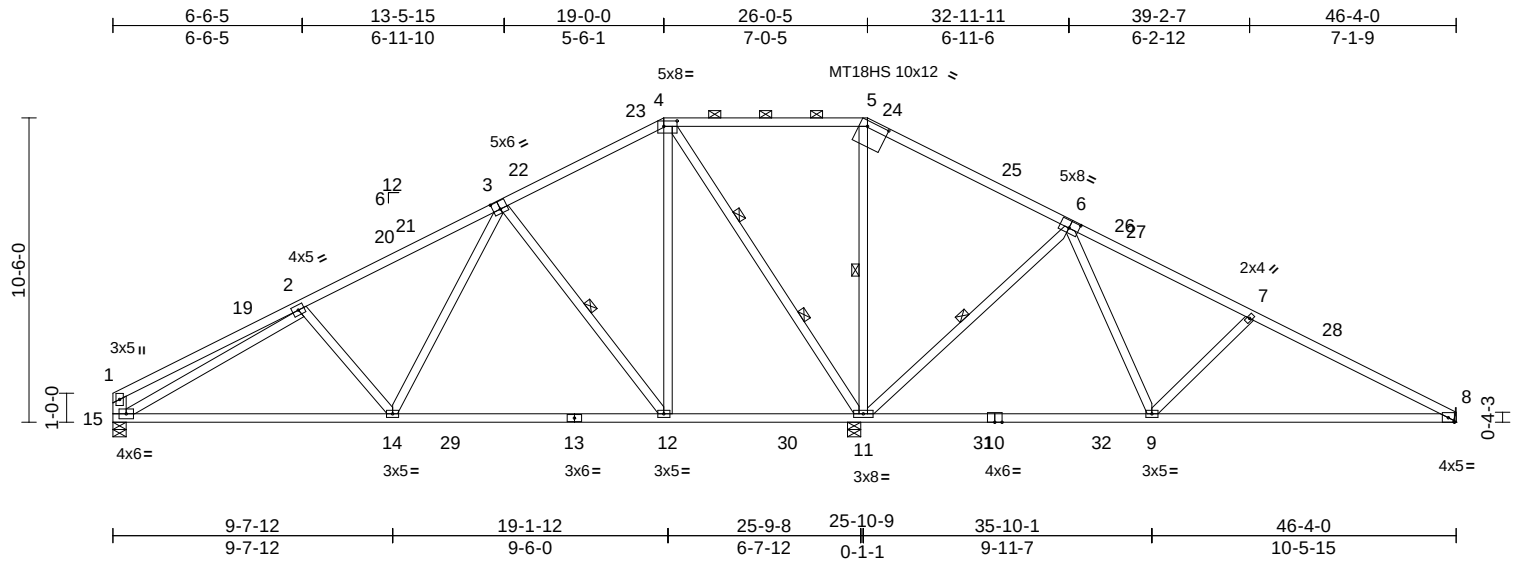

Scale = 1:79.5

Plate Offsets (X, Y): [3:0-3-0,0-3-4], [4:0-5-8,0-2-4], [5:0-8-12,0-2-4], [6:0-4-0,0-3-0]

Loading	(psf)	Spacing	2-0-0	CSI		DEFL	in	(loc)	l/defl	L/d	PLATES	GRIP
TCLL (roof)	20.0	Plate Grip DOL	1.15	TC	0.98	Vert(LL)	-0.27	9-11	>921	240	MT20	244/190
Snow (Pf)	20.0	Lumber DOL	1.15	BC	0.81	Vert(CT)	-0.44	9-18	>554	180	MT18HS	244/190
TCDL	10.0	Rep Stress Incr	YES	WB	1.00	Horz(CT)	0.03	11	n/a	n/a		
BCLL	0.0*	Code	IRC2018/TPI2014	Matrix-MSH								
BCDL	10.0										Weight: 268 lb	FT = 20%

LUMBER

TOP CHORD 2x4 SP No.2 *Except* 4-5:2x4 SP No.1
BOT CHORD 2x4 SP No.1 *Except* 13-10:2x4 SP No.2
WEBS 2x4 SP No.3 *Except* 11-4:2x4 SP No.2, 15-1:2x6 SP No.2

BRACING

TOP CHORD Structural wood sheathing directly applied, except end verticals, and 2-0-0 oc purlins (10-0-0 max.): 4-5.
BOT CHORD Rigid ceiling directly applied or 6-0-0 oc bracing.
WEBS 1 Row at midpt 3-12, 5-11, 6-11
WEBS 2 Rows at 1/3 pts 4-11

REACTIONS (size) 8= Mechanical, 11=0-5-8, 15=0-5-8
Max Horiz 15=-177 (LC 15)
Max Uplift 8=-100 (LC 15), 11=-108 (LC 15), 15=-100 (LC 14)
Max Grav 8=582 (LC 38), 11=2933 (LC 46), 15=931 (LC 36)

FORCES (lb) - Maximum Compression/Maximum Tension
TOP CHORD 1-2=-413/88, 2-4=-1140/175, 4-5=0/814, 5-7=-469/1021, 7-8=-747/188, 1-15=-324/98
BOT CHORD 14-15=-227/1092, 12-14=-79/661, 11-12=-100/288, 9-11=-207/128, 8-9=-85/624
WEBS 2-14=-314/206, 3-14=-37/719, 3-12=-939/232, 4-12=-90/1075, 4-11=-1648/169, 5-11=-825/175, 6-11=-1099/250, 2-15=-978/97, 6-9=-24/837, 7-9=-447/200

NOTES

1) Unbalanced roof live loads have been considered for this design.
2) Wind: ASCE 7-16; Vult=130mph (3-second gust) Vasd=103mph; TCDL=6.0psf; BCDL=6.0psf; h=25ft; Cat. II; Exp B; Enclosed; MWFRS (envelope) exterior zone and C-C Exterior(2E) 0-2-12 to 4-10-4, Interior (1) 4-10-4 to 14-4-8, Exterior(2R) 14-4-8 to 30-7-13, Interior (1) 30-7-13 to 41-8-8, Exterior(2E) 41-8-8 to 46-4-0 zone;C-C for members and forces & MWFRS for reactions shown; Lumber DOL=1.60 plate grip DOL=1.60
3) TCLL: ASCE 7-16; Pr=20.0 psf (roof LL: Lum DOL=1.15 Plate DOL=1.15); Pf=20.0 psf (Lum DOL=1.15 Plate DOL=1.15); Is=1.0; Rough Cat B; Fully Exp.; Ce=0.9; Cs=1.00; Ct=1.10
4) Unbalanced snow loads have been considered for this design.
5) Provide adequate drainage to prevent water ponding.
6) All plates are MT20 plates unless otherwise indicated.
7) This truss has been designed for a 10.0 psf bottom chord live load nonconcurrent with any other live loads.
8) * This truss has been designed for a live load of 20.0psf on the bottom chord in all areas where a rectangle 3-06-00 tall by 2-00-00 wide will fit between the bottom chord and any other members, with BCDL = 10.0psf.
9) Refer to girder(s) for truss to truss connections.
10) Provide mechanical connection (by others) of truss to bearing plate capable of withstanding 100 lb uplift at joint 8.
11) H10A Simpson Strong-Tie connectors recommended to connect truss to bearing walls due to UPLIFT at jt(s) 11. This connection is for uplift only and does not consider lateral forces.
12) One H2.5A Simpson Strong-Tie connectors recommended to connect truss to bearing walls due to UPLIFT at jt(s) 15. This connection is for uplift only and does not consider lateral forces.
13) This truss is designed in accordance with the 2018 International Residential Code sections R502.11.1 and R802.10.2 and referenced standard ANSI/TPI 1.
14) Graphical purlin representation does not depict the size or the orientation of the purlin along the top and/or bottom chord.

LOAD CASE(S) Standard

June 16,2025

WARNING - Verify design parameters and READ NOTES ON THIS AND INCLUDED MITEK REFERENCE PAGE MII-7473 rev. 1/2/2023 BEFORE USE.
Design valid for use only with MiTek® connectors. This design is based only upon parameters shown, and is for an individual building component, not a truss system. Before use, the building designer must verify the applicability of design parameters and properly incorporate this design into the overall building design. Bracing indicated is to prevent buckling of individual truss web and/or chord members only. Additional temporary and permanent bracing is always required for stability and to prevent collapse with possible personal injury and property damage. For general guidance regarding the fabrication, storage, delivery, erection and bracing of trusses and truss systems, see **ANSI/TPI1 Quality Criteria and DSB-22** available from Truss Plate Institute (www.tpinst.org) and **BCSI Building Component Safety Information** available from the Structural Building Component Association (www.sbcacomponents.com)

ENGINEERING BY TRENCO A MiTek Affiliate
818 Soundside Road
Edenton, NC 27932

Job	Truss	Truss Type	Qty	Ply	926 Serenity-Roof-329 A CP GLH
25060033-01	A06	Piggyback Base	2	1	I74200567 Job Reference (optional)

Carter Components (Sanford, NC), Sanford, NC - 27332, Run: 8.73 S Feb 19 2025 Print: 8.730 S Feb 19 2025 MiTek Industries, Inc. Fri Jun 13 10:53:28 Page: 1
ID:86vrdMjsFRcFbhb4agr6Ivyi2gi-RfC?PsB70Hq3NSgPqnL8w3uITXbGKWrCDoi7J4zJC?f

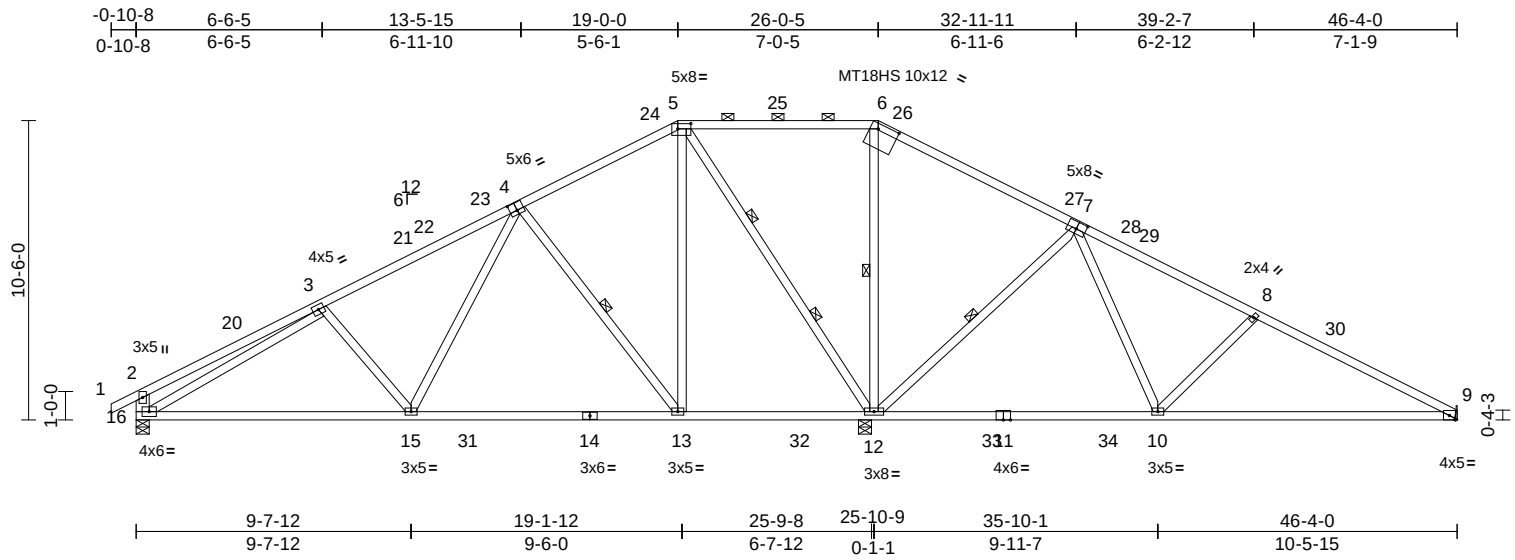

Scale = 1:80.8

Plate Offsets (X, Y): [4:0-3-0,0-3-4], [5:0-5-8,0-2-4], [6:0-8-12,0-2-4], [7:0-4-0,0-3-0]

Loading	(psf)	Spacing	2-0-0	CSI		DEFL	in	(loc)	l/defl	L/d	PLATES	GRIP
TCLL (roof)	20.0	Plate Grip DOL	1.15	TC	0.98	Vert(LL)	-0.27	10-12	>921	240	MT20	244/190
Snow (Pf)	20.0	Lumber DOL	1.15	BC	0.81	Vert(CT)	-0.44	10-19	>554	180	MT18HS	244/190
TCDL	10.0	Rep Stress Incr	YES	WB	0.92	Horz(CT)	0.03	12	n/a	n/a		
BCLL	0.0*	Code	IRC2018/TPI2014	Matrix-MSH								
BCDL	10.0										Weight: 270 lb	FT = 20%

LUMBER
TOP CHORD 2x4 SP No.2 *Except* 5-6:2x4 SP No.1
BOT CHORD 2x4 SP No.1 *Except* 14-11:2x4 SP No.2
WEBS 2x4 SP No.3 *Except* 5-12:2x4 SP No.2, 16-2:2x6 SP No.2

BRACING
TOP CHORD Structural wood sheathing directly applied, except end verticals, and 2-0-0 oc purlins (10-0-0 max.): 5-6.
BOT CHORD Rigid ceiling directly applied or 6-0-0 oc bracing.
WEBS 1 Row at midpt 4-13, 6-12, 7-12
WEBS 2 Rows at 1/3 pts 5-12

REACTIONS (size) 9= Mechanical, 12=0-5-8, 16=0-5-8
Max Horiz 16=-155 (LC 19)
Max Uplift 9=-101 (LC 15), 12=-158 (LC 15), 16=-132 (LC 14)
Max Grav 9=585 (LC 39), 12=2926 (LC 47), 16=990 (LC 37)

FORCES (lb) - Maximum Compression/Maximum Tension
TOP CHORD 1-2=0/30, 2-3=-509/136, 3-5=-1139/193, 5-6=0/805, 6-8=-479/1011, 8-9=-758/192, 2-16=-429/158
BOT CHORD 15-16=-241/1086, 13-15=-98/665, 12-13=-101/284, 10-12=-200/136, 9-10=-88/634
WEBS 3-15=-304/201, 4-15=-33/712, 4-13=-939/228, 5-13=-87/1075, 5-12=-1643/193, 6-12=-821/135, 7-12=-1099/247, 3-16=-904/65, 7-10=-24/836, 8-10=-447/201

NOTES
1) Unbalanced roof live loads have been considered for this design.
2) Wind: ASCE 7-16; Vult=130mph (3-second gust) Vasd=103mph; TCDL=6.0psf; BCDL=6.0psf; h=25ft; Cat. II; Exp B; Enclosed; MWFRS (envelope) exterior zone and C-C Exterior(2E) -0-10-8 to 3-9-0, Interior (1) 3-9-0 to 12-5-8, Exterior(2R) 12-5-8 to 32-6-13, Interior (1) 32-6-13 to 41-8-8, Exterior(2E) 41-8-8 to 46-4-0 zone; cantilever left and right exposed ; end vertical left and right exposed;C-C for members and forces & MWFRS for reactions shown; Lumber DOL=1.60 plate grip DOL=1.60
3) TCLL: ASCE 7-16; Pr=20.0 psf (roof LL: Lum DOL=1.15 Plate DOL=1.15); Pf=20.0 psf (Lum DOL=1.15 Plate DOL=1.15); Is=1.0; Rough Cat B; Fully Exp.; Ce=0.9; Cs=1.00; Ct=1.10
4) Unbalanced snow loads have been considered for this design.
5) This truss has been designed for greater of min roof live load of 12.0 psf or 1.00 times flat roof load of 20.0 psf on overhangs non-concurrent with other live loads.
6) Provide adequate drainage to prevent water ponding.
7) All plates are MT20 plates unless otherwise indicated.
8) This truss has been designed for a 10.0 psf bottom chord live load nonconcurrent with any other live loads.
9) * This truss has been designed for a live load of 20.0psf on the bottom chord in all areas where a rectangle 3-06-00 tall by 2-00-00 wide will fit between the bottom chord and any other members, with BCDL = 10.0psf.
10) Refer to girder(s) for truss to truss connections.
11) Provide mechanical connection (by others) of truss to bearing plate capable of withstanding 101 lb uplift at joint 9.
12) H10A Simpson Strong-Tie connectors recommended to connect truss to bearing walls due to UPLIFT at jt(s) 12. This connection is for uplift only and does not consider lateral forces.
13) One H2.5A Simpson Strong-Tie connectors recommended to connect truss to bearing walls due to UPLIFT at jt(s) 16. This connection is for uplift only and does not consider lateral forces.
14) This truss is designed in accordance with the 2018 International Residential Code sections R502.11.1 and R802.10.2 and referenced standard ANSI/TPI 1.
15) Graphical purlin representation does not depict the size or the orientation of the purlin along the top and/or bottom chord.

LOAD CASE(S) Standard

June 16,2025

WARNING - Verify design parameters and READ NOTES ON THIS AND INCLUDED MITEK REFERENCE PAGE MII-7473 rev. 1/2/2023 BEFORE USE.
Design valid for use only with MiTek® connectors. This design is based only upon parameters shown, and is for an individual building component, not a truss system. Before use, the building designer must verify the applicability of design parameters and properly incorporate this design into the overall building design. Bracing indicated is to prevent buckling of individual truss web and/or chord members only. Additional temporary and permanent bracing is always required for stability and to prevent collapse with possible personal injury and property damage. For general guidance regarding the fabrication, storage, delivery, erection and bracing of trusses and truss systems, see **ANSI/TPI1 Quality Criteria and DSB-22** available from Truss Plate Institute (www.tpinst.org) and **BCSI Building Component Safety Information** available from the Structural Building Component Association (www.sbcacomponents.com)

ENGINEERING BY TRENCO A MiTek Affiliate
818 Soundside Road
Edenton, NC 27932

Job	Truss	Truss Type	Qty	Ply	926 Serenity-Roof-329 A CP GLH
25060033-01	A07	Piggyback Base	1	1	I74200568 Job Reference (optional)

Carter Components (Sanford, NC), Sanford, NC - 27332,

Run: 8.73 S Feb 19 2025 Print: 8.730 S Feb 19 2025 MiTek Industries, Inc. Fri Jun 13 10:53:28 Page: 1
ID:mnZqp49xwCxjCaSirOxFxIyi2dZ-RfC?PsB70Hq3NSgPqnL8w3uITXbGKWrCDoi7J4zJC?f

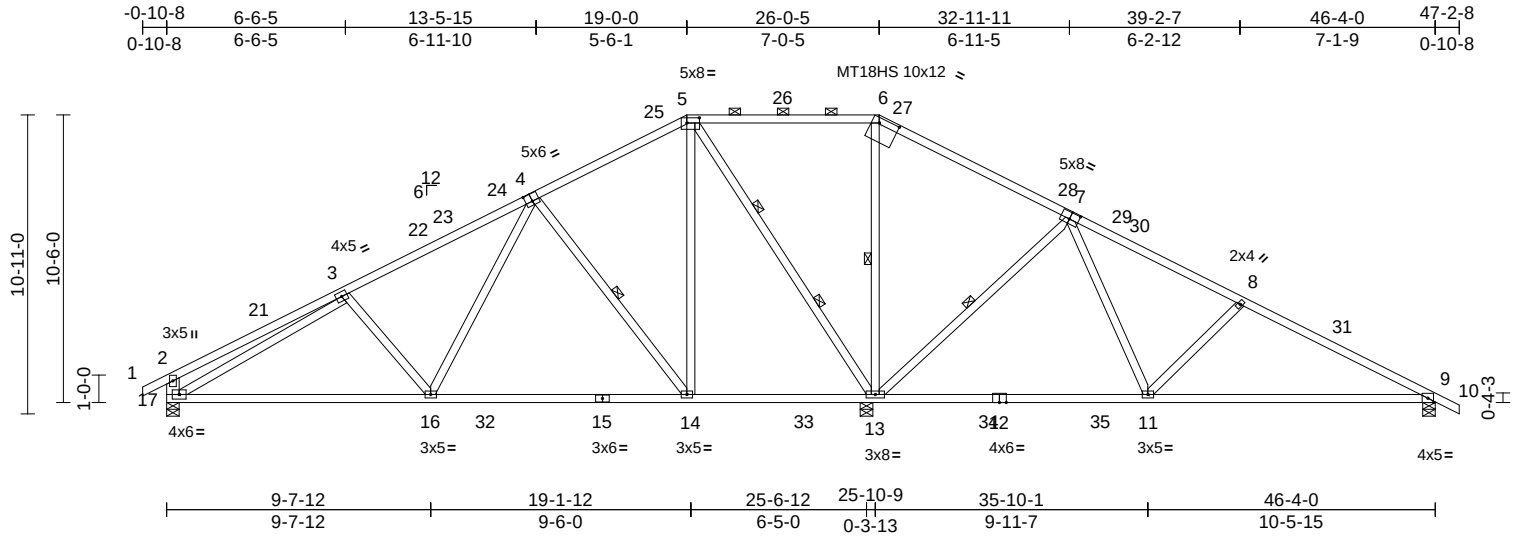

Scale = 1:84.1

Plate Offsets (X, Y): [4:0-3-0,0-3-4], [5:0-5-8,0-2-4], [6:0-8-12,0-2-4], [7:0-4-0,0-3-0]

Loading	(psf)	Spacing	2-0-0	CSI		DEFL	in	(loc)	l/defl	L/d	PLATES	GRIP
TCLL (roof)	20.0	Plate Grip DOL	1.15	TC	0.98	Vert(LL)	-0.27	11-13	>921	240	MT20	244/190
Snow (Pf)	20.0	Lumber DOL	1.15	BC	0.80	Vert(CT)	-0.44	11-20	>560	180	MT18HS	244/190
TCDL	10.0	Rep Stress Incr	YES	WB	0.94	Horz(CT)	0.03	13	n/a	n/a		
BCLL	0.0*	Code	IRC2018/TPI2014	Matrix-MSH								
BCDL	10.0										Weight: 271 lb	FT = 20%

LUMBER

TOP CHORD 2x4 SP No.2 *Except* 5-6:2x4 SP No.1
BOT CHORD 2x4 SP No.1 *Except* 15-12:2x4 SP No.2
WEBS 2x4 SP No.3 *Except* 13-5:2x4 SP No.2, 17-2:2x6 SP No.2

BRACING

TOP CHORD Structural wood sheathing directly applied, except end verticals, and 2-0-0 oc purlins (10-0-0 max.): 5-6.
BOT CHORD Rigid ceiling directly applied or 6-0-0 oc bracing.
WEBS 1 Row at midpt 4-14, 6-13, 7-13
WEBS 2 Rows at 1/3 pts 5-13

REACTIONS (size) 9=0-5-8, 13=0-5-8, 17=0-5-8
Max Horiz 17=-168 (LC 19)
Max Uplift 9=-122 (LC 15), 13=-152 (LC 15), 17=-134 (LC 14)
Max Grav 9=633 (LC 45), 13=2925 (LC 47), 17=994 (LC 37)

FORCES (lb) - Maximum Compression/Maximum Tension
TOP CHORD 1-2=0/30, 2-3=-509/136, 3-5=-1145/195, 5-6=0/806, 6-8=-476/1012, 8-9=-754/197, 9-10=0/23, 2-17=-429/159
BOT CHORD 16-17=-236/1092, 14-16=-93/671, 13-14=-101/291, 11-13=-203/135, 9-11=-78/629
WEBS 3-16=-304/201, 4-16=-33/712, 4-14=-939/228, 5-14=-87/1075, 5-13=-1643/192, 6-13=-822/129, 7-13=-1097/246, 3-17=-916/67, 7-11=-23/834, 8-11=-445/200

NOTES

1) Unbalanced roof live loads have been considered for this design.
2) Wind: ASCE 7-16; Vult=130mph (3-second gust) Vasd=103mph; TCDL=6.0psf; BCDL=6.0psf; h=25ft; Cat. II; Exp B; Enclosed; MWFRS (envelope) exterior zone and C-C Exterior(2E) -0-10-8 to 3-9-0, Interior (1) 3-9-0 to 12-5-8, Exterior(2R) 12-5-8 to 32-6-13, Interior (1) 32-6-13 to 42-7-0, Exterior(2E) 42-7-0 to 47-2-8 zone; end vertical left exposed;C-C for members and forces & MWFRS for reactions shown; Lumber DOL=1.60 plate grip DOL=1.60
3) TCLL: ASCE 7-16; Pr=20.0 psf (roof LL: Lum DOL=1.15 Plate DOL=1.15); Pf=20.0 psf (Lum DOL=1.15 Plate DOL=1.15); Is=1.0; Rough Cat B; Fully Exp.; Ce=0.9; Cs=1.00; Ct=1.10
4) Unbalanced snow loads have been considered for this design.
5) This truss has been designed for greater of min roof live load of 12.0 psf or 1.00 times flat roof load of 20.0 psf on overhangs non-concurrent with other live loads.
6) Provide adequate drainage to prevent water ponding.
7) All plates are MT20 plates unless otherwise indicated.
8) This truss has been designed for a 10.0 psf bottom chord live load nonconcurrent with any other live loads.
9) * This truss has been designed for a live load of 20.0psf on the bottom chord in all areas where a rectangle 3-06-00 tall by 2-00-00 wide will fit between the bottom chord and any other members, with BCDL = 10.0psf.
10) H10A Simpson Strong-Tie connectors recommended to connect truss to bearing walls due to UPLIFT at jt(s) 13. This connection is for uplift only and does not consider lateral forces.
11) One H2.5A Simpson Strong-Tie connectors recommended to connect truss to bearing walls due to UPLIFT at jt(s) 17 and 9. This connection is for uplift only and does not consider lateral forces.
12) This truss is designed in accordance with the 2018 International Residential Code sections R502.11.1 and R802.10.2 and referenced standard ANSI/TPI 1.
13) Graphical purlin representation does not depict the size or the orientation of the purlin along the top and/or bottom chord.

LOAD CASE(S) Standard

June 16,2025

WARNING - Verify design parameters and READ NOTES ON THIS AND INCLUDED MITEK REFERENCE PAGE MII-7473 rev. 1/2/2023 BEFORE USE.
Design valid for use only with MiTek® connectors. This design is based only upon parameters shown, and is for an individual building component, not a truss system. Before use, the building designer must verify the applicability of design parameters and properly incorporate this design into the overall building design. Bracing indicated is to prevent buckling of individual truss web and/or chord members only. Additional temporary and permanent bracing is always required for stability and to prevent collapse with possible personal injury and property damage. For general guidance regarding the fabrication, storage, delivery, erection and bracing of trusses and truss systems, see **ANSI/TPI1 Quality Criteria and DSB-22** available from Truss Plate Institute (www.tpinst.org) and **BCSI Building Component Safety Information** available from the Structural Building Component Association (www.sbcacomponents.com)

ENGINEERING BY TRENCO A MiTek Affiliate
818 Soundside Road
Edenton, NC 27932

Job	Truss	Truss Type	Qty	Ply	926 Serenity-Roof-329 A CP GLH
25060033-01	A08	Attic	2	1	I74200569 Job Reference (optional)

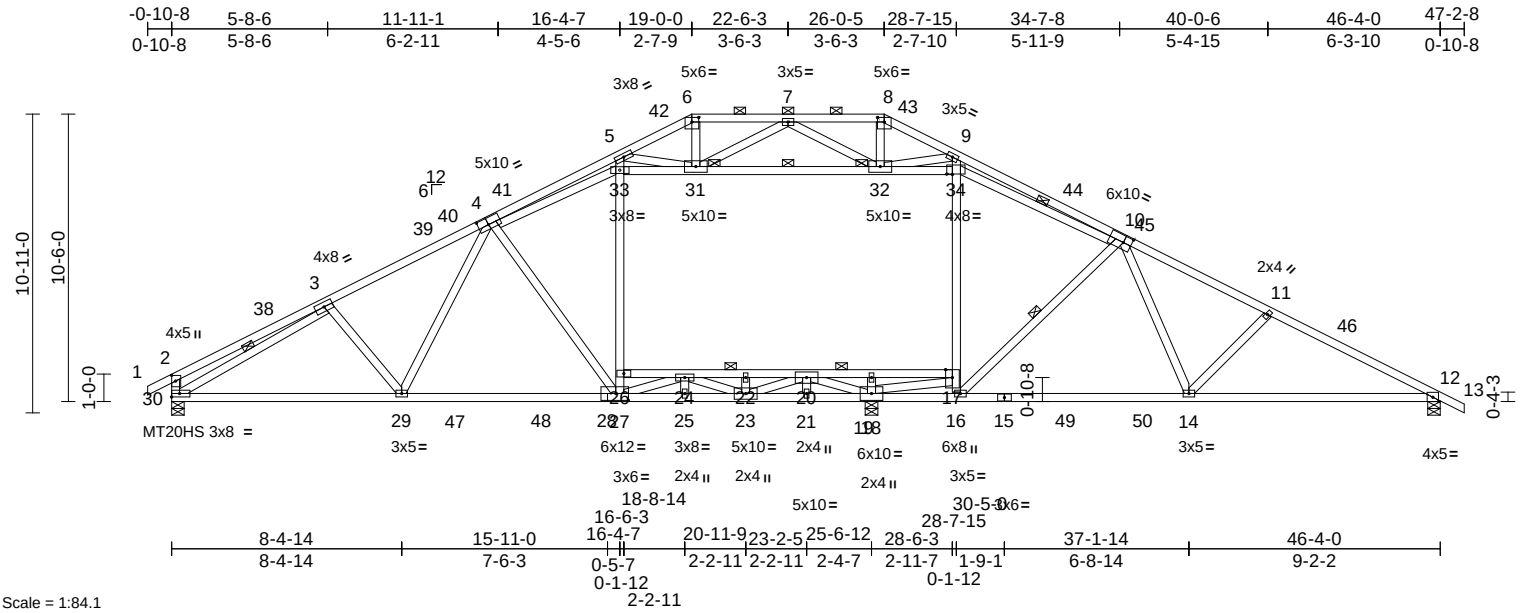

Scale = 1:84.1

Plate Offsets (X, Y): [2:0-2-8,0-1-12], [4:0-4-8,0-3-0], [6:0-3-0,0-2-0], [8:0-3-0,0-2-0], [10:0-3-8,0-3-0], [28:0-5-8,0-3-0], [34:0-2-8,0-0-3]

Loading	(psf)	Spacing	2-0-0	CSI		DEFL	in	(loc)	l/defl	L/d	PLATES	GRIP
TCLL (roof)	20.0	Plate Grip DOL	1.15	TC	0.69	Vert(LL)	-0.56	27-29	>540	240	MT20	244/190
Snow (Pf)	20.0	Lumber DOL	1.15	BC	0.94	Vert(CT)	-0.90	27-29	>336	180	MT20HS	187/143
TCDL	10.0	Rep Stress Incr	YES	WB	0.88	Horz(CT)	0.15	12	n/a	n/a		
BCLL	0.0*	Code	IRC2018/TPI2014	Matrix-MSH		Attic	-0.33	17-26	>440	360		
BCDL	10.0										Weight: 334 lb	FT = 20%

LUMBER

TOP CHORD 2x4 SP No.2
BOT CHORD 2x4 SP No.1 *Except* 26-17:2x4 SP 2400F 2.0E
WEBS 2x4 SP No.3 *Except* 5-27,9-16:2x4 SP 2400F 2.0E, 33-34:2x4 SP No.2

BRACING

TOP CHORD Structural wood sheathing directly applied or 2-4-4 oc purlins, except end verticals, and 2-0-0 oc purlins (5-0-0 max.): 6-8.
BOT CHORD Rigid ceiling directly applied or 2-2-0 oc bracing.
WEBS 1 Row at midpt 10-16, 31-32, 3-30, 10-34
JOINTS 1 Brace at Jt(s): 31, 32

REACTIONS (size) 12=0-5-8, 19=0-5-8, 30=0-5-8
Max Horiz 30=-169 (LC 19)
Max Uplift 12=-16 (LC 15), 30=-118 (LC 14)
Max Grav 12=1717 (LC 48), 19=2237 (LC 40), 30=2031 (LC 38)

FORCES (lb) - Maximum Compression/Maximum Tension

TOP CHORD 1-2=0/27, 2-3=-579/105, 3-5=-3462/206, 5-6=-1434/155, 6-7=-1310/153, 7-8=-671/152, 8-9=-806/157, 9-11=-3255/423, 11-12=-3475/99, 12-13=0/23, 2-30=-457/135
BOT CHORD 29-30=-222/2851, 27-29=-98/2698, 25-27=0/2786, 23-25=0/2786, 21-23=-1274/1066, 19-21=-1274/1066, 16-19=0/1560, 14-16=0/2563, 12-14=0/3064, 24-26=-601/46, 22-24=-536/1189, 20-22=-536/1189, 18-20=-159/3933, 17-18=-178/3773
WEBS 3-29=-65/197, 4-29=-34/392, 4-27=-717/205, 26-27=-32/786, 26-33=-13/984, 5-33=0/1296, 16-17=-33/777, 17-34=-318/172, 9-34=-928/117, 10-16=-711/257, 10-14=-33/681, 11-14=-374/171, 31-33=-186/1614, 31-32=-1323/26, 32-34=-3155/236, 3-30=-2867/73, 6-31=0/411, 8-32=-23/212, 7-32=-779/133, 7-31=-216/409, 9-32=-95/1328, 5-31=-2633/164, 18-19=-578/0, 17-19=-3299/377, 24-27=-322/669, 24-25=-54/35, 23-24=-754/149, 22-23=-339/0, 20-23=0/1891, 20-21=-39/41, 19-20=-1956/0, 4-33=-362/841, 10-34=-2498/179

NOTES

1) Unbalanced roof live loads have been considered for this design.
2) Wind: ASCE 7-16; Vult=130mph (3-second gust) Vasd=103mph; TCDL=6.0psf; BCDL=6.0psf; h=25ft; Cat. II; Exp B; Enclosed; MWFRS (envelope) exterior zone and C-C Exterior(2E) -0-10-8 to 3-9-0, Interior (1) 3-9-0 to 12-5-8, Exterior(2R) 12-5-8 to 32-6-13, Interior (1) 32-6-13 to 42-7-0, Exterior(2E) 42-7-0 to 47-2-8 zone; cantilever left and right exposed ; end vertical left and right exposed;C-C for members and forces & MWFRS for reactions shown; Lumber DOL=1.60 plate grip DOL=1.60
3) TCLL: ASCE 7-16; Pr=20.0 psf (roof LL: Lum DOL=1.15 Plate DOL=1.15); Pf=20.0 psf (Lum DOL=1.15 Plate DOL=1.15); Is=1.0; Rough Cat B; Fully Exp.; Ce=0.9; Cs=1.00; Ct=1.10
4) Unbalanced snow loads have been considered for this design.
5) This truss has been designed for greater of min roof live load of 12.0 psf or 1.00 times flat roof load of 20.0 psf on overhangs non-concurrent with other live loads.
6) Provide adequate drainage to prevent water ponding.
7) All plates are MT20 plates unless otherwise indicated.
8) This truss has been designed for a 10.0 psf bottom chord live load nonconcurrent with any other live loads.
9) * This truss has been designed for a live load of 20.0psf on the bottom chord in all areas where a rectangle 3-06-00 tall by 2-00-00 wide will fit between the bottom chord and any other members, with BCDL = 10.0psf.
10) Ceiling dead load (5.0 psf) on member(s). 31-33, 31-32, 32-34; Wall dead load (5.0psf) on member(s).26-33, 17-34
11) Bottom chord live load (40.0 psf) and additional bottom chord dead load (5.0 psf) applied only to room. 24-26, 22-24, 20-22, 18-20, 17-18
12) One H2.5A Simpson Strong-Tie connectors recommended to connect truss to bearing walls due to UPLIFT at jt(s) 30 and 12. This connection is for uplift only and does not consider lateral forces.
13) This truss is designed in accordance with the 2018 International Residential Code sections R502.11.1 and R802.10.2 and referenced standard ANSI/TPI 1.

June 16,2025

Continued on page 2

WARNING - Verify design parameters and READ NOTES ON THIS AND INCLUDED MITEK REFERENCE PAGE MII-7473 rev. 1/2/2023 BEFORE USE.
Design valid for use only with MiTek® connectors. This design is based only upon parameters shown, and is for an individual building component, not a truss system. Before use, the building designer must verify the applicability of design parameters and properly incorporate this design into the overall building design. Bracing indicated is to prevent buckling of individual truss web and/or chord members only. Additional temporary and permanent bracing is always required for stability and to prevent collapse with possible personal injury and property damage. For general guidance regarding the fabrication, storage, delivery, erection and bracing of trusses and truss systems, see **ANSI/TPI1 Quality Criteria and DSB-22** available from Truss Plate Institute (www.tpinst.org) and **BCSI Building Component Safety Information** available from the Structural Building Component Association (www.sbcacomponents.com)

ENGINEERING BY TRENCO A MiTek Affiliate
818 Soundside Road
Edenton, NC 27932

14) Graphical purlin representation does not depict the size or the orientation of the purlin along the top and/or bottom chord.
15) Attic room checked for L/360 deflection.

LOAD CASE(S) Standard

NORTH CAROLINA PROFESSIONAL SEAL 036322 ENGINEER ERIC A. GILBERT

June 16,2025

WARNING - Verify design parameters and READ NOTES ON THIS AND INCLUDED MITEK REFERENCE PAGE MII-7473 rev. 1/2/2023 BEFORE USE.
Design valid for use only with MiTek® connectors. This design is based only upon parameters shown, and is for an individual building component, not a truss system. Before use, the building designer must verify the applicability of design parameters and properly incorporate this design into the overall building design. Bracing indicated is to prevent buckling of individual truss web and/or chord members only. Additional temporary and permanent bracing is always required for stability and to prevent collapse with possible personal injury and property damage. For general guidance regarding the fabrication, storage, delivery, erection and bracing of trusses and truss systems, see **ANSI/TPI1 Quality Criteria and DSB-22** available from Truss Plate Institute (www.tpinst.org) and **BCSI Building Component Safety Information** available from the Structural Building Component Association (www.sbcacomponents.com)

ENGINEERING BY TRENCO A MiTek Affiliate
818 Soundside Road
Edenton, NC 27932

Job	Truss	Truss Type	Qty	Ply	926 Serenity-Roof-329 A CP GLH
25060033-01	B01	Common Supported Gable	1	1	I74200570 Job Reference (optional)

Carter Components (Sanford, NC), Sanford, NC - 27332, Run: 8.73 S Feb 19 2025 Print: 8.730 S Feb 19 2025 MiTek Industries, Inc. Fri Jun 13 10:53:29 Page: 1
ID:FNWJPV9PY63BhDnj6k2w3GyiMH5-RfC?PsB70Hq3NSgPqnL8w3uITXbGKWrCDoi7J4zJC?f

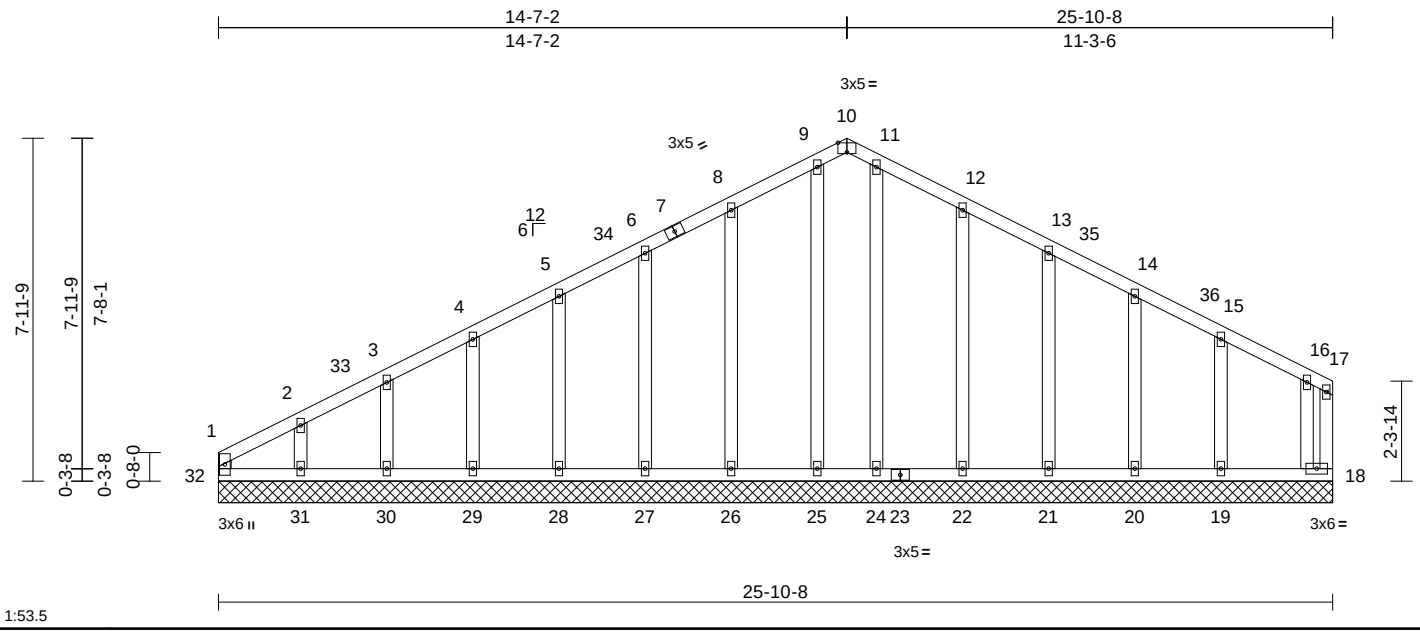

Scale = 1:53.5

Plate Offsets (X, Y): [10:0-2-8,Edge]

Loading	(psf)	Spacing	1-11-4	CSI		DEFL	in	(loc)	l/defl	L/d	PLATES	GRIP
TCLL (roof)	20.0	Plate Grip DOL	1.15	TC	0.12	Vert(LL)	n/a	-	n/a	999	MT20	244/190
Snow (Pf)	20.0	Lumber DOL	1.15	BC	0.06	Vert(TL)	n/a	-	n/a	999		
TCDL	10.0	Rep Stress Incr	YES	WB	0.15	Horiz(TL)	0.00	18	n/a	n/a		
BCLL	0.0*	Code	IRC2018/TPI2014	Matrix-MR								
BCDL	10.0										Weight: 168 lb	FT = 20%

LUMBER

TOP CHORD 2x4 SP No.2
BOT CHORD 2x4 SP No.2
WEBS 2x4 SP No.3
OTHERS 2x4 SP No.3

BRACING

TOP CHORD Structural wood sheathing directly applied or 6-0-0 oc purlins, except end verticals.
BOT CHORD Rigid ceiling directly applied or 10-0-0 oc bracing.

REACTIONS (size) 18=25-10-8, 19=25-10-8, 20=25-10-8, 21=25-10-8, 22=25-10-8, 24=25-10-8, 25=25-10-8, 26=25-10-8, 27=25-10-8, 28=25-10-8, 29=25-10-8, 30=25-10-8, 31=25-10-8, 32=25-10-8
Max Horiz 32=144 (LC 14)
Max Uplift 18=-9 (LC 14), 19=-69 (LC 15), 20=-35 (LC 15), 21=-42 (LC 15), 22=-57 (LC 15), 26=-52 (LC 14), 27=-41 (LC 14), 28=-42 (LC 14), 29=-45 (LC 14), 30=-30 (LC 14), 31=-96 (LC 14), 32=-35 (LC 15)
Max Grav 18=107 (LC 1), 19=176 (LC 36), 20=150 (LC 21), 21=209 (LC 21), 22=237 (LC 21), 24=166 (LC 21), 25=170 (LC 20), 26=237 (LC 20), 27=207 (LC 20), 28=156 (LC 20), 29=155 (LC 35), 30=155 (LC 1), 31=160 (LC 35), 32=114 (LC 31)

FORCES (lb) - Maximum Compression/Maximum Tension

TOP CHORD 1-32=-85/37, 1-2=-154/79, 2-3=-109/85, 3-4=-89/106, 4-5=-70/129, 5-6=-71/155, 6-8=-82/198, 8-9=-98/249, 9-10=-87/220, 10-11=-87/220, 11-12=-98/249, 12-13=-82/198, 13-14=-71/154, 14-15=-61/114, 15-16=-44/44, 16-17=-6/15, 17-18=-14/41
BOT CHORD 31-32=-5/20, 30-31=-5/20, 29-30=-5/20, 28-29=-5/20, 27-28=-5/20, 26-27=-5/20, 25-26=-5/20, 24-25=-5/20, 22-24=-5/20, 21-22=-5/20, 20-21=-5/20, 19-20=-5/20, 18-19=-5/20
WEBS 9-25=-138/1, 11-24=-135/1, 8-26=-196/94, 6-27=-169/72, 5-28=-123/75, 4-29=-123/74, 3-30=-122/79, 2-31=-126/130, 12-22=-197/94, 13-21=-170/74, 14-20=-119/67, 15-19=-136/134, 16-18=-85/34

NOTES

1) Unbalanced roof live loads have been considered for this design.
2) Wind: ASCE 7-16; Vult=130mph (3-second gust) Vasd=103mph; TCDL=6.0psf; BCDL=6.0psf; h=25ft; Cat. II; Exp B; Enclosed; MWFRS (envelope) exterior zone and C-C Corner(3E) 0-1-12 to 3-1-12, Exterior(2N) 3-1-12 to 11-7-2, Corner(3R) 11-7-2 to 17-7-2, Exterior (2N) 17-7-2 to 22-8-12, Corner(3E) 22-8-12 to 25-8-12 zone;C-C for members and forces & MWFRS for reactions shown; Lumber DOL=1.60 plate grip DOL=1.60
3) Truss designed for wind loads in the plane of the truss only. For studs exposed to wind (normal to the face), see Standard Industry Gable End Details as applicable, or consult qualified building designer as per ANSI/TPI 1.
4) TCLL: ASCE 7-16; Pr=20.0 psf (roof LL: Lum DOL=1.15 Plate DOL=1.15); Pf=20.0 psf (Lum DOL=1.15 Plate DOL=1.15); Is=1.0; Rough Cat B; Fully Exp.; Ce=0.9; Cs=1.00; Ct=1.10
5) Unbalanced snow loads have been considered for this design.
6) All plates are 2x4 MT20 unless otherwise indicated.
7) Gable requires continuous bottom chord bearing.
8) Truss to be fully sheathed from one face or securely braced against lateral movement (i.e. diagonal web).
9) Gable studs spaced at 2-0-0 oc.
10) This truss has been designed for a 10.0 psf bottom chord live load nonconcurrent with any other live loads.
11) * This truss has been designed for a live load of 20.0psf on the bottom chord in all areas where a rectangle 3-06-00 tall by 2-00-00 wide will fit between the bottom chord and any other members.
12) N/A
13) This truss is designed in accordance with the 2018 International Residential Code sections R502.11.1 and R802.10.2 and referenced standard ANSI/TPI 1.

LOAD CASE(S) Standard

June 16,2025

WARNING - Verify design parameters and READ NOTES ON THIS AND INCLUDED MITEK REFERENCE PAGE MII-7473 rev. 1/2/2023 BEFORE USE.
Design valid for use only with MiTek® connectors. This design is based only upon parameters shown, and is for an individual building component, not a truss system. Before use, the building designer must verify the applicability of design parameters and properly incorporate this design into the overall building design. Bracing indicated is to prevent buckling of individual truss web and/or chord members only. Additional temporary and permanent bracing is always required for stability and to prevent collapse with possible personal injury and property damage. For general guidance regarding the fabrication, storage, delivery, erection and bracing of trusses and truss systems, see **ANSI/TPI1 Quality Criteria and DSB-22** available from Truss Plate Institute (www.tpinst.org) and **BCSI Building Component Safety Information** available from the Structural Building Component Association (www.sbcacomponents.com)

ENGINEERING BY TRENCO A MiTek Affiliate
818 Soundside Road
Edenton, NC 27932

Job	Truss	Truss Type	Qty	Ply	926 Serenity-Roof-329 A CP GLH
25060033-01	B02	Common	8	1	I74200571 Job Reference (optional)

Carter Components (Sanford, NC), Sanford, NC - 27332, Run: 8.73 S Feb 19 2025 Print: 8.730 S Feb 19 2025 MiTek Industries, Inc. Fri Jun 13 10:53:29 Page: 1
ID:hkaQ_v4an9Q_6Fi1krtRK5yiMDK-RfC?PsB70Hq3NSgPqnL8w3uITXbGKWrCDoi7J4zJC?f

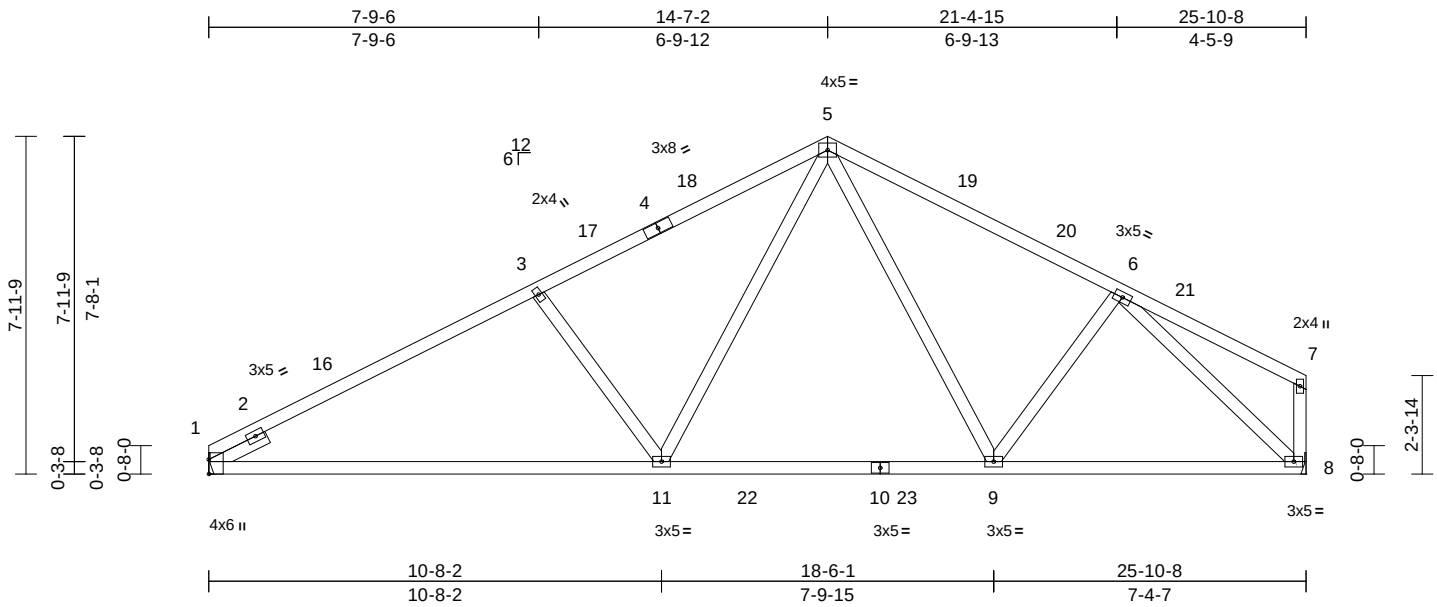

Scale = 1:54.3

Plate Offsets (X, Y): [1:0-4-1,Edge]

Loading	(psf)	Spacing	2-0-0	CSI		DEFL	in	(loc)	l/defl	L/d	PLATES	GRIP
TCLL (roof)	20.0	Plate Grip DOL	1.15	TC	0.99	Vert(LL)	-0.20	11-14	>999	240	MT20	244/190
Snow (Pf)	20.0	Lumber DOL	1.15	BC	0.74	Vert(CT)	-0.43	11-14	>726	180		
TCDL	10.0	Rep Stress Incr	YES	WB	0.98	Horz(CT)	0.04	8	n/a	n/a		
BCLL	0.0*	Code	IRC2018/TPI2014	Matrix-MSH								
BCDL	10.0										Weight: 135 lb	FT = 20%

LUMBER

TOP CHORD 2x4 SP No.2 *Except* 5-7:2x4 SP No.1
BOT CHORD 2x4 SP No.1 *Except* 10-8:2x4 SP No.2
WEBS 2x4 SP No.3
SLIDER Left 2x4 SP No.3 -- 1-6-0

BRACING

TOP CHORD Structural wood sheathing directly applied, except end verticals.
BOT CHORD Rigid ceiling directly applied or 10-0-0 oc bracing.

REACTIONS (size) 1= Mechanical, 8= Mechanical
Max Horiz 1=152 (LC 14)
Max Uplift 1=-105 (LC 14), 8=-83 (LC 15)
Max Grav 1=1144 (LC 5), 8=1134 (LC 6)

FORCES (lb) - Maximum Compression/Maximum Tension
TOP CHORD 1-3=-1927/253, 3-5=-1713/262, 5-6=-1415/237, 6-7=-90/66, 7-8=-110/35
BOT CHORD 1-11=-326/1668, 9-11=-66/1041, 8-9=-131/1095
WEBS 3-11=-496/235, 5-11=-96/816, 5-9=-55/279, 6-9=-52/221, 6-8=-1479/196

NOTES

1) Unbalanced roof live loads have been considered for this design.
2) Wind: ASCE 7-16; Vult=130mph (3-second gust) Vasd=103mph; TCDL=6.0psf; BCDL=6.0psf; h=25ft; Cat. II; Exp B; Enclosed; MWFRS (envelope) exterior zone and C-C Exterior(2E) 0-0-0 to 3-0-0, Interior (1) 3-0-0 to 11-7-2, Exterior(2R) 11-7-2 to 17-7-2, Interior (1) 17-7-2 to 22-8-12, Exterior(2E) 22-8-12 to 25-8-12 zone;C-C for members and forces & MWFRS for reactions shown; Lumber DOL=1.60 plate grip DOL=1.60
3) TCLL: ASCE 7-16; Pr=20.0 psf (roof LL: Lum DOL=1.15 Plate DOL=1.15); Pf=20.0 psf (Lum DOL=1.15 Plate DOL=1.15); Is=1.0; Rough Cat B; Fully Exp.; Ce=0.9; Cs=1.00; Ct=1.10
4) Unbalanced snow loads have been considered for this design.
5) This truss has been designed for a 10.0 psf bottom chord live load nonconcurrent with any other live loads.
6) * This truss has been designed for a live load of 20.0psf on the bottom chord in all areas where a rectangle 3-06-00 tall by 2-00-00 wide will fit between the bottom chord and any other members, with BCDL = 10.0psf.
7) Refer to girder(s) for truss to truss connections.
8) Provide mechanical connection (by others) of truss to bearing plate capable of withstanding 105 lb uplift at joint 1 and 83 lb uplift at joint 8.
9) This truss is designed in accordance with the 2018 International Residential Code sections R502.11.1 and R802.10.2 and referenced standard ANSI/TPI 1.

LOAD CASE(S) Standard

NORTH CAROLINA PROFESSIONAL SEAL 036322 ENGINEER ERIC A. GILBERT

June 16,2025

WARNING - Verify design parameters and READ NOTES ON THIS AND INCLUDED MITEK REFERENCE PAGE MII-7473 rev. 1/2/2023 BEFORE USE.
Design valid for use only with MiTek® connectors. This design is based only upon parameters shown, and is for an individual building component, not a truss system. Before use, the building designer must verify the applicability of design parameters and properly incorporate this design into the overall building design. Bracing indicated is to prevent buckling of individual truss web and/or chord members only. Additional temporary and permanent bracing is always required for stability and to prevent collapse with possible personal injury and property damage. For general guidance regarding the fabrication, storage, delivery, erection and bracing of trusses and truss systems, see **ANSI/TPI1 Quality Criteria and DSB-22** available from Truss Plate Institute (www.tpinst.org) and **BCSI Building Component Safety Information** available from the Structural Building Component Association (www.sbcacomponents.com)

ENGINEERING BY TRENCO A MiTek Affiliate
818 Soundside Road
Edenton, NC 27932

Job	Truss	Truss Type	Qty	Ply	926 Serenity-Roof-329 A CP GLH
25060033-01	B03	Common	1	1	I74200572 Job Reference (optional)

Carter Components (Sanford, NC), Sanford, NC - 27332, Run: 8.73 S Feb 19 2025 Print: 8.730 S Feb 19 2025 MiTek Industries, Inc. Fri Jun 13 10:53:29 Page: 1
ID:qTIoy7GVe?cqcW?KuvHXv5yiMxZ-RfC?PsB70Hq3NSgPqnL8w3uITXbGKWrCDoi7J4zJC?f

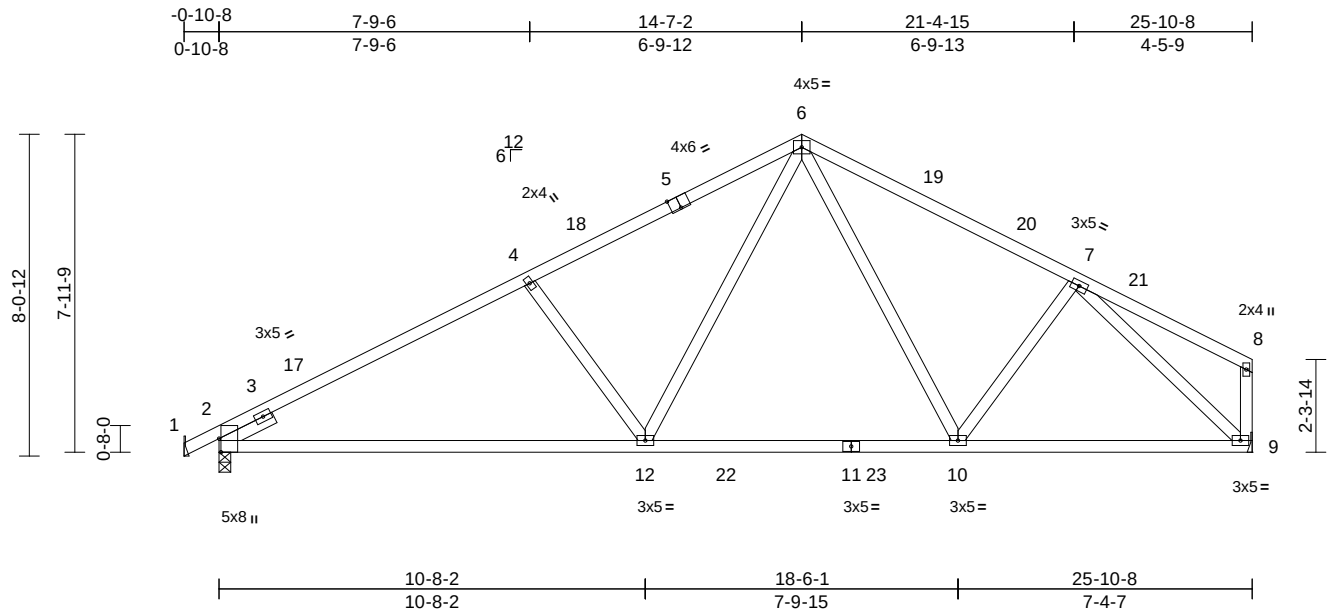

Scale = 1:57.7

Plate Offsets (X, Y): [2:0-4-1,Edge], [5:0-3-0,Edge]

Loading	(psf)	Spacing	2-0-0	CSI		DEFL	in	(loc)	l/defl	L/d	PLATES	GRIP
TCLL (roof)	20.0	Plate Grip DOL	1.15	TC	0.78	Vert(LL)	-0.16	12-15	>999	240	MT20	244/190
Snow (Pf)	20.0	Lumber DOL	1.15	BC	0.73	Vert(CT)	-0.34	12-15	>913	180		
TCDL	10.0	Rep Stress Incr	YES	WB	0.98	Horz(CT)	0.04	9	n/a	n/a		
BCLL	0.0*	Code	IRC2018/TPI2014	Matrix-MSH								
BCDL	10.0										Weight: 136 lb	FT = 20%

LUMBER
TOP CHORD 2x4 SP No.1
BOT CHORD 2x4 SP No.1 *Except* 11-9:2x4 SP No.2
WEBS 2x4 SP No.3
SLIDER Left 2x4 SP No.3 -- 1-6-0

BRACING
TOP CHORD Structural wood sheathing directly applied or 3-1-13 oc purlins, except end verticals.
BOT CHORD Rigid ceiling directly applied or 10-0-0 oc bracing.

REACTIONS (size) 1= Mechanical, 2=0-3-8, 9= Mechanical
Max Horiz 1=167 (LC 14)
Max Uplift 1=-292 (LC 7), 2=-180 (LC 14), 9=-85 (LC 15)
Max Grav 1=71 (LC 14), 2=1451 (LC 3), 9=1127 (LC 6)

FORCES (lb) - Maximum Compression/Maximum Tension
TOP CHORD 1-2=-180/192, 2-4=-1881/252, 4-6=-1670/261, 6-7=-1402/237, 7-8=-89/65, 8-9=-110/36
BOT CHORD 2-12=-247/1617, 10-12=-66/1026, 9-10=-131/1085
WEBS 4-12=-485/229, 6-12=-87/771, 6-10=-52/285, 7-10=-51/219, 7-9=-1467/196

NOTES
1) Unbalanced roof live loads have been considered for this design.
2) Wind: ASCE 7-16; Vult=130mph (3-second gust) Vasd=103mph; TCDL=6.0psf; BCDL=6.0psf; h=25ft; Cat. II; Exp B; Enclosed; MWFRS (envelope) exterior zone and C-C Exterior(2E) -0-9-12 to 2-2-4, Interior (1) 2-2-4 to 11-7-2, Exterior(2R) 11-7-2 to 17-7-2, Interior (1) 17-7-2 to 22-8-12, Exterior(2E) 22-8-12 to 25-8-12 zone; end vertical left exposed;C-C for members and forces & MWFRS for reactions shown; Lumber DOL=1.60 plate grip DOL=1.60
3) TCLL: ASCE 7-16; Pr=20.0 psf (roof LL: Lum DOL=1.15 Plate DOL=1.15); Pf=20.0 psf (Lum DOL=1.15 Plate DOL=1.15); Is=1.0; Rough Cat B; Fully Exp.; Ce=0.9; Cs=1.00; Ct=1.10
4) Unbalanced snow loads have been considered for this design.
5) This truss has been designed for a 10.0 psf bottom chord live load nonconcurrent with any other live loads.
6) * This truss has been designed for a live load of 20.0psf on the bottom chord in all areas where a rectangle 3-06-00 tall by 2-00-00 wide will fit between the bottom chord and any other members, with BCDL = 10.0psf.
7) Refer to girder(s) for truss to truss connections.
8) Provide mechanical connection (by others) of truss to bearing plate capable of withstanding 85 lb uplift at joint 9 and 292 lb uplift at joint 1.
9) One H2.5A Simpson Strong-Tie connectors recommended to connect truss to bearing walls due to UPLIFT at jt(s) 2. This connection is for uplift only and does not consider lateral forces.
10) This truss is designed in accordance with the 2018 International Residential Code sections R502.11.1 and R802.10.2 and referenced standard ANSI/TPI 1.

LOAD CASE(S) Standard

June 16,2025

WARNING - Verify design parameters and READ NOTES ON THIS AND INCLUDED MITEK REFERENCE PAGE MII-7473 rev. 1/2/2023 BEFORE USE.
Design valid for use only with MiTek® connectors. This design is based only upon parameters shown, and is for an individual building component, not a truss system. Before use, the building designer must verify the applicability of design parameters and properly incorporate this design into the overall building design. Bracing indicated is to prevent buckling of individual truss web and/or chord members only. Additional temporary and permanent bracing is always required for stability and to prevent collapse with possible personal injury and property damage. For general guidance regarding the fabrication, storage, delivery, erection and bracing of trusses and truss systems, see **ANSI/TPI1 Quality Criteria and DSB-22** available from Truss Plate Institute (www.tpinst.org) and **BCSI Building Component Safety Information** available from the Structural Building Component Association (www.sbcacomponents.com)

ENGINEERING BY TRENCO A MiTek Affiliate
818 Soundside Road
Edenton, NC 27932

Job	Truss	Truss Type	Qty	Ply	926 Serenity-Roof-329 A CP GLH
25060033-01	B04	Common	2	1	I74200573 Job Reference (optional)

Carter Components (Sanford, NC), Sanford, NC - 27332, Run: 8.73 S Feb 19 2025 Print: 8.730 S Feb 19 2025 MiTek Industries, Inc. Fri Jun 13 10:53:29 Page: 1
ID:k5WnkA1pKwccVpv24eS10Pyiddc-RfC?PsB70Hq3NSgPqnL8w3uITXbGKWrCDoi7J4zJC?f

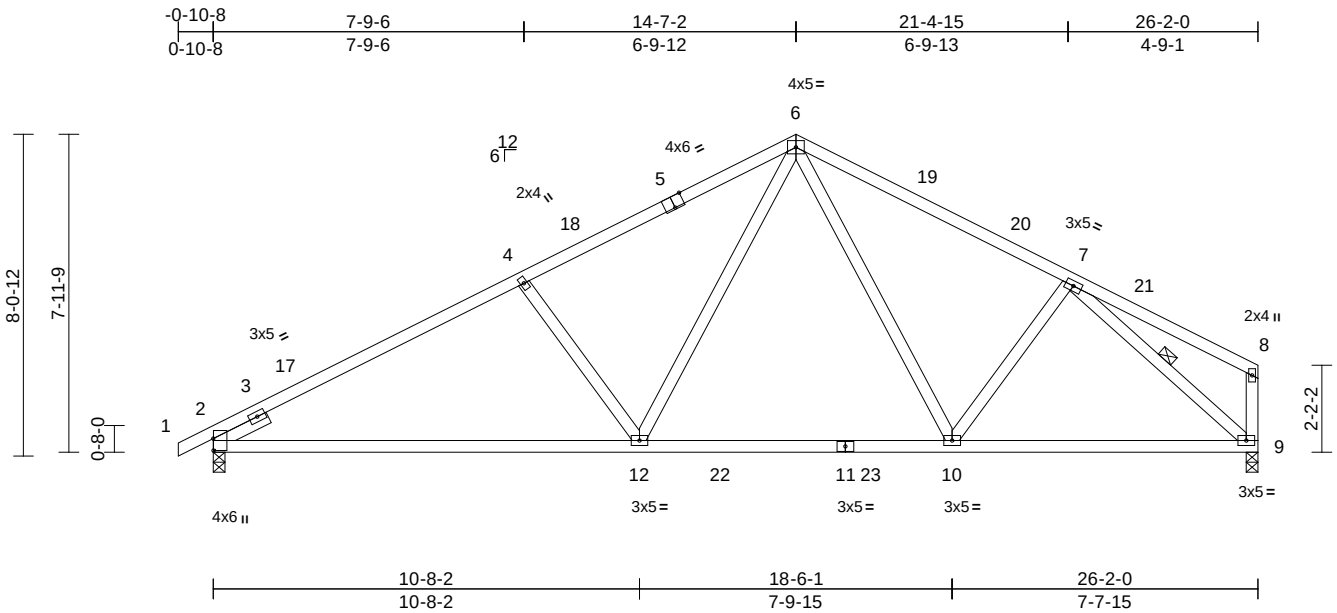

Scale = 1:57.7

Plate Offsets (X, Y): [2:0-3-9,0-0-1], [5:0-3-0,Edge]

Loading	(psf)	Spacing	2-0-0	CSI		DEFL	in	(loc)	l/defl	L/d	PLATES	GRIP
TCLL (roof)	20.0	Plate Grip DOL	1.15	TC	0.79	Vert(LL)	-0.20	12-15	>999	240	MT20	244/190
Snow (Pf)	20.0	Lumber DOL	1.15	BC	0.73	Vert(CT)	-0.41	12-15	>754	180		
TCDL	10.0	Rep Stress Incr	YES	WB	0.37	Horz(CT)	0.05	9	n/a	n/a		
BCLL	0.0*	Code	IRC2018/TPI2014	Matrix-MSH								
BCDL	10.0										Weight: 137 lb	FT = 20%

LUMBER
TOP CHORD 2x4 SP No.1
BOT CHORD 2x4 SP No.1 *Except* 11-9:2x4 SP No.2
WEBS 2x4 SP No.3
SLIDER Left 2x4 SP No.3 -- 1-6-0

BRACING
TOP CHORD Structural wood sheathing directly applied or 3-0-7 oc purlins, except end verticals.
BOT CHORD Rigid ceiling directly applied or 10-0-0 oc bracing.
WEBS 1 Row at midpt 7-9

REACTIONS (size) 2=0-3-8, 9=0-3-8
Max Horiz 2=162 (LC 14)
Max Uplift 2=-123 (LC 14), 9=-85 (LC 15)
Max Grav 2=1199 (LC 5), 9=1145 (LC 6)

FORCES (lb) - Maximum Compression/Maximum Tension
TOP CHORD 1-2=0/23, 2-4=-1953/251, 4-6=-1739/260, 6-7=-1469/241, 7-8=-110/56, 8-9=-130/43
BOT CHORD 2-12=-313/1689, 10-12=-63/1066, 9-10=-134/1166
WEBS 4-12=-494/234, 6-12=-96/809, 6-10=-58/319, 7-10=-86/188, 7-9=-1512/195

NOTES
1) Unbalanced roof live loads have been considered for this design.
2) Wind: ASCE 7-16; Vult=130mph (3-second gust) Vasd=103mph; TCDL=6.0psf; BCDL=6.0psf; h=25ft; Cat. II; Exp B; Enclosed; MWFRS (envelope) exterior zone and C-C Exterior(2E) -0-10-8 to 2-1-8, Interior (1) 2-1-8 to 11-7-2, Exterior(2R) 11-7-2 to 17-7-2, Interior (1) 17-7-2 to 23-0-4, Exterior(2E) 23-0-4 to 26-0-4 zone; end vertical left exposed;C-C for members and forces & MWFRS for reactions shown; Lumber DOL=1.60 plate grip DOL=1.60
3) TCLL: ASCE 7-16; Pr=20.0 psf (roof LL: Lum DOL=1.15 Plate DOL=1.15); Pf=20.0 psf (Lum DOL=1.15 Plate DOL=1.15); Is=1.0; Rough Cat B; Fully Exp.; Ce=0.9; Cs=1.00; Ct=1.10
4) Unbalanced snow loads have been considered for this design.
5) This truss has been designed for greater of min roof live load of 12.0 psf or 1.00 times flat roof load of 20.0 psf on overhangs non-concurrent with other live loads.
6) This truss has been designed for a 10.0 psf bottom chord live load nonconcurrent with any other live loads.
7) * This truss has been designed for a live load of 20.0psf on the bottom chord in all areas where a rectangle 3-06-00 tall by 2-00-00 wide will fit between the bottom chord and any other members, with BCDL = 10.0psf.
8) One H2.5A Simpson Strong-Tie connectors recommended to connect truss to bearing walls due to UPLIFT at jt(s) 2 and 9. This connection is for uplift only and does not consider lateral forces.
9) This truss is designed in accordance with the 2018 International Residential Code sections R502.11.1 and R802.10.2 and referenced standard ANSI/TPI 1.

LOAD CASE(S) Standard

June 16,2025

WARNING - Verify design parameters and READ NOTES ON THIS AND INCLUDED MITEK REFERENCE PAGE MII-7473 rev. 1/2/2023 BEFORE USE.
Design valid for use only with MiTek® connectors. This design is based only upon parameters shown, and is for an individual building component, not a truss system. Before use, the building designer must verify the applicability of design parameters and properly incorporate this design into the overall building design. Bracing indicated is to prevent buckling of individual truss web and/or chord members only. Additional temporary and permanent bracing is always required for stability and to prevent collapse with possible personal injury and property damage. For general guidance regarding the fabrication, storage, delivery, erection and bracing of trusses and truss systems, see **ANSI/TPI1 Quality Criteria and DSB-22** available from Truss Plate Institute (www.tpinst.org) and **BCSI Building Component Safety Information** available from the Structural Building Component Association (www.sbcacomponents.com)

ENGINEERING BY TRENCO A MiTek Affiliate
818 Soundside Road
Edenton, NC 27932

Job	Truss	Truss Type	Qty	Ply	926 Serenity-Roof-329 A CP GLH
25060033-01	B05	Common Supported Gable	1	1	I74200574 Job Reference (optional)

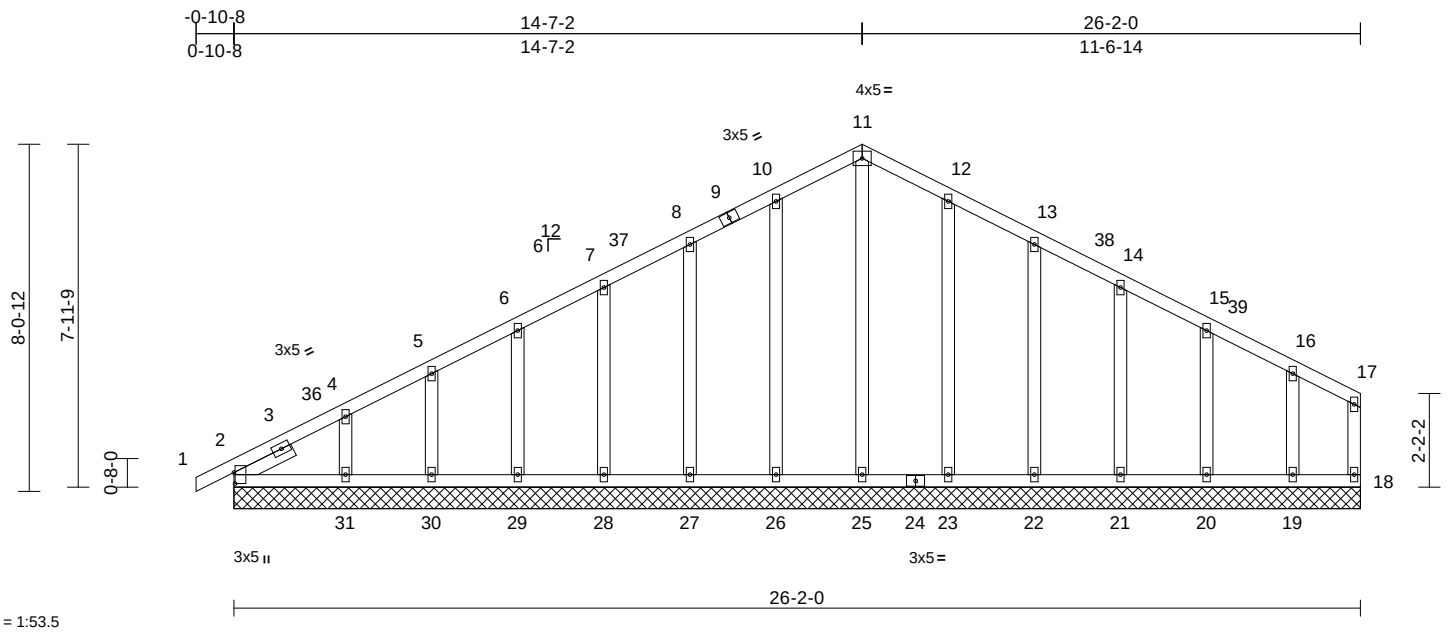

Scale = 1:53.5

Plate Offsets (X, Y): [2:0-3-1,0-0-5]

Loading	(psf)	Spacing	2-0-0	CSI		DEFL	in	(loc)	l/defl	L/d	PLATES	GRIP
TCLL (roof)	20.0	Plate Grip DOL	1.15	TC	0.08	Vert(LL)	n/a	-	n/a	999	MT20	244/190
Snow (Pf)	20.0	Lumber DOL	1.15	BC	0.04	Vert(CT)	n/a	-	n/a	999		
TCDL	10.0	Rep Stress Incr	YES	WB	0.18	Horz(CT)	0.00	2	n/a	n/a		
BCLL	0.0*	Code	IRC2018/TPI2014	Matrix-MSH								
BCDL	10.0										Weight: 168 lb	FT = 20%

LUMBER

TOP CHORD 2x4 SP No.2
BOT CHORD 2x4 SP No.2
WEBS 2x4 SP No.3
OTHERS 2x4 SP No.3
SLIDER Left 2x4 SP No.3 -- 1-6-0

BRACING

TOP CHORD Structural wood sheathing directly applied or 6-0-0 oc purlins, except end verticals.
BOT CHORD Rigid ceiling directly applied or 10-0-0 oc bracing.

REACTIONS (size) 2=26-2-0, 18=26-2-0, 19=26-2-0, 20=26-2-0, 21=26-2-0, 22=26-2-0, 23=26-2-0, 25=26-2-0, 26=26-2-0, 27=26-2-0, 28=26-2-0, 29=26-2-0, 30=26-2-0, 31=26-2-0
Max Horiz 2=162 (LC 14)
Max Uplift 2=-37 (LC 15), 19=-61 (LC 15), 20=-41 (LC 15), 21=-44 (LC 15), 22=-47 (LC 15), 23=-40 (LC 15), 26=-43 (LC 14), 27=-45 (LC 14), 28=-43 (LC 14), 29=-47 (LC 14), 30=-30 (LC 14), 31=-90 (LC 14)
Max Grav 2=151 (LC 1), 18=50 (LC 1), 19=145 (LC 37), 20=164 (LC 1), 21=174 (LC 22), 22=228 (LC 22), 23=245 (LC 22), 25=197 (LC 28), 26=245 (LC 21), 27=228 (LC 21), 28=174 (LC 21), 29=163 (LC 36), 30=147 (LC 21), 31=202 (LC 36)

FORCES (lb) - Maximum Compression/Maximum Tension

TOP CHORD 1-2=0/23, 2-4=-147/97, 4-5=-102/100, 5-6=-75/123, 6-7=-58/147, 7-8=-62/170, 8-10=-81/217, 10-11=-99/259, 11-12=-99/259, 12-13=-81/217, 13-14=-62/170, 14-15=-51/126, 15-16=-38/74, 16-17=-20/20, 17-18=-37/20
BOT CHORD 2-31=-1/10, 30-31=-1/10, 29-30=-1/10, 28-29=-1/10, 27-28=-1/10, 26-27=-1/10, 25-26=-1/10, 23-25=-1/10, 22-23=-1/10, 21-22=-1/10, 20-21=-1/10, 19-20=-1/10, 18-19=-1/10
WEBS 11-25=-165/28, 10-26=-205/71, 8-27=-188/81, 7-28=-135/76, 6-29=-128/79, 5-30=-118/68, 4-31=-154/112, 12-23=-205/71, 13-22=-188/82, 14-21=-135/74, 15-20=-129/92, 16-19=-117/123

NOTES

1) Unbalanced roof live loads have been considered for this design.
2) Wind: ASCE 7-16; Vult=130mph (3-second gust) Vasd=103mph; TCDL=6.0psf; BCDL=6.0psf; h=25ft; Cat. II; Exp B; Enclosed; MWFRS (envelope) exterior zone and C-C Corner(3E) -0-10-8 to 2-1-8, Exterior(2N) 2-1-8 to 11-7-2, Corner(3R) 11-7-2 to 17-7-2, Exterior(2N) 17-7-2 to 23-0-4, Corner(3E) 23-0-4 to 26-0-4 zone; end vertical left exposed;C-C for members and forces & MWFRS for reactions shown; Lumber DOL=1.60 plate grip DOL=1.60
3) Truss designed for wind loads in the plane of the truss only. For studs exposed to wind (normal to the face), see Standard Industry Gable End Details as applicable, or consult qualified building designer as per ANSI/TPI 1.
4) TCLL: ASCE 7-16; Pr=20.0 psf (roof LL: Lum DOL=1.15 Plate DOL=1.15); Pf=20.0 psf (Lum DOL=1.15 Plate DOL=1.15); Is=1.0; Rough Cat B; Fully Exp.; Ce=0.9; Cs=1.00; Ct=1.10
5) Unbalanced snow loads have been considered for this design.
6) This truss has been designed for greater of min roof live load of 12.0 psf or 1.00 times flat roof load of 20.0 psf on overhangs non-concurrent with other live loads.
7) All plates are 2x4 MT20 unless otherwise indicated.
8) Gable requires continuous bottom chord bearing.
9) Gable studs spaced at 2-0-0 oc.
10) This truss has been designed for a 10.0 psf bottom chord live load nonconcurrent with any other live loads.
11) * This truss has been designed for a live load of 20.0psf on the bottom chord in all areas where a rectangle 3-06-00 tall by 2-00-00 wide will fit between the bottom chord and any other members.
12) N/A
13) Beveled plate or shim required to provide full bearing surface with truss chord at joint(s) 2, 32.

June 16,2025

Continued on page 2

WARNING - Verify design parameters and READ NOTES ON THIS AND INCLUDED MITEK REFERENCE PAGE MII-7473 rev. 1/2/2023 BEFORE USE.
Design valid for use only with MiTek® connectors. This design is based only upon parameters shown, and is for an individual building component, not a truss system. Before use, the building designer must verify the applicability of design parameters and properly incorporate this design into the overall building design. Bracing indicated is to prevent buckling of individual truss web and/or chord members only. Additional temporary and permanent bracing is always required for stability and to prevent collapse with possible personal injury and property damage. For general guidance regarding the fabrication, storage, delivery, erection and bracing of trusses and truss systems, see **ANSI/TPI1 Quality Criteria and DSB-22** available from Truss Plate Institute (www.tpinst.org) and **BCSI Building Component Safety Information** available from the Structural Building Component Association (www.sbcacomponents.com)

ENGINEERING BY TRENCO A MiTek Affiliate
818 Soundside Road
Edenton, NC 27932

14) This truss is designed in accordance with the 2018 International Residential Code sections R502.11.1 and R802.10.2 and referenced standard ANSI/TPI 1.

LOAD CASE(S) Standard

June 16,2025

WARNING - Verify design parameters and READ NOTES ON THIS AND INCLUDED MITEK REFERENCE PAGE MII-7473 rev. 1/2/2023 BEFORE USE.
Design valid for use only with MiTek® connectors. This design is based only upon parameters shown, and is for an individual building component, not a truss system. Before use, the building designer must verify the applicability of design parameters and properly incorporate this design into the overall building design. Bracing indicated is to prevent buckling of individual truss web and/or chord members only. Additional temporary and permanent bracing is always required for stability and to prevent collapse with possible personal injury and property damage. For general guidance regarding the fabrication, storage, delivery, erection and bracing of trusses and truss systems, see **ANSI/TPI1 Quality Criteria and DSB-22** available from Truss Plate Institute (www.tpinst.org) and **BCSI Building Component Safety Information** available from the Structural Building Component Association (www.sbcacomponents.com)

ENGINEERING BY TRENCO A MiTek Affiliate
818 Soundside Road
Edenton, NC 27932

Job	Truss	Truss Type	Qty	Ply	926 Serenity-Roof-329 A CP GLH
25060033-01	C01	Common Supported Gable	1	1	I74200575 Job Reference (optional)

Carter Components (Sanford, NC), Sanford, NC - 27332,

Run: 8.73 S Feb 19 2025 Print: 8.730 S Feb 19 2025 MiTek Industries, Inc. Fri Jun 13 10:53:30 Page: 1
ID:HgQOZjQ?_97iryHX?XwsQlyidVM-RfC?PsB70Hq3NSgPqnL8w3uITXbGKWrCDoi7J4zJC?f

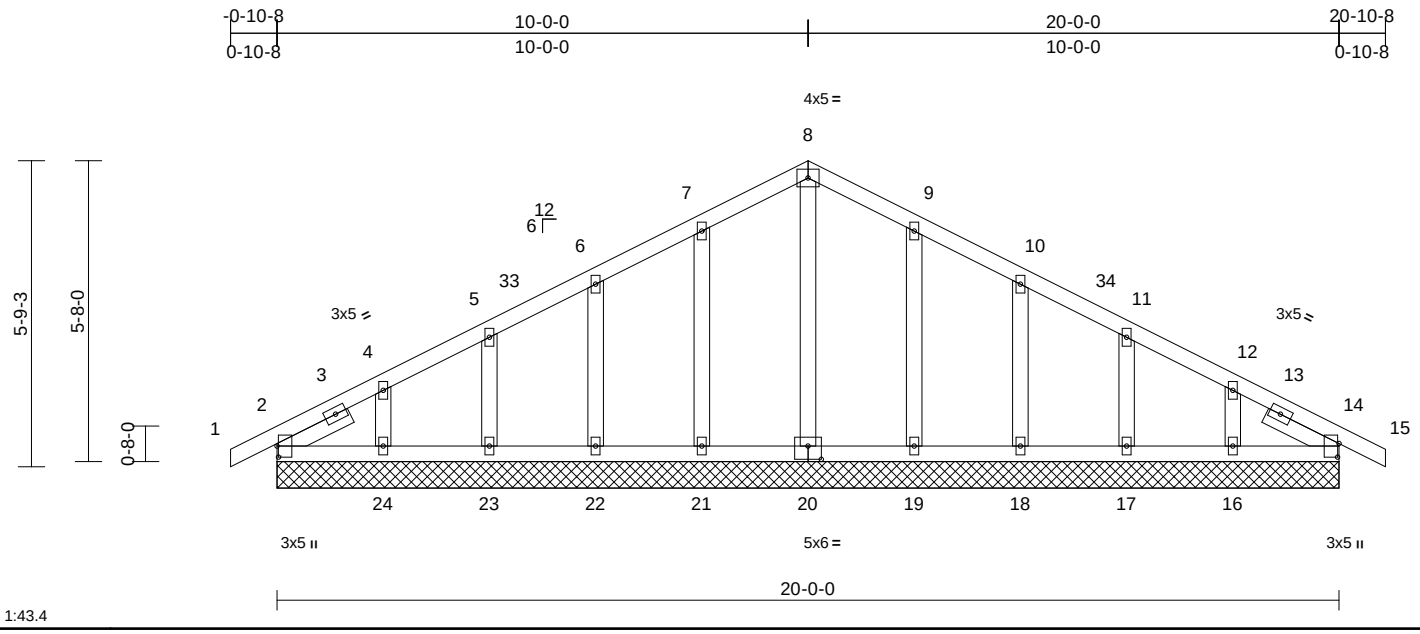

Scale = 1:43.4

Plate Offsets (X, Y): [2:0-2-8,0-0-5], [14:0-3-1,0-0-5], [20:0-3-0,0-3-0]

Loading	(psf)	Spacing	1-11-4	CSI		DEFL	in	(loc)	l/defl	L/d	PLATES	GRIP
TCLL (roof)	20.0	Plate Grip DOL	1.15	TC	0.07	Vert(LL)	n/a	-	n/a	999	MT20	244/190
Snow (Pf)	20.0	Lumber DOL	1.15	BC	0.03	Vert(CT)	n/a	-	n/a	999		
TCDL	10.0	Rep Stress Incr	YES	WB	0.08	Horz(CT)	0.00	14	n/a	n/a		
BCLL	0.0*	Code	IRC2018/TPI2014	Matrix-MSH								
BCDL	10.0										Weight: 109 lb	FT = 20%

LUMBER

TOP CHORD 2x4 SP No.2
BOT CHORD 2x4 SP No.2
OTHERS 2x4 SP No.3
SLIDER Left 2x4 SP No.3 -- 1-6-0, Right 2x4 SP No.3 -- 1-6-0

BRACING

TOP CHORD Structural wood sheathing directly applied or 6-0-0 oc purlins.
BOT CHORD Rigid ceiling directly applied or 10-0-0 oc bracing.

REACTIONS (size) 2=20-0-0, 14=20-0-0, 16=20-0-0, 17=20-0-0, 18=20-0-0, 19=20-0-0, 20=20-0-0, 21=20-0-0, 22=20-0-0, 23=20-0-0, 24=20-0-0
Max Horiz 2=-83 (LC 19)
Max Uplift 2=-15 (LC 15), 16=-60 (LC 15), 17=-39 (LC 15), 18=-44 (LC 15), 19=-43 (LC 15), 21=-44 (LC 14), 22=-44 (LC 14), 23=-37 (LC 14), 24=-67 (LC 14)
Max Grav 2=137 (LC 21), 14=137 (LC 22), 16=155 (LC 37), 17=169 (LC 22), 18=221 (LC 22), 19=237 (LC 22), 20=143 (LC 28), 21=237 (LC 21), 22=221 (LC 21), 23=169 (LC 21), 24=155 (LC 36)

FORCES (lb) - Maximum Compression/Maximum Tension
TOP CHORD 1-2=0/23, 2-4=-88/46, 4-5=-66/55, 5-6=-50/77, 6-7=-59/118, 7-8=-73/163, 8-9=-73/163, 9-10=-59/118, 10-11=-48/71, 11-12=-42/27, 12-14=-52/21, 14-15=0/23
BOT CHORD 2-24=-13/87, 23-24=-13/87, 22-23=-13/87, 21-22=-13/87, 19-21=-13/87, 18-19=-13/87, 17-18=-13/87, 16-17=-13/87, 14-16=-13/87
WEBS 8-20=-104/0, 7-21=-199/78, 6-22=-182/81, 5-23=-132/76, 4-24=-123/100, 9-19=-199/78, 10-18=-182/81, 11-17=-132/76, 12-16=-123/100

NOTES

1) Unbalanced roof live loads have been considered for this design.
2) Wind: ASCE 7-16; Vult=130mph (3-second gust) Vasd=103mph; TCDL=6.0psf; BCDL=6.0psf; h=25ft; Cat. II; Exp B; Enclosed; MWFRS (envelope) exterior zone and C-C Corner(3E) -0-10-8 to 2-0-0, Exterior(2N) 2-0-0 to 7-0-0, Corner(3R) 7-0-0 to 13-0-0, Exterior(2N) 13-0-0 to 17-10-8, Corner(3E) 17-10-8 to 20-10-8 zone; cantilever left and right exposed ; end vertical left and right exposed;C-C for members and forces & MWFRS for reactions shown; Lumber DOL=1.60 plate grip DOL=1.60
3) Truss designed for wind loads in the plane of the truss only. For studs exposed to wind (normal to the face), see Standard Industry Gable End Details as applicable, or consult qualified building designer as per ANSI/TPI 1.
4) TCLL: ASCE 7-16; Pr=20.0 psf (roof LL: Lum DOL=1.15 Plate DOL=1.15); Pf=20.0 psf (Lum DOL=1.15 Plate DOL=1.15); Is=1.0; Rough Cat B; Fully Exp.; Ce=0.9; Cs=1.00; Ct=1.10
5) Unbalanced snow loads have been considered for this design.
6) This truss has been designed for greater of min roof live load of 12.0 psf or 1.00 times flat roof load of 20.0 psf on overhangs non-concurrent with other live loads.
7) All plates are 2x4 MT20 unless otherwise indicated.
8) Gable requires continuous bottom chord bearing.
9) Gable studs spaced at 2-0-0 oc.
10) This truss has been designed for a 10.0 psf bottom chord live load nonconcurrent with any other live loads.
11) * This truss has been designed for a live load of 20.0psf on the bottom chord in all areas where a rectangle 3-06-00 tall by 2-00-00 wide will fit between the bottom chord and any other members.
12) Provide mechanical connection (by others) of truss to bearing plate capable of withstanding 15 lb uplift at joint 2, 44 lb uplift at joint 21, 44 lb uplift at joint 22, 37 lb uplift at joint 23, 67 lb uplift at joint 24, 43 lb uplift at joint 19, 44 lb uplift at joint 18, 39 lb uplift at joint 17, 60 lb uplift at joint 16 and 15 lb uplift at joint 2.
13) This truss is designed in accordance with the 2018 International Residential Code sections R502.11.1 and R802.10.2 and referenced standard ANSI/TPI 1.

LOAD CASE(S) Standard

June 16,2025

WARNING - Verify design parameters and READ NOTES ON THIS AND INCLUDED MITEK REFERENCE PAGE MII-7473 rev. 1/2/2023 BEFORE USE.
Design valid for use only with MiTek® connectors. This design is based only upon parameters shown, and is for an individual building component, not a truss system. Before use, the building designer must verify the applicability of design parameters and properly incorporate this design into the overall building design. Bracing indicated is to prevent buckling of individual truss web and/or chord members only. Additional temporary and permanent bracing is always required for stability and to prevent collapse with possible personal injury and property damage. For general guidance regarding the fabrication, storage, delivery, erection and bracing of trusses and truss systems, see **ANSI/TPI1 Quality Criteria and DSB-22** available from Truss Plate Institute (www.tpinst.org) and **BCSI Building Component Safety Information** available from the Structural Building Component Association (www.sbcacomponents.com)

ENGINEERING BY TRENCO A MiTek Affiliate
818 Soundside Road
Edenton, NC 27932

Job	Truss	Truss Type	Qty	Ply	926 Serenity-Roof-329 A CP GLH
25060033-01	C02	Common	9	1	I74200576 Job Reference (optional)

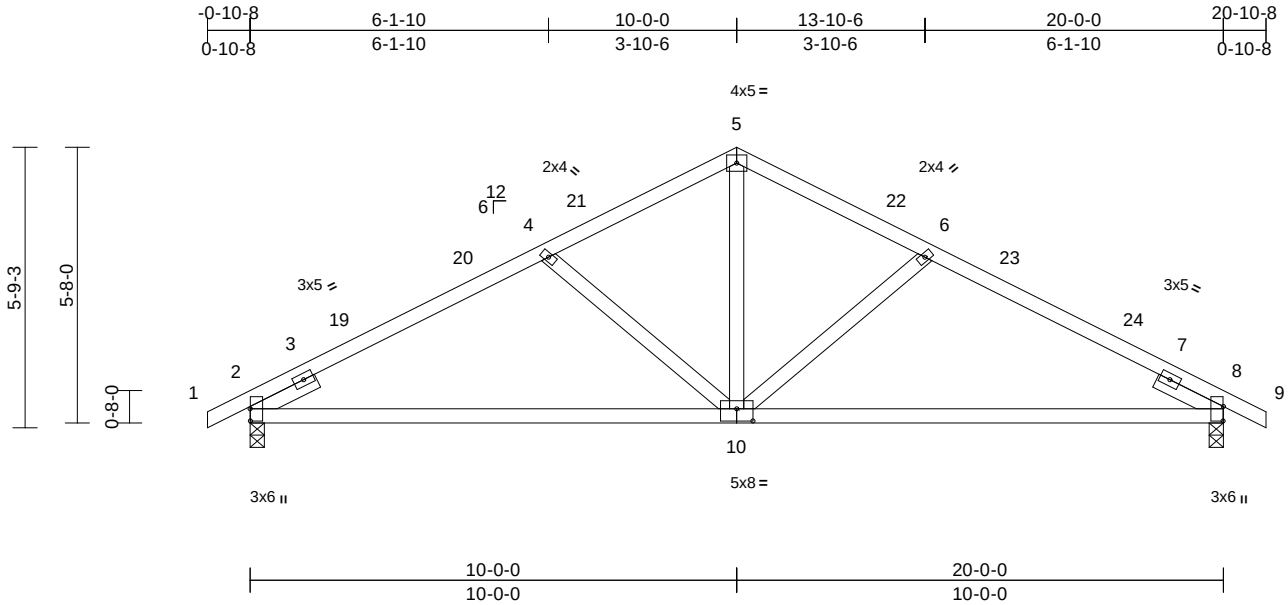

Scale = 1:47.3

Plate Offsets (X, Y): [2:0-3-0,0-0-1], [8:0-3-9,0-0-1], [10:0-4-0,0-3-0]

Loading	(psf)	Spacing	2-0-0	CSI		DEFL	in	(loc)	l/defl	L/d	PLATES	GRIP
TCLL (roof)	20.0	Plate Grip DOL	1.15	TC	0.35	Vert(LL)	-0.13	10-13	>999	240	MT20	244/190
Snow (Pf)	20.0	Lumber DOL	1.15	BC	0.85	Vert(CT)	-0.28	10-13	>861	180		
TCDL	10.0	Rep Stress Incr	YES	WB	0.24	Horz(CT)	0.03	8	n/a	n/a		
BCLL	0.0*	Code	IRC2018/TPI2014	Matrix-MSH								
BCDL	10.0										Weight: 93 lb	FT = 20%

LUMBER

TOP CHORD	2x4 SP No.2
BOT CHORD	2x4 SP No.2
WEBS	2x4 SP No.3
SLIDER	Left 2x4 SP No.3 -- 1-6-0, Right 2x4 SP No.3 -- 1-6-0

BRACING

TOP CHORD	Structural wood sheathing directly applied or 5-0-4 oc purlins.
BOT CHORD	Rigid ceiling directly applied or 10-0-0 oc bracing.

REACTIONS (size) 2=0-3-8, 8=0-3-8
Max Horiz 2=-86 (LC 19)
Max Uplift 2=-93 (LC 14), 8=-93 (LC 15)
Max Grav 2=903 (LC 21), 8=903 (LC 22)

FORCES (lb) - Maximum Compression/Maximum Tension

TOP CHORD	1-2=0/23, 2-4=-1287/259, 4-5=-970/219, 5-6=-970/219, 6-8=-1287/259, 8-9=0/23
BOT CHORD	2-8=-197/1099
WEBS	5-10=-81/616, 6-10=-418/167, 4-10=-418/167

NOTES

1) Unbalanced roof live loads have been considered for this design.
2) Wind: ASCE 7-16; Vult=130mph (3-second gust) Vasd=103mph; TCDL=6.0psf; BCDL=6.0psf; h=25ft; Cat. II; Exp B; Enclosed; MWFRS (envelope) exterior zone and C-C Exterior(2E) -0-10-8 to 2-1-8, Interior (1) 2-1-8 to 7-0-0, Exterior(2R) 7-0-0 to 13-0-0, Interior (1) 13-0-0 to 17-10-8, Exterior(2E) 17-10-8 to 20-10-8 zone; end vertical left and right exposed;C-C for members and forces & MWFRS for reactions shown; Lumber DOL=1.60 plate grip DOL=1.60
3) TCLL: ASCE 7-16; Pr=20.0 psf (roof LL: Lum DOL=1.15 Plate DOL=1.15); Pf=20.0 psf (Lum DOL=1.15 Plate DOL=1.15); Is=1.0; Rough Cat B; Fully Exp.; Ce=0.9; Cs=1.00; Ct=1.10
4) Unbalanced snow loads have been considered for this design.
5) This truss has been designed for greater of min roof live load of 12.0 psf or 1.00 times flat roof load of 20.0 psf on overhangs non-concurrent with other live loads.
6) This truss has been designed for a 10.0 psf bottom chord live load nonconcurrent with any other live loads.
7) * This truss has been designed for a live load of 20.0psf on the bottom chord in all areas where a rectangle 3-06-00 tall by 2-00-00 wide will fit between the bottom chord and any other members.
8) One H2.5A Simpson Strong-Tie connectors recommended to connect truss to bearing walls due to UPLIFT at jt(s) 2 and 8. This connection is for uplift only and does not consider lateral forces.
9) This truss is designed in accordance with the 2018 International Residential Code sections R502.11.1 and R802.10.2 and referenced standard ANSI/TPI 1.

LOAD CASE(S) Standard

June 16,2025

WARNING - Verify design parameters and READ NOTES ON THIS AND INCLUDED MITEK REFERENCE PAGE MII-7473 rev. 1/2/2023 BEFORE USE.
Design valid for use only with MiTek® connectors. This design is based only upon parameters shown, and is for an individual building component, not a truss system. Before use, the building designer must verify the applicability of design parameters and properly incorporate this design into the overall building design. Bracing indicated is to prevent buckling of individual truss web and/or chord members only. Additional temporary and permanent bracing is always required for stability and to prevent collapse with possible personal injury and property damage. For general guidance regarding the fabrication, storage, delivery, erection and bracing of trusses and truss systems, see **ANSI/TPI1 Quality Criteria and DSB-22** available from Truss Plate Institute (www.tpinst.org) and **BCSI Building Component Safety Information** available from the Structural Building Component Association (www.sbcacomponents.com)

ENGINEERING BY TRENCO A MiTek Affiliate
818 Soundside Road
Edenton, NC 27932

Job	Truss	Truss Type	Qty	Ply	926 Serenity-Roof-329 A CP GLH
25060033-01	C03	Common	2	1	I74200577 Job Reference (optional)

Carter Components (Sanford, NC), Sanford, NC - 27332, Run: 8.73 S Feb 19 2025 Print: 8.730 S Feb 19 2025 MiTek Industries, Inc. Fri Jun 13 10:53:30 Page: 1
ID:9d4dhesW3iCMikBVl9aq0ryidW5-RfC?PsB70Hq3NSgPqnL8w3uITXbGKWrCDoi7J4zJC?f

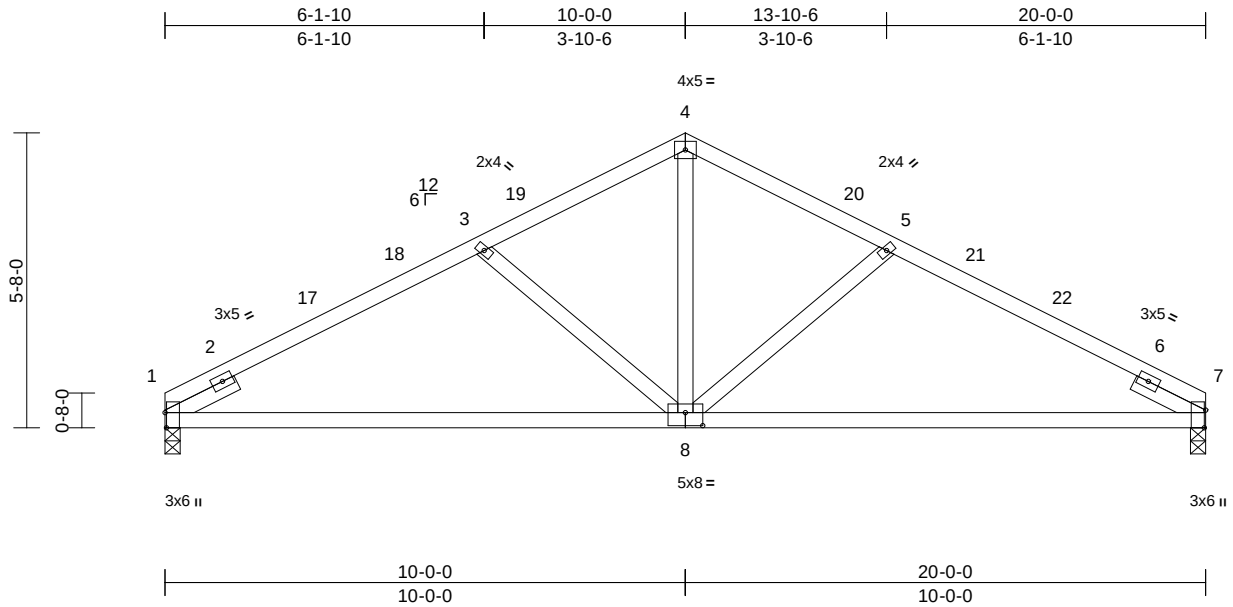

Scale = 1:44.3

Plate Offsets (X, Y): [1:0-3-8,Edge], [7:0-4-1,Edge], [8:0-4-0,0-3-0]

Loading	(psf)	Spacing	2-0-0	CSI		DEFL	in	(loc)	l/defl	L/d	PLATES	GRIP
TCLL (roof)	20.0	Plate Grip DOL	1.15	TC	0.36	Vert(LL)	-0.13	8-15	>999	240	MT20	244/190
Snow (Pf)	20.0	Lumber DOL	1.15	BC	0.86	Vert(CT)	-0.28	8-15	>857	180		
TCDL	10.0	Rep Stress Incr	YES	WB	0.25	Horz(CT)	0.02	7	n/a	n/a		
BCLL	0.0*	Code	IRC2018/TPI2014	Matrix-MSH								
BCDL	10.0										Weight: 90 lb	FT = 20%

LUMBER
TOP CHORD 2x4 SP No.2
BOT CHORD 2x4 SP No.2
WEBS 2x4 SP No.3
SLIDER Left 2x4 SP No.3 -- 1-6-0, Right 2x4 SP No.3 -- 1-6-0

BRACING
TOP CHORD Structural wood sheathing directly applied or 4-11-14 oc purlins.
BOT CHORD Rigid ceiling directly applied or 10-0-0 oc bracing.

REACTIONS (size) 1=0-3-8, 7=0-3-8
Max Horiz 1=-79 (LC 15)
Max Uplift 1=-76 (LC 14), 7=-76 (LC 15)
Max Grav 1=850 (LC 20), 7=850 (LC 21)

FORCES (lb) - Maximum Compression/Maximum Tension
TOP CHORD 1-3=-1243/267, 3-4=-975/226, 4-5=-975/226, 5-7=-1243/267
BOT CHORD 1-7=-209/1105
WEBS 4-8=-89/621, 5-8=-422/168, 3-8=-422/168

NOTES
1) Unbalanced roof live loads have been considered for this design.
2) Wind: ASCE 7-16; Vult=130mph (3-second gust) Vasd=103mph; TCDL=6.0psf; BCDL=6.0psf; h=25ft; Cat. II; Exp B; Enclosed; MWFRS (envelope) exterior zone and C-C Exterior(2E) 0-0-0 to 3-0-0, Interior (1) 3-0-0 to 7-0-0, Exterior(2R) 7-0-0 to 13-0-0, Interior (1) 13-0-0 to 17-0-0, Exterior(2E) 17-0-0 to 20-0-0 zone; end vertical left and right exposed;C-C for members and forces & MWFRS for reactions shown; Lumber DOL=1.60 plate grip DOL=1.60
3) TCLL: ASCE 7-16; Pr=20.0 psf (roof LL: Lum DOL=1.15 Plate DOL=1.15); Pf=20.0 psf (Lum DOL=1.15 Plate DOL=1.15); Is=1.0; Rough Cat B; Fully Exp.; Ce=0.9; Cs=1.00; Ct=1.10
4) Unbalanced snow loads have been considered for this design.
5) This truss has been designed for a 10.0 psf bottom chord live load nonconcurrent with any other live loads.
6) * This truss has been designed for a live load of 20.0psf on the bottom chord in all areas where a rectangle 3-06-00 tall by 2-00-00 wide will fit between the bottom chord and any other members.
7) One H2.5A Simpson Strong-Tie connectors recommended to connect truss to bearing walls due to UPLIFT at jt(s) 1 and 7. This connection is for uplift only and does not consider lateral forces.
8) This truss is designed in accordance with the 2018 International Residential Code sections R502.11.1 and R802.10.2 and referenced standard ANSI/TPI 1.

LOAD CASE(S) Standard

June 16,2025

WARNING - Verify design parameters and READ NOTES ON THIS AND INCLUDED MITEK REFERENCE PAGE MII-7473 rev. 1/2/2023 BEFORE USE.
Design valid for use only with MiTek® connectors. This design is based only upon parameters shown, and is for an individual building component, not a truss system. Before use, the building designer must verify the applicability of design parameters and properly incorporate this design into the overall building design. Bracing indicated is to prevent buckling of individual truss web and/or chord members only. Additional temporary and permanent bracing is always required for stability and to prevent collapse with possible personal injury and property damage. For general guidance regarding the fabrication, storage, delivery, erection and bracing of trusses and truss systems, see **ANSI/TPI1 Quality Criteria and DSB-22** available from Truss Plate Institute (www.tpinst.org) and **BCSI Building Component Safety Information** available from the Structural Building Component Association (www.sbcacomponents.com)

ENGINEERING BY TRENCO A MiTek Affiliate
818 Soundside Road
Edenton, NC 27932

Job	Truss	Truss Type	Qty	Ply	926 Serenity-Roof-329 A CP GLH
25060033-01	C04	Common Girder	1	**2**	I74200578 Job Reference (optional)

Carter Components (Sanford, NC), Sanford, NC - 27332, Run: 8.73 S Feb 19 2025 Print: 8.730 S Feb 19 2025 MiTek Industries, Inc. Fri Jun 13 10:53:30 Page: 1
ID:pZm2gFLO1_c4sbz_J6gZukyi2?I-RfC?PsB70Hq3NSgPqnL8w3uITXbGKWrCDoi7J4zJC?f

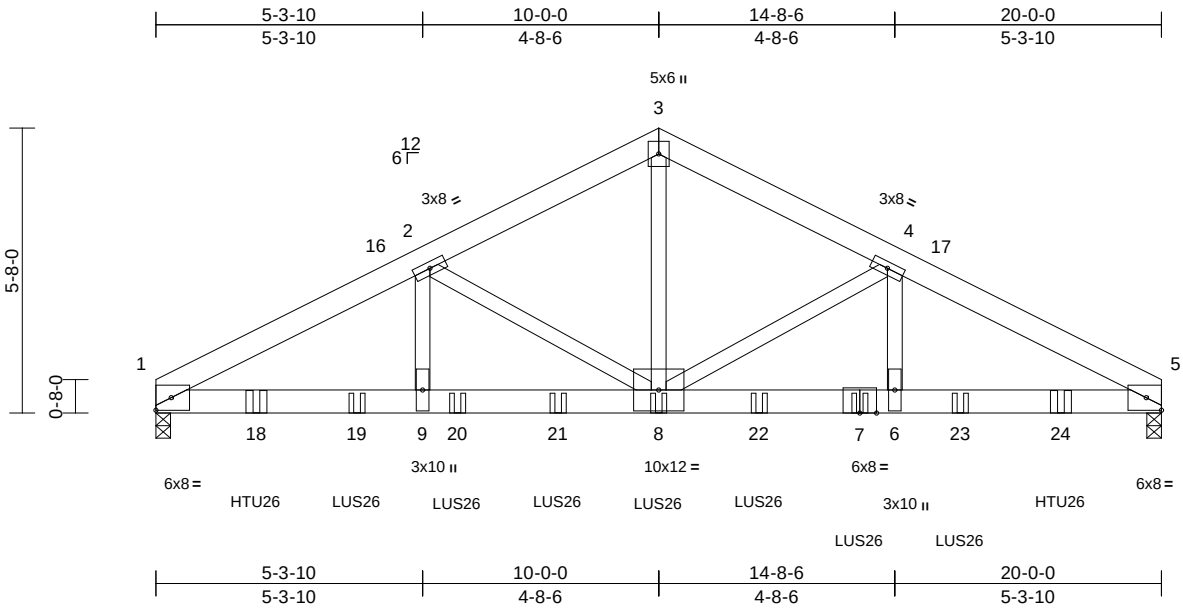

Scale = 1:45.8

Loading	(psf)	Spacing	2-0-0	CSI		DEFL	in	(loc)	l/defl	L/d	PLATES	GRIP
TCLL (roof)	20.0	Plate Grip DOL	1.15	TC	0.32	Vert(LL)	-0.11	6-8	>999	240	MT20	244/190
Snow (Pf)	20.0	Lumber DOL	1.15	BC	0.47	Vert(CT)	-0.20	6-8	>999	180		
TCDL	10.0	Rep Stress Incr	NO	WB	0.72	Horz(CT)	0.06	5	n/a	n/a		
BCLL	0.0*	Code	IRC2018/TPI2014	Matrix-MSH								
BCDL	10.0										Weight: 258 lb	FT = 20%

LUMBER
TOP CHORD 2x6 SP No.2
BOT CHORD 2x6 SP 2400F 2.0E
WEBS 2x4 SP No.3 *Except* 8-3:2x4 SP No.2

BRACING
TOP CHORD Structural wood sheathing directly applied or 4-9-3 oc purlins.
BOT CHORD Rigid ceiling directly applied or 10-0-0 oc bracing.

REACTIONS (size) 1=0-3-8, 5=0-3-8
Max Horiz 1=-79 (LC 38)
Max Uplift 1=-502 (LC 12), 5=-504 (LC 13)
Max Grav 1=5749 (LC 5), 5=5744 (LC 6)

FORCES (lb) - Maximum Compression/Maximum Tension
TOP CHORD 1-2=-9893/866, 2-3=-7052/647, 3-4=-7052/648, 4-5=-9890/868
BOT CHORD 1-9=-791/8798, 8-9=-791/8798, 6-8=-713/8795, 5-6=-713/8795
WEBS 3-8=-480/5885, 4-8=-2939/352, 4-6=-163/2578, 2-8=-2942/350, 2-9=-162/2580

NOTES
1) 2-ply truss to be connected together with 10d (0.131"x3") nails as follows:
Top chords connected as follows: 2x6 - 2 rows staggered at 0-9-0 oc.
Bottom chords connected as follows: 2x6 - 2 rows staggered at 0-7-0 oc.
Web connected as follows: 2x4 - 1 row at 0-9-0 oc.
2) All loads are considered equally applied to all plies, except if noted as front (F) or back (B) face in the LOAD CASE(S) section. Ply to ply connections have been provided to distribute only loads noted as (F) or (B), unless otherwise indicated.
3) Unbalanced roof live loads have been considered for this design.
4) Wind: ASCE 7-16; Vult=130mph (3-second gust) Vasd=103mph; TCDL=6.0psf; BCDL=6.0psf; h=25ft; Cat. II; Exp B; Enclosed; MWFRS (envelope) exterior zone; cantilever left and right exposed ; end vertical left and right exposed; Lumber DOL=1.60 plate grip DOL=1.60
5) TCLL: ASCE 7-16; Pr=20.0 psf (roof LL: Lum DOL=1.15 Plate DOL=1.15); Pf=20.0 psf (Lum DOL=1.15 Plate DOL=1.15); Is=1.0; Rough Cat B; Fully Exp.; Ce=0.9; Cs=1.00; Ct=1.10
6) Unbalanced snow loads have been considered for this design.
7) This truss has been designed for a 10.0 psf bottom chord live load nonconcurrent with any other live loads.
8) * This truss has been designed for a live load of 20.0psf on the bottom chord in all areas where a rectangle 3-06-00 tall by 2-00-00 wide will fit between the bottom chord and any other members.
9) One H2.5A Simpson Strong-Tie connectors recommended to connect truss to bearing walls due to UPLIFT at jt(s) 1 and 5. This connection is for uplift only and does not consider lateral forces.
10) This truss is designed in accordance with the 2018 International Residential Code sections R502.11.1 and R802.10.2 and referenced standard ANSI/TPI 1.
11) Use Simpson Strong-Tie HTU26 (20-10d Girder, 20-10dx1 1/2 Truss, Single Ply Girder) or equivalent spaced at 16-0-0 oc max. starting at 2-0-0 from the left end to 18-0-0 to connect truss(es) to back face of bottom chord.
12) Use Simpson Strong-Tie LUS26 (4-SD9112 Girder, 4-SD9212 Truss, Single Ply Girder) or equivalent spaced at 2-0-0 oc max. starting at 4-0-0 from the left end to 16-0-0 to connect truss(es) to back face of bottom chord.
13) Fill all nail holes where hanger is in contact with lumber.

LOAD CASE(S) Standard
1) Dead + Snow (balanced): Lumber Increase=1.15, Plate Increase=1.15

Uniform Loads (lb/ft)
Vert: 1-3=-60, 3-5=-60, 10-13=-20
Concentrated Loads (lb)
Vert: 7=-1020 (B), 8=-1020 (B), 18=-1020 (B), 19=-1020 (B), 20=-1020 (B), 21=-1020 (B), 22=-1020 (B), 23=-1020 (B), 24=-1016 (B)

June 16,2025

WARNING - Verify design parameters and READ NOTES ON THIS AND INCLUDED MITEK REFERENCE PAGE MII-7473 rev. 1/2/2023 BEFORE USE.
Design valid for use only with MiTek® connectors. This design is based only upon parameters shown, and is for an individual building component, not a truss system. Before use, the building designer must verify the applicability of design parameters and properly incorporate this design into the overall building design. Bracing indicated is to prevent buckling of individual truss web and/or chord members only. Additional temporary and permanent bracing is always required for stability and to prevent collapse with possible personal injury and property damage. For general guidance regarding the fabrication, storage, delivery, erection and bracing of trusses and truss systems, see **ANSI/TPI1 Quality Criteria and DSB-22** available from Truss Plate Institute (www.tpinst.org) and **BCSI Building Component Safety Information** available from the Structural Building Component Association (www.sbcacomponents.com)

ENGINEERING BY TRENCO A MiTek Affiliate
818 Soundside Road
Edenton, NC 27932

Job	Truss	Truss Type	Qty	Ply	926 Serenity-Roof-329 A CP GLH
25060033-01	CJ2	Jack-Open	2	1	I74200579 Job Reference (optional)

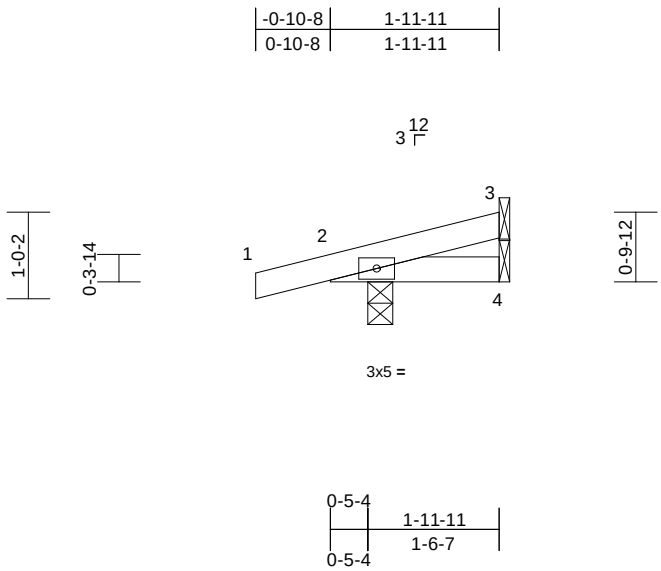

Scale = 1:27

Loading	(psf)	Spacing	2-0-0	CSI		DEFL	in	(loc)	l/defl	L/d	PLATES	GRIP
TCLL (roof)	20.0	Plate Grip DOL	1.15	TC	0.08	Vert(LL)	0.00	5	>999	240	MT20	244/190
Snow (Pf)	20.0	Lumber DOL	1.15	BC	0.07	Vert(CT)	0.00	5	>999	180		
TCDL	10.0	Rep Stress Incr	YES	WB	0.00	Horz(CT)	0.00	3	n/a	n/a		
BCLL	0.0*	Code	IRC2018/TPI2014	Matrix-MP								
BCDL	10.0										Weight: 7 lb	FT = 20%

LUMBER
TOP CHORD 2x4 SP No.2
BOT CHORD 2x4 SP No.2

BRACING
TOP CHORD Structural wood sheathing directly applied or 1-11-11 oc purlins.
BOT CHORD Rigid ceiling directly applied or 10-0-0 oc bracing.

REACTIONS (size) 2=0-3-8, 3= Mechanical, 4= Mechanical
Max Horiz 2=29 (LC 10)
Max Uplift 2=-86 (LC 10), 3=-8 (LC 14), 4=-4 (LC 11)
Max Grav 2=234 (LC 21), 3=25 (LC 21), 4=20 (LC 7)

FORCES (lb) - Maximum Compression/Maximum Tension
TOP CHORD 1-2=0/17, 2-3=-115/125
BOT CHORD 2-4=-121/139

NOTES
1) Wind: ASCE 7-16; Vult=130mph (3-second gust) Vasd=103mph; TCDL=6.0psf; BCDL=6.0psf; h=25ft; Cat. II; Exp B; Enclosed; MWFRS (envelope) exterior zone and C-C Exterior(2E) zone; porch left and right exposed;C-C for members and forces & MWFRS for reactions shown; Lumber DOL=1.60 plate grip DOL=1.60
2) TCLL: ASCE 7-16; Pr=20.0 psf (roof LL: Lum DOL=1.15 Plate DOL=1.15); Pf=20.0 psf (Lum DOL=1.15 Plate DOL=1.15); Is=1.0; Rough Cat B; Fully Exp.; Ce=0.9; Cs=1.00; Ct=1.10
3) Unbalanced snow loads have been considered for this design.
4) This truss has been designed for greater of min roof live load of 12.0 psf or 1.00 times flat roof load of 20.0 psf on overhangs non-concurrent with other live loads.
5) This truss has been designed for a 10.0 psf bottom chord live load nonconcurrent with any other live loads.
6) * This truss has been designed for a live load of 20.0psf on the bottom chord in all areas where a rectangle 3-06-00 tall by 2-00-00 wide will fit between the bottom chord and any other members.
7) Bearings are assumed to be: , Joint 2 User Defined .
8) Refer to girder(s) for truss to truss connections.
9) Provide mechanical connection (by others) of truss to bearing plate capable of withstanding 4 lb uplift at joint 4 and 8 lb uplift at joint 3.
10) One H2.5A Simpson Strong-Tie connectors recommended to connect truss to bearing walls due to UPLIFT at jt(s) 2. This connection is for uplift only and does not consider lateral forces.
11) This truss is designed in accordance with the 2018 International Residential Code sections R502.11.1 and R802.10.2 and referenced standard ANSI/TPI 1.

LOAD CASE(S) Standard

June 16,2025

WARNING - Verify design parameters and READ NOTES ON THIS AND INCLUDED MITEK REFERENCE PAGE MII-7473 rev. 1/2/2023 BEFORE USE.
Design valid for use only with MiTek® connectors. This design is based only upon parameters shown, and is for an individual building component, not a truss system. Before use, the building designer must verify the applicability of design parameters and properly incorporate this design into the overall building design. Bracing indicated is to prevent buckling of individual truss web and/or chord members only. Additional temporary and permanent bracing is always required for stability and to prevent collapse with possible personal injury and property damage. For general guidance regarding the fabrication, storage, delivery, erection and bracing of trusses and truss systems, see **ANSI/TPI1 Quality Criteria and DSB-22** available from Truss Plate Institute (www.tpinst.org) and **BCSI Building Component Safety Information** available from the Structural Building Component Association (www.sbcacomponents.com)

ENGINEERING BY TRENCO A MiTek Affiliate
818 Soundside Road
Edenton, NC 27932

Job	Truss	Truss Type	Qty	Ply	926 Serenity-Roof-329 A CP GLH
25060033-01	D01	Common Girder	1	1	I74200580 Job Reference (optional)

Carter Components (Sanford, NC), Sanford, NC - 27332, Run: 8.73 S Feb 19 2025 Print: 8.730 S Feb 19 2025 MiTek Industries, Inc. Fri Jun 13 10:53:30 Page: 1
ID:FxfwZql0vU_XFGKn2XT8rqyiMvf-RfC?PsB70Hq3NSgPqnL8w3uITXbGKWrCDoi7J4zJC?f

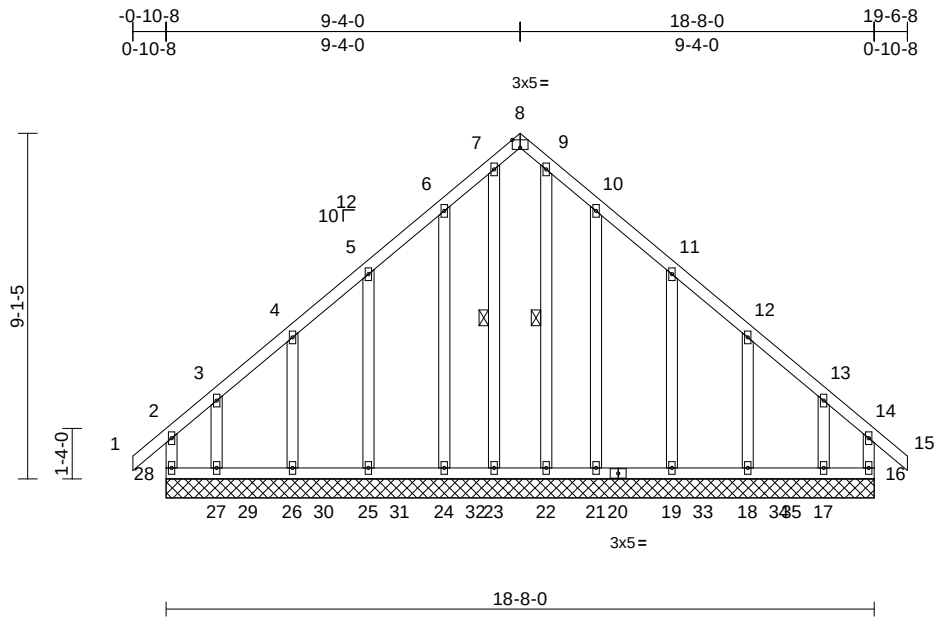

Scale = 1:60.7

Plate Offsets (X, Y): [8:0-2-8,Edge]

Loading	(psf)	Spacing	1-11-4	CSI		DEFL	in	(loc)	l/defl	L/d	PLATES	GRIP
TCLL (roof)	20.0	Plate Grip DOL	1.15	TC	0.23	Vert(LL)	n/a	-	n/a	999	MT20	244/190
Snow (Pf)	20.0	Lumber DOL	1.15	BC	0.14	Vert(CT)	n/a	-	n/a	999		
TCDL	10.0	Rep Stress Incr	NO	WB	0.18	Horz(CT)	0.00	16	n/a	n/a		
BCLL	0.0*	Code	IRC2018/TPI2014	Matrix-MR								
BCDL	10.0										Weight: 147 lb	FT = 20%

LUMBER
TOP CHORD 2x4 SP No.2
BOT CHORD 2x4 SP No.2
WEBS 2x4 SP No.3
OTHERS 2x4 SP No.3

BRACING
TOP CHORD Structural wood sheathing directly applied or 6-0-0 oc purlins, except end verticals.
BOT CHORD Rigid ceiling directly applied or 6-0-0 oc bracing.
WEBS 1 Row at midpt 7-23, 9-22

REACTIONS (size) 16=18-8-0, 17=18-8-0, 18=18-8-0, 19=18-8-0, 21=18-8-0, 22=18-8-0, 23=18-8-0, 24=18-8-0, 25=18-8-0, 26=18-8-0, 27=18-8-0, 28=18-8-0
Max Horiz 28=-231 (LC 10)
Max Uplift 16=-155 (LC 9), 17=-239 (LC 13), 18=-143 (LC 13), 19=-120 (LC 13), 21=-135 (LC 13), 22=-18 (LC 30), 23=-20 (LC 31), 24=-131 (LC 12), 25=-134 (LC 12), 26=-116 (LC 12), 27=-216 (LC 12), 28=-189 (LC 8)
Max Grav 16=241 (LC 22), 17=317 (LC 23), 18=326 (LC 1), 19=286 (LC 20), 21=306 (LC 20), 22=217 (LC 20), 23=212 (LC 19), 24=301 (LC 19), 25=313 (LC 19), 26=272 (LC 1), 27=284 (LC 22), 28=274 (LC 23)

FORCES (lb) - Maximum Compression/Maximum Tension
TOP CHORD 2-28=-166/116, 1-2=0/38, 2-3=-168/162, 3-4=-106/113, 4-5=-89/142, 5-6=-69/187, 6-7=-46/237, 7-8=-36/147, 8-9=-36/142, 9-10=-46/229, 10-11=-62/179, 11-12=-71/134, 12-13=-88/96, 13-14=-145/138, 14-15=0/38, 14-16=-151/97
BOT CHORD 27-28=-115/122, 26-27=-115/122, 25-26=-115/122, 24-25=-115/122, 23-24=-115/122, 22-23=-115/122, 21-22=-115/122, 19-21=-115/122, 18-19=-115/122, 17-18=-115/122, 16-17=-115/122
WEBS 7-23=-149/5, 9-22=-143/1, 6-24=-180/108, 5-25=-166/102, 4-26=-129/93, 3-27=-142/137, 10-21=-180/109, 11-19=-166/102, 12-18=-130/93, 13-17=-135/134

NOTES
1) Unbalanced roof live loads have been considered for this design.
2) Wind: ASCE 7-16; Vult=130mph (3-second gust) Vasd=103mph; TCDL=6.0psf; BCDL=6.0psf; h=25ft; Cat. II; Exp B; Enclosed; MWFRS (envelope) exterior zone; end vertical left and right exposed; Lumber DOL=1.60 plate grip DOL=1.60
3) Truss designed for wind loads in the plane of the truss only. For studs exposed to wind (normal to the face), see Standard Industry Gable End Details as applicable, or consult qualified building designer as per ANSI/TPI 1.
4) TCLL: ASCE 7-16; Pr=20.0 psf (roof LL: Lum DOL=1.15 Plate DOL=1.15); Pf=20.0 psf (Lum DOL=1.15 Plate DOL=1.15); Is=1.0; Rough Cat B; Fully Exp.; Ce=0.9; Cs=1.00; Ct=1.10
5) Unbalanced snow loads have been considered for this design.
6) This truss has been designed for greater of min roof live load of 12.0 psf or 1.00 times flat roof load of 20.0 psf on overhangs non-concurrent with other live loads.
7) All plates are 2x4 MT20 unless otherwise indicated.
8) Gable requires continuous bottom chord bearing.
9) Truss to be fully sheathed from one face or securely braced against lateral movement (i.e. diagonal web).
10) Gable studs spaced at 2-0-0 oc.
11) This truss has been designed for a 10.0 psf bottom chord live load nonconcurrent with any other live loads.
12) * This truss has been designed for a live load of 20.0psf on the bottom chord in all areas where a rectangle 3-06-00 tall by 2-00-00 wide will fit between the bottom chord and any other members.
13) Provide mechanical connection (by others) of truss to bearing plate capable of withstanding 189 lb uplift at joint 28, 155 lb uplift at joint 16, 20 lb uplift at joint 23, 18 lb uplift at joint 22, 131 lb uplift at joint 24, 134 lb uplift at joint 25, 116 lb uplift at joint 26, 216 lb uplift at joint 27, 135 lb uplift at joint 21, 120 lb uplift at joint 19, 143 lb uplift at joint 18 and 239 lb uplift at joint 17.
14) This truss is designed in accordance with the 2018 International Residential Code sections R502.11.1 and R802.10.2 and referenced standard ANSI/TPI 1.

June 16,2025

Continued on page 2

WARNING - Verify design parameters and READ NOTES ON THIS AND INCLUDED MITEK REFERENCE PAGE MII-7473 rev. 1/2/2023 BEFORE USE.
Design valid for use only with MiTek® connectors. This design is based only upon parameters shown, and is for an individual building component, not a truss system. Before use, the building designer must verify the applicability of design parameters and properly incorporate this design into the overall building design. Bracing indicated is to prevent buckling of individual truss web and/or chord members only. Additional temporary and permanent bracing is always required for stability and to prevent collapse with possible personal injury and property damage. For general guidance regarding the fabrication, storage, delivery, erection and bracing of trusses and truss systems, see **ANSI/TPI1 Quality Criteria and DSB-22** available from Truss Plate Institute (www.tpinst.org) and **BCSI Building Component Safety Information** available from the Structural Building Component Association (www.sbcacomponents.com)

ENGINEERING BY TRENCO A MiTek Affiliate
818 Soundside Road
Edenton, NC 27932

15) Hanger(s) or other connection device(s) shall be provided sufficient to support concentrated load(s) 85 lb down and 39 lb up at 0-1-12, 105 lb down and 52 lb up at 2-2-0, 105 lb down and 52 lb up at 4-2-0, 105 lb down and 52 lb up at 6-2-0, 105 lb down and 52 lb up at 8-2-0, 105 lb down and 52 lb up at 10-2-0, 105 lb down and 52 lb up at 12-2-0, 105 lb down and 52 lb up at 14-2-0, 105 lb down and 52 lb up at 16-2-0, and 105 lb down and 52 lb up at 16-6-0, and 85 lb down and 39 lb up at 18-6-4 on bottom chord. The design/selection of such connection device(s) is the responsibility of others.

LOAD CASE(S) Standard

1) Dead + Snow (balanced): Lumber Increase=1.15, Plate Increase=1.15
   Uniform Loads (lb/ft)
   Vert: 1-2=-58, 2-8=-58, 8-14=-58, 14-15=-58, 16-28=-19
   Concentrated Loads (lb)
   Vert: 28=-85, 20=-105, 16=-85, 22=-105, 29=-105, 30=-105, 31=-105, 32=-105, 33=-105, 34=-105, 35=-105

June 16,2025

WARNING - Verify design parameters and READ NOTES ON THIS AND INCLUDED MITEK REFERENCE PAGE MII-7473 rev. 1/2/2023 BEFORE USE.
Design valid for use only with MiTek® connectors. This design is based only upon parameters shown, and is for an individual building component, not a truss system. Before use, the building designer must verify the applicability of design parameters and properly incorporate this design into the overall building design. Bracing indicated is to prevent buckling of individual truss web and/or chord members only. Additional temporary and permanent bracing is always required for stability and to prevent collapse with possible personal injury and property damage. For general guidance regarding the fabrication, storage, delivery, erection and bracing of trusses and truss systems, see **ANSI/TPI1 Quality Criteria and DSB-22** available from Truss Plate Institute (www.tpinst.org) and **BCSI Building Component Safety Information** available from the Structural Building Component Association (www.sbcacomponents.com)

ENGINEERING BY TRENCO A MiTek Affiliate
818 Soundside Road
Edenton, NC 27932

Job	Truss	Truss Type	Qty	Ply	926 Serenity-Roof-329 A CP GLH
25060033-01	D02	Common Girder	1	**2**	I74200581 Job Reference (optional)

Carter Components (Sanford, NC), Sanford, NC - 27332, Run: 8.73 S Feb 19 2025 Print: 8.730 S Feb 19 2025 MiTek Industries, Inc. Fri Jun 13 10:53:31 Page: 1

ID:MxFwBELagtZwqajGkCZLsqyi1sF-RfC?PsB70Hq3NSgPqnL8w3uITXbGKWrCDoi7J4zJC?f

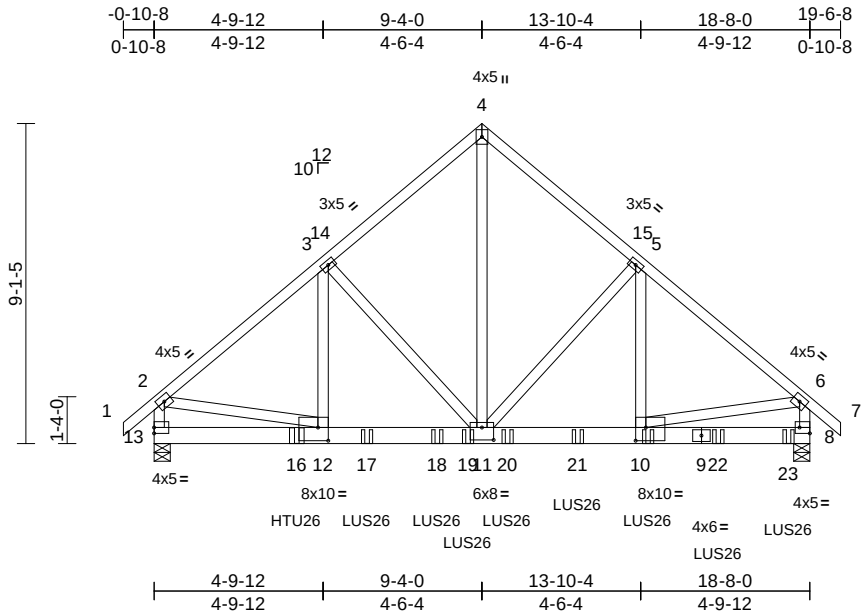

Scale = 1:65.6

Plate Offsets (X, Y): [8:Edge,0-2-0], [10:0-3-8,0-4-8], [11:0-4-0,0-4-4], [12:0-3-8,0-4-8]

Loading	(psf)	Spacing	2-0-0	CSI		DEFL	in	(loc)	l/defl	L/d	PLATES	GRIP
TCLL (roof)	20.0	Plate Grip DOL	1.15	TC	0.62	Vert(LL)	-0.07	11-12	>999	240	MT20	244/190
Snow (Pf)	20.0	Lumber DOL	1.15	BC	0.67	Vert(CT)	-0.11	11-12	>999	180		
TCDL	10.0	Rep Stress Incr	NO	WB	0.75	Horz(CT)	0.02	8	n/a	n/a		
BCLL	0.0*	Code	IRC2018/TPI2014	Matrix-MSH								
BCDL	10.0										Weight: 288 lb	FT = 20%

LUMBER

TOP CHORD 2x4 SP No.2
BOT CHORD 2x6 SP No.2
WEBS 2x4 SP No.3

BRACING

TOP CHORD Structural wood sheathing directly applied or 6-0-0 oc purlins, except end verticals.
BOT CHORD Rigid ceiling directly applied or 10-0-0 oc bracing.

REACTIONS (size) 8=0-5-8, 13=0-5-8
Max Horiz 13=-235 (LC 10)
Max Uplift 8=-738 (LC 13), 13=-785 (LC 12)
Max Grav 8=4035 (LC 20), 13=3683 (LC 19)

FORCES (lb) - Maximum Compression/Maximum Tension
TOP CHORD 1-2=0/39, 2-3=-4274/927, 3-4=-3205/707, 4-5=-3205/707, 5-6=-3917/749, 6-7=0/39, 2-13=-3542/758, 6-8=-3229/613
BOT CHORD 12-13=-269/413, 11-12=-705/3215, 10-11=-488/2940, 8-10=-102/360
WEBS 4-11=-795/3627, 5-11=-905/281, 5-10=-143/885, 3-11=-1280/484, 3-12=-406/1325, 2-12=-571/3055, 6-10=-433/2664

NOTES

1) 2-ply truss to be connected together with 10d (0.131"x3") nails as follows:
Top chords connected as follows: 2x4 - 1 row at 0-9-0 oc.
Bottom chords connected as follows: 2x6 - 2 rows staggered at 0-9-0 oc.
Web connected as follows: 2x4 - 1 row at 0-9-0 oc.
2) All loads are considered equally applied to all plies, except if noted as front (F) or back (B) face in the LOAD CASE(S) section. Ply to ply connections have been provided to distribute only loads noted as (F) or (B), unless otherwise indicated.
3) Unbalanced roof live loads have been considered for this design.
4) Wind: ASCE 7-16; Vult=130mph (3-second gust) Vasd=103mph; TCDL=6.0psf; BCDL=6.0psf; h=25ft; Cat. II; Exp B; Enclosed; MWFRS (envelope) exterior zone; end vertical left and right exposed; Lumber DOL=1.60 plate grip DOL=1.60
5) TCLL: ASCE 7-16; Pr=20.0 psf (roof LL: Lum DOL=1.15 Plate DOL=1.15); Pf=20.0 psf (Lum DOL=1.15 Plate DOL=1.15); Is=1.0; Rough Cat B; Fully Exp.; Ce=0.9; Cs=1.00; Ct=1.10
6) Unbalanced snow loads have been considered for this design.
7) This truss has been designed for greater of min roof live load of 12.0 psf or 1.00 times flat roof load of 20.0 psf on overhangs non-concurrent with other live loads.
8) This truss has been designed for a 10.0 psf bottom chord live load nonconcurrent with any other live loads.
9) * This truss has been designed for a live load of 20.0psf on the bottom chord in all areas where a rectangle 3-06-00 tall by 2-00-00 wide will fit between the bottom chord and any other members.
10) LGT2 Simpson Strong-Tie connectors recommended to connect truss to bearing walls due to UPLIFT at jt(s) 13 and 8. This connection is for uplift only and does not consider lateral forces.
11) This truss is designed in accordance with the 2018 International Residential Code sections R502.11.1 and R802.10.2 and referenced standard ANSI/TPI 1.
12) Use Simpson Strong-Tie HTU26 (10-16d Girder, 14-10dx1 1/2 Truss) or equivalent at 4-0-12 from the left end to connect truss(es) to back face of bottom chord.
13) Use Simpson Strong-Tie LUS26 (4-10d Girder, 3-10d Truss, Single Ply Girder) or equivalent spaced at 2-0-0 oc max. starting at 6-0-12 from the left end to 18-0-12 to connect truss(es) to back face of bottom chord.
14) Fill all nail holes where hanger is in contact with lumber.
15) LGT2 Hurricane ties must have two studs in line below the truss.

LOAD CASE(S) Standard

1) Dead + Snow (balanced): Lumber Increase=1.15, Plate Increase=1.15
Uniform Loads (lb/ft)
Vert: 1-2=-60, 2-4=-60, 4-6=-60, 6-7=-60, 8-13=-20
Concentrated Loads (lb)
Vert: 10=-554 (B), 16=-1160 (B), 17=-811 (B), 18=-695 (B), 19=-567 (B), 20=-554 (B), 21=-554 (B), 22=-559 (B), 23=-564 (B)

June 16,2025

WARNING - Verify design parameters and READ NOTES ON THIS AND INCLUDED MITEK REFERENCE PAGE MII-7473 rev. 1/2/2023 BEFORE USE.
Design valid for use only with MiTek® connectors. This design is based only upon parameters shown, and is for an individual building component, not a truss system. Before use, the building designer must verify the applicability of design parameters and properly incorporate this design into the overall building design. Bracing indicated is to prevent buckling of individual truss web and/or chord members only. Additional temporary and permanent bracing is always required for stability and to prevent collapse with possible personal injury and property damage. For general guidance regarding the fabrication, storage, delivery, erection and bracing of trusses and truss systems, see **ANSI/TPI1 Quality Criteria and DSB-22** available from Truss Plate Institute (www.tpinst.org) and **BCSI Building Component Safety Information** available from the Structural Building Component Association (www.sbcacomponents.com)

ENGINEERING BY TRENCO A MiTek Affiliate
818 Soundside Road
Edenton, NC 27932

Job	Truss	Truss Type	Qty	Ply	926 Serenity-Roof-329 A CP GLH
25060033-01	E01	Common Supported Gable	1	1	I74200582 Job Reference (optional)

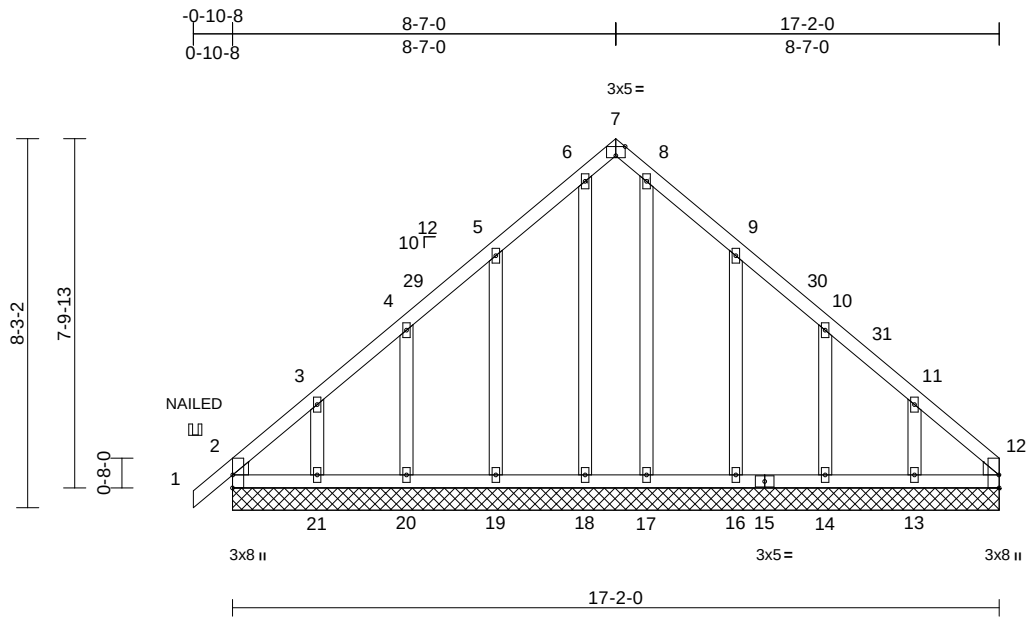

Scale = 1:51.6

Plate Offsets (X, Y): [2:Edge,0-0-1], [7:0-2-8,Edge], [12:Edge,0-0-1]

Loading	(psf)	Spacing	2-0-0	CSI		DEFL	in	(loc)	l/defl	L/d	PLATES	GRIP
TCLL (roof)	20.0	Plate Grip DOL	1.15	TC	0.24	Vert(LL)	n/a	-	n/a	999	MT20	244/190
Snow (Pf)	20.0	Lumber DOL	1.15	BC	0.14	Vert(CT)	n/a	-	n/a	999		
TCDL	10.0	Rep Stress Incr	YES	WB	0.14	Horz(CT)	0.01	12	n/a	n/a		
BCLL	0.0*	Code	IRC2018/TPI2014	Matrix-MSH								
BCDL	10.0										Weight: 112 lb	FT = 20%

LUMBER

TOP CHORD 2x4 SP No.2
BOT CHORD 2x4 SP No.2
OTHERS 2x4 SP No.3
WEDGE Left: 2x4 SP No.3
Right: 2x4 SP No.3

BRACING

TOP CHORD Structural wood sheathing directly applied or 6-0-0 oc purlins.
BOT CHORD Rigid ceiling directly applied or 10-0-0 oc bracing.

REACTIONS (size) 2=17-2-0, 12=17-2-0, 13=17-2-0, 14=17-2-0, 16=17-2-0, 17=17-2-0, 18=17-2-0, 19=17-2-0, 20=17-2-0, 21=17-2-0
Max Horiz 2=179 (LC 11)
Max Uplift 2=-198 (LC 10), 12=-30 (LC 13), 13=-128 (LC 15), 14=-62 (LC 57), 16=-96 (LC 57), 18=-11 (LC 11), 19=-97 (LC 56), 20=-78 (LC 14), 21=-187 (LC 56)
Max Grav 2=275 (LC 27), 12=147 (LC 15), 13=203 (LC 26), 14=178 (LC 47), 16=267 (LC 47), 17=183 (LC 22), 18=183 (LC 21), 19=271 (LC 46), 20=178 (LC 21), 21=255 (LC 49)

FORCES (lb) - Maximum Compression/Maximum Tension
TOP CHORD 1-2=-94/76, 2-3=-213/131, 3-4=-136/103, 4-5=-96/80, 5-6=-105/138, 6-7=-68/115, 7-8=-68/115, 8-9=-105/137, 9-10=-80/48, 10-11=-108/65, 11-12=-201/100
BOT CHORD 2-21=-169/201, 20-21=-73/182, 19-20=-73/182, 18-19=-73/182, 17-18=-73/182, 16-17=-73/182, 14-16=-73/182, 13-14=-73/182, 12-13=-73/182
WEBS 6-18=-151/31, 8-17=-151/4, 5-19=-226/141, 4-20=-152/117, 3-21=-155/168, 9-16=-225/139, 10-14=-147/113, 11-13=-157/157

NOTES

1) Unbalanced roof live loads have been considered for this design.
2) Wind: ASCE 7-16; Vult=130mph (3-second gust) Vasd=103mph; TCDL=6.0psf; BCDL=6.0psf; h=25ft; Cat. II; Exp B; Enclosed; MWFRS (envelope) exterior zone and C-C Corner(3E) -0-10-8 to 1-10-12, Exterior(2N) 1-10-12 to 5-7-0, Corner(3R) 5-7-0 to 11-7-0, Exterior (2N) 11-7-0 to 14-2-0, Corner(3E) 14-2-0 to 17-2-0 zone; cantilever left and right exposed ; end vertical left and right exposed;C-C for members and forces & MWFRS for reactions shown; Lumber DOL=1.60 plate grip DOL=1.60
3) Truss designed for wind loads in the plane of the truss only. For studs exposed to wind (normal to the face), see Standard Industry Gable End Details as applicable, or consult qualified building designer as per ANSI/TPI 1.
4) TCLL: ASCE 7-16; Pr=20.0 psf (roof LL: Lum DOL=1.15 Plate DOL=1.15); Pf=20.0 psf (Lum DOL=1.15 Plate DOL=1.15); Is=1.0; Rough Cat B; Fully Exp.; Ce=0.9; Cs=1.00; Ct=1.10
5) Unbalanced snow loads have been considered for this design.
6) This truss has been designed for greater of min roof live load of 12.0 psf or 1.00 times flat roof load of 20.0 psf on overhangs non-concurrent with other live loads.
7) All plates are 2x4 MT20 unless otherwise indicated.
8) Gable requires continuous bottom chord bearing.
9) Gable studs spaced at 2-0-0 oc.
10) This truss has been designed for a 10.0 psf bottom chord live load nonconcurrent with any other live loads.
11) * This truss has been designed for a live load of 20.0psf on the bottom chord in all areas where a rectangle 3-06-00 tall by 2-00-00 wide will fit between the bottom chord and any other members.
12) Provide mechanical connection (by others) of truss to bearing plate capable of withstanding 198 lb uplift at joint 2, 30 lb uplift at joint 12, 11 lb uplift at joint 18, 97 lb uplift at joint 19, 78 lb uplift at joint 20, 187 lb uplift at joint 21, 96 lb uplift at joint 16, 62 lb uplift at joint 14, 128 lb uplift at joint 13, 198 lb uplift at joint 2 and 30 lb uplift at joint 12.
13) Beveled plate or shim required to provide full bearing surface with truss chord at joint(s) 12, 26.
14) This truss is designed in accordance with the 2018 International Residential Code sections R502.11.1 and R802.10.2 and referenced standard ANSI/TPI 1.
15) "NAILED" indicates 3-10d (0.148"x3") or 3-12d (0.148"x3.25") toe-nails per NDS guidlines.
16) In the LOAD CASE(S) section, loads applied to the face of the truss are noted as front (F) or back (B).

LOAD CASE(S) Standard

June 16,2025

Continued on page 2

WARNING - Verify design parameters and READ NOTES ON THIS AND INCLUDED MITEK REFERENCE PAGE MII-7473 rev. 1/2/2023 BEFORE USE.
Design valid for use only with MiTek® connectors. This design is based only upon parameters shown, and is for an individual building component, not a truss system. Before use, the building designer must verify the applicability of design parameters and properly incorporate this design into the overall building design. Bracing indicated is to prevent buckling of individual truss web and/or chord members only. Additional temporary and permanent bracing is always required for stability and to prevent collapse with possible personal injury and property damage. For general guidance regarding the fabrication, storage, delivery, erection and bracing of trusses and truss systems, see **ANSI/TPI1 Quality Criteria and DSB-22** available from Truss Plate Institute (www.tpinst.org) and **BCSI Building Component Safety Information** available from the Structural Building Component Association (www.sbcacomponents.com)

ENGINEERING BY TRENCO A MiTek Affiliate
818 Soundside Road
Edenton, NC 27932

1) Dead + Snow (balanced): Lumber Increase=1.15, Plate Increase=1.15
Uniform Loads (lb/ft)
Vert: 1-7=-60, 7-12=-60, 22-26=-20
Concentrated Loads (lb)
Vert: 1=26 (B)

NORTH CAROLINA PROFESSIONAL SEAL 036322 ENGINEER ERIC A. GILBERT

June 16,2025

WARNING - Verify design parameters and READ NOTES ON THIS AND INCLUDED MITEK REFERENCE PAGE MII-7473 rev. 1/2/2023 BEFORE USE.
Design valid for use only with MiTek® connectors. This design is based only upon parameters shown, and is for an individual building component, not a truss system. Before use, the building designer must verify the applicability of design parameters and properly incorporate this design into the overall building design. Bracing indicated is to prevent buckling of individual truss web and/or chord members only. Additional temporary and permanent bracing is always required for stability and to prevent collapse with possible personal injury and property damage. For general guidance regarding the fabrication, storage, delivery, erection and bracing of trusses and truss systems, see **ANSI/TPI1 Quality Criteria and DSB-22** available from Truss Plate Institute (www.tpinst.org) and **BCSI Building Component Safety Information** available from the Structural Building Component Association (www.sbcacomponents.com)

ENGINEERING BY TRENCO A MiTek Affiliate
818 Soundside Road
Edenton, NC 27932

Job	Truss	Truss Type	Qty	Ply	926 Serenity-Roof-329 A CP GLH
25060033-01	E02	Common Girder	1	**2**	I74200583 Job Reference (optional)

Carter Components (Sanford, NC), Sanford, NC - 27332,

Run: 8.73 S Feb 19 2025 Print: 8.730 S Feb 19 2025 MiTek Industries, Inc. Fri Jun 13 10:53:31 Page: 1
ID:b7_VE9M3qjmyqXpPx6mIdSyiMBg-RfC?PsB70Hq3NSgPqnL8w3uITXbGKWrCDoi7J4zJC?f

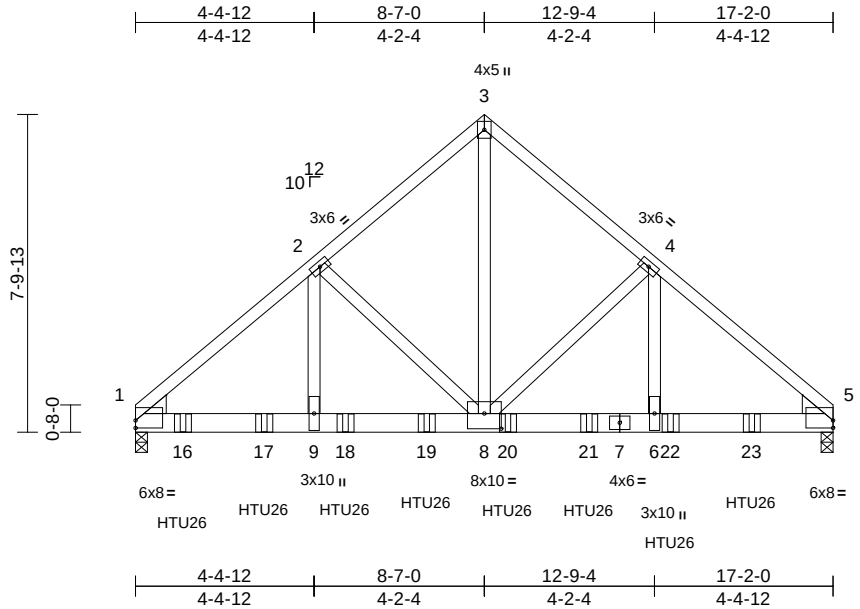

Scale = 1:56.7

Plate Offsets (X, Y): [1:Edge,0-2-4], [5:Edge,0-2-4], [8:0-5-0,0-4-8]

Loading	(psf)	**Spacing**	2-0-0	**CSI**		**DEFL**	in	(loc)	l/defl	L/d	**PLATES**	**GRIP**
TCLL (roof)	20.0	Plate Grip DOL	1.15	TC	0.39	Vert(LL)	-0.08	6-8	>999	240	MT20	244/190
Snow (Pf)	20.0	Lumber DOL	1.15	BC	0.92	Vert(CT)	-0.14	6-8	>999	180		
TCDL	10.0	Rep Stress Incr	NO	WB	0.64	Horz(CT)	0.04	5	n/a	n/a		
BCLL	0.0*	Code	IRC2018/TPI2014	Matrix-MSH								
BCDL	10.0										Weight: 227 lb	FT = 20%

LUMBER

TOP CHORD 2x4 SP No.2
BOT CHORD 2x6 SP No.2
WEBS 2x4 SP No.3 *Except* 8-3:2x4 SP No.2
WEDGE Left: 2x6 SP No.2
Right: 2x6 SP No.2

BRACING

TOP CHORD Structural wood sheathing directly applied or 4-10-13 oc purlins.
BOT CHORD Rigid ceiling directly applied or 10-0-0 oc bracing.

REACTIONS (size) 1=0-3-8, 5=0-3-8
Max Horiz 1=168 (LC 9)
Max Uplift 1=-541 (LC 12), 5=-496 (LC 13)
Max Grav 1=5358 (LC 5), 5=4921 (LC 6)

FORCES (lb) - Maximum Compression/Maximum Tension
TOP CHORD 1-2=-6259/654, 2-3=-4382/534, 3-4=-4380/534, 4-5=-6200/647
BOT CHORD 1-9=-532/4756, 8-9=-532/4756, 6-8=-444/4705, 5-6=-444/4705
WEBS 3-8=-582/5210, 4-8=-1945/331, 4-6=-198/2268, 2-8=-2015/337, 2-9=-205/2343

NOTES

1) 2-ply truss to be connected together with 10d (0.131"x3") nails as follows:
Top chords connected as follows: 2x4 - 1 row at 0-9-0 oc.
Bottom chords connected as follows: 2x6 - 2 rows staggered at 0-9-0 oc.
Web connected as follows: 2x4 - 1 row at 0-9-0 oc.
2) All loads are considered equally applied to all plies, except if noted as front (F) or back (B) face in the LOAD CASE(S) section. Ply to ply connections have been provided to distribute only loads noted as (F) or (B), unless otherwise indicated.
3) Unbalanced roof live loads have been considered for this design.
4) Wind: ASCE 7-16; Vult=130mph (3-second gust) Vasd=103mph; TCDL=6.0psf; BCDL=6.0psf; h=25ft; Cat. II; Exp B; Enclosed; MWFRS (envelope) exterior zone; cantilever left and right exposed ; end vertical left and right exposed; Lumber DOL=1.60 plate grip DOL=1.60
5) TCLL: ASCE 7-16; Pr=20.0 psf (roof LL: Lum DOL=1.15 Plate DOL=1.15); Pf=20.0 psf (Lum DOL=1.15 Plate DOL=1.15); Is=1.0; Rough Cat B; Fully Exp.; Ce=0.9; Cs=1.00; Ct=1.10
6) Unbalanced snow loads have been considered for this design.
7) This truss has been designed for a 10.0 psf bottom chord live load nonconcurrent with any other live loads.
8) * This truss has been designed for a live load of 20.0psf on the bottom chord in all areas where a rectangle 3-06-00 tall by 2-00-00 wide will fit between the bottom chord and any other members.
9) One H2.5A Simpson Strong-Tie connectors recommended to connect truss to bearing walls due to UPLIFT at jt(s) 1 and 5. This connection is for uplift only and does not consider lateral forces.
10) This truss is designed in accordance with the 2018 International Residential Code sections R502.11.1 and R802.10.2 and referenced standard ANSI/TPI 1.
11) Use Simpson Strong-Tie HTU26 (10-16d Girder, 14-10dx1 1/2 Truss) or equivalent spaced at 2-0-0 oc max. starting at 1-2-0 from the left end to 9-2-0 to connect truss(es) to back face of bottom chord.
12) Use Simpson Strong-Tie HTU26 (10-16d Girder, 14-10dx1 1/2 Truss) or equivalent spaced at 2-0-0 oc max. starting at 11-2-0 from the left end to 15-2-0 to connect truss(es) to back face of bottom chord.
13) Fill all nail holes where hanger is in contact with lumber.

LOAD CASE(S) Standard

1) Dead + Snow (balanced): Lumber Increase=1.15, Plate Increase=1.15
Uniform Loads (lb/ft)
Vert: 1-3=-60, 3-5=-60, 10-13=-20
Concentrated Loads (lb)
Vert: 16=-1043 (B), 17=-1043 (B), 18=-1043 (B), 19=-1043 (B), 20=-1043 (B), 21=-1043 (B), 22=-1043 (B), 23=-1043 (B)

June 16,2025

WARNING - Verify design parameters and READ NOTES ON THIS AND INCLUDED MITEK REFERENCE PAGE MII-7473 rev. 1/2/2023 BEFORE USE.
Design valid for use only with MiTek® connectors. This design is based only upon parameters shown, and is for an individual building component, not a truss system. Before use, the building designer must verify the applicability of design parameters and properly incorporate this design into the overall building design. Bracing indicated is to prevent buckling of individual truss web and/or chord members only. Additional temporary and permanent bracing is always required for stability and to prevent collapse with possible personal injury and property damage. For general guidance regarding the fabrication, storage, delivery, erection and bracing of trusses and truss systems, see **ANSI/TPI1 Quality Criteria and DSB-22** available from Truss Plate Institute (www.tpinst.org) and **BCSI Building Component Safety Information** available from the Structural Building Component Association (www.sbcacomponents.com)

ENGINEERING BY TRENCO A MiTek Affiliate
818 Soundside Road
Edenton, NC 27932

Job	Truss	Truss Type	Qty	Ply	926 Serenity-Roof-329 A CP GLH
25060033-01	EJ4	Jack-Open	23	1	I74200584 Job Reference (optional)

Carter Components (Sanford, NC), Sanford, NC - 27332, Run: 8.73 S Feb 19 2025 Print: 8.730 S Feb 19 2025 MiTek Industries, Inc. Fri Jun 13 10:53:31 Page: 1
ID:d3hD92STiplWgxctoeVD3ZyiMtS-RfC?PsB70Hq3NSgPqnL8w3uITXbGKWrCDoi7J4zJC?f

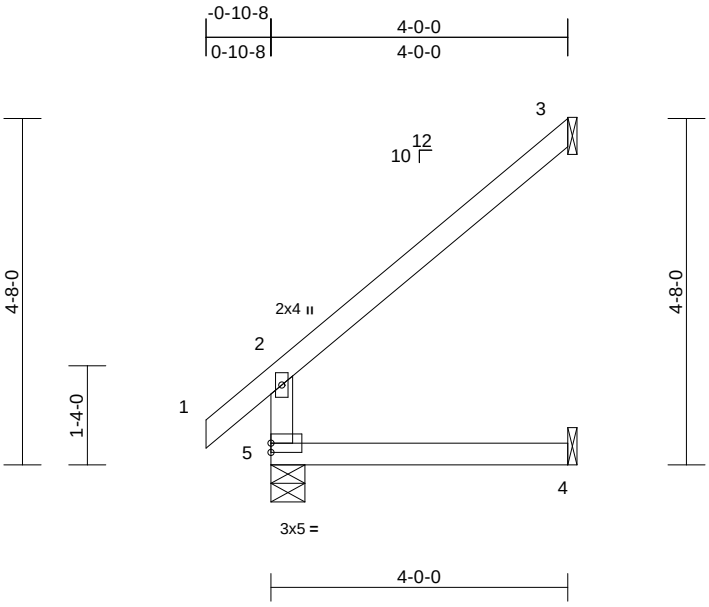

Scale = 1:31.1

Loading	(psf)	Spacing	2-0-0	CSI		DEFL	in	(loc)	l/defl	L/d	PLATES	GRIP
TCLL (roof)	20.0	Plate Grip DOL	1.15	TC	0.52	Vert(LL)	0.03	4-5	>999	240	MT20	244/190
Snow (Pf)	20.0	Lumber DOL	1.15	BC	0.36	Vert(CT)	-0.03	4-5	>999	180		
TCDL	10.0	Rep Stress Incr	YES	WB	0.00	Horz(CT)	-0.06	3	n/a	n/a		
BCLL	0.0*	Code	IRC2018/TPI2014	Matrix-MR								
BCDL	10.0										Weight: 17 lb	FT = 20%

LUMBER
TOP CHORD 2x4 SP No.2
BOT CHORD 2x4 SP No.2
WEBS 2x4 SP No.3

BRACING
TOP CHORD Structural wood sheathing directly applied or 4-0-0 oc purlins, except end verticals.
BOT CHORD Rigid ceiling directly applied or 10-0-0 oc bracing.

REACTIONS (size) 3= Mechanical, 4= Mechanical, 5=0-5-8
Max Horiz 5=129 (LC 14)
Max Uplift 3=-99 (LC 14), 4=-8 (LC 14)
Max Grav 3=178 (LC 21), 4=73 (LC 7), 5=307 (LC 21)

FORCES (lb) - Maximum Compression/Maximum Tension
TOP CHORD 2-5=-283/75, 1-2=0/39, 2-3=-142/88
BOT CHORD 4-5=0/0

NOTES
1) Wind: ASCE 7-16; Vult=130mph (3-second gust) Vasd=103mph; TCDL=6.0psf; BCDL=6.0psf; h=25ft; Cat. II; Exp B; Enclosed; MWFRS (envelope) exterior zone and C-C Exterior(2E) zone; end vertical left exposed;C-C for members and forces & MWFRS for reactions shown; Lumber DOL=1.60 plate grip DOL=1.60

2) TCLL: ASCE 7-16; Pr=20.0 psf (roof LL: Lum DOL=1.15 Plate DOL=1.15); Pf=20.0 psf (Lum DOL=1.15 Plate DOL=1.15); Is=1.0; Rough Cat B; Fully Exp.; Ce=0.9; Cs=1.00; Ct=1.10
3) Unbalanced snow loads have been considered for this design.
4) This truss has been designed for greater of min roof live load of 12.0 psf or 1.00 times flat roof load of 20.0 psf on overhangs non-concurrent with other live loads.
5) This truss has been designed for a 10.0 psf bottom chord live load nonconcurrent with any other live loads.
6) * This truss has been designed for a live load of 20.0psf on the bottom chord in all areas where a rectangle 3-06-00 tall by 2-00-00 wide will fit between the bottom chord and any other members.
7) Bearings are assumed to be: , Joint 5 User Defined .
8) Refer to girder(s) for truss to truss connections.
9) Provide mechanical connection (by others) of truss to bearing plate capable of withstanding 99 lb uplift at joint 3 and 8 lb uplift at joint 4.
10) This truss is designed in accordance with the 2018 International Residential Code sections R502.11.1 and R802.10.2 and referenced standard ANSI/TPI 1.

LOAD CASE(S) Standard

June 16,2025

WARNING - Verify design parameters and READ NOTES ON THIS AND INCLUDED MITEK REFERENCE PAGE MII-7473 rev. 1/2/2023 BEFORE USE.
Design valid for use only with MiTek® connectors. This design is based only upon parameters shown, and is for an individual building component, not a truss system. Before use, the building designer must verify the applicability of design parameters and properly incorporate this design into the overall building design. Bracing indicated is to prevent buckling of individual truss web and/or chord members only. Additional temporary and permanent bracing is always required for stability and to prevent collapse with possible personal injury and property damage. For general guidance regarding the fabrication, storage, delivery, erection and bracing of trusses and truss systems, see **ANSI/TPI1 Quality Criteria and DSB-22** available from Truss Plate Institute (www.tpinst.org) and **BCSI Building Component Safety Information** available from the Structural Building Component Association (www.sbcacomponents.com)

ENGINEERING BY TRENCO A MiTek Affiliate
818 Soundside Road
Edenton, NC 27932

Job	Truss	Truss Type	Qty	Ply	926 Serenity-Roof-329 A CP GLH
25060033-01	EJ4B	Jack-Open	2	1	I74200585 Job Reference (optional)

Carter Components (Sanford, NC), Sanford, NC - 27332,

Run: 8.73 S Feb 19 2025 Print: 8.730 S Feb 19 2025 MiTek Industries, Inc. Fri Jun 13 10:53:31 Page: 1
ID:gULXnTbdkc2aFYwQ74WH4Ryi1Mx-RfC?PsB70Hq3NSgPqnL8w3uITXbGKWrCDoi7J4zJC?f

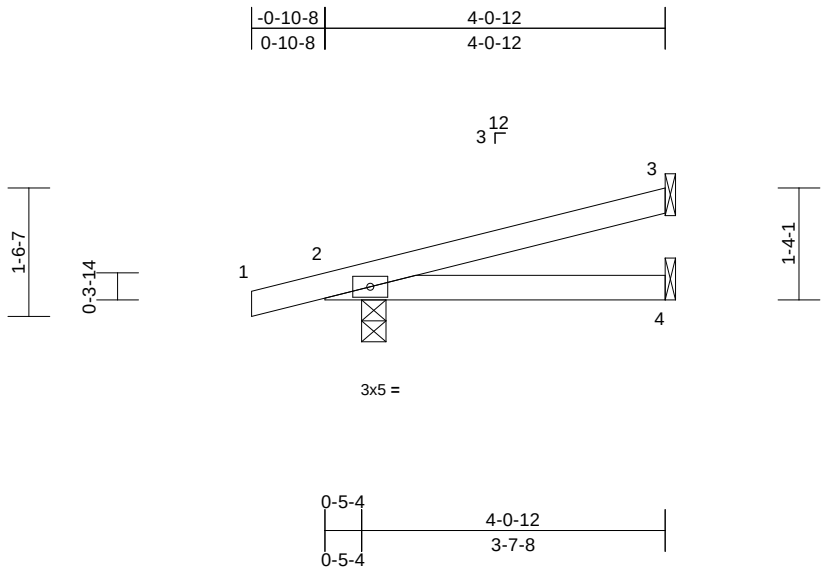

Scale = 1:27.5

Loading	(psf)	Spacing	2-0-0	CSI		DEFL	in	(loc)	l/defl	L/d	PLATES	GRIP
TCLL (roof)	20.0	Plate Grip DOL	1.15	TC	0.20	Vert(LL)	0.01	4-9	>999	240	MT20	244/190
Snow (Pf)	20.0	Lumber DOL	1.15	BC	0.14	Vert(CT)	-0.02	4-9	>999	180		
TCDL	10.0	Rep Stress Incr	YES	WB	0.00	Horz(CT)	0.00	3	n/a	n/a		
BCLL	0.0*	Code	IRC2018/TPI2014	Matrix-MP								
BCDL	10.0										Weight: 14 lb	FT = 20%

LUMBER
TOP CHORD 2x4 SP No.2
BOT CHORD 2x4 SP No.2

BRACING
TOP CHORD Structural wood sheathing directly applied or 4-0-12 oc purlins.
BOT CHORD Rigid ceiling directly applied or 10-0-0 oc bracing.

REACTIONS (size) 2=0-3-8, 3= Mechanical, 4= Mechanical
Max Horiz 2=47 (LC 10)
Max Uplift 2=-103 (LC 10), 3=-37 (LC 10), 4=-13 (LC 10)
Max Grav 2=328 (LC 21), 3=119 (LC 21), 4=62 (LC 7)

FORCES (lb) - Maximum Compression/Maximum Tension
TOP CHORD 1-2=0/18, 2-3=-114/133
BOT CHORD 2-4=-128/139

NOTES
1) Wind: ASCE 7-16; Vult=130mph (3-second gust) Vasd=103mph; TCDL=6.0psf; BCDL=6.0psf; h=25ft; Cat. II; Exp B; Enclosed; MWFRS (envelope) exterior zone and C-C Exterior(2E) zone; porch left and right exposed;C-C for members and forces & MWFRS for reactions shown; Lumber DOL=1.60 plate grip DOL=1.60
2) TCLL: ASCE 7-16; Pr=20.0 psf (roof LL: Lum DOL=1.15 Plate DOL=1.15); Pf=20.0 psf (Lum DOL=1.15 Plate DOL=1.15); Is=1.0; Rough Cat B; Fully Exp.; Ce=0.9; Cs=1.00; Ct=1.10
3) Unbalanced snow loads have been considered for this design.
4) This truss has been designed for greater of min roof live load of 12.0 psf or 1.00 times flat roof load of 20.0 psf on overhangs non-concurrent with other live loads.
5) This truss has been designed for a 10.0 psf bottom chord live load nonconcurrent with any other live loads.
6) * This truss has been designed for a live load of 20.0psf on the bottom chord in all areas where a rectangle 3-06-00 tall by 2-00-00 wide will fit between the bottom chord and any other members.
7) Bearings are assumed to be: , Joint 2 User Defined .
8) Refer to girder(s) for truss to truss connections.
9) Provide mechanical connection (by others) of truss to bearing plate capable of withstanding 37 lb uplift at joint 3 and 13 lb uplift at joint 4.
10) One H2.5A Simpson Strong-Tie connectors recommended to connect truss to bearing walls due to UPLIFT at jt(s) 2. This connection is for uplift only and does not consider lateral forces.
11) This truss is designed in accordance with the 2018 International Residential Code sections R502.11.1 and R802.10.2 and referenced standard ANSI/TPI 1.

LOAD CASE(S) Standard

June 16,2025

WARNING - Verify design parameters and READ NOTES ON THIS AND INCLUDED MITEK REFERENCE PAGE MII-7473 rev. 1/2/2023 BEFORE USE.
Design valid for use only with MiTek® connectors. This design is based only upon parameters shown, and is for an individual building component, not a truss system. Before use, the building designer must verify the applicability of design parameters and properly incorporate this design into the overall building design. Bracing indicated is to prevent buckling of individual truss web and/or chord members only. Additional temporary and permanent bracing is always required for stability and to prevent collapse with possible personal injury and property damage. For general guidance regarding the fabrication, storage, delivery, erection and bracing of trusses and truss systems, see **ANSI/TPI1 Quality Criteria and DSB-22** available from Truss Plate Institute (www.tpinst.org) and **BCSI Building Component Safety Information** available from the Structural Building Component Association (www.sbcacomponents.com)

ENGINEERING BY TRENCO A MiTek Affiliate
818 Soundside Road
Edenton, NC 27932

Job	Truss	Truss Type	Qty	Ply	926 Serenity-Roof-329 A CP GLH
25060033-01	G01	Common Supported Gable	1	1	I74200586 Job Reference (optional)

Carter Components (Sanford, NC), Sanford, NC - 27332,

Run: 8.73 S Feb 19 2025 Print: 8.730 S Feb 19 2025 MiTek Industries, Inc. Fri Jun 13 10:53:31 Page: 1
ID:mLR7vN0R3K1chD22YTDJ1syiMl_-RfC?PsB70Hq3NSgPqnL8w3uITXbGKWrCDoi7J4zJC?f

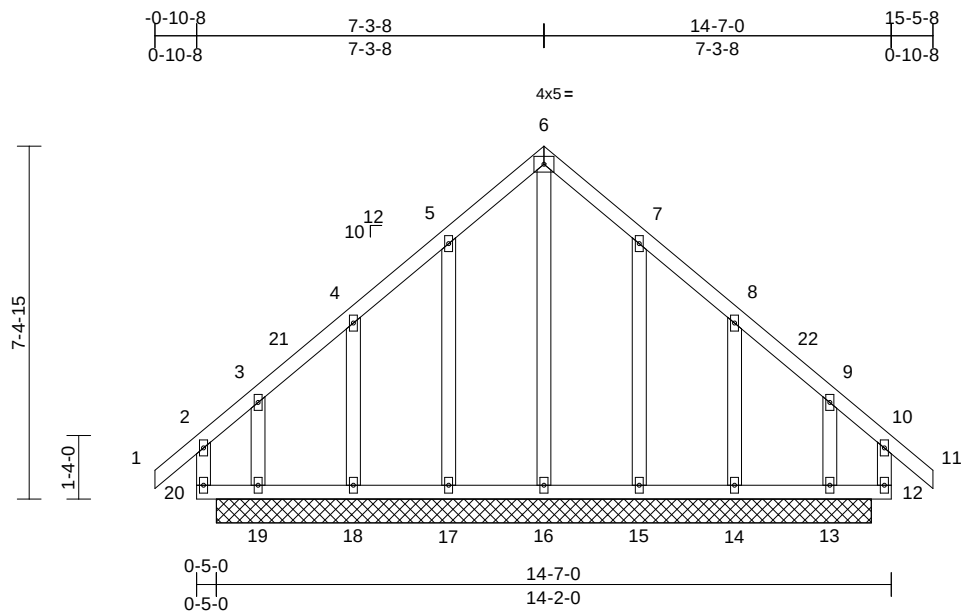

Scale = 1:48.4

Loading	(psf)	Spacing	1-11-4	CSI		DEFL	in	(loc)	l/defl	L/d	PLATES	GRIP
TCLL (roof)	20.0	Plate Grip DOL	1.15	TC	0.20	Vert(LL)	n/a	-	n/a	999	MT20	244/190
Snow (Pf)	20.0	Lumber DOL	1.15	BC	0.16	Vert(CT)	n/a	-	n/a	999		
TCDL	10.0	Rep Stress Incr	YES	WB	0.27	Horz(CT)	0.00	13	n/a	n/a		
BCLL	0.0*	Code	IRC2018/TPI2014	Matrix-MR								
BCDL	10.0										Weight: 98 lb	FT = 20%

LUMBER

TOP CHORD 2x4 SP No.2
BOT CHORD 2x4 SP No.2
WEBS 2x4 SP No.3
OTHERS 2x4 SP No.3

BRACING

TOP CHORD Structural wood sheathing directly applied or 10-0-0 oc purlins, except end verticals.
BOT CHORD Rigid ceiling directly applied or 6-0-0 oc bracing.

REACTIONS (size) 13=13-9-0, 14=13-9-0, 15=13-9-0, 16=13-9-0, 17=13-9-0, 18=13-9-0, 19=13-9-0
Max Horiz 19=192 (LC 13)
Max Uplift 13=-105 (LC 14), 14=-133 (LC 15), 15=-58 (LC 15), 17=-57 (LC 14), 18=-136 (LC 11), 19=-106 (LC 15)
Max Grav 13=244 (LC 30), 14=224 (LC 31), 15=277 (LC 22), 16=252 (LC 28), 17=277 (LC 21), 18=226 (LC 30), 19=248 (LC 31)

FORCES (lb) - Maximum Compression/Maximum Tension
TOP CHORD 2-20=-44/56, 1-2=0/38, 2-3=-69/133, 3-4=-85/136, 4-5=-81/191, 5-6=-126/281, 6-7=-126/281, 7-8=-80/193, 8-9=-82/134, 9-10=-67/131, 10-11=0/38, 10-12=-43/55
BOT CHORD 19-20=-116/98, 18-19=-114/133, 17-18=-114/133, 16-17=-114/133, 15-16=-114/133, 14-15=-114/133, 13-14=-114/133, 12-13=-114/133
WEBS 6-16=-283/65, 5-17=-231/118, 4-18=-154/126, 3-19=-144/149, 7-15=-231/115, 8-14=-153/134, 9-13=-151/140

NOTES

1) Unbalanced roof live loads have been considered for this design.
2) Wind: ASCE 7-16; Vult=130mph (3-second gust) Vasd=103mph; TCDL=6.0psf; BCDL=6.0psf; h=25ft; Cat. II; Exp B; Enclosed; MWFRS (envelope) exterior zone and C-C Corner(3E) -0-10-8 to 2-1-8, Exterior(2N) 2-1-8 to 4-3-8, Corner(3R) 4-3-8 to 10-3-8, Exterior(2N) 10-3-8 to 12-5-8, Corner(3E) 12-5-8 to 15-5-8 zone; end vertical left and right exposed;C-C for members and forces & MWFRS for reactions shown; Lumber DOL=1.60 plate grip DOL=1.60
3) Truss designed for wind loads in the plane of the truss only. For studs exposed to wind (normal to the face), see Standard Industry Gable End Details as applicable, or consult qualified building designer as per ANSI/TPI 1.
4) TCLL: ASCE 7-16; Pr=20.0 psf (roof LL: Lum DOL=1.15 Plate DOL=1.15); Pf=20.0 psf (Lum DOL=1.15 Plate DOL=1.15); Is=1.0; Rough Cat B; Fully Exp.; Ce=0.9; Cs=1.00; Ct=1.10
5) Unbalanced snow loads have been considered for this design.
6) This truss has been designed for greater of min roof live load of 12.0 psf or 1.00 times flat roof load of 20.0 psf on overhangs non-concurrent with other live loads.
7) All plates are 2x4 MT20 unless otherwise indicated.
8) Truss to be fully sheathed from one face or securely braced against lateral movement (i.e. diagonal web).
9) Gable studs spaced at 2-0-0 oc.
10) This truss has been designed for a 10.0 psf bottom chord live load nonconcurrent with any other live loads.
11) * This truss has been designed for a live load of 20.0psf on the bottom chord in all areas where a rectangle 3-06-00 tall by 2-00-00 wide will fit between the bottom chord and any other members.
12) N/A
13) Non Standard bearing condition. Review required.
14) This truss is designed in accordance with the 2018 International Residential Code sections R502.11.1 and R802.10.2 and referenced standard ANSI/TPI 1.

LOAD CASE(S) Standard

June 16,2025

WARNING - Verify design parameters and READ NOTES ON THIS AND INCLUDED MITEK REFERENCE PAGE MII-7473 rev. 1/2/2023 BEFORE USE.
Design valid for use only with MiTek® connectors. This design is based only upon parameters shown, and is for an individual building component, not a truss system. Before use, the building designer must verify the applicability of design parameters and properly incorporate this design into the overall building design. Bracing indicated is to prevent buckling of individual truss web and/or chord members only. Additional temporary and permanent bracing is always required for stability and to prevent collapse with possible personal injury and property damage. For general guidance regarding the fabrication, storage, delivery, erection and bracing of trusses and truss systems, see **ANSI/TPI1 Quality Criteria and DSB-22** available from Truss Plate Institute (www.tpinst.org) and **BCSI Building Component Safety Information** available from the Structural Building Component Association (www.sbcacomponents.com)

ENGINEERING BY TRENCO A MiTek Affiliate
818 Soundside Road
Edenton, NC 27932

Job	Truss	Truss Type	Qty	Ply	926 Serenity-Roof-329 A CP GLH
25060033-01	G02	Common	4	1	I74200587 Job Reference (optional)

Carter Components (Sanford, NC), Sanford, NC - 27332, Run: 8.73 S Feb 19 2025 Print: 8.730 S Feb 19 2025 MiTek Industries, Inc. Fri Jun 13 10:53:31 Page: 1
ID:yXi_UOz?Sc_PgMaEgZ8rkWyiMjl-RfC?PsB70Hq3NSgPqnL8w3uITXbGKWrCDoi7J4zJC?f

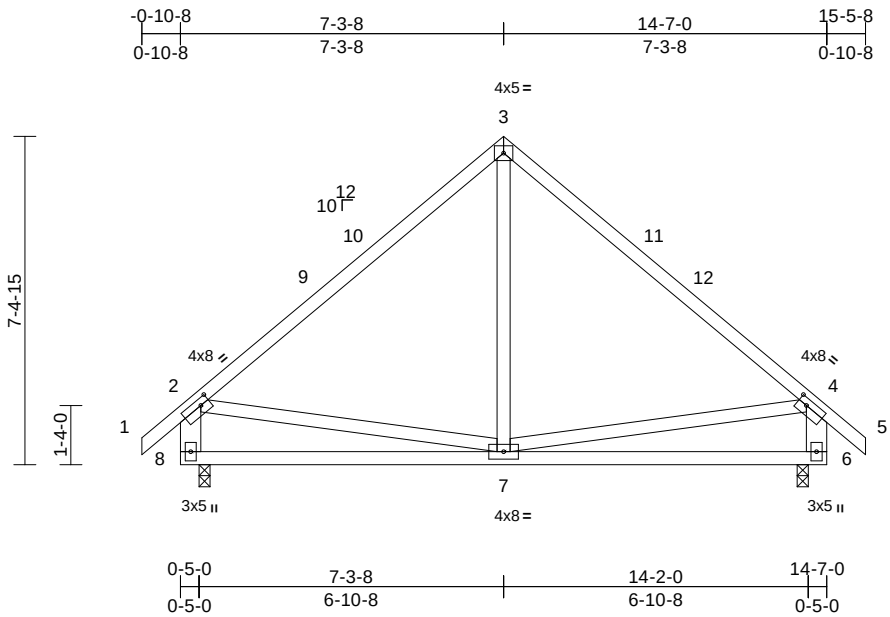

Scale = 1:52

Plate Offsets (X, Y): [2:0-2-8,0-1-12], [4:0-2-8,0-1-12]

Loading	(psf)	Spacing	2-0-0	CSI		DEFL	in	(loc)	l/defl	L/d	PLATES	GRIP
TCLL (roof)	20.0	Plate Grip DOL	1.15	TC	0.98	Vert(LL)	-0.05	7-8	>999	240	MT20	244/190
Snow (Pf)	20.0	Lumber DOL	1.15	BC	0.44	Vert(CT)	-0.10	7-8	>999	180		
TCDL	10.0	Rep Stress Incr	YES	WB	0.17	Horz(CT)	0.01	6	n/a	n/a		
BCLL	0.0*	Code	IRC2018/TPI2014	Matrix-MSH								
BCDL	10.0										Weight: 89 lb	FT = 20%

LUMBER
TOP CHORD 2x4 SP No.2
BOT CHORD 2x4 SP No.2
WEBS 2x4 SP No.3 *Except* 8-2,6-4:2x6 SP No.2

BRACING
TOP CHORD Structural wood sheathing directly applied, except end verticals.
BOT CHORD Rigid ceiling directly applied or 10-0-0 oc bracing.

REACTIONS (size) 6=0-3-0, 8=0-3-0
Max Horiz 8=201 (LC 13)
Max Uplift 6=-57 (LC 15), 8=-57 (LC 14)
Max Grav 6=705 (LC 22), 8=705 (LC 21)

FORCES (lb) - Maximum Compression/Maximum Tension
TOP CHORD 1-2=0/42, 2-3=-627/270, 3-4=-627/270, 4-5=0/42, 2-8=-643/266, 4-6=-643/260
BOT CHORD 7-8=-279/401, 6-7=-176/372
WEBS 3-7=-154/283, 2-7=-175/288, 4-7=-180/290

NOTES
1) Unbalanced roof live loads have been considered for this design.
2) Wind: ASCE 7-16; Vult=130mph (3-second gust) Vasd=103mph; TCDL=6.0psf; BCDL=6.0psf; h=25ft; Cat. II; Exp B; Enclosed; MWFRS (envelope) exterior zone and C-C Exterior(2E) -0-10-8 to 2-1-8, Interior (1) 2-1-8 to 4-3-8, Exterior(2R) 4-3-8 to 10-3-8, Interior (1) 10-3-8 to 12-5-8, Exterior(2E) 12-5-8 to 15-5-8 zone; end vertical left and right exposed; porch left and right exposed;C-C for members and forces & MWFRS for reactions shown; Lumber DOL=1.60 plate grip DOL=1.60
3) TCLL: ASCE 7-16; Pr=20.0 psf (roof LL: Lum DOL=1.15 Plate DOL=1.15); Pf=20.0 psf (Lum DOL=1.15 Plate DOL=1.15); Is=1.0; Rough Cat B; Fully Exp.; Ce=0.9; Cs=1.00; Ct=1.10
4) Unbalanced snow loads have been considered for this design.
5) This truss has been designed for greater of min roof live load of 12.0 psf or 1.00 times flat roof load of 20.0 psf on overhangs non-concurrent with other live loads.
6) This truss has been designed for a 10.0 psf bottom chord live load nonconcurrent with any other live loads.
7) * This truss has been designed for a live load of 20.0psf on the bottom chord in all areas where a rectangle 3-06-00 tall by 2-00-00 wide will fit between the bottom chord and any other members.
8) Provide mechanical connection (by others) of truss to bearing plate capable of withstanding 57 lb uplift at joint 8 and 57 lb uplift at joint 6.
9) This truss is designed in accordance with the 2018 International Residential Code sections R502.11.1 and R802.10.2 and referenced standard ANSI/TPI 1.

LOAD CASE(S) Standard

June 16,2025

WARNING - Verify design parameters and READ NOTES ON THIS AND INCLUDED MITEK REFERENCE PAGE MII-7473 rev. 1/2/2023 BEFORE USE.
Design valid for use only with MiTek® connectors. This design is based only upon parameters shown, and is for an individual building component, not a truss system. Before use, the building designer must verify the applicability of design parameters and properly incorporate this design into the overall building design. Bracing indicated is to prevent buckling of individual truss web and/or chord members only. Additional temporary and permanent bracing is always required for stability and to prevent collapse with possible personal injury and property damage. For general guidance regarding the fabrication, storage, delivery, erection and bracing of trusses and truss systems, see **ANSI/TPI1 Quality Criteria and DSB-22** available from Truss Plate Institute (www.tpinst.org) and **BCSI Building Component Safety Information** available from the Structural Building Component Association (www.sbcacomponents.com)

ENGINEERING BY TRENCO A MiTek Affiliate
818 Soundside Road
Edenton, NC 27932

Job	Truss	Truss Type	Qty	Ply	926 Serenity-Roof-329 A CP GLH
25060033-01	H01	Jack-Closed	2	1	I74200588 Job Reference (optional)

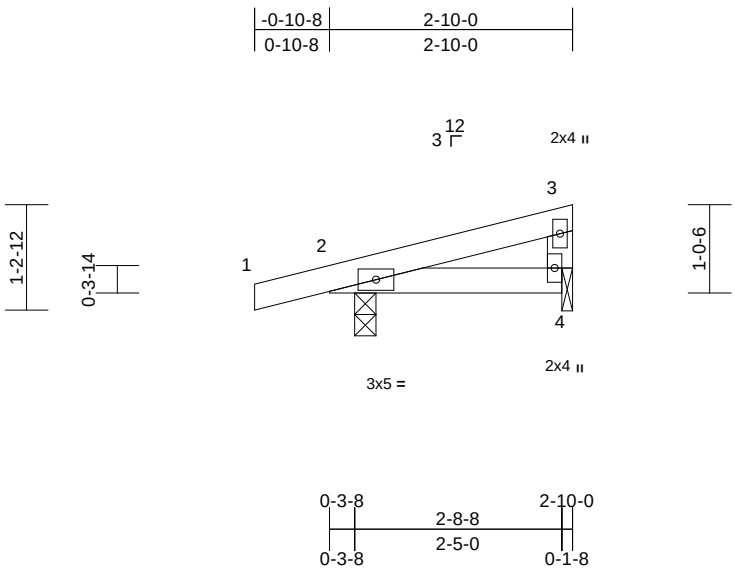

Scale = 1:26.9

Loading	(psf)	Spacing	1-11-4	CSI		DEFL	in	(loc)	l/defl	L/d	PLATES	GRIP
TCLL (roof)	20.0	Plate Grip DOL	1.15	TC	0.08	Vert(LL)	0.00	4-9	>999	240	MT20	244/190
Snow (Pf)	20.0	Lumber DOL	1.15	BC	0.06	Vert(CT)	0.00	4-9	>999	180		
TCDL	10.0	Rep Stress Incr	YES	WB	0.00	Horz(CT)	0.00	4	n/a	n/a		
BCLL	0.0*	Code	IRC2018/TPI2014	Matrix-MR								
BCDL	10.0										Weight: 10 lb	FT = 20%

LUMBER
TOP CHORD 2x4 SP No.2
BOT CHORD 2x4 SP No.2
OTHERS 2x4 SP No.3

BRACING
TOP CHORD Structural wood sheathing directly applied or 2-10-0 oc purlins.
BOT CHORD Rigid ceiling directly applied or 10-0-0 oc bracing.

REACTIONS (size) 2=0-3-0, 4=0-1-8
Max Horiz 2=34 (LC 10)
Max Uplift 2=-82 (LC 10), 4=-28 (LC 10)
Max Grav 2=238 (LC 21), 4=95 (LC 21)

FORCES (lb) - Maximum Compression/Maximum Tension
TOP CHORD 1-2=0/17, 2-3=-75/86, 3-4=-63/57
BOT CHORD 2-4=-79/93

NOTES
1) Wind: ASCE 7-16; Vult=130mph (3-second gust) Vasd=103mph; TCDL=6.0psf; BCDL=6.0psf; h=25ft; Cat. II; Exp B; Enclosed; MWFRS (envelope) exterior zone and C-C Exterior(2E) zone; porch left and right exposed;C-C for members and forces & MWFRS for reactions shown; Lumber DOL=1.60 plate grip DOL=1.60
2) Truss designed for wind loads in the plane of the truss only. For studs exposed to wind (normal to the face), see Standard Industry Gable End Details as applicable, or consult qualified building designer as per ANSI/TPI 1.
3) TCLL: ASCE 7-16; Pr=20.0 psf (roof LL: Lum DOL=1.15 Plate DOL=1.15); Pf=20.0 psf (Lum DOL=1.15 Plate DOL=1.15); Is=1.0; Rough Cat B; Fully Exp.; Ce=0.9; Cs=1.00; Ct=1.10
4) Unbalanced snow loads have been considered for this design.
5) This truss has been designed for greater of min roof live load of 12.0 psf or 1.00 times flat roof load of 20.0 psf on overhangs non-concurrent with other live loads.
6) Gable studs spaced at 2-0-0 oc.
7) This truss has been designed for a 10.0 psf bottom chord live load nonconcurrent with any other live loads.
8) * This truss has been designed for a live load of 20.0psf on the bottom chord in all areas where a rectangle 3-06-00 tall by 2-00-00 wide will fit between the bottom chord and any other members.
9) Bearings are assumed to be: , Joint 4 SP No.3 .
10) Bearing at joint(s) 4 considers parallel to grain value using ANSI/TPI 1 angle to grain formula. Building designer should verify capacity of bearing surface.
11) Provide mechanical connection (by others) of truss to bearing plate at joint(s) 4, 2.
12) One H2.5A Simpson Strong-Tie connectors recommended to connect truss to bearing walls due to UPLIFT at jt(s) 4 and 2. This connection is for uplift only and does not consider lateral forces.
13) This truss is designed in accordance with the 2018 International Residential Code sections R502.11.1 and R802.10.2 and referenced standard ANSI/TPI 1.

LOAD CASE(S) Standard

June 16,2025

WARNING - Verify design parameters and READ NOTES ON THIS AND INCLUDED MITEK REFERENCE PAGE MII-7473 rev. 1/2/2023 BEFORE USE.
Design valid for use only with MiTek® connectors. This design is based only upon parameters shown, and is for an individual building component, not a truss system. Before use, the building designer must verify the applicability of design parameters and properly incorporate this design into the overall building design. Bracing indicated is to prevent buckling of individual truss web and/or chord members only. Additional temporary and permanent bracing is always required for stability and to prevent collapse with possible personal injury and property damage. For general guidance regarding the fabrication, storage, delivery, erection and bracing of trusses and truss systems, see **ANSI/TPI1 Quality Criteria and DSB-22** available from Truss Plate Institute (www.tpinst.org) and **BCSI Building Component Safety Information** available from the Structural Building Component Association (www.sbcacomponents.com)

ENGINEERING BY TRENCO A MiTek Affiliate
818 Soundside Road
Edenton, NC 27932

Job	Truss	Truss Type	Qty	Ply	926 Serenity-Roof-329 A CP GLH
25060033-01	H02	Jack-Closed	9	1	I74200589 Job Reference (optional)

Carter Components (Sanford, NC), Sanford, NC - 27332,

Run: 8.73 S Feb 19 2025 Print: 8.730 S Feb 19 2025 MiTek Industries, Inc. Fri Jun 13 10:53:32 Page: 1
ID:JZY989jmNtkp0yAOw6RgmPyiMvh-RfC?PsB70Hq3NSgPqnL8w3uITXbGKWrCDoi7J4zJC?f

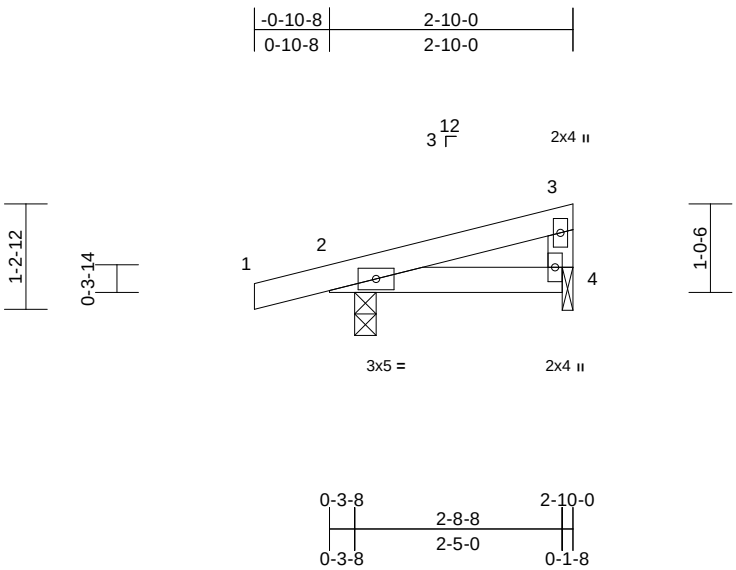

Scale = 1:26.8

Loading	(psf)	Spacing	2-0-0	CSI		DEFL	in	(loc)	l/defl	L/d	PLATES	GRIP
TCLL (roof)	20.0	Plate Grip DOL	1.15	TC	0.09	Vert(LL)	0.00	4-7	>999	240	MT20	244/190
Snow (Pf)	20.0	Lumber DOL	1.15	BC	0.10	Vert(CT)	-0.01	4-7	>999	180		
TCDL	10.0	Rep Stress Incr	YES	WB	0.00	Horz(CT)	0.00	2	n/a	n/a		
BCLL	0.0*	Code	IRC2018/TPI2014	Matrix-MP								
BCDL	10.0										Weight: 10 lb	FT = 20%

LUMBER
TOP CHORD 2x4 SP No.2
BOT CHORD 2x4 SP No.2
WEBS 2x4 SP No.3

BRACING
TOP CHORD Structural wood sheathing directly applied or 2-10-0 oc purlins, except end verticals.
BOT CHORD Rigid ceiling directly applied or 10-0-0 oc bracing.

REACTIONS (size) 2=0-3-0, 4=0-1-8
Max Horiz 2=35 (LC 10)
Max Uplift 2=-75 (LC 10), 4=-38 (LC 10)
Max Grav 2=219 (LC 21), 4=125 (LC 21)

FORCES (lb) - Maximum Compression/Maximum Tension
TOP CHORD 1-2=0/17, 2-3=-67/32, 3-4=-81/74
BOT CHORD 2-4=-48/51

NOTES
1) Wind: ASCE 7-16; Vult=130mph (3-second gust) Vasd=103mph; TCDL=6.0psf; BCDL=6.0psf; h=25ft; Cat. II; Exp B; Enclosed; MWFRS (envelope) exterior zone and C-C Exterior(2E) zone; porch left and right exposed;C-C for members and forces & MWFRS for reactions shown; Lumber DOL=1.60 plate grip DOL=1.60
2) TCLL: ASCE 7-16; Pr=20.0 psf (roof LL: Lum DOL=1.15 Plate DOL=1.15); Pf=20.0 psf (Lum DOL=1.15 Plate DOL=1.15); Is=1.0; Rough Cat B; Fully Exp.; Ce=0.9; Cs=1.00; Ct=1.10
3) Unbalanced snow loads have been considered for this design.
4) This truss has been designed for greater of min roof live load of 12.0 psf or 1.00 times flat roof load of 20.0 psf on overhangs non-concurrent with other live loads.
5) This truss has been designed for a 10.0 psf bottom chord live load nonconcurrent with any other live loads.
6) * This truss has been designed for a live load of 20.0psf on the bottom chord in all areas where a rectangle 3-06-00 tall by 2-00-00 wide will fit between the bottom chord and any other members.
7) Bearings are assumed to be: Joint 2 User Defined , Joint 4 SP No.3 .
8) Bearing at joint(s) 4 considers parallel to grain value using ANSI/TPI 1 angle to grain formula. Building designer should verify capacity of bearing surface.
9) Provide mechanical connection (by others) of truss to bearing plate at joint(s) 4.
10) One H2.5A Simpson Strong-Tie connectors recommended to connect truss to bearing walls due to UPLIFT at jt(s) 4 and 2. This connection is for uplift only and does not consider lateral forces.
11) This truss is designed in accordance with the 2018 International Residential Code sections R502.11.1 and R802.10.2 and referenced standard ANSI/TPI 1.

LOAD CASE(S) Standard

June 16,2025

WARNING - Verify design parameters and READ NOTES ON THIS AND INCLUDED MITEK REFERENCE PAGE MII-7473 rev. 1/2/2023 BEFORE USE.
Design valid for use only with MiTek® connectors. This design is based only upon parameters shown, and is for an individual building component, not a truss system. Before use, the building designer must verify the applicability of design parameters and properly incorporate this design into the overall building design. Bracing indicated is to prevent buckling of individual truss web and/or chord members only. Additional temporary and permanent bracing is always required for stability and to prevent collapse with possible personal injury and property damage. For general guidance regarding the fabrication, storage, delivery, erection and bracing of trusses and truss systems, see **ANSI/TPI1 Quality Criteria and DSB-22** available from Truss Plate Institute (www.tpinst.org) and **BCSI Building Component Safety Information** available from the Structural Building Component Association (www.sbcacomponents.com)

ENGINEERING BY TRENCO A MiTek Affiliate
818 Soundside Road
Edenton, NC 27932

Job	Truss	Truss Type	Qty	Ply	926 Serenity-Roof-329 A CP GLH
25060033-01	HJ57	Diagonal Hip Girder	1	1	I74200590 Job Reference (optional)

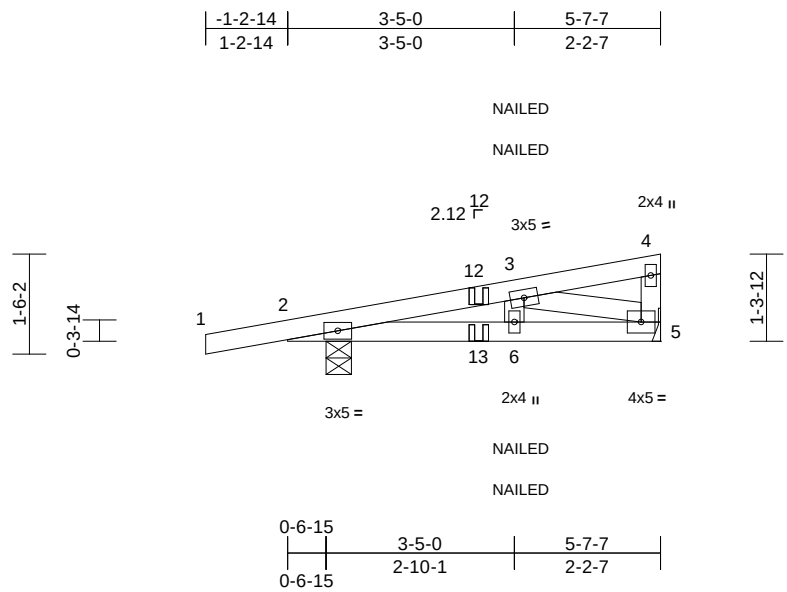

Scale = 1:34.7

Loading	(psf)	Spacing	2-0-0	CSI		DEFL	in	(loc)	l/defl	L/d	PLATES	GRIP
TCLL (roof)	20.0	Plate Grip DOL	1.15	TC	0.19	Vert(LL)	-0.01	6	>999	240	MT20	244/190
Snow (Pf)	20.0	Lumber DOL	1.15	BC	0.15	Vert(CT)	-0.01	6	>999	180		
TCDL	10.0	Rep Stress Incr	NO	WB	0.08	Horz(CT)	0.00	5	n/a	n/a		
BCLL	0.0*	Code	IRC2018/TPI2014	Matrix-MP								
BCDL	10.0										Weight: 23 lb	FT = 20%

LUMBER
TOP CHORD 2x4 SP No.2
BOT CHORD 2x4 SP No.2
WEBS 2x4 SP No.3

BRACING
TOP CHORD Structural wood sheathing directly applied or 5-7-7 oc purlins, except end verticals.
BOT CHORD Rigid ceiling directly applied or 10-0-0 oc bracing.

REACTIONS (size) 2=0-4-10, 5= Mechanical
Max Horiz 2=46 (LC 8)
Max Uplift 2=-147 (LC 8), 5=-66 (LC 8)
Max Grav 2=433 (LC 19), 5=219 (LC 19)

FORCES (lb) - Maximum Compression/Maximum Tension
TOP CHORD 1-2=0/17, 2-3=-382/243, 3-4=-15/11, 4-5=-78/25
BOT CHORD 2-6=-240/362, 5-6=-105/362
WEBS 3-6=-13/83, 3-5=-379/110

NOTES
1) Wind: ASCE 7-16; Vult=130mph (3-second gust) Vasd=103mph; TCDL=6.0psf; BCDL=6.0psf; h=25ft; Cat. II; Exp B; Enclosed; MWFRS (envelope) exterior zone; porch left and right exposed; Lumber DOL=1.60 plate grip DOL=1.60
2) TCLL: ASCE 7-16; Pr=20.0 psf (roof LL: Lum DOL=1.15 Plate DOL=1.15); Pf=20.0 psf (Lum DOL=1.15 Plate DOL=1.15); Is=1.0; Rough Cat B; Fully Exp.; Ce=0.9; Cs=1.00; Ct=1.10
3) Unbalanced snow loads have been considered for this design.
4) This truss has been designed for greater of min roof live load of 12.0 psf or 1.00 times flat roof load of 20.0 psf on overhangs non-concurrent with other live loads.
5) This truss has been designed for a 10.0 psf bottom chord live load nonconcurrent with any other live loads.
6) * This truss has been designed for a live load of 20.0psf on the bottom chord in all areas where a rectangle 3-06-00 tall by 2-00-00 wide will fit between the bottom chord and any other members.
7) All bearings are assumed to be User Defined .
8) Refer to girder(s) for truss to truss connections.
9) Provide mechanical connection (by others) of truss to bearing plate capable of withstanding 66 lb uplift at joint 5.
10) One H2.5A Simpson Strong-Tie connectors recommended to connect truss to bearing walls due to UPLIFT at jt(s) 2. This connection is for uplift only and does not consider lateral forces.
11) This truss is designed in accordance with the 2018 International Residential Code sections R502.11.1 and R802.10.2 and referenced standard ANSI/TPI 1.
12) "NAILED" indicates 3-10d (0.148"x3") or 2-12d (0.148"x3.25") toe-nails per NDS guidlines.
13) In the LOAD CASE(S) section, loads applied to the face of the truss are noted as front (F) or back (B).

LOAD CASE(S) Standard
1) Dead + Snow (balanced): Lumber Increase=1.15, Plate Increase=1.15
Uniform Loads (lb/ft)
Vert: 1-4=-60, 5-7=-20
Concentrated Loads (lb)
Vert: 13=2 (F=1, B=1)

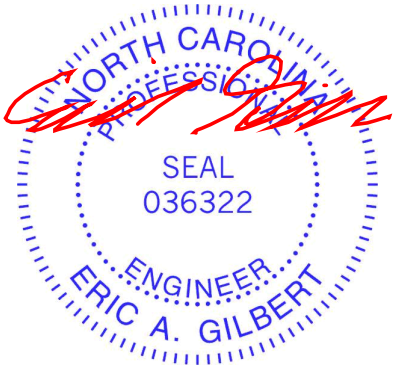

June 16,2025

WARNING - Verify design parameters and READ NOTES ON THIS AND INCLUDED MITEK REFERENCE PAGE MII-7473 rev. 1/2/2023 BEFORE USE.
Design valid for use only with MiTek® connectors. This design is based only upon parameters shown, and is for an individual building component, not a truss system. Before use, the building designer must verify the applicability of design parameters and properly incorporate this design into the overall building design. Bracing indicated is to prevent buckling of individual truss web and/or chord members only. Additional temporary and permanent bracing is always required for stability and to prevent collapse with possible personal injury and property damage. For general guidance regarding the fabrication, storage, delivery, erection and bracing of trusses and truss systems, see **ANSI/TPI1 Quality Criteria and DSB-22** available from Truss Plate Institute (www.tpinst.org) and **BCSI Building Component Safety Information** available from the Structural Building Component Association (www.sbcacomponents.com)

ENGINEERING BY TRENCO A MiTek Affiliate
818 Soundside Road
Edenton, NC 27932

Job	Truss	Truss Type	Qty	Ply	926 Serenity-Roof-329 A CP GLH
25060033-01	K02	Attic	3	1	I74200591 Job Reference (optional)

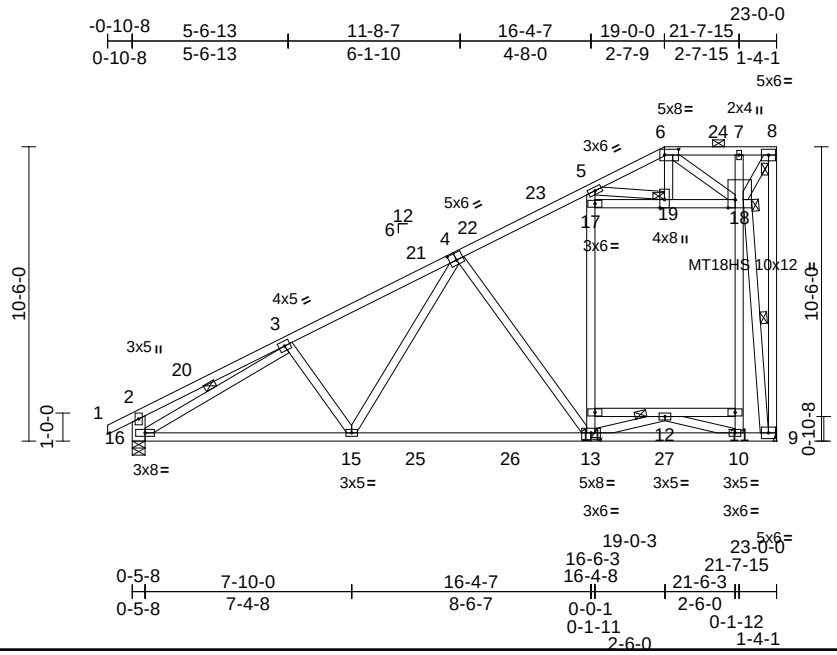

Scale = 1:82.2

Plate Offsets (X, Y): [4:0-3-0,0-3-0], [6:0-6-0,0-2-8], [13:0-4-0,0-3-0], [18:0-3-8,0-3-0], [19:0-3-8,0-2-0]

Loading	(psf)	Spacing	2-0-0	CSI		DEFL	in	(loc)	l/defl	L/d	PLATES	GRIP
TCLL (roof)	20.0	Plate Grip DOL	1.15	TC	0.79	Vert(LL)	-0.40	13-15	>679	240	MT20	244/190
Snow (Pf)	20.0	Lumber DOL	1.15	BC	0.83	Vert(CT)	-0.69	13-15	>394	180	MT18HS	244/190
TCDL	10.0	Rep Stress Incr	YES	WB	0.93	Horz(CT)	0.04	9	n/a	n/a		
BCLL	0.0*	Code	IRC2018/TPI2014	Matrix-MSH		Attic	0.12	11-14	>520	360		
BCDL	10.0										Weight: 202 lb	FT = 20%

LUMBER

TOP CHORD 2x4 SP No.2
BOT CHORD 2x4 SP No.2 *Except*
13-16:2x4 SP No.1
WEBS 2x4 SP No.3 *Except* 8-9,17-18:2x4 SP No.2, 5-13,7-10:2x4 SP No.1, 9-18:2x4 SP 2400F 2.0E, 16-2:2x6 SP No.2

BRACING

TOP CHORD Structural wood sheathing directly applied or 4-2-9 oc purlins, except end verticals, and 2-0-0 oc purlins (10-0-0 max.): 6-8.
BOT CHORD Rigid ceiling directly applied or 10-0-0 oc bracing, Except:
6-0-0 oc bracing: 12-14.
WEBS 1 Row at midpt 9-18, 3-16
JOINTS 1 Brace at Jt(s): 18, 8, 19, 12

REACTIONS (size) 9= Mechanical, 16=0-5-8
Max Horiz 16=352 (LC 14)
Max Uplift 16=-33 (LC 14)
Max Grav 9=1598 (LC 41), 16=1211 (LC 41)

FORCES (lb) - Maximum Compression/Maximum Tension
TOP CHORD 1-2=0/30, 2-3=-416/95, 3-5=-1768/21, 5-6=-75/984, 6-7=-158/2116, 7-8=-147/1931, 8-9=-226/2889, 2-16=-374/124
BOT CHORD 15-16=-306/1653, 10-15=-169/1317, 9-10=-29/665, 12-14=-533/36, 11-12=-31/513
WEBS 3-15=-159/188, 4-15=-59/552, 4-13=-761/213, 13-14=-34/755, 14-17=-15/930, 5-17=0/854, 10-11=0/600, 11-18=0/799, 7-18=-243/63, 9-18=-4801/207, 17-19=-51/773, 18-19=-1553/75, 3-16=-1496/0, 8-18=-3466/264, 6-18=-1577/140, 6-19=0/260, 5-19=-2351/125, 12-13=-199/295, 10-12=-1015/0

NOTES

1) Unbalanced roof live loads have been considered for this design.
2) Wind: ASCE 7-16; Vult=130mph (3-second gust) Vasd=103mph; TCDL=6.0psf; BCDL=6.0psf; h=25ft; Cat. II; Exp B; Enclosed; MWFRS (envelope) exterior zone and C-C Exterior(2E) -0-10-8 to 2-1-8, Interior (1) 2-1-8 to 14-9-1, Exterior(2R) 14-9-1 to 19-10-4, Exterior(2E) 19-10-4 to 22-10-4 zone; end vertical left exposed;C-C for members and forces & MWFRS for reactions shown; Lumber DOL=1.60 plate grip DOL=1.60
3) TCLL: ASCE 7-16; Pr=20.0 psf (roof LL: Lum DOL=1.15 Plate DOL=1.15); Pf=20.0 psf (Lum DOL=1.15 Plate DOL=1.15); Is=1.0; Rough Cat B; Fully Exp.; Ce=0.9; Cs=1.00; Ct=1.10
4) Unbalanced snow loads have been considered for this design.
5) This truss has been designed for greater of min roof live load of 12.0 psf or 1.00 times flat roof load of 20.0 psf on overhangs non-concurrent with other live loads.
6) Provide adequate drainage to prevent water ponding.
7) All plates are MT20 plates unless otherwise indicated.
8) This truss has been designed for a 10.0 psf bottom chord live load nonconcurrent with any other live loads.
9) * This truss has been designed for a live load of 20.0psf on the bottom chord in all areas where a rectangle 3-06-00 tall by 2-00-00 wide will fit between the bottom chord and any other members, with BCDL = 10.0psf.
10) Ceiling dead load (5.0 psf) on member(s). 17-19, 18-19; Wall dead load (5.0psf) on member(s).14-17, 11-18
11) Bottom chord live load (40.0 psf) and additional bottom chord dead load (5.0 psf) applied only to room. 12-14, 11-12
12) Refer to girder(s) for truss to truss connections.
13) Bearing at joint(s) 16 considers parallel to grain value using ANSI/TPI 1 angle to grain formula. Building designer should verify capacity of bearing surface.
14) One H2.5A Simpson Strong-Tie connectors recommended to connect truss to bearing walls due to UPLIFT at jt(s) 16. This connection is for uplift only and does not consider lateral forces.
15) This truss is designed in accordance with the 2018 International Residential Code sections R502.11.1 and R802.10.2 and referenced standard ANSI/TPI 1.
16) Graphical purlin representation does not depict the size or the orientation of the purlin along the top and/or bottom chord.
17) Attic room checked for L/360 deflection.

LOAD CASE(S) Standard

June 16,2025

WARNING - Verify design parameters and READ NOTES ON THIS AND INCLUDED MITEK REFERENCE PAGE MII-7473 rev. 1/2/2023 BEFORE USE.
Design valid for use only with MiTek® connectors. This design is based only upon parameters shown, and is for an individual building component, not a truss system. Before use, the building designer must verify the applicability of design parameters and properly incorporate this design into the overall building design. Bracing indicated is to prevent buckling of individual truss web and/or chord members only. Additional temporary and permanent bracing is always required for stability and to prevent collapse with possible personal injury and property damage. For general guidance regarding the fabrication, storage, delivery, erection and bracing of trusses and truss systems, see **ANSI/TPI1 Quality Criteria and DSB-22** available from Truss Plate Institute (www.tpinst.org) and **BCSI Building Component Safety Information** available from the Structural Building Component Association (www.sbcacomponents.com)

ENGINEERING BY TRENCO A MiTek Affiliate
818 Soundside Road
Edenton, NC 27932

Job	Truss	Truss Type	Qty	Ply	926 Serenity-Roof-329 A CP GLH
25060033-01	K01	Piggyback Base	1	1	I74200592 Job Reference (optional)

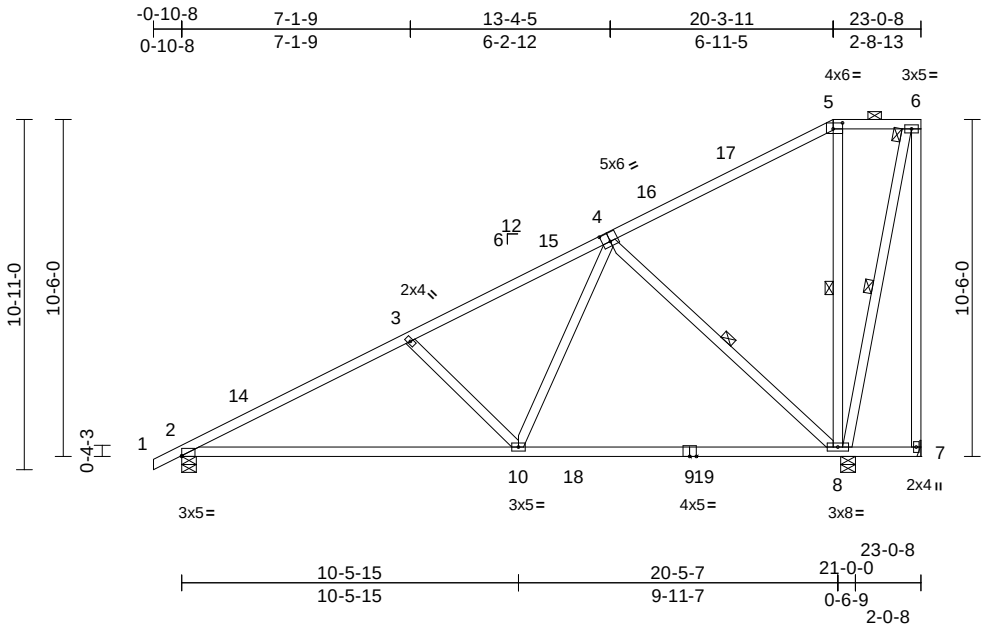

Scale = 1:71.8

Plate Offsets (X, Y): [2:Edge,0-0-4], [4:0-3-0,0-3-4], [5:0-3-8,0-2-4]

Loading	(psf)	Spacing	2-0-0	CSI		DEFL	in	(loc)	l/defl	L/d	PLATES	GRIP
TCLL (roof)	20.0	Plate Grip DOL	1.15	TC	0.83	Vert(LL)	-0.26	8-10	>950	240	MT20	244/190
Snow (Pf)	20.0	Lumber DOL	1.15	BC	0.87	Vert(CT)	-0.45	10-13	>546	180		
TCDL	10.0	Rep Stress Incr	YES	WB	0.53	Horz(CT)	0.03	8	n/a	n/a		
BCLL	0.0*	Code	IRC2018/TPI2014	Matrix-MSH								
BCDL	10.0										Weight: 150 lb	FT = 20%

LUMBER
TOP CHORD 2x4 SP No.2
BOT CHORD 2x4 SP No.1 *Except* 9-7:2x4 SP No.2
WEBS 2x4 SP No.3 *Except* 8-6:2x4 SP No.2

BRACING
TOP CHORD Structural wood sheathing directly applied or 3-1-13 oc purlins, except end verticals, and 2-0-0 oc purlins (10-0-0 max.): 5-6.
BOT CHORD Rigid ceiling directly applied or 6-0-0 oc bracing.
WEBS 1 Row at midpt 4-8, 5-8, 6-8

REACTIONS (size) 2=0-5-8, 7= Mechanical, 8=0-5-8
Max Horiz 2=387 (LC 14)
Max Uplift 2=-52 (LC 14), 7=-406 (LC 44), 8=-234 (LC 14)
Max Grav 2=915 (LC 40), 7=20 (LC 14), 8=1654 (LC 40)

FORCES (lb) - Maximum Compression/Maximum Tension
TOP CHORD 1-2=0/23, 2-3=-1430/42, 3-5=-1169/208, 5-6=-6/82, 6-7=-38/348
BOT CHORD 2-10=-327/1337, 8-10=-178/724, 7-8=-3/0
WEBS 4-8=-1095/249, 5-8=-428/170, 6-8=-343/27, 4-10=-24/823, 3-10=-438/200

NOTES
1) Unbalanced roof live loads have been considered for this design.
2) Wind: ASCE 7-16; Vult=130mph (3-second gust) Vasd=103mph; TCDL=6.0psf; BCDL=6.0psf; h=25ft; Cat. II; Exp B; Enclosed; MWFRS (envelope) exterior zone and C-C Exterior(2E) -0-10-8 to 2-1-8, Interior (1) 2-1-8 to 17-3-11, Exterior(2R) 17-3-11 to 20-3-11, Exterior(2E) 20-3-11 to 22-10-12 zone;C-C for members and forces & MWFRS for reactions shown; Lumber DOL=1.60 plate grip DOL=1.60
3) TCLL: ASCE 7-16; Pr=20.0 psf (roof LL: Lum DOL=1.15 Plate DOL=1.15); Pf=20.0 psf (Lum DOL=1.15 Plate DOL=1.15); Is=1.0; Rough Cat B; Fully Exp.; Ce=0.9; Cs=1.00; Ct=1.10
4) Unbalanced snow loads have been considered for this design.
5) This truss has been designed for greater of min roof live load of 12.0 psf or 1.00 times flat roof load of 20.0 psf on overhangs non-concurrent with other live loads.
6) Provide adequate drainage to prevent water ponding.
7) This truss has been designed for a 10.0 psf bottom chord live load nonconcurrent with any other live loads.
8) * This truss has been designed for a live load of 20.0psf on the bottom chord in all areas where a rectangle 3-06-00 tall by 2-00-00 wide will fit between the bottom chord and any other members, with BCDL = 10.0psf.
9) Refer to girder(s) for truss to truss connections.
10) Provide mechanical connection (by others) of truss to bearing plate capable of withstanding 406 lb uplift at joint 7.
11) One H2.5A Simpson Strong-Tie connectors recommended to connect truss to bearing walls due to UPLIFT at jt(s) 2 and 8. This connection is for uplift only and does not consider lateral forces.
12) This truss is designed in accordance with the 2018 International Residential Code sections R502.11.1 and R802.10.2 and referenced standard ANSI/TPI 1.
13) Graphical purlin representation does not depict the size or the orientation of the purlin along the top and/or bottom chord.

LOAD CASE(S) Standard

NORTH CAROLINA PROFESSIONAL SEAL 036322 ENGINEER ERIC A. GILBERT

June 16,2025

WARNING - Verify design parameters and READ NOTES ON THIS AND INCLUDED MITEK REFERENCE PAGE MII-7473 rev. 1/2/2023 BEFORE USE.
Design valid for use only with MiTek® connectors. This design is based only upon parameters shown, and is for an individual building component, not a truss system. Before use, the building designer must verify the applicability of design parameters and properly incorporate this design into the overall building design. Bracing indicated is to prevent buckling of individual truss web and/or chord members only. Additional temporary and permanent bracing is always required for stability and to prevent collapse with possible personal injury and property damage. For general guidance regarding the fabrication, storage, delivery, erection and bracing of trusses and truss systems, see **ANSI/TPI1 Quality Criteria and DSB-22** available from Truss Plate Institute (www.tpinst.org) and **BCSI Building Component Safety Information** available from the Structural Building Component Association (www.sbcacomponents.com)

ENGINEERING BY TRENCO A MiTek Affiliate
818 Soundside Road
Edenton, NC 27932

Job	Truss	Truss Type	Qty	Ply	926 Serenity-Roof-329 A CP GLH
25060033-01	L01	Monopitch	1	1	I74200593 Job Reference (optional)

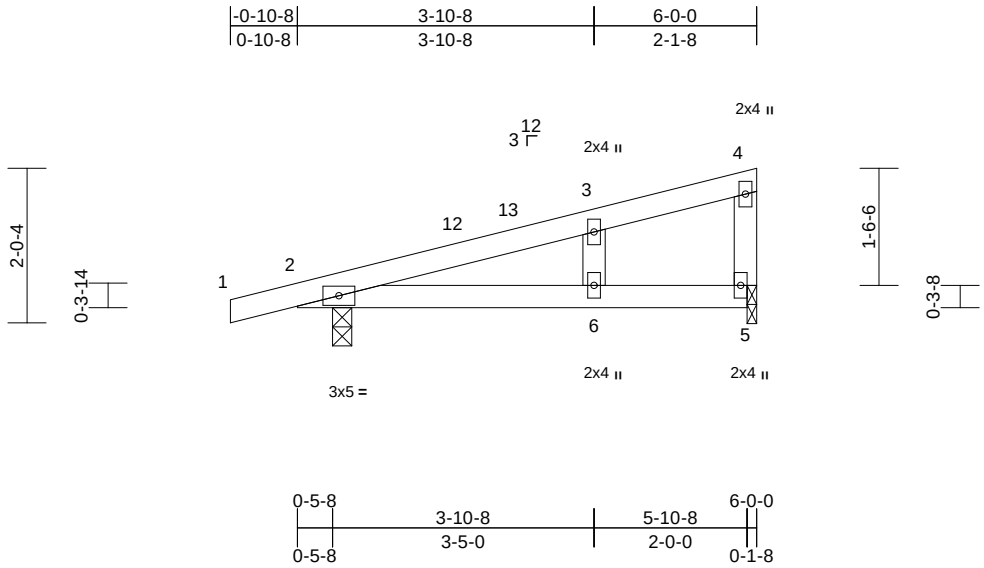

Scale = 1:30.1

Loading	(psf)	Spacing	1-11-4	CSI		DEFL	in	(loc)	l/defl	L/d	PLATES	GRIP
TCLL (roof)	20.0	Plate Grip DOL	1.15	TC	0.40	Vert(LL)	0.09	6-11	>816	240	MT20	244/190
Snow (Pf)	20.0	Lumber DOL	1.15	BC	0.45	Vert(CT)	-0.11	6-11	>614	180		
TCDL	10.0	Rep Stress Incr	YES	WB	0.02	Horz(CT)	0.00	2	n/a	n/a		
BCLL	0.0*	Code	IRC2018/TPI2014	Matrix-MP								
BCDL	10.0										Weight: 22 lb	FT = 20%

LUMBER

TOP CHORD	2x4 SP No.2
BOT CHORD	2x4 SP No.2
WEBS	2x4 SP No.3
OTHERS	2x4 SP No.3

BRACING

TOP CHORD	Structural wood sheathing directly applied or 6-0-0 oc purlins.
BOT CHORD	Rigid ceiling directly applied or 10-0-0 oc bracing.

REACTIONS (size) 2=0-3-0, 5=0-1-8
Max Horiz 2=62 (LC 10)
Max Uplift 2=-122 (LC 10), 5=-80 (LC 10)
Max Grav 2=407 (LC 21), 5=261 (LC 21)

FORCES (lb) - Maximum Compression/Maximum Tension

TOP CHORD	1-2=0/17, 2-3=-113/133, 3-4=-36/33, 4-5=-151/128
BOT CHORD	2-6=-128/136, 5-6=0/0
WEBS	3-6=-86/70

NOTES

1) Wind: ASCE 7-16; Vult=130mph (3-second gust) Vasd=103mph; TCDL=6.0psf; BCDL=6.0psf; h=25ft; Cat. II; Exp B; Enclosed; MWFRS (envelope) exterior zone and C-C Exterior(2E) -0-10-8 to 2-1-8, Interior (1) 2-1-8 to 2-10-4, Exterior(2E) 2-10-4 to 5-10-4 zone; porch left and right exposed;C-C for members and forces & MWFRS for reactions shown; Lumber DOL=1.60 plate grip DOL=1.60
2) TCLL: ASCE 7-16; Pr=20.0 psf (roof LL: Lum DOL=1.15 Plate DOL=1.15); Pf=20.0 psf (Lum DOL=1.15 Plate DOL=1.15); Is=1.0; Rough Cat B; Fully Exp.; Ce=0.9; Cs=1.00; Ct=1.10
3) Unbalanced snow loads have been considered for this design.
4) This truss has been designed for greater of min roof live load of 12.0 psf or 1.00 times flat roof load of 20.0 psf on overhangs non-concurrent with other live loads.
5) This truss has been designed for a 10.0 psf bottom chord live load nonconcurrent with any other live loads.
6) * This truss has been designed for a live load of 20.0psf on the bottom chord in all areas where a rectangle 3-06-00 tall by 2-00-00 wide will fit between the bottom chord and any other members.
7) Bearing at joint(s) 5 considers parallel to grain value using ANSI/TPI 1 angle to grain formula. Building designer should verify capacity of bearing surface.
8) Provide mechanical connection (by others) of truss to bearing plate at joint(s) 5.
9) One H2.5A Simpson Strong-Tie connectors recommended to connect truss to bearing walls due to UPLIFT at jt(s) 2 and 5. This connection is for uplift only and does not consider lateral forces.
10) This truss is designed in accordance with the 2018 International Residential Code sections R502.11.1 and R802.10.2 and referenced standard ANSI/TPI 1.

LOAD CASE(S) Standard

June 16,2025

WARNING - Verify design parameters and READ NOTES ON THIS AND INCLUDED MITEK REFERENCE PAGE MII-7473 rev. 1/2/2023 BEFORE USE.
Design valid for use only with MiTek® connectors. This design is based only upon parameters shown, and is for an individual building component, not a truss system. Before use, the building designer must verify the applicability of design parameters and properly incorporate this design into the overall building design. Bracing indicated is to prevent buckling of individual truss web and/or chord members only. Additional temporary and permanent bracing is always required for stability and to prevent collapse with possible personal injury and property damage. For general guidance regarding the fabrication, storage, delivery, erection and bracing of trusses and truss systems, see **ANSI/TPI1 Quality Criteria and DSB-22** available from Truss Plate Institute (www.tpinst.org) and **BCSI Building Component Safety Information** available from the Structural Building Component Association (www.sbcacomponents.com)

ENGINEERING BY TRENCO A MiTek Affiliate
818 Soundside Road
Edenton, NC 27932

Job	Truss	Truss Type	Qty	Ply	926 Serenity-Roof-329 A CP GLH
25060033-01	L02	Monopitch	8	1	I74200594 Job Reference (optional)

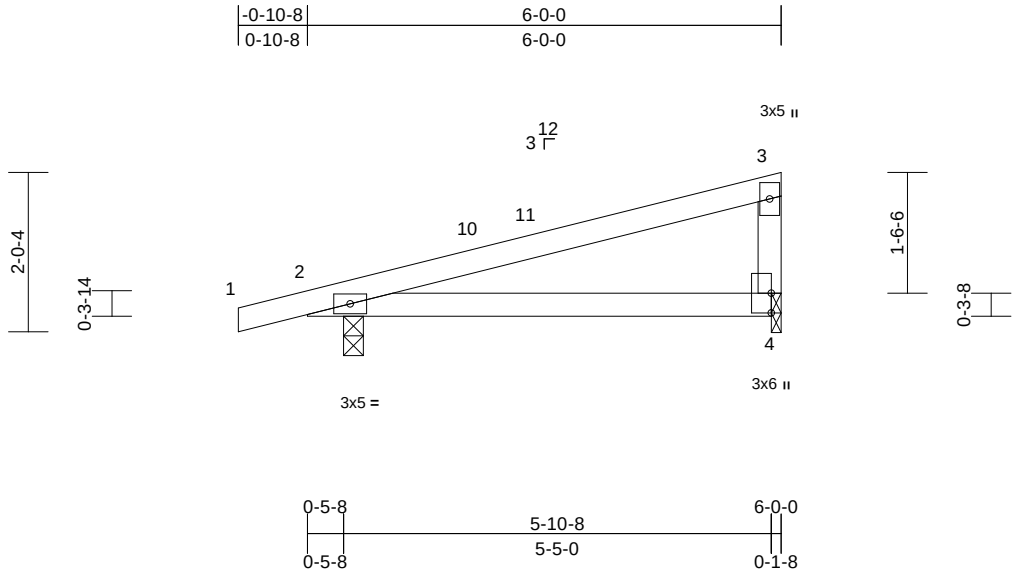

Scale = 1:29.2

Loading	(psf)	Spacing	2-0-0	CSI		DEFL	in	(loc)	l/defl	L/d	PLATES	GRIP
TCLL (roof)	20.0	Plate Grip DOL	1.15	TC	0.76	Vert(LL)	0.03	4-9	>999	240	MT20	244/190
Snow (Pf)	20.0	Lumber DOL	1.15	BC	0.29	Vert(CT)	-0.04	4-9	>999	180		
TCDL	10.0	Rep Stress Incr	YES	WB	0.00	Horz(CT)	0.00	4	n/a	n/a		
BCLL	0.0*	Code	IRC2018/TPI2014	Matrix-MR								
BCDL	10.0										Weight: 21 lb	FT = 20%

LUMBER
TOP CHORD 2x4 SP No.2
BOT CHORD 2x4 SP No.2
OTHERS 2x4 SP No.3

BRACING
TOP CHORD Structural wood sheathing directly applied or 6-0-0 oc purlins.
BOT CHORD Rigid ceiling directly applied or 10-0-0 oc bracing.

REACTIONS (size) 2=0-3-0, 4=0-1-8
Max Horiz 2=64 (LC 10)
Max Uplift 2=-126 (LC 10), 4=-83 (LC 10)
Max Grav 2=421 (LC 21), 4=269 (LC 21)

FORCES (lb) - Maximum Compression/Maximum Tension
TOP CHORD 1-2=0/18, 2-3=-245/137, 3-4=-180/151
BOT CHORD 2-4=-164/196

NOTES
1) Wind: ASCE 7-16; Vult=130mph (3-second gust) Vasd=103mph; TCDL=6.0psf; BCDL=6.0psf; h=25ft; Cat. II; Exp B; Enclosed; MWFRS (envelope) exterior zone and C-C Exterior(2E) -0-10-8 to 2-1-8, Interior (1) 2-1-8 to 2-10-4, Exterior(2E) 2-10-4 to 5-10-4 zone; porch left and right exposed;C-C for members and forces & MWFRS for reactions shown; Lumber DOL=1.60 plate grip DOL=1.60
2) TCLL: ASCE 7-16; Pr=20.0 psf (roof LL: Lum DOL=1.15 Plate DOL=1.15); Pf=20.0 psf (Lum DOL=1.15 Plate DOL=1.15); Is=1.0; Rough Cat B; Fully Exp.; Ce=0.9; Cs=1.00; Ct=1.10
3) Unbalanced snow loads have been considered for this design.
4) This truss has been designed for greater of min roof live load of 12.0 psf or 1.00 times flat roof load of 20.0 psf on overhangs non-concurrent with other live loads.
5) This truss has been designed for a 10.0 psf bottom chord live load nonconcurrent with any other live loads.
6) * This truss has been designed for a live load of 20.0psf on the bottom chord in all areas where a rectangle 3-06-00 tall by 2-00-00 wide will fit between the bottom chord and any other members.
7) Bearing at joint(s) 4 considers parallel to grain value using ANSI/TPI 1 angle to grain formula. Building designer should verify capacity of bearing surface.
8) Provide mechanical connection (by others) of truss to bearing plate at joint(s) 4.
9) One H2.5A Simpson Strong-Tie connectors recommended to connect truss to bearing walls due to UPLIFT at jt(s) 2 and 4. This connection is for uplift only and does not consider lateral forces.
10) This truss is designed in accordance with the 2018 International Residential Code sections R502.11.1 and R802.10.2 and referenced standard ANSI/TPI 1.

LOAD CASE(S) Standard

June 16,2025

WARNING - Verify design parameters and READ NOTES ON THIS AND INCLUDED MITEK REFERENCE PAGE MII-7473 rev. 1/2/2023 BEFORE USE.
Design valid for use only with MiTek® connectors. This design is based only upon parameters shown, and is for an individual building component, not a truss system. Before use, the building designer must verify the applicability of design parameters and properly incorporate this design into the overall building design. Bracing indicated is to prevent buckling of individual truss web and/or chord members only. Additional temporary and permanent bracing is always required for stability and to prevent collapse with possible personal injury and property damage. For general guidance regarding the fabrication, storage, delivery, erection and bracing of trusses and truss systems, see **ANSI/TPI1 Quality Criteria and DSB-22** available from Truss Plate Institute (www.tpinst.org) and **BCSI Building Component Safety Information** available from the Structural Building Component Association (www.sbcacomponents.com)

ENGINEERING BY TRENCO A MiTek Affiliate
818 Soundside Road
Edenton, NC 27932

Job	Truss	Truss Type	Qty	Ply	926 Serenity-Roof-329 A CP GLH
25060033-01	MH01	Half Hip Girder	1	1	I74200595 Job Reference (optional)

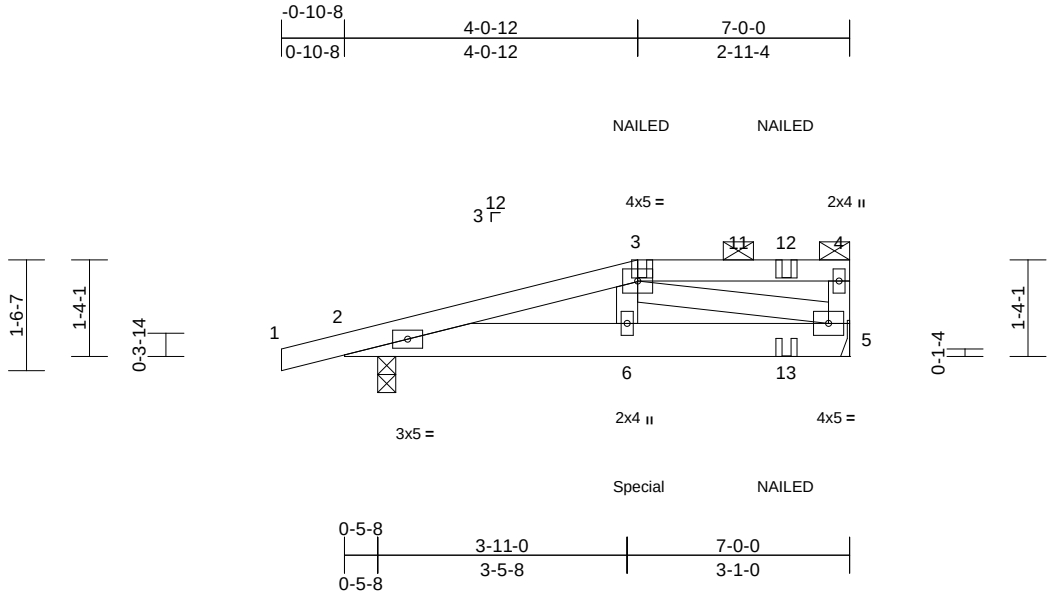

Scale = 1:31.9

Loading	(psf)	Spacing	2-0-0	CSI		DEFL	in	(loc)	l/defl	L/d	PLATES	GRIP
TCLL (roof)	20.0	Plate Grip DOL	1.15	TC	0.26	Vert(LL)	-0.01	6-10	>999	240	MT20	244/190
Snow (Pf)	20.0	Lumber DOL	1.15	BC	0.24	Vert(CT)	-0.02	6-10	>999	180		
TCDL	10.0	Rep Stress Incr	NO	WB	0.20	Horz(CT)	0.01	5	n/a	n/a		
BCLL	0.0*	Code	IRC2018/TPI2014	Matrix-MP								
BCDL	10.0										Weight: 34 lb	FT = 20%

LUMBER
TOP CHORD 2x4 SP No.2
BOT CHORD 2x6 SP No.2
WEBS 2x4 SP No.3

BRACING
TOP CHORD Structural wood sheathing directly applied or 6-0-0 oc purlins, except end verticals, and 2-0-0 oc purlins: 3-4.
BOT CHORD Rigid ceiling directly applied or 10-0-0 oc bracing.

REACTIONS (size) 2=0-3-0, 5= Mechanical
Max Horiz 2=49 (LC 51)
Max Uplift 2=-188 (LC 8), 5=-157 (LC 8)
Max Grav 2=571 (LC 34), 5=481 (LC 33)

FORCES (lb) - Maximum Compression/Maximum Tension
TOP CHORD 1-2=0/17, 2-3=-861/265, 3-4=0/0, 4-5=-148/47
BOT CHORD 2-6=-264/811, 5-6=-253/772
WEBS 3-6=-74/257, 3-5=-817/268

NOTES
1) Unbalanced roof live loads have been considered for this design.
2) Wind: ASCE 7-16; Vult=130mph (3-second gust) Vasd=103mph; TCDL=6.0psf; BCDL=6.0psf; h=25ft; Cat. II; Exp B; Enclosed; MWFRS (envelope) exterior zone; porch left and right exposed; Lumber DOL=1.60 plate grip DOL=1.60
3) TCLL: ASCE 7-16; Pr=20.0 psf (roof LL: Lum DOL=1.15 Plate DOL=1.15); Pf=20.0 psf (Lum DOL=1.15 Plate DOL=1.15); Is=1.0; Rough Cat B; Fully Exp.; Ce=0.9; Cs=1.00; Ct=1.10
4) Unbalanced snow loads have been considered for this design.
5) This truss has been designed for greater of min roof live load of 12.0 psf or 1.00 times flat roof load of 20.0 psf on overhangs non-concurrent with other live loads.
6) Provide adequate drainage to prevent water ponding.
7) This truss has been designed for a 10.0 psf bottom chord live load nonconcurrent with any other live loads.
8) * This truss has been designed for a live load of 20.0psf on the bottom chord in all areas where a rectangle 3-06-00 tall by 2-00-00 wide will fit between the bottom chord and any other members.
9) Refer to girder(s) for truss to truss connections.
10) Provide mechanical connection (by others) of truss to bearing plate capable of withstanding 157 lb uplift at joint 5.
11) One H2.5A Simpson Strong-Tie connectors recommended to connect truss to bearing walls due to UPLIFT at jt(s) 2. This connection is for uplift only and does not consider lateral forces.
12) This truss is designed in accordance with the 2018 International Residential Code sections R502.11.1 and R802.10.2 and referenced standard ANSI/TPI 1.
13) Graphical purlin representation does not depict the size or the orientation of the purlin along the top and/or bottom chord.
14) "NAILED" indicates 3-10d (0.148"x3") or 3-12d (0.148"x3.25") toe-nails per NDS guidlines.
15) Hanger(s) or other connection device(s) shall be provided sufficient to support concentrated load(s) 218 lb down and 108 lb up at 4-0-12 on bottom chord. The design/selection of such connection device(s) is the responsibility of others.
16) In the LOAD CASE(S) section, loads applied to the face of the truss are noted as front (F) or back (B).

LOAD CASE(S) Standard
1) Dead + Snow (balanced): Lumber Increase=1.15, Plate Increase=1.15
Uniform Loads (lb/ft)
Vert: 1-3=-60, 3-4=-60, 2-5=-20
Concentrated Loads (lb)
Vert: 6=-218 (B), 3=-59 (B), 12=-67 (B), 13=-30 (B)

June 16,2025

WARNING - Verify design parameters and READ NOTES ON THIS AND INCLUDED MITEK REFERENCE PAGE MII-7473 rev. 1/2/2023 BEFORE USE.
Design valid for use only with MiTek® connectors. This design is based only upon parameters shown, and is for an individual building component, not a truss system. Before use, the building designer must verify the applicability of design parameters and properly incorporate this design into the overall building design. Bracing indicated is to prevent buckling of individual truss web and/or chord members only. Additional temporary and permanent bracing is always required for stability and to prevent collapse with possible personal injury and property damage. For general guidance regarding the fabrication, storage, delivery, erection and bracing of trusses and truss systems, see **ANSI/TPI1 Quality Criteria and DSB-22** available from Truss Plate Institute (www.tpinst.org) and **BCSI Building Component Safety Information** available from the Structural Building Component Association (www.sbcacomponents.com)

ENGINEERING BY TRENCO A MiTek Affiliate
818 Soundside Road
Edenton, NC 27932

Job	Truss	Truss Type	Qty	Ply	926 Serenity-Roof-329 A CP GLH
25060033-01	MH02	Half Hip	1	1	I74200596 Job Reference (optional)

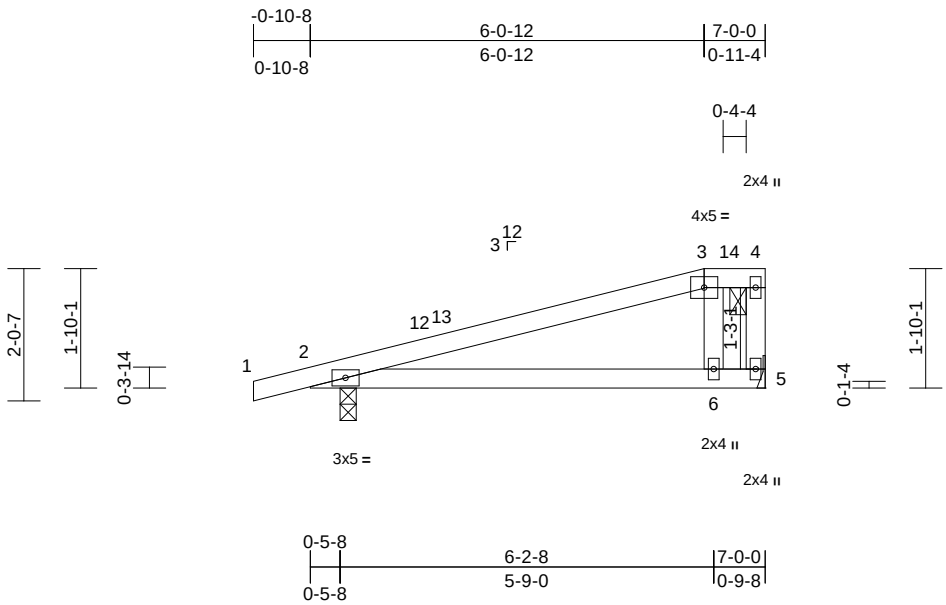

Scale = 1:35.5

Loading	(psf)	Spacing	2-0-0	CSI		DEFL	in	(loc)	l/defl	L/d	PLATES	GRIP
TCLL (roof)	20.0	Plate Grip DOL	1.15	TC	0.65	Vert(LL)	0.17	6-11	>494	240	MT20	244/190
Snow (Pf)	20.0	Lumber DOL	1.15	BC	0.60	Vert(CT)	-0.21	6-11	>389	180		
TCDL	10.0	Rep Stress Incr	YES	WB	0.05	Horz(CT)	0.00	2	n/a	n/a		
BCLL	0.0*	Code	IRC2018/TPI2014	Matrix-MP								
BCDL	10.0										Weight: 26 lb	FT = 20%

LUMBER
TOP CHORD 2x4 SP No.2
BOT CHORD 2x4 SP No.2
WEBS 2x4 SP No.3

BRACING
TOP CHORD Structural wood sheathing directly applied or 6-0-0 oc purlins, except end verticals, and 2-0-0 oc purlins: 3-4.
BOT CHORD Rigid ceiling directly applied or 10-0-0 oc bracing.

REACTIONS (size) 2=0-3-0, 5= Mechanical
Max Horiz 2=66 (LC 10)
Max Uplift 2=-141 (LC 10), 5=-98 (LC 10)
Max Grav 2=445 (LC 38), 5=273 (LC 38)

FORCES (lb) - Maximum Compression/Maximum Tension
TOP CHORD 1-2=0/17, 2-3=-113/128, 3-4=0/0, 4-5=-33/25
BOT CHORD 2-6=-124/136, 5-6=0/0
WEBS 3-6=-218/181

NOTES
1) Unbalanced roof live loads have been considered for this design.
2) Wind: ASCE 7-16; Vult=130mph (3-second gust) Vasd=103mph; TCDL=6.0psf; BCDL=6.0psf; h=25ft; Cat. II; Exp B; Enclosed; MWFRS (envelope) exterior zone and C-C Exterior(2E) -0-10-8 to 2-1-8, Exterior(2R) 2-1-8 to 6-0-12, Exterior(2E) 6-0-12 to 6-10-4 zone; porch left and right exposed;C-C for members and forces & MWFRS for reactions shown; Lumber DOL=1.60 plate grip DOL=1.60
3) TCLL: ASCE 7-16; Pr=20.0 psf (roof LL: Lum DOL=1.15 Plate DOL=1.15); Pf=20.0 psf (Lum DOL=1.15 Plate DOL=1.15); Is=1.0; Rough Cat B; Fully Exp.; Ce=0.9; Cs=1.00; Ct=1.10
4) Unbalanced snow loads have been considered for this design.
5) This truss has been designed for greater of min roof live load of 12.0 psf or 1.00 times flat roof load of 20.0 psf on overhangs non-concurrent with other live loads.
6) Provide adequate drainage to prevent water ponding.
7) This truss has been designed for a 10.0 psf bottom chord live load nonconcurrent with any other live loads.
8) * This truss has been designed for a live load of 20.0psf on the bottom chord in all areas where a rectangle 3-06-00 tall by 2-00-00 wide will fit between the bottom chord and any other members.
9) Refer to girder(s) for truss to truss connections.
10) Provide mechanical connection (by others) of truss to bearing plate capable of withstanding 98 lb uplift at joint 5.
11) One H2.5A Simpson Strong-Tie connectors recommended to connect truss to bearing walls due to UPLIFT at jt(s) 2. This connection is for uplift only and does not consider lateral forces.
12) This truss is designed in accordance with the 2018 International Residential Code sections R502.11.1 and R802.10.2 and referenced standard ANSI/TPI 1.
13) Graphical purlin representation does not depict the size or the orientation of the purlin along the top and/or bottom chord.

LOAD CASE(S) Standard

June 16,2025

WARNING - Verify design parameters and READ NOTES ON THIS AND INCLUDED MITEK REFERENCE PAGE MII-7473 rev. 1/2/2023 BEFORE USE.
Design valid for use only with MiTek® connectors. This design is based only upon parameters shown, and is for an individual building component, not a truss system. Before use, the building designer must verify the applicability of design parameters and properly incorporate this design into the overall building design. Bracing indicated is to prevent buckling of individual truss web and/or chord members only. Additional temporary and permanent bracing is always required for stability and to prevent collapse with possible personal injury and property damage. For general guidance regarding the fabrication, storage, delivery, erection and bracing of trusses and truss systems, see **ANSI/TPI1 Quality Criteria and DSB-22** available from Truss Plate Institute (www.tpinst.org) and **BCSI Building Component Safety Information** available from the Structural Building Component Association (www.sbcacomponents.com)

ENGINEERING BY TRENCO A MiTek Affiliate
818 Soundside Road
Edenton, NC 27932

Job	Truss	Truss Type	Qty	Ply	926 Serenity-Roof-329 A CP GLH
25060033-01	PBA	Piggyback	1	1	I74200597 Job Reference (optional)

Carter Components (Sanford, NC), Sanford, NC - 27332,

Run: 8.73 S Feb 19 2025 Print: 8.730 S Feb 19 2025 MiTek Industries, Inc. Fri Jun 13 10:53:33 Page: 1
ID:XgDf3INHPQvtHRF_HNdUzYyiJhY-RfC?PsB70Hq3NSgPqnL8w3uITXbGKWrCDoi7J4zJC?f

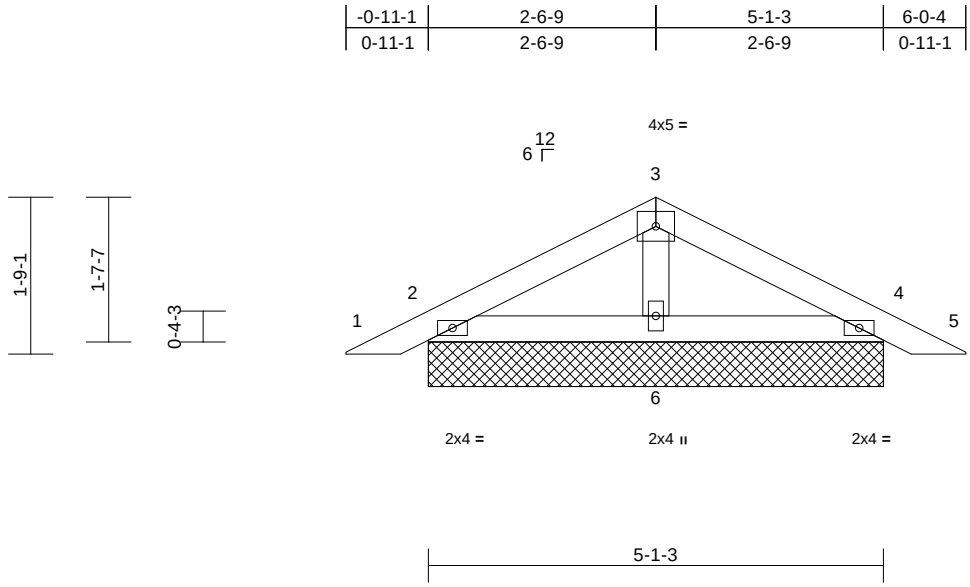

Scale = 1:25.8

Loading	(psf)	Spacing	2-0-0	CSI		DEFL	in	(loc)	l/defl	L/d	PLATES	GRIP
TCLL (roof)	20.0	Plate Grip DOL	1.15	TC	0.09	Vert(LL)	n/a	-	n/a	999	MT20	244/190
Snow (Pf)	20.0	Lumber DOL	1.15	BC	0.11	Vert(CT)	n/a	-	n/a	999		
TCDL	10.0	Rep Stress Incr	YES	WB	0.02	Horz(CT)	0.00	4	n/a	n/a		
BCLL	0.0*	Code	IRC2018/TPI2014	Matrix-MP								
BCDL	10.0										Weight: 21 lb	FT = 20%

LUMBER
TOP CHORD 2x4 SP No.2
BOT CHORD 2x4 SP No.2
OTHERS 2x4 SP No.3

BRACING
TOP CHORD Structural wood sheathing directly applied or 6-0-0 oc purlins.
BOT CHORD Rigid ceiling directly applied or 10-0-0 oc bracing.

REACTIONS (size) 2=5-1-3, 4=5-1-3, 6=5-1-3
Max Horiz 2=-25 (LC 19)
Max Uplift 2=-31 (LC 14), 4=-36 (LC 15), 6=-3 (LC 14)
Max Grav 2=199 (LC 21), 4=199 (LC 22), 6=197 (LC 21)

FORCES (lb) - Maximum Compression/Maximum Tension
TOP CHORD 1-2=0/24, 2-3=-59/58, 3-4=-59/58, 4-5=0/24
BOT CHORD 2-6=-5/36, 4-6=0/36
WEBS 3-6=-103/45

NOTES
1) Unbalanced roof live loads have been considered for this design.
2) Wind: ASCE 7-16; Vult=130mph (3-second gust) Vasd=103mph; TCDL=6.0psf; BCDL=6.0psf; h=25ft; Cat. II; Exp B; Enclosed; MWFRS (envelope) exterior zone and C-C Exterior(2E) zone; cantilever left and right exposed ; end vertical left and right exposed;C-C for members and forces & MWFRS for reactions shown; Lumber DOL=1.60 plate grip DOL=1.60
3) Truss designed for wind loads in the plane of the truss only. For studs exposed to wind (normal to the face), see Standard Industry Gable End Details as applicable, or consult qualified building designer as per ANSI/TPI 1.
4) TCLL: ASCE 7-16; Pr=20.0 psf (roof LL: Lum DOL=1.15 Plate DOL=1.15); Pf=20.0 psf (Lum DOL=1.15 Plate DOL=1.15); Is=1.0; Rough Cat B; Fully Exp.; Ce=0.9; Cs=1.00; Ct=1.10
5) Unbalanced snow loads have been considered for this design.
6) This truss has been designed for greater of min roof live load of 12.0 psf or 1.00 times flat roof load of 20.0 psf on overhangs non-concurrent with other live loads.
7) Gable requires continuous bottom chord bearing.
8) Gable studs spaced at 4-0-0 oc.
9) This truss has been designed for a 10.0 psf bottom chord live load nonconcurrent with any other live loads.
10) * This truss has been designed for a live load of 20.0psf on the bottom chord in all areas where a rectangle 3-06-00 tall by 2-00-00 wide will fit between the bottom chord and any other members.
11) N/A
12) This truss is designed in accordance with the 2018 International Residential Code sections R502.11.1 and R802.10.2 and referenced standard ANSI/TPI 1.
13) See Standard Industry Piggyback Truss Connection Detail for Connection to base truss as applicable, or consult qualified building designer.

LOAD CASE(S) Standard

NORTH CAROLINA PROFESSIONAL SEAL 036322 ENGINEER ERIC A. GILBERT

June 16,2025

WARNING - Verify design parameters and READ NOTES ON THIS AND INCLUDED MITEK REFERENCE PAGE MII-7473 rev. 1/2/2023 BEFORE USE.
Design valid for use only with MiTek® connectors. This design is based only upon parameters shown, and is for an individual building component, not a truss system. Before use, the building designer must verify the applicability of design parameters and properly incorporate this design into the overall building design. Bracing indicated is to prevent buckling of individual truss web and/or chord members only. Additional temporary and permanent bracing is always required for stability and to prevent collapse with possible personal injury and property damage. For general guidance regarding the fabrication, storage, delivery, erection and bracing of trusses and truss systems, see **ANSI/TPI1 Quality Criteria and DSB-22** available from Truss Plate Institute (www.tpinst.org) and **BCSI Building Component Safety Information** available from the Structural Building Component Association (www.sbcacomponents.com)

ENGINEERING BY TRENCO A MiTek Affiliate
818 Soundside Road
Edenton, NC 27932

Job	Truss	Truss Type	Qty	Ply	926 Serenity-Roof-329 A CP GLH
25060033-01	PBA1	Piggyback	8	1	I74200598 Job Reference (optional)

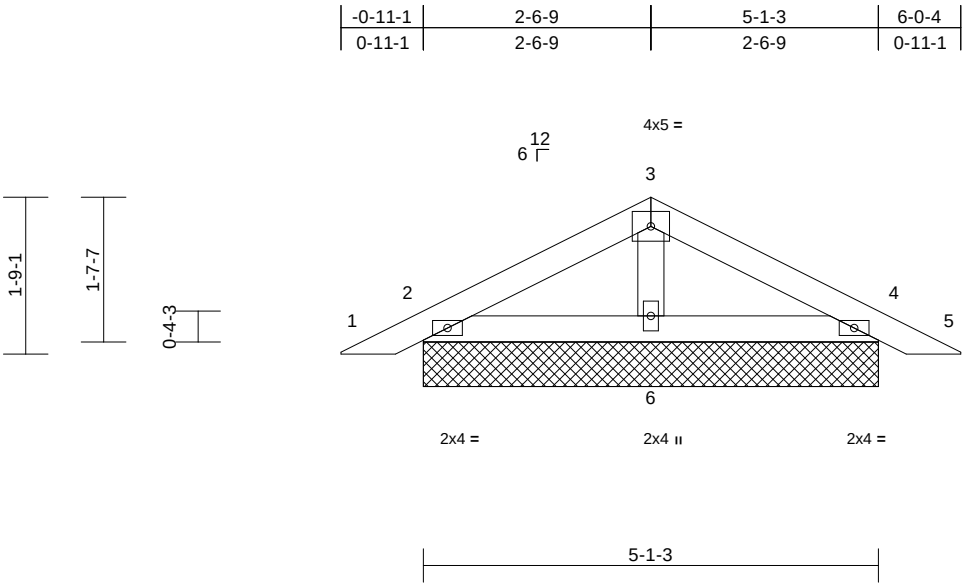

Scale = 1:25.8

Loading	(psf)	Spacing	2-0-0	CSI		DEFL	in	(loc)	l/defl	L/d	PLATES	GRIP
TCLL (roof)	20.0	Plate Grip DOL	1.15	TC	0.09	Vert(LL)	n/a	-	n/a	999	MT20	244/190
Snow (Pf)	20.0	Lumber DOL	1.15	BC	0.11	Vert(CT)	n/a	-	n/a	999		
TCDL	10.0	Rep Stress Incr	YES	WB	0.02	Horz(CT)	0.00	4	n/a	n/a		
BCLL	0.0*	Code	IRC2018/TPI2014	Matrix-MP								
BCDL	10.0										Weight: 21 lb	FT = 20%

LUMBER
TOP CHORD 2x4 SP No.2
BOT CHORD 2x4 SP No.2
OTHERS 2x4 SP No.3

BRACING
TOP CHORD Structural wood sheathing directly applied or 6-0-0 oc purlins.
BOT CHORD Rigid ceiling directly applied or 10-0-0 oc bracing.

REACTIONS (size) 2=5-1-3, 4=5-1-3, 6=5-1-3
Max Horiz 2=-25 (LC 19)
Max Uplift 2=-31 (LC 14), 4=-36 (LC 15), 6=-3 (LC 14)
Max Grav 2=199 (LC 21), 4=199 (LC 22), 6=197 (LC 21)

FORCES (lb) - Maximum Compression/Maximum Tension
TOP CHORD 1-2=0/24, 2-3=-59/58, 3-4=-59/58, 4-5=0/24
BOT CHORD 2-6=-5/36, 4-6=0/36
WEBS 3-6=-103/45

NOTES
1) Unbalanced roof live loads have been considered for this design.
2) Wind: ASCE 7-16; Vult=130mph (3-second gust) Vasd=103mph; TCDL=6.0psf; BCDL=6.0psf; h=25ft; Cat. II; Exp B; Enclosed; MWFRS (envelope) exterior zone and C-C Exterior(2E) zone; cantilever left and right exposed ; end vertical left and right exposed;C-C for members and forces & MWFRS for reactions shown; Lumber DOL=1.60 plate grip DOL=1.60
3) Truss designed for wind loads in the plane of the truss only. For studs exposed to wind (normal to the face), see Standard Industry Gable End Details as applicable, or consult qualified building designer as per ANSI/TPI 1.
4) TCLL: ASCE 7-16; Pr=20.0 psf (roof LL: Lum DOL=1.15 Plate DOL=1.15); Pf=20.0 psf (Lum DOL=1.15 Plate DOL=1.15); Is=1.0; Rough Cat B; Fully Exp.; Ce=0.9; Cs=1.00; Ct=1.10
5) Unbalanced snow loads have been considered for this design.
6) This truss has been designed for greater of min roof live load of 12.0 psf or 1.00 times flat roof load of 20.0 psf on overhangs non-concurrent with other live loads.
7) Gable requires continuous bottom chord bearing.
8) Gable studs spaced at 4-0-0 oc.
9) This truss has been designed for a 10.0 psf bottom chord live load nonconcurrent with any other live loads.
10) * This truss has been designed for a live load of 20.0psf on the bottom chord in all areas where a rectangle 3-06-00 tall by 2-00-00 wide will fit between the bottom chord and any other members.
11) N/A
12) This truss is designed in accordance with the 2018 International Residential Code sections R502.11.1 and R802.10.2 and referenced standard ANSI/TPI 1.
13) See Standard Industry Piggyback Truss Connection Detail for Connection to base truss as applicable, or consult qualified building designer.

LOAD CASE(S) Standard

June 16,2025

WARNING - Verify design parameters and READ NOTES ON THIS AND INCLUDED MITEK REFERENCE PAGE MII-7473 rev. 1/2/2023 BEFORE USE.
Design valid for use only with MiTek® connectors. This design is based only upon parameters shown, and is for an individual building component, not a truss system. Before use, the building designer must verify the applicability of design parameters and properly incorporate this design into the overall building design. Bracing indicated is to prevent buckling of individual truss web and/or chord members only. Additional temporary and permanent bracing is always required for stability and to prevent collapse with possible personal injury and property damage. For general guidance regarding the fabrication, storage, delivery, erection and bracing of trusses and truss systems, see **ANSI/TPI1 Quality Criteria and DSB-22** available from Truss Plate Institute (www.tpinst.org) and **BCSI Building Component Safety Information** available from the Structural Building Component Association (www.sbcacomponents.com)

ENGINEERING BY TRENCO A MiTek Affiliate
818 Soundside Road
Edenton, NC 27932

Job	Truss	Truss Type	Qty	Ply	926 Serenity-Roof-329 A CP GLH
25060033-01	PBA2	Piggyback	1	1	I74200599 Job Reference (optional)

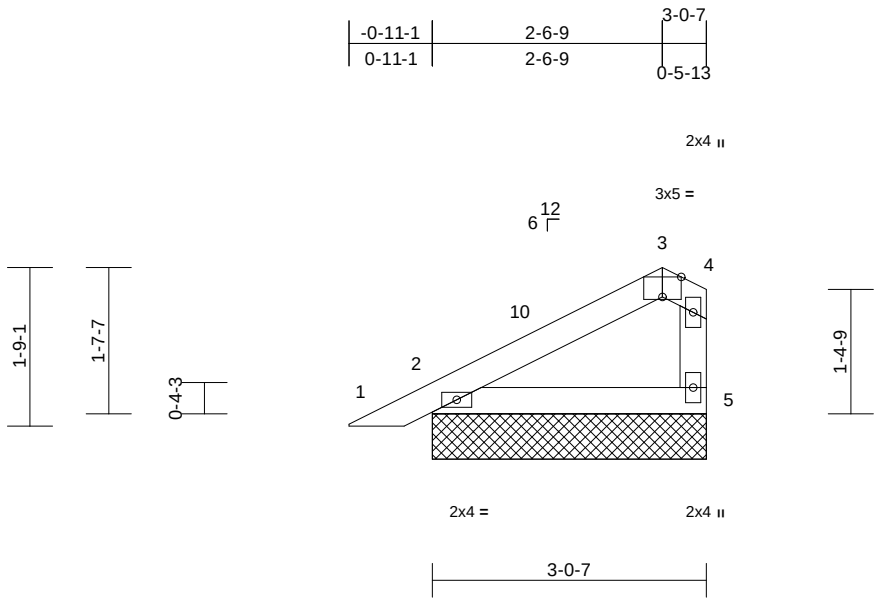

Scale = 1:25.5

Plate Offsets (X, Y): [3:0-2-8,Edge]

Loading	(psf)	Spacing	2-0-0	CSI		DEFL	in	(loc)	l/defl	L/d	PLATES	GRIP
TCLL (roof)	20.0	Plate Grip DOL	1.15	TC	0.12	Vert(LL)	n/a	-	n/a	999	MT20	244/190
Snow (Pf)	20.0	Lumber DOL	1.15	BC	0.07	Vert(CT)	n/a	-	n/a	999		
TCDL	10.0	Rep Stress Incr	YES	WB	0.00	Horz(CT)	0.00	5	n/a	n/a		
BCLL	0.0*	Code	IRC2018/TPI2014	Matrix-MR								
BCDL	10.0										Weight: 13 lb	FT = 20%

LUMBER
TOP CHORD 2x4 SP No.2
BOT CHORD 2x4 SP No.2
WEBS 2x4 SP No.3

BRACING
TOP CHORD Structural wood sheathing directly applied or 4-0-0 oc purlins, except end verticals.
BOT CHORD Rigid ceiling directly applied or 6-0-0 oc bracing.

REACTIONS (size) 2=3-0-7, 5=3-0-7
Max Horiz 2=53 (LC 14)
Max Uplift 2=-22 (LC 14), 5=-19 (LC 14)
Max Grav 2=161 (LC 21), 5=115 (LC 1)

FORCES (lb) - Maximum Compression/Maximum Tension
TOP CHORD 1-2=0/17, 2-3=-71/16, 3-4=-86/59, 4-5=-84/65
BOT CHORD 2-5=-54/54

NOTES
1) Unbalanced roof live loads have been considered for this design.
2) Wind: ASCE 7-16; Vult=130mph (3-second gust) Vasd=103mph; TCDL=6.0psf; BCDL=6.0psf; h=25ft; Cat. II; Exp B; Enclosed; MWFRS (envelope) exterior zone and C-C Exterior(2E) zone;C-C for members and forces & MWFRS for reactions shown; Lumber DOL=1.60 plate grip DOL=1.60
3) Truss designed for wind loads in the plane of the truss only. For studs exposed to wind (normal to the face), see Standard Industry Gable End Details as applicable, or consult qualified building designer as per ANSI/TPI 1.
4) TCLL: ASCE 7-16; Pr=20.0 psf (roof LL: Lum DOL=1.15 Plate DOL=1.15); Pf=20.0 psf (Lum DOL=1.15 Plate DOL=1.15); Is=1.0; Rough Cat B; Fully Exp.; Ce=0.9; Cs=1.00; Ct=1.10
5) Unbalanced snow loads have been considered for this design.
6) This truss has been designed for greater of min roof live load of 12.0 psf or 1.00 times flat roof load of 20.0 psf on overhangs non-concurrent with other live loads.
7) Gable requires continuous bottom chord bearing.
8) Gable studs spaced at 4-0-0 oc.
9) This truss has been designed for a 10.0 psf bottom chord live load nonconcurrent with any other live loads.
10) * This truss has been designed for a live load of 20.0psf on the bottom chord in all areas where a rectangle 3-06-00 tall by 2-00-00 wide will fit between the bottom chord and any other members.
11) N/A
12) This truss is designed in accordance with the 2018 International Residential Code sections R502.11.1 and R802.10.2 and referenced standard ANSI/TPI 1.
13) See Standard Industry Piggyback Truss Connection Detail for Connection to base truss as applicable, or consult qualified building designer.

LOAD CASE(S) Standard

June 16,2025

WARNING - Verify design parameters and READ NOTES ON THIS AND INCLUDED MITEK REFERENCE PAGE MII-7473 rev. 1/2/2023 BEFORE USE.
Design valid for use only with MiTek® connectors. This design is based only upon parameters shown, and is for an individual building component, not a truss system. Before use, the building designer must verify the applicability of design parameters and properly incorporate this design into the overall building design. Bracing indicated is to prevent buckling of individual truss web and/or chord members only. Additional temporary and permanent bracing is always required for stability and to prevent collapse with possible personal injury and property damage. For general guidance regarding the fabrication, storage, delivery, erection and bracing of trusses and truss systems, see **ANSI/TPI1 Quality Criteria and DSB-22** available from Truss Plate Institute (www.tpinst.org) and **BCSI Building Component Safety Information** available from the Structural Building Component Association (www.sbcacomponents.com)

ENGINEERING BY TRENCO A MiTek Affiliate
818 Soundside Road
Edenton, NC 27932

Job	Truss	Truss Type	Qty	Ply	926 Serenity-Roof-329 A CP GLH
25060033-01	PBA3	Piggyback	2	1	I74200600 Job Reference (optional)

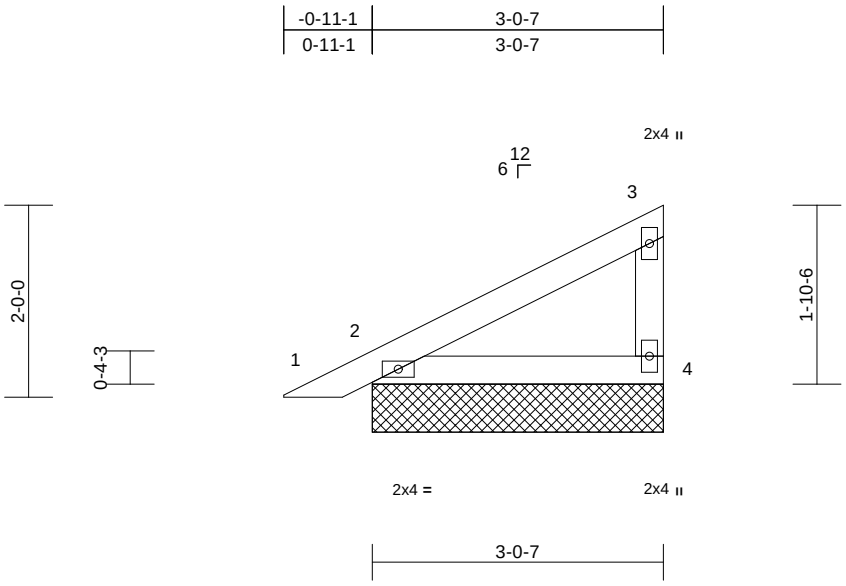

Scale = 1:24

Loading	(psf)	Spacing	2-0-0	CSI		DEFL	in	(loc)	l/defl	L/d	PLATES	GRIP
TCLL (roof)	20.0	Plate Grip DOL	1.15	TC	0.15	Vert(LL)	n/a	-	n/a	999	MT20	244/190
Snow (Pf)	20.0	Lumber DOL	1.15	BC	0.13	Vert(CT)	n/a	-	n/a	999		
TCDL	10.0	Rep Stress Incr	YES	WB	0.00	Horz(CT)	0.00	2	n/a	n/a		
BCLL	0.0*	Code	IRC2018/TPI2014	Matrix-MP								
BCDL	10.0										Weight: 13 lb	FT = 20%

LUMBER
TOP CHORD 2x4 SP No.2
BOT CHORD 2x4 SP No.2
WEBS 2x4 SP No.3

BRACING
TOP CHORD Structural wood sheathing directly applied or 4-0-0 oc purlins, except end verticals.
BOT CHORD Rigid ceiling directly applied or 10-0-0 oc bracing.

REACTIONS (size) 2=3-0-7, 4=3-0-7
Max Horiz 2=63 (LC 14)
Max Uplift 2=-18 (LC 14), 4=-29 (LC 14)
Max Grav 2=220 (LC 21), 4=156 (LC 21)

FORCES (lb) - Maximum Compression/Maximum Tension
TOP CHORD 1-2=0/25, 2-3=-49/38, 3-4=-106/74
BOT CHORD 2-4=-26/44

NOTES
1) Wind: ASCE 7-16; Vult=130mph (3-second gust) Vasd=103mph; TCDL=6.0psf; BCDL=6.0psf; h=25ft; Cat. II; Exp B; Enclosed; MWFRS (envelope) exterior zone and C-C Exterior(2E) zone;C-C for members and forces & MWFRS for reactions shown; Lumber DOL=1.60 plate grip DOL=1.60
2) Truss designed for wind loads in the plane of the truss only. For studs exposed to wind (normal to the face), see Standard Industry Gable End Details as applicable, or consult qualified building designer as per ANSI/TPI 1.
3) TCLL: ASCE 7-16; Pr=20.0 psf (roof LL: Lum DOL=1.15 Plate DOL=1.15); Pf=20.0 psf (Lum DOL=1.15 Plate DOL=1.15); Is=1.0; Rough Cat B; Fully Exp.; Ce=0.9; Cs=1.00; Ct=1.10
4) Unbalanced snow loads have been considered for this design.
5) This truss has been designed for greater of min roof live load of 12.0 psf or 1.00 times flat roof load of 20.0 psf on overhangs non-concurrent with other live loads.
6) Gable requires continuous bottom chord bearing.
7) Gable studs spaced at 4-0-0 oc.
8) This truss has been designed for a 10.0 psf bottom chord live load nonconcurrent with any other live loads.
9) * This truss has been designed for a live load of 20.0psf on the bottom chord in all areas where a rectangle 3-06-00 tall by 2-00-00 wide will fit between the bottom chord and any other members.
10) N/A
11) This truss is designed in accordance with the 2018 International Residential Code sections R502.11.1 and R802.10.2 and referenced standard ANSI/TPI 1.
12) See Standard Industry Piggyback Truss Connection Detail for Connection to base truss as applicable, or consult qualified building designer.

LOAD CASE(S) Standard

June 16,2025

WARNING - Verify design parameters and READ NOTES ON THIS AND INCLUDED MITEK REFERENCE PAGE MII-7473 rev. 1/2/2023 BEFORE USE.
Design valid for use only with MiTek® connectors. This design is based only upon parameters shown, and is for an individual building component, not a truss system. Before use, the building designer must verify the applicability of design parameters and properly incorporate this design into the overall building design. Bracing indicated is to prevent buckling of individual truss web and/or chord members only. Additional temporary and permanent bracing is always required for stability and to prevent collapse with possible personal injury and property damage. For general guidance regarding the fabrication, storage, delivery, erection and bracing of trusses and truss systems, see **ANSI/TPI1 Quality Criteria and DSB-22** available from Truss Plate Institute (www.tpinst.org) and **BCSI Building Component Safety Information** available from the Structural Building Component Association (www.sbcacomponents.com)

ENGINEERING BY TRENCO A MiTek Affiliate
818 Soundside Road
Edenton, NC 27932

Job	Truss	Truss Type	Qty	Ply	926 Serenity-Roof-329 A CP GLH
25060033-01	PBA4	Piggyback	1	1	I74200601 Job Reference (optional)

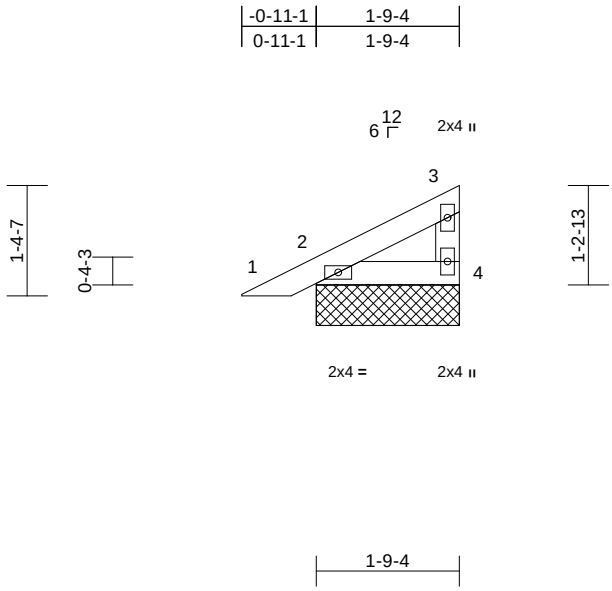

Scale = 1:28.5

Loading	(psf)	Spacing	2-0-0	CSI		DEFL	in	(loc)	l/defl	L/d	PLATES	GRIP
TCLL (roof)	20.0	Plate Grip DOL	1.15	TC	0.04	Vert(LL)	n/a	-	n/a	999	MT20	244/190
Snow (Pf)	20.0	Lumber DOL	1.15	BC	0.03	Vert(CT)	n/a	-	n/a	999		
TCDL	10.0	Rep Stress Incr	YES	WB	0.00	Horz(CT)	0.00	2	n/a	n/a		
BCLL	0.0*	Code	IRC2018/TPI2014	Matrix-MP								
BCDL	10.0										Weight: 8 lb	FT = 20%

LUMBER
TOP CHORD 2x4 SP No.2
BOT CHORD 2x4 SP No.2
WEBS 2x4 SP No.3

BRACING
TOP CHORD Structural wood sheathing directly applied or 2-8-13 oc purlins, except end verticals.
BOT CHORD Rigid ceiling directly applied or 10-0-0 oc bracing.

REACTIONS (size) 2=1-9-4, 4=1-9-4
Max Horiz 2=40 (LC 14)
Max Uplift 2=-17 (LC 14), 4=-14 (LC 14)
Max Grav 2=146 (LC 21), 4=78 (LC 21)

FORCES (lb) - Maximum Compression/Maximum Tension
TOP CHORD 1-2=0/23, 2-3=-23/19, 3-4=-50/35
BOT CHORD 2-4=-5/21

NOTES
1) Wind: ASCE 7-16; Vult=130mph (3-second gust) Vasd=103mph; TCDL=6.0psf; BCDL=6.0psf; h=25ft; Cat. II; Exp B; Enclosed; MWFRS (envelope) exterior zone and C-C Exterior(2E) zone;C-C for members and forces & MWFRS for reactions shown; Lumber DOL=1.60 plate grip DOL=1.60
2) Truss designed for wind loads in the plane of the truss only. For studs exposed to wind (normal to the face), see Standard Industry Gable End Details as applicable, or consult qualified building designer as per ANSI/TPI 1.
3) TCLL: ASCE 7-16; Pr=20.0 psf (roof LL: Lum DOL=1.15 Plate DOL=1.15); Pf=20.0 psf (Lum DOL=1.15 Plate DOL=1.15); Is=1.0; Rough Cat B; Fully Exp.; Ce=0.9; Cs=1.00; Ct=1.10
4) Unbalanced snow loads have been considered for this design.
5) This truss has been designed for greater of min roof live load of 12.0 psf or 1.00 times flat roof load of 20.0 psf on overhangs non-concurrent with other live loads.
6) Gable requires continuous bottom chord bearing.
7) Gable studs spaced at 4-0-0 oc.
8) This truss has been designed for a 10.0 psf bottom chord live load nonconcurrent with any other live loads.
9) * This truss has been designed for a live load of 20.0psf on the bottom chord in all areas where a rectangle 3-06-00 tall by 2-00-00 wide will fit between the bottom chord and any other members.
10) N/A
11) This truss is designed in accordance with the 2018 International Residential Code sections R502.11.1 and R802.10.2 and referenced standard ANSI/TPI 1.
12) See Standard Industry Piggyback Truss Connection Detail for Connection to base truss as applicable, or consult qualified building designer.

LOAD CASE(S) Standard

June 16,2025

WARNING - Verify design parameters and READ NOTES ON THIS AND INCLUDED MITEK REFERENCE PAGE MII-7473 rev. 1/2/2023 BEFORE USE.
Design valid for use only with MiTek® connectors. This design is based only upon parameters shown, and is for an individual building component, not a truss system. Before use, the building designer must verify the applicability of design parameters and properly incorporate this design into the overall building design. Bracing indicated is to prevent buckling of individual truss web and/or chord members only. Additional temporary and permanent bracing is always required for stability and to prevent collapse with possible personal injury and property damage. For general guidance regarding the fabrication, storage, delivery, erection and bracing of trusses and truss systems, see **ANSI/TPI1 Quality Criteria and DSB-22** available from Truss Plate Institute (www.tpinst.org) and **BCSI Building Component Safety Information** available from the Structural Building Component Association (www.sbcacomponents.com)

ENGINEERING BY TRENCO A MiTek Affiliate
818 Soundside Road
Edenton, NC 27932

Job	Truss	Truss Type	Qty	Ply	926 Serenity-Roof-329 A CP GLH
25060033-01	VLB1	Valley	1	1	I74200602 Job Reference (optional)

Carter Components (Sanford, NC), Sanford, NC - 27332, Run: 8.73 S Feb 19 2025 Print: 8.730 S Feb 19 2025 MiTek Industries, Inc. Fri Jun 13 10:53:33 Page: 1
ID:a0pNIiPOyflMIS7TQY13RbyiMPp-RfC?PsB70Hq3NSgPqnL8w3uITXbGKWrCDoi7J4zJC?f

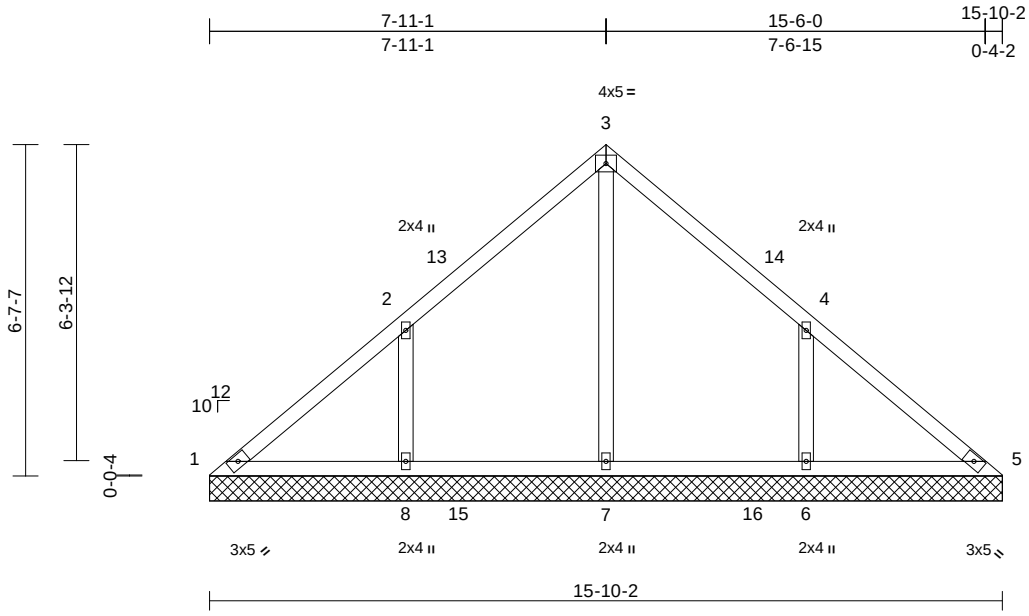

Scale = 1:46

Loading	(psf)	Spacing	2-0-0	CSI		DEFL	in	(loc)	l/defl	L/d	PLATES	GRIP
TCLL (roof)	20.0	Plate Grip DOL	1.15	TC	0.32	Vert(LL)	n/a	-	n/a	999	MT20	244/190
Snow (Pf)	20.0	Lumber DOL	1.15	BC	0.16	Vert(TL)	n/a	-	n/a	999		
TCDL	10.0	Rep Stress Incr	YES	WB	0.20	Horiz(TL)	0.00	5	n/a	n/a		
BCLL	0.0*	Code	IRC2018/TPI2014	Matrix-MSH								
BCDL	10.0										Weight: 70 lb	FT = 20%

LUMBER
TOP CHORD 2x4 SP No.2
BOT CHORD 2x4 SP No.2
OTHERS 2x4 SP No.3

BRACING
TOP CHORD Structural wood sheathing directly applied or 6-0-0 oc purlins.
BOT CHORD Rigid ceiling directly applied or 6-0-0 oc bracing.

REACTIONS (size) 1=15-10-2, 5=15-10-2, 6=15-10-2, 7=15-10-2, 8=15-10-2
Max Horiz 1=-151 (LC 10)
Max Uplift 1=-22 (LC 10), 6=-170 (LC 15), 8=-173 (LC 14)
Max Grav 1=127 (LC 30), 5=104 (LC 21), 6=485 (LC 6), 7=455 (LC 24), 8=485 (LC 5)

FORCES (lb) - Maximum Compression/Maximum Tension
TOP CHORD 1-2=-151/199, 2-3=-140/156, 3-4=-140/136, 4-5=-124/160
BOT CHORD 1-8=-91/134, 7-8=-91/120, 6-7=-91/120, 5-6=-91/120
WEBS 3-7=-267/0, 2-8=-384/208, 4-6=-384/207

NOTES
1) Unbalanced roof live loads have been considered for this design.
2) Wind: ASCE 7-16; Vult=130mph (3-second gust) Vasd=103mph; TCDL=6.0psf; BCDL=6.0psf; h=25ft; Cat. II; Exp B; Enclosed; MWFRS (envelope) exterior zone and C-C Exterior(2E) 0-0-5 to 3-0-5, Interior (1) 3-0-5 to 4-11-6, Exterior(2R) 4-11-6 to 10-11-6, Interior (1) 10-11-6 to 12-10-6, Exterior(2E) 12-10-6 to 15-10-6 zone; cantilever left and right exposed ; end vertical left and right exposed;C-C for members and forces & MWFRS for reactions shown; Lumber DOL=1.60 plate grip DOL=1.60
3) Truss designed for wind loads in the plane of the truss only. For studs exposed to wind (normal to the face), see Standard Industry Gable End Details as applicable, or consult qualified building designer as per ANSI/TPI 1.
4) TCLL: ASCE 7-16; Pr=20.0 psf (roof LL: Lum DOL=1.15 Plate DOL=1.15); Pf=20.0 psf (Lum DOL=1.15 Plate DOL=1.15); Is=1.0; Rough Cat B; Fully Exp.; Ce=0.9; Cs=1.00; Ct=1.10
5) Unbalanced snow loads have been considered for this design.
6) Gable requires continuous bottom chord bearing.
7) Gable studs spaced at 4-0-0 oc.
8) This truss has been designed for a 10.0 psf bottom chord live load nonconcurrent with any other live loads.
9) * This truss has been designed for a live load of 20.0psf on the bottom chord in all areas where a rectangle 3-06-00 tall by 2-00-00 wide will fit between the bottom chord and any other members, with BCDL = 10.0psf.
10) Provide mechanical connection (by others) of truss to bearing plate capable of withstanding 22 lb uplift at joint 1, 173 lb uplift at joint 8 and 170 lb uplift at joint 6.
11) This truss is designed in accordance with the 2018 International Residential Code sections R502.11.1 and R802.10.2 and referenced standard ANSI/TPI 1.

LOAD CASE(S) Standard

June 16,2025

WARNING - Verify design parameters and READ NOTES ON THIS AND INCLUDED MITEK REFERENCE PAGE MII-7473 rev. 1/2/2023 BEFORE USE.
Design valid for use only with MiTek® connectors. This design is based only upon parameters shown, and is for an individual building component, not a truss system. Before use, the building designer must verify the applicability of design parameters and properly incorporate this design into the overall building design. Bracing indicated is to prevent buckling of individual truss web and/or chord members only. Additional temporary and permanent bracing is always required for stability and to prevent collapse with possible personal injury and property damage. For general guidance regarding the fabrication, storage, delivery, erection and bracing of trusses and truss systems, see **ANSI/TPI1 Quality Criteria and DSB-22** available from Truss Plate Institute (www.tpinst.org) and **BCSI Building Component Safety Information** available from the Structural Building Component Association (www.sbcacomponents.com)

ENGINEERING BY TRENCO A MiTek Affiliate
818 Soundside Road
Edenton, NC 27932

Job	Truss	Truss Type	Qty	Ply	926 Serenity-Roof-329 A CP GLH
25060033-01	VLB2	Valley	1	1	I74200603 Job Reference (optional)

Carter Components (Sanford, NC), Sanford, NC - 27332,

Run: 8.73 S Feb 19 2025 Print: 8.730 S Feb 19 2025 MiTek Industries, Inc. Fri Jun 13 10:53:33 Page: 1
ID:?s0wUXfxFoGW9XfJblOlFpyiMPV-RfC?PsB70Hq3NSgPqnL8w3uITXbGKWrCDoi7J4zJC?f

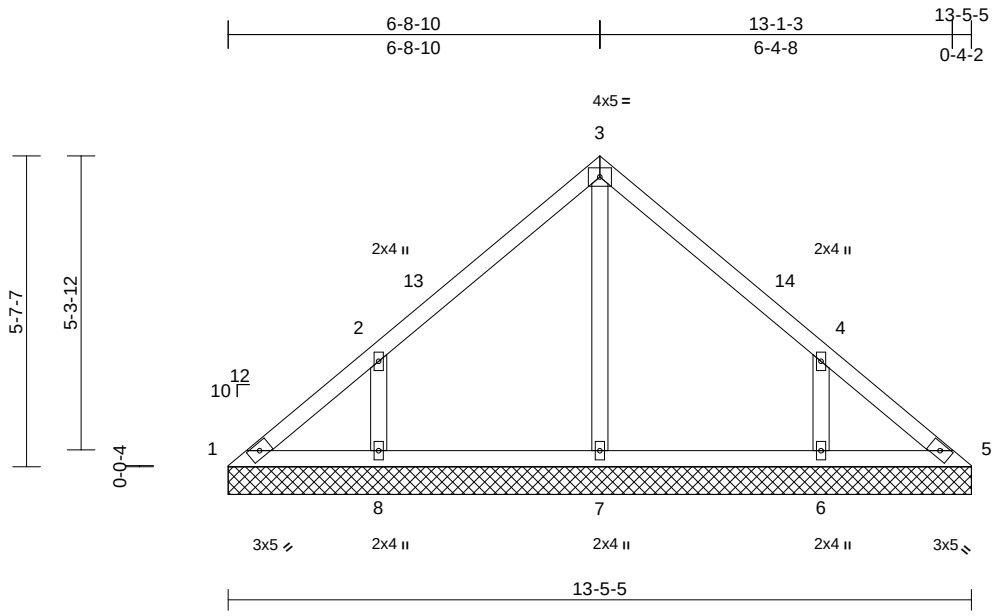

Scale = 1:41.7

Loading	(psf)	Spacing	2-0-0	CSI		DEFL	in	(loc)	l/defl	L/d	PLATES	GRIP
TCLL (roof)	20.0	Plate Grip DOL	1.15	TC	0.33	Vert(LL)	n/a	-	n/a	999	MT20	244/190
Snow (Pf)	20.0	Lumber DOL	1.15	BC	0.12	Vert(TL)	n/a	-	n/a	999		
TCDL	10.0	Rep Stress Incr	YES	WB	0.11	Horiz(TL)	0.00	5	n/a	n/a		
BCLL	0.0*	Code	IRC2018/TPI2014	Matrix-MSH								
BCDL	10.0										Weight: 57 lb	FT = 20%

LUMBER
TOP CHORD 2x4 SP No.2
BOT CHORD 2x4 SP No.2
OTHERS 2x4 SP No.3

BRACING
TOP CHORD Structural wood sheathing directly applied or 6-0-0 oc purlins.
BOT CHORD Rigid ceiling directly applied or 10-0-0 oc bracing.

REACTIONS (size) 1=13-5-5, 5=13-5-5, 6=13-5-5, 7=13-5-5, 8=13-5-5
Max Horiz 1=-128 (LC 12)
Max Uplift 1=-27 (LC 10), 6=-145 (LC 15), 8=-148 (LC 14)
Max Grav 1=112 (LC 25), 5=89 (LC 24), 6=440 (LC 21), 7=282 (LC 20), 8=440 (LC 20)

FORCES (lb) - Maximum Compression/Maximum Tension
TOP CHORD 1-2=-140/115, 2-3=-196/115, 3-4=-196/115, 4-5=-111/76
BOT CHORD 1-8=-46/109, 7-8=-46/87, 6-7=-46/87, 5-6=-46/87
WEBS 3-7=-199/0, 2-8=-376/193, 4-6=-376/193

NOTES
1) Unbalanced roof live loads have been considered for this design.
2) Wind: ASCE 7-16; Vult=130mph (3-second gust) Vasd=103mph; TCDL=6.0psf; BCDL=6.0psf; h=25ft; Cat. II; Exp B; Enclosed; MWFRS (envelope) exterior zone and C-C Exterior(2E) 0-0-5 to 2-8-15, Interior (1) 2-8-15 to 3-8-15, Exterior(2R) 3-8-15 to 9-8-15, Interior (1) 9-8-15 to 10-5-10, Exterior(2E) 10-5-10 to 13-5-10 zone; cantilever left and right exposed ; end vertical left and right exposed;C-C for members and forces & MWFRS for reactions shown; Lumber DOL=1.60 plate grip DOL=1.60
3) Truss designed for wind loads in the plane of the truss only. For studs exposed to wind (normal to the face), see Standard Industry Gable End Details as applicable, or consult qualified building designer as per ANSI/TPI 1.
4) TCLL: ASCE 7-16; Pr=20.0 psf (roof LL: Lum DOL=1.15 Plate DOL=1.15); Pf=20.0 psf (Lum DOL=1.15 Plate DOL=1.15); Is=1.0; Rough Cat B; Fully Exp.; Ce=0.9; Cs=1.00; Ct=1.10
5) Unbalanced snow loads have been considered for this design.
6) Gable requires continuous bottom chord bearing.
7) Gable studs spaced at 4-0-0 oc.
8) This truss has been designed for a 10.0 psf bottom chord live load nonconcurrent with any other live loads.
9) * This truss has been designed for a live load of 20.0psf on the bottom chord in all areas where a rectangle 3-06-00 tall by 2-00-00 wide will fit between the bottom chord and any other members.
10) Provide mechanical connection (by others) of truss to bearing plate capable of withstanding 27 lb uplift at joint 1, 148 lb uplift at joint 8 and 145 lb uplift at joint 6.
11) This truss is designed in accordance with the 2018 International Residential Code sections R502.11.1 and R802.10.2 and referenced standard ANSI/TPI 1.

LOAD CASE(S) Standard

June 16,2025

WARNING - Verify design parameters and READ NOTES ON THIS AND INCLUDED MITEK REFERENCE PAGE MII-7473 rev. 1/2/2023 BEFORE USE.
Design valid for use only with MiTek® connectors. This design is based only upon parameters shown, and is for an individual building component, not a truss system. Before use, the building designer must verify the applicability of design parameters and properly incorporate this design into the overall building design. Bracing indicated is to prevent buckling of individual truss web and/or chord members only. Additional temporary and permanent bracing is always required for stability and to prevent collapse with possible personal injury and property damage. For general guidance regarding the fabrication, storage, delivery, erection and bracing of trusses and truss systems, see **ANSI/TPI1 Quality Criteria and DSB-22** available from Truss Plate Institute (www.tpinst.org) and **BCSI Building Component Safety Information** available from the Structural Building Component Association (www.sbcacomponents.com)

ENGINEERING BY TRENCO A MiTek Affiliate
818 Soundside Road
Edenton, NC 27932

Job	Truss	Truss Type	Qty	Ply	926 Serenity-Roof-329 A CP GLH
25060033-01	VLB3	Valley	1	1	I74200604 Job Reference (optional)

Carter Components (Sanford, NC), Sanford, NC - 27332,

Run: 8.73 S Feb 19 2025 Print: 8.730 S Feb 19 2025 MiTek Industries, Inc. Fri Jun 13 10:53:34 Page: 1
ID:7MIrD_p5BovgCX9psz7pHZyiMPI-RfC?PsB70Hq3NSgPqnL8w3uITXbGKWrCDoi7J4zJC?f

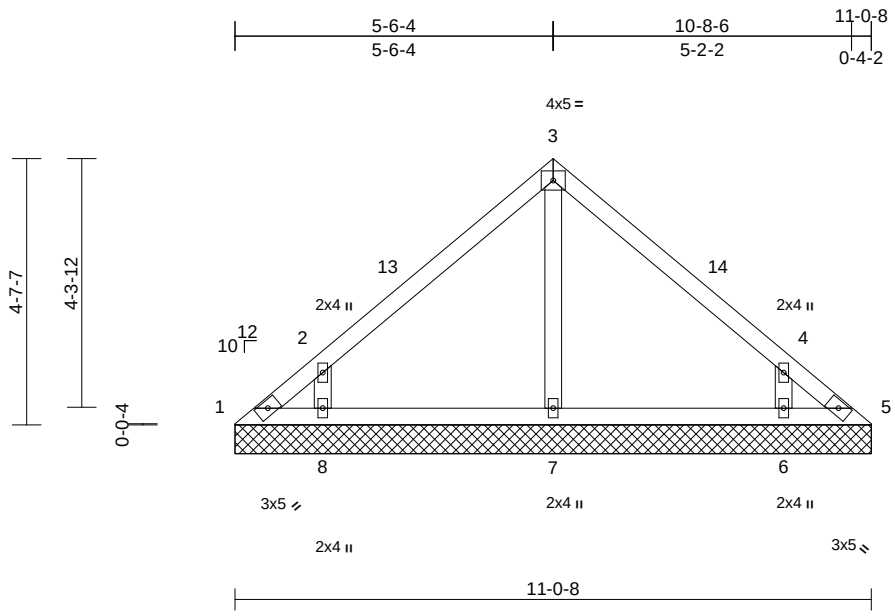

Scale = 1:40

Loading	(psf)	Spacing	2-0-0	CSI		DEFL	in	(loc)	l/defl	L/d	PLATES	GRIP
TCLL (roof)	20.0	Plate Grip DOL	1.15	TC	0.33	Vert(LL)	n/a	-	n/a	999	MT20	244/190
Snow (Pf)	20.0	Lumber DOL	1.15	BC	0.12	Vert(TL)	n/a	-	n/a	999		
TCDL	10.0	Rep Stress Incr	YES	WB	0.09	Horiz(TL)	0.00	5	n/a	n/a		
BCLL	0.0*	Code	IRC2018/TPI2014	Matrix-MSH								
BCDL	10.0										Weight: 45 lb	FT = 20%

LUMBER
TOP CHORD 2x4 SP No.2
BOT CHORD 2x4 SP No.2
OTHERS 2x4 SP No.3

BRACING
TOP CHORD Structural wood sheathing directly applied or 6-0-0 oc purlins.
BOT CHORD Rigid ceiling directly applied or 10-0-0 oc bracing.

REACTIONS (size) 1=11-0-8, 5=11-0-8, 6=11-0-8, 7=11-0-8, 8=11-0-8
Max Horiz 1=-104 (LC 10)
Max Uplift 1=-46 (LC 12), 5=-20 (LC 13), 6=-134 (LC 15), 8=-139 (LC 14)
Max Grav 1=70 (LC 11), 5=49 (LC 27), 6=449 (LC 21), 7=249 (LC 20), 8=449 (LC 20)

FORCES (lb) - Maximum Compression/Maximum Tension
TOP CHORD 1-2=-131/104, 2-3=-226/110, 3-4=-226/110, 4-5=-108/70
BOT CHORD 1-8=-35/74, 7-8=-23/74, 6-7=-23/74, 5-6=-43/74
WEBS 3-7=-161/2, 2-8=-460/260, 4-6=-460/260

NOTES
1) Unbalanced roof live loads have been considered for this design.
2) Wind: ASCE 7-16; Vult=130mph (3-second gust) Vasd=103mph; TCDL=6.0psf; BCDL=6.0psf; h=25ft; Cat. II; Exp B; Enclosed; MWFRS (envelope) exterior zone and C-C Exterior(2E) 0-0-5 to 3-0-5, Exterior(2R) 3-0-5 to 8-0-13, Exterior(2E) 8-0-13 to 11-0-13 zone; cantilever left and right exposed ; end vertical left and right exposed;C-C for members and forces & MWFRS for reactions shown; Lumber DOL=1.60 plate grip DOL=1.60
3) Truss designed for wind loads in the plane of the truss only. For studs exposed to wind (normal to the face), see Standard Industry Gable End Details as applicable, or consult qualified building designer as per ANSI/TPI 1.
4) TCLL: ASCE 7-16; Pr=20.0 psf (roof LL: Lum DOL=1.15 Plate DOL=1.15); Pf=20.0 psf (Lum DOL=1.15 Plate DOL=1.15); Is=1.0; Rough Cat B; Fully Exp.; Ce=0.9; Cs=1.00; Ct=1.10
5) Unbalanced snow loads have been considered for this design.
6) Gable requires continuous bottom chord bearing.
7) Gable studs spaced at 4-0-0 oc.
8) This truss has been designed for a 10.0 psf bottom chord live load nonconcurrent with any other live loads.
9) * This truss has been designed for a live load of 20.0psf on the bottom chord in all areas where a rectangle 3-06-00 tall by 2-00-00 wide will fit between the bottom chord and any other members.
10) Provide mechanical connection (by others) of truss to bearing plate capable of withstanding 46 lb uplift at joint 1, 20 lb uplift at joint 5, 139 lb uplift at joint 8 and 134 lb uplift at joint 6.
11) This truss is designed in accordance with the 2018 International Residential Code sections R502.11.1 and R802.10.2 and referenced standard ANSI/TPI 1.

LOAD CASE(S) Standard

June 16,2025

WARNING - Verify design parameters and READ NOTES ON THIS AND INCLUDED MITEK REFERENCE PAGE MII-7473 rev. 1/2/2023 BEFORE USE.
Design valid for use only with MiTek® connectors. This design is based only upon parameters shown, and is for an individual building component, not a truss system. Before use, the building designer must verify the applicability of design parameters and properly incorporate this design into the overall building design. Bracing indicated is to prevent buckling of individual truss web and/or chord members only. Additional temporary and permanent bracing is always required for stability and to prevent collapse with possible personal injury and property damage. For general guidance regarding the fabrication, storage, delivery, erection and bracing of trusses and truss systems, see **ANSI/TPI1 Quality Criteria and DSB-22** available from Truss Plate Institute (www.tpinst.org) and **BCSI Building Component Safety Information** available from the Structural Building Component Association (www.sbcacomponents.com)

ENGINEERING BY TRENCO A MiTek Affiliate
818 Soundside Road
Edenton, NC 27932

Job	Truss	Truss Type	Qty	Ply	926 Serenity-Roof-329 A CP GLH
25060033-01	VLB4	Valley	1	1	I74200605 Job Reference (optional)

Carter Components (Sanford, NC), Sanford, NC - 27332,

Run: 8.73 S Feb 19 2025 Print: 8.730 S Feb 19 2025 MiTek Industries, Inc. Fri Jun 13 10:53:34 Page: 1
ID:fRGuaS?7PjwP7_NuoKPZxxyiMP2-RfC?PsB70Hq3NSgPqnL8w3uITXbGKWrCDoi7J4zJC?f

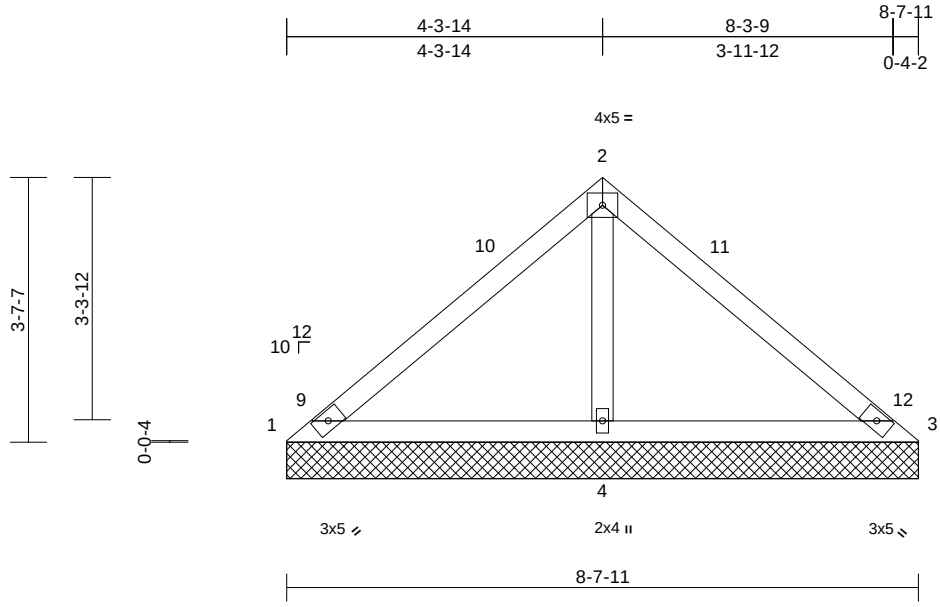

Scale = 1:31.5

Loading	(psf)	Spacing	2-0-0	CSI		DEFL	in	(loc)	l/defl	L/d	PLATES	GRIP
TCLL (roof)	20.0	Plate Grip DOL	1.15	TC	0.41	Vert(LL)	n/a	-	n/a	999	MT20	244/190
Snow (Pf)	20.0	Lumber DOL	1.15	BC	0.38	Vert(TL)	n/a	-	n/a	999		
TCDL	10.0	Rep Stress Incr	YES	WB	0.14	Horiz(TL)	0.00	4	n/a	n/a		
BCLL	0.0*	Code	IRC2018/TPI2014	Matrix-MP								
BCDL	10.0										Weight: 33 lb	FT = 20%

LUMBER
TOP CHORD 2x4 SP No.2
BOT CHORD 2x4 SP No.2
OTHERS 2x4 SP No.3

BRACING
TOP CHORD Structural wood sheathing directly applied or 8-7-11 oc purlins.
BOT CHORD Rigid ceiling directly applied or 6-0-0 oc bracing.

REACTIONS (size) 1=8-7-11, 3=8-7-11, 4=8-7-11
Max Horiz 1=-81 (LC 10)
Max Uplift 1=-49 (LC 21), 3=-49 (LC 20), 4=-106 (LC 14)
Max Grav 1=86 (LC 20), 3=86 (LC 21), 4=699 (LC 21)

FORCES (lb) - Maximum Compression/Maximum Tension
TOP CHORD 1-2=-128/323, 2-3=-128/323
BOT CHORD 1-4=-249/189, 3-4=-249/189
WEBS 2-4=-568/260

NOTES
1) Unbalanced roof live loads have been considered for this design.
2) Wind: ASCE 7-16; Vult=130mph (3-second gust) Vasd=103mph; TCDL=6.0psf; BCDL=6.0psf; h=25ft; Cat. II; Exp B; Enclosed; MWFRS (envelope) exterior zone and C-C Exterior(2E) 0-0-5 to 3-0-5, Exterior(2R) 3-0-5 to 5-8-0, Exterior(2E) 5-8-0 to 8-8-0 zone; cantilever left and right exposed ; end vertical left and right exposed;C-C for members and forces & MWFRS for reactions shown; Lumber DOL=1.60 plate grip DOL=1.60
3) Truss designed for wind loads in the plane of the truss only. For studs exposed to wind (normal to the face), see Standard Industry Gable End Details as applicable, or consult qualified building designer as per ANSI/TPI 1.
4) TCLL: ASCE 7-16; Pr=20.0 psf (roof LL: Lum DOL=1.15 Plate DOL=1.15); Pf=20.0 psf (Lum DOL=1.15 Plate DOL=1.15); Is=1.0; Rough Cat B; Fully Exp.; Ce=0.9; Cs=1.00; Ct=1.10
5) Unbalanced snow loads have been considered for this design.
6) Gable requires continuous bottom chord bearing.
7) Gable studs spaced at 4-0-0 oc.
8) This truss has been designed for a 10.0 psf bottom chord live load nonconcurrent with any other live loads.
9) * This truss has been designed for a live load of 20.0psf on the bottom chord in all areas where a rectangle 3-06-00 tall by 2-00-00 wide will fit between the bottom chord and any other members.
10) Provide mechanical connection (by others) of truss to bearing plate capable of withstanding 49 lb uplift at joint 1, 49 lb uplift at joint 3 and 106 lb uplift at joint 4.
11) This truss is designed in accordance with the 2018 International Residential Code sections R502.11.1 and R802.10.2 and referenced standard ANSI/TPI 1.

LOAD CASE(S) Standard

June 16,2025

WARNING - Verify design parameters and READ NOTES ON THIS AND INCLUDED MITEK REFERENCE PAGE MII-7473 rev. 1/2/2023 BEFORE USE.
Design valid for use only with MiTek® connectors. This design is based only upon parameters shown, and is for an individual building component, not a truss system. Before use, the building designer must verify the applicability of design parameters and properly incorporate this design into the overall building design. Bracing indicated is to prevent buckling of individual truss web and/or chord members only. Additional temporary and permanent bracing is always required for stability and to prevent collapse with possible personal injury and property damage. For general guidance regarding the fabrication, storage, delivery, erection and bracing of trusses and truss systems, see **ANSI/TPI1 Quality Criteria and DSB-22** available from Truss Plate Institute (www.tpinst.org) and **BCSI Building Component Safety Information** available from the Structural Building Component Association (www.sbcacomponents.com)

ENGINEERING BY TRENCO A MiTek Affiliate
818 Soundside Road
Edenton, NC 27932

Job	Truss	Truss Type	Qty	Ply	926 Serenity-Roof-329 A CP GLH
25060033-01	VLB5	Valley	1	1	I74200606 Job Reference (optional)

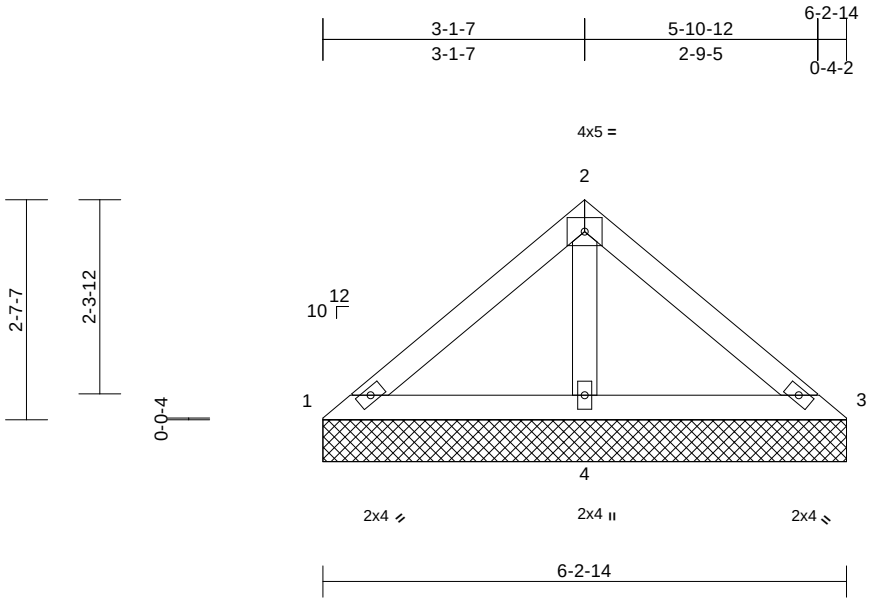

Scale = 1:27.5

Loading	(psf)	Spacing	2-0-0	CSI		DEFL	in	(loc)	l/defl	L/d	PLATES	GRIP
TCLL (roof)	20.0	Plate Grip DOL	1.15	TC	0.17	Vert(LL)	n/a	-	n/a	999	MT20	244/190
Snow (Pf)	20.0	Lumber DOL	1.15	BC	0.19	Vert(TL)	n/a	-	n/a	999		
TCDL	10.0	Rep Stress Incr	YES	WB	0.06	Horiz(TL)	0.00	4	n/a	n/a		
BCLL	0.0*	Code	IRC2018/TPI2014	Matrix-MP								
BCDL	10.0										Weight: 23 lb	FT = 20%

LUMBER
TOP CHORD 2x4 SP No.2
BOT CHORD 2x4 SP No.2
OTHERS 2x4 SP No.3

BRACING
TOP CHORD Structural wood sheathing directly applied or 6-2-14 oc purlins.
BOT CHORD Rigid ceiling directly applied or 6-0-0 oc bracing.

REACTIONS (size) 1=6-2-14, 3=6-2-14, 4=6-2-14
Max Horiz 1=57 (LC 13)
Max Uplift 3=-3 (LC 10), 4=-54 (LC 14)
Max Grav 1=101 (LC 20), 3=101 (LC 21), 4=425 (LC 21)

FORCES (lb) - Maximum Compression/Maximum Tension
TOP CHORD 1-2=-88/171, 2-3=-88/171
BOT CHORD 1-4=-136/127, 3-4=-136/127
WEBS 2-4=-328/156

NOTES
1) Unbalanced roof live loads have been considered for this design.
2) Wind: ASCE 7-16; Vult=130mph (3-second gust) Vasd=103mph; TCDL=6.0psf; BCDL=6.0psf; h=25ft; Cat. II; Exp B; Enclosed; MWFRS (envelope) exterior zone and C-C Exterior(2E) zone; cantilever left and right exposed ; end vertical left and right exposed;C-C for members and forces & MWFRS for reactions shown; Lumber DOL=1.60 plate grip DOL=1.60
3) Truss designed for wind loads in the plane of the truss only. For studs exposed to wind (normal to the face), see Standard Industry Gable End Details as applicable, or consult qualified building designer as per ANSI/TPI 1.
4) TCLL: ASCE 7-16; Pr=20.0 psf (roof LL: Lum DOL=1.15 Plate DOL=1.15); Pf=20.0 psf (Lum DOL=1.15 Plate DOL=1.15); Is=1.0; Rough Cat B; Fully Exp.; Ce=0.9; Cs=1.00; Ct=1.10
5) Unbalanced snow loads have been considered for this design.
6) Gable requires continuous bottom chord bearing.
7) Gable studs spaced at 4-0-0 oc.
8) This truss has been designed for a 10.0 psf bottom chord live load nonconcurrent with any other live loads.
9) * This truss has been designed for a live load of 20.0psf on the bottom chord in all areas where a rectangle 3-06-00 tall by 2-00-00 wide will fit between the bottom chord and any other members.
10) Provide mechanical connection (by others) of truss to bearing plate capable of withstanding 3 lb uplift at joint 3 and 54 lb uplift at joint 4.
11) This truss is designed in accordance with the 2018 International Residential Code sections R502.11.1 and R802.10.2 and referenced standard ANSI/TPI 1.

LOAD CASE(S) Standard

June 16,2025

WARNING - Verify design parameters and READ NOTES ON THIS AND INCLUDED MITEK REFERENCE PAGE MII-7473 rev. 1/2/2023 BEFORE USE.
Design valid for use only with MiTek® connectors. This design is based only upon parameters shown, and is for an individual building component, not a truss system. Before use, the building designer must verify the applicability of design parameters and properly incorporate this design into the overall building design. Bracing indicated is to prevent buckling of individual truss web and/or chord members only. Additional temporary and permanent bracing is always required for stability and to prevent collapse with possible personal injury and property damage. For general guidance regarding the fabrication, storage, delivery, erection and bracing of trusses and truss systems, see **ANSI/TPI1 Quality Criteria and DSB-22** available from Truss Plate Institute (www.tpinst.org) and **BCSI Building Component Safety Information** available from the Structural Building Component Association (www.sbcacomponents.com)

ENGINEERING BY TRENCO A MiTek Affiliate
818 Soundside Road
Edenton, NC 27932

Job	Truss	Truss Type	Qty	Ply	926 Serenity-Roof-329 A CP GLH
25060033-01	VLB6	Valley	1	1	I74200607 Job Reference (optional)

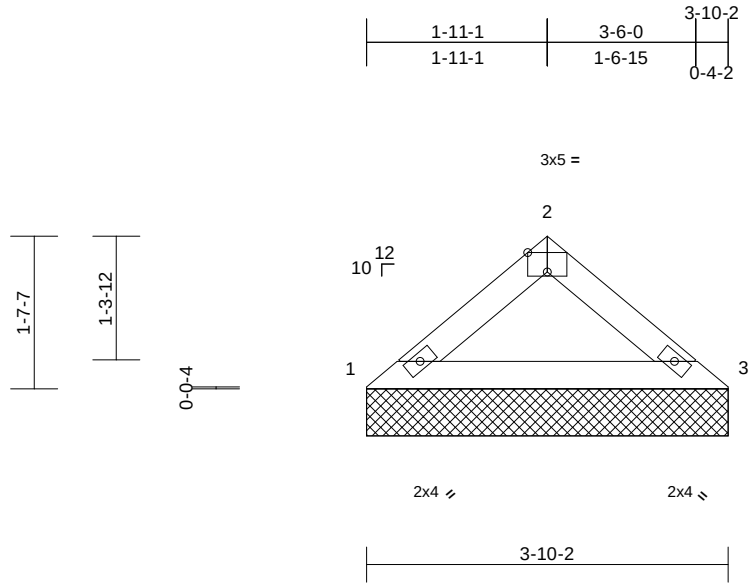

Scale = 1:24.5

Plate Offsets (X, Y): [2:0-2-8,Edge]

Loading	(psf)	Spacing	2-0-0	CSI		DEFL	in	(loc)	l/defl	L/d	PLATES	GRIP
TCLL (roof)	20.0	Plate Grip DOL	1.15	TC	0.11	Vert(LL)	n/a	-	n/a	999	MT20	244/190
Snow (Pf)	20.0	Lumber DOL	1.15	BC	0.09	Vert(TL)	n/a	-	n/a	999		
TCDL	10.0	Rep Stress Incr	YES	WB	0.00	Horiz(TL)	0.00	3	n/a	n/a		
BCLL	0.0*	Code	IRC2018/TPI2014	Matrix-MP								
BCDL	10.0										Weight: 12 lb	FT = 20%

LUMBER
TOP CHORD 2x4 SP No.2
BOT CHORD 2x4 SP No.2

BRACING
TOP CHORD Structural wood sheathing directly applied or 3-10-2 oc purlins.
BOT CHORD Rigid ceiling directly applied or 10-0-0 oc bracing.

REACTIONS (size) 1=3-10-2, 3=3-10-2
Max Horiz 1=-34 (LC 12)
Max Uplift 1=-13 (LC 14), 3=-13 (LC 15)
Max Grav 1=181 (LC 20), 3=181 (LC 21)

FORCES (lb) - Maximum Compression/Maximum Tension
TOP CHORD 1-2=-236/87, 2-3=-236/87
BOT CHORD 1-3=-53/172

NOTES
1) Unbalanced roof live loads have been considered for this design.
2) Wind: ASCE 7-16; Vult=130mph (3-second gust) Vasd=103mph; TCDL=6.0psf; BCDL=6.0psf; h=25ft; Cat. II; Exp B; Enclosed; MWFRS (envelope) exterior zone and C-C Exterior(2E) zone; cantilever left and right exposed ; end vertical left and right exposed;C-C for members and forces & MWFRS for reactions shown; Lumber DOL=1.60 plate grip DOL=1.60
3) Truss designed for wind loads in the plane of the truss only. For studs exposed to wind (normal to the face), see Standard Industry Gable End Details as applicable, or consult qualified building designer as per ANSI/TPI 1.
4) TCLL: ASCE 7-16; Pr=20.0 psf (roof LL: Lum DOL=1.15 Plate DOL=1.15); Pf=20.0 psf (Lum DOL=1.15 Plate DOL=1.15); Is=1.0; Rough Cat B; Fully Exp.; Ce=0.9; Cs=1.00; Ct=1.10
5) Unbalanced snow loads have been considered for this design.
6) Gable requires continuous bottom chord bearing.
7) Gable studs spaced at 4-0-0 oc.
8) This truss has been designed for a 10.0 psf bottom chord live load nonconcurrent with any other live loads.
9) * This truss has been designed for a live load of 20.0psf on the bottom chord in all areas where a rectangle 3-06-00 tall by 2-00-00 wide will fit between the bottom chord and any other members.
10) Provide mechanical connection (by others) of truss to bearing plate capable of withstanding 13 lb uplift at joint 1 and 13 lb uplift at joint 3.
11) This truss is designed in accordance with the 2018 International Residential Code sections R502.11.1 and R802.10.2 and referenced standard ANSI/TPI 1.

LOAD CASE(S) Standard

June 16,2025

WARNING - Verify design parameters and READ NOTES ON THIS AND INCLUDED MITEK REFERENCE PAGE MII-7473 rev. 1/2/2023 BEFORE USE.
Design valid for use only with MiTek® connectors. This design is based only upon parameters shown, and is for an individual building component, not a truss system. Before use, the building designer must verify the applicability of design parameters and properly incorporate this design into the overall building design. Bracing indicated is to prevent buckling of individual truss web and/or chord members only. Additional temporary and permanent bracing is always required for stability and to prevent collapse with possible personal injury and property damage. For general guidance regarding the fabrication, storage, delivery, erection and bracing of trusses and truss systems, see **ANSI/TPI1 Quality Criteria and DSB-22** available from Truss Plate Institute (www.tpinst.org) and **BCSI Building Component Safety Information** available from the Structural Building Component Association (www.sbcacomponents.com)

ENGINEERING BY TRENCO A MiTek Affiliate
818 Soundside Road
Edenton, NC 27932

Job	Truss	Truss Type	Qty	Ply	926 Serenity-Roof-329 A CP GLH
25060033-01	VLC1	Valley	1	1	I74200608 Job Reference (optional)

Carter Components (Sanford, NC), Sanford, NC - 27332,

Run: 8.73 S Feb 19 2025 Print: 8.730 S Feb 19 2025 MiTek Industries, Inc. Fri Jun 13 10:53:34 Page: 1
ID:tY8k3ftoJ8CbTim0rIFlfKyiMQV-RfC?PsB70Hq3NSgPqnL8w3uITXbGKWrCDoi7J4zJC?f

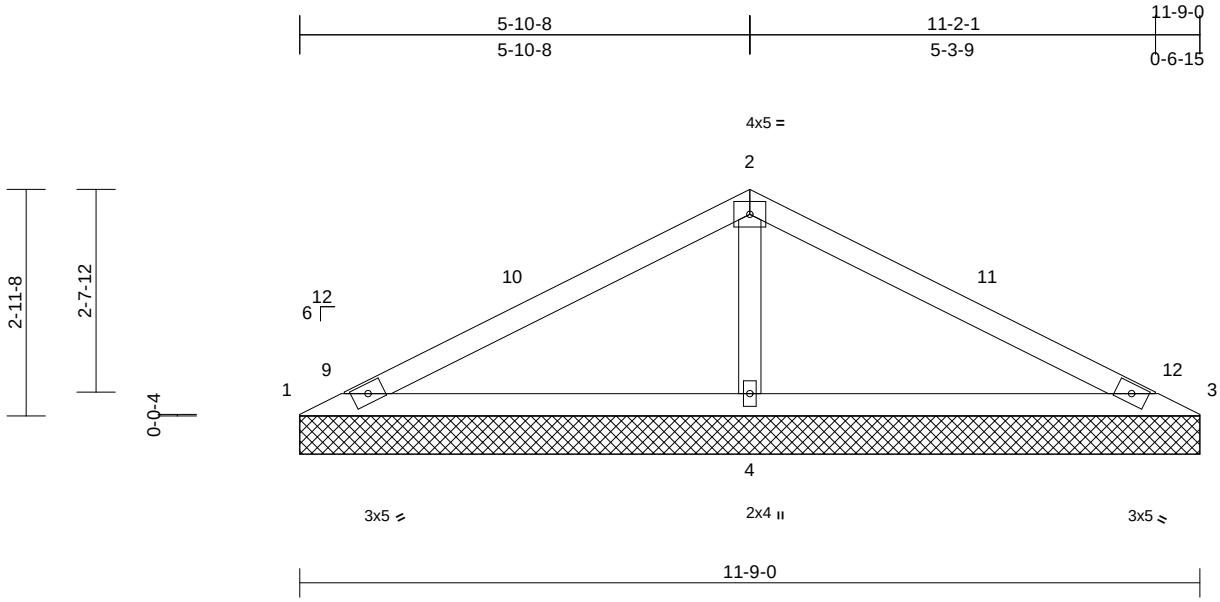

Scale = 1:30.1

Loading	(psf)	Spacing	2-0-0	CSI		DEFL	in	(loc)	l/defl	L/d	PLATES	GRIP
TCLL (roof)	20.0	Plate Grip DOL	1.15	TC	0.61	Vert(LL)	n/a	-	n/a	999	MT20	244/190
Snow (Pf)	20.0	Lumber DOL	1.15	BC	0.56	Vert(TL)	n/a	-	n/a	999		
TCDL	10.0	Rep Stress Incr	YES	WB	0.17	Horiz(TL)	0.01	4	n/a	n/a		
BCLL	0.0*	Code	IRC2018/TPI2014	Matrix-MSH								
BCDL	10.0										Weight: 39 lb	FT = 20%

LUMBER
TOP CHORD 2x4 SP No.2
BOT CHORD 2x4 SP No.2
OTHERS 2x4 SP No.3

BRACING
TOP CHORD Structural wood sheathing directly applied or 10-0-0 oc purlins.
BOT CHORD Rigid ceiling directly applied or 6-0-0 oc bracing.

REACTIONS (size) 1=11-9-0, 3=11-9-0, 4=11-9-0
Max Horiz 1=-44 (LC 15)
Max Uplift 1=-62 (LC 21), 3=-62 (LC 20), 4=-80 (LC 14)
Max Grav 1=106 (LC 20), 3=106 (LC 21), 4=921 (LC 21)

FORCES (lb) - Maximum Compression/Maximum Tension
TOP CHORD 1-2=-182/540, 2-3=-182/540
BOT CHORD 1-4=-414/234, 3-4=-414/234
WEBS 2-4=-724/363

NOTES
1) Unbalanced roof live loads have been considered for this design.
2) Wind: ASCE 7-16; Vult=130mph (3-second gust) Vasd=103mph; TCDL=6.0psf; BCDL=6.0psf; h=25ft; Cat. II; Exp B; Enclosed; MWFRS (envelope) exterior zone and C-C Exterior(2E) 0-0-8 to 3-0-8, Exterior(2R) 3-0-8 to 8-9-8, Exterior(2E) 8-9-8 to 11-9-8 zone; cantilever left and right exposed ; end vertical left and right exposed;C-C for members and forces & MWFRS for reactions shown; Lumber DOL=1.60 plate grip DOL=1.60
3) Truss designed for wind loads in the plane of the truss only. For studs exposed to wind (normal to the face), see Standard Industry Gable End Details as applicable, or consult qualified building designer as per ANSI/TPI 1.
4) TCLL: ASCE 7-16; Pr=20.0 psf (roof LL: Lum DOL=1.15 Plate DOL=1.15); Pf=20.0 psf (Lum DOL=1.15 Plate DOL=1.15); Is=1.0; Rough Cat B; Fully Exp.; Ce=0.9; Cs=1.00; Ct=1.10
5) Unbalanced snow loads have been considered for this design.
6) Gable requires continuous bottom chord bearing.
7) Gable studs spaced at 4-0-0 oc.
8) This truss has been designed for a 10.0 psf bottom chord live load nonconcurrent with any other live loads.
9) * This truss has been designed for a live load of 20.0psf on the bottom chord in all areas where a rectangle 3-06-00 tall by 2-00-00 wide will fit between the bottom chord and any other members.
10) Provide mechanical connection (by others) of truss to bearing plate capable of withstanding 62 lb uplift at joint 1, 62 lb uplift at joint 3 and 80 lb uplift at joint 4.
11) This truss is designed in accordance with the 2018 International Residential Code sections R502.11.1 and R802.10.2 and referenced standard ANSI/TPI 1.

LOAD CASE(S) Standard

June 16,2025

WARNING - Verify design parameters and READ NOTES ON THIS AND INCLUDED MITEK REFERENCE PAGE MII-7473 rev. 1/2/2023 BEFORE USE.
Design valid for use only with MiTek® connectors. This design is based only upon parameters shown, and is for an individual building component, not a truss system. Before use, the building designer must verify the applicability of design parameters and properly incorporate this design into the overall building design. Bracing indicated is to prevent buckling of individual truss web and/or chord members only. Additional temporary and permanent bracing is always required for stability and to prevent collapse with possible personal injury and property damage. For general guidance regarding the fabrication, storage, delivery, erection and bracing of trusses and truss systems, see **ANSI/TPI1 Quality Criteria and DSB-22** available from Truss Plate Institute (www.tpinst.org) and **BCSI Building Component Safety Information** available from the Structural Building Component Association (www.sbcacomponents.com)

ENGINEERING BY TRENCO A MiTek Affiliate
818 Soundside Road
Edenton, NC 27932

Job	Truss	Truss Type	Qty	Ply	926 Serenity-Roof-329 A CP GLH
25060033-01	VLC2	Valley	1	1	I74200609 Job Reference (optional)

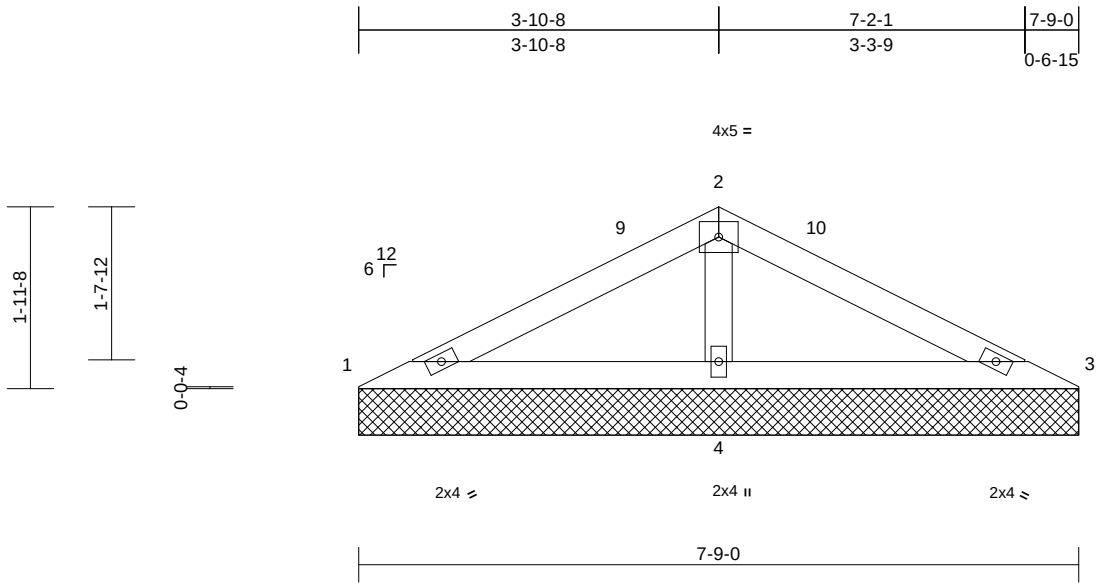

Scale = 1:24.8

Loading	(psf)	Spacing	2-0-0	CSI		DEFL	in	(loc)	l/defl	L/d	PLATES	GRIP
TCLL (roof)	20.0	Plate Grip DOL	1.15	TC	0.25	Vert(LL)	n/a	-	n/a	999	MT20	244/190
Snow (Pf)	20.0	Lumber DOL	1.15	BC	0.27	Vert(TL)	n/a	-	n/a	999		
TCDL	10.0	Rep Stress Incr	YES	WB	0.07	Horiz(TL)	0.00	4	n/a	n/a		
BCLL	0.0*	Code	IRC2018/TPI2014	Matrix-MP								
BCDL	10.0										Weight: 24 lb	FT = 20%

LUMBER
TOP CHORD 2x4 SP No.2
BOT CHORD 2x4 SP No.2
OTHERS 2x4 SP No.3

BRACING
TOP CHORD Structural wood sheathing directly applied or 7-9-0 oc purlins.
BOT CHORD Rigid ceiling directly applied or 6-0-0 oc bracing.

REACTIONS (size) 1=7-9-0, 3=7-9-0, 4=7-9-0
Max Horiz 1=28 (LC 14)
Max Uplift 1=-9 (LC 14), 3=-16 (LC 15), 4=-42 (LC 14)
Max Grav 1=113 (LC 20), 3=113 (LC 21), 4=523 (LC 20)

FORCES (lb) - Maximum Compression/Maximum Tension
TOP CHORD 1-2=-127/266, 2-3=-127/266
BOT CHORD 1-4=-228/152, 3-4=-228/152
WEBS 2-4=-385/210

NOTES
1) Unbalanced roof live loads have been considered for this design.
2) Wind: ASCE 7-16; Vult=130mph (3-second gust) Vasd=103mph; TCDL=6.0psf; BCDL=6.0psf; h=25ft; Cat. II; Exp B; Enclosed; MWFRS (envelope) exterior zone and C-C Exterior(2E) 0-0-8 to 3-0-8, Exterior(2R) 3-0-8 to 4-9-8, Exterior(2E) 4-9-8 to 7-9-8 zone; cantilever left and right exposed ; end vertical left and right exposed;C-C for members and forces & MWFRS for reactions shown; Lumber DOL=1.60 plate grip DOL=1.60
3) Truss designed for wind loads in the plane of the truss only. For studs exposed to wind (normal to the face), see Standard Industry Gable End Details as applicable, or consult qualified building designer as per ANSI/TPI 1.
4) TCLL: ASCE 7-16; Pr=20.0 psf (roof LL: Lum DOL=1.15 Plate DOL=1.15); Pf=20.0 psf (Lum DOL=1.15 Plate DOL=1.15); Is=1.0; Rough Cat B; Fully Exp.; Ce=0.9; Cs=1.00; Ct=1.10
5) Unbalanced snow loads have been considered for this design.
6) Gable requires continuous bottom chord bearing.
7) Gable studs spaced at 4-0-0 oc.
8) This truss has been designed for a 10.0 psf bottom chord live load nonconcurrent with any other live loads.
9) * This truss has been designed for a live load of 20.0psf on the bottom chord in all areas where a rectangle 3-06-00 tall by 2-00-00 wide will fit between the bottom chord and any other members.
10) Provide mechanical connection (by others) of truss to bearing plate capable of withstanding 9 lb uplift at joint 1, 16 lb uplift at joint 3 and 42 lb uplift at joint 4.
11) This truss is designed in accordance with the 2018 International Residential Code sections R502.11.1 and R802.10.2 and referenced standard ANSI/TPI 1.

LOAD CASE(S) Standard

June 16,2025

WARNING - Verify design parameters and READ NOTES ON THIS AND INCLUDED MITEK REFERENCE PAGE MII-7473 rev. 1/2/2023 BEFORE USE.
Design valid for use only with MiTek® connectors. This design is based only upon parameters shown, and is for an individual building component, not a truss system. Before use, the building designer must verify the applicability of design parameters and properly incorporate this design into the overall building design. Bracing indicated is to prevent buckling of individual truss web and/or chord members only. Additional temporary and permanent bracing is always required for stability and to prevent collapse with possible personal injury and property damage. For general guidance regarding the fabrication, storage, delivery, erection and bracing of trusses and truss systems, see **ANSI/TPI1 Quality Criteria and DSB-22** available from Truss Plate Institute (www.tpinst.org) and **BCSI Building Component Safety Information** available from the Structural Building Component Association (www.sbcacomponents.com)

ENGINEERING BY TRENCO A MiTek Affiliate
818 Soundside Road
Edenton, NC 27932

Job	Truss	Truss Type	Qty	Ply	926 Serenity-Roof-329 A CP GLH
25060033-01	VLC3	Valley	1	1	I74200610 Job Reference (optional)

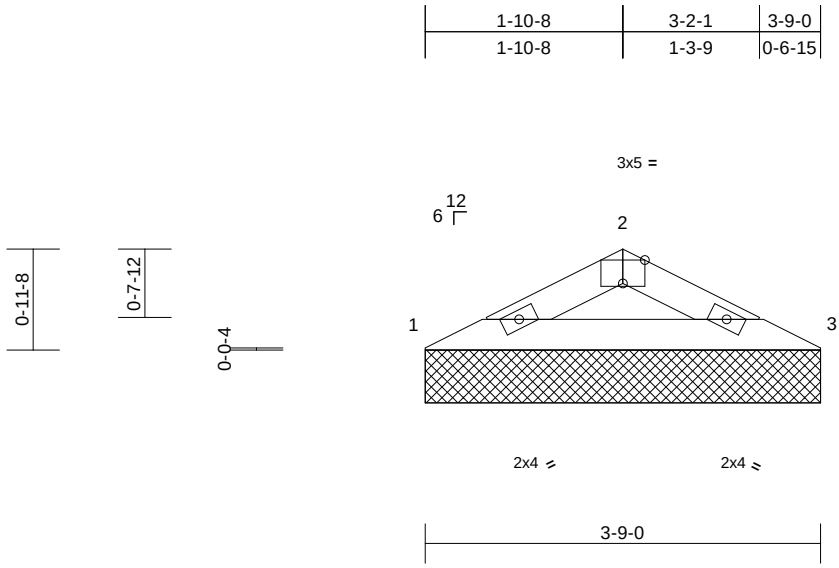

Scale = 1:21.9

Plate Offsets (X, Y): [2:0-2-8,Edge]

Loading	(psf)	Spacing	2-0-0	CSI		DEFL	in	(loc)	l/defl	L/d	PLATES	GRIP
TCLL (roof)	20.0	Plate Grip DOL	1.15	TC	0.11	Vert(LL)	n/a	-	n/a	999	MT20	244/190
Snow (Pf)	20.0	Lumber DOL	1.15	BC	0.12	Vert(TL)	n/a	-	n/a	999		
TCDL	10.0	Rep Stress Incr	YES	WB	0.00	Horiz(TL)	0.00	3	n/a	n/a		
BCLL	0.0*	Code	IRC2018/TPI2014	Matrix-MP								
BCDL	10.0										Weight: 10 lb	FT = 20%

LUMBER
TOP CHORD 2x4 SP No.2
BOT CHORD 2x4 SP No.2

BRACING
TOP CHORD Structural wood sheathing directly applied or 3-9-0 oc purlins.
BOT CHORD Rigid ceiling directly applied or 10-0-0 oc bracing.

REACTIONS (size) 1=3-9-0, 3=3-9-0
Max Horiz 1=13 (LC 14)
Max Uplift 1=-15 (LC 14), 3=-15 (LC 15)
Max Grav 1=168 (LC 20), 3=168 (LC 21)

FORCES (lb) - Maximum Compression/Maximum Tension
TOP CHORD 1-2=-284/126, 2-3=-284/126
BOT CHORD 1-3=-99/245

NOTES
1) Unbalanced roof live loads have been considered for this design.
2) Wind: ASCE 7-16; Vult=130mph (3-second gust) Vasd=103mph; TCDL=6.0psf; BCDL=6.0psf; h=25ft; Cat. II; Exp B; Enclosed; MWFRS (envelope) exterior zone and C-C Exterior(2E) zone; cantilever left and right exposed ; end vertical left and right exposed;C-C for members and forces & MWFRS for reactions shown; Lumber DOL=1.60 plate grip DOL=1.60
3) Truss designed for wind loads in the plane of the truss only. For studs exposed to wind (normal to the face), see Standard Industry Gable End Details as applicable, or consult qualified building designer as per ANSI/TPI 1.
4) TCLL: ASCE 7-16; Pr=20.0 psf (roof LL: Lum DOL=1.15 Plate DOL=1.15); Pf=20.0 psf (Lum DOL=1.15 Plate DOL=1.15); Is=1.0; Rough Cat B; Fully Exp.; Ce=0.9; Cs=1.00; Ct=1.10
5) Unbalanced snow loads have been considered for this design.
6) Gable requires continuous bottom chord bearing.
7) Gable studs spaced at 4-0-0 oc.
8) This truss has been designed for a 10.0 psf bottom chord live load nonconcurrent with any other live loads.
9) * This truss has been designed for a live load of 20.0psf on the bottom chord in all areas where a rectangle 3-06-00 tall by 2-00-00 wide will fit between the bottom chord and any other members.
10) Provide mechanical connection (by others) of truss to bearing plate capable of withstanding 15 lb uplift at joint 1 and 15 lb uplift at joint 3.
11) This truss is designed in accordance with the 2018 International Residential Code sections R502.11.1 and R802.10.2 and referenced standard ANSI/TPI 1.

LOAD CASE(S) Standard

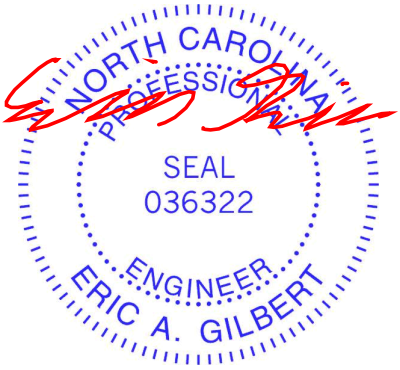

June 16,2025

WARNING - Verify design parameters and READ NOTES ON THIS AND INCLUDED MITEK REFERENCE PAGE MII-7473 rev. 1/2/2023 BEFORE USE.
Design valid for use only with MiTek® connectors. This design is based only upon parameters shown, and is for an individual building component, not a truss system. Before use, the building designer must verify the applicability of design parameters and properly incorporate this design into the overall building design. Bracing indicated is to prevent buckling of individual truss web and/or chord members only. Additional temporary and permanent bracing is always required for stability and to prevent collapse with possible personal injury and property damage. For general guidance regarding the fabrication, storage, delivery, erection and bracing of trusses and truss systems, see **ANSI/TPI1 Quality Criteria and DSB-22** available from Truss Plate Institute (www.tpinst.org) and **BCSI Building Component Safety Information** available from the Structural Building Component Association (www.sbcacomponents.com)

ENGINEERING BY TRENCO A MiTek Affiliate
818 Soundside Road
Edenton, NC 27932

Job	Truss	Truss Type	Qty	Ply	926 Serenity-Roof-329 A CP GLH
25060033-01	VLD1	Valley	1	1	I74200611 Job Reference (optional)

Carter Components (Sanford, NC), Sanford, NC - 27332, Run: 8.73 S Feb 19 2025 Print: 8.730 S Feb 19 2025 MiTek Industries, Inc. Fri Jun 13 10:53:34 Page: 1
ID:vAVBsNisdZRLs81UW9iY4Kyi377-RfC?PsB70Hq3NSgPqnL8w3uITXbGKWrCDoi7J4zJC?f

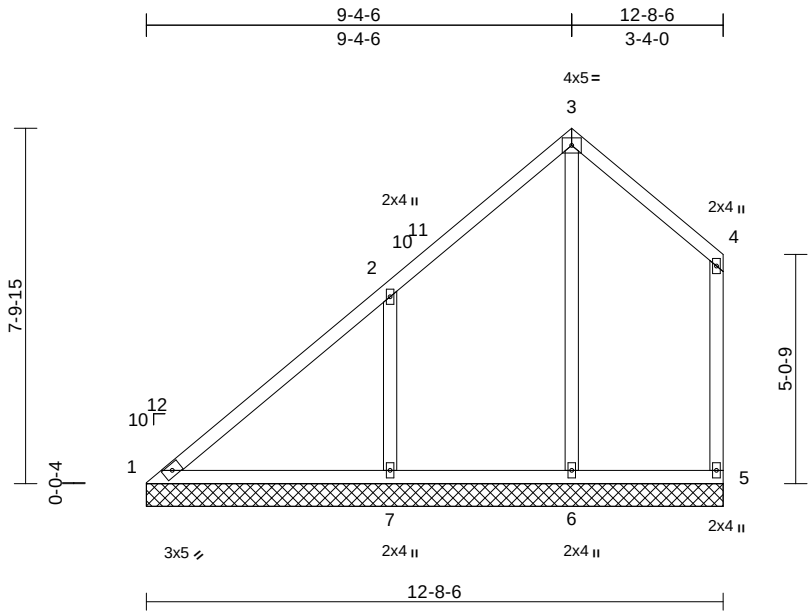

Scale = 1:50.7

Loading	(psf)	Spacing	2-0-0	CSI		DEFL	in	(loc)	l/defl	L/d	PLATES	GRIP
TCLL (roof)	20.0	Plate Grip DOL	1.15	TC	0.38	Vert(LL)	n/a	-	n/a	999	MT20	244/190
Snow (Pf)	20.0	Lumber DOL	1.15	BC	0.29	Vert(TL)	n/a	-	n/a	999		
TCDL	10.0	Rep Stress Incr	YES	WB	0.27	Horiz(TL)	0.01	5	n/a	n/a		
BCLL	0.0*	Code	IRC2018/TPI2014	Matrix-MSH								
BCDL	10.0										Weight: 67 lb	FT = 20%

LUMBER
TOP CHORD 2x4 SP No.2
BOT CHORD 2x4 SP No.2
WEBS 2x4 SP No.3
OTHERS 2x4 SP No.3

BRACING
TOP CHORD Structural wood sheathing directly applied or 6-0-0 oc purlins, except end verticals.
BOT CHORD Rigid ceiling directly applied or 10-0-0 oc bracing.

REACTIONS (size) 1=12-8-6, 5=12-8-6, 6=12-8-6, 7=12-8-6
Max Horiz 1=239 (LC 11)
Max Uplift 1=-38 (LC 10), 5=-58 (LC 10), 6=-37 (LC 11), 7=-213 (LC 14)
Max Grav 1=255 (LC 25), 5=210 (LC 25), 6=390 (LC 24), 7=610 (LC 24)

FORCES (lb) - Maximum Compression/Maximum Tension
TOP CHORD 1-2=-334/214, 2-3=-192/181, 3-4=-136/196, 4-5=-173/158
BOT CHORD 1-7=-68/279, 6-7=-60/90, 5-6=-60/90
WEBS 3-6=-256/99, 2-7=-419/258

NOTES
1) Unbalanced roof live loads have been considered for this design.
2) Wind: ASCE 7-16; Vult=130mph (3-second gust) Vasd=103mph; TCDL=6.0psf; BCDL=6.0psf; h=25ft; Cat. II; Exp B; Enclosed; MWFRS (envelope) exterior zone and C-C Exterior(2E) 0-0-5 to 3-0-5, Interior (1) 3-0-5 to 6-4-11, Exterior(2R) 6-4-11 to 9-4-11, Exterior(2E) 9-4-11 to 12-6-15 zone; cantilever left and right exposed ; end vertical left and right exposed;C-C for members and forces & MWFRS for reactions shown; Lumber DOL=1.60 plate grip DOL=1.60
3) Truss designed for wind loads in the plane of the truss only. For studs exposed to wind (normal to the face), see Standard Industry Gable End Details as applicable, or consult qualified building designer as per ANSI/TPI 1.
4) TCLL: ASCE 7-16; Pr=20.0 psf (roof LL: Lum DOL=1.15 Plate DOL=1.15); Pf=20.0 psf (Lum DOL=1.15 Plate DOL=1.15); Is=1.0; Rough Cat B; Fully Exp.; Ce=0.9; Cs=1.00; Ct=1.10
5) Unbalanced snow loads have been considered for this design.
6) Gable requires continuous bottom chord bearing.
7) Gable studs spaced at 4-0-0 oc.
8) This truss has been designed for a 10.0 psf bottom chord live load nonconcurrent with any other live loads.
9) * This truss has been designed for a live load of 20.0psf on the bottom chord in all areas where a rectangle 3-06-00 tall by 2-00-00 wide will fit between the bottom chord and any other members, with BCDL = 10.0psf.
10) Provide mechanical connection (by others) of truss to bearing plate capable of withstanding 58 lb uplift at joint 5, 38 lb uplift at joint 1, 37 lb uplift at joint 6 and 213 lb uplift at joint 7.
11) This truss is designed in accordance with the 2018 International Residential Code sections R502.11.1 and R802.10.2 and referenced standard ANSI/TPI 1.

LOAD CASE(S) Standard

June 16,2025

WARNING - Verify design parameters and READ NOTES ON THIS AND INCLUDED MITEK REFERENCE PAGE MII-7473 rev. 1/2/2023 BEFORE USE.
Design valid for use only with MiTek® connectors. This design is based only upon parameters shown, and is for an individual building component, not a truss system. Before use, the building designer must verify the applicability of design parameters and properly incorporate this design into the overall building design. Bracing indicated is to prevent buckling of individual truss web and/or chord members only. Additional temporary and permanent bracing is always required for stability and to prevent collapse with possible personal injury and property damage. For general guidance regarding the fabrication, storage, delivery, erection and bracing of trusses and truss systems, see **ANSI/TPI1 Quality Criteria and DSB-22** available from Truss Plate Institute (www.tpinst.org) and **BCSI Building Component Safety Information** available from the Structural Building Component Association (www.sbcacomponents.com)

ENGINEERING BY TRENCO A MiTek Affiliate
818 Soundside Road
Edenton, NC 27932

Job	Truss	Truss Type	Qty	Ply	926 Serenity-Roof-329 A CP GLH
25060033-01	VLD2	Valley	1	1	I74200612 Job Reference (optional)

Carter Components (Sanford, NC), Sanford, NC - 27332, Run: 8.73 S Feb 19 2025 Print: 8.730 S Feb 19 2025 MiTek Industries, Inc. Fri Jun 13 10:53:35 Page: 1

ID:vAVBsNisdZRLs81UW9iY4Kyi377-RfC?PsB70Hq3NSgPqnL8w3uITXbGKWrCDoi7J4zJC?f

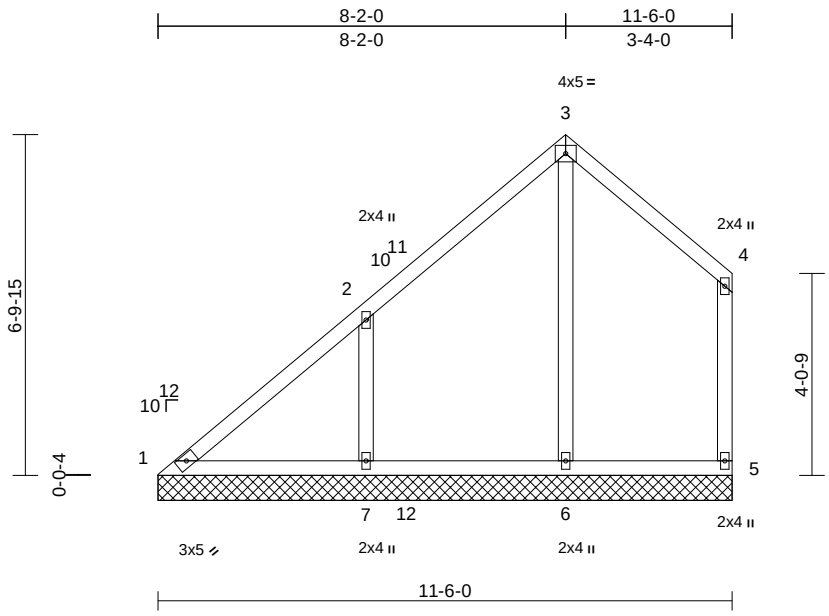

Scale = 1:46.2

Loading	(psf)	Spacing	2-0-0	CSI		DEFL	in	(loc)	l/defl	L/d	PLATES	GRIP
TCLL (roof)	20.0	Plate Grip DOL	1.15	TC	0.30	Vert(LL)	n/a	-	n/a	999	MT20	244/190
Snow (Pf)	20.0	Lumber DOL	1.15	BC	0.17	Vert(TL)	n/a	-	n/a	999		
TCDL	10.0	Rep Stress Incr	YES	WB	0.20	Horiz(TL)	0.00	5	n/a	n/a		
BCLL	0.0*	Code	IRC2018/TPI2014	Matrix-MSH								
BCDL	10.0										Weight: 58 lb	FT = 20%

LUMBER

TOP CHORD 2x4 SP No.2
BOT CHORD 2x4 SP No.2
WEBS 2x4 SP No.3
OTHERS 2x4 SP No.3

BRACING

TOP CHORD Structural wood sheathing directly applied or 6-0-0 oc purlins, except end verticals.
BOT CHORD Rigid ceiling directly applied or 10-0-0 oc bracing.

REACTIONS (size) 1=11-6-0, 5=11-6-0, 6=11-6-0, 7=11-6-0
Max Horiz 1=203 (LC 11)
Max Uplift 1=-43 (LC 10), 5=-53 (LC 10), 6=-29 (LC 11), 7=-179 (LC 14)
Max Grav 1=203 (LC 25), 5=206 (LC 6), 6=412 (LC 24), 7=504 (LC 24)

FORCES (lb) - Maximum Compression/Maximum Tension
TOP CHORD 1-2=-265/177, 2-3=-178/158, 3-4=-124/174, 4-5=-176/144
BOT CHORD 1-7=-54/210, 6-7=-46/70, 5-6=-46/70
WEBS 3-6=-250/80, 2-7=-365/245

NOTES

1) Unbalanced roof live loads have been considered for this design.
2) Wind: ASCE 7-16; Vult=130mph (3-second gust) Vasd=103mph; TCDL=6.0psf; BCDL=6.0psf; h=25ft; Cat. II; Exp B; Enclosed; MWFRS (envelope) exterior zone and C-C Exterior(2E) 0-0-5 to 3-0-5, Interior (1) 3-0-5 to 5-2-5, Exterior(2R) 5-2-5 to 8-2-5, Exterior(2E) 8-2-5 to 11-4-9 zone; cantilever left and right exposed ; end vertical left and right exposed;C-C for members and forces & MWFRS for reactions shown; Lumber DOL=1.60 plate grip DOL=1.60
3) Truss designed for wind loads in the plane of the truss only. For studs exposed to wind (normal to the face), see Standard Industry Gable End Details as applicable, or consult qualified building designer as per ANSI/TPI 1.
4) TCLL: ASCE 7-16; Pr=20.0 psf (roof LL: Lum DOL=1.15 Plate DOL=1.15); Pf=20.0 psf (Lum DOL=1.15 Plate DOL=1.15); Is=1.0; Rough Cat B; Fully Exp.; Ce=0.9; Cs=1.00; Ct=1.10
5) Unbalanced snow loads have been considered for this design.
6) Gable requires continuous bottom chord bearing.
7) Gable studs spaced at 4-0-0 oc.
8) This truss has been designed for a 10.0 psf bottom chord live load nonconcurrent with any other live loads.
9) * This truss has been designed for a live load of 20.0psf on the bottom chord in all areas where a rectangle 3-06-00 tall by 2-00-00 wide will fit between the bottom chord and any other members, with BCDL = 10.0psf.
10) Provide mechanical connection (by others) of truss to bearing plate capable of withstanding 53 lb uplift at joint 5, 43 lb uplift at joint 1, 29 lb uplift at joint 6 and 179 lb uplift at joint 7.
11) This truss is designed in accordance with the 2018 International Residential Code sections R502.11.1 and R802.10.2 and referenced standard ANSI/TPI 1.

LOAD CASE(S) Standard

June 16,2025

WARNING - Verify design parameters and READ NOTES ON THIS AND INCLUDED MITEK REFERENCE PAGE MII-7473 rev. 1/2/2023 BEFORE USE.
Design valid for use only with MiTek® connectors. This design is based only upon parameters shown, and is for an individual building component, not a truss system. Before use, the building designer must verify the applicability of design parameters and properly incorporate this design into the overall building design. Bracing indicated is to prevent buckling of individual truss web and/or chord members only. Additional temporary and permanent bracing is always required for stability and to prevent collapse with possible personal injury and property damage. For general guidance regarding the fabrication, storage, delivery, erection and bracing of trusses and truss systems, see **ANSI/TPI1 Quality Criteria and DSB-22** available from Truss Plate Institute (www.tpinst.org) and **BCSI Building Component Safety Information** available from the Structural Building Component Association (www.sbcacomponents.com)

ENGINEERING BY TRENCO A MiTek Affiliate
818 Soundside Road
Edenton, NC 27932

Job	Truss	Truss Type	Qty	Ply	926 Serenity-Roof-329 A CP GLH
25060033-01	VLD3	Valley	1	1	I74200613 Job Reference (optional)

Carter Components (Sanford, NC), Sanford, NC - 27332,

Run: 8.73 S Feb 19 2025 Print: 8.730 S Feb 19 2025 MiTek Industries, Inc. Fri Jun 13 10:53:35 Page: 1
ID:vAVBsNisdZRLs81UW9iY4Kyi377-RfC?PsB70Hq3NSgPqnL8w3uITXbGKWrCDoi7J4zJC?f

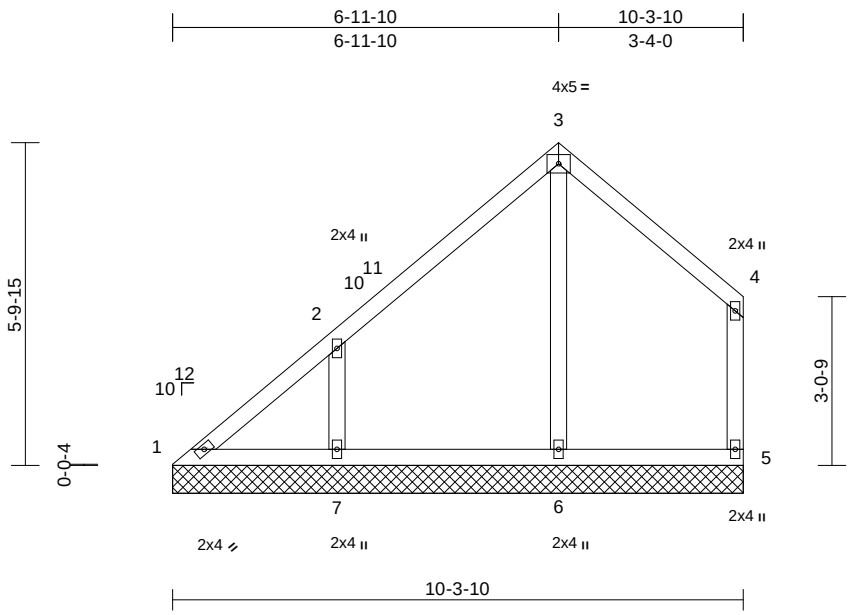

Scale = 1:41.6

Loading	(psf)	Spacing	2-0-0	CSI		DEFL	in	(loc)	l/defl	L/d	PLATES	GRIP
TCLL (roof)	20.0	Plate Grip DOL	1.15	TC	0.30	Vert(LL)	n/a	-	n/a	999	MT20	244/190
Snow (Pf)	20.0	Lumber DOL	1.15	BC	0.10	Vert(TL)	n/a	-	n/a	999		
TCDL	10.0	Rep Stress Incr	YES	WB	0.14	Horiz(TL)	0.00	5	n/a	n/a		
BCLL	0.0*	Code	IRC2018/TPI2014	Matrix-MSH								
BCDL	10.0										Weight: 49 lb	FT = 20%

LUMBER

TOP CHORD 2x4 SP No.2
BOT CHORD 2x4 SP No.2
WEBS 2x4 SP No.3
OTHERS 2x4 SP No.3

BRACING

TOP CHORD Structural wood sheathing directly applied or 6-0-0 oc purlins, except end verticals.
BOT CHORD Rigid ceiling directly applied or 10-0-0 oc bracing.

REACTIONS (size) 1=10-3-10, 5=10-3-10, 6=10-3-10, 7=10-3-10
Max Horiz 1=167 (LC 11)
Max Uplift 1=-49 (LC 10), 5=-53 (LC 15), 6=-20 (LC 11), 7=-151 (LC 14)
Max Grav 1=143 (LC 25), 5=209 (LC 21), 6=308 (LC 20), 7=397 (LC 20)

FORCES (lb) - Maximum Compression/Maximum Tension
TOP CHORD 1-2=-184/156, 2-3=-165/139, 3-4=-130/155, 4-5=-182/135
BOT CHORD 1-7=-39/126, 6-7=-35/49, 5-6=-35/49
WEBS 3-6=-235/69, 2-7=-326/243

NOTES

1) Unbalanced roof live loads have been considered for this design.
2) Wind: ASCE 7-16; Vult=130mph (3-second gust) Vasd=103mph; TCDL=6.0psf; BCDL=6.0psf; h=25ft; Cat. II; Exp B; Enclosed; MWFRS (envelope) exterior zone and C-C Exterior(2E) 0-0-5 to 2-11-14, Interior (1) 2-11-14 to 3-11-14, Exterior(2R) 3-11-14 to 6-11-14, Exterior(2E) 6-11-14 to 10-2-2 zone; cantilever left and right exposed ; end vertical left and right exposed;C-C for members and forces & MWFRS for reactions shown; Lumber DOL=1.60 plate grip DOL=1.60
3) Truss designed for wind loads in the plane of the truss only. For studs exposed to wind (normal to the face), see Standard Industry Gable End Details as applicable, or consult qualified building designer as per ANSI/TPI 1.
4) TCLL: ASCE 7-16; Pr=20.0 psf (roof LL: Lum DOL=1.15 Plate DOL=1.15); Pf=20.0 psf (Lum DOL=1.15 Plate DOL=1.15); Is=1.0; Rough Cat B; Fully Exp.; Ce=0.9; Cs=1.00; Ct=1.10
5) Unbalanced snow loads have been considered for this design.
6) Gable requires continuous bottom chord bearing.
7) Gable studs spaced at 4-0-0 oc.
8) This truss has been designed for a 10.0 psf bottom chord live load nonconcurrent with any other live loads.
9) * This truss has been designed for a live load of 20.0psf on the bottom chord in all areas where a rectangle 3-06-00 tall by 2-00-00 wide will fit between the bottom chord and any other members.
10) Provide mechanical connection (by others) of truss to bearing plate capable of withstanding 53 lb uplift at joint 5, 49 lb uplift at joint 1, 20 lb uplift at joint 6 and 151 lb uplift at joint 7.
11) This truss is designed in accordance with the 2018 International Residential Code sections R502.11.1 and R802.10.2 and referenced standard ANSI/TPI 1.

LOAD CASE(S) Standard

June 16,2025

WARNING - Verify design parameters and READ NOTES ON THIS AND INCLUDED MITEK REFERENCE PAGE MII-7473 rev. 1/2/2023 BEFORE USE.
Design valid for use only with MiTek® connectors. This design is based only upon parameters shown, and is for an individual building component, not a truss system. Before use, the building designer must verify the applicability of design parameters and properly incorporate this design into the overall building design. Bracing indicated is to prevent buckling of individual truss web and/or chord members only. Additional temporary and permanent bracing is always required for stability and to prevent collapse with possible personal injury and property damage. For general guidance regarding the fabrication, storage, delivery, erection and bracing of trusses and truss systems, see **ANSI/TPI1 Quality Criteria and DSB-22** available from Truss Plate Institute (www.tpinst.org) and **BCSI Building Component Safety Information** available from the Structural Building Component Association (www.sbcacomponents.com)

ENGINEERING BY TRENCO A MiTek Affiliate
818 Soundside Road
Edenton, NC 27932

Job	Truss	Truss Type	Qty	Ply	926 Serenity-Roof-329 A CP GLH
25060033-01	VLD4	Valley	1	1	I74200614 Job Reference (optional)

Carter Components (Sanford, NC), Sanford, NC - 27332, Run: 8.73 S Feb 19 2025 Print: 8.730 S Feb 19 2025 MiTek Industries, Inc. Fri Jun 13 10:53:35 Page: 1
ID:vAVBsNisdZRLs81UW9iY4Kyi377-RfC?PsB70Hq3NSgPqnL8w3uITXbGKWrCDoi7J4zJC?f

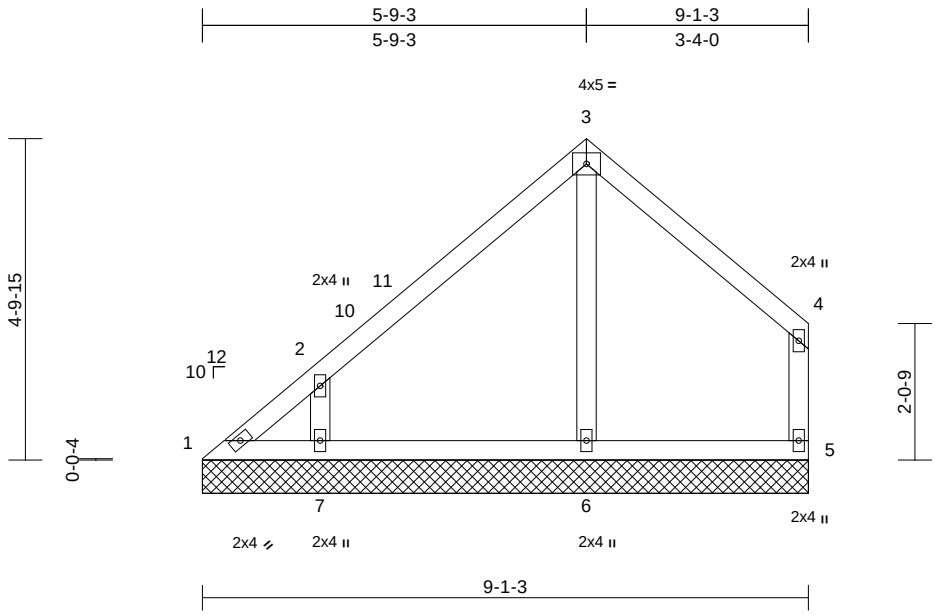

Scale = 1:34.6

Loading	(psf)	Spacing	2-0-0	CSI		DEFL	in	(loc)	l/defl	L/d	PLATES	GRIP
TCLL (roof)	20.0	Plate Grip DOL	1.15	TC	0.29	Vert(LL)	n/a	-	n/a	999	MT20	244/190
Snow (Pf)	20.0	Lumber DOL	1.15	BC	0.11	Vert(TL)	n/a	-	n/a	999		
TCDL	10.0	Rep Stress Incr	YES	WB	0.09	Horiz(TL)	0.00	5	n/a	n/a		
BCLL	0.0*	Code	IRC2018/TPI2014	Matrix-MSH								
BCDL	10.0										Weight: 41 lb	FT = 20%

LUMBER

TOP CHORD	2x4 SP No.2
BOT CHORD	2x4 SP No.2
WEBS	2x4 SP No.3
OTHERS	2x4 SP No.3

BRACING

TOP CHORD	Structural wood sheathing directly applied or 6-0-0 oc purlins, except end verticals.
BOT CHORD	Rigid ceiling directly applied or 10-0-0 oc bracing.

REACTIONS (size) 1=9-1-3, 5=9-1-3, 6=9-1-3, 7=9-1-3
Max Horiz 1=131 (LC 11)
Max Uplift 1=-61 (LC 10), 5=-60 (LC 15), 6=-11 (LC 11), 7=-136 (LC 14)
Max Grav 1=96 (LC 13), 5=222 (LC 21), 6=301 (LC 20), 7=379 (LC 20)

FORCES (lb) - Maximum Compression/Maximum Tension
TOP CHORD 1-2=-160/148, 2-3=-162/127, 3-4=-148/142, 4-5=-195/131
BOT CHORD 1-7=-27/43, 6-7=-24/43, 5-6=-24/43
WEBS 3-6=-219/59, 2-7=-357/282

NOTES

1) Unbalanced roof live loads have been considered for this design.
2) Wind: ASCE 7-16; Vult=130mph (3-second gust) Vasd=103mph; TCDL=6.0psf; BCDL=6.0psf; h=25ft; Cat. II; Exp B; Enclosed; MWFRS (envelope) exterior zone and C-C Exterior(2E) 0-0-5 to 3-0-5, Exterior(2R) 3-0-5 to 5-9-8, Exterior(2E) 5-9-8 to 8-11-12 zone; cantilever left and right exposed ; end vertical left and right exposed;C-C for members and forces & MWFRS for reactions shown; Lumber DOL=1.60 plate grip DOL=1.60
3) Truss designed for wind loads in the plane of the truss only. For studs exposed to wind (normal to the face), see Standard Industry Gable End Details as applicable, or consult qualified building designer as per ANSI/TPI 1.
4) TCLL: ASCE 7-16; Pr=20.0 psf (roof LL: Lum DOL=1.15 Plate DOL=1.15); Pf=20.0 psf (Lum DOL=1.15 Plate DOL=1.15); Is=1.0; Rough Cat B; Fully Exp.; Ce=0.9; Cs=1.00; Ct=1.10
5) Unbalanced snow loads have been considered for this design.
6) Gable requires continuous bottom chord bearing.
7) Gable studs spaced at 4-0-0 oc.
8) This truss has been designed for a 10.0 psf bottom chord live load nonconcurrent with any other live loads.
9) * This truss has been designed for a live load of 20.0psf on the bottom chord in all areas where a rectangle 3-06-00 tall by 2-00-00 wide will fit between the bottom chord and any other members.
10) Provide mechanical connection (by others) of truss to bearing plate capable of withstanding 61 lb uplift at joint 1, 60 lb uplift at joint 5, 11 lb uplift at joint 6 and 136 lb uplift at joint 7.
11) This truss is designed in accordance with the 2018 International Residential Code sections R502.11.1 and R802.10.2 and referenced standard ANSI/TPI 1.

LOAD CASE(S) Standard

June 16,2025

WARNING - Verify design parameters and READ NOTES ON THIS AND INCLUDED MITEK REFERENCE PAGE MII-7473 rev. 1/2/2023 BEFORE USE.
Design valid for use only with MiTek® connectors. This design is based only upon parameters shown, and is for an individual building component, not a truss system. Before use, the building designer must verify the applicability of design parameters and properly incorporate this design into the overall building design. Bracing indicated is to prevent buckling of individual truss web and/or chord members only. Additional temporary and permanent bracing is always required for stability and to prevent collapse with possible personal injury and property damage. For general guidance regarding the fabrication, storage, delivery, erection and bracing of trusses and truss systems, see **ANSI/TPI1 Quality Criteria and DSB-22** available from Truss Plate Institute (www.tpinst.org) and **BCSI Building Component Safety Information** available from the Structural Building Component Association (www.sbcacomponents.com)

ENGINEERING BY TRENCO A MiTek Affiliate
818 Soundside Road
Edenton, NC 27932

Job	Truss	Truss Type	Qty	Ply	926 Serenity-Roof-329 A CP GLH
25060033-01	VLD5	Valley	1	1	I74200615 Job Reference (optional)

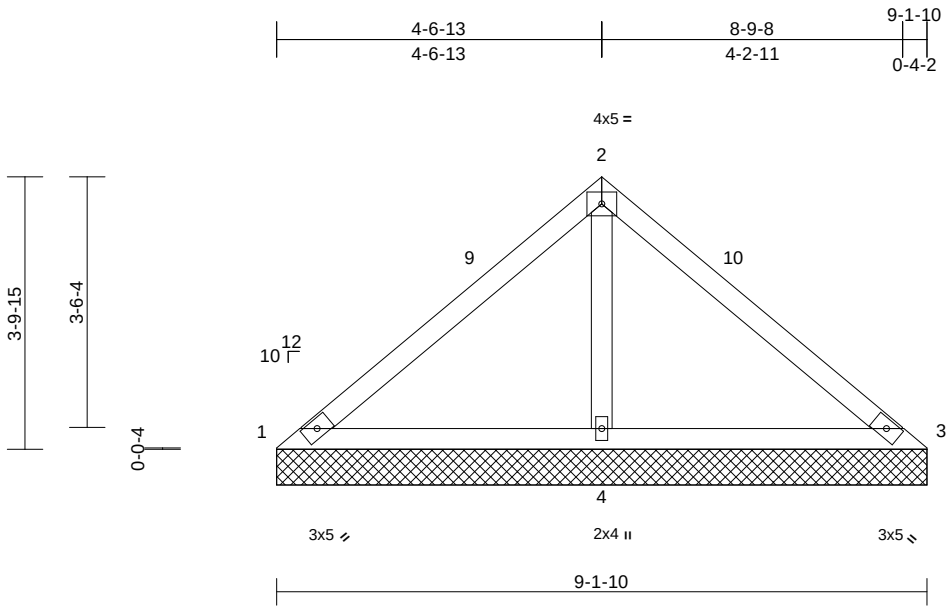

Scale = 1:32.4

Loading	(psf)	Spacing	2-0-0	CSI		DEFL	in	(loc)	l/defl	L/d	PLATES	GRIP
TCLL (roof)	20.0	Plate Grip DOL	1.15	TC	0.39	Vert(LL)	n/a	-	n/a	999	MT20	244/190
Snow (Pf)	20.0	Lumber DOL	1.15	BC	0.38	Vert(TL)	n/a	-	n/a	999		
TCDL	10.0	Rep Stress Incr	YES	WB	0.16	Horiz(TL)	0.00	4	n/a	n/a		
BCLL	0.0*	Code	IRC2018/TPI2014	Matrix-MSH								
BCDL	10.0										Weight: 35 lb	FT = 20%

LUMBER
TOP CHORD 2x4 SP No.2
BOT CHORD 2x4 SP No.2
OTHERS 2x4 SP No.3

BRACING
TOP CHORD Structural wood sheathing directly applied or 9-1-10 oc purlins.
BOT CHORD Rigid ceiling directly applied or 6-0-0 oc bracing.

REACTIONS (size) 1=9-1-10, 3=9-1-10, 4=9-1-10
Max Horiz 1=-85 (LC 12)
Max Uplift 1=-37 (LC 21), 3=-37 (LC 20), 4=-98 (LC 14)
Max Grav 1=96 (LC 20), 3=96 (LC 21), 4=711 (LC 20)

FORCES (lb) - Maximum Compression/Maximum Tension
TOP CHORD 1-2=-103/337, 2-3=-103/337
BOT CHORD 1-4=-221/162, 3-4=-221/162
WEBS 2-4=-586/254

NOTES
1) Unbalanced roof live loads have been considered for this design.
2) Wind: ASCE 7-16; Vult=130mph (3-second gust) Vasd=103mph; TCDL=6.0psf; BCDL=6.0psf; h=25ft; Cat. II; Exp B; Enclosed; MWFRS (envelope) exterior zone and C-C Exterior(2E) 0-0-5 to 3-0-5, Exterior(2R) 3-0-5 to 6-1-15, Exterior(2E) 6-1-15 to 9-1-15 zone; cantilever left and right exposed ; end vertical left and right exposed;C-C for members and forces & MWFRS for reactions shown; Lumber DOL=1.60 plate grip DOL=1.60
3) Truss designed for wind loads in the plane of the truss only. For studs exposed to wind (normal to the face), see Standard Industry Gable End Details as applicable, or consult qualified building designer as per ANSI/TPI 1.
4) TCLL: ASCE 7-16; Pr=20.0 psf (roof LL: Lum DOL=1.15 Plate DOL=1.15); Pf=20.0 psf (Lum DOL=1.15 Plate DOL=1.15); Is=1.0; Rough Cat B; Fully Exp.; Ce=0.9; Cs=1.00; Ct=1.10
5) Unbalanced snow loads have been considered for this design.
6) Gable requires continuous bottom chord bearing.
7) Gable studs spaced at 4-0-0 oc.
8) This truss has been designed for a 10.0 psf bottom chord live load nonconcurrent with any other live loads.
9) * This truss has been designed for a live load of 20.0psf on the bottom chord in all areas where a rectangle 3-06-00 tall by 2-00-00 wide will fit between the bottom chord and any other members.
10) Provide mechanical connection (by others) of truss to bearing plate capable of withstanding 37 lb uplift at joint 1, 37 lb uplift at joint 3 and 98 lb uplift at joint 4.
11) This truss is designed in accordance with the 2018 International Residential Code sections R502.11.1 and R802.10.2 and referenced standard ANSI/TPI 1.

LOAD CASE(S) Standard

June 16,2025

WARNING - Verify design parameters and READ NOTES ON THIS AND INCLUDED MITEK REFERENCE PAGE MII-7473 rev. 1/2/2023 BEFORE USE.
Design valid for use only with MiTek® connectors. This design is based only upon parameters shown, and is for an individual building component, not a truss system. Before use, the building designer must verify the applicability of design parameters and properly incorporate this design into the overall building design. Bracing indicated is to prevent buckling of individual truss web and/or chord members only. Additional temporary and permanent bracing is always required for stability and to prevent collapse with possible personal injury and property damage. For general guidance regarding the fabrication, storage, delivery, erection and bracing of trusses and truss systems, see **ANSI/TPI1 Quality Criteria and DSB-22** available from Truss Plate Institute (www.tpinst.org) and **BCSI Building Component Safety Information** available from the Structural Building Component Association (www.sbcacomponents.com)

ENGINEERING BY TRENCO A MiTek Affiliate
818 Soundside Road
Edenton, NC 27932

Job	Truss	Truss Type	Qty	Ply	926 Serenity-Roof-329 A CP GLH
25060033-01	VLD6	Valley	1	1	I74200616 Job Reference (optional)

Carter Components (Sanford, NC), Sanford, NC - 27332,

Run: 8.73 S Feb 19 2025 Print: 8.730 S Feb 19 2025 MiTek Industries, Inc. Fri Jun 13 10:53:35 Page: 1
ID:NM3Z3jjUOsZCUIcg4sDncXyi376-RfC?PsB70Hq3NSgPqnL8w3uITXbGKWrCDoi7J4zJC?f

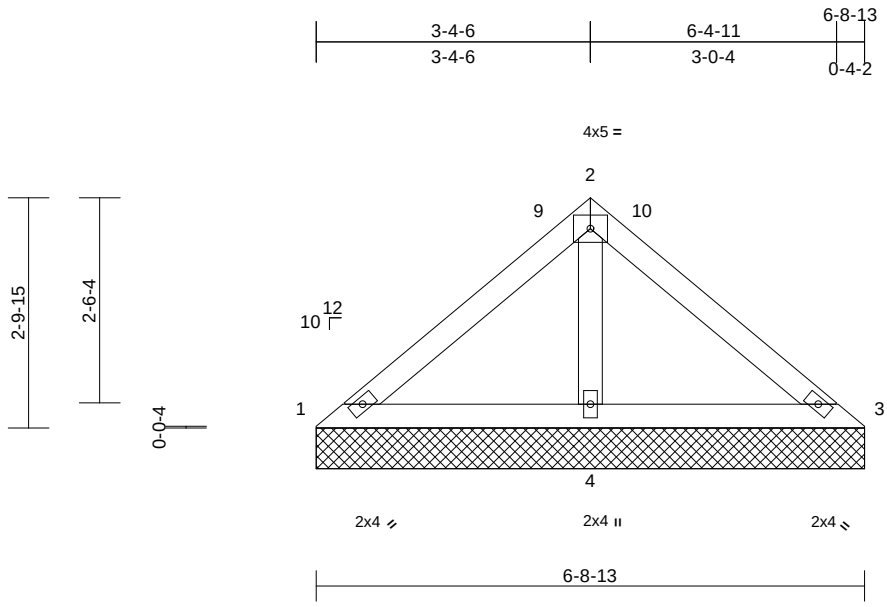

Scale = 1:28.3

Loading	(psf)	Spacing	2-0-0	CSI		DEFL	in	(loc)	l/defl	L/d	PLATES	GRIP
TCLL (roof)	20.0	Plate Grip DOL	1.15	TC	0.21	Vert(LL)	n/a	-	n/a	999	MT20	244/190
Snow (Pf)	20.0	Lumber DOL	1.15	BC	0.23	Vert(TL)	n/a	-	n/a	999		
TCDL	10.0	Rep Stress Incr	YES	WB	0.07	Horiz(TL)	0.00	4	n/a	n/a		
BCLL	0.0*	Code	IRC2018/TPI2014	Matrix-MP								
BCDL	10.0										Weight: 25 lb	FT = 20%

LUMBER
TOP CHORD 2x4 SP No.2
BOT CHORD 2x4 SP No.2
OTHERS 2x4 SP No.3

BRACING
TOP CHORD Structural wood sheathing directly applied or 6-8-13 oc purlins.
BOT CHORD Rigid ceiling directly applied or 6-0-0 oc bracing.

REACTIONS (size) 1=6-8-13, 3=6-8-13, 4=6-8-13
Max Horiz 1=-62 (LC 10)
Max Uplift 1=-8 (LC 21), 3=-8 (LC 20), 4=-63 (LC 14)
Max Grav 1=103 (LC 20), 3=103 (LC 21), 4=477 (LC 21)

FORCES (lb) - Maximum Compression/Maximum Tension
TOP CHORD 1-2=-87/198, 2-3=-87/198
BOT CHORD 1-4=-157/139, 3-4=-157/139
WEBS 2-4=-373/178

NOTES
1) Unbalanced roof live loads have been considered for this design.
2) Wind: ASCE 7-16; Vult=130mph (3-second gust) Vasd=103mph; TCDL=6.0psf; BCDL=6.0psf; h=25ft; Cat. II; Exp B; Enclosed; MWFRS (envelope) exterior zone and C-C Exterior(2E) 0-0-5 to 3-0-5, Exterior(2R) 3-0-5 to 3-9-2, Exterior(2E) 3-9-2 to 6-9-2 zone; cantilever left and right exposed ; end vertical left and right exposed;C-C for members and forces & MWFRS for reactions shown; Lumber DOL=1.60 plate grip DOL=1.60
3) Truss designed for wind loads in the plane of the truss only. For studs exposed to wind (normal to the face), see Standard Industry Gable End Details as applicable, or consult qualified building designer as per ANSI/TPI 1.
4) TCLL: ASCE 7-16; Pr=20.0 psf (roof LL: Lum DOL=1.15 Plate DOL=1.15); Pf=20.0 psf (Lum DOL=1.15 Plate DOL=1.15); Is=1.0; Rough Cat B; Fully Exp.; Ce=0.9; Cs=1.00; Ct=1.10
5) Unbalanced snow loads have been considered for this design.
6) Gable requires continuous bottom chord bearing.
7) Gable studs spaced at 4-0-0 oc.
8) This truss has been designed for a 10.0 psf bottom chord live load nonconcurrent with any other live loads.
9) * This truss has been designed for a live load of 20.0psf on the bottom chord in all areas where a rectangle 3-06-00 tall by 2-00-00 wide will fit between the bottom chord and any other members.
10) Provide mechanical connection (by others) of truss to bearing plate capable of withstanding 8 lb uplift at joint 1, 8 lb uplift at joint 3 and 63 lb uplift at joint 4.
11) This truss is designed in accordance with the 2018 International Residential Code sections R502.11.1 and R802.10.2 and referenced standard ANSI/TPI 1.

LOAD CASE(S) Standard

June 16,2025

WARNING - Verify design parameters and READ NOTES ON THIS AND INCLUDED MITEK REFERENCE PAGE MII-7473 rev. 1/2/2023 BEFORE USE.
Design valid for use only with MiTek® connectors. This design is based only upon parameters shown, and is for an individual building component, not a truss system. Before use, the building designer must verify the applicability of design parameters and properly incorporate this design into the overall building design. Bracing indicated is to prevent buckling of individual truss web and/or chord members only. Additional temporary and permanent bracing is always required for stability and to prevent collapse with possible personal injury and property damage. For general guidance regarding the fabrication, storage, delivery, erection and bracing of trusses and truss systems, see **ANSI/TPI1 Quality Criteria and DSB-22** available from Truss Plate Institute (www.tpinst.org) and **BCSI Building Component Safety Information** available from the Structural Building Component Association (www.sbcacomponents.com)

ENGINEERING BY TRENCO A MiTek Affiliate
818 Soundside Road
Edenton, NC 27932

Job	Truss	Truss Type	Qty	Ply	926 Serenity-Roof-329 A CP GLH
25060033-01	VLD7	Valley	1	1	I74200617 Job Reference (optional)

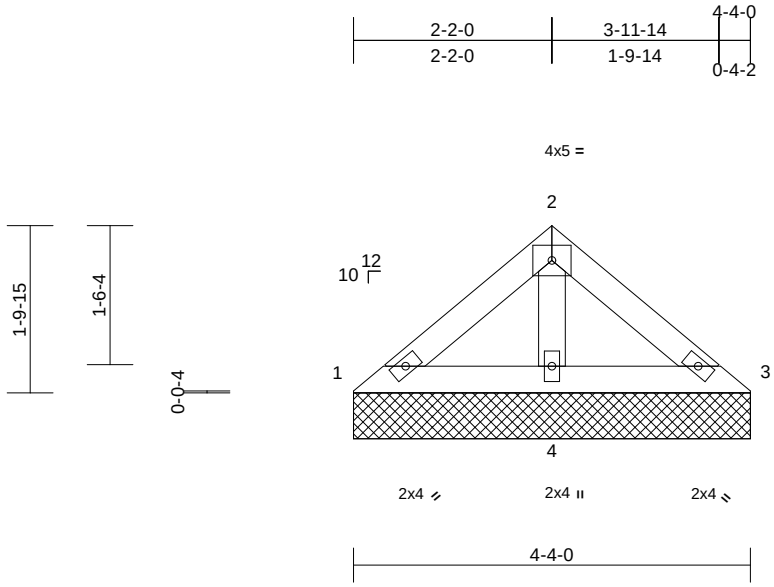

Scale = 1:25.2

Loading	(psf)	Spacing	2-0-0	CSI		DEFL	in	(loc)	l/defl	L/d	PLATES	GRIP
TCLL (roof)	20.0	Plate Grip DOL	1.15	TC	0.06	Vert(LL)	n/a	-	n/a	999	MT20	244/190
Snow (Pf)	20.0	Lumber DOL	1.15	BC	0.08	Vert(TL)	n/a	-	n/a	999		
TCDL	10.0	Rep Stress Incr	YES	WB	0.03	Horiz(TL)	0.00	4	n/a	n/a		
BCLL	0.0*	Code	IRC2018/TPI2014	Matrix-MP								
BCDL	10.0										Weight: 15 lb	FT = 20%

LUMBER
TOP CHORD 2x4 SP No.2
BOT CHORD 2x4 SP No.2
OTHERS 2x4 SP No.3

BRACING
TOP CHORD Structural wood sheathing directly applied or 4-4-0 oc purlins.
BOT CHORD Rigid ceiling directly applied or 6-0-0 oc bracing.

REACTIONS (size) 1=4-4-0, 3=4-4-0, 4=4-4-0
Max Horiz 1=-38 (LC 10)
Max Uplift 1=-1 (LC 14), 3=-8 (LC 15), 4=-27 (LC 14)
Max Grav 1=82 (LC 20), 3=82 (LC 21), 4=252 (LC 20)

FORCES (lb) - Maximum Compression/Maximum Tension
TOP CHORD 1-2=-74/83, 2-3=-74/83
BOT CHORD 1-4=-67/73, 3-4=-67/73
WEBS 2-4=-170/74

NOTES
1) Unbalanced roof live loads have been considered for this design.
2) Wind: ASCE 7-16; Vult=130mph (3-second gust) Vasd=103mph; TCDL=6.0psf; BCDL=6.0psf; h=25ft; Cat. II; Exp B; Enclosed; MWFRS (envelope) exterior zone and C-C Exterior(2E) zone; cantilever left and right exposed ; end vertical left and right exposed;C-C for members and forces & MWFRS for reactions shown; Lumber DOL=1.60 plate grip DOL=1.60
3) Truss designed for wind loads in the plane of the truss only. For studs exposed to wind (normal to the face), see Standard Industry Gable End Details as applicable, or consult qualified building designer as per ANSI/TPI 1.
4) TCLL: ASCE 7-16; Pr=20.0 psf (roof LL: Lum DOL=1.15 Plate DOL=1.15); Pf=20.0 psf (Lum DOL=1.15 Plate DOL=1.15); Is=1.0; Rough Cat B; Fully Exp.; Ce=0.9; Cs=1.00; Ct=1.10
5) Unbalanced snow loads have been considered for this design.
6) Gable requires continuous bottom chord bearing.
7) Gable studs spaced at 4-0-0 oc.
8) This truss has been designed for a 10.0 psf bottom chord live load nonconcurrent with any other live loads.
9) * This truss has been designed for a live load of 20.0psf on the bottom chord in all areas where a rectangle 3-06-00 tall by 2-00-00 wide will fit between the bottom chord and any other members.
10) Provide mechanical connection (by others) of truss to bearing plate capable of withstanding 1 lb uplift at joint 1, 8 lb uplift at joint 3 and 27 lb uplift at joint 4.
11) This truss is designed in accordance with the 2018 International Residential Code sections R502.11.1 and R802.10.2 and referenced standard ANSI/TPI 1.

LOAD CASE(S) Standard

June 16,2025

WARNING - Verify design parameters and READ NOTES ON THIS AND INCLUDED MITEK REFERENCE PAGE MII-7473 rev. 1/2/2023 BEFORE USE.
Design valid for use only with MiTek® connectors. This design is based only upon parameters shown, and is for an individual building component, not a truss system. Before use, the building designer must verify the applicability of design parameters and properly incorporate this design into the overall building design. Bracing indicated is to prevent buckling of individual truss web and/or chord members only. Additional temporary and permanent bracing is always required for stability and to prevent collapse with possible personal injury and property damage. For general guidance regarding the fabrication, storage, delivery, erection and bracing of trusses and truss systems, see **ANSI/TPI1 Quality Criteria and DSB-22** available from Truss Plate Institute (www.tpinst.org) and **BCSI Building Component Safety Information** available from the Structural Building Component Association (www.sbcacomponents.com)

ENGINEERING BY TRENCO A MiTek Affiliate
818 Soundside Road
Edenton, NC 27932

Job	Truss	Truss Type	Qty	Ply	926 Serenity-Roof-329 A CP GLH
25060033-01	VLG1	Valley	1	1	I74200618 Job Reference (optional)

Carter Components (Sanford, NC), Sanford, NC - 27332,

Run: 8.73 S Feb 19 2025 Print: 8.730 S Feb 19 2025 MiTek Industries, Inc. Fri Jun 13 10:53:36 Page: 1
ID:Y15h7GgdScsbER4SWOvSfXyiMOB-RfC?PsB70Hq3NSgPqnL8w3uITXbGKWrCDoi7J4zJC?f

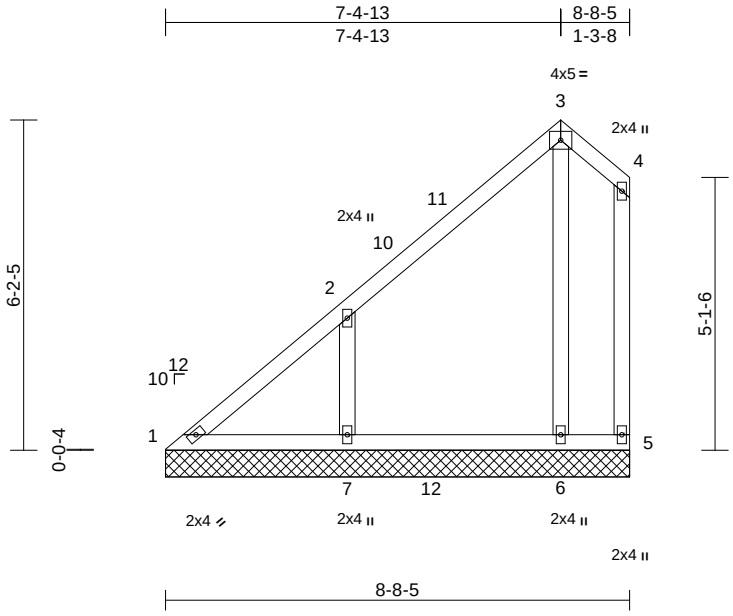

Scale = 1:43.2

Loading	(psf)	Spacing	2-0-0	CSI		DEFL	in	(loc)	l/defl	L/d	PLATES	GRIP
TCLL (roof)	20.0	Plate Grip DOL	1.15	TC	0.25	Vert(LL)	n/a	-	n/a	999	MT20	244/190
Snow (Pf)	20.0	Lumber DOL	1.15	BC	0.13	Vert(TL)	n/a	-	n/a	999		
TCDL	10.0	Rep Stress Incr	YES	WB	0.10	Horiz(TL)	0.00	5	n/a	n/a		
BCLL	0.0*	Code	IRC2018/TPI2014	Matrix-MP								
BCDL	10.0										Weight: 48 lb	FT = 20%

LUMBER

TOP CHORD	2x4 SP No.2
BOT CHORD	2x4 SP No.2
WEBS	2x4 SP No.3
OTHERS	2x4 SP No.3

BRACING

TOP CHORD	Structural wood sheathing directly applied or 6-0-0 oc purlins, except end verticals.
BOT CHORD	Rigid ceiling directly applied or 10-0-0 oc bracing.

REACTIONS (size) 1=8-8-5, 5=8-8-5, 6=8-8-5, 7=8-8-5
Max Horiz 1=200 (LC 14)
Max Uplift 5=-33 (LC 15), 6=-19 (LC 14), 7=-168 (LC 14)
Max Grav 1=141 (LC 26), 5=55 (LC 21), 6=295 (LC 24), 7=463 (LC 24)

FORCES (lb) - Maximum Compression/Maximum Tension
TOP CHORD 1-2=-261/172, 2-3=-103/65, 3-4=-31/32, 4-5=-61/38
BOT CHORD 1-7=-68/118, 6-7=0/0, 5-6=0/0
WEBS 3-6=-151/87, 2-7=-374/298

NOTES

1) Unbalanced roof live loads have been considered for this design.
2) Wind: ASCE 7-16; Vult=130mph (3-second gust) Vasd=103mph; TCDL=6.0psf; BCDL=6.0psf; h=25ft; Cat. II; Exp B; Enclosed; MWFRS (envelope) exterior zone and C-C Exterior(2E) 0-0-5 to 3-0-5, Interior (1) 3-0-5 to 4-5-2, Exterior(2R) 4-5-2 to 7-5-2, Exterior(2E) 7-5-2 to 8-6-14 zone;C-C for members and forces & MWFRS for reactions shown; Lumber DOL=1.60 plate grip DOL=1.60
3) Truss designed for wind loads in the plane of the truss only. For studs exposed to wind (normal to the face), see Standard Industry Gable End Details as applicable, or consult qualified building designer as per ANSI/TPI 1.
4) TCLL: ASCE 7-16; Pr=20.0 psf (roof LL: Lum DOL=1.15 Plate DOL=1.15); Pf=20.0 psf (Lum DOL=1.15 Plate DOL=1.15); Is=1.0; Rough Cat B; Fully Exp.; Ce=0.9; Cs=1.00; Ct=1.10
5) Unbalanced snow loads have been considered for this design.
6) Gable requires continuous bottom chord bearing.
7) Gable studs spaced at 4-0-0 oc.
8) This truss has been designed for a 10.0 psf bottom chord live load nonconcurrent with any other live loads.
9) * This truss has been designed for a live load of 20.0psf on the bottom chord in all areas where a rectangle 3-06-00 tall by 2-00-00 wide will fit between the bottom chord and any other members, with BCDL = 10.0psf.
10) Provide mechanical connection (by others) of truss to bearing plate capable of withstanding 33 lb uplift at joint 5, 19 lb uplift at joint 6 and 168 lb uplift at joint 7.
11) This truss is designed in accordance with the 2018 International Residential Code sections R502.11.1 and R802.10.2 and referenced standard ANSI/TPI 1.

LOAD CASE(S) Standard

June 16,2025

WARNING - Verify design parameters and READ NOTES ON THIS AND INCLUDED MITEK REFERENCE PAGE MII-7473 rev. 1/2/2023 BEFORE USE.
Design valid for use only with MiTek® connectors. This design is based only upon parameters shown, and is for an individual building component, not a truss system. Before use, the building designer must verify the applicability of design parameters and properly incorporate this design into the overall building design. Bracing indicated is to prevent buckling of individual truss web and/or chord members only. Additional temporary and permanent bracing is always required for stability and to prevent collapse with possible personal injury and property damage. For general guidance regarding the fabrication, storage, delivery, erection and bracing of trusses and truss systems, see **ANSI/TPI1 Quality Criteria and DSB-22** available from Truss Plate Institute (www.tpinst.org) and **BCSI Building Component Safety Information** available from the Structural Building Component Association (www.sbcacomponents.com)

ENGINEERING BY TRENCO A MiTek Affiliate
818 Soundside Road
Edenton, NC 27932

Job	Truss	Truss Type	Qty	Ply	926 Serenity-Roof-329 A CP GLH
25060033-01	VLG2	Valley	1	1	I74200619 Job Reference (optional)

Carter Components (Sanford, NC), Sanford, NC - 27332,

Run: 8.73 S Feb 19 2025 Print: 8.730 S Feb 19 2025 MiTek Industries, Inc. Fri Jun 13 10:53:36 Page: 1
ID:f3RS_KE6O2nxMgAUnlFT3RyiMNS-RfC?PsB70Hq3NSgPqnL8w3uITXbGKWrCDoi7J4zJC?f

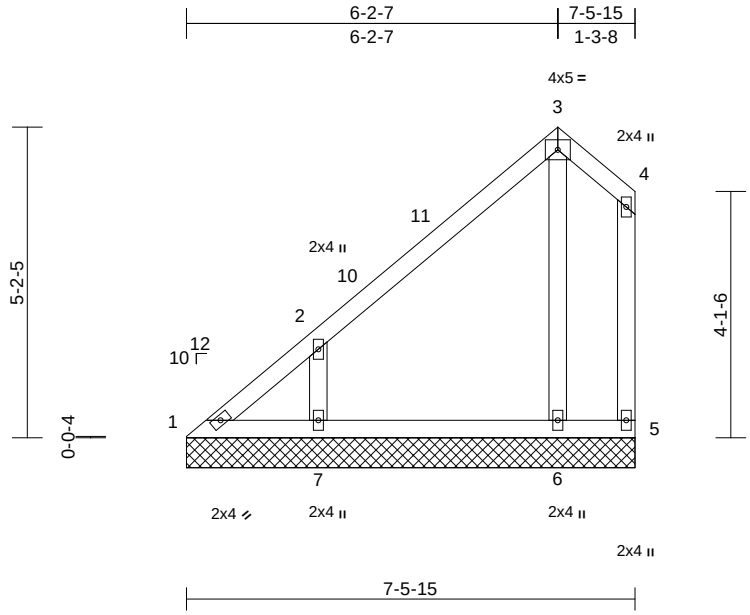

Scale = 1:38.5

Loading	(psf)	Spacing	2-0-0	CSI		DEFL	in	(loc)	l/defl	L/d	PLATES	GRIP
TCLL (roof)	20.0	Plate Grip DOL	1.15	TC	0.25	Vert(LL)	n/a	-	n/a	999	MT20	244/190
Snow (Pf)	20.0	Lumber DOL	1.15	BC	0.09	Vert(TL)	n/a	-	n/a	999		
TCDL	10.0	Rep Stress Incr	YES	WB	0.10	Horiz(TL)	0.00	5	n/a	n/a		
BCLL	0.0*	Code	IRC2018/TPI2014	Matrix-MP								
BCDL	10.0										Weight: 39 lb	FT = 20%

LUMBER

TOP CHORD 2x4 SP No.2
BOT CHORD 2x4 SP No.2
WEBS 2x4 SP No.3
OTHERS 2x4 SP No.3

BRACING

TOP CHORD Structural wood sheathing directly applied or 6-0-0 oc purlins, except end verticals.
BOT CHORD Rigid ceiling directly applied or 10-0-0 oc bracing.

REACTIONS (size) 1=7-5-15, 5=7-5-15, 6=7-5-15, 7=7-5-15
Max Horiz 1=164 (LC 14)
Max Uplift 1=-28 (LC 12), 5=-33 (LC 15), 6=-23 (LC 14), 7=-148 (LC 14)
Max Grav 1=112 (LC 14), 5=51 (LC 21), 6=220 (LC 20), 7=343 (LC 24)

FORCES (lb) - Maximum Compression/Maximum Tension
TOP CHORD 1-2=-276/171, 2-3=-102/66, 3-4=-31/35, 4-5=-61/42
BOT CHORD 1-7=-26/31, 6-7=0/0, 5-6=0/0
WEBS 3-6=-155/95, 2-7=-369/330

NOTES

1) Unbalanced roof live loads have been considered for this design.
2) Wind: ASCE 7-16; Vult=130mph (3-second gust) Vasd=103mph; TCDL=6.0psf; BCDL=6.0psf; h=25ft; Cat. II; Exp B; Enclosed; MWFRS (envelope) exterior zone and C-C Exterior(2E) 0-0-5 to 3-0-5, Exterior(2R) 3-0-5 to 6-2-12, Exterior(2E) 6-2-12 to 7-4-8 zone;C-C for members and forces & MWFRS for reactions shown; Lumber DOL=1.60 plate grip DOL=1.60
3) Truss designed for wind loads in the plane of the truss only. For studs exposed to wind (normal to the face), see Standard Industry Gable End Details as applicable, or consult qualified building designer as per ANSI/TPI 1.
4) TCLL: ASCE 7-16; Pr=20.0 psf (roof LL: Lum DOL=1.15 Plate DOL=1.15); Pf=20.0 psf (Lum DOL=1.15 Plate DOL=1.15); Is=1.0; Rough Cat B; Fully Exp.; Ce=0.9; Cs=1.00; Ct=1.10
5) Unbalanced snow loads have been considered for this design.
6) Gable requires continuous bottom chord bearing.
7) Gable studs spaced at 4-0-0 oc.
8) This truss has been designed for a 10.0 psf bottom chord live load nonconcurrent with any other live loads.
9) * This truss has been designed for a live load of 20.0psf on the bottom chord in all areas where a rectangle 3-06-00 tall by 2-00-00 wide will fit between the bottom chord and any other members.
10) Provide mechanical connection (by others) of truss to bearing plate capable of withstanding 33 lb uplift at joint 5, 28 lb uplift at joint 1, 23 lb uplift at joint 6 and 148 lb uplift at joint 7.
11) This truss is designed in accordance with the 2018 International Residential Code sections R502.11.1 and R802.10.2 and referenced standard ANSI/TPI 1.

LOAD CASE(S) Standard

June 16,2025

WARNING - Verify design parameters and READ NOTES ON THIS AND INCLUDED MITEK REFERENCE PAGE MII-7473 rev. 1/2/2023 BEFORE USE.
Design valid for use only with MiTek® connectors. This design is based only upon parameters shown, and is for an individual building component, not a truss system. Before use, the building designer must verify the applicability of design parameters and properly incorporate this design into the overall building design. Bracing indicated is to prevent buckling of individual truss web and/or chord members only. Additional temporary and permanent bracing is always required for stability and to prevent collapse with possible personal injury and property damage. For general guidance regarding the fabrication, storage, delivery, erection and bracing of trusses and truss systems, see **ANSI/TPI1 Quality Criteria and DSB-22** available from Truss Plate Institute (www.tpinst.org) and **BCSI Building Component Safety Information** available from the Structural Building Component Association (www.sbcacomponents.com)

ENGINEERING BY TRENCO A MiTek Affiliate
818 Soundside Road
Edenton, NC 27932

Job	Truss	Truss Type	Qty	Ply	926 Serenity-Roof-329 A CP GLH
25060033-01	VLG3	Valley	1	1	I74200620 Job Reference (optional)

Carter Components (Sanford, NC), Sanford, NC - 27332,

Run: 8.73 S Feb 19 2025 Print: 8.730 S Feb 19 2025 MiTek Industries, Inc. Fri Jun 13 10:53:36 Page: 1
ID:8XWFmUSO9a2NXRYyqXZioEyiMNA-RfC?PsB70Hq3NSgPqnL8w3uITXbGKWrCDoi7J4zJC?f

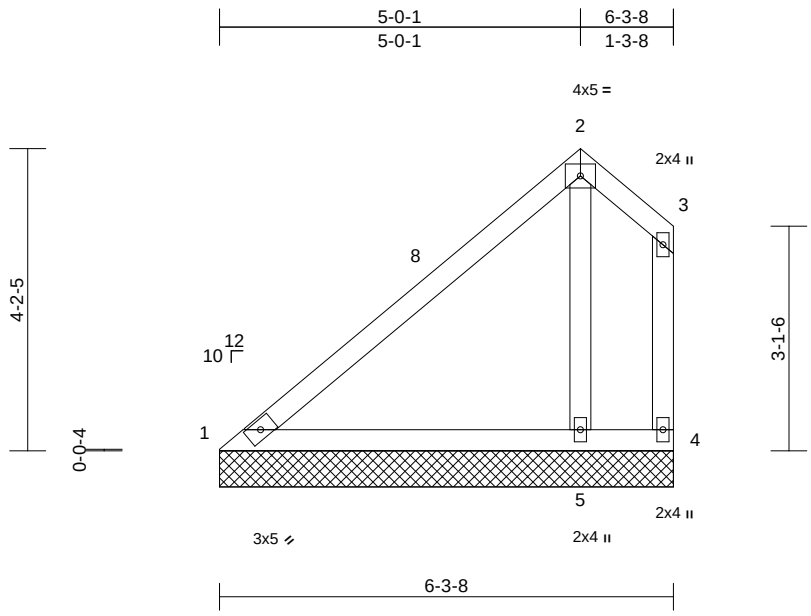

Scale = 1:31.9

Loading	(psf)	Spacing	2-0-0	CSI		DEFL	in	(loc)	l/defl	L/d	PLATES	GRIP
TCLL (roof)	20.0	Plate Grip DOL	1.15	TC	0.37	Vert(LL)	n/a	-	n/a	999	MT20	244/190
Snow (Pf)	20.0	Lumber DOL	1.15	BC	0.41	Vert(TL)	n/a	-	n/a	999		
TCDL	10.0	Rep Stress Incr	YES	WB	0.06	Horiz(TL)	0.01	4	n/a	n/a		
BCLL	0.0*	Code	IRC2018/TPI2014	Matrix-MP								
BCDL	10.0										Weight: 30 lb	FT = 20%

LUMBER

TOP CHORD	2x4 SP No.2
BOT CHORD	2x4 SP No.2
WEBS	2x4 SP No.3
OTHERS	2x4 SP No.3

BRACING

TOP CHORD	Structural wood sheathing directly applied or 6-0-0 oc purlins, except end verticals.
BOT CHORD	Rigid ceiling directly applied or 10-0-0 oc bracing.

REACTIONS (size) 1=6-3-8, 4=6-3-8, 5=6-3-8
Max Horiz 1=127 (LC 14)
Max Uplift 4=-72 (LC 35), 5=-92 (LC 14)
Max Grav 1=186 (LC 20), 4=16 (LC 14), 5=390 (LC 20)

FORCES (lb) - Maximum Compression/Maximum Tension

TOP CHORD	1-2=-215/81, 2-3=-31/37, 3-4=-61/46
BOT CHORD	1-5=-151/222, 4-5=0/0
WEBS	2-5=-189/122

NOTES

1) Unbalanced roof live loads have been considered for this design.
2) Wind: ASCE 7-16; Vult=130mph (3-second gust) Vasd=103mph; TCDL=6.0psf; BCDL=6.0psf; h=25ft; Cat. II; Exp B; Enclosed; MWFRS (envelope) exterior zone and C-C Exterior(2E) 0-0-5 to 3-0-5, Exterior(2R) 3-0-5 to 5-0-5, Exterior(2E) 5-0-5 to 6-2-1 zone;C-C for members and forces & MWFRS for reactions shown; Lumber DOL=1.60 plate grip DOL=1.60
3) Truss designed for wind loads in the plane of the truss only. For studs exposed to wind (normal to the face), see Standard Industry Gable End Details as applicable, or consult qualified building designer as per ANSI/TPI 1.
4) TCLL: ASCE 7-16; Pr=20.0 psf (roof LL: Lum DOL=1.15 Plate DOL=1.15); Pf=20.0 psf (Lum DOL=1.15 Plate DOL=1.15); Is=1.0; Rough Cat B; Fully Exp.; Ce=0.9; Cs=1.00; Ct=1.10
5) Unbalanced snow loads have been considered for this design.
6) Gable requires continuous bottom chord bearing.
7) Gable studs spaced at 4-0-0 oc.
8) This truss has been designed for a 10.0 psf bottom chord live load nonconcurrent with any other live loads.
9) * This truss has been designed for a live load of 20.0psf on the bottom chord in all areas where a rectangle 3-06-00 tall by 2-00-00 wide will fit between the bottom chord and any other members.
10) Provide mechanical connection (by others) of truss to bearing plate capable of withstanding 72 lb uplift at joint 4 and 92 lb uplift at joint 5.
11) This truss is designed in accordance with the 2018 International Residential Code sections R502.11.1 and R802.10.2 and referenced standard ANSI/TPI 1.

LOAD CASE(S) Standard

June 16,2025

WARNING - Verify design parameters and READ NOTES ON THIS AND INCLUDED MITEK REFERENCE PAGE MII-7473 rev. 1/2/2023 BEFORE USE.
Design valid for use only with MiTek® connectors. This design is based only upon parameters shown, and is for an individual building component, not a truss system. Before use, the building designer must verify the applicability of design parameters and properly incorporate this design into the overall building design. Bracing indicated is to prevent buckling of individual truss web and/or chord members only. Additional temporary and permanent bracing is always required for stability and to prevent collapse with possible personal injury and property damage. For general guidance regarding the fabrication, storage, delivery, erection and bracing of trusses and truss systems, see **ANSI/TPI1 Quality Criteria and DSB-22** available from Truss Plate Institute (www.tpinst.org) and **BCSI Building Component Safety Information** available from the Structural Building Component Association (www.sbcacomponents.com)

ENGINEERING BY TRENCO A MiTek Affiliate
818 Soundside Road
Edenton, NC 27932

Job	Truss	Truss Type	Qty	Ply	926 Serenity-Roof-329 A CP GLH
25060033-01	VLG4	Valley	1	1	I74200621 Job Reference (optional)

Carter Components (Sanford, NC), Sanford, NC - 27332,

Run: 8.73 S Feb 19 2025 Print: 8.730 S Feb 19 2025 MiTek Industries, Inc. Fri Jun 13 10:53:36 Page: 1
ID:n6mDrPobKViGVuGX17aVTMyiMMj-RfC?PsB70Hq3NSgPqnL8w3uITXbGKWrCDoi7J4zJC?f

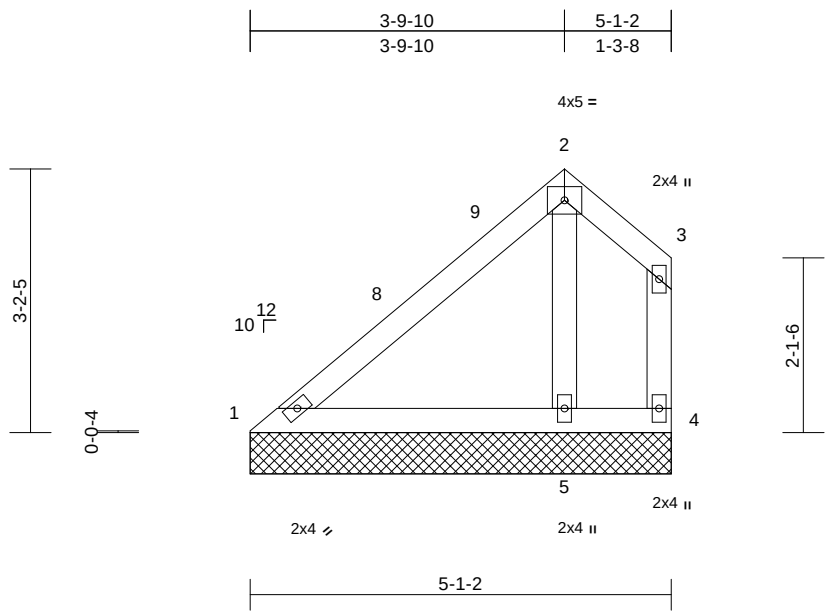

Scale = 1:27.9

Loading	(psf)	Spacing	2-0-0	CSI		DEFL	in	(loc)	l/defl	L/d	PLATES	GRIP
TCLL (roof)	20.0	Plate Grip DOL	1.15	TC	0.21	Vert(LL)	n/a	-	n/a	999	MT20	244/190
Snow (Pf)	20.0	Lumber DOL	1.15	BC	0.25	Vert(TL)	n/a	-	n/a	999		
TCDL	10.0	Rep Stress Incr	YES	WB	0.03	Horiz(TL)	0.00	4	n/a	n/a		
BCLL	0.0*	Code	IRC2018/TPI2014	Matrix-MP								
BCDL	10.0										Weight: 23 lb	FT = 20%

LUMBER

TOP CHORD	2x4 SP No.2
BOT CHORD	2x4 SP No.2
WEBS	2x4 SP No.3
OTHERS	2x4 SP No.3

BRACING

TOP CHORD	Structural wood sheathing directly applied or 5-1-2 oc purlins, except end verticals.
BOT CHORD	Rigid ceiling directly applied or 10-0-0 oc bracing.

REACTIONS (size) 1=5-1-2, 4=5-1-2, 5=5-1-2
Max Horiz 1=90 (LC 14)
Max Uplift 4=-31 (LC 35), 5=-59 (LC 14)
Max Grav 1=146 (LC 20), 4=31 (LC 21), 5=292 (LC 20)

FORCES (lb) - Maximum Compression/Maximum Tension

TOP CHORD	1-2=-168/63, 2-3=-29/39, 3-4=-57/49
BOT CHORD	1-5=-118/166, 4-5=0/0
WEBS	2-5=-146/81

NOTES

1) Unbalanced roof live loads have been considered for this design.
2) Wind: ASCE 7-16; Vult=130mph (3-second gust) Vasd=103mph; TCDL=6.0psf; BCDL=6.0psf; h=25ft; Cat. II; Exp B; Enclosed; MWFRS (envelope) exterior zone and C-C Exterior(2E) 0-0-5 to 3-0-5, Exterior(2R) 3-0-5 to 3-9-15, Exterior(2E) 3-9-15 to 4-11-11 zone;C-C for members and forces & MWFRS for reactions shown; Lumber DOL=1.60 plate grip DOL=1.60
3) Truss designed for wind loads in the plane of the truss only. For studs exposed to wind (normal to the face), see Standard Industry Gable End Details as applicable, or consult qualified building designer as per ANSI/TPI 1.
4) TCLL: ASCE 7-16; Pr=20.0 psf (roof LL: Lum DOL=1.15 Plate DOL=1.15); Pf=20.0 psf (Lum DOL=1.15 Plate DOL=1.15); Is=1.0; Rough Cat B; Fully Exp.; Ce=0.9; Cs=1.00; Ct=1.10
5) Unbalanced snow loads have been considered for this design.
6) Gable requires continuous bottom chord bearing.
7) Gable studs spaced at 4-0-0 oc.
8) This truss has been designed for a 10.0 psf bottom chord live load nonconcurrent with any other live loads.
9) * This truss has been designed for a live load of 20.0psf on the bottom chord in all areas where a rectangle 3-06-00 tall by 2-00-00 wide will fit between the bottom chord and any other members.
10) Provide mechanical connection (by others) of truss to bearing plate capable of withstanding 31 lb uplift at joint 4 and 59 lb uplift at joint 5.
11) This truss is designed in accordance with the 2018 International Residential Code sections R502.11.1 and R802.10.2 and referenced standard ANSI/TPI 1.

LOAD CASE(S) Standard

June 16,2025

WARNING - Verify design parameters and READ NOTES ON THIS AND INCLUDED MITEK REFERENCE PAGE MII-7473 rev. 1/2/2023 BEFORE USE.
Design valid for use only with MiTek® connectors. This design is based only upon parameters shown, and is for an individual building component, not a truss system. Before use, the building designer must verify the applicability of design parameters and properly incorporate this design into the overall building design. Bracing indicated is to prevent buckling of individual truss web and/or chord members only. Additional temporary and permanent bracing is always required for stability and to prevent collapse with possible personal injury and property damage. For general guidance regarding the fabrication, storage, delivery, erection and bracing of trusses and truss systems, see **ANSI/TPI1 Quality Criteria and DSB-22** available from Truss Plate Institute (www.tpinst.org) and **BCSI Building Component Safety Information** available from the Structural Building Component Association (www.sbcacomponents.com)

ENGINEERING BY TRENCO A MiTek Affiliate
818 Soundside Road
Edenton, NC 27932

Job	Truss	Truss Type	Qty	Ply	926 Serenity-Roof-329 A CP GLH
25060033-01	VLG5	Valley	1	1	I74200622 Job Reference (optional)

Carter Components (Sanford, NC), Sanford, NC - 27332,

Run: 8.73 S Feb 19 2025 Print: 8.730 S Feb 19 2025 MiTek Industries, Inc. Fri Jun 13 10:53:36 Page: 1
ID:NocWnBzN1oTHB2KDr3rn1JyiMMV-RfC?PsB70Hq3NSgPqnL8w3uITXbGKWrCDoi7J4zJC?f

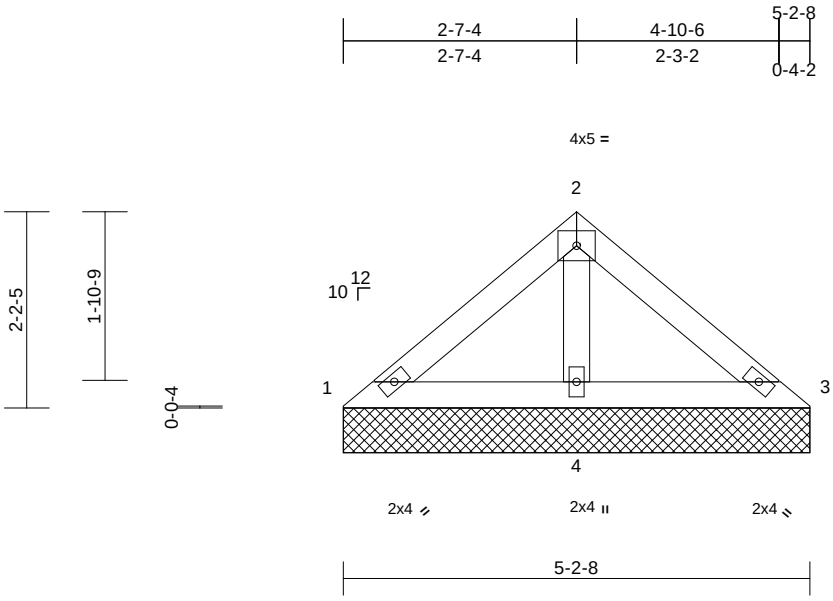

Scale = 1:25.7

Loading	(psf)	Spacing	2-0-0	CSI		DEFL	in	(loc)	l/defl	L/d	PLATES	GRIP
TCLL (roof)	20.0	Plate Grip DOL	1.15	TC	0.11	Vert(LL)	n/a	-	n/a	999	MT20	244/190
Snow (Pf)	20.0	Lumber DOL	1.15	BC	0.13	Vert(TL)	n/a	-	n/a	999		
TCDL	10.0	Rep Stress Incr	YES	WB	0.04	Horiz(TL)	0.00	4	n/a	n/a		
BCLL	0.0*	Code	IRC2018/TPI2014	Matrix-MP								
BCDL	10.0										Weight: 19 lb	FT = 20%

LUMBER
TOP CHORD 2x4 SP No.2
BOT CHORD 2x4 SP No.2
OTHERS 2x4 SP No.3

BRACING
TOP CHORD Structural wood sheathing directly applied or 5-2-8 oc purlins.
BOT CHORD Rigid ceiling directly applied or 6-0-0 oc bracing.

REACTIONS (size) 1=5-2-8, 3=5-2-8, 4=5-2-8
Max Horiz 1=47 (LC 13)
Max Uplift 3=-6 (LC 15), 4=-38 (LC 14)
Max Grav 1=92 (LC 20), 3=92 (LC 21), 4=326 (LC 20)

FORCES (lb) - Maximum Compression/Maximum Tension
TOP CHORD 1-2=-84/119, 2-3=-84/119
BOT CHORD 1-4=-96/98, 3-4=-96/98
WEBS 2-4=-238/112

NOTES
1) Unbalanced roof live loads have been considered for this design.
2) Wind: ASCE 7-16; Vult=130mph (3-second gust) Vasd=103mph; TCDL=6.0psf; BCDL=6.0psf; h=25ft; Cat. II; Exp B; Enclosed; MWFRS (envelope) exterior zone and C-C Exterior(2E) zone; cantilever left and right exposed ; end vertical left and right exposed;C-C for members and forces & MWFRS for reactions shown; Lumber DOL=1.60 plate grip DOL=1.60
3) Truss designed for wind loads in the plane of the truss only. For studs exposed to wind (normal to the face), see Standard Industry Gable End Details as applicable, or consult qualified building designer as per ANSI/TPI 1.
4) TCLL: ASCE 7-16; Pr=20.0 psf (roof LL: Lum DOL=1.15 Plate DOL=1.15); Pf=20.0 psf (Lum DOL=1.15 Plate DOL=1.15); Is=1.0; Rough Cat B; Fully Exp.; Ce=0.9; Cs=1.00; Ct=1.10
5) Unbalanced snow loads have been considered for this design.
6) Gable requires continuous bottom chord bearing.
7) Gable studs spaced at 4-0-0 oc.
8) This truss has been designed for a 10.0 psf bottom chord live load nonconcurrent with any other live loads.
9) * This truss has been designed for a live load of 20.0psf on the bottom chord in all areas where a rectangle 3-06-00 tall by 2-00-00 wide will fit between the bottom chord and any other members.
10) Provide mechanical connection (by others) of truss to bearing plate capable of withstanding 6 lb uplift at joint 3 and 38 lb uplift at joint 4.
11) This truss is designed in accordance with the 2018 International Residential Code sections R502.11.1 and R802.10.2 and referenced standard ANSI/TPI 1.

LOAD CASE(S) Standard

June 16,2025

WARNING - Verify design parameters and READ NOTES ON THIS AND INCLUDED MITEK REFERENCE PAGE MII-7473 rev. 1/2/2023 BEFORE USE.
Design valid for use only with MiTek® connectors. This design is based only upon parameters shown, and is for an individual building component, not a truss system. Before use, the building designer must verify the applicability of design parameters and properly incorporate this design into the overall building design. Bracing indicated is to prevent buckling of individual truss web and/or chord members only. Additional temporary and permanent bracing is always required for stability and to prevent collapse with possible personal injury and property damage. For general guidance regarding the fabrication, storage, delivery, erection and bracing of trusses and truss systems, see **ANSI/TPI1 Quality Criteria and DSB-22** available from Truss Plate Institute (www.tpinst.org) and **BCSI Building Component Safety Information** available from the Structural Building Component Association (www.sbcacomponents.com)

ENGINEERING BY TRENCO A MiTek Affiliate
818 Soundside Road
Edenton, NC 27932

Job	Truss	Truss Type	Qty	Ply	926 Serenity-Roof-329 A CP GLH
25060033-01	VLG6	Valley	1	1	I74200623 Job Reference (optional)

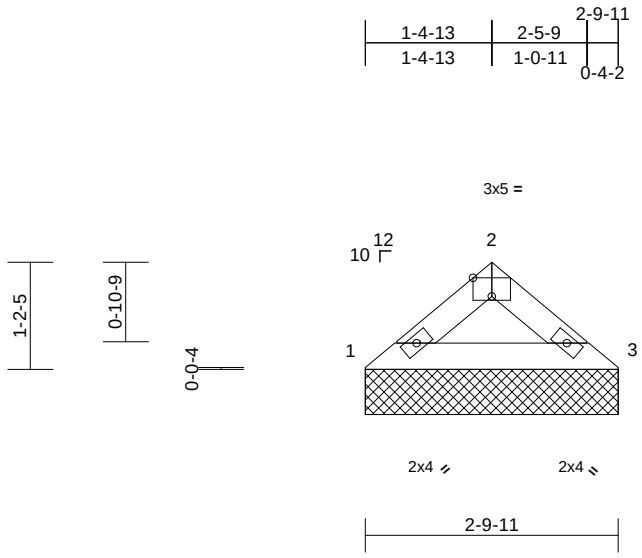

Scale = 1:25.6

Plate Offsets (X, Y): [2:0-2-8,Edge]

Loading	(psf)	Spacing	2-0-0	CSI		DEFL	in	(loc)	l/defl	L/d	PLATES	GRIP
TCLL (roof)	20.0	Plate Grip DOL	1.15	TC	0.06	Vert(LL)	n/a	-	n/a	999	MT20	244/190
Snow (Pf)	20.0	Lumber DOL	1.15	BC	0.06	Vert(TL)	n/a	-	n/a	999		
TCDL	10.0	Rep Stress Incr	YES	WB	0.00	Horiz(TL)	0.00	3	n/a	n/a		
BCLL	0.0*	Code	IRC2018/TPI2014	Matrix-MP								
BCDL	10.0										Weight: 8 lb	FT = 20%

LUMBER
TOP CHORD 2x4 SP No.2
BOT CHORD 2x4 SP No.2

BRACING
TOP CHORD Structural wood sheathing directly applied or 2-9-11 oc purlins.
BOT CHORD Rigid ceiling directly applied or 10-0-0 oc bracing.

REACTIONS (size) 1=2-9-11, 3=2-9-11
Max Horiz 1=23 (LC 13)
Max Uplift 1=-9 (LC 14), 3=-9 (LC 15)
Max Grav 1=128 (LC 20), 3=128 (LC 21)

FORCES (lb) - Maximum Compression/Maximum Tension
TOP CHORD 1-2=-164/68, 2-3=-164/68
BOT CHORD 1-3=-38/117

NOTES
1) Unbalanced roof live loads have been considered for this design.
2) Wind: ASCE 7-16; Vult=130mph (3-second gust) Vasd=103mph; TCDL=6.0psf; BCDL=6.0psf; h=25ft; Cat. II; Exp B; Enclosed; MWFRS (envelope) exterior zone and C-C Exterior(2E) zone; cantilever left and right exposed ; end vertical left and right exposed;C-C for members and forces & MWFRS for reactions shown; Lumber DOL=1.60 plate grip DOL=1.60
3) Truss designed for wind loads in the plane of the truss only. For studs exposed to wind (normal to the face), see Standard Industry Gable End Details as applicable, or consult qualified building designer as per ANSI/TPI 1.
4) TCLL: ASCE 7-16; Pr=20.0 psf (roof LL: Lum DOL=1.15 Plate DOL=1.15); Pf=20.0 psf (Lum DOL=1.15 Plate DOL=1.15); Is=1.0; Rough Cat B; Fully Exp.; Ce=0.9; Cs=1.00; Ct=1.10
5) Unbalanced snow loads have been considered for this design.
6) Gable requires continuous bottom chord bearing.
7) Gable studs spaced at 4-0-0 oc.
8) This truss has been designed for a 10.0 psf bottom chord live load nonconcurrent with any other live loads.
9) * This truss has been designed for a live load of 20.0psf on the bottom chord in all areas where a rectangle 3-06-00 tall by 2-00-00 wide will fit between the bottom chord and any other members.
10) Provide mechanical connection (by others) of truss to bearing plate capable of withstanding 9 lb uplift at joint 1 and 9 lb uplift at joint 3.
11) This truss is designed in accordance with the 2018 International Residential Code sections R502.11.1 and R802.10.2 and referenced standard ANSI/TPI 1.

LOAD CASE(S) Standard

June 16,2025

WARNING - Verify design parameters and READ NOTES ON THIS AND INCLUDED MITEK REFERENCE PAGE MII-7473 rev. 1/2/2023 BEFORE USE.
Design valid for use only with MiTek® connectors. This design is based only upon parameters shown, and is for an individual building component, not a truss system. Before use, the building designer must verify the applicability of design parameters and properly incorporate this design into the overall building design. Bracing indicated is to prevent buckling of individual truss web and/or chord members only. Additional temporary and permanent bracing is always required for stability and to prevent collapse with possible personal injury and property damage. For general guidance regarding the fabrication, storage, delivery, erection and bracing of trusses and truss systems, see **ANSI/TPI1 Quality Criteria and DSB-22** available from Truss Plate Institute (www.tpinst.org) and **BCSI Building Component Safety Information** available from the Structural Building Component Association (www.sbcacomponents.com)

ENGINEERING BY TRENCO A MiTek Affiliate
818 Soundside Road
Edenton, NC 27932

Symbols

PLATE LOCATION AND ORIENTATION

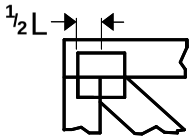

Center plate on joint unless x, y offsets are indicated. Dimensions are in ft-in-sixteenths. Apply plates to both sides of truss and fully embed teeth.

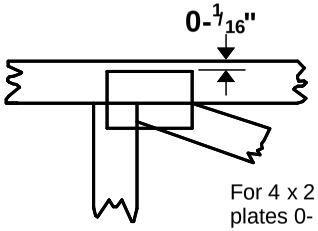

For 4 x 2 orientation, locate plates 0- 1/16" from outside edge of truss.

This symbol indicates the required direction of slots in connector plates.

* Plate location details available in MiTek software or upon request.

PLATE SIZE

4 x 4

The first dimension is the plate width measured perpendicular to slots. Second dimension is the length parallel to slots.

LATERAL BRACING LOCATION

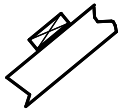

Indicated by symbol shown and/or by text in the bracing section of the output. Use T or I bracing if indicated.

BEARING

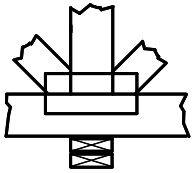

Indicates location where bearings (supports) occur. Icons vary but reaction section indicates joint number/letter where bearings occur. Min size shown is for crushing only.

Industry Standards:

ANSI/TPI1: National Design Specification for Metal Plate Connected Wood Truss Construction.
DSB-22: Design Standard for Bracing.
BCSI: Building Component Safety Information, Guide to Good Practice for Handling, Installing, Restraining & Bracing of Metal Plate Connected Wood Trusses.

Numbering System

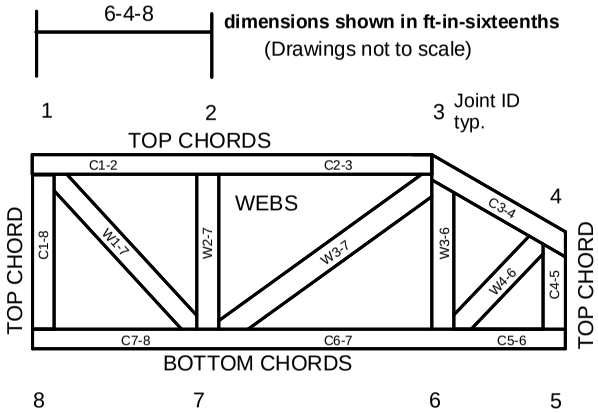

JOINTS ARE GENERALLY NUMBERED/LETTERED CLOCKWISE AROUND THE TRUSS STARTING AT THE JOINT FARTHEST TO THE LEFT.

CHORDS AND WEBS ARE IDENTIFIED BY END JOINT NUMBERS/LETTERS.

Product Code Approvals

ICC-ES Reports:

ESR-1988, ESR-2362, ESR-2685, ESR-3282
ESR-4722, ESL-1388

Design General Notes

Trusses are designed for wind loads in the plane of the truss unless otherwise shown.

Lumber design values are in accordance with ANSI/TPI 1 section 6.3 These truss designs rely on lumber values established by others.

© 2023 MiTek® All Rights Reserved

MiTek®

ENGINEERING BY TRENCO
A MiTek Affiliate

General Safety Notes

Failure to Follow Could Cause Property Damage or Personal Injury

1. Additional stability bracing for truss system, e.g. diagonal or X-bracing, is always required. See BCSI.
2. Truss bracing must be designed by an engineer. For wide truss spacing, individual lateral braces themselves may require bracing, or alternative Tor I bracing should be considered.
3. Never exceed the design loading shown and never stack materials on inadequately braced trusses.
4. Provide copies of this truss design to the building designer, erection supervisor, property owner and all other interested parties.
5. Cut members to bear tightly against each other.
6. Place plates on each face of truss at each joint and embed fully. Knots and wane at joint locations are regulated by ANSI/TPI 1.
7. Design assumes trusses will be suitably protected from the environment in accord with ANSI/TPI 1.
8. Unless otherwise noted, moisture content of lumber shall not exceed 19% at time of fabrication.
9. Unless expressly noted, this design is not applicable for use with fire retardant, preservative treated, or green lumber.
10. Camber is a non-structural consideration and is the responsibility of truss fabricator. General practice is to camber for dead load deflection.
11. Plate type, size, orientation and location dimensions indicated are minimum plating requirements.
12. Lumber used shall be of the species and size, and in all respects, equal to or better than that specified.
13. Top chords must be sheathed or purlins provided at spacing indicated on design.
14. Bottom chords require lateral bracing at 10 ft. spacing, or less, if no ceiling is installed, unless otherwise noted.
15. Connections not shown are the responsibility of others.
16. Do not cut or alter truss member or plate without prior approval of an engineer.
17. Install and load vertically unless indicated otherwise.
18. Use of green or treated lumber may pose unacceptable environmental, health or performance risks. Consult with project engineer before use.
19. Review all portions of this design (front, back, words and pictures) before use. Reviewing pictures alone is not sufficient.
20. Design assumes manufacture in accordance with ANSI/TPI 1 Quality Criteria.
21. The design does not take into account any dynamic or other loads other than those expressly stated.