Residence for

Adams Homes AEC, LLC
Plan 1727 "B" FE (R) KC006

GENERAL NOTES

1. ALL WORK IS TO BE DONE IN STRICT ACCORDANCE WITH NORTH CAROLINA STATE RESIDENTIAL BUILDING CODE, 2018 EDITION (HEREWITH SHOWN AS N.C.S.R.B.C.).
2. DIMENSIONS SHOWN ON DRAWINGS GOVERN OVER SCALE.
3. STUD WALL DESIGN SHALL CONFORM TO ALL N.C.S.R.B.C. REQUIREMENTS.
4. CONTRACTOR SHALL USE TEMPERED SAFETY GLASS IN ALL LOCATIONS AS REQUIRED BY N.C.S.R.B.C., 2018 EDITION, SECTION R308.4
5. ANY HABITABLE ROOM SHALL MEET ALL LIGHT/VENTILATION AND EGRESS AS REQUIRED BY N.C.S.R.B.C., 2018 EDITION, SECTIONS R-303.1 AND R-310.1
6. ALL WALLS SHOWN ON FLOOR PLANS ARE 2x4 FRAME UNLESS NOTED OTHERWISE.
7. ALL ANGLED WALLS SHOWN ON FLOOR PLANS ARE 45° UNLESS NOTED OTHERWISE.
8. ALL WINDOWS SHALL HAVE A MINIMUM DPI RATING OF 25. BUILDER SHALL VERIFY WITH WINDOW MANUFACTURER THAT UNITS INSTALLED MEET THESE REQUIREMENTS AS PER N.C.S.R.B.C., 2018 EDITION, TABLE 301.2(6).
9. ENERGY EFFICIENCY REQUIREMENTS FOR THE SPECIFIC CLIMATE ZONE WHERE STRUCTURE IS BEING BUILT SHALL BE IN ACCORDANCE WITH CHAPTER 11 OF THE NORTH CAROLINA RESIDENTIAL BUILDING CODE, 2018 EDITION, AS SHOWN IN TABLES N1101.2 AND N1102.1.
10. TERMITE TREATMENT - BORATE APPLIED TO ALL FRAME MEMBERS WITHIN 24" AFF.

INDEX TO DRAWINGS

	COVER SHEET
1	FRONT AND LEFT SIDE ELEVATIONS
2	REAR AND RIGHT SIDE ELEVATIONS
3	FLOOR PLAN
4	FLOOR ELECTRICAL PLAN
opt1	PLAN OPTIONS
D1	CONSTRUCTION DETAILS
S1	MONO SLAB FOUNDATION PLAN
S2	CEILING FRAMING PLAN
S3	ROOF FRAMING PLAN
SD1	STRUCTURAL DETAILS
SPEC	STRUCTURAL SPECIFICATIONS
S6	PLAN OPTIONS

RESIDENTIAL BUILDING CODE SUMMARY

1. PLANS ARE DESIGNED TO THE 2018 NORTH CAROLINA RESIDENTIAL BUILDING CODE.
2. HOUSE IS DESIGNED FOR 120 MPH, 3 SECOND GUST (93 MPH FASTEST WIND), EXPOSURE B.
3. ANCHOR BOLTS SHALL BE MIN. 1/2" DIAMETER WITH STANDARD WASHER AND NUT AND SHALL EXTEND 7" MIN. INTO MASONRY OR CONCRETE. BOLTS TO BE NO MORE THAN 6' O.C. AND WITHIN 12" OF CORNERS. ALTERNATE ANCHOR STRAPS CAN BE USED INSTEAD OF ANCHOR BOLTS SPACED AT THE EQUIVALENT SPACING AND INSTALLED PER MANUFACTURER'S SPECIFICATION'S EXCEPT AT GARAGE LUG FTG.
4. MEAN ROOF HEIGHT: 15'-4"
5. COMPONENT & CLADDING DESIGNED FOR THE FOLLOWING LOADS:

MEAN ROOF HGT:	UP TO 30'	30'-1"TO 35'	35'-1"TO 40'	40'-1"TO 45'
ZONE 1	16.5, -18.0	17.3, -18.9	18.0, -19.6	18.5, -20.2
ZONE 2	16.5, -21.0	17.3, -22.1	18.0, -22.9	18.5, -23.5
ZONE 3	16.5, -21.0	17.3, -22.1	18.0, -22.9	18.5, -23.5
ZONE 4	18.0, -19.5	18.9, -20.5	19.6, -21.3	20.2, -21.8
ZONE 5	18.0, -24.1	18.9, -25.3	19.6, -26.3	20.2, -27.0

6. MINIMUM VALUES FOR ENERGY COMPLIANCE: ZONE 4
7. MAXIMUM GLAZING U-FACTOR: 0.35
8. INSULATING VALUES: CEILING: R-30* / WALLS: R-15 / FLOOR: R-19 / SLABS: R-10. CODE REFERENCE: TABLE N1102.1 (*R-30 ONLY IF UNCOMPRESSED, R-38 REQUIRED IF COMPRESSED)
9. FLASHING SHALL BE INSTALLED IN ACCORDANCE WITH SECTION R703.8 OF THE N.C.R.B.C.
10. FIREBLOCKING SHALL BE INSTALLED IN ACCORDANCE WITH SECTION R602.8 OF THE N.C.R.B.C.
11. DRAFTSTOPPING SHALL BE INSTALLED IN ACCORDANCE WITH SECTION R302.12 OF THE N.C.R.B.C.

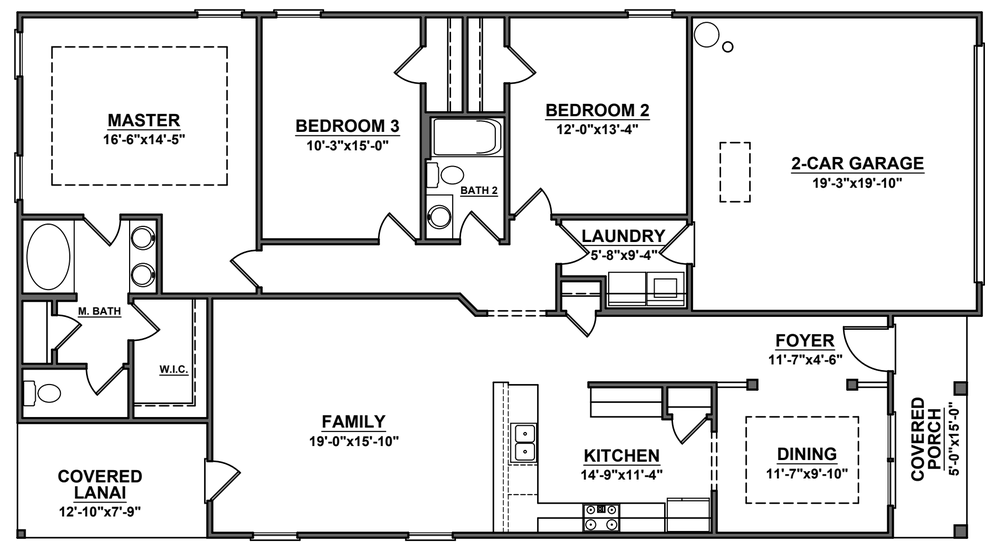

MATERIALS LEGEND

EARTH/COMPACT FILL	FINISH WOOD
CONCRETE	ROUGH WOOD
BRICK	BLOCKING
CONCRETE BLOCK/STONE	PLYWOOD
STEEL	BATT INSULATION
ALUMINUM	RIGID INSULATION

AREA CALCULATIONS

1ST FLOOR:	1727	GARAGE:	397
2ND FLOOR:	N/A	FRONT PORCH:	75
TOTAL:	1727	COV. LANAI:	99
		TOTAL:	571

WIDTH: 35'-6"
DEPTH: 65'-2"

TOILET ACCESSORIES LEGEND

PROVIDE 2x4 BLOCKING IN THE WALL FOR THE FOLLOWING:

TB	TOWEL BAR
TP	TOILET PAPER HOLDER
TR	TOWEL RING
MC	MEDICINE CABINET
MR	MAGAZINE RACK

FOUNDATION VENTING CALCULATIONS

NOT NEEDED WITH SLAB FOUNDATION

THE PURPOSE OF THESE DRAWINGS IS TO SHOW THE INTENT OF THE DESIGN AND CONSTRUCTION OF THIS HOME. ANY ERRORS AND/OR OMISSIONS FOUND IN THIS SET SHOULD IMMEDIATELY BE REPORTED TO ADAMS HOMES FOR CLARIFICATION OR CORRECTION. THE CONTRACTOR SHOULD VERIFY ALL CONDITIONS AND DIMENSIONS PRIOR TO CONSTRUCTION.

ATTIC VENTILATION REQUIREMENTS

NATURAL ROOF VENTILATION	MECHANICAL ROOF VENTILATOR
2298 SQ. FT. / 150 = 15.32 SQ. FT. VENT REQ'D	2298 SQ. FT. / 300 = 7.66 SQ. FT. VENT REQ'D

BUILDER TO PROVIDE APPROPRIATE VENTILATING AS REQUIRED PER CODE

7589

ADAMS HOMES AEC, LLC

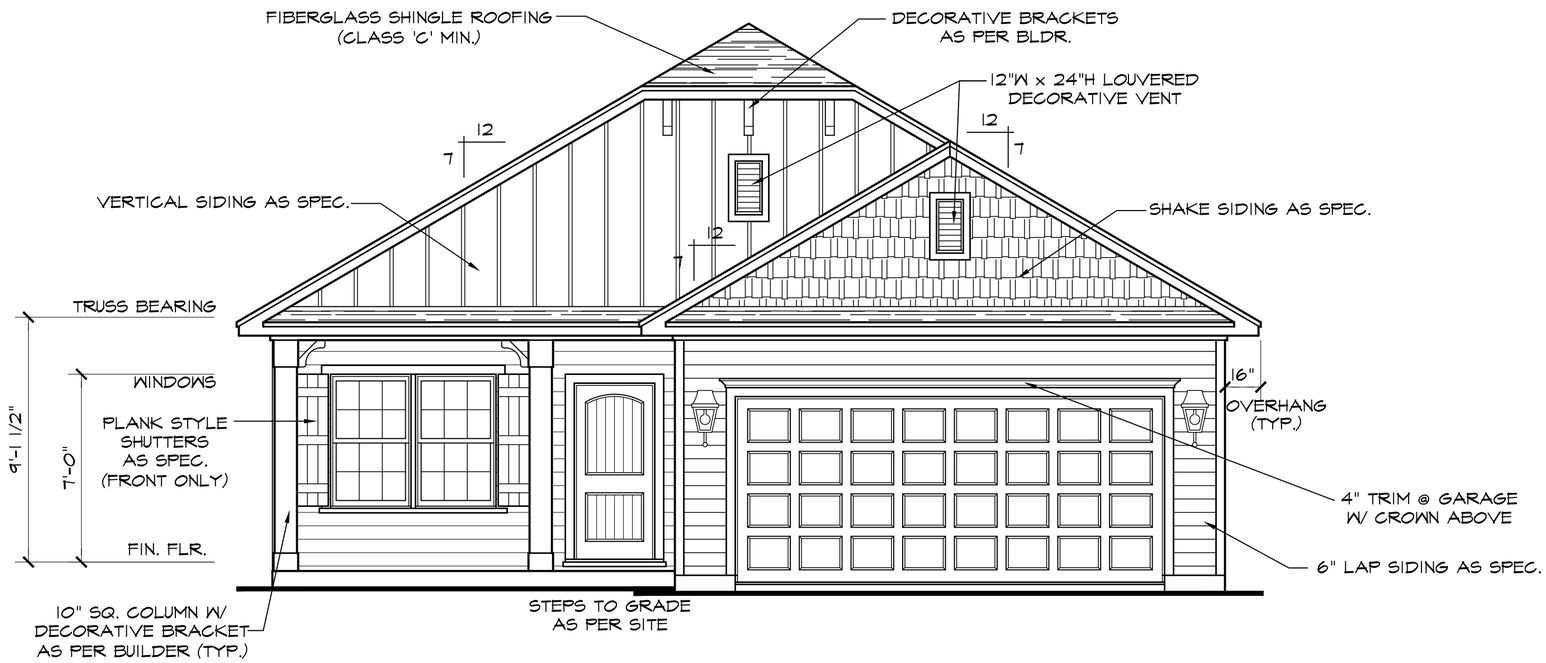

FRONT ELEVATION B

SCALE: 1/4"=1'-0"

NOTE - SLOPE ALL GRADES AWAY FROM HOUSE FOR POSITIVE DRAINAGE

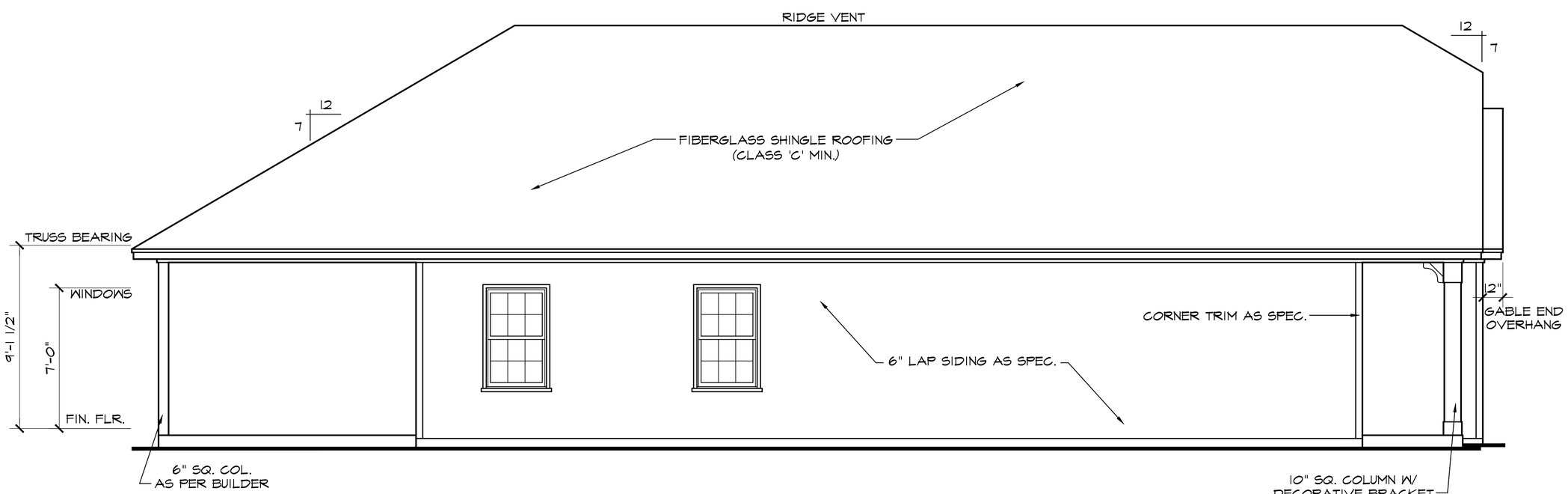

LEFT SIDE ELEVATION

SCALE: 1/4"=1'-0"

ADAMS HOMES AEC, LLC

1727 "B" FE (R) KC006

DATE DRAWN
5/1/2025
PROJECT
7589
REVISIONS
SHEET
1

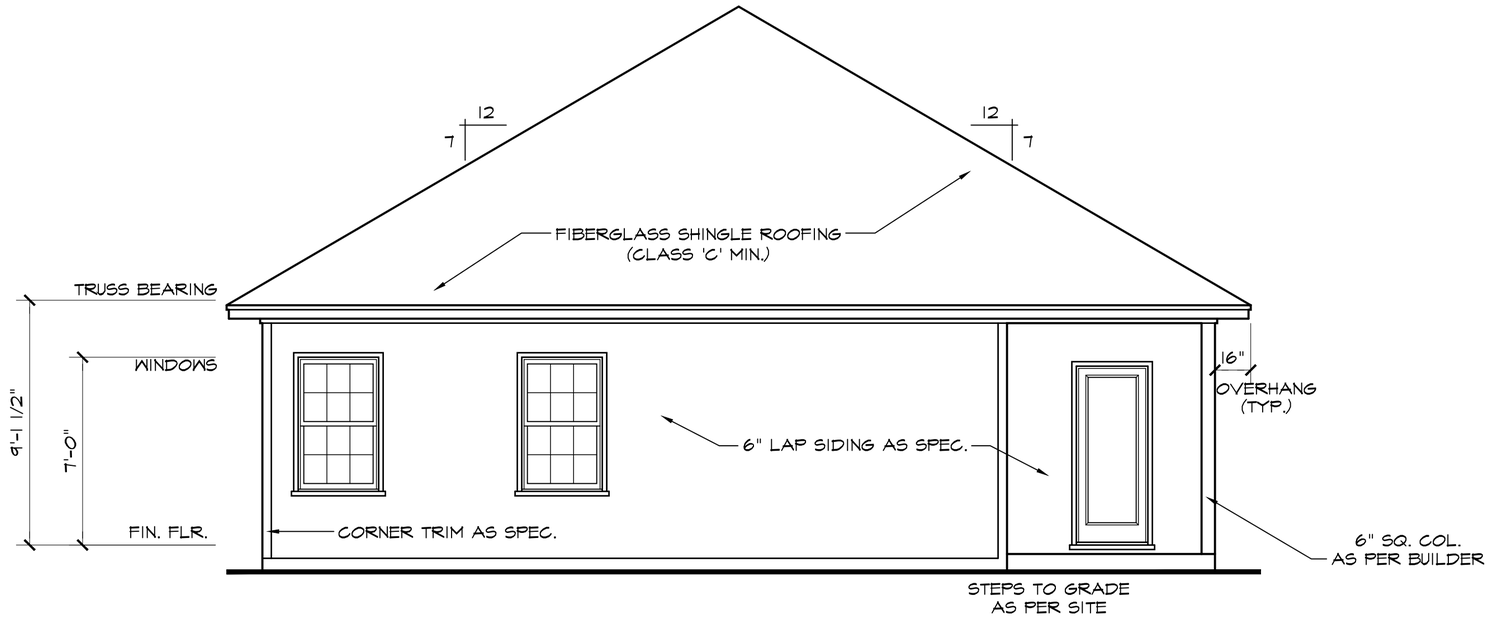

REAR ELEVATION

SCALE: 1/4"=1'-0"

NOTE - SLOPE ALL GRADES AWAY FROM HOUSE FOR POSITIVE DRAINAGE

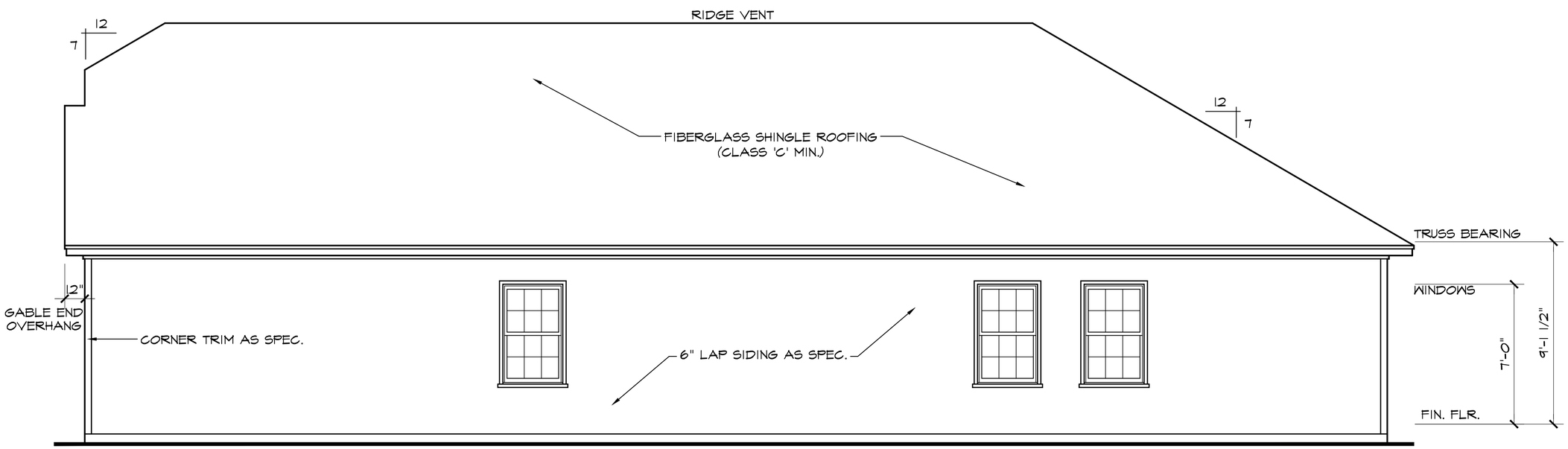

RIGHT SIDE ELEVATION

SCALE: 1/4"=1'-0"

ADAMS HOMES AEC, LLC

1727 "B" FE (R) KC006

DATE DRAWN
5/1/2025
PROJECT
7589
REVISIONS

SHEET

2

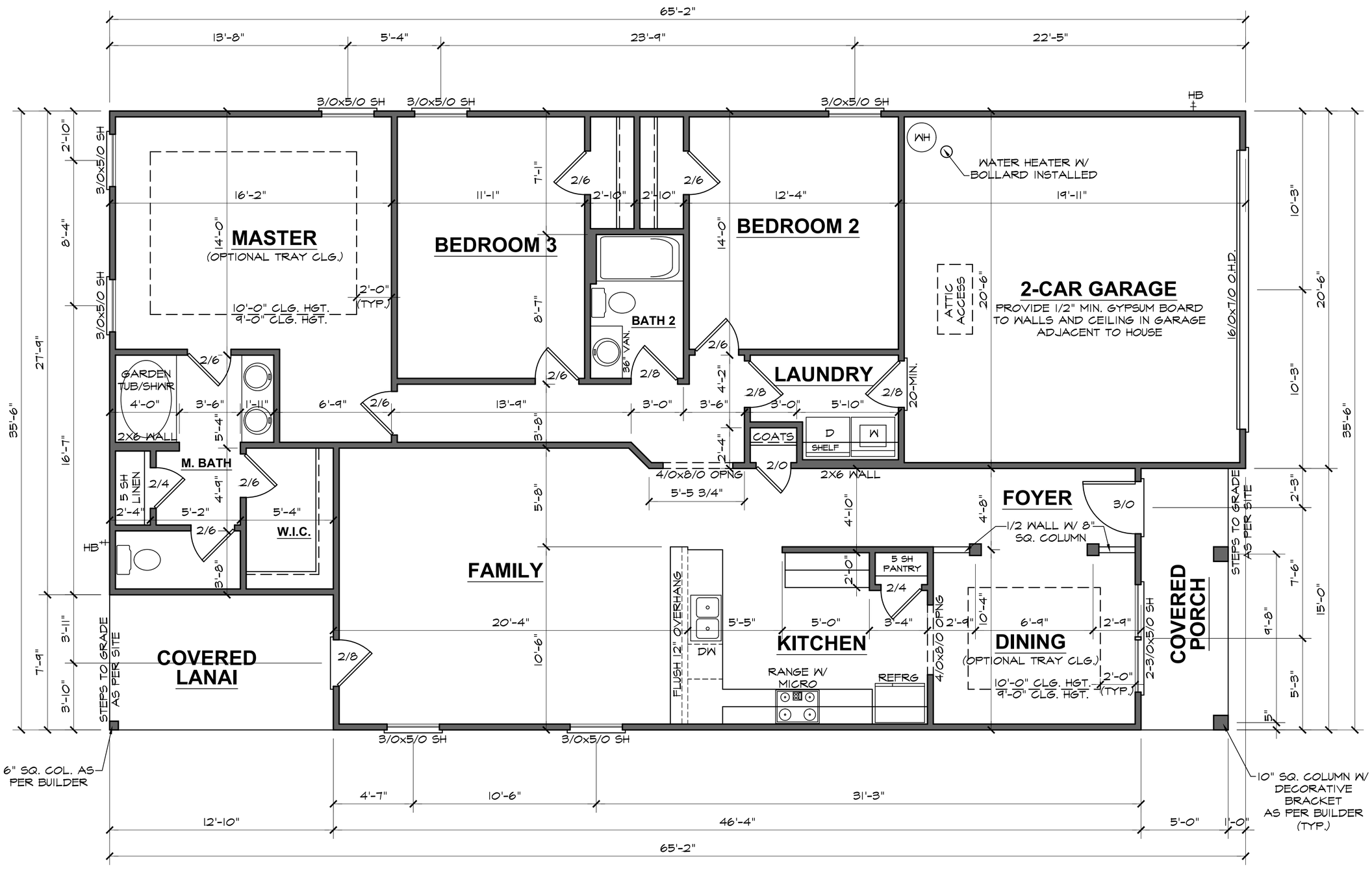

ADAMS HOMES AEC, LLC

1727 "B" FE (R) KC006

DATE DRAWN	5/1/2025
PROJECT	7589
REVISIONS	

SHEET 3

FLOOR PLAN

9'-0" (NOM.) CLG. HGT. U.N.O.
SET WINDOWS @ 7'-0" U.N.O.

SCALE: 1/4"=1'-0"

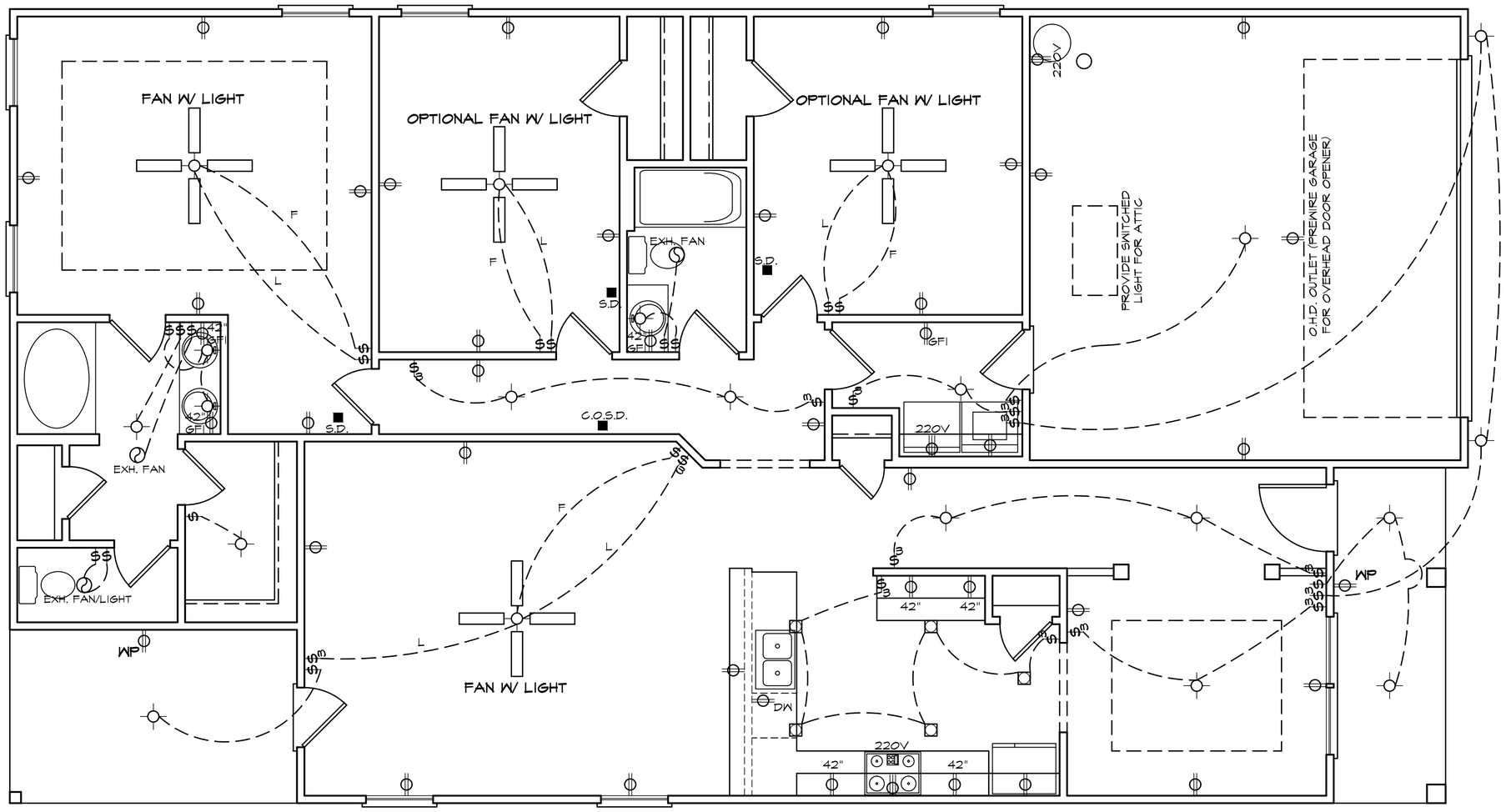

ELECTRICAL LEGEND

- LIGHT FIXTURE
- FAN/LIGHT
- WATERPROOF OUTLET
- RECESSED LIGHTING
- SINGLE PULL SWITCH
- 3-WAY SWITCH
- 4-WAY SWITCH
- DIMMER SWITCH
- SMOKE DETECTOR
- FLOOD LIGHTS
- EYEBALL SPOTS
- DUPLEX RECEPTACLE (110V)
- 220 VOLT RECEPTACLE
- SWITCHED RECEPTACLE (TOP WIRE ONLY)
- GROUND FAULT CIRCUIT INTERRUPTOR
- CLG FAN/LIGHTS
- TRACK LIGHTS
- FLUORESCENT LIGHTING
- CABLE OUTLET
- TELEPHONE OUTLET
- COMPUTER DATA OUTLET
- BURGLAR ALARM
- INTERCOM

NOTE: ALL ELECTRICAL TO BE VERIFIED BY OWNER/BUILDER BEFORE ROUGH-IN.

ELECTRICAL PLAN

NOTE - ELECTRICAL RECEPTACLE AND SWITCH QUANTITIES AND LOCATIONS SHOWN ON PLAN ARE FOR ILLUSTRATION PURPOSES ONLY. ACTUAL NUMBER AND LOCATIONS SHALL BE FIELD DETERMINED AS PER CLIENT AND BUILDER EXCEPT WHERE CODE REQUIREMENTS APPLY.

ADAMS HOMES AEC, LLC

1727 "B" FE (R) KC006

DATE DRAWN
5/1/2025
PROJECT
7589
REVISIONS

SHEET
4

Y	N	OPTIONAL MASTER BATH
		4' X 3' (1) PC. FIBERGLASS SHOWER IN LIEU OF LINEN CLOSET
		4' X 4' FIXED OBSCURED GLASS WINDOW

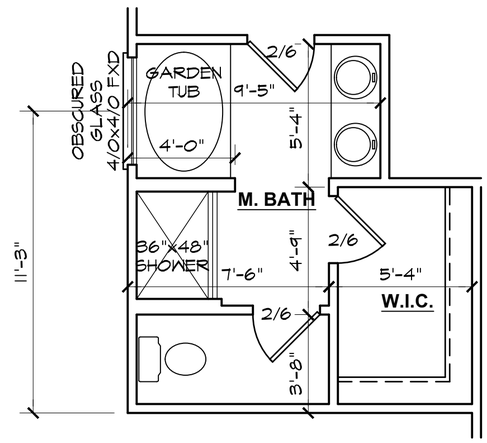

OPTIONAL MASTER BATH

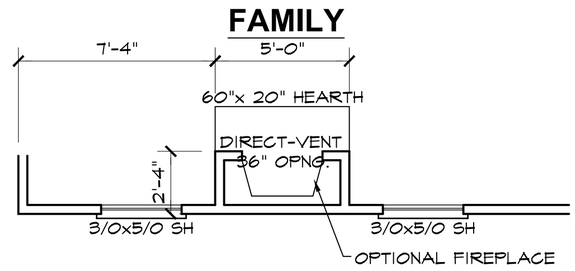

OPTIONAL FIREPLACE

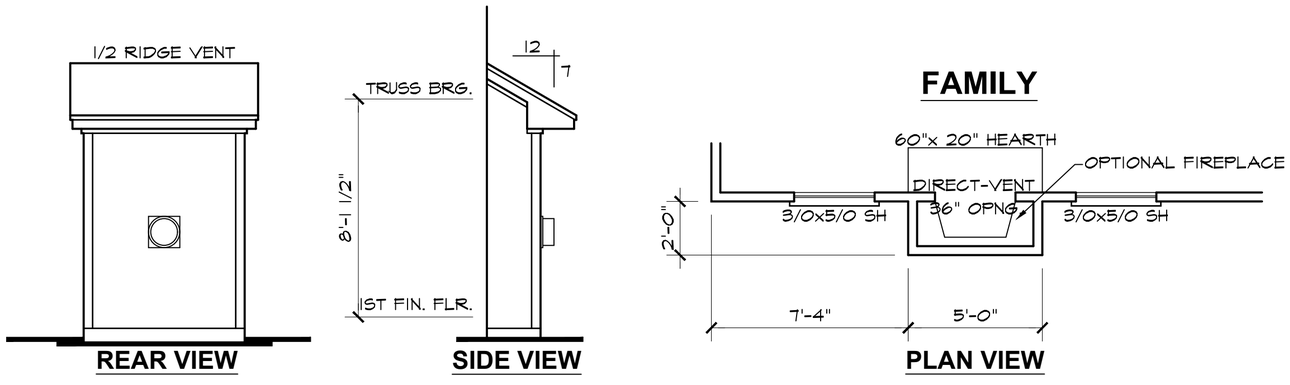

REAR VIEW

SIDE VIEW

PLAN VIEW

OPTIONAL FIREPLACE BUMP OUT

ADAMS HOMES AEC, LLC

FLOOR PLAN OPTION SHEET

1727 "B" FE (R) KC006

DATE DRAWN	5/1/2025
PROJECT	7589
REVISIONS	
SHEET	opt1

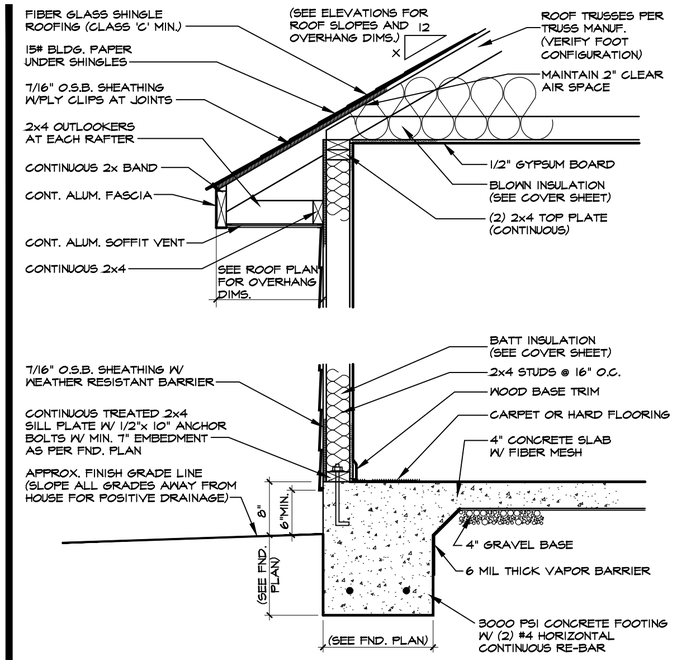

1 ONE-STORY WALL SECTION W/SIDING

SCALE: 3/4"=1'-0" MONO SLAB

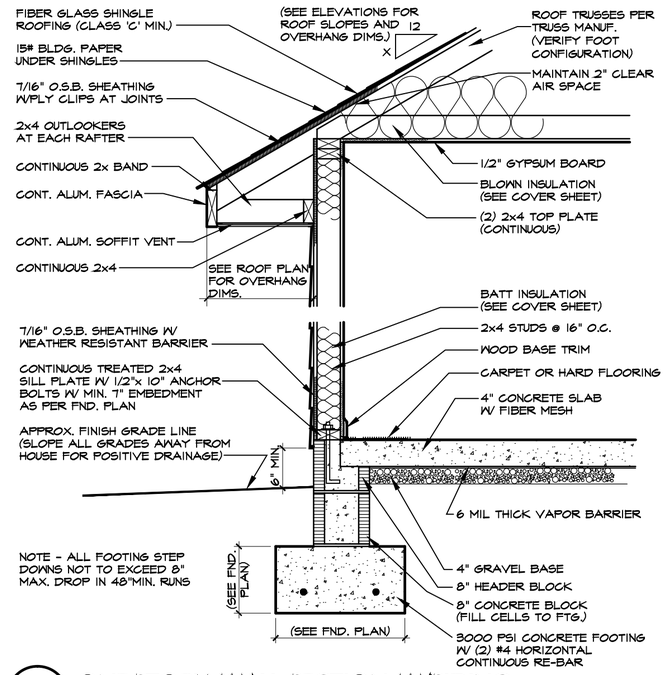

2 ONE-STORY WALL SECTION W/SIDING

SCALE: 3/4"=1'-0" BLOCK STEM WALL

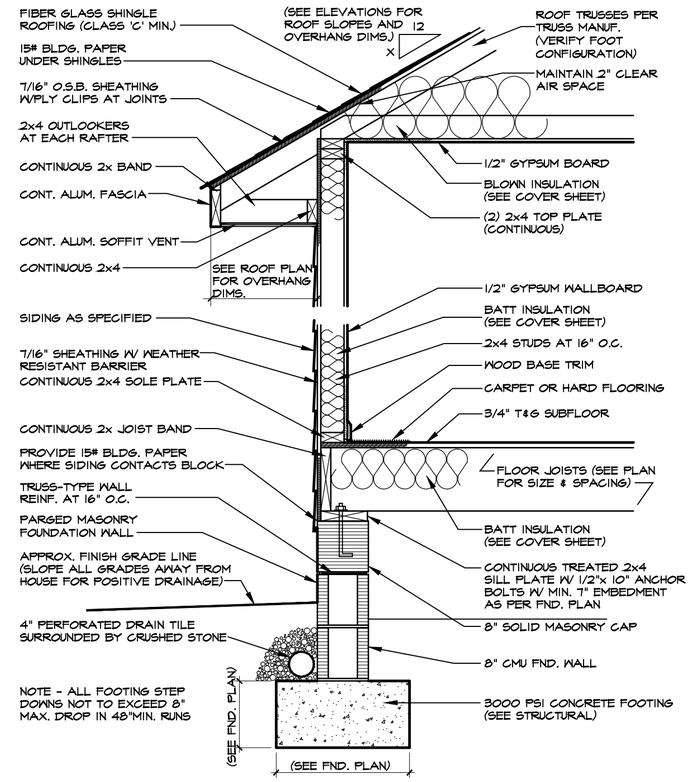

3 ONE-STORY WALL SECTION W/SIDING

SCALE: 3/4"=1'-0" (PARGED MASONRY FOUNDATION)

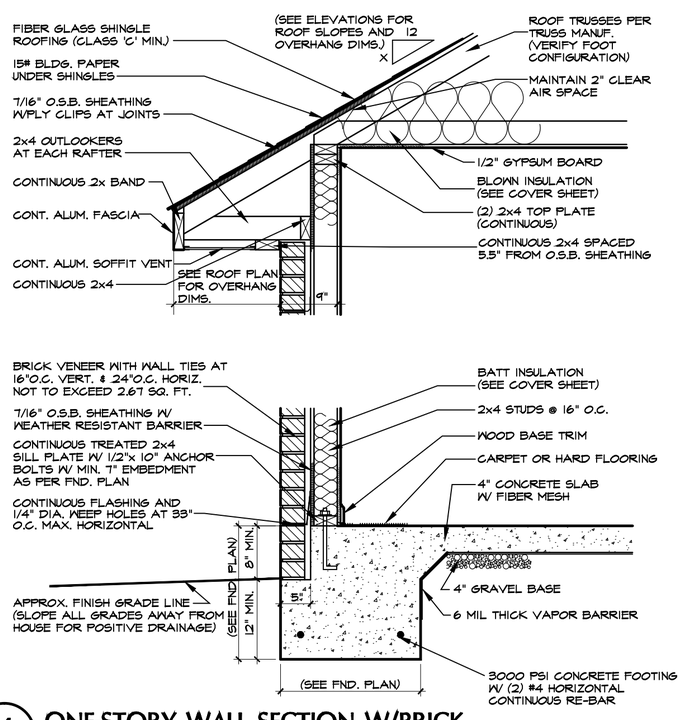

4 ONE-STORY WALL SECTION W/BRICK

SCALE: 3/4"=1'-0" BRICK & MONO SLAB

NOTE - PERIMETER SLAB INSULATION MAY BE DELETED IF CONSTRUCTION IS LOCATED IN CLIMATE ZONE 3.

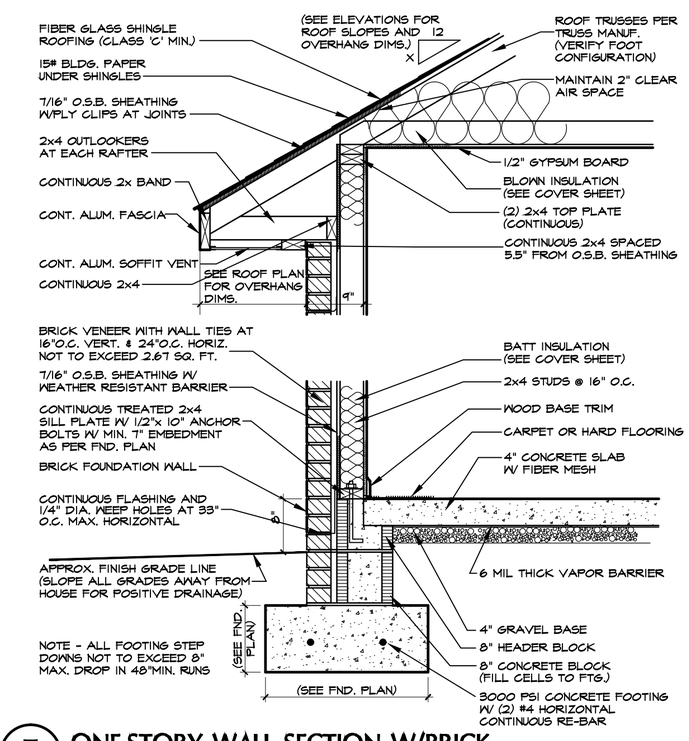

5 ONE-STORY WALL SECTION W/BRICK

SCALE: 3/4"=1'-0" BRICK & BLOCK STEM WALL

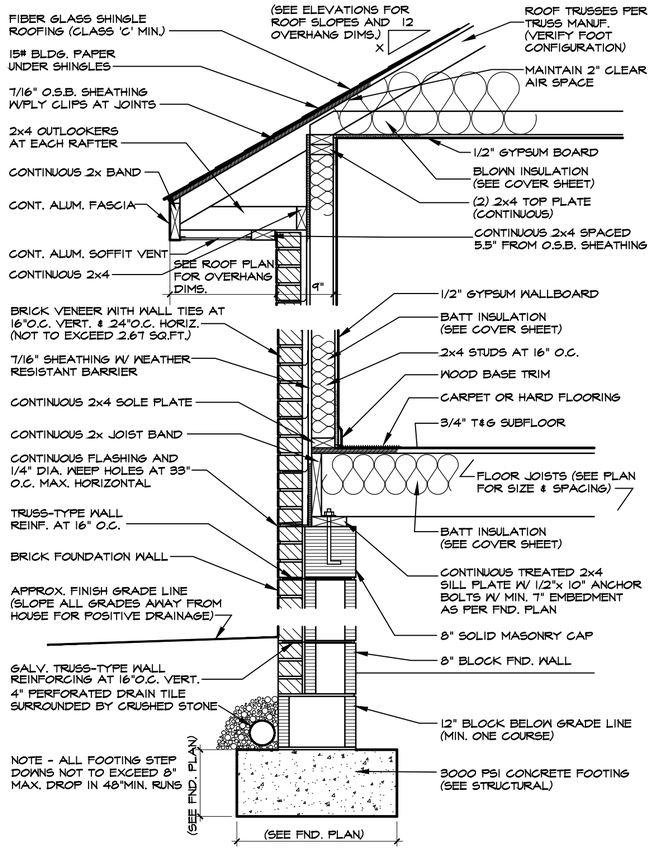

6 ONE-STORY WALL SECTION W/BRICK

SCALE: 3/4"=1'-0" (W/ 12" FOUNDATION WALL)

BL #CRC1330146

ADAMS HOMES AEC, LLC

149 US HWY 70 WEST
GARNER, NC 27529
919-233-6747 (office) 919-233-6780 (fax)

TYPICAL DETAIL SHEET

DATE DRAWN

REVISIONS

SHEET

D1

The structural design of this plan is the property of Engineering Tech Associates, P.A. These plans are for the one time use at the location and for the client listed. Engineering Tech Associates, P.A. assumes no liability for these plans if they are reproduced, in whole or in part, for construction at any other location without written permission from Engineering Tech Associates, P.A.

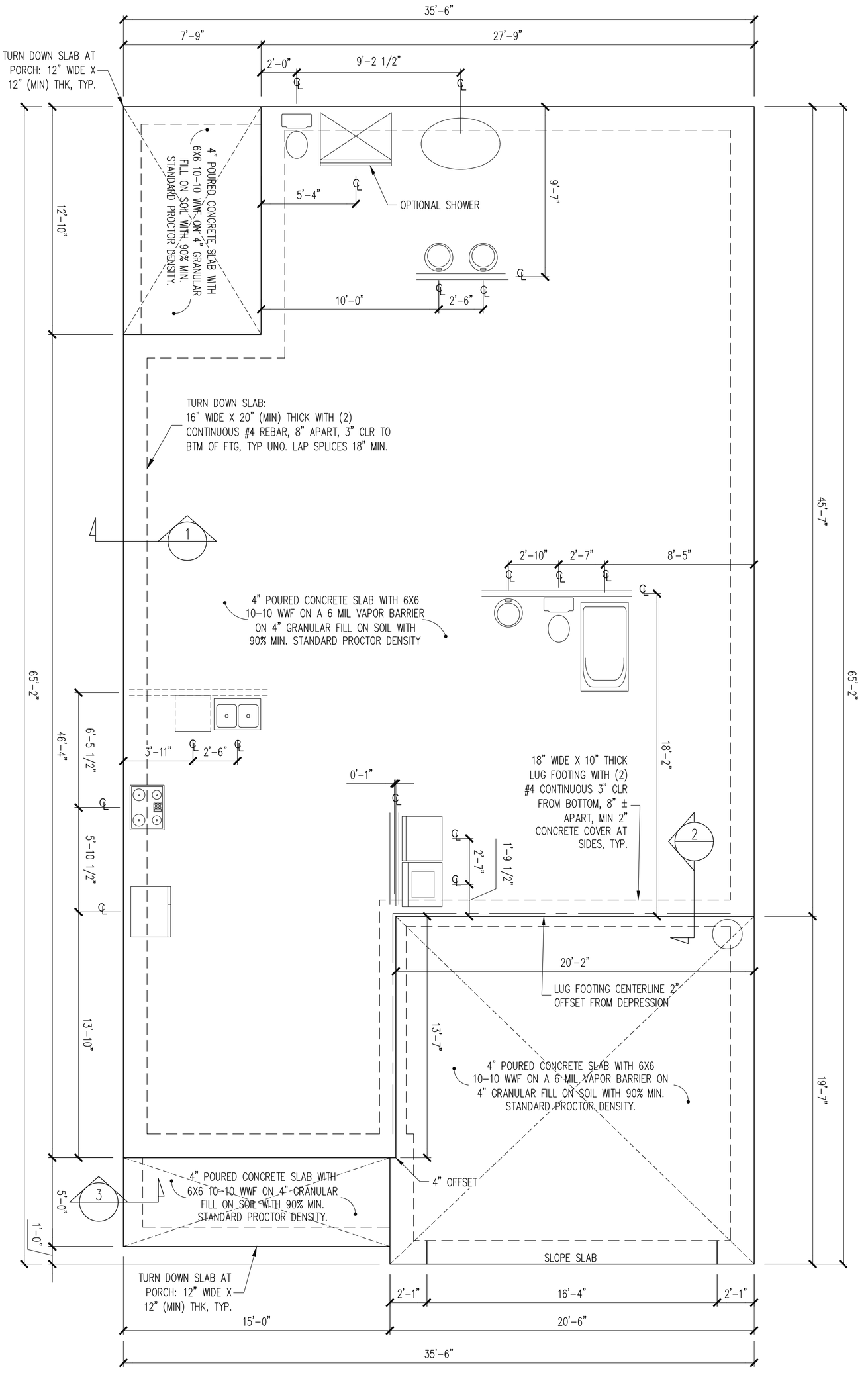

PLAN DESIGNED UNDER 2018 NORTH CAROLINA RESIDENTIAL CODE

NOTES:
- HEIGHT AND BACKFILL LIMITATIONS FOR FOUNDATION WALLS ARE TO BE GOVERNED BY THE NCSBC, LATEST EDITION.
- FIBER MESH REINFORCED CONCRETE MAY BE USED IN LIEU OF WELDED WIRE FABRIC. SEE SECTION 6.01 OF THE CONSTRUCTION SPECIFICATIONS FOR ALLOWABLE SUBSTITUTION DETAILS.
- ALL APPLIANCE AND PLUMBING LOCATIONS ARE FOR REFERENCE ONLY. FINAL LOCATIONS MUST BE VERIFIED WITH ARCHITECTURAL FLOOR PLANS.

FOUNDATION PLAN
MONO SLAB OPTION

1/4" = 1'-0"

SIDING OPTION

SHEET NO.	PROJECT NO.	PLAN NO.
S1 (1 of 6)	25-18-252	1727

ADAMS HOMES

SCOPE:	STRUCTURAL ADDENDUM		
LOT #:	6 KIPLING CREEK	ENG:	NBG/TSP
		REV:	
	1727 MASTER	DATE:	5-6-2025

NORTH CAROLINA PROFESSIONAL SEAL 046794 ENGINEER NATHANIEL B. GRAY 5-6-25

Engineering Tech ASSOCIATES, P.A.
STRUCTURAL ENGINEERS
License No. C-3870
318 W Millbrook Road, Unit 201
Raleigh, North Carolina 27609
Phone: (919) 844-1661

LINTEL SCHEDULE

WHEN APPLICABLE

L1 L 3 1/2 X 3 1/2 X 1/4 TYP UNO

L2 L 5 X 3 1/2 X 5/16

L3 L 6 X 4 X 5/16 ATTACHED TO HEADER (2)- 1/2" DIA. X 3" LONG LAG SCREWS AT 16" O.C.

L4 16 GAUGE FLEX LINTEL PER BUILDER

REQUIRED STUDS FOR BEAM SUPPORT

REFER TO SECTIONS 5.02 – 5.06 OF THE CONSTRUCTION SPECIFICATIONS FOR REQUIRED NUMBER OF STUDS FOR BEAM SUPPORT, TYP UNO.

HEADER SCHEDULE

H1 SINGLE 2X4 TURNED FLAT (A)

H2 (2) 2X4'S ON SINGLE JACKS (B)

H3 (2) 2X10'S ON SINGLE JACKS (C)

H4 (2) 1.75" X 9.25" LVL'S ON DBL JACKS

H5 (2) 2X10'S ON DBL JACKS

(A) TYPICAL FOR INTERIOR NON LOAD BEARING WALLS ONLY, ROUGH OPENING 38" MAX.

(B) TYPICAL FOR INTERIOR NON LOAD BEARING WALLS ONLY, ROUGH OPNG 38" TO 74" MAX.

(C) TYPICAL FOR ALL CONDITIONS NOT LISTED IN (A) OR (B) UNO.

NOTES:
- HEADERS IN NON LOAD BEARING INTERIOR WALLS ARE NOT LABELED.
- KING STUDS EXTERIOR WALLS:
  - SINGLE KING STUDS FOR 6' MAX OPENINGS.
  - DBL KING STUDS FOR 10' MAX OPENINGS.
  - TRPL KING STUDS FOR 14' MAX OPENINGS.
  - QUAD KING STUDS FOR 18' MAX OPENINGS.
  - FOR 2X6 WALLS, ONE HALF THE AMOUNT OF KING STUDS REQUIRED (ROUND UP) UNO

WALL BRACING

ALL EXTERIOR STUD WALLS ARE TO BE CONTINUOUSLY SHEATHED WITH 7/16 APA RATED OSB NAILED TO STUDS WITH 8d NAILS @ 6" O.C. AT PANEL EDGES, 12" O.C. IN PANEL FIELD.

SINGLE JOIST, CONTINUOUS RIM JOIST, OR BLOCKING OF EQUAL DEPTH IS REQUIRED ABOVE AND BELOW ALL BRACED WALLS. NAIL BLOCKING ABOVE WALL TO TOP PLATE WITH 8d TOE NAILS @ 6" O.C. NAIL SOLE PLATE OF BRACED WALL TO BLOCKING BELOW WITH (3) 16d NAILS @ 16" O.C. BLOCKING AT HORIZONTAL JOINTS IN BRACED WALL LINES ONLY REQUIRED AT SHADED WALLS, UNO.

SHADED WALLS:

PROVIDED CONTINUOUS SHEATHING = 201' MIN.

- WALL BRACING IS BY ENGINEERED DESIGN AND NOT PRESCRIPTIVE PER SECTION 602.10 OF THE 2018 NCRC. CONTINUOUS SHEATHING HAS BEEN PROVIDED, ALONG WITH ALTERNATIVE METHODS TO INSURE THE MINIMUM INTENT OF SECTION 602.10 OF THE 2018 NCRC HAS BEEN MET AND EXCEEDED.

- BRACED WALL PANELS SHALL BE FASTENED IN ACCORDANCE WITH TABLE 602.3(1) TO PROVIDE CONTINUOUS PANEL UPLIFT RESISTANCE AND COMPLIANCE WITH NCRBC R602.3.5 AND R802.11 UNLESS NOTED OTHERWISE ON STRUCTURAL PLANS.

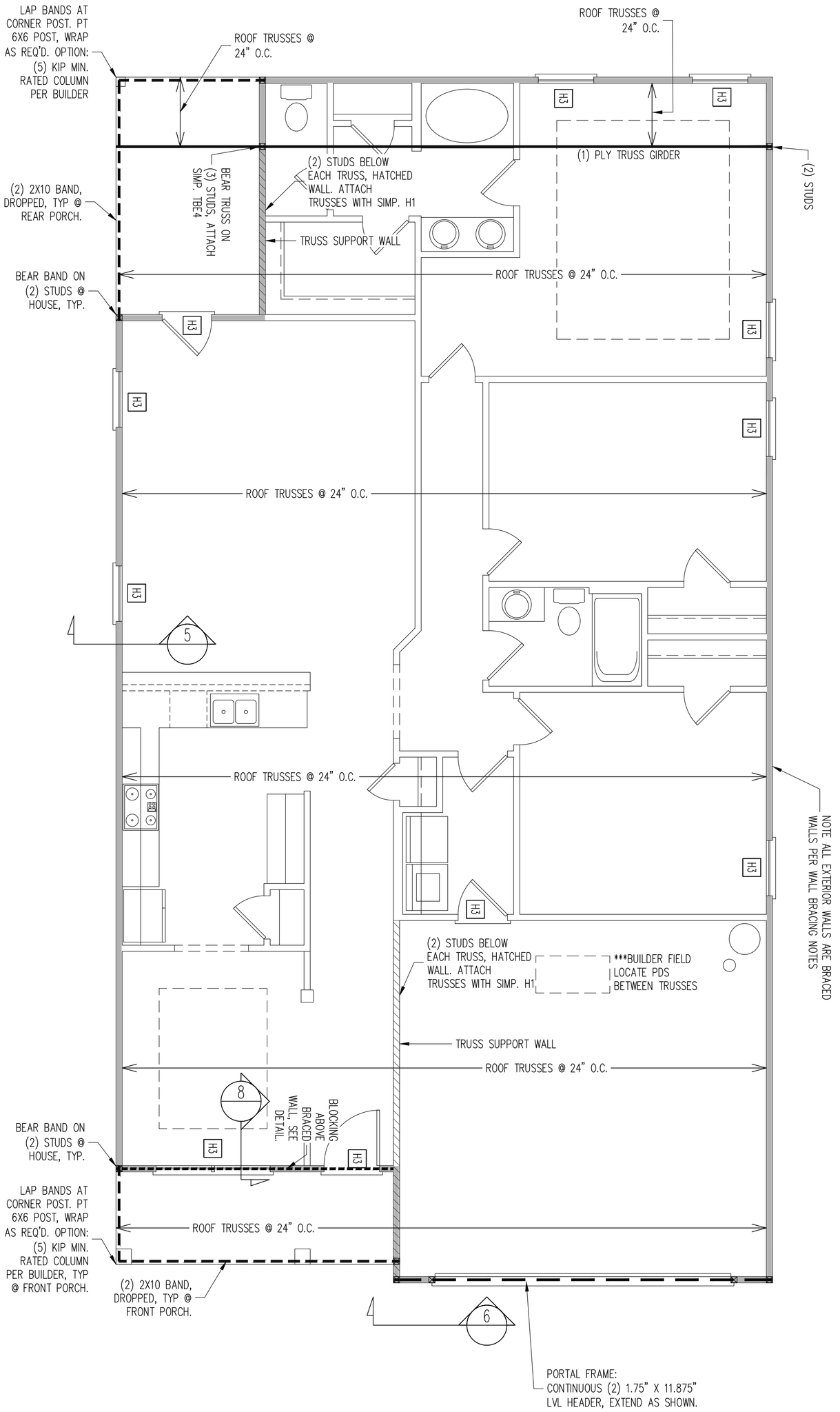

1ST FLOOR FRAMING PLAN

WALLS AND CEILING

1/4" = 1'-0"

SIDING OPTION ELEVATION B

SHEET NO.	PROJECT NO.	PLAN NO.
S2 (2 of 6)	25-18-252	1727

ADAMS HOMES

SCOPE:	STRUCTURAL ADDENDUM		
LOT #:	6 KIPLING CREEK	ENG:	NBG/TSP
		REV:	
	1727 MASTER	DATE:	5-6-2025

NORTH CAROLINA PROFESSIONAL SEAL 046794 ENGINEER NATHANIEL B. GRAY 5-0-25

Engineering Tech ASSOCIATES, P.A.
STRUCTURAL ENGINEERS
License No. C-3870
318 W Millbrook Road, Unit 201
Raleigh, North Carolina 27609
Phone: (919) 844-1661

The structural design of this plan is the property of Engineering Tech Associates, P.A. These plans are for the one time use at the location and for the client listed. Engineering Tech Associates, P.A. assumes no liability for these plans if they are reproduced, in whole or in part, for construction at any other location without written permission from Engineering Tech Associates, P.A.

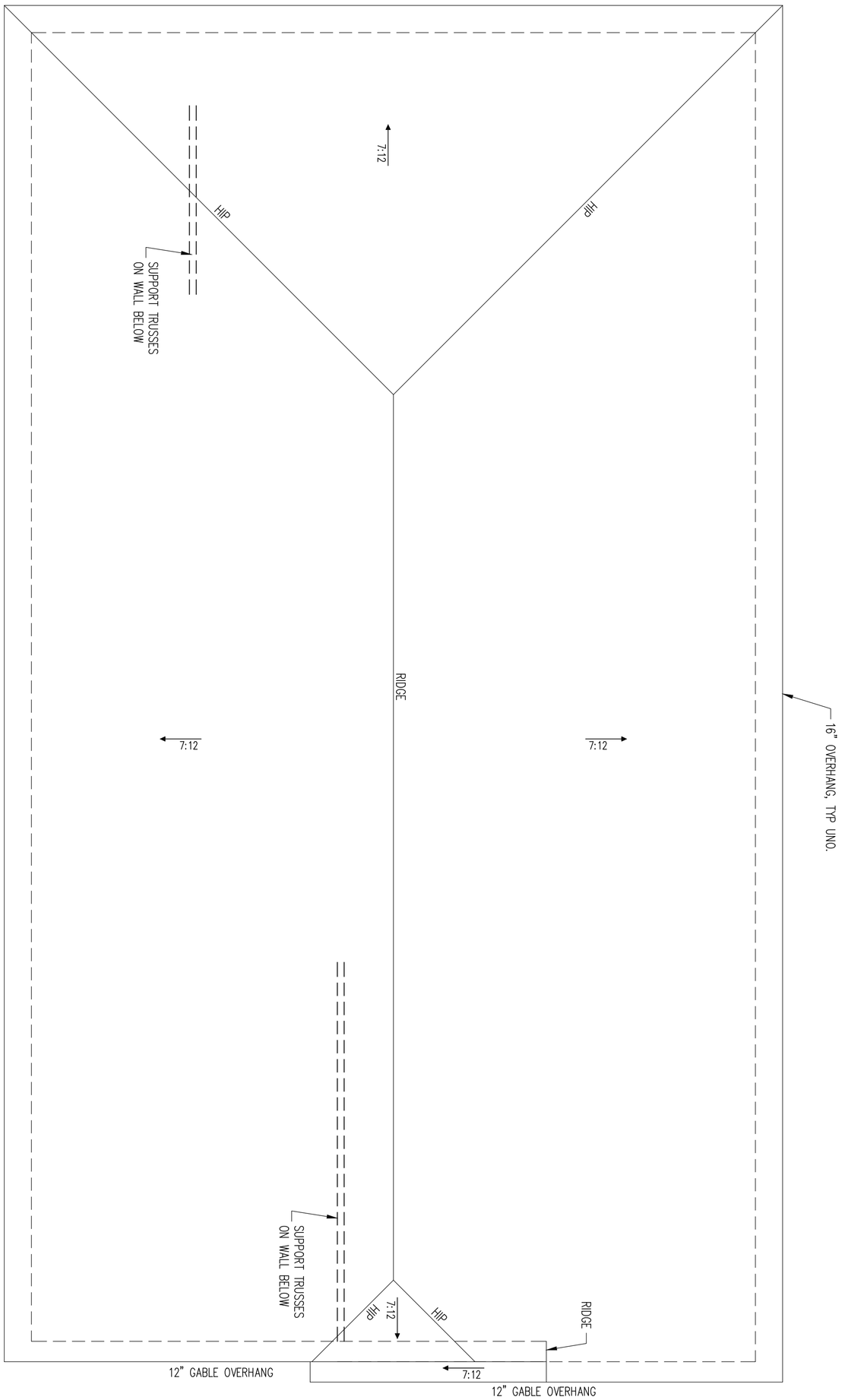

TRUSS UPLIFT CONNECTORS

EXPOSURE B, 120 MPH, ANY PITCH

24" O.C. MAX ROOF TRUSS SPACING

TRUSSES SHALL BE ATTACHED TO SUPPORT WALL FOR UPLIFT RESISTANCE. CONTINUOUS OSB WALL SHEATHING BELOW PROVIDES CONTINUOUS UPLIFT RESISTANCE TO FOUNDATION. ALL TRUSSES SUPPORTED BY INTERMEDIATE SUPPORT WALLS, KNEEWALLS OR BEAMS SHALL BE ATTACHED TO SUPPORTING MEMBER PER SCHEDULE BELOW.

ROOF SPAN IS MEASURED HORIZONTALLY BETWEEN FURTHEST SUPPORT POINTS.

ROOF SPAN	CONNECTOR
UP TO 18'	NAILING PER TABLE 602.3(1) NCRBC 2018 EDITION
OVER 18'	(1) SIMPSON H2.5A HURRICANE CLIP TO DBL TOP PLATE OR BEAM

FRAMING NOTES

ROOF ONLY

- ROOF TRUSSES PER MANU. TYPICAL U.N.O.
- ROOF PITCHES 7:12 TYP U.N.O.
- VERIFY ALL KNEEWALL HEIGHTS, ROOF PITCHES, AND ARCHITECTURAL OVERHANGS PRIOR TO CONSTRUCTION

ROOF FRAMING PLAN

1/4" = 1'-0"

SIDING OPTION ELEVATION B

SHEET NO.	PROJECT NO.	PLAN NO.
S3 (3 of 6)	25-18-252	1727

ADAMS HOMES

SCOPE:	STRUCTURAL ADDENDUM		
LOT #:	6 KIPLING CREEK	ENG:	NBG/TSP
		REV:	
	1727 MASTER	DATE:	5-6-2025

NORTH CAROLINA PROFESSIONAL SEAL 046794 ENGINEER NATHANIEL B. GRAY 5-6-25

Engineering Tech ASSOCIATES, P.A.
STRUCTURAL ENGINEERS
License No. C-3870
318 W Millbrook Road, Unit 201
Raleigh, North Carolina 27609
Phone: (919) 844-1661

CONSTRUCTION SPECIFICATIONS

PART 1: GENERAL

1.01 CONSTRUCTION SHALL MEET THE REQUIREMENTS OF THE NORTH CAROLINA RESIDENTIAL CODE, 2018 EDITION.

1.02 STRUCTURAL STEEL SHALL MEET THE REQUIREMENTS OF THE AISC SPECIFICATION FOR THE DESIGN, FABRICATION AND ERECTION OF STRUCTURAL STEEL FOR BUILDINGS.

1.03 REINFORCED CAST IN PLACE CONCRETE SHALL BE PROPORTIONED, MIXED AND PLACED IN ACCORDANCE WITH THE SPECIFICATIONS OF ACI 318, LATEST EDITION.

1.04 MASONRY CONSTRUCTION SHALL CONFORM TO THE SPECIFICATIONS OF ACI 530-95, LATEST EDITION.

1.05 METHODS, PROCEDURES AND SEQUENCES OF CONSTRUCTION ARE THE RESPONSIBILITY OF THE CONTRACTOR. THE CONTRACTOR SHALL TAKE ALL NECESSARY PRECAUTIONS TO MAINTAIN AND INSURE THE INTEGRITY OF THE STRUCTURE AT ALL STAGES OF CONSTRUCTION.

PART 2: DIMENSIONS

2.01 DIMENSIONS SHOWN SHALL GOVERN OVER SCALE ON THESE DRAWINGS.

PART 3: DESIGN LOADS

3.01 DESIGN LOADS SHALL CONFORM WITH THE TABLE BELOW:

USE	LIVE LOAD (PSF)	DEAD LOAD (PSF)
BALCONIES, DECKS, ATTICS WITH FIXED STAIR ACCESS, DWELLING UNITS (INCLUDUNG SLEEPING ROOMS), ATTICS WITH FIXED STAIR ACCESS, STAIRS, FIRE ESCAPES	40	10
GARAGES (PASSENGER CARS ONLY)	50	--
ATTICS (NO STORAGE, LESS THAN 5' HEADROOM)	10	10
ATTICS (WITH STORAGE)	20	10
ROOF	20	10 (15 FOR VAULTS)

NOTES:
- INDIVIDUAL STAIR TREADS ARE TO BE DESIGNED FOR THE UNIFORMLY DISTRIBUTED LIVE LOAD OR A 300 LB. CONCENTRATED LOAD ACTING OVER AN AREA OF 4 SQ. IN., WHICHEVER PRODUCES THE GREATER STRESS.
- GUARD RAILS AND HAND RAILS ARE TO BE DESIGNED FOR A SINGLE CONCENTRATED LOAD OF 200 LB. APPLIED IN ANY DIRECTION AT ANY POINT ALONG THE TOP.
- BUILDER TO VERIFY DEAD LOAD DOES NOT EXCEED 10 PSF WHEN HEAVY FLOOR OR ROOF FINISHES SUCH AS TILE OR SLATE ARE UTILIZED

3.02 INTERIOR WALLS: 5 PSF LATERAL.

3.03 BASIC WIND DESIGN VELOCITY OF 120 MPH.

3.04 LOAD DURATION FACTOR FOR ROOF STRUCTURAL MEMBERS IS 1.15.

3.05 SOIL BEARING CAPACITY 2000 PSF (PRESUMPTIVE).

PART 4: MATERIALS

4.01 STRUCTURAL STEEL SQUARE AND RECTANGULAR TUBING SHALL CONFORM TO ASTM A500 GRADE B MINIMUM GRADE. ALL OTHER STRUCTURAL STEEL SHALL CONFORM TO ASTM A992 MINIMUM GRADE TYP UNO.

4.02 REBAR SHALL BE DEFORMED STEEL CONFORMING TO ASTM A615 GRADE 60 TYP UNO

4.03 SOLID SAWN WOOD FRAMING DESIGN IS BASED ON NO. 2 SPRUCE PINE FIR FOR JOISTS, RAFTERS, WOOD GIRDERS/BEAMS, STUDS, ETC. ALLOWANCE HAS BEEN MADE FOR SYP #2 SUBSTITUTION TYP UNO.

4.04 LVL OR PSL MINIMUM ALLOWABLE DESIGN STRESSES ARE AS FOLLOWS:
E= 1.9 X 10E6 PSI, Fb = 2600 PSI, Fv = 285 PSI, Fc = 750 PSI

4.05 LSL MINIMUM ALLOWABLE DESIGN STRESSES ARE AS FOLLOWS:
E= 1.3 X 10E6 PSI, Fb = 1700 PSI, Fv = 400 PSI, Fc = 680 PSI

4.06 BOLTS SHALL CONFORM TO ASTM A307 MINIMUM GRADE TYP UNO

4.07 WELDING ELECTRODES SHALL BE E70XX

4.08 LUMBER IN CONTACT WITH THE GROUND, CONCRETE OR MASONRY SHALL BE PRESSURE TREATED IN ACCORDANCE WITH AWPA STANDARD C-15. ALL OTHER EXPOSED LUMBER SHALL BE TREATED IN ACCORDANCE WITH AWPA STANDARD C-2 OR BY ANY METHOD GIVING EQUAL PROTECTION. THE BUILDING CODE OFFICE MAY ALSO APPROVE A NATURAL DECAY RESISTANT WOOD PER SECTION 19-6(A)

4.09 CAST IN PLACE CONCRETE SHALL BE OF NORMAL WEIGHT AND SHALL HAVE A MINIMUM COMPRESSIVE STRENGTH OF 3000 PSI AT 28 DAYS TYP UNO.

4.10 CONCRETE MASONRY UNITS SHALL CONFORM TO ASTM C 90 OR ASTM C 55.

4.11 MORTAR SHALL BE TYPE S CONFORMING TO ASTM C 476.

4.12 NAILS SHALL BE COMMON WIRE NAILS TYP UNO.

4.13 LAG SCREWS SHALL CONFORM TO ANSI/ASME STANDARD B18.2.1-1981.

PART 5: CONSTRUCTION

5.01 FLITCH PLATE BEAMS SHALL CONSIST OF A CONTINUOUS STEEL PLATE BOLTED BETWEEN TWO PIECES OF CONTINUOUS LUMBER AS SIZED ON THE PLANS. BOLT PIECES TOGETHER USING 1/2" ø BOLTS SPACED AT 24" O.C. STAGGERED TOP TO BOTTOM OF THE BEAM. MAINTAIN A 2" EDGE DISTANCE. PLACE TWO BOLTS, ONE ABOVE THE OTHER, 6" FROM EACH END OF THE BEAM.

5.02 STEEL, LVL AND FLITCH PLATE BEAMS BEARING ON A STUD WALL PERPENDICULAR TO THE BEAM SHALL BEAR FULL WIDTH ON THE SUPPORTING WALL INDICATED AND SHALL BE SUPPORTED BY A MINIMUM OF THREE GANGED STUDS, OR A GANGED STUD COLUMN WITH A NUMBER OF STUDS SUCH THAT THE STUD COLUMN IS AT LEAST AS WIDE AS THE BEAM BEING SUPPORTED, WHICHEVER IS GREATER, TYP UNO.

5.03 STEEL, LVL AND FLITCH PLATE BEAMS BEARING ONTO THE END OF A STUD WALL PARALLEL TO THE BEAM SHALL BEAR A MINIMUM OF 4 1/2" ONTO THE WALL AND BE SUPPORTED BY A TRPL STUD GANGED COLUMN TYP UNO.

5.04 SOLID SAWN LUMBER GANGED BEAMS BEARING ON A STUD WALL PERPENDICULAR TO THE BEAM SHALL SHALL BEAR FULL WIDTH ON THE SUPPORTING WALL INDICATED (LESS 1 1/2" TO ALLOW FOR A CONTINUOUS RIM JOIST) AND SHALL BE SUPPORTED BY A GANGED STUD COLUMN THE SAME WIDTH AS THE BEAM TYP UNO.

5.05 SOLID SAWN LUMBER GANGED BEAMS BEARING ONTO THE END OF A STUD WALL PARALLEL TO THE BEAM SHALL BEAR A MINIMUM OF 3" ONTO THE WALL AND BE SUPPORTED BY A DBL STUD GANGED COLUMN TYP UNO.

5.06 EXTRA JOISTS OR SINGLE LVL MEMBERS OF 1.75" OR LESS WIDTH, BEARING ON A STUD WALL PERPENDICULAR TO THE BEAM SHALL BEAR ON THE WALL A MINIMUM OF 2" AND SHALL BE SUPPORTED BY ONE ADDITIONAL STUD.

5.07 SOLID SAWN LUMBER JOISTS THAT ARE GANGED TO FORM A BEAM SHALL HAVE ADJACENT MEMBERS IN THE BEAM NAILED TOGETHER WITH THREE ROWS OF 10d NAILS @ 16" O.C.

5.08 LVL MEMBERS THAT ARE GANGED TO FORM A BEAM SHALL HAVE ADJACENT MEMBERS IN THE BEAM FASTENED TOGETHER PER MANUFACTURERS RECOMMENDATIONS, TYP UNO

5.09 STUDS THAT ARE GANGED TO FORM A COLUMN SHALL HAVE ADJACENT STUDS WITHIN THE COLUMN NAILED TOGETHER WITH ONE ROW OF 10d NAILS AT 8" O.C. (TWO ROWS OF 10d NAILS @ 8" O.C., 3" APART, FOR 2X8 OR 2X10 STUDS) ALL COLUMNS SHALL BE CONTINUOUS DOWN TO THE FOUNDATION OR OTHER PROPERLY DESIGNED STRUCTURAL ELEMENT SUCH AS A BEAM. COLUMNS TRANSFERRING LOADS THROUGH FLOOR LEVELS SHALL BE SOLIDLY BLOCKED FOR THE FULL WIDTH OF THE STUD COLUMN WITHIN THE CAVITY FORMED BY THE FLOOR JOISTS.

5.10 STUD WALLS SHALL CONSIST OF 2X4 STUDS SPACED AT 16" O.C. UNO. STUDS SHALL BE CONTINUOUS FROM SOLE PLATE AT FLOOR TO DOUBLE TOP PLATE AT THE CEILING OR ROOF. NO INTERMEDIATE BANDS OR PLATES SHALL CAUSE DISCONTINUITIES IN A STUD WALL EXCEPT AS REQUIRED FOR DOOR OR WINDOW OPENINGS. THE KING STUDS FOR SUCH OPENINGS SHALL BE CONTINUOUS.

5.11 PILOT HOLES SHALL BE USED FOR LAG SCREW INSTALLATION AND SHALL BE BORED ACCORDING TO NDS SPECIFICATIONS.

5.12 ALL WELDING SHALL BE PERFORMED BY AN AWS CERTIFIED WELDER

5.13 ALL CONCRETE, INCLUDING CONCRETE FOR FOOTINGS, IS TO BE CAST IN PLACE, TYP UNO.

5.14 BOLTS AND LAG SCREWS USED FOR BOLTING WOOD MEMBERS SHALL HAVE STANDARD WASHERS INSTALLED FOR THE NUTS AND BOLT / SCREW HEADS

PART 6: SUBSTITUTIONS

6.01 IN LIEU OF WELDED WIRE FABRIC IN SLABS: SYNTHETIC POLYPROPYLENE FIBRILLATED MICRO FIBERS, FIBER LENGTH 1 1/2", DOSAGE RATE 1 1/2 LBS/CU YD.

6.02 OTHER MATERIAL OR MEMBER SIZE SUBSTITUTIONS REQUIRE THE WRITTEN AUTHORIZATION OF THE DESIGNERS. UNAUTHORIZED DEVIATIONS ARE THE SOLE RESPONSIBILITY OF THE CONTRACTOR.

DECK SPECIFICATIONS

1. A DECK IS AN EXPOSED EXTERIOR WOOD FLOOR STRUCTURE WHICH MAY BE ATTACHED TO A STRUCTURE OR BE FREE STANDING. ROOFED PORCHES, OPEN OR SCREENED IN, MAY BE CONSTRUCTED USING THESE PROVISIONS.

2. SUPPORT POSTS SHALL BE SUPPORTED BY A FOOTING.

3. WHEN ATTACHED TO A STRUCTURE, THE STRUCTURE TO WHICH ATTACHED SHALL HAVE A TREATED WOOD BAND FOR THE LENGTH OF THE DECK, OR CORROSION RESISTANT FLASHING SHALL BE USED TO PREVENT MOISTURE FROM COMING IN CONTACT WITH THE UNTREATED FRAMING OF THE STRUCTURE. THE DECK BAND AND THE STRUCTURE BAND SHALL BE CONSTRUCTED IN CONTACT WITH EACH OTHER EXCEPT AT BRICK VENEER AND WHERE PLYWOOD SHEATHING IS REQUIRED AND PROPERLY FLASHED. SIDING SHALL NOT BE INSTALLED BETWEEN THE STRUCTURE AND THE DECK BAND. IF ATTACHED TO A BRICK VENEER STRUCTURE, NEITHER FLASHING NOR A TREATED BAND FOR THE BRICK STRUCTURE IS REQUIRED. IN ADDITION, THE TREATED DECK BAND SHALL BE CONSTRUCTED IN CONTACT WITH THE BRICK VENEER.

4. WHEN THE DECK IS SUPPORTED AT THE STRUCTURE BY ATTACHING THE DECK TO THE STRUCTURE, THE FOLLOWING ATTACHMENT SCHEDULES SHALL APPLY FOR ATTACHING THE DECK BAND TO THE STRUCTURE:

A. ALL STRUCTURES EXCEPT BRICK VENEER STRUCTURES

	JOIST LENGTH	
	UP TO 8' MAX.	UP TO 16' MAX.
REQUIRED FASTENERS	ONE- 5/8" ø BOLT @ 42" O.C. AND (2) ROWS OF 12d NAILS @ 8" O.C. OR TWO ROWS OF SIMPSON SDWS22400DB @ d = 32" O.C. STAGGERED	ONE- 5/8" ø BOLT @ 20" O.C. AND (3) ROWS OF 12d NAILS @ 6" O.C. OR TWO ROWS OF SIMPSON SDWS22400DB @ d = 16" O.C. STAGGERED

A . BRICK VENEER STRUCTURES

	JOIST LENGTH	
	UP TO 8' MAX.	UP TO 16' MAX.
REQUIRED FASTENERS	ONE- 5/8" ø BOLT @ 28" O.C.	ONE- 5/8" ø BOLT @ 16" O.C.

5. IF THE DECK BAND IS SUPPORTED BY A 1/2" MINIMUM MASONRY LEDGE ALONG THE FOUNDATION WALL, 5/8" ø BOLTS SPACED @ 48" O.C. MAY BE USED FOR SUPPORT.

6. OTHER MEANS OF SUPPORT, SUCH AS JOIST HANGERS, MAY BE USED TO CONNECT DECK JOISTS TO A TREATED STRUCTURE BAND

7. GIRDERS SHALL BEAR DIRECTLY ON POSTS OR BE BE CONNECTED TO THE SIDES OF POSTS WITH 2- 5/8" ø BOLTS

8. FLOOR DECKING SHALL BE NO. 2 GRADE TREATED SOUTHERN PINE OR EQUIVALENT. THE MINIMUM FLOOR DECKING THICKNESS SHALL BE AS FOLLOWS:

JOIST SPAN	DECKING
12" O.C.	1" S4S
16" O.C.	1" T&G
24" O.C.	1 1/4" S4S
32" O.C.	2" S4S

9. MAXIMUM HEIGHT OF DECK SUPPORT POSTS IS AS FOLLOWS:

POST SIZE	MAX POST HEIGHT
4X4	8'
6X6	20'
ENGINEERED	20' +

NOTES: 1) THIS TABLE IS BASED ON NO. 2 TREATED SOUTHERN PINE POSTS.
2) THIS TABLE IS BASED ON A MAXIMUM TRIBUTARY AREA OF 128 SQ. FT.
3) POST HEIGHT IS FROM TOP OF FOOTING TO BOTTOM OF GIRDER.

10. DECKS SHALL BE BRACED TO PROVIDE LATERAL STABILITY BY ONE OF THE FOLLOWING METHODS:

A. WHEN THE DECK FLOOR HEIGHT IS LESS THAN 4'-0" AND THE DECK IS ATTACHED TO THE STRUCTURE IN ACCORDANCE WITH SECTION 4, LATERAL BRACING IS NOT REQUIRED.

B. 4X4 WOOD KNEE BRACES MAY BE PROVIDED ON EACH COLUMN IN BOTH DIRECTIONS. THE KNEE BRACES SHALL ATTACH TO EACH POST AT A POINT NOT LESS THAN 1/3 OF THE POST LENGTH FROM THE TOP OF THE POST, AND THE BRACES SHALL BE ANGLED BETWEEN 45° AND 60° FROM THE HORIZONTAL. KNEE BRACES SHALL BE ATTACHED AT THE ENDS TO THE GIRDER AND THE POST WITH ONE - 5/8"ø BOLT

C. FOR FREE STANDING DECKS WITHOUT KNEE BRACES OR DIAGONAL BRACING, LATERAL STABILITY MAY BE PROVIDED BY EMBEDDING THE POSTS IN CONCRETE IN ACCORDANCE WITH THE FOLLOWING:

POST SIZE	TRIBUT. AREA	POST HEIGHT	EMB. DEPTH	CONC. DIAM.
4X4	48 SQ. FT.	4'-0"	2'-6"	1'-0"
6X6	120 SQ. FT.	6'-0"	3'-6"	1'-8"

D. 2X6 DIAGONAL VERTICAL CROSS BRACING SHALL BE PROVIDED IN TWO PERPENDICULAR DIRECTIONS FOR FREE STANDING DECKS OR PARALLEL TO THE STRUCTURE AT THE EXTERIOR COLUMN LINE FOR ATTACHED DECKS. THE BRACES SHALL BE ATTACHED TO THE POSTS WITH ONE - 5/8" ø BOLT AT EACH END OF THE BRACE.

NOTES: 1) ALL NAILS AND BOLTS ARE TO BE HOT DIPPED GALVANIZED.
2) MINIMUM EDGE DISTANCE FOR BOLTS IS 2 1/2".
3) NAILS MUST PENETRATE THE SUPPORTING STRUCTURE BAND A MINIMUM OF 1 1/2".

NOTES

ALL WORK IS TO BE DONE IN STRICT ACCORDANCE WITH STATE AND LOCAL CODES. THE BUILDER IS RESPONSIBLE FOR REVIEWING PLANS PRIOR TO CONSTRUCTION. IF ENGINEERING SERVICES HAS BEEN PROVIDED THE BUILDER SHALL VERIFY THAT THE FOUNDATION AND STRUCTURAL PLANS HAVE BEEN SEALED BY AN ENGINEER REGISTERED BY THE STATE. IF THE PLANS HAVE NOT BEEN SIGNED AND SEALED, THE BUILDER SHALL IMMEDIATELY CONTACT ENGINEERING TECH BEFORE PROCEEDING FURTHER. ANY ERRORS DUE TO A FAILURE TO FOLLOW THE ABOVE PROCEDURES SHALL NOT BE THE RESPONSIBILITY OF ENGINEERING TECH. ALL FINAL SETS OF THE SAME PLAN ISSUED TO A BUILDER SHOULD BE REVIEWED FOR UNIFORMITY, ESPECIALLY IF PRIOR SETS OF PLANS HAVE BEEN ISSUED AS STUDY COPIES.

ENGINEERING TECH DOES NOT PERFORM FENESTRATION, ROOF VENT, OR ATTIC CALCULATIONS OR ANY OTHER AREA CALCULATIONS THAT ARE NOT RELATED TO STRUCTURAL ENGINEERING.

TRUSSES TO BE DESIGNED BY AN ENGINEER REGISTERED IN NORTH CAROLINA. FINAL TRUSS DRAWING SHOULD BE SUBMITTED TO ENGINEERING TECH ASSOCIATES, PA FOR REVIEW

ABBREVIATIONS

ABV	ABOVE
B.	BOTH
B.E.	BOTH ENDS
BTWN	BETWEEN
CONC	CONCRETE
CS	CONTINUOUS SHEATHING
DIA	DIAMETER
DBL	DOUBLE
DJ	DOUBLE JOIST
DSP	DBL STUD POCKET
EQ	EQUAL
EA	EACH
FLG	FLANGE
FL PL	FLITCH PLATE
FLR	FLOOR
FND	FOUNDATION
FTG	FOOTING
HDG	HOT DIPPED GALVANIZED
HGR	HANGER
LVL	LAMINATED VENEER LUMBER
NTS	NOT TO SCALE
O.C.	ON CENTER
PSL	PARALLEL STRAND LUMBER
PT	PRESSURE TREATED
QJ	QUAD JOIST
SP	STUD POCKET
SQ	SQUARE
TJ	TRIPLE JOIST
TYP	TYPICAL
TRPL	TRIPLE
TSP	TRIPLE STUD POCKET
UNO	UNLESS NOTED OTHERWISE
XJ	EXTRA JOIST

Engineering Tech ASSOCIATES, P.A.
STRUCTURAL ENGINEERS
License No. C-3870
318 W Millbrook Road, Unit 201
Raleigh, North Carolina 27609
Phone: (919) 844-1661

NORTH CAROLINA PROFESSIONAL SEAL 046794 ENGINEER NATHANIEL B. GRAY 5-6-2025

ADAMS HOMES
SCOPE: STRUCTURAL ADDENDUM
LOT #: 6 KIPLING CREEK
ENG: NBG/TSP
REV:
DATE: 5-6-2025
1727 MASTER

PLAN NO. 1727

PROJECT NO. 25-18-252

SHEET NO. SPEC

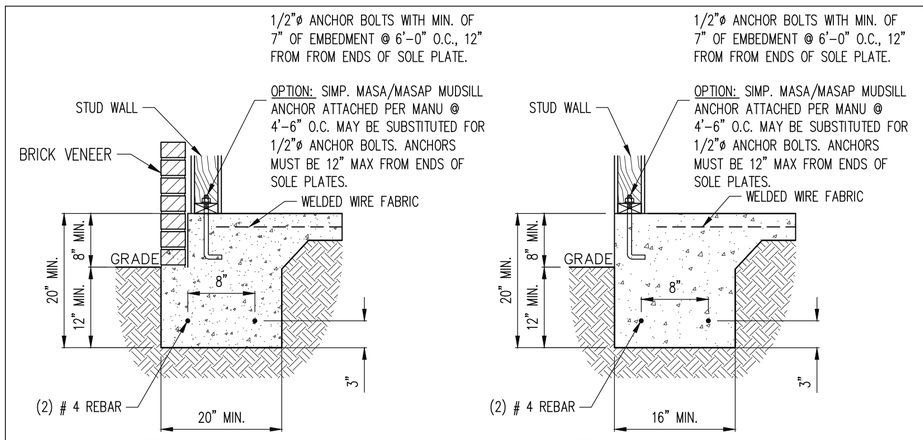

1 SECTION
TURN DOWN SLAB W/ BRICK VENEER
3/4" = 1'-0"

1 SECTION
TURN DOWN SLAB
3/4" = 1'-0"

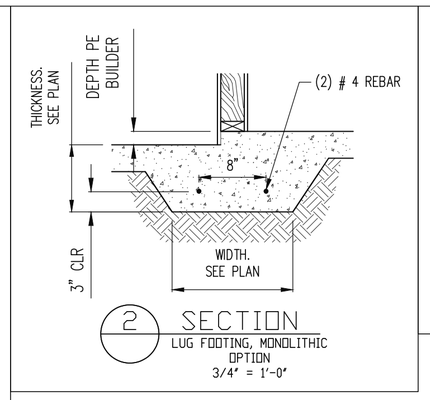

2 SECTION
LUG FOOTING, MONOLITHIC OPTION
3/4" = 1'-0"

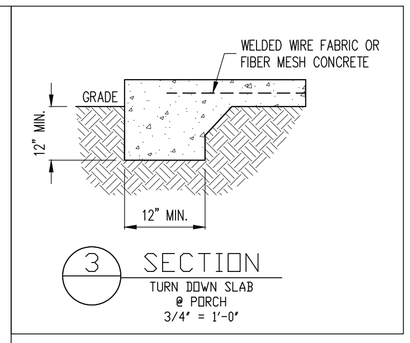

3 SECTION
TURN DOWN SLAB @ PORCH
3/4" = 1'-0"

4 SECTION
N/A
3/4" = 1'-0"

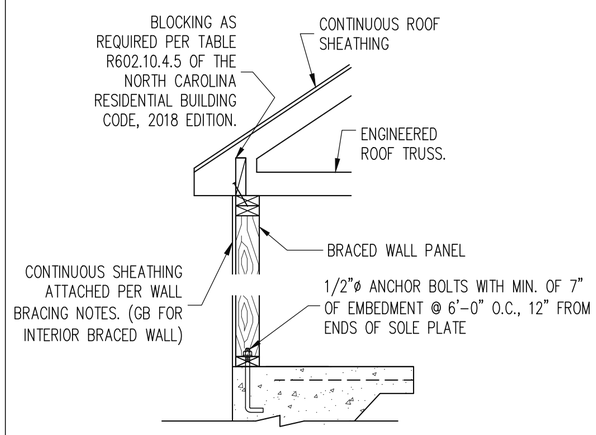

5 SECTION
TYPICAL BRACED WALL PANEL CONNECTION
3/4" = 1'-0"

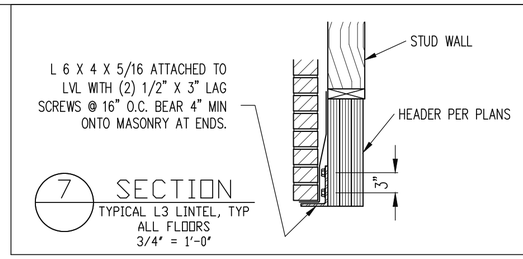

7 SECTION
TYPICAL L3 LINTEL, TYP ALL FLOORS
3/4" = 1'-0"

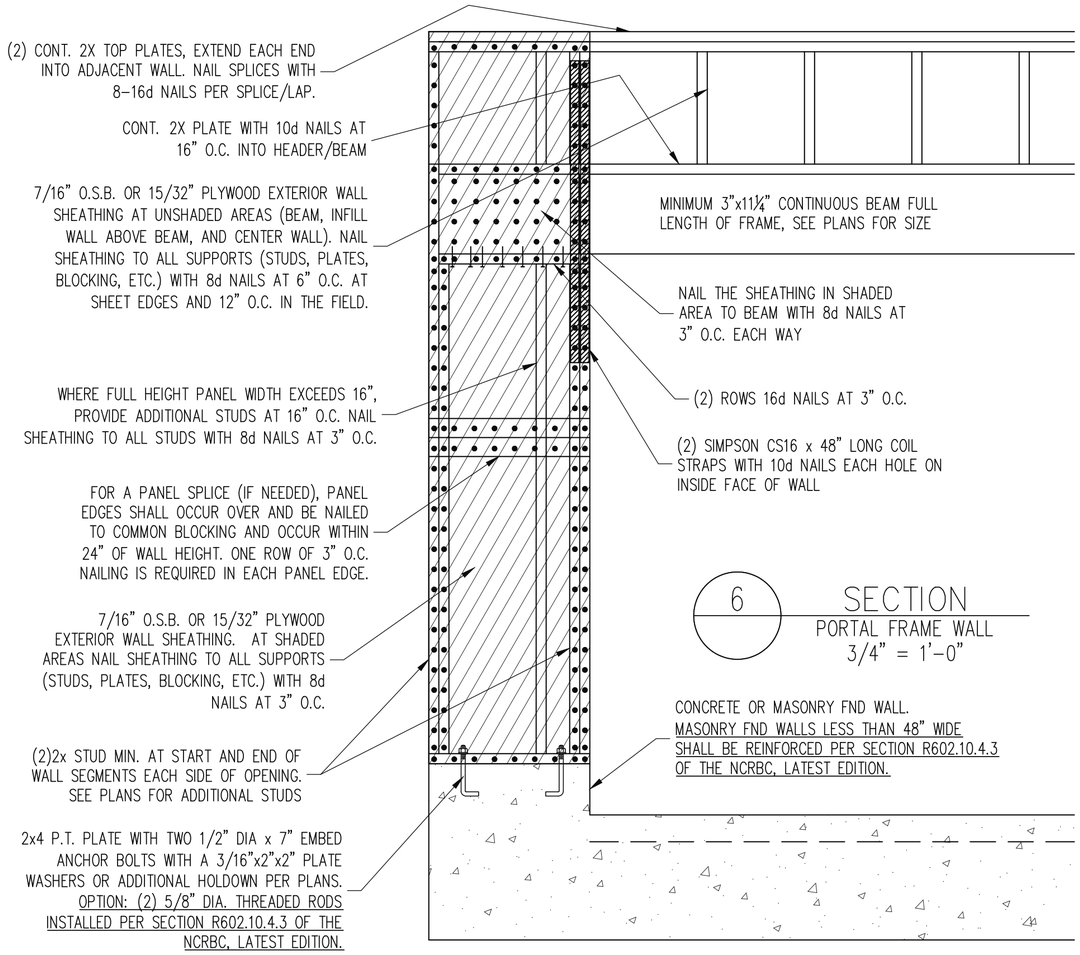

6 SECTION
PORTAL FRAME WALL
3/4" = 1'-0"

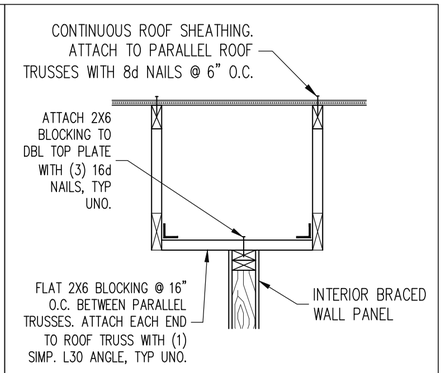

8 SECTION
INTERIOR BRACED WALL WITH PARALLEL ROOF TRUSSES, NOT ABOVE WALL, TYP.
3/4" = 1'-0"

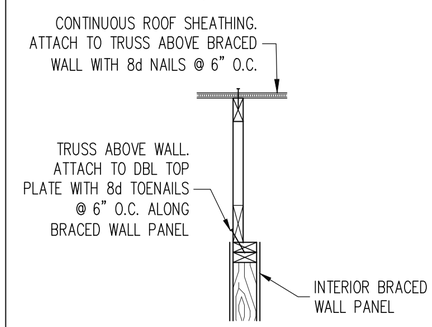

8 SECTION
INTERIOR BRACED WALL WITH PARALLEL ROOF TRUSS ABOVE WALL, TYP.
3/4" = 1'-0"

MONOSLAB

STRUCTURAL ENGINEERS
License No. C-3870
318 W Millbrook Road, Unit 201
Raleigh, North Carolina 27609
Phone: (919) 844-1661
Engineering Tech ASSOCIATES, P.A.

NORTH CAROLINA PROFESSIONAL SEAL 046794 ENGINEER NATHANIEL B. GRAY 5-6-25

ADAMS HOMES
STRUCTURAL ADDENDUM
SCOPE:
LOT #: 6 KIPLING CREEK
ENG: NBG/TSP
REV:
DATE: 5-6-2025
1727 MASTER

PLAN NO.
1727

PROJECT NO.
25-18-252

SHEET NO.
SD1

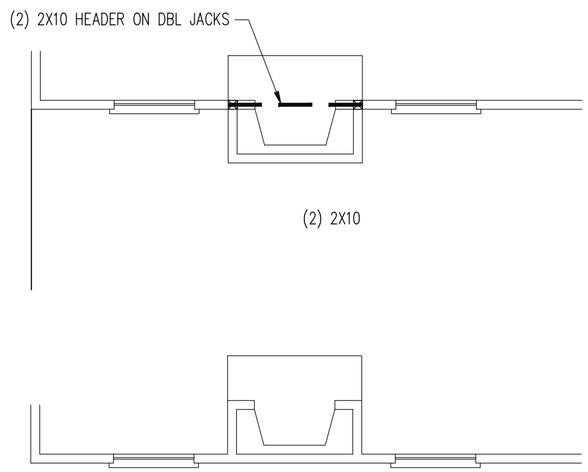

OPTIONAL FIREPLACE

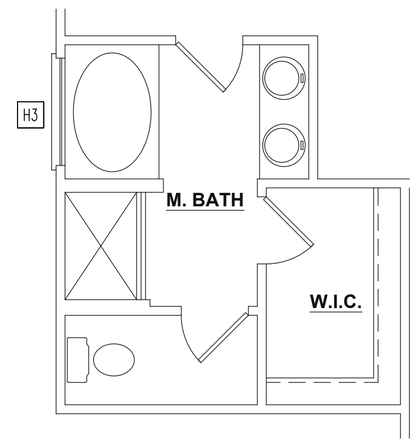

OPTIONAL MASTER BATH

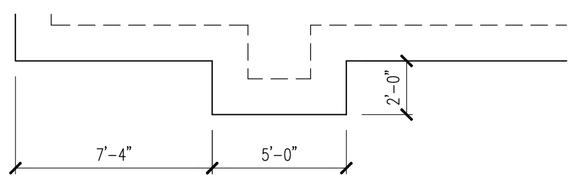

OPTIONAL FIREPLACE BUMP OUT

Engineering Tech ASSOCIATES, P.A.
STRUCTURAL ENGINEERS
License No. C-3870
318 W Millbrook Road, Unit 201
Raleigh, North Carolina 27609
Phone: (919) 844-1661

NORTH CAROLINA PROFESSIONAL SEAL 046794 ENGINEER NATHANIEL B. GRAY 5-6-25

ADAMS HOMES	
SCOPE:	STRUCTURAL ADDENDUM
LOT #:	6 KIPLING CREEK
	1727 MASTER
ENG:	NBG/TSP
REV:	
DATE:	5-6-2025

PLAN NO.
1727

PROJECT NO.
25-18-252

SHEET NO.
S6