STONEFIELD-RALE

RALEIGH - LOT 00.0039 HONEYCUTT HILLS SF

(MODEL# 1635)

ELEVATION 2 - GR

228 Shelby Meadow Lane

INDEX

DRB HOMES

AREA CALCULATIONS

ELEVATION 2	HEATED	COVERED / UNHEATED	UNCOVERED
FIRST FLOOR	1572 SF		
GARAGE		496 SF	
FRONT PORCH – ELEVATION 2		145 SF	
SECOND FLOOR	1646 SF		
OPTIONS			
EXT. BRKFST W/ EXT. OWNER'S SUITE/ SCREEN	+186 SF	+160 SF	
3RD CAR GARAGE		+264 SF	
BED 5 W/ BATH 3	+55 SF	–55 SF	
FIREPLACE	+10 SF		
TOTAL	3469 SF	1010 SF	

LOT SPECIFIC

1	LOT 00.0039	HONEYCUTT HILLS SF
		STONEFIELD REV. RALE–3 ELEVATION 2
2	ADDRESS	228 SHELBY MEADOW LANE ANGIER, NC 27501

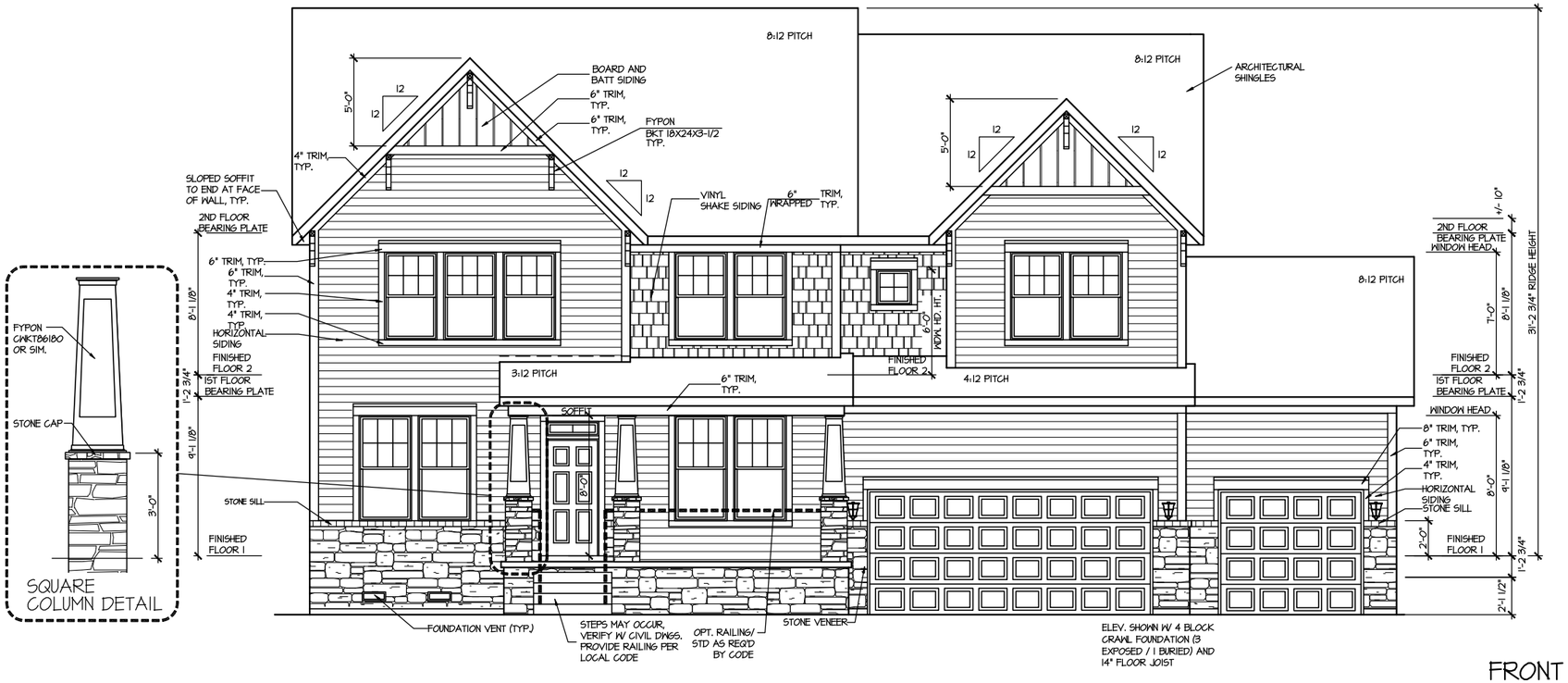

FRONT ELEVATION 2

SCALE: 1/8" = 1'-0"

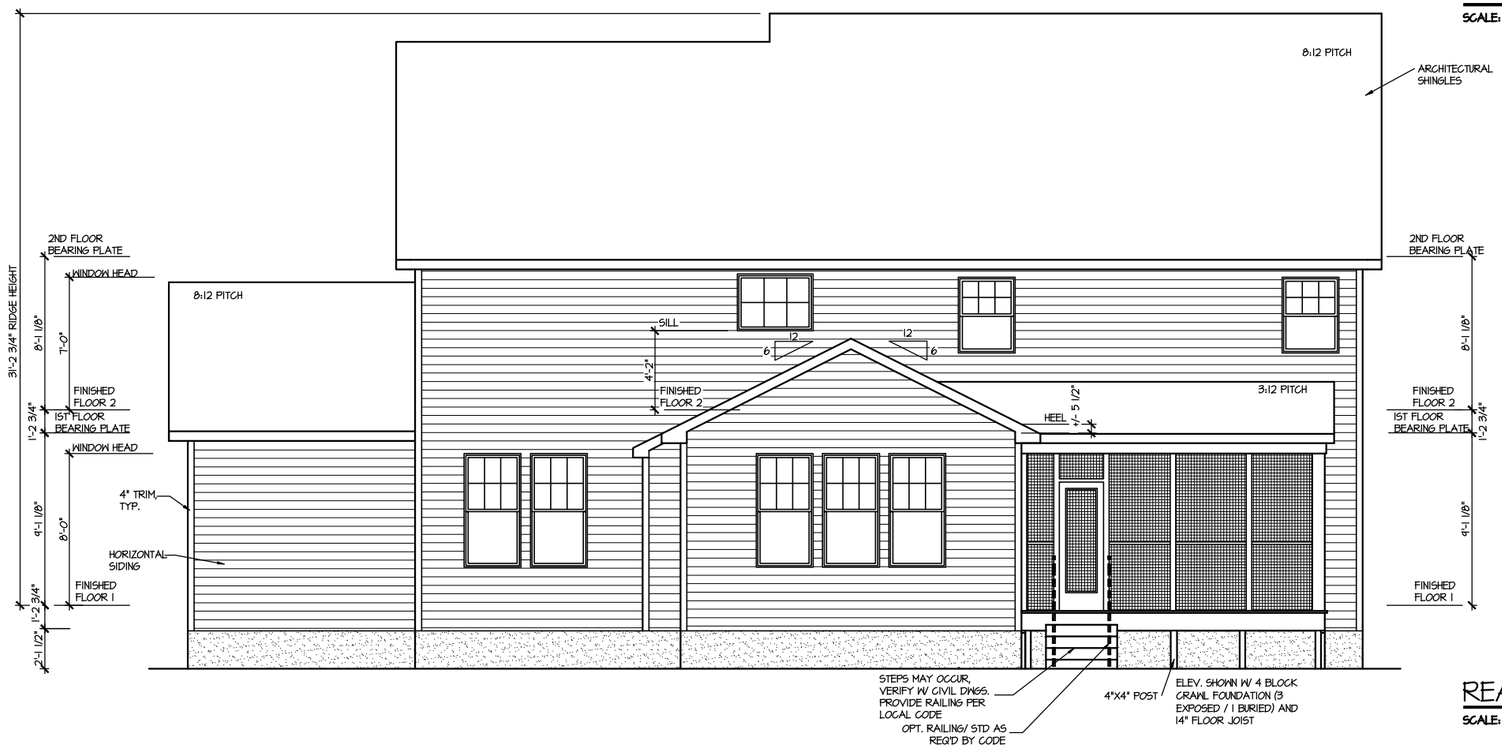

REAR ELEVATION 2

SCALE: 1/8" = 1'-0"

MASTER PLAN INFORMATION	
REVISION	UPDATED DATE
3-RALE	04-30-2025
DATE	
07-31-2024	

DRAWN BY: ITS

DATE: 05/21/2025

PLAN NO. 1635

DRB HOMES

HOUSE NAME: STONEFIELD

DRAWING TITLE: FRONT & REAR ELEVATIONS

SHEET No. A1.1

FILE: Lot 00.0039.dwg DATE: 5/21/2025 11:09 AM

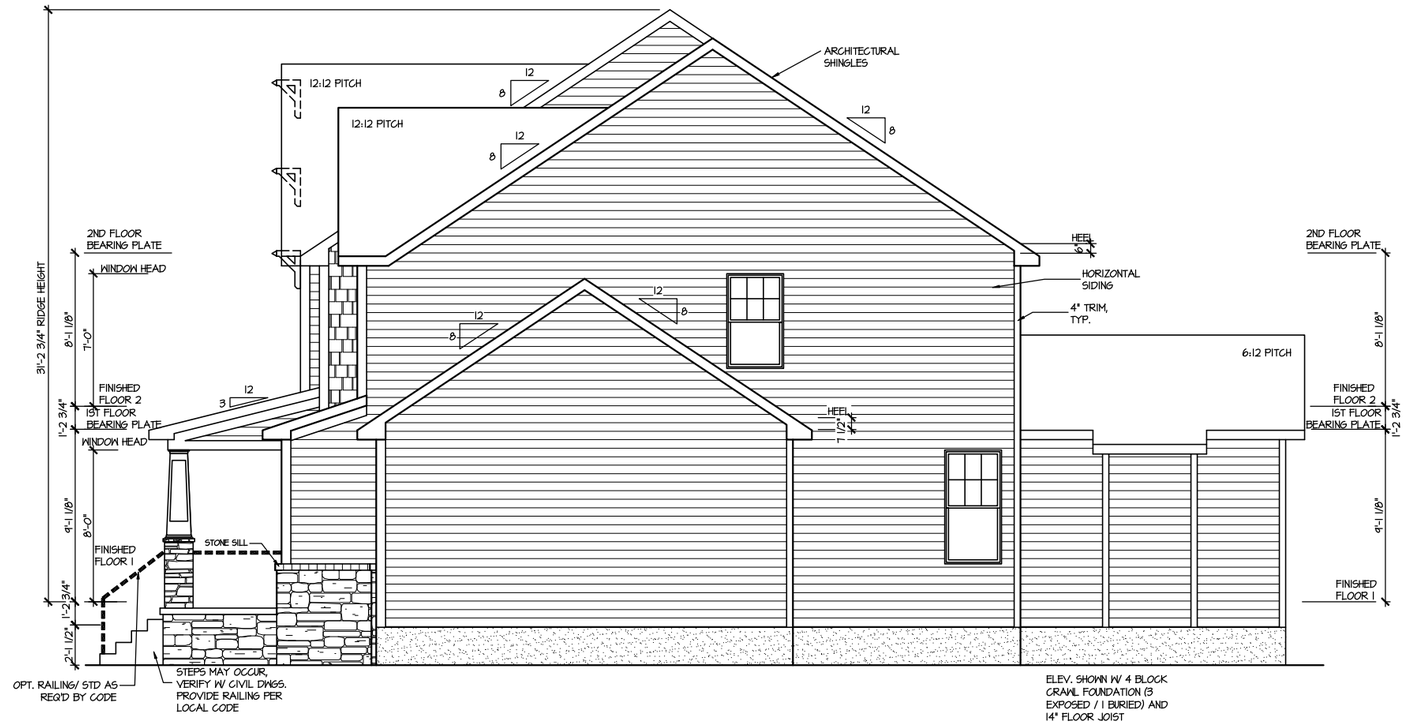

RIGHT ELEVATION 2

SCALE: 1/8" = 1'-0"

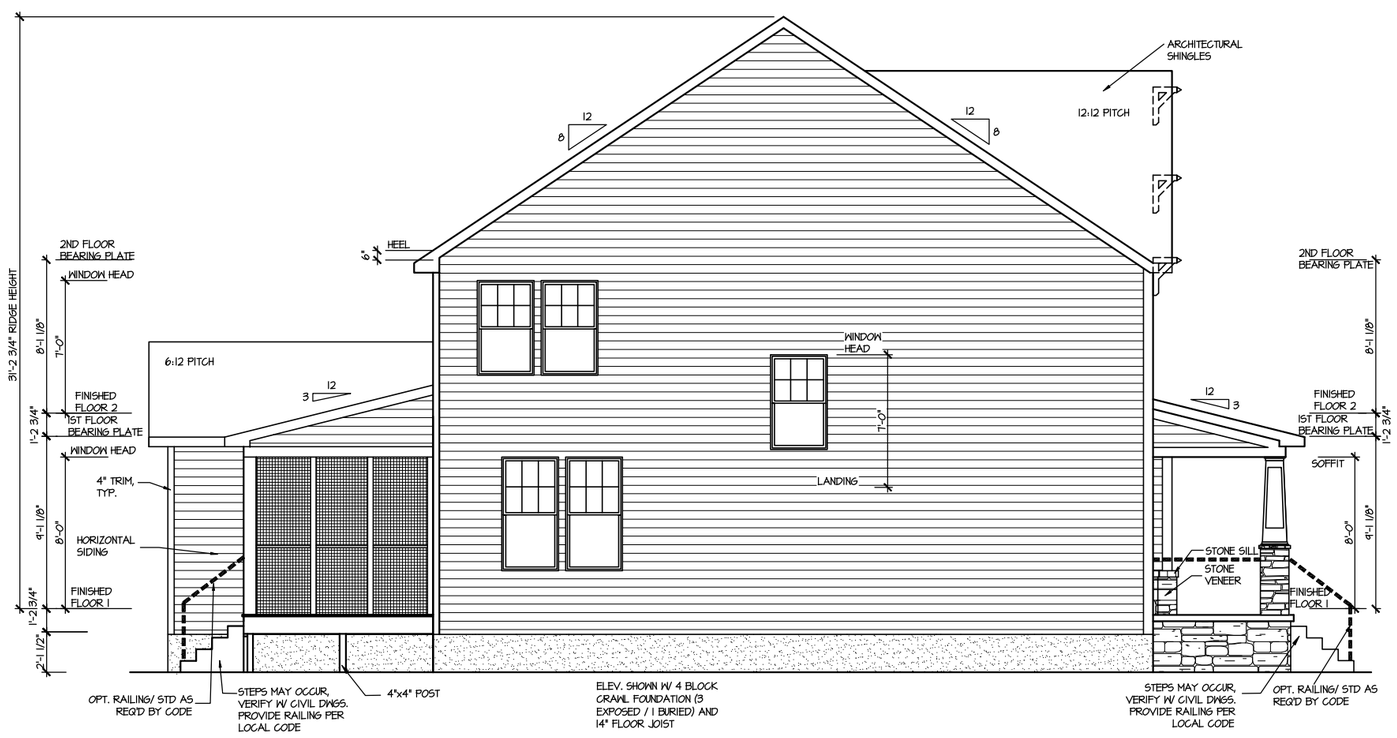

LEFT ELEVATION 2

SCALE: 1/8" = 1'-0"

FILE: Lot 00.0039.dwg DATE: 5/21/2025 11:09 AM

MASTER PLAN INFORMATION		
REVISION	DATE	UPDATED DATE
3-RALE	07-31-2024	04-30-2025

DRAWN BY: ITS

DATE: 05/21/2025

PLAN NO. 1635

DRB HOMES

HOUSE NAME: STONEFIELD

DRAWING TITLE: RIGHT & LEFT ELEVATIONS

SHEET No. A1.2

ATTIC VENT CALCULATION FOR PLAN '2'

UPPER ROOF VENTILATION CALCULATIONS:

ROOF AREA 1 = 1814 SQ. FT.
OVERALL REQUIRED VENTILATION:
1 TO 150 = 12.09 SQ. FT.
1 TO 300 = 6.05 SQ. FT.
50% IN TOP THIRD = 3.02 SQ. FT. (1 TO 300)

NET FREE AREA OF VENTED SOFFIT = 5.7 SQ. IN / LINEAR FT.
NET FREE AREA OF RIDGE VENT = 18 SQ. IN/ LINEAR FT.

LOWER VENTING: (BOTTOM 2/3 RDS)
82 LINEAR FEET OF SOFFIT X 5.7 SQ. IN. = 3.245 SQ. FT.
UPPER VENTING: (TOP 1/3 RD)
24 LINEAR FEET OF RIDGE X 18 SQ. IN = 3 SQ. FT.
3 SQ. FT. AT 50%
(1 TO 300 ALLOWED)

UPPER ROOF VENTILATION CALCULATIONS:

ROOF AREA 2 = 252 SQ. FT.
OVERALL REQUIRED VENTILATION:
1 TO 150 = 1.68 SQ. FT.
1 TO 300 = 0.84 SQ. FT.
50% IN TOP THIRD = 0.42 SQ. FT. (1 TO 300)

NET FREE AREA OF VENTED SOFFIT = 5.7 SQ. IN / LINEAR FT.
NET FREE AREA OF RIDGE VENT = 18 SQ. IN/ LINEAR FT.

LOWER VENTING: (BOTTOM 2/3 RDS)
11 LINEAR FEET OF SOFFIT X 5.7 SQ. IN. = 1.375 SQ. FT.
UPPER VENTING: (TOP 1/3 RD)
4 LINEAR FEET OF RIDGE X 18 SQ. IN = .5 SQ. FT.
(1 TO 300 ALLOWED)

UPPER ROOF VENTILATION CALCULATIONS:

ROOF AREA 3 = 415 SQ. FT.
OVERALL REQUIRED VENTILATION:
1 TO 150 = 0.83 SQ. FT.
1 TO 300 = 0.3811 SQ. FT.
50% IN TOP THIRD = 0.158 SQ. FT. (1 TO 300)

NET FREE AREA OF VENTED SOFFIT = 5.7 SQ. IN / LINEAR FT.
NET FREE AREA OF RIDGE VENT = 18 SQ. IN/ LINEAR FT.

LOWER VENTING: (BOTTOM 2/3 RDS)
23 LINEAR FEET OF SOFFIT X 5.7 SQ. IN. = 0.91 SQ. FT.
UPPER VENTING: (TOP 1/3 RD)
8 LINEAR FEET OF RIDGE X 18 SQ. IN = 1 SQ. FT.
1 SQ. FT. BETWEEN 50%
(1 TO 300 ALLOWED)

UPPER ROOF VENTILATION CALCULATIONS:

ROOF AREA 4 = 145 SQ. FT.
OVERALL REQUIRED VENTILATION:
1 TO 150 = 0.967 SQ. FT.
1 TO 300 = 0.483 SQ. FT.
50% IN TOP THIRD = 0.242 SQ. FT. (1 TO 300)

NET FREE AREA OF VENTED SOFFIT = 5.7 SQ. IN / LINEAR FT.
NET FREE AREA OF RIDGE VENT = 18 SQ. IN/ LINEAR FT.

LOWER VENTING: (BOTTOM 2/3 RDS)
20 LINEAR FEET OF SOFFIT X 5.7 SQ. IN. = 0.791 SQ. FT.
UPPER VENTING: (TOP 1/3 RD)
8 LINEAR FEET OF RIDGE X 18 SQ. IN = 1 SQ. FT.
1 SQ. FT. AT 50%
(1 TO 300 ALLOWED)

UPPER ROOF VENTILATION CALCULATIONS:

ROOF AREA 6 = 234 SQ. FT.
OVERALL REQUIRED VENTILATION:
1 TO 150 = 1.56 SQ. FT.
1 TO 300 = 0.78 SQ. FT.
50% IN TOP THIRD = 0.39 SQ. FT. (1 TO 300)

NET FREE AREA OF VENTED SOFFIT = 5.7 SQ. IN / LINEAR FT.
NET FREE AREA OF RIDGE VENT = 18 SQ. IN/ LINEAR FT.

LOWER VENTING: (BOTTOM 2/3 RDS)
10 LINEAR FEET OF SOFFIT X 5.7 SQ. IN. = 0.396 SQ. FT.
UPPER VENTING: (TOP 1/3 RD)
4 LINEAR FEET OF RIDGE X 18 SQ. IN = 0.5 SQ. FT.
1 SQ. FT. AT 50%
(1 TO 300 ALLOWED)

NOTE: ROOF PLANS SHOWN W/ MIN. REQ'D RIDGE VENT LOCATIONS.
ACTUAL RIDGE VENT LOCATIONS AND QUANTITY PER BUILDER

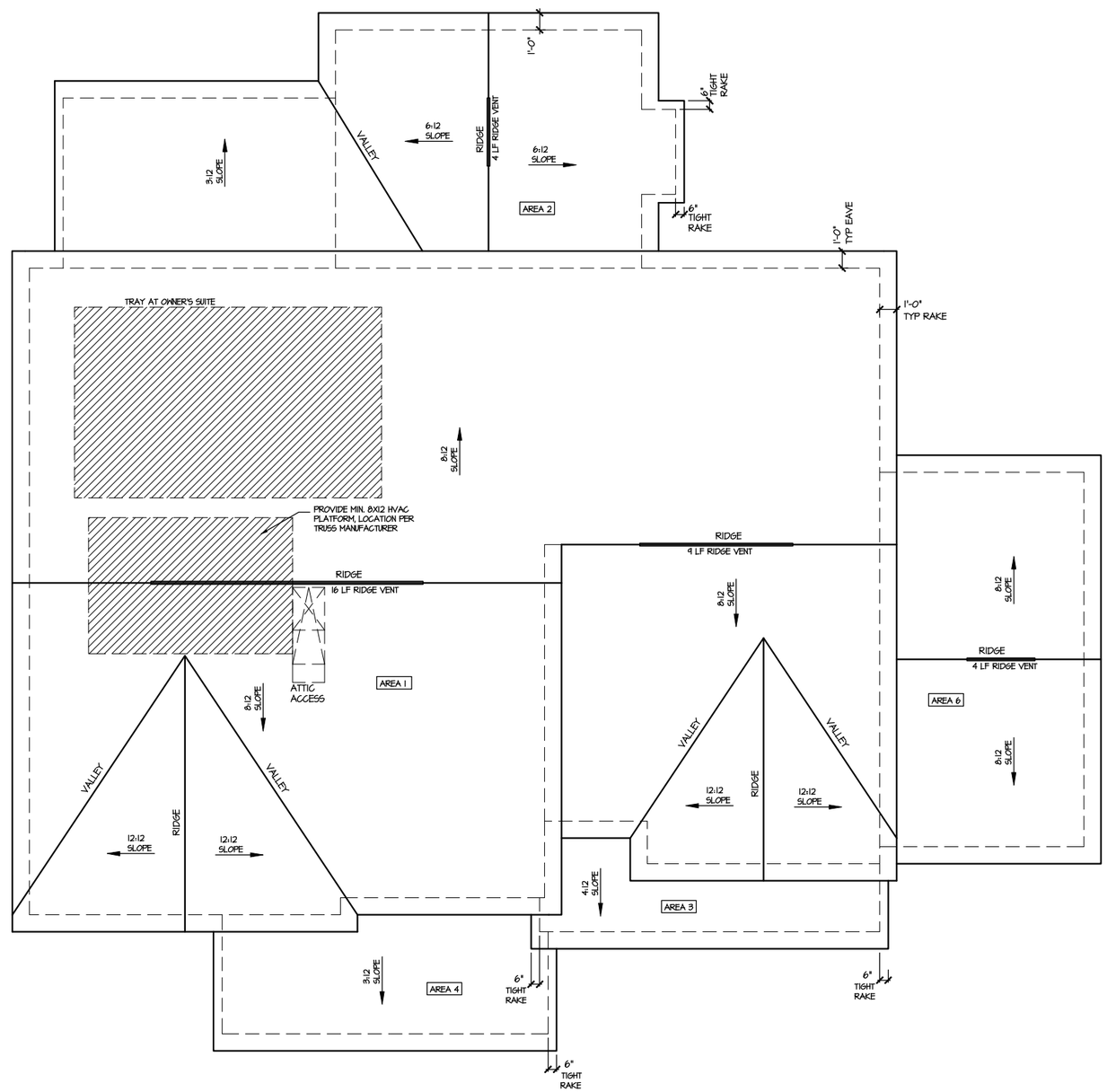

ROOF PLAN ELEV. 2

SCALE: 1/8" = 1'-0"

FILE: Lot 00.0039.dwg DATE: 5/21/2025 11:09 AM

MASTER PLAN INFORMATION	
REVISION	DATE
3-RALE	07-31-2024
UPDATED DATE	
04-30-2025	

DRAWN BY: ITS

DATE: 05/21/2025

PLAN NO. 1635

DRB HOMES

HOUSE NAME: STONEFIELD

DRAWING TITLE ROOF PLAN

SHEET No. A1.3

CRAWL SPACE VENT CALCULATIONS: ELEV 2
CRAWL AREA = 1572 SQ. FT.
OVERALL REQUIRED VENTILATION:
1 SQ. IN. PER 1 SQ. FT. = 1572 SQ. IN.

NET FREE AREA OF VENT = 72 SQ. IN. PER VENT
WITTEN AUTOMATIC VENT OAL-1 OR EQUAL

VENTING REQUIREMENT:
1572 SQ. IN. / 72 SQ. IN. = 21.8 VENTS = 22 VENTS

ONLY VENTS ON THE FRONT ELEVATION ARE SHOWN.
ALL OTHERS TO BE FIELD LOCATED.
VENTS SHALL BE INSTALLED PER R322.2.2 - R322.2.2.1

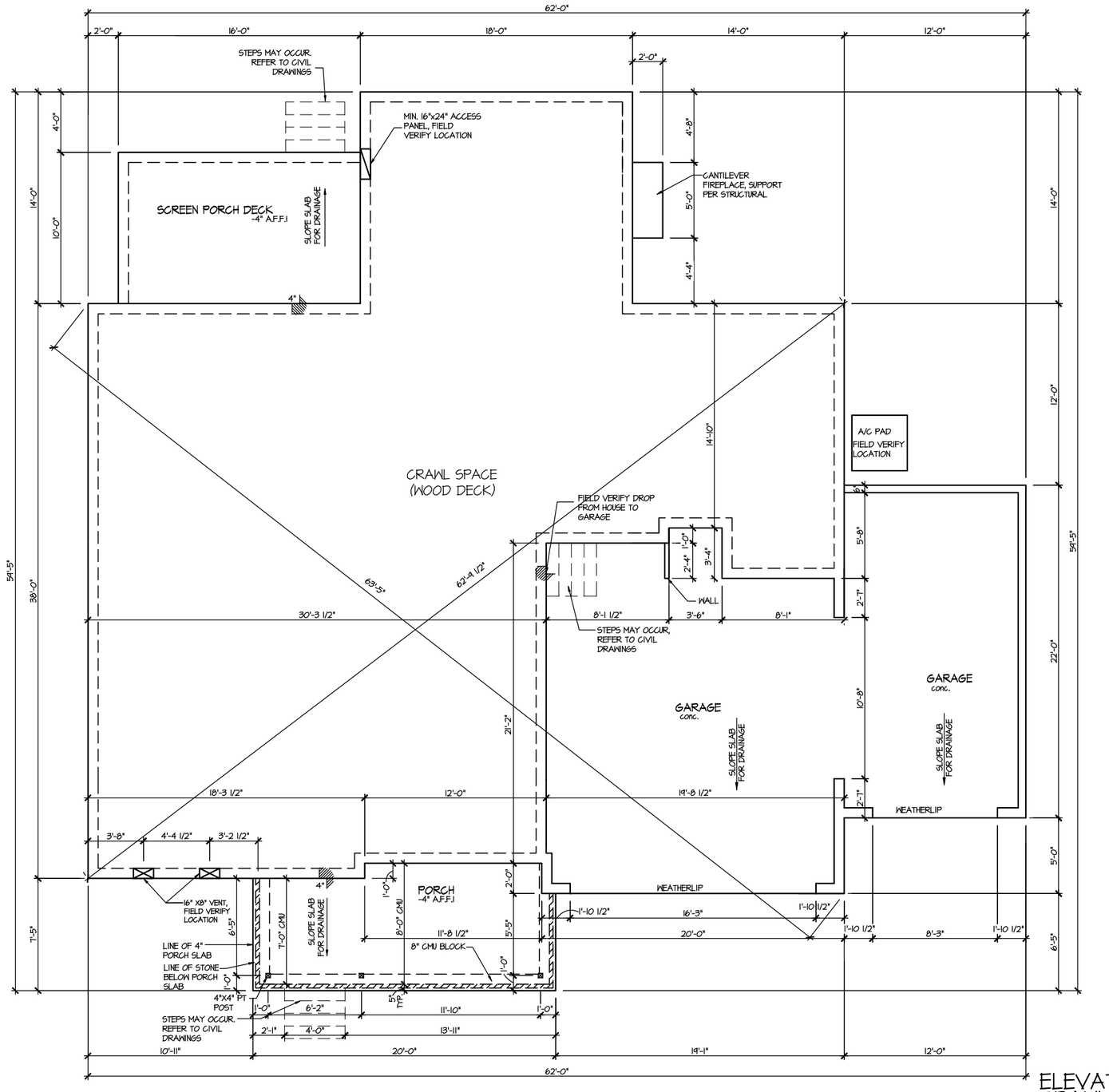

ELEVATION 2
CRAWL SPACE PLAN
SCALE: 1/8" = 1'-0"

MASTER PLAN INFORMATION		
REVISION	DATE	UPDATED DATE
3-RALE	07-31-2024	04-30-2025

DRAWN BY: ITS
DATE: 05/21/2025
PLAN NO. 1635

DRB HOMES

HOUSE NAME: STONEFIELD
DRAWING TITLE: CRAWL SPACE PLAN

SHEET No. A2.1

FILE: Lot 00.0039.dwg DATE: 5/21/2025 11:09 AM

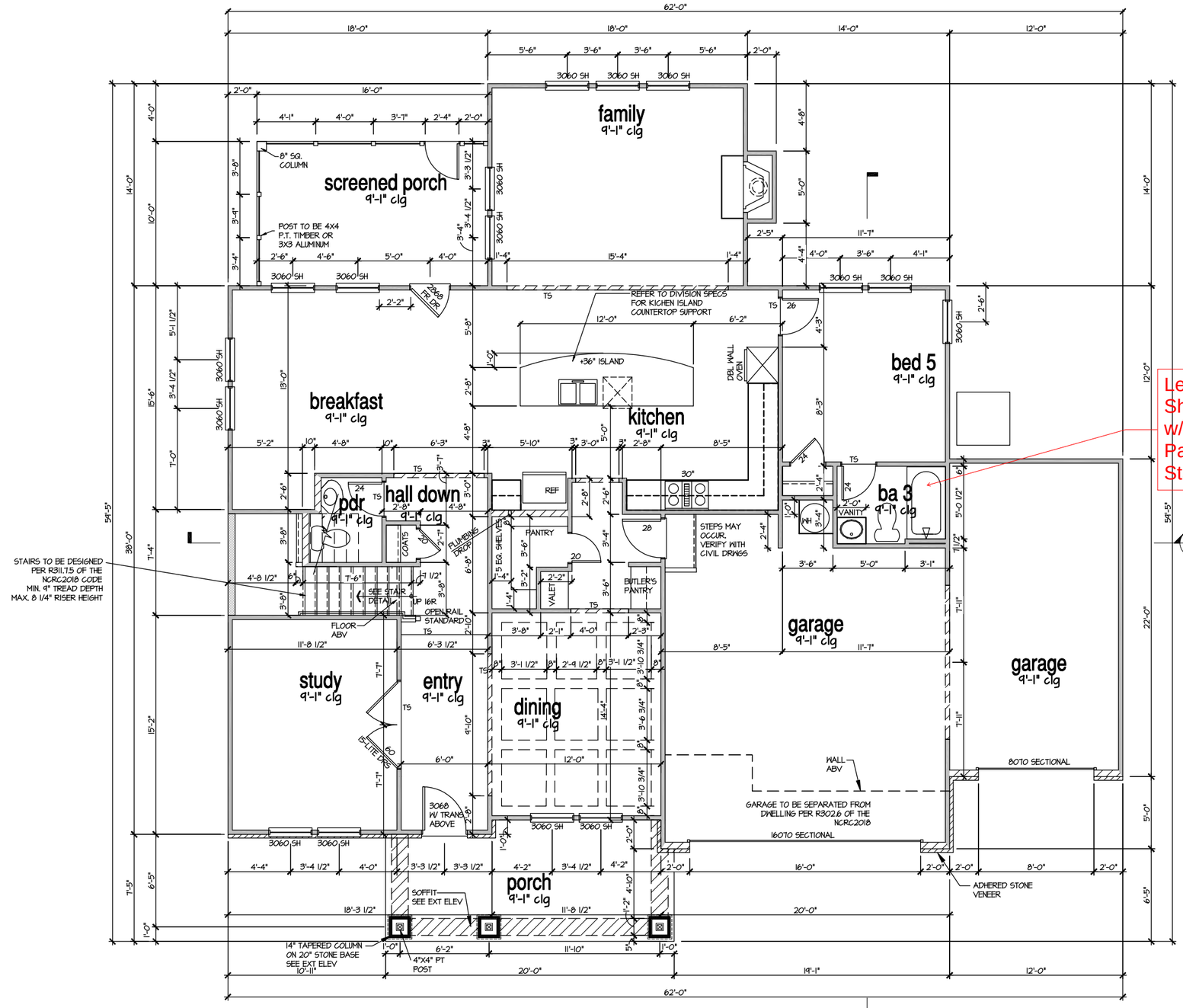

Level 1 Tile Shower w/Fiberglass Pan ILO Standard

ELEVATION 2
FIRST FLOOR PLAN

SCALE: 1/8" = 1'-0"

MASTER PLAN INFORMATION		
REVISION	DATE	UPDATED DATE
3-RALE	07-31-2024	04-30-2025

DRAWN BY: ITS

DATE: 05/21/2025

PLAN NO. 1635

DRB HOMES

HOUSE NAME: STONEFIELD

DRAWING TITLE: FIRST FLOOR PLAN

SHEET No. A3.1

FILE: Lot 00.0039.dwg DATE: 5/21/2025 11:09 AM

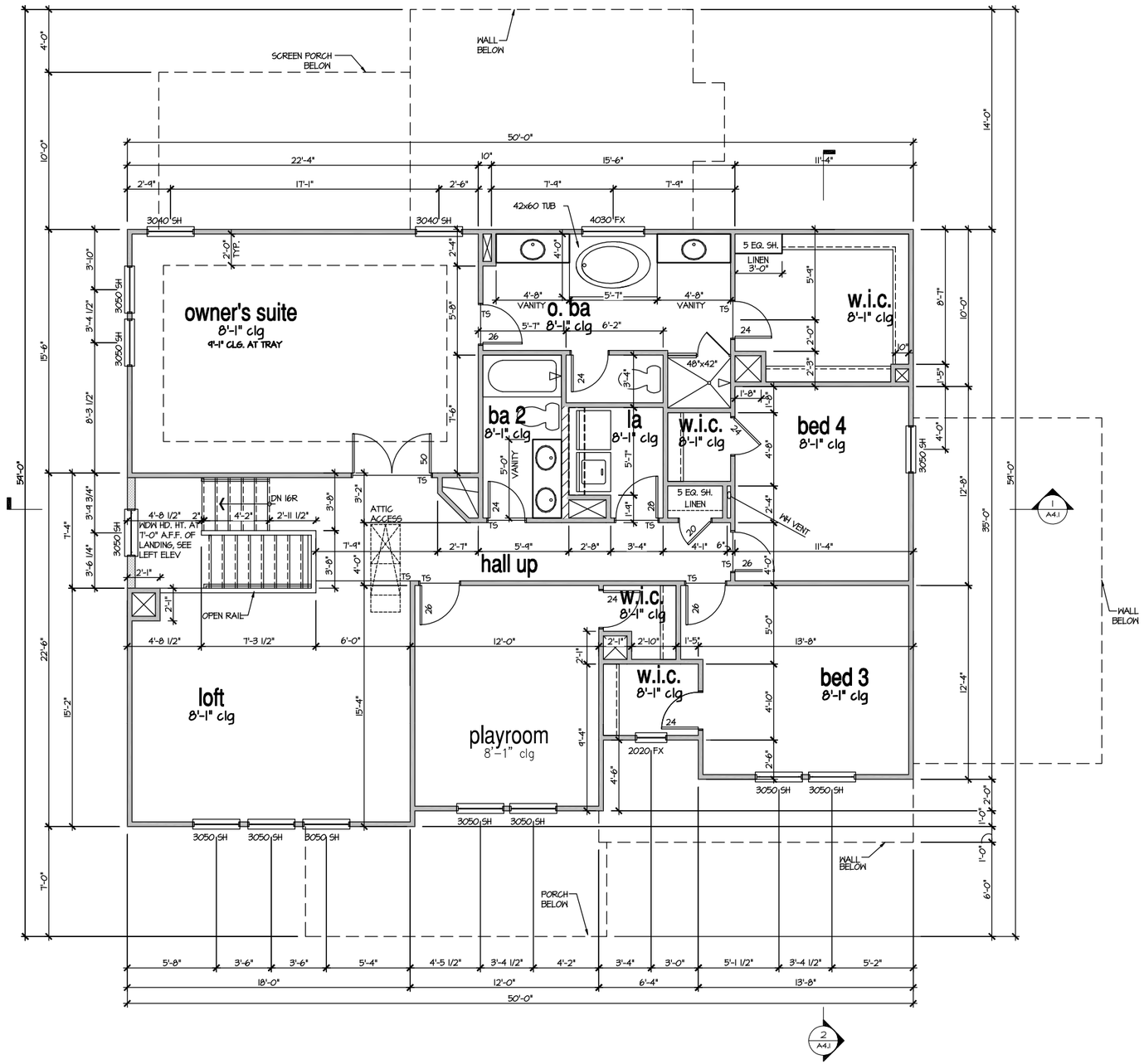

ELEVATION 2
SECOND FLOOR PLAN

SCALE: 1/8" = 1'-0"

MASTER PLAN INFORMATION		
REVISION	DATE	UPDATED DATE
3-RALE	07-31-2024	04-30-2025

DRAWN BY: ITS

DATE: 05/21/2025

PLAN NO. 1635

DRB HOMES

HOUSE NAME: STONEFIELD

DRAWING TITLE: SECOND FLOOR PLAN

SHEET No. A3.2

FILE: Lot 00.0039.dwg DATE: 5/21/2025 11:09 AM

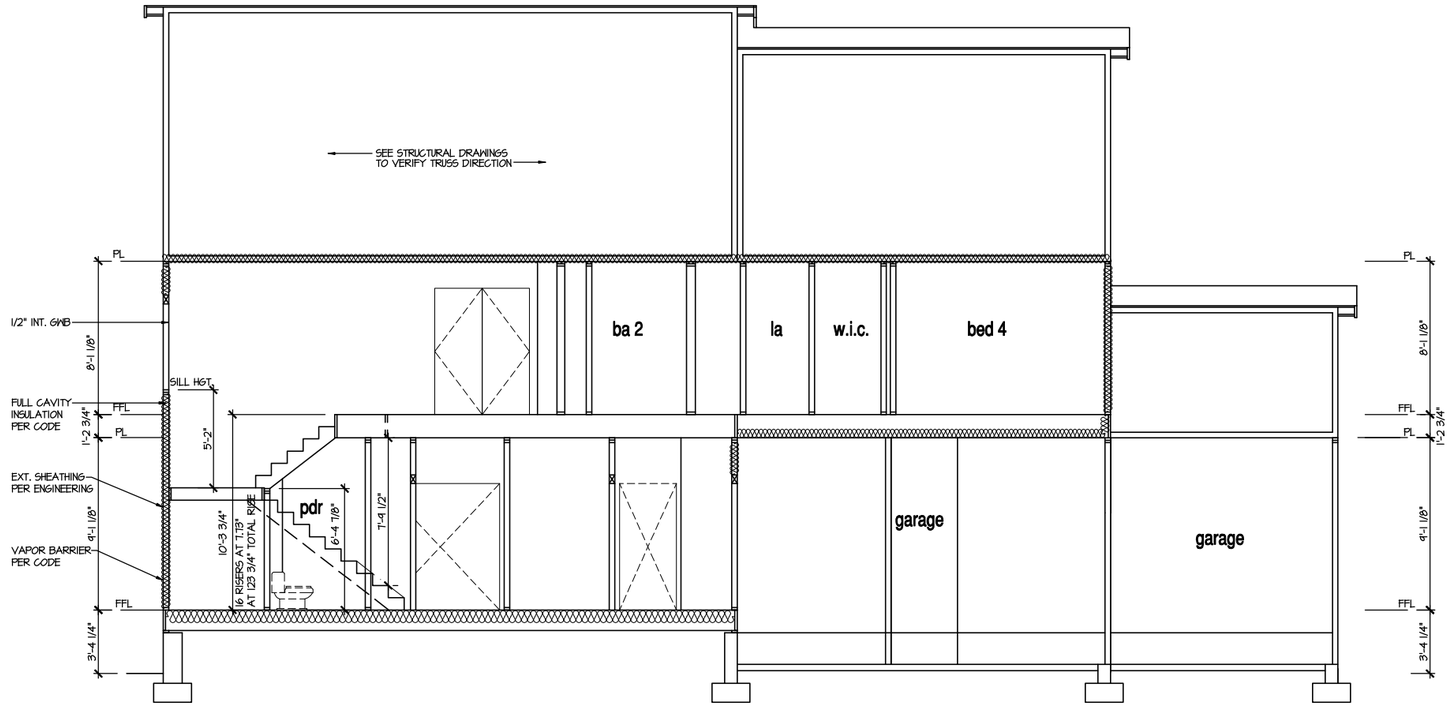

SECTION 1

SCALE: 1/8" = 1'-0"

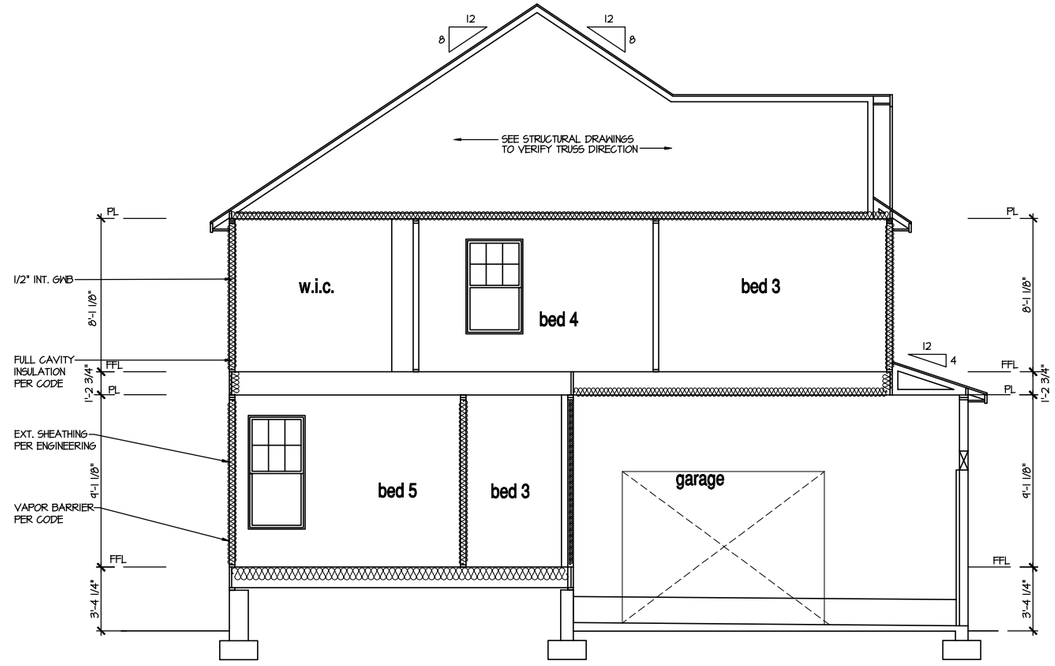

SECTION 2

SCALE: 1/8" = 1'-0"

9'-1" STAIR NOTE:

(USE 14" TJI WITH 3/4" PLYWOOD SUBFLOOR)
15 TREADS AT 10" EACH VERIFY
16 RISERS AT +/- 7.13" = 123 3/4" TOTAL RISE VERIFY

NOTES:

- BUILDING SECTIONS SHOWN HERE DEPICT VOLUMN SPACES WITHIN THE STRUCTURE. REFER TO STRUCTURAL DRAWINGS, TRUSS DRAWINGS, STRUCTURAL DETAILS AND CALCULATIONS BY OTHER FOR ALL STRUCTURAL INFO.
- ROOFING: PITCHED SHINGLE ROOF. REFER TO ROOF PLAN FOR TYPICALS.
- WOOD FLOORS: FLOOR SHEATHING OVER FLOOR JOIST. REFER TO STRUCTURAL AND TRUSS DRAWINGS BY OTHERS.
- INSULATION:

EXTERIOR WALLS:	R-13 BATTS MINIMUM. VERIFY
CEILING WITH ATTIC ABOVE:	R-38 BATTS MINIMUM. VERIFY
FLOOR OVER GARAGE:	R-19 BATTS MINIMUM. VERIFY
ATTIC KNEEWALL:	R-19 BATTS MINIMUM. VERIFY

PER STATE RESIDENTIAL CODE COMPLIANCE METHOD TO BE DETERMINED BY BUILDER.

FILE: Lot 00.0039.dwg DATE: 5/21/2025 11:09 AM

MASTER PLAN INFORMATION

REVISION	DATE	UPDATED DATE
3-RALE	07-31-2024	04-30-2025

DRAWN BY: ITS

DATE: 05/21/2025

PLAN NO. 1635

DRB HOMES

HOUSE NAME: STONEFIELD

DRAWING TITLE: BUILDING SECTION

SHEET No. A4.1

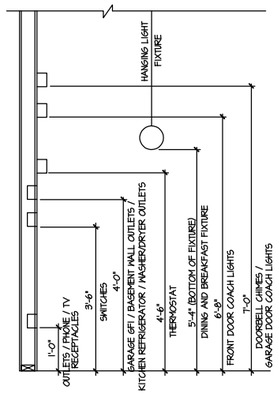

STANDARD ELECTRICAL BOX HEIGHTS

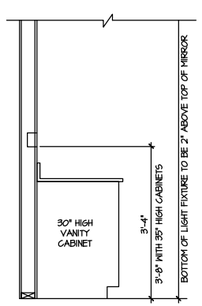

SWITCH AND RECEPTACLE BOXES OVER BATH CABINETS

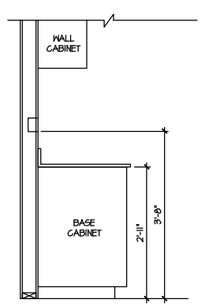

SWITCH AND RECEPTACLE BOXES OVER KITCHEN CABINETS

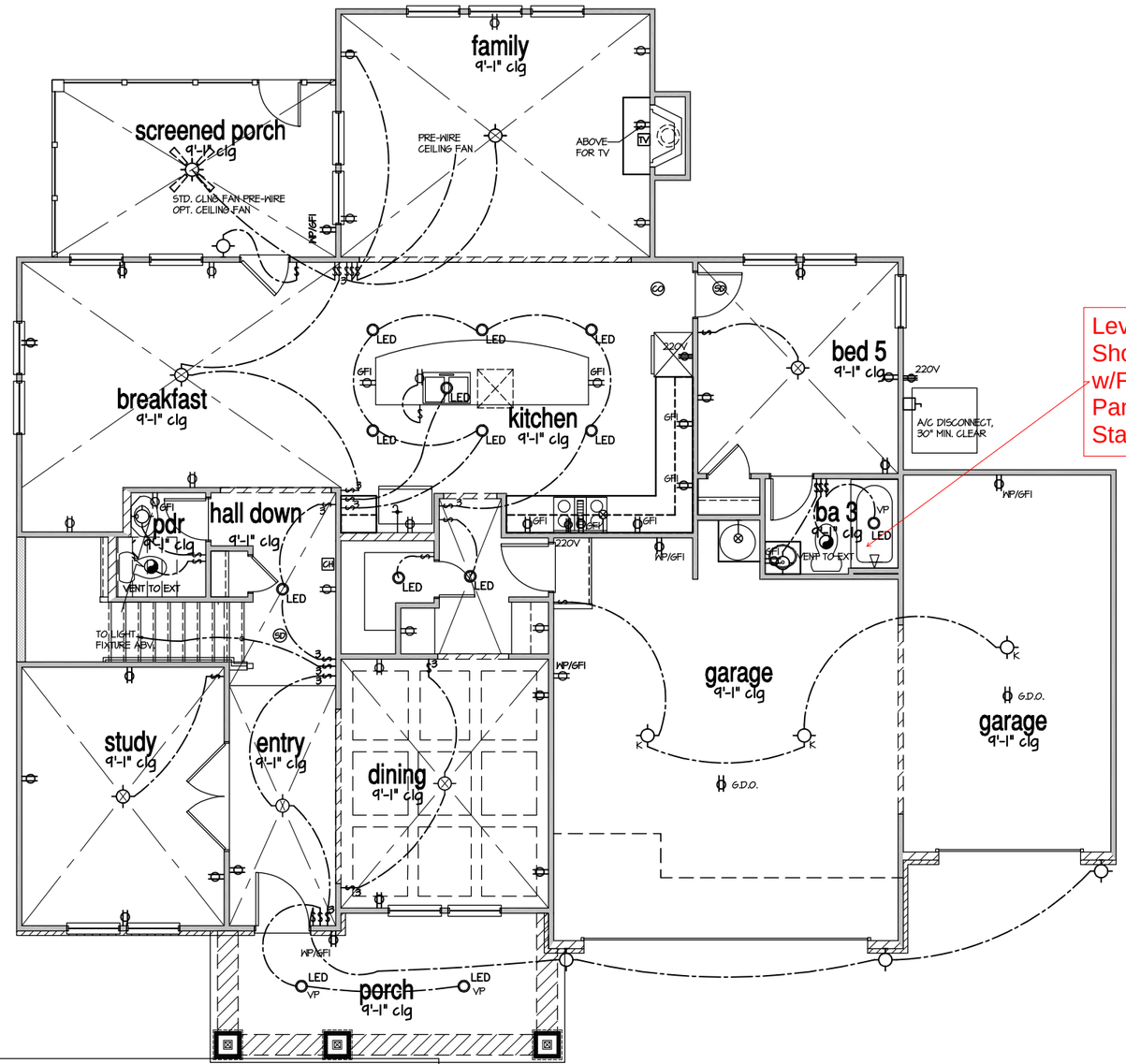

Level 1 Tile Shower w/Fiberglass Pan ILO Standard

NOTES:

- PROVIDE AND INSTALL LOCALLY CERTIFIED SMOKE DETECTORS AND CO2 DETECTORS AS REQUIRED BY NATIONAL FIRE PROTECTION ASSOCIATION (NFPA) AND MEETING THE REQUIREMENTS OF ALL GOVERNING CODES.
- PROVIDE AND INSTALL GROUND FAULT CIRCUIT-INTERRUPTERS (GFI) AS REQUIRED BY NATIONAL ELECTRICAL COD (NEC) AND MEETING THE REQUIREMENTS OF ALL GOVERNING CODES.
- ELECTRICAL CONTRACTOR TO PROVIDE REQUIRED DIRECT HOOK-UPS/CUTOFFS.
- HVAC CONTRACTOR TO VERIFY THERMOSTAT LOCATIONS.
- ALL ELECTRICAL AND MECHANICAL EQUIPMENT (FURNACES, A/C UNITS, ELECTRICAL PANELS, SANITARY SUMP PITS, DRAIN TILE SUMP, AND WATER HEATERS) ARE SUBJECT TO RELOCATION DUE TO FIELD CONDITIONS.
- PROVIDE POWER, LIGHT AND SWITCH AS REQUIRED FOR ATTIC FURNACE PER CODE AND MANUFACTURER'S WRITTEN INSTRUCTIONS.
- CLOSET LIGHTS TO BE FLOURESCENT FIXTURES FOR NO 4 INCANDESCENT CLG. MOUNTED FIXTURES FOR ALL OTHER AREAS.

LEGEND:

	AFCI DUPLEX OUTLET		CEILING MOUNTED INCANDESCENT LIGHT FIXTURE		CHIMES		CEILING FAN (PROVIDE ADEQUATE SUPPORT)
WP/GFI	HEATHERPROOF GFI AFCI DUPLEX OUTLET	K	KEYLESS LIGHT		PUSHBUTTON SWITCH		CEILING FAN WITH INCANDESCENT LIGHT FIXTURE (PROVIDE ADEQUATE SUPPORT)
GFI	GROUND-FAULT CIRCUIT-INTERRUPTER AFCI DUPLEX OUTLET		WALL MOUNTED INCANDESCENT LIGHT FIXTURE	SD	110V SMOKE DETECTOR W/ BATTERY BACKUP		
	HALF-SWITCHED AFCI DUPLEX OUTLET		RECESSED LIGHT FIXTURE	CO	CO2 DETECTOR		GAS SUPPLY WITH VALVE
220V	220 VOLT AFCI OUTLET	LED	LED SURFACE MOUNTED	T	THERMOSTAT	HB	HOSE BIBB
J	REINFORCED JUNCTION BOX		EXHAUST FAN (VENT TO EXTERIOR)	PH	TELEPHONE	GN	1/4" WATER STUB OUT
S	WALL SWITCH		EXHAUST FAN/LIGHT COMBINATION (VENT TO EXTERIOR)	TV	TELEVISION		
S3	THREE-WAY SWITCH		TECH HUB SYSTEM		ELECTRIC METER		
S4	FOUR-WAY SWITCH				ELECTRIC PANEL		
	LED STRIP FIXTURE				DISCONNECT SWITCH		

ELECTRICAL PLAN
FIRST FLOOR - ELEV. 2

SCALE: 1/8" = 1'-0"

MASTER PLAN INFORMATION		
REVISION	DATE	UPDATED DATE
3-RALE	07-31-2024	04-30-2025

DRAWN BY: ITS

DATE: 05/21/2025

PLAN NO. 1635

DRB HOMES

HOUSE NAME: STONEFIELD

DRAWING TITLE: FIRST FLOOR ELECTRICAL

SHEET No. E1.1

FILE: Lot 00.0039.dwg DATE: 5/21/2025 11:09 AM

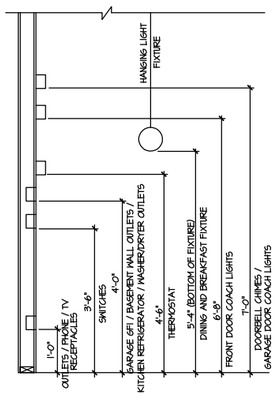

STANDARD ELECTRICAL BOX HEIGHTS

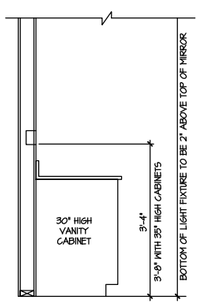

SWITCH AND RECEPTACLE BOXES OVER BATH CABINETS

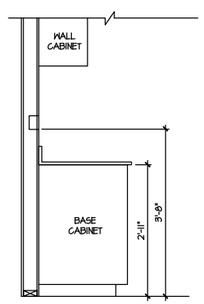

SWITCH AND RECEPTACLE BOXES OVER KITCHEN CABINETS

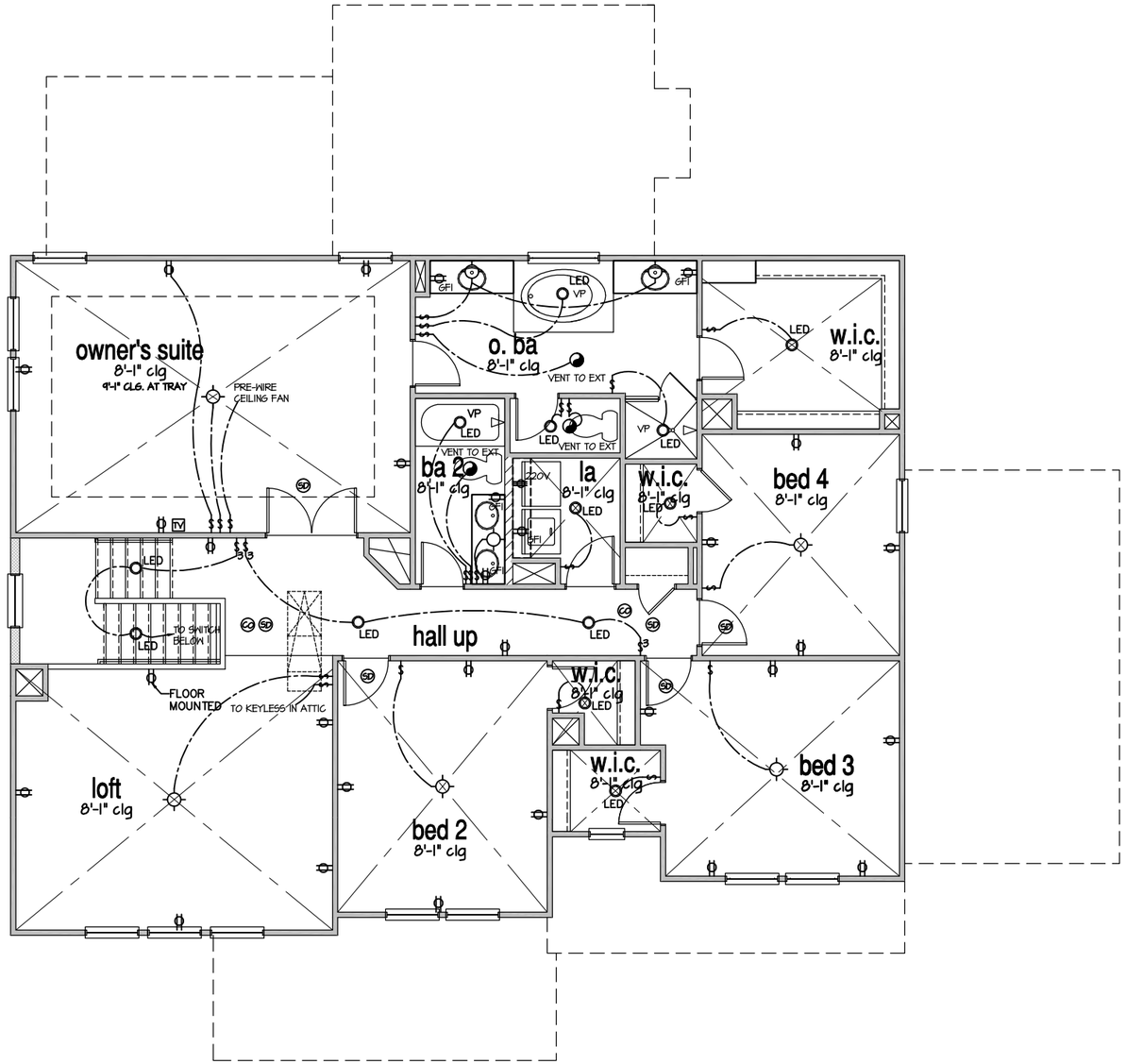

NOTES:

- PROVIDE AND INSTALL LOCALLY CERTIFIED SMOKE DETECTORS AND CO2 DETECTORS AS REQUIRED BY NATIONAL FIRE PROTECTION ASSOCIATION (NFPA) AND MEETING THE REQUIREMENTS OF ALL GOVERNING CODES.
- PROVIDE AND INSTALL GROUND FAULT CIRCUIT-INTERRUPTERS (GFI) AS REQUIRED BY NATIONAL ELECTRICAL CODE (NEC) AND MEETING THE REQUIREMENTS OF ALL GOVERNING CODES.
- ELECTRICAL CONTRACTOR TO PROVIDE REQUIRED DIRECT HOOK-UPS/CUTOFFS.
- HVAC CONTRACTOR TO VERIFY THERMOSTAT LOCATIONS.
- ALL ELECTRICAL AND MECHANICAL EQUIPMENT (FURNACES, A/C UNITS, ELECTRICAL PANELS, SANITARY SUMP PITS, DRAIN TILE SUMP, AND WATER HEATERS) ARE SUBJECT TO RELOCATION DUE TO FIELD CONDITIONS.
- PROVIDE POWER, LIGHT AND SWITCH AS REQUIRED FOR ATTIC FURNACE PER CODE AND MANUFACTURER'S WRITTEN INSTRUCTIONS.
- CLOSET LIGHTS TO BE FLOURESCENT FIXTURES FOR NO 4 INCANDESCENT CLG. MOUNTED FIXTURES FOR ALL OTHER AREAS.

LEGEND:

	AFCI DUPLEX OUTLET		CEILING MOUNTED INCANDESCENT LIGHT FIXTURE		CHIMES		CEILING FAN (PROVIDE ADEQUATE SUPPORT)
WP/GFI	WEATHERPROOF GFI AFCI DUPLEX OUTLET	K	KEYLESS LIGHT		PUSHBUTTON SWITCH		CEILING FAN WITH INCANDESCENT LIGHT FIXTURE (PROVIDE ADEQUATE SUPPORT)
GFI	GROUND-FAULT CIRCUIT-INTERRUPTER AFCI DUPLEX OUTLET		WALL MOUNTED INCANDESCENT LIGHT FIXTURE	SD	110V SMOKE DETECTOR W/ BATTERY BACKUP		
	HALF-SWITCHED AFCI DUPLEX OUTLET		RECESSED LIGHT FIXTURE	CO	CO2 DETECTOR		GAS SUPPLY WITH VALVE
220V	220 VOLT AFCI OUTLET	LED	LED SURFACE MOUNTED	T	THERMOSTAT	HB	HOSE BIBB
	REINFORCED JUNCTION BOX		EXHAUST FAN (VENT TO EXTERIOR)	PH	TELEPHONE	CW	1/4" WATER STUB OUT
	WALL SWITCH		EXHAUST FAN/LIGHT COMBINATION (VENT TO EXTERIOR)	TV	TELEVISION		
3	THREE-WAY SWITCH		TECH HUB SYSTEM		ELECTRIC METER		
4	FOUR-WAY SWITCH				ELECTRIC PANEL		
	LED STRIP FIXTURE				DISCONNECT SWITCH		

ELECTRICAL PLAN
SECOND FLOOR - ELEV. 2

SCALE: 1/8" = 1'-0"

MASTER PLAN INFORMATION		
REVISION	DATE	UPDATED DATE
3-RALE	07-31-2024	04-30-2025

DRAWN BY: ITS
DATE: 05/21/2025
PLAN NO. 1635

DREAM HOMES

HOUSE NAME: STONEFIELD
DRAWING TITLE: SECOND FLOOR ELECTRICAL

SHEET No. E1.2

FILE: Lot 00.0039.dwg DATE: 5/21/2025 11:09 AM

ALL DIMENSIONS
ARE TO FRAMING

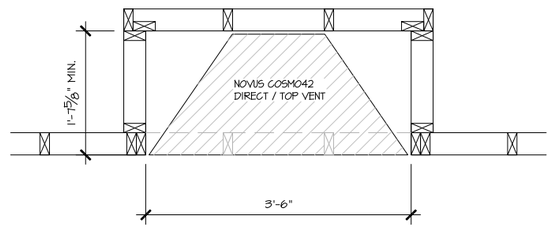

PARTIAL PLAN
NOVUS COSMO42

SCALE: 1/2" = 1'-0"

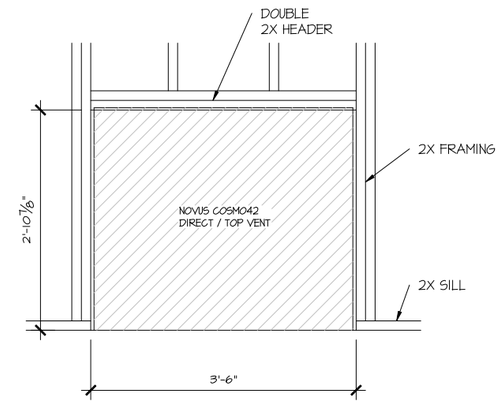

PARTIAL ELEVATION
NOVUS COSMO42

SCALE: 1/2" = 1'-0"

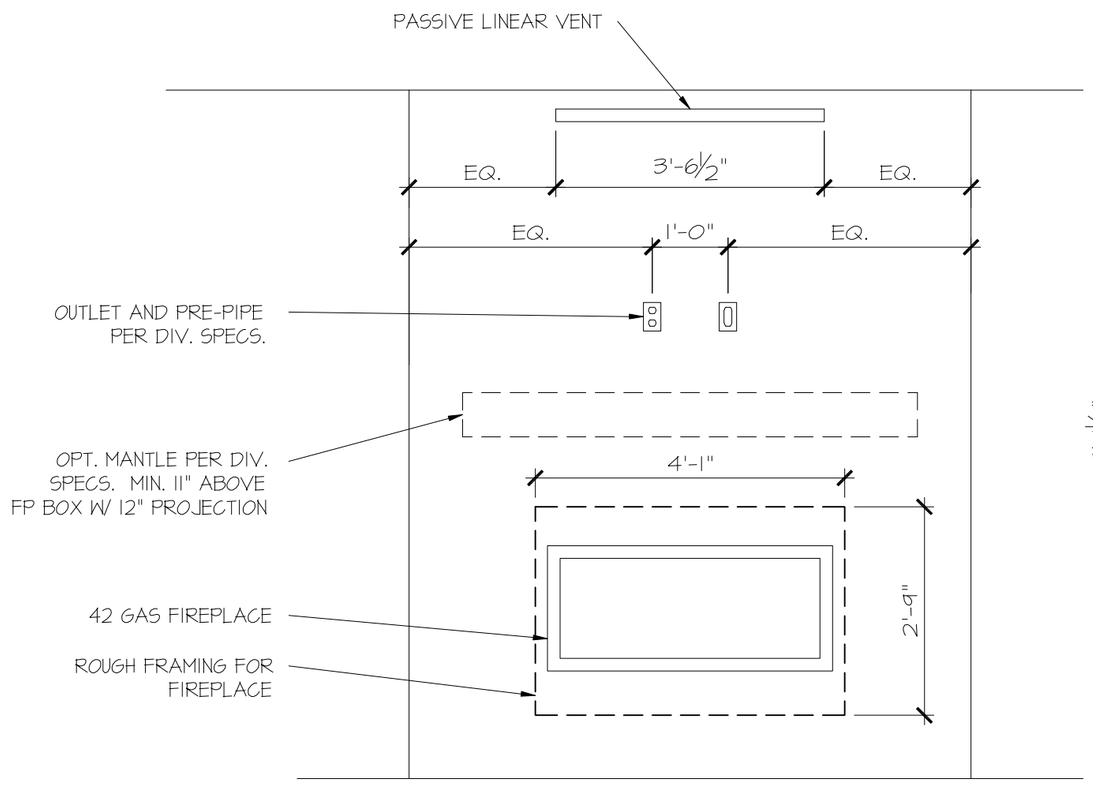

PARTIAL ELEVATION
NOVUS COSMO42

SCALE: 1/2" = 1'-0"

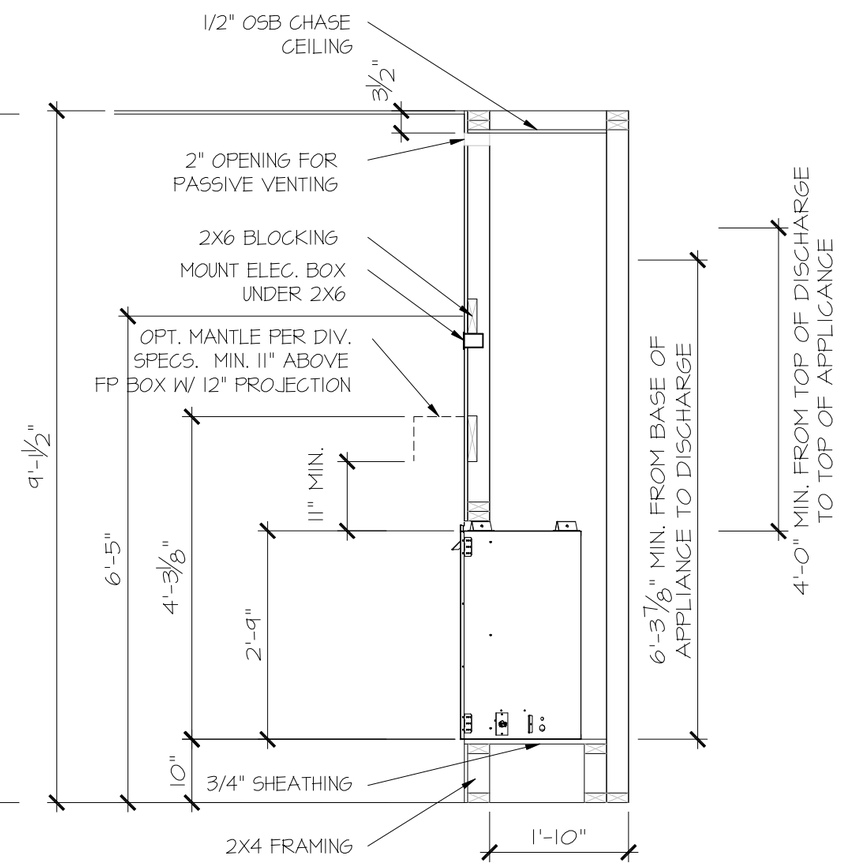

PARTIAL SECTION
NOVUS COSMO42

SCALE: 1/2" = 1'-0"

CONSULTANT LOGO

SEAL

DRAWN BY:	L. BEAVERS
DATE:	11-8-23
PLAN NO.	N/A
11 X 17 SCALE	
24 X 36 SCALE	

DRB HOMES

HOUSE NAME: RALE FIREPLACE DETAILS

DRAWING TITLE: RALE FIREPLACE DETAIL INTERIOR GAS UNITS

SHEET No. FP1.1

FILE: RALE FIREPLACE DETAILS 11-8-23.dwg DATE: 5/27/2022 10:35 AM

GENERAL STRUCTURAL NOTES

FOUNDATION

- DESIGN IS BASED ON 2018 NORTH CAROLINA STATE BUILDING CODE: RESIDENTIAL CODE.
- FOOTING DESIGN - 2,000 PSF ALLOWABLE SOIL BEARING PRESSURE IS ASSUMED. BUILDER/CONTRACTOR MUST VERIFY.
- FASTEN 2x4/6 SILL PLATES TO FND WITH A MINIMUM OF 2 ANCHORS PER PLATE, 12" MAX. FROM PLATE ENDS - UTILIZING:
  - 1/2" DIA. ANCHOR BOLTS @ 6'-0" O.C., 7" MIN. EMBEDMENT (CONC), 15" MIN. EMBEDMENT (CMU)
  - SIMPSON MASA ANCHOR STRAPS @ 6'-0" O.C. (CONC)
  - SIMPSON MAB23 ANCHOR STRAPS @ 2'-8" O.C. (CMU)

  (REFER TO DETAILS FOR 10' TALL WALL ANCHOR REQUIREMENTS)
- ALL LUMBER EXPOSED TO WEATHER OR IN CONTACT W/ CONCRETE OR CMU SHALL BE PRESERVATIVE TREATED SOUTHERN PINE #2.
- BUILDER TO VERIFY CORROSION-RESISTANCE COMPATIBILITY OF HARDWARE & FASTENERS IN CONTACT w/ PRESERVATIVE-TREATED WOOD. CONTACT LUMBER & HARDWARE SUPPLIERS TO COORD.
- BASEMENT INTERIOR BEARING WALLS & EXTERIOR WALK-OUT BASEMENT WALLS SHALL BE 2x6 @ 16" O.C. SPF OR SYP, "STUD" GRADE OR BETTER.
- CONCRETE DESIGN BASED ON ACI 318. CONCRETE SHALL ATTAIN THE FOLLOWING MIN. COMPRESSIVE STRENGTHS IN 28 DAYS, U.N.O.:
  - f'c = 4,000 psi: ..... FOUNDATION WALLS
    2,500 psi: ..... FOOTINGS & INTERIOR SLABS ON GRADE
    3,000 psi: ..... GARAGE & EXTERIOR SLABS ON GRADE
  - fy = 60,000 psi
- BASEMENT FOUNDATION WALL DESIGN BASED ON:
  - 9' OR 10' HEIGHT (AS NOTED ON PLANS)
    - TALLER WALLS MUST BE ENGINEERED.
  - NOMINAL WIDTH (9 1/2" FOR 10" THICK WALL).
- BASEMENT WALL DESIGN IS BASED ON 60 PCF BACKFILL SOIL TYPE CLASSIFICATIONS (SC, ML-CL, OR CL).
- BASEMENT WALLS SHALL BE BRACED, PRIOR TO BACKFILLING, BY ADEQUATE TEMPORARY BRACING OR INSTALL 1st FLOOR DECK.
- PROVIDE (2) #5 BARS AROUND ALL SIDES OF OPENINGS IN CONCRETE BSMT. FND. WALL WITH 2" CLEAR. REINFORCEMENT SHALL EXTEND 12" PAST CORNER OF OPENING IN ALL DIRECTIONS.
  - FOR OPENINGS UP TO 36", PROVIDE MINIMUM 10" CONCRETE DEPTH OVER OPENING OR (3)2x10 w/ (2)2x6 JACK STUDS, U.N.O.
  - LARGER OPENINGS SHALL BE PER PLAN.
- ALL CONCRETE EXPOSED TO THE WEATHER SHALL NOT HAVE LESS THAN 5% OR MORE THAN 7% AIR ENTRAINMENT.
- ALL FOOTINGS SHALL BEAR AT LEAST 12" BELOW FINISH GRADE.
- FOOTINGS AND SLABS ON GRADE SHALL BEAR ON VIRGIN SOIL OR 95% COMPACTED FILL.
- PROVIDE CONTROL JOINTS AT ALL INSIDE CORNERS OF SLAB EDGES, AND OTHER LOCATIONS WHERE SLAB CRACKS ARE LIKELY TO DEVELOP.
  - JOINTS SHALL BE LOCATED @ 10'-0" O.C. (RECOMMENDED) OR 15'-0" O.C. (MAXIMUM)
  - JOINT GRID PATTERN SHALL BE AS CLOSE TO SQUARES AS POSSIBLE (1:1 RATIO), WITH A MAXIMUM OF 1:1.5 RATIO
  - CONTROL JOINTS SHALL NOT BE INSTALLED IN STRUCTURAL SLABS
- CONCRETE MASONRY UNITS (CMU) SHALL BE ASTM C90 WITH A MIN. COMPRESSIVE STRENGTH OF 1900 psi (F'm=1500 psi). MORTAR SHALL BE ASTM C270, TYPE S. CMU DESIGN PER ACI 530 & 530.1.
- CMU FOUNDATION WALLS SHALL HAVE "DUR-O-WALL" HORIZONTAL JOINT REINFORCEMENT (OR EQUAL) - 9 GA. MINIMUM @ 16" O.C.
- PROVIDE 2x8 x 16" LONG P.T. PLATE ON TOP OF ALL CRAWL SPACE PIERS. ALL PIERS SHALL BE GROUTED SOLID.
- PROVIDE 2x6 P.T. PLATE ON INTERIOR CRAWL SPACE WALLS, FASTENED PER ANCHORAGE SPECIFICATION NOTED ABOVE.
- DIMENSIONS BY OTHERS, BUILDER TO VERIFY.
- BUILDER TO VERIFY THAT MODEL HAS BEEN ADEQUATELY TREATED BY A LICENSED AND BONDED PEST CONTROL COMPANY FOR SUBTERRANEAN TERMITES. METHOD AND TYPE OF TREATMENT TO BE DETERMINED BY PEST CONTROL COMPANY.

GENERAL STRUCTURAL NOTES

- DESIGN IS BASED ON 2018 NORTH CAROLINA STATE BUILDING CODE: RESIDENTIAL CODE.
- WOOD FRAME ENGINEERING IS BASED ON NDS, "NATIONAL DESIGN SPECIFICATION FOR WOOD CONSTRUCTION" - LATEST EDITION.
- DESIGN LOADS:

  ROOF DEAD = 7 PSF T.C., 10 PSF B.C.
  LIVE = 16 PSF
  LOAD DURATION FACTOR = 1.25

  FLOOR LIVE = 40 PSF (30 PSF @ SLEEPING AREAS)
  DEAD = 10 PSF (I-JOISTS & SOLID SAWN)
  10 PSF T.C., 5 PSF B.C. (TRUSSES)
  (ADD'L 10 PSF @ TILE)

  LATERAL 120 MPH, EXPOSURE B. SEISMIC A/B.

  SOIL 2,000 PSF ASSUMED ALLOWABLE BEARING PRESSURE (TO BE VERIFIED BY BUILDER)

GENERAL FRAMING

- ALL TYP. NAIL FASTENER REQUIREMENTS ARE NOTED IN STANDARD CONNECTIONS TABLE OR ON PLANS. ALL NAILS SPECIFIED ARE MIN DIAMETER AND LENGTH REQUIRED FOR CONNECTION. ALL HANGER NAILS SHALL BE INSTALLED PER MANUFACTURER'S REQUIREMENTS FOR MAX CHARTED CAPACITY. NOTE: HANGERS USE COMMON NAIL DIAMETERS NOT TYPICAL FRAMING GUN NAILS.
- REFER TO FASTENING SCHEDULE TABLE R602.3(1) FOR ALL CONNECTIONS, TYP. U.N.O.
- EXT. & INT. BRG WALLS SHALL BE 2x4 OR 2x6 (AS SHOWN ON PLANS) @ 16" O.C. SPF OR SYP "STUD" GRADE LUMBER, OR BETTER, U.N.O.
  - WALLS OVER 12' TALL SHALL BE PER PLAN.
- ALL HEADERS, BEAMS & OTHER STRUCTURAL MEMBERS SHALL BE SPRUCE-PINE-FIR #2 (SPF) OR SOUTHERN PINE #2 (SYP) LUMBER, OR BETTER (KILN-DRIED). ALL HEADERS HAVE BEEN DESIGNED BASED ON CALCULATED LOADS & SIZED ACCORDINGLY. CODE TABLES HAVE NOT BEEN USED.
- ALL NON-BEARING INTERIOR STUD WALLS SHALL BE CONSTRUCTED WITH 2x 'STUD' GRADE MEMBERS SPACED @ 16" O.C. (MAX., U.N.O.)
  - HEADERS IN NON-LOAD BEARING WALLS SHALL BE: (1)2x4/6 FLAT @ OPENINGS UP TO 4', (2)2x4/6 FLAT UP TO 8'.
- ALL FRAMING LUMBER SHALL BE DRIED TO 15% MC (KD-15).
- ENGINEERED LUMBER BEAMS TO MEET OR EXCEED THE FOLLOWING:
  - "LSL" - Fb=2325 psi; Fv=310 psi; E=1.55x10^6 psi
  - "LVL" - Fb=2600 psi; Fv=285 psi; E=2.0x10^6 psi
  - "PSL" - Fb=2400 PSI; FV=290 PSI; E=2.0X10^6 PSI
- M+K SHALL BE FULLY INDEMNIFIED FOR ANY AND ALL ISSUES RESULTING FROM OR RELATED TO ANY BUILDING COMPONENT IF THE OWNER DOES NOT SUBMIT THE COMPONENT SHOP DRAWINGS TO M+K FOR STRUCTURAL REVIEW PRIOR TO FABRICATION, DELIVERY, OR INSTALLATION.
- FOR 2 & 3 PLY BEAMS OF EQUAL WIDTH, FASTEN PLIES TOGETHER WITH 3 ROWS OF 3"x0.120" NAILS @ 8" O/C OR 2 ROWS 1/4"x3 1/2" SIMPSON SDS SCREWS (OR 3 1/2" TRUSSLOK SCREWS) @ 16" O/C. USE A MINIMUM OF 3 ROWS FOR BEAM DEPTHS OF 14" OR GREATER. APPLY FASTENING AT BOTH FACES FOR 3-PLY CONDITION. LOCATE TOP & BOTTOM NAILS/SCREWS 2" FROM EDGE. SOLID 3 1/2" OR 5 1/4" BEAMS ARE ACCEPTABLE. USE 2 ROWS OF NAILS FOR 2x6 & 2x8 MEMBERS.
- FOR 4 PLY BEAMS OF EQUAL WIDTH, FASTEN PLIES TOGETHER WITH 3 ROWS OF 1/4"x6" SIMPSON SDS SCREWS (OR 6 3/4" TRUSSLOK SCREWS) @ 16" O/C. USE A MINIMUM OF 4 ROWS FOR BEAM DEPTHS OF 14" OR GREATER. APPLY FASTENING AT BOTH FACES (ONE SIDE ONLY FOR TRUSSLOK SCREWS). LOCATE TOP AND BOTTOM SCREWS 2" FROM EDGE. A SOLID 7" BEAM IS ACCEPTABLE.
- ALL HEADERS SHALL BE SUPPORTED BY (1)2x JACK STUD & (1)2x KING STUD, MINIMUM.
  - THE NUMBER OF STUDS SPECIFIED AT A SUPPORT INDICATES THE NUMBER OF JACK STUDS REQUIRED, U.N.O..
- ALL MULTI-PLY STUDS TO BE FASTENED TOGETHER w/ 3"X0.131" NAILS @ 24" O.C. (MIN.), EACH PLY.
- PROVIDE SOLID BLOCKING IN FLOOR SYSTEM UNDER ALL POSTS CONTINUOUS TO FND./BEARING. BLOCKING TO MATCH POST ABOVE.
- FASTEN 2x WOOD PLATES TO TOP FLANGE OF STEEL BEAMS WITH P.A.F.'s ("HILTI" X-CF PINS OR EQUAL) @ 16" O.C. STAGGERED, OR 1/2" DIA. BOLTS @ 48" O.C. STAGGERED.
- ALL EXTERIOR 4x4 WOOD POSTS SHALL HAVE SIMPSON BCS2-2/4 CAP & ABW44Z BASE, U.N.O.

FLOOR FRAMING

- I-JOISTS/TRUSSES SHALL BE DESIGNED BY MANUF. TO MEET OR EXCEED L/480 LIVE LOAD DEFLECTION CRITERIA. (EXCLUDES MARBLE FLOORS - CONTACT M+K FOR MARBLE FLOOR DESIGNS)
- AT I-JOIST FLOORS, PROVIDE 1 1/8" MIN. OSB RIM BOARD.
- METAL HANGERS SHALL BE SPECIFIED BY MANUFACTURER, U.N.O.
- FLOOR SHEATHING SHALL BE 23/32" A.P.A. RATED 'STURD-I-FLOOR' 24" O.C., EXPOSURE 1 (OR APPROVED EQUAL) WITH TONGUE AND GROOVE EDGES. FASTEN TO FRAMING MEMBERS W/ GLUE AND
  - 2 1/2" x 0.131" NAILS @ 6"o.c. @ PANEL EDGES & @ 12"o.c. FIELD.
  - 2 3/4" x 0.120" NAILS @ 4" O.C. @ PANEL EDGES & @ 8" O.C. FIELD.
  - 2 3/4" x 0.113" NAILS @ 3" O.C. @ PANEL EDGES & @ 6" O.C. IN FIELD.
  - #6 x 2" MIN. SCREWS @ 6" O.C. @ PANEL EDGES & @ 12" O.C. FIELD.

ROOF FRAMING

- BAY WINDOWS & SHED ROOFS (UP TO 6' SPAN) CAN BE 2x4 OR 2x6 RAFTERS & CEILING JOISTS @ 16/24" O.C.
- FASTEN EACH ROOF TRUSS TO TOP PLATE W/ SIMPSON H2.5T CLIP (OR APPROVED EQUAL) @ ALL BEARING POINTS. PROVIDE (2) H2.5T CLIPS AT 2-PLY GIRDER TRUSSES, (3) H2.5T CLIPS AT 3-PLY GIRDER TRUSSES & ROOF BEAMS - AT ALL BEARING POINTS.
- METAL HANGERS SHALL BE SPECIFIED BY THE MANUFACTURER, U.N.O.
- ERECT AND INSTALL ROOF TRUSSES PER WTCA & TPI'S BCSI 1-08 "GUIDE TO GOOD PRACTICE FOR HANDLING, INSTALLING & BRACING OF METAL PLATE CONNECTED WOOD TRUSSES."
- SUPPORT PORCH & SHORT SPAN ROOF TRUSSES (MAX 7' SPAN) w/ 2x4 LEDGER FASTENED TO:
  - RIM BOARD w/ (2) 3"x0.131" NAILS @ 16" O.C. MAX. (I-JOISTS)
  - TRUSS VERTICALS w/ (3) 3"x0.131" NAILS @ 19.2" O.C. MAX. (FLOOR TRUSSES)
- ROOF SHEATHING SHALL BE 7/16" A.P.A. RATED SHEATHING 24/16 EXPOSURE 1 (OR APPROVED EQUAL). FASTEN TO FRAMING MEMBERS
  - w/ 2 1/2" x 0.131" NAILS @ 6"o.c. @ PANEL EDGES & @ 12" O.C. FIELD.
  - w/ 2 3/4" x 0.120" NAILS @ 4"o.c. @ PANEL EDGES & @ 8" O.C. FIELD.
  - w/ 2 3/4" x 0.113" NAILS @ 3"o.c. @ PANEL EDGES & @ 6" O.C. FIELD.

HOLD-DOWN SCHEDULE

SYMBOL	SPECIFICATION
▶ HD-1	SIMPSON HTT4 HOLD-DOWN * (5/8" DIA. ANCHOR)
▶ HD-2	SIMPSON MSTC66 STRAP TIE (CENTER STRAP ON FLOOR SYSTEM U.N.O.) -OR- MSTC66B3 ALTERNATE
▶ HD-3	SIMPSON STHD14/STHD14RJ

* UTILIZE THE SSTB24 ANCHOR BOLT @ ALL MONOSLAB & INTERIOR RAISED SLAB (I.E. THICKENED SLABS, FOOTINGS) CONDITIONS. MINIMUM 24" MIN. FOOTING THICKNESS REQUIRED.
EPOXY-SET ALTERNATE FOR MONOSLAB & INTERIOR RAISED SLAB CONDITIONS ONLY: UTILIZE SIMPSON 'SET' EPOXY SYSTEM TO FASTEN THREADED ROD INTO CONCRETE FOUNDATION. PROVIDE 10" (FOR 5/8" DIA.) OR 15" (FOR 7/8" DIA.) MIN. EMBEDMENT INTO CONCRETE.
INSTALL PER MANUF. INSTRUCTIONS. MINIMUM 16" FOOTING THICKNESS REQ'D.
DO NOT LOCATE ANCHORS WITHIN 1 3/4" OF EDGE OF CONCRETE.

LEGEND

- INTERIOR BEARING WALL
- BEARING WALL ABOVE
- BEAM / HEADER
- INDICATES SHEAR WALL & EXTENT
- EXTENT OF OVERFRAMING

⊥L METAL HANGER

* INDICATES POST ABOVE. PROVIDE SOLID BLOCKING UNDER POST OR JAMB ABOVE.

▶ INDICATES HOLD-DOWN OR STRAP. REFER TO SCHEDULE.

LATERAL BRACING & SHEAR WALL SHEATHING SPECIFICATIONS

THIS MODEL HAS BEEN DESIGNED TO RESIST LATERAL FORCES RESULTING FROM:

120 MPH WIND IN 2018 NCSBC:RC

(120 MPH WIND SPEED IN ASCE 7-10 WIND MAP, PER IRC R301.2.1.1)
EXP. B, RISK CAT. 2 & SEISMIC CAT. A/B.

THE DESIGN WAS COMPLETED PER 2015 IBC (SECTION 1609) & ASCE 7-10, AS PERMITTED BY R301.1.3 OF THE 2018 NCSBC:RC, OR THE SIMPLIFIED PRESCRIPTIVE PROCEDURE IN ACCORDANCE WITH THE 2015 IRC IF THE PARAMETERS OF SECTION R602.12 COMPLY. ACCORDINGLY, THIS MODEL, AS DOCUMENTED AND DETAILED HEREWITHIN, IS ADEQUATE TO RESIST THE CODE REQUIRED LATERAL FORCES.

DESIGN WIND UPLIFT LOADS HAVE BEEN CALCULATED UTILIZING ASCE 7-10 (ACCEPTED ENGINEERING PRACTICE) AS ALLOWED PER 2018 NCSBC:RC SECTION R802.11.1.1. THIS MODEL HAS BEEN DETAILED WHERE REQUIRED & ENGINEERED TO RESIST THE WIND UPLIFT LOAD PATH PER SECTIONS R602.3.5& R802.11.

EXT. WALL SHEATHING SPECIFICATION

- 7/16" OSB OR 15/32" PLYWOOD:
  FASTEN SHEATHING w/ 2 3/4"x0.113" NAILS @ 6" O.C. AT EDGES & @ 12" O.C. IN THE PANEL FIELD. TYP, U.N.O.
- HORIZONTAL BLOCKING OF EXT. WALL/SHEAR WALL PANEL EDGES IS NOT REQUIRED BY THIS DESIGN EXCEPT FOR THOSE AREAS SPECIFICALLY NOTED.
- ALL EXT. WALLS SHALL BE CONTINUOUSLY SHEATHED AND ARE CONSIDERED SHEAR WALLS.
- ALT. STAPLE CONNECTION SPEC: 1 1/2" 16 GA STAPLES (7/16" CROWN) @ 3" O.C. AT EDGES & @ 6" O.C. IN FIELD.

BLOCKED PANEL EDGES

- AT DESIGNATED AREAS - FASTEN SHEATHING w/ 2 3/4" x 0.113" NAILS @ 6" O.C. AT ALL PANEL EDGES AND 12" O.C. IN THE PANEL FIELD OR 1 3/4" 16 GA STAPLES (7/16" CROWN) @ 3" O.C. AT EDGES & @ 6" O.C IN FIELD. ALL SHEATHING PANELS SHALL BE ORIENTED AND INSTALLED FULL HEIGHT OF SHEAR WALL OR 2x HORIZONTAL BLOCKING SHALL BE PROVIDED TO SUPPORT ALL UNSUPPORTED PANEL EDGES & EDGE FASTENING.

3" O.C. EDGE NAILING

- AT DESIGNATED AREAS - FASTEN PANEL EDGES OF WOOD STRUCTURAL WALL SHEATHING TO FRAMING w/ 8d NAILS @ 3" O.C. NO STAPLE ALTERNATIVE AVAILABLE AT THIS SPEC. ALL SHEATHING PANELS SHALL BE ORIENTED AND INSTALLED FULL HEIGHT OF SHEAR WALL OR 2x HORIZONTAL BLOCKING SHALL BE PROVIDED TO SUPPORT UNSUPPORTED PANEL EDGES AND 3" O.C. EDGE FASTENING.

NOTES

- SEE CONNECTION SPECIFICATIONS CHART FOR STANDARD SHEAR TRANSFER DETAILING. IF ADDITIONAL CAPACITY IS REQUIRED BY DESIGN, IT WILL BE SPECIFICALLY NOTED ON PLAN.
- DESIGN ASSUMES 16" O.C MAX. STUD SPACING, U.N.O.
- ALL STRUCTURAL PANELS ARE TO BE DIRECTLY APPLIED TO STUD FRAMING.
- PRE-MANUFACTURED PANELIZED WALLS: FASTEN TOGETHER END STUDS OF WALL PANELS SHEATHED W/ OSB OR PLYWOOD W/ 3" x 0.120" NAILS @ 4" O.C. (THRU ONE SIDE ONLY)

INDICATES EXTENT OF INT. OSB SHEARWALL OR 3" O.C. OSB SHEARWALL.

▶ INDICATES HOLDOWN BELOW

NON-BEARING HEADER SCHEDULE

SPAN	2x4 NON-BEARING PARTITION WALL	2x6 NON-BEARING PARTITION WALL
UP TO 3'-0"	(1)2x4 FLAT	(1)2x6 FLAT
UP TO 6'-0"	(2)2x4	(3)2x4
UP TO 8'-0"	(2)2x6	(3)2x6
UP TO 12'-0"	(2)2x8	(3)2x8

NOTES:
- ALL NON-BEARING INTERIOR STUD WALLS SHALL BE CONSTRUCTED WITH 2x 'STUD' GRADE MEMBERS SPACED @ 24" O.C. (MAX.)

ENGINEERED BEAM MATERIAL SCHEDULE

BEAM NUMBER	LVL OPTION	PSL OPTION	LSL OPTION	FLITCH OPTION	STEEL OPTION
001	(2)1 3/4"x16" - D	3 1/2"x16" - D	N/A	(2)2x12 + (1) 3/8"x11 1/4" STEEL FLITCH PLATES - D	W12x14 - D
002	(2)1 3/4"x11 7/8" - D	3 1/2"x11 7/8" - D	(3)1 3/4"x11 7/8" - D	(2)2x12 + (1) 1/4"x11 1/4" STEEL FLITCH PLATES - D	W12x14 - D
003	(2)1 3/4"x14" - F	3 1/2"x14" - F	(2)1 3/4"x14" - F	(2)2x12 + (1) 1/4"x11 1/4" STEEL FLITCH PLATES - F	W12x14 - F
004	(2)1 3/4"x14" - F	3 1/2"x14" - F	(3)1 3/4"x14" - F	(2)2x12 + (1) 3/8"x11 1/4" STEEL FLITCH PLATES - F	W12x14 - F
005	(3)1 3/4"x18" - FT	5 1/4"x18" - FT	N/A	(3)2x12 + (2) 3/8"x11 1/4" STEEL FLITCH PLATES - F	W12x26 - F
006	(3)1 3/4"x18" - FT	5 1/4"x18" - FT	N/A	(3)2x12 + (2) 3/8"x11 1/4" STEEL FLITCH PLATES - F	W12x26 - F
007	(2)1 3/4"x14" - F	3 1/2"x14" - F	(2)1 3/4"x14" - F	(2)2x12 + (1) 1/4"x11 1/4" STEEL FLITCH PLATES - F	W12x14 - F
008	(2)1 3/4"x14" - F	3 1/2"x14" - F	(2)1 3/4"x14" - F	(2)2x12 + (1) 1/4"x11 1/4" STEEL FLITCH PLATES - F	W12x14 - F
009	(2)1 3/4"x9 1/4" - D	3 1/2"x9 1/4" - D	(2)1 3/4"x9 1/4" - D	(2)2x10 + (1) 1/2"x9 1/4" STEEL FLITCH PLATES - D	W10x12 - D
010	(2)1 3/4"x16" - H	3 1/2"x16" - H	(3)1 3/4"x16" - H	(3)2x12 + (2) 1/2"x11 1/4" STEEL FLITCH PLATES - H	N/A
011	(2)1 3/4"x11 7/8" - D	3 1/2"x11 7/8" - D	(3)1 3/4"x11 7/8" - D	(2)2x12 + (1) 1/4"x11 1/4" STEEL FLITCH PLATES - D	W12x14 - D
012	(3)1 3/4"x16" - D	5 1/4"x16" - D	(4)1 3/4"x16" - D	(3)2x12 + (2) 1/2"x11 1/4" STEEL FLITCH PLATES - D	W12x19 - D
013	(2)1 3/4"x11 7/8" - D	3 1/2"x11 7/8" - D	(3)1 3/4"x11 7/8" - D	(2)2x12 + (1) 1/4"x11 1/4" STEEL FLITCH PLATES - D	W12x14 - D
014	(2)1 3/4"x16" - D	3 1/2"x16" - D	(3)1 3/4"x16" - D	(3)2x12 + (2) 3/8"x11 1/4" STEEL FLITCH PLATES - D	W12x14 - D
015***	(3)1 3/4"x11 7/8" - D	N/A	(3)1 3/4"x11 7/8" - D	(3)2x12 + (2) 1/2"x11 1/4" STEEL FLITCH PLATES - D	W12x14 - D
016	(2)1 3/4"x11 7/8" - F	3 1/2"x11 7/8" - F	(3)1 3/4"x11 7/8" - F	(2)2x12 + (1) 1/4"x11 1/4" STEEL FLITCH PLATES - F	W12x14 - F

- BEAM NOTATION:
  - "F" INDICATES FLUSH BEAM
  - "FT" INDICATES FLUSH TOP BEAM
  - "FB" INDICATES FLUSH BOTTOM BEAM
  - "D" INDICATES DROPPED BEAM
  - "H" INDICATES DROPPED OPENING HEADER
- REFER TO DETAIL D/SD2.0 FOR TYPICAL FLITCH BEAM CONNECTIONS
- REFER TO DETAIL E/SD2.0 FOR TYPICAL STEEL BEAM CONNECTIONS
- FOR FLUSH TOP BEAMS PROVIDE 2X STACKED PLATES BENEATH BEAM AS REQ'D. FASTEN PLATES IN SUCCESSION W/ (2) 3"X0.120" NAILS @ 8" O.C.
- FOR FLUSH BOTTOM BEAMS PROVIDE 2x STACKED PLATES ATOP BEAM AS REQ'D. FASTEN PLATES IN SUCCESSION w/ (2) 3"x0.120" NAILS @ 8" O.C.

*** - SEE PLAN FOR EXTENT OF 3-PLY BEAM

ADDITIONAL NOTES FOR TRUSS & I-JOIST MANUFACTURER

ROOF TRUSS, FLOOR TRUSS AND ENGINEERED JOISTS SHALL BE DESIGNED TO MEET THE DIFFERENTIAL DEFLECTION CRITERIA BELOW, UNLESS NOTED OTHERWISE ON PLAN.

TRUSSES/JOISTS SHALL BE DESIGNED SO THAT DIFFERENTIAL DEFLECTION BETWEEN ADJACENT PARALLEL TRUSSES/JOISTS OR GIRDER TRUSSES/FLUSH BEAMS DO NOT EXCEED THE FOLLOWING:

A. ROOF TRUSSES:
   1/4" DEAD LOAD
B. FLOOR TRUSSES, ATTIC TRUSSES, & I-JOISTS:
   1/8" DEAD LOAD
C. FLOOR TRUSSES & ATTIC TRUSSES ADJACENT TO FLOOR FRAMING BY OTHERS:
   LIMIT ABSOLUTE TRUSS DEFLECTION TO 3/16" DEAD LOAD. (NOT DIFFERENTIAL DEFLECTION)

SD2.1 REFERS TO SD2.1A FOR LVL/PSL/LSL BEAMS OR SD2.1B FOR FLITCH BEAMS OR SD2.1C FOR STEEL BEAMS

VENEER LINTEL SCHEDULE

SPAN (MAX)	HEIGHT OF VENEER ABOVE LINTEL	STEEL ANGLE SIZE
3'-0"	20 FT. MAX	L3"x3"x1/4"
6'-0"	3 FT. MAX	L3"x3"x1/4"
	12 FT. MAX	L4"x3"x1/4"
	20 FT. MAX	L5"x3 1/2"x5/16"
8'-0"	3 FT. MAX	L4"x4"x1/4" *
	12 FT. MAX	L5"x3 1/2"x5/16"
	16 FT. MAX	L6"x3 1/2"x5/16"
9'-6"	12 FT. MAX	L6"x3 1/2"x5/16"
16'-0"	2 FT. MAX	L7"x4"x1/2" **
	3 FT. MAX	L8"x4"x1/2" **

ALL LINTELS:
- SHALL SUPPORT 2 5/8" - 3 1/2" VENEER w/ 40 psf MAXIMUM WEIGHT.
- < 16' SHALL HAVE 4" MIN. BEARING
- >= 16' SHALL HAVE 8" MIN. BEARING
- < 16' SHALL NOT BE FASTENED BACK TO HEADER.
- >= 16' SHALL BE FASTENED BACK TO WOOD HEADER IN WALL @48"o.c. w/ 1/2" DIA. x 3 1/2" LONG LAG SCREWS IN 2" LONG VERTICALLY SLOTTED HOLES.
- MAX. VENEER HT. APPLIES TO ANY PORTION OF BRICK OVER THE OPENING.
- ALL LINTELS SHALL BE LONG LEG VERTICAL.
- WHEN SUPPORTING VENEER < 3" WIDE THE EXTERIOR TOE OF THE HORIZONTAL LEG MAY BE CUT IN THE FIELD TO BE 3 1/4" WIDE OVER THE BEARING LENGTH ONLY. THIS IS TO ALLOW FOR MORTAR JOINT FINISHING.
- SEE STRUCTURAL PLANS FOR ANY LINTEL CONDITION NOT ENCOMPASSED BY THE ABOVE PARAMETERS. FOR ANY LINTEL FASTENED BACK TO BEAM, FASTENERS SHALL MAINTAIN A 2 1/2" (MINIMUM) CLEAR DISTANCE FROM BOTTOM OF BEAM.

* FOR QUEEN VENEER USE L4x3x1/4".
** FOR 3 1/2" VENEER ONLY. SEE PLAN FOR VENEER SUPPORT IF VENEER < 3 1/2" THICK.

seal: 6/2/25

NORTH CAROLINA PROFESSIONAL SEAL 086012 ENGINEER JOSEPH T. RICKER

MULHERN+KULP
RESIDENTIAL STRUCTURAL ENGINEERING
300 Riverside Ave, Building 1 / Jenkintown, PA 19002
P:215-576-0001 / mulhernkulp.com
NC LIC. #C-3825

M&K project number: 126-23047

project mgr: JTR
drawn by: GTK
issue date: 05-29-25

REVISIONS:
date: initial:

DRB HOMES

STRUCTURAL NOTES
HONEYCUTT HILLS
LOT 39 - STONEFIELD 2
RALEIGH, NC

sheet: S0.0

FILE: RLH - Honeycutt Hills - Lot 39 - Structurals DATE: 6/2/2025 7:13 AM

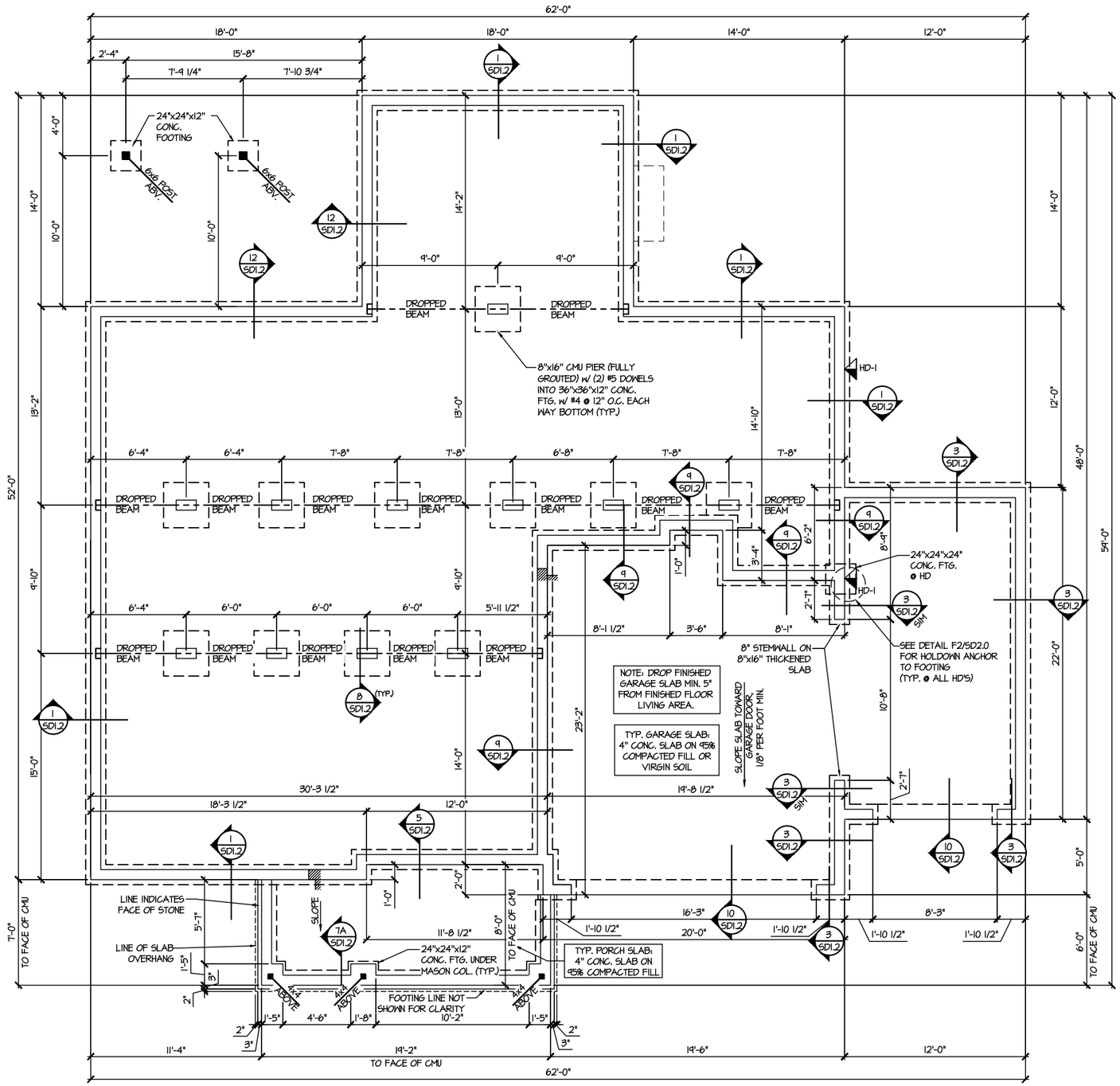

1 CRAWLSPACE FOUNDATION PLAN

SCALE: 1/8"=1'-0"

LEGEND

- INTERIOR BEARING WALL
- BEARING WALL ABOVE
- BEAM / HEADER
- INDICATES SHEAR WALL & EXTENT
- EXTENT OF OVERFRAMING
- METAL HANGER
- * INDICATES POST ABOVE. PROVIDE SOLID BLOCKING UNDER POST OR JAMB ABOVE.
- INDICATES HOLD-DOWN OR STRAP. REFER TO SCHEDULE.

REFER TO S0.0 FOR TYPICAL STRUCTURAL NOTES & SCHEDULES

seal: 6/2/25

NORTH CAROLINA PROFESSIONAL SEAL 036012 ENGINEER JOSEPH T. RICKER

MULHERN+KULP
RESIDENTIAL STRUCTURAL ENGINEERING
3000 Bancroyd Ave, Building 4 • Ambler, PA 19002
P: 215-646-8001 • mulhernkulp.com
NC LIC. #C-3825

M&K project number: 126-23047

project mgr: JTR
drawn by: GTK
issue date: 05-29-25

REVISIONS:

date:	initial:

DRB HOMES

FOUNDATION PLANS
HONEYCUTT HILLS
LOT 39 - STONEFIELD 2
RALEIGH, NC

sheet: S1.0

FILE: RLH - Honeycutt Hills - Lot 39 - Structurals DATE: 6/2/2025 7:13 AM

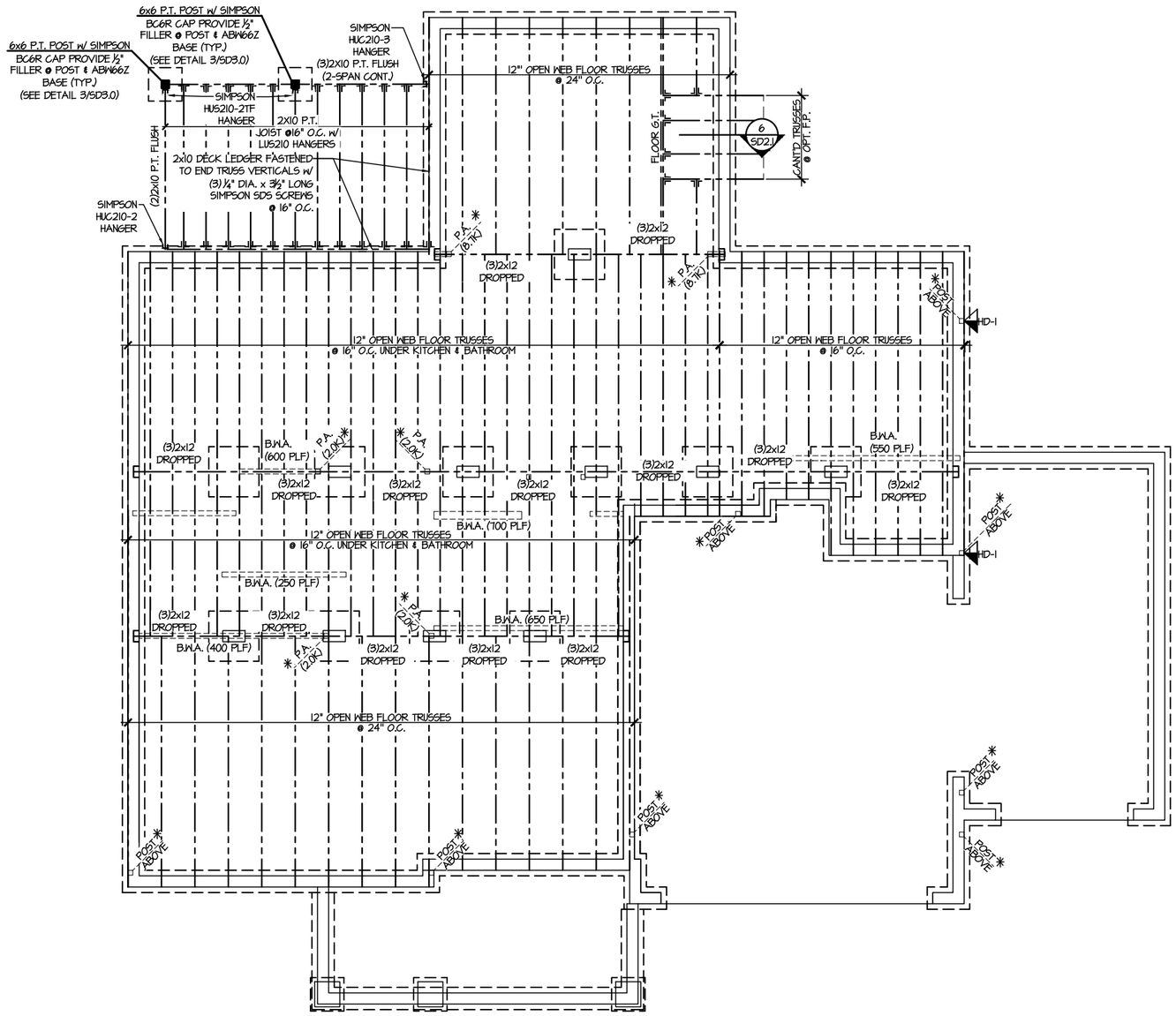

1 1ST FLOOR FRAMING PLAN (CRAWLSPACE)
SCALE: 1/8"=1'-0"

LEGEND

- INTERIOR BEARING WALL
- BEARING WALL ABOVE
- BEAM / HEADER
- INDICATES SHEAR WALL & EXTENT
- EXTENT OF OVERFRAMING
- METAL HANGER
- * INDICATES POST ABOVE. PROVIDE SOLID BLOCKING UNDER POST OR JAMB ABOVE.
- INDICATES HOLD-DOWN OR STRAP. REFER TO SCHEDULE.

REFER TO S0.0 FOR TYPICAL STRUCTURAL NOTES & SCHEDULES

seal: 6/2/25

NORTH CAROLINA PROFESSIONAL SEAL 086012 ENGINEER JOSEPH T. RICKER

MULHERN+KULP
RESIDENTIAL STRUCTURAL ENGINEERING
3000 Bancroft Ave, Building 4 • Ambler, PA 19002
P: 215-646-8001 • mulhernkulp.com
NC LIC. #C-3825

M&K project number: 126-23047

project mgr: JTR
drawn by: GTK
issue date: 05-29-25

REVISIONS:

date:	initial:

DRB HOMES

FLOOR FRAMING PLANS

HONEYCUTT HILLS
LOT 39 - STONEFIELD 2
RALEIGH, NC

sheet: S2.0

FILE: RLH - Honeycutt Hills - Lot 39 - Structurals DATE: 6/2/2025 7:13 AM

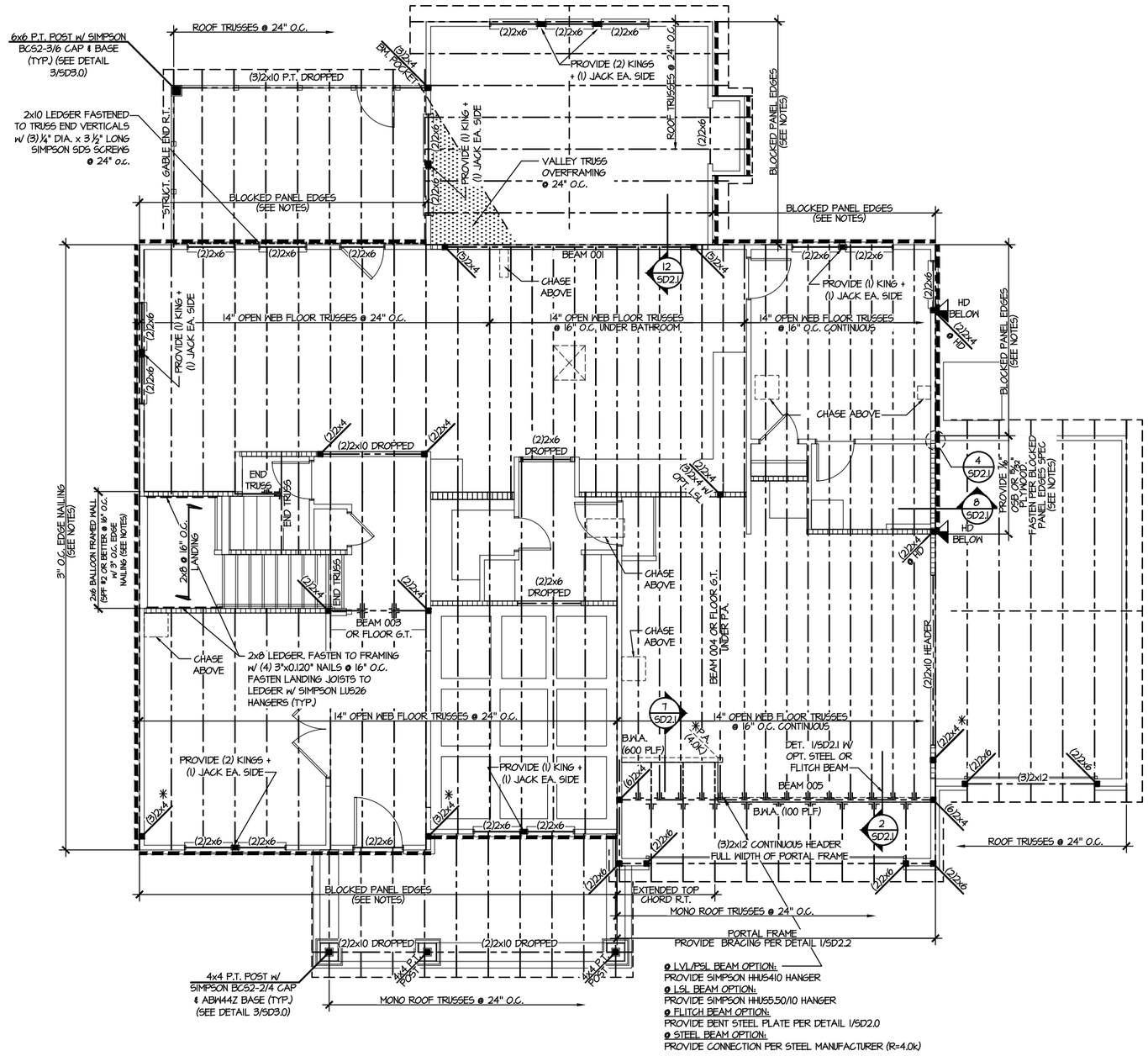

1 2ND FLOOR FRAMING PLAN

SCALE: 1/8"=1'-0"

SD2.1 REFERS TO SD2.1A FOR LVL/PSL/LSL BEAMS OR SD2.1B FOR FLITCH BEAMS OR SD2.1C FOR STEEL BEAMS

LEGEND

- INTERIOR BEARING WALL
- BEARING WALL ABOVE
- BEAM / HEADER
- INDICATES SHEAR WALL & EXTENT
- EXTENT OF OVERFRAMING
- ⊥L METAL HANGER
- * INDICATES POST ABOVE. PROVIDE SOLID BLOCKING UNDER POST OR JAMB ABOVE.
- INDICATES HOLD-DOWN OR STRAP. REFER TO SCHEDULE.

REFER TO S0.0 FOR TYPICAL STRUCTURAL NOTES & SCHEDULES

ENGINEERED BEAM MATERIAL SCHEDULE

BEAM NUMBER	LVL OPTION	PSL OPTION	LSL OPTION	FLITCH OPTION	STEEL OPTION
001	(2)1¾"x16" - D	3½"x16" - D	N/A	(2)2x12 + (1) ⅜"x11¾" STEEL FLITCH PLATES - D	W12x14 - D
002	(2)1¾"x11⅞" - D	3½"x11⅞" - D	(3)1¾"x11⅞" - D	(2)2x12 + (1) ½"x11¾" STEEL FLITCH PLATES - D	W12x14 - D
003	(2)1¾"x14" - F	3½"x14" - F	(2)1¾"x14" - F	(2)2x12 + (1) ½"x11¾" STEEL FLITCH PLATES - F	W12x14 - F
004	(2)1¾"x14" - F	3½"x14" - F	(3)1¾"x14" - F	(2)2x12 + (1) ⅜"x11¾" STEEL FLITCH PLATES - F	W12x14 - F
005	(3)1¾"x18" - FT	5¼"x18" - FT	N/A	(3)2x12 + (2) ⅜"x11¾" STEEL FLITCH PLATES - F	W12x26 - F
006	(3)1¾"x18" - FT	5¼"x18" - FT	N/A	(3)2x12 + (2) ⅜"x11¾" STEEL FLITCH PLATES - F	W12x26 - F
007	(2)1¾"x14" - F	3½"x14" - F	(2)1¾"x14" - F	(2)2x12 + (1) ½"x11¾" STEEL FLITCH PLATES - F	W12x14 - F
008	(2)1¾"x14" - F	3½"x14" - F	(2)1¾"x14" - F	(2)2x12 + (1) ½"x11¾" STEEL FLITCH PLATES - F	W12x14 - F
009	(2)1¾"x9¼" - D	3½"x9¼" - D	(2)1¾"x9¼" - D	(2)2x10 + (1) ½"x9¼" STEEL FLITCH PLATES - D	W10x12 - D
010	(2)1¾"x16" - H	3½"x16" - H	(3)1¾"x16" - H	(3)2x12 + (2) ½"x11¾" STEEL FLITCH PLATES - H	N/A
011	(2)1¾"x11⅞" - D	3½"x11⅞" - D	(3)1¾"x11⅞" - D	(2)2x12 + (1) ½"x11¾" STEEL FLITCH PLATES - D	W12x14 - D
012	(3)1¾"x16" - D	5¼"x16" - D	(4)1¾"x16" - D	(3)2x12 + (2) ½"x11¾" STEEL FLITCH PLATES - D	W12x19 - D
013	(2)1¾"x11⅞" - D	3½"x11⅞" - D	(3)1¾"x11⅞" - D	(2)2x12 + (1) ½"x11¾" STEEL FLITCH PLATES - D	W12x14 - D
014	(2)1¾"x16" - D	3½"x16" - D	(3)1¾"x16" - D	(3)2x12 + (2) ⅜"x11¾" STEEL FLITCH PLATES - D	W12x14 - D
015***	(3)1¾"x11⅞" - D	N/A	(3)1¾"x11⅞" - D	(3)2x12 + (2) ½"x11¾" STEEL FLITCH PLATES - D	W12x14 - D
016	(2)1¾"x11⅞" - F	3½"x11⅞" - F	(3)1¾"x11⅞" - F	(2)2x12 + (1) ½"x11¾" STEEL FLITCH PLATES - F	W12x14 - F

- BEAM NOTATION:
  - "F" INDICATES FLUSH BEAM
  - "FT" INDICATES FLUSH TOP BEAM
  - "FB" INDICATES FLUSH BOTTOM BEAM
  - "D" INDICATES DROPPED BEAM
  - "H" INDICATES DROPPED OPENING HEADER
- REFER TO DETAIL D/SD2.0 FOR TYPICAL FLITCH BEAM CONNECTIONS
- REFER TO DETAIL E/SD2.0 FOR TYPICAL STEEL BEAM CONNECTIONS
- FOR FLUSH TOP BEAMS PROVIDE 2X STACKED PLATES BENEATH BEAM AS REQ'D. FASTEN PLATES IN SUCCESSION W/ (2) 3"X0.120" NAILS @ 8" O.C.
- FOR FLUSH BOTTOM BEAMS PROVIDE 2x STACKED PLATES ATOP BEAM AS REQ'D. FASTEN PLATES IN SUCCESSION w/ (2) 3"x0.120" NAILS @ 8" O.C.

*** - SEE PLAN FOR EXTENT OF 3-PLY BEAM

seal: 6/2/25

NORTH CAROLINA PROFESSIONAL SEAL 036012 ENGINEER JOSEPH T. RICKER

MULHERN+KULP
RESIDENTIAL STRUCTURAL ENGINEERING
5000 Reynolds Ave, Building 4 • Ambler, PA 19002
P: 215-646-8001 • mulhernkulp.com
NC LIC. #C-3825

M&K project number: 126-23047

project mgr: JTR
drawn by: GTK
issue date: 05-29-25

REVISIONS:
date: initial:

DRB HOMES

FLOOR FRAMING PLANS
HONEYCUTT HILLS
LOT 39 - STONEFIELD 2
RALEIGH, NC

sheet: S3.0

FILE: RLH - Honeycutt Hills - Lot 39 - Structurals DATE: 6/2/2025 7:14 AM

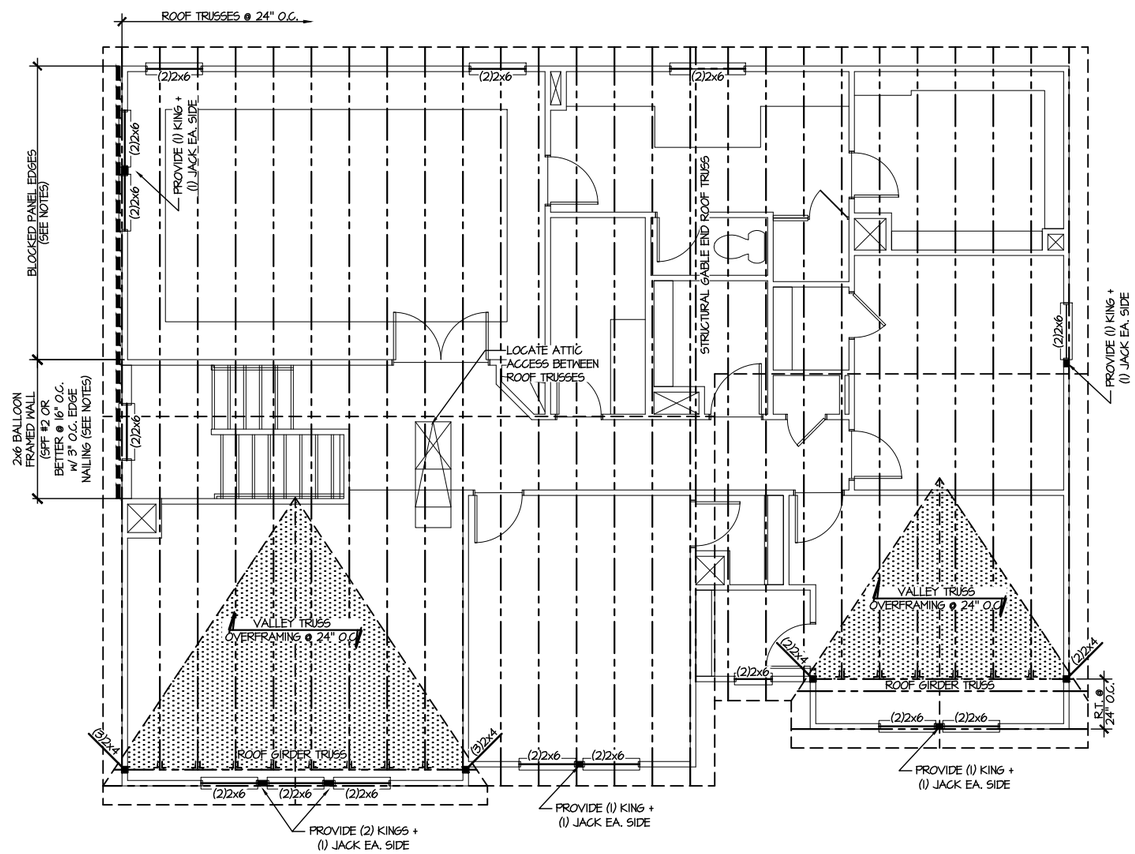

1 ROOF FRAMING PLAN
SCALE: 1/8"=1'-0"

LEGEND

- INTERIOR BEARING WALL
- BEARING WALL ABOVE
- BEAM / HEADER
- INDICATES SHEAR WALL & EXTENT
- EXTENT OF OVERFRAMING
- ⊥L METAL HANGER
- * INDICATES POST ABOVE. PROVIDE SOLID BLOCKING UNDER POST OR JAMB ABOVE.
- INDICATES HOLD-DOWN OR STRAP. REFER TO SCHEDULE.

REFER TO S0.0 FOR TYPICAL STRUCTURAL NOTES & SCHEDULES

seal: 6/2/25

NORTH CAROLINA PROFESSIONAL SEAL 036012 ENGINEER JOSEPH T. RICKER

MULHERN+KULP
RESIDENTIAL STRUCTURAL ENGINEERING
3000 Bayard St. Ave, Building 4 • Ambler, PA 19002
P: 215-646-8001 • mulhernkulp.com
NC LIC. #C-3825

M&K project number: 126-23047

project mgr: JTR
drawn by: GTK
issue date: 05-29-25

REVISIONS:
date: initial:

DRB HOMES

ROOF FRAMING PLANS
HONEYCUTT HILLS
LOT 39 - STONEFIELD 2
RALEIGH, NC

sheet: S4.0

FILE: RLH - Honeycutt Hills - Lot 39 - Structurals DATE: 6/2/2025 7:14 AM

LETTERED DETAILS ARE TYPICAL FOR THIS HOME & SHALL BE IMPLEMENTED IN ALL APPLICABLE AREAS. THESE DETAILS ARE NOT "CUT" ON THE PLANS.

NUMBERED DETAILS ARE PLAN SPECIFIC AND ARE ONLY REQUIRED WHERE SPECIFICALLY INDICATED ("CUT") ON THE PLANS.

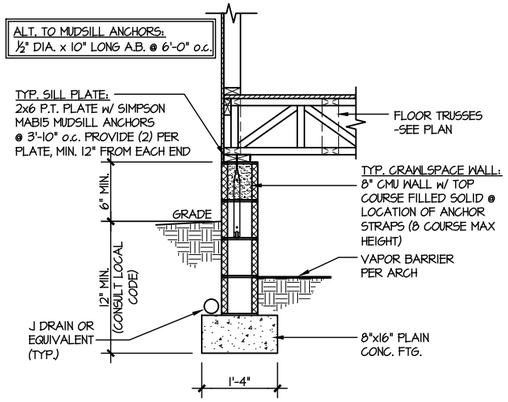

1 TYPICAL CRAWLSPACE FOUNDATION
SCALE: 3/8"=1'-0"

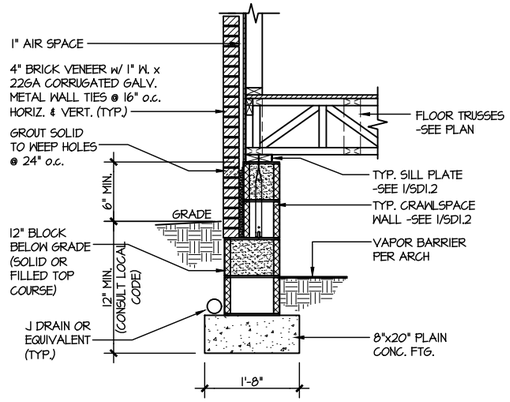

2 TYPICAL CRAWLSPACE FOUNDATION
SCALE: 3/8"=1'-0" w/ BRICK VENEER

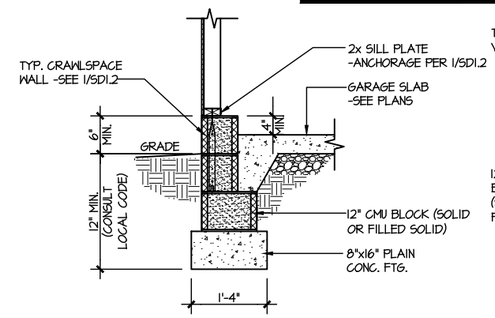

3 TYPICAL GARAGE FOUNDATION
SCALE: 3/8"=1'-0"

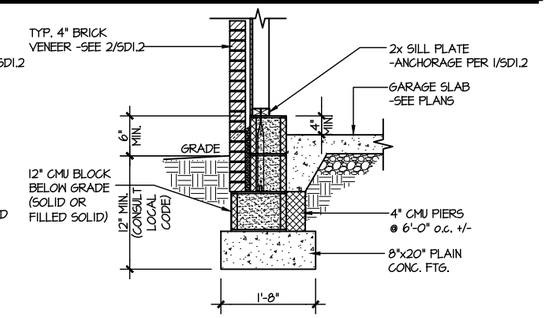

4 TYPICAL GARAGE FOUNDATION
SCALE: 3/8"=1'-0" w/ BRICK VENEER

PLAIN CONC. FOOTINGS AS DIMENSIONED & SHOWN ARE MINIMUM SIZES REQUIRED & HAVE BEEN ENGINEERED. ADDITION OF CONTINUOUS REBAR OR LARGER FOOTINGS MAY BE PROVIDED AT THE DISCRETION OF THE BUILDER.

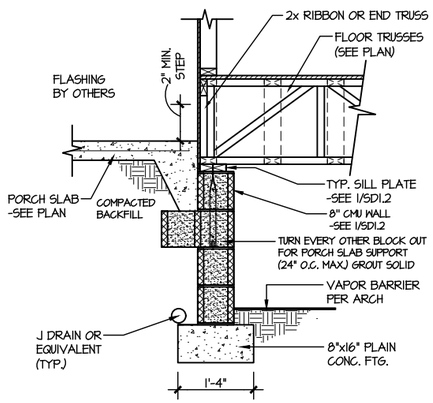

5 TYPICAL CRAWLSPACE FOUNDATION @ PORCH/PATIO SLAB
SCALE: 3/8"=1'-0"
(REFER TO DETAIL 12 FOR WOOD PORCH OPTION)

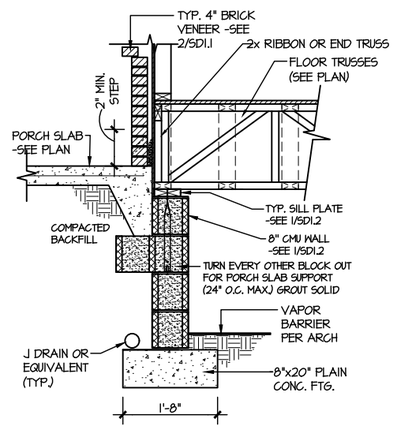

6 TYPICAL CRAWLSPACE FOUNDATION @ PORCH/PATIO SLAB
SCALE: 3/8"=1'-0" w/ BRICK VENEER

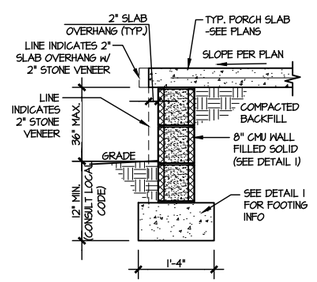

7A TYP. FOOTING @ PORCH SLAB
SCALE: 3/8"=1'-0"

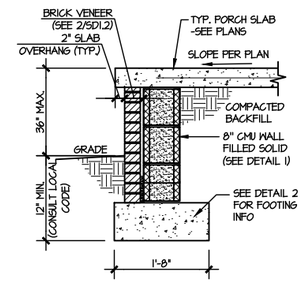

7B TYP. FOOTING @ PORCH SLAB
SCALE: 3/8"=1'-0" w/ BRICK VENEER

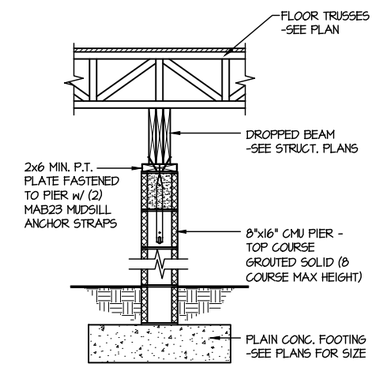

8 TYPICAL CRAWLSPACE FND. @ INTERIOR PIER
SCALE: 3/8"=1'-0"

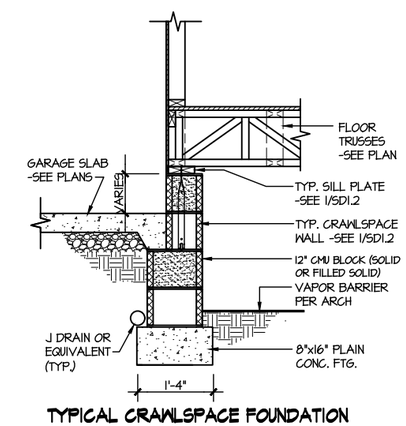

9 TYPICAL CRAWLSPACE FOUNDATION @ GARAGE
SCALE: 3/8"=1'-0"

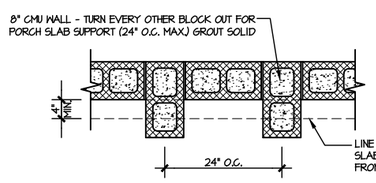

TOP VIEW OF FND. WALL @ PORCH SLAB SUPPORT

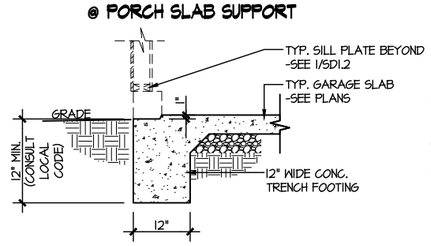

10 TYPICAL SLAB ON GRADE GARAGE ENTRY @ PERIMETER FOOTING
SCALE: 3/8"=1'-0"

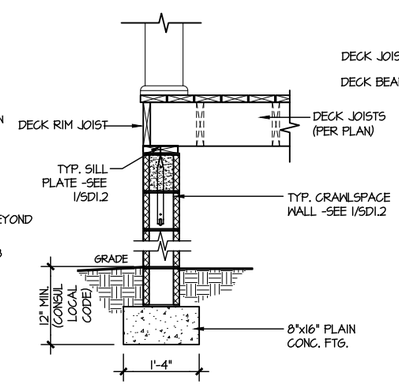

11 TYPICAL CRAWLSPACE FOUNDATION @ WOOD PORCH/DECK PERIMETER
SCALE: 3/8"=1'-0"

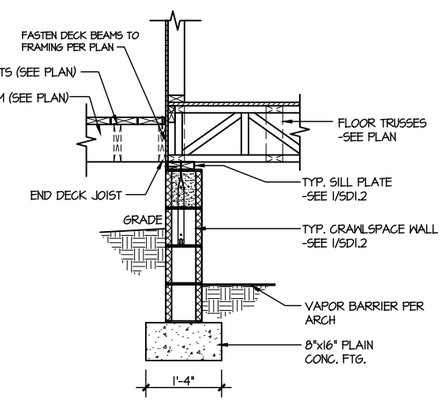

12 TYPICAL CRAWLSPACE FOUNDATION @ WOOD PORCH/DECK
SCALE: 3/8"=1'-0"

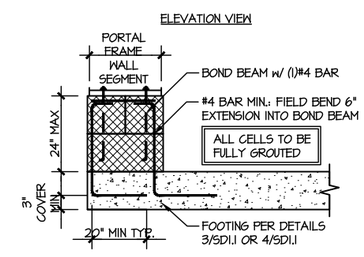

A GARAGE PORTAL FRAME STEM WALL REINFORCEMENT
SCALE: 3/8"=1'-0"

seal: 6/2/25

NORTH CAROLINA PROFESSIONAL SEAL 036012 ENGINEER JOSEPH T. RICKER

MULHERN+KULP
RESIDENTIAL STRUCTURAL ENGINEERING
5000 Reynolds Ave, Building 4 • Ambler, PA 19002
P: 215-646-8001 • mulhernkulp.com
NC LIC. #C-3825

M&K project number: 126-23047

project mgr: JTR
drawn by: GTK
issue date: 05-29-25

REVISIONS:
date: initial:

DRB HOMES

FOUNDATION DETAILS
HONEYCUTT HILLS
LOT 39 - STONEFIELD 2
RALEIGH, NC

sheet: SD1.2

FILE: RLH - Honeycutt Hills - Lot 39 - Structurals DATE: 6/2/2025 7:14 AM

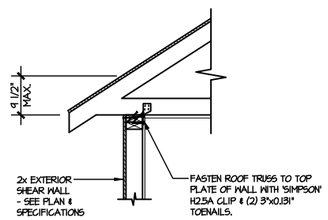

A1 TYPICAL SHEAR TRANSFER DETAIL @ ROOF

SCALE: 3/8"=1'-0" HEEL HEIGHT LESS THAN 9 ½" NO BLOCKING REQ'D

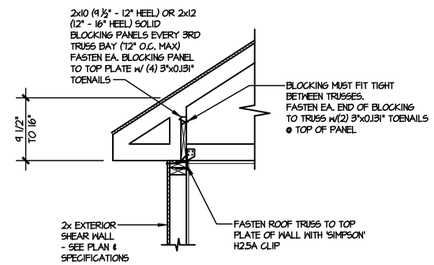

A2 TYPICAL SHEAR TRANSFER DETAIL @ ROOF

SCALE: 3/8"=1'-0" HEEL HEIGHT BETWEEN 9 ½" - 16" BLOCKING REQ'D

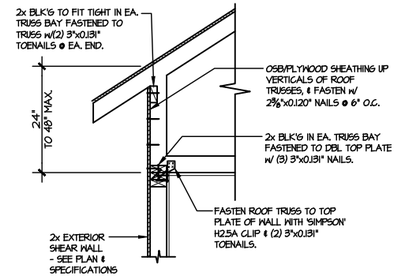

A3 TYPICAL SHEAR TRANSFER DETAIL @ RAISED HEEL TRUSS

SCALE: 3/8"=1'-0" HEEL HEIGHT UP TO 48" MAX.

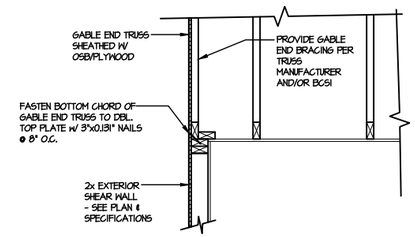

B TYPICAL GABLE END DETAIL

SCALE: 3/8"=1'-0"

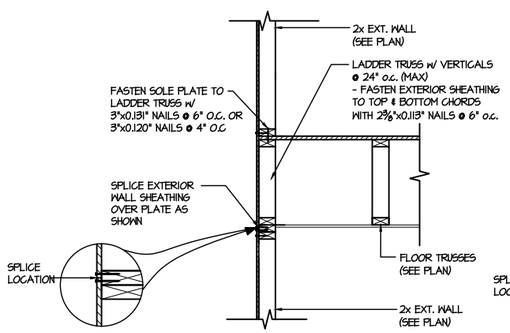

C1 TYPICAL SHEAR TRANSFER DETAIL BETWEEN FLOORS @ EXTERIOR WALL

SCALE: 3/8"=1'-0" PARALLEL FRMG

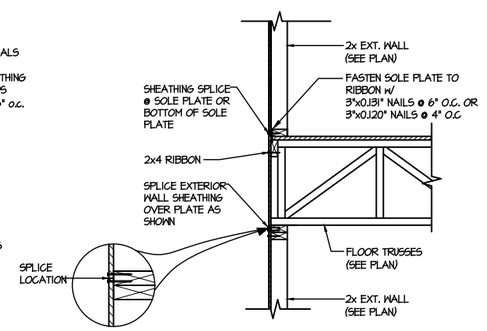

C2 TYPICAL SHEAR TRANSFER DETAIL BETWEEN FLOORS @ EXTERIOR WALL

SCALE: 3/8"=1'-0" PERPENDICULAR FRMG

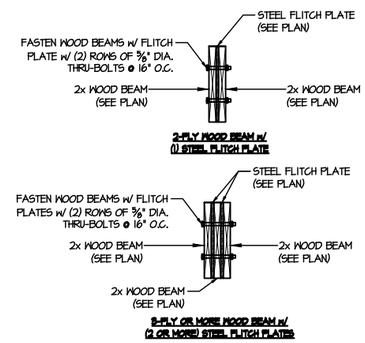

D TYPICAL FLITCH BEAM CONNECTION DETAIL

SCALE: 3/4"=1'-0"

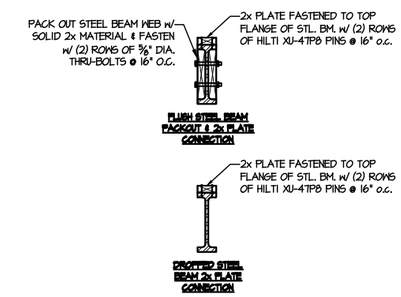

E TYPICAL STEEL BEAM CONNECTION DETAIL

SCALE: 3/4"=1'-0"

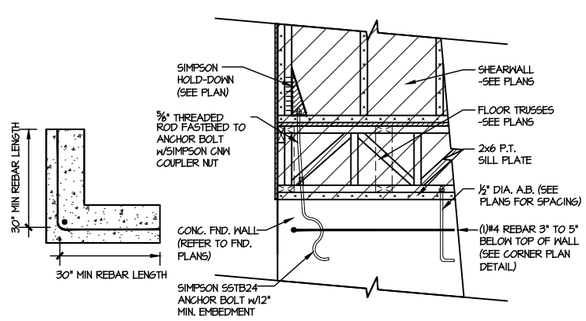

F2 TYPICAL CORNER FOUNDATION HOLD-DOWN INSTALLATION

SCALE: N.T.S.

LETTERED DETAILS ARE TYPICAL FOR THIS HOME & SHALL BE IMPLEMENTED IN ALL APPLICABLE AREAS. THESE DETAILS ARE NOT "CUT" ON THE PLANS.	NUMBERED DETAILS ARE PLAN SPECIFIC AND ARE ONLY REQUIRED WHERE SPECIFICALLY INDICATED ("CUT") ON THE PLANS.

seal: 6/2/25

NORTH CAROLINA PROFESSIONAL SEAL 036012 ENGINEER JOSEPH T. RICKER

MULHERN+KULP
RESIDENTIAL STRUCTURAL ENGINEERING
5000 Reynolds Ave, Building 4 - Ambler, PA 19002
P: 215-646-8001 - mulhernkulp.com
NC LIC. #C-3825

M&K project number: 126-23047

project mgr: JTR
drawn by: GTK
issue date: 05-29-25

REVISIONS:

date:	initial:

DRB HOMES

FRAMING DETAILS

HONEYCUTT HILLS
LOT 39 - STONEFIELD 2
RALEIGH, NC

sheet: SD2.0

FILE: RLH - Honeycutt Hills - Lot 39 - Structurals DATE: 6/2/2025 7:14 AM

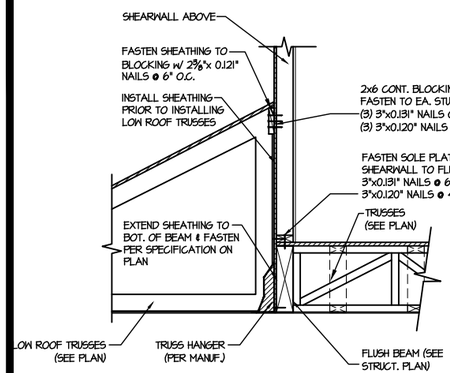

1 SHEAR TRANSFER DETAIL @ EXTERIOR SHEARWALL ABOVE

SCALE: 3/4"=1'-0"

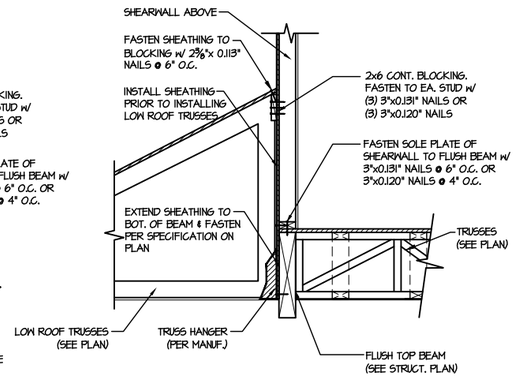

2 SHEAR TRANSFER DETAIL @ EXTERIOR SHEARWALL ABOVE

SCALE: 3/4"=1'-0"

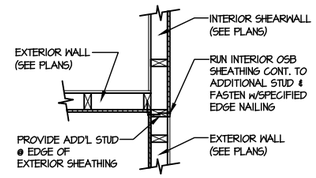

3 SHEAR TRANSFER DETAIL @ INTERSECTING INT. SHEARWALL

SCALE: 3/4"=1'-0" SHTG. OPPOSITE FACES

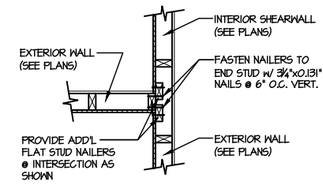

4 SHEAR TRANSFER DETAIL @ INTERSECTING INT. SHEARWALL

SCALE: 3/4"=1'-0" SHTG. ON SAME FACE

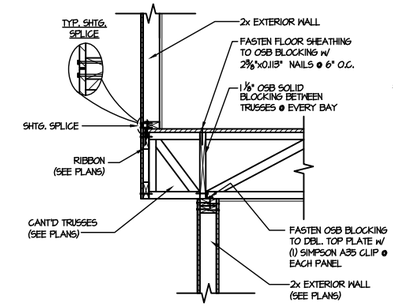

5 SHEAR TRANSFER DETAIL BETWEEN FLOORS @ CANT'D EXT. WALL

SCALE: 3/4"=1'-0" PERPENDICULAR FRAMING

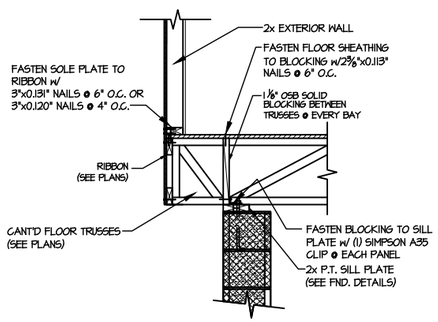

6 SHEAR TRANSFER DETAIL @ CANT'D EXTERIOR WALL

SCALE: 3/4"=1'-0"

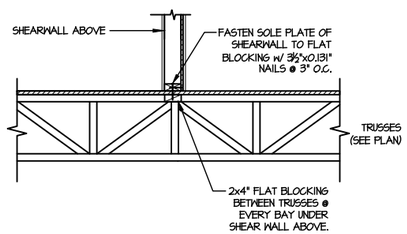

7 SHEAR TRANSFER DETAIL @ INTERIOR SHEARWALL ABOVE

SCALE: 3/4"=1'-0" PERPENDICULAR FRAMING

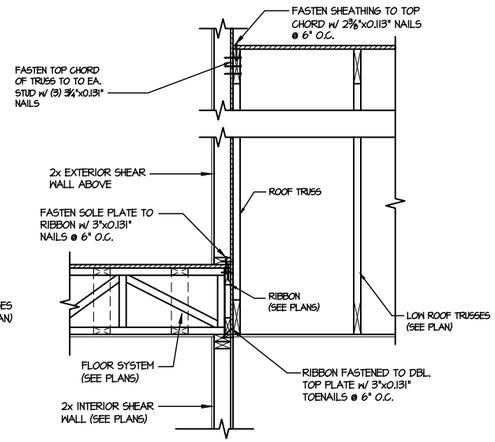

8 TYPICAL SHEAR TRANSFER DETAIL BETWEEN FLOORS @ INTERIOR WALL

SCALE: 3/4"=1'-0"

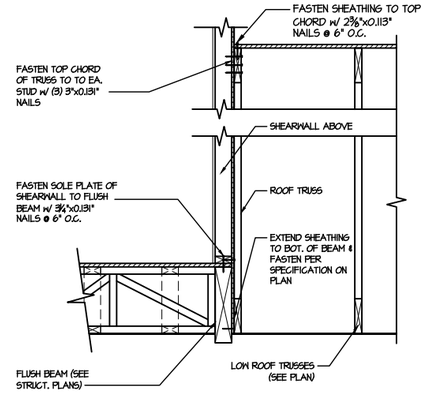

9 SHEAR TRANSFER DETAIL @ EXTERIOR SHEARWALL ABOVE

SCALE: 3/4"=1'-0"

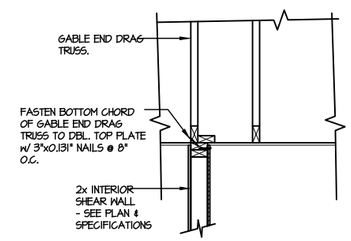

10 INTERIOR GABLE END DETAIL

SCALE: 3/4"=1'-0"

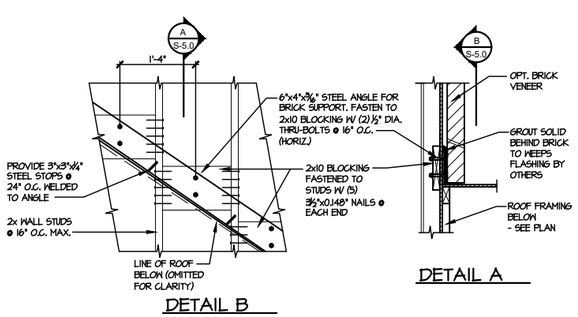

11 DETAIL SUPPORT OF BRICK VENEER

SCALE: 3/4"=1'-0"

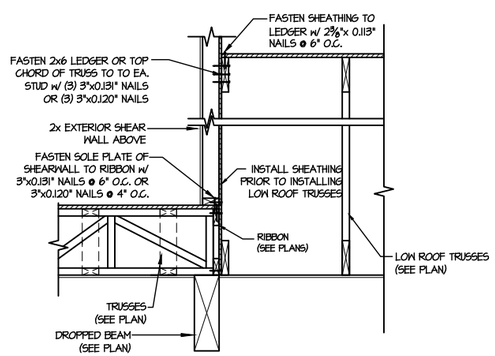

12 TYPICAL SHEAR TRANSFER DETAIL BETWEEN FLOORS @ INTERIOR WALL

SCALE: 3/4"=1'-0"

FILE: RLH - Honeycutt Hills - Lot 39 - Structurals DATE: 6/2/2025 7:14 AM

seal: 6/2/25

NORTH CAROLINA PROFESSIONAL SEAL 036012 ENGINEER JOSEPH T. RICKER

MULHERN+KULP
RESIDENTIAL STRUCTURAL ENGINEERING
5000 Reynolds Ave, Building 4 - Ambler, PA 19002
P: 215-646-8001 - mulhernkulp.com
NC LIC. #C-3825

M&K project number: 126-23047

project mgr: JTR
drawn by: GTK
issue date: 05-29-25

REVISIONS:
date: initial:

DRB HOMES

FRAMING DETAILS
HONEYCUTT HILLS
LOT 39 - STONEFIELD 2
RALEIGH, NC

sheet: SD2.1A

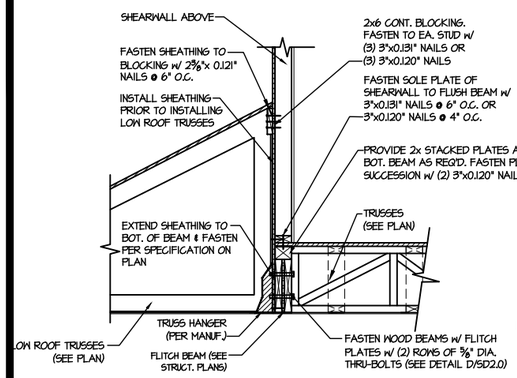

1 SHEAR TRANSFER DETAIL @ EXTERIOR SHEARWALL ABOVE

SCALE: 3/4"=1'-0"

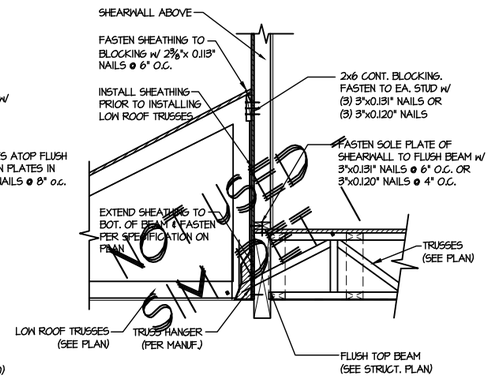

2 SHEAR TRANSFER DETAIL @ EXTERIOR SHEARWALL ABOVE

SCALE: 3/4"=1'-0"

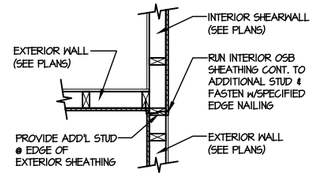

3 SHEAR TRANSFER DETAIL @ INTERSECTING INT. SHEARWALL

SCALE: 3/4"=1'-0" SHTS. OPPOSITE FACES

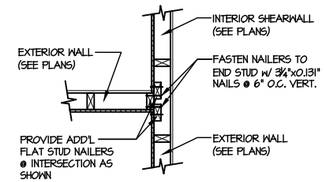

4 SHEAR TRANSFER DETAIL @ INTERSECTING INT. SHEARWALL

SCALE: 3/4"=1'-0" SHTS. ON SAME FACE

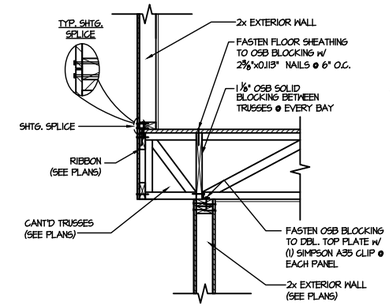

5 SHEAR TRANSFER DETAIL BETWEEN FLOORS @ CANT'D EXT. WALL

SCALE: 3/4"=1'-0" PERPENDICULAR FRAMING

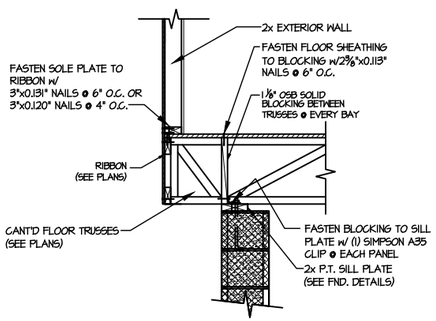

6 SHEAR TRANSFER DETAIL @ CANT'D EXTERIOR WALL

SCALE: 3/4"=1'-0"

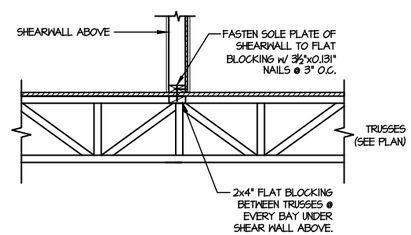

7 SHEAR TRANSFER DETAIL @ INTERIOR SHEARWALL ABOVE

SCALE: 3/4"=1'-0" PERPENDICULAR FRAMING

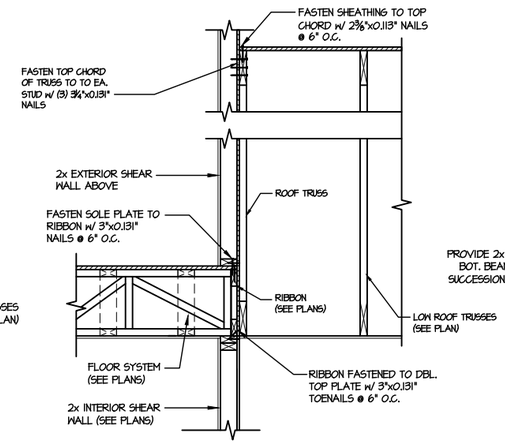

8 TYPICAL SHEAR TRANSFER DETAIL BETWEEN FLOORS @ INTERIOR WALL

SCALE: 3/4"=1'-0"

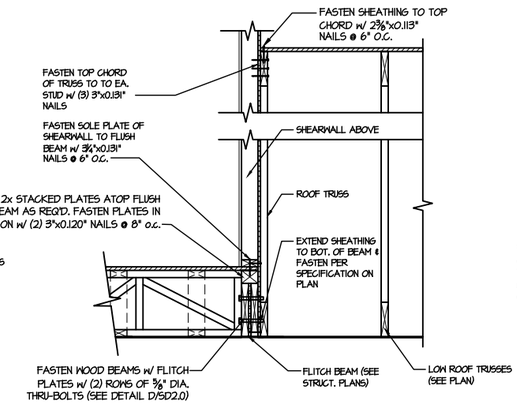

9 SHEAR TRANSFER DETAIL @ EXTERIOR SHEARWALL ABOVE

SCALE: 3/4"=1'-0"

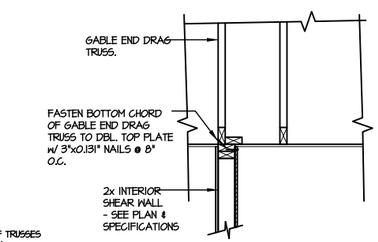

10 INTERIOR GABLE END DETAIL

SCALE: 3/4"=1'-0"

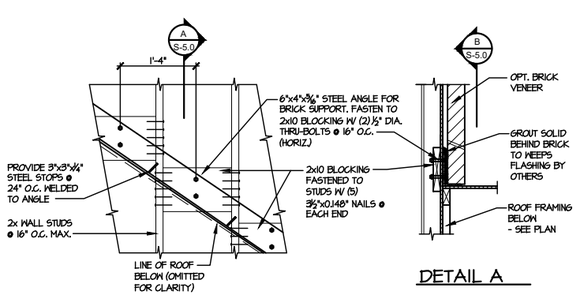

11 DETAIL SUPPORT OF BRICK VENEER

SCALE: 3/4"=1'-0"

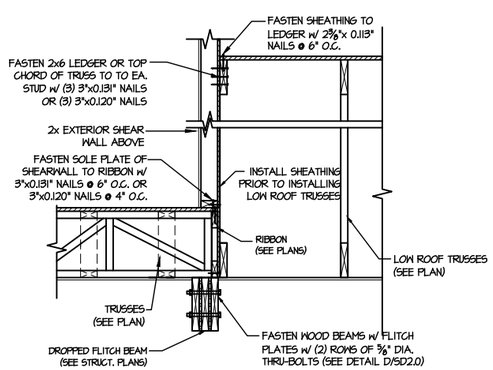

12 TYPICAL SHEAR TRANSFER DETAIL BETWEEN FLOORS @ INTERIOR WALL

SCALE: 3/4"=1'-0"

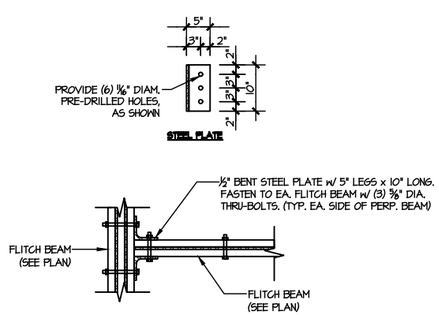

13 TYPICAL FLITCH BEAM TO FLITCH BEAM CONNECTION DETAIL

SCALE: 3/4"=1'-0"

seal: 6/2/25

NORTH CAROLINA PROFESSIONAL SEAL 036012 ENGINEER JOSEPH T. RICKER

MULHERN+KULP
RESIDENTIAL STRUCTURAL ENGINEERING
5500 Reynolds Ave, Building 4 • Ambler, PA 19002
P: 215-646-8001 • mulhernkulp.com
NC LIC. #C-3825

M&K project number: 126-23047

project mgr: JTR
drawn by: GTK
issue date: 05-29-25

REVISIONS:
date: initial:

DRB HOMES

FRAMING DETAILS
HONEYCUTT HILLS
LOT 39 - STONEFIELD 2
RALEIGH, NC

sheet: SD2.1B

FILE: RLH - Honeycutt Hills - Lot 39 - Structurals DATE: 6/2/2025 7:14 AM

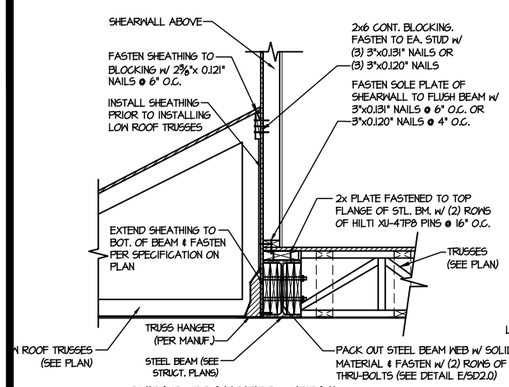

1 SHEAR TRANSFER DETAIL @ EXTERIOR SHEARWALL ABOVE

SCALE: 3/4"=1'-0"

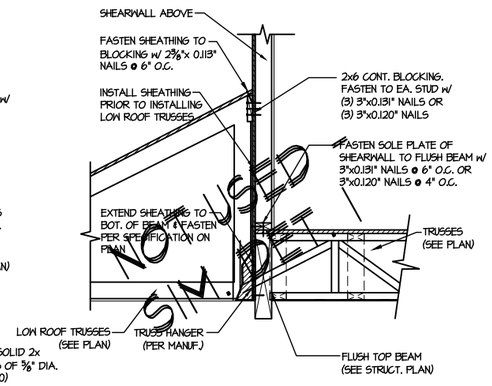

2 SHEAR TRANSFER DETAIL @ EXTERIOR SHEARWALL ABOVE

SCALE: 3/4"=1'-0"

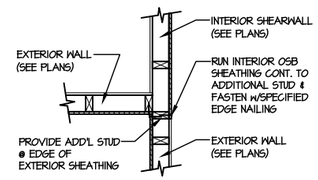

3 SHEAR TRANSFER DETAIL @ INTERSECTING INT. SHEARWALL

SCALE: 3/4"=1'-0" SHTG. OPPOSITE FACES

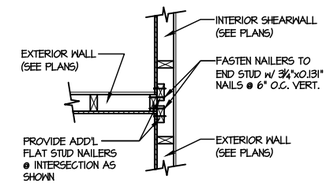

4 SHEAR TRANSFER DETAIL @ INTERSECTING INT. SHEARWALL

SCALE: 3/4"=1'-0" SHTG. ON SAME FACE

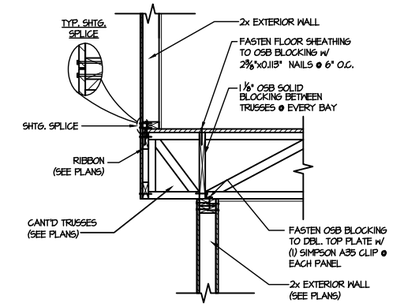

5 SHEAR TRANSFER DETAIL BETWEEN FLOORS @ CANT'D EXT. WALL

SCALE: 3/4"=1'-0" PERPENDICULAR FRAMING

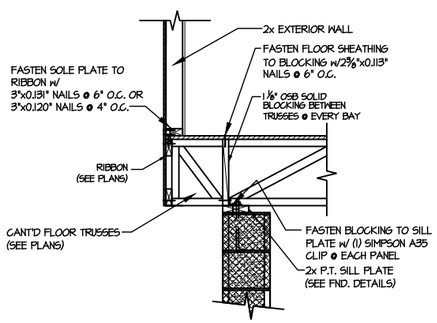

6 SHEAR TRANSFER DETAIL @ CANT'D EXTERIOR WALL

SCALE: 3/4"=1'-0"

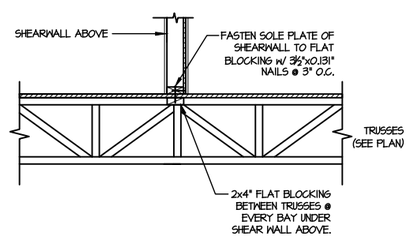

7 SHEAR TRANSFER DETAIL @ INTERIOR SHEARWALL ABOVE

SCALE: 3/4"=1'-0" PERPENDICULAR FRAMING

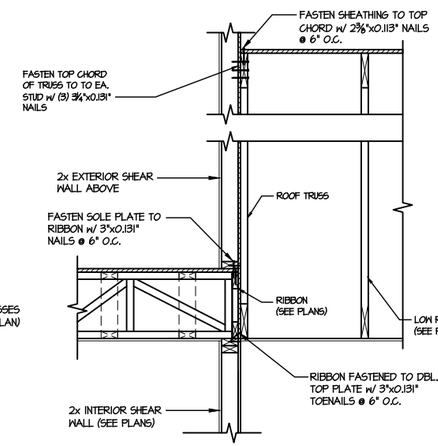

8 TYPICAL SHEAR TRANSFER DETAIL BETWEEN FLOORS @ INTERIOR WALL

SCALE: 3/4"=1'-0"

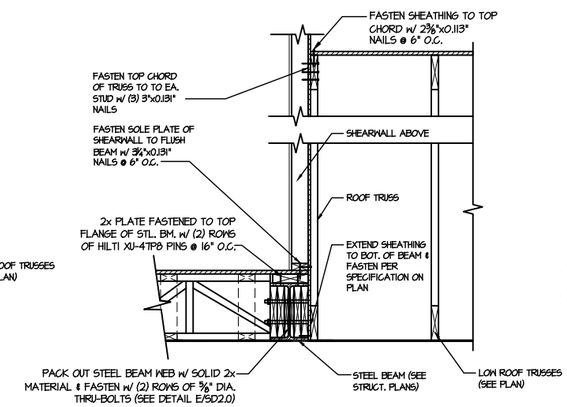

9 SHEAR TRANSFER DETAIL @ EXTERIOR SHEARWALL ABOVE

SCALE: 3/4"=1'-0"

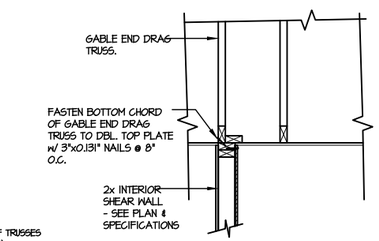

10 INTERIOR GABLE END DETAIL

SCALE: 3/4"=1'-0"

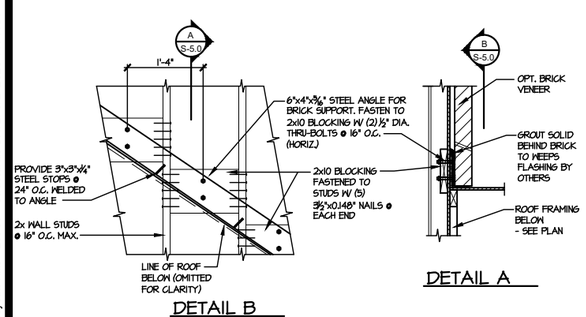

11 DETAIL SUPPORT OF BRICK VENEER

SCALE: 3/4"=1'-0"

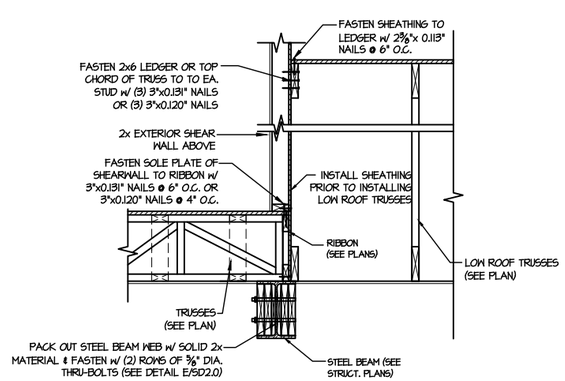

12 TYPICAL SHEAR TRANSFER DETAIL BETWEEN FLOORS @ INTERIOR WALL

SCALE: 3/4"=1'-0"

seal: 6/2/25

NORTH CAROLINA PROFESSIONAL SEAL 036012 ENGINEER JOSEPH T. RICKER

MULHERN+KULP
RESIDENTIAL STRUCTURAL ENGINEERING
5000 Brookside Ave, Building 4 • Ambler, PA 19002
P: 215-646-8001 • mulkul@gmail.com
NC LIC. #C-3825

M&K project number: 126-23047

project mgr: JTR
drawn by: GTK
issue date: 05-29-25

REVISIONS:
date: initial:

DRB HOMES

FRAMING DETAILS

HONEYCUTT HILLS
LOT 39 - STONEFIELD 2
RALEIGH, NC

sheet: SD2.1C

FILE: RLH - Honeycutt Hills - Lot 39 - Structurals DATE: 6/2/2025 7:14 AM

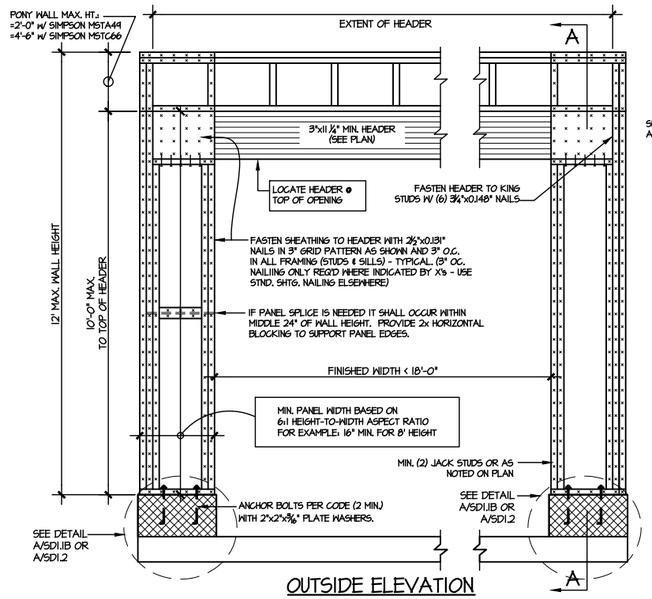

OUTSIDE ELEVATION

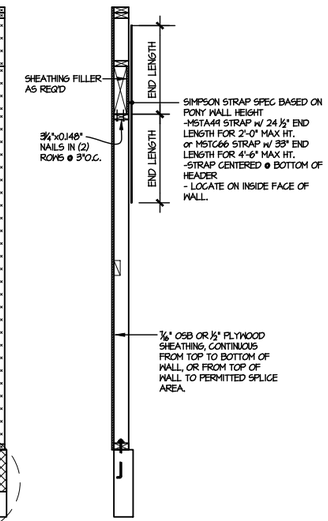

SECTION A-A THROUGH PIER

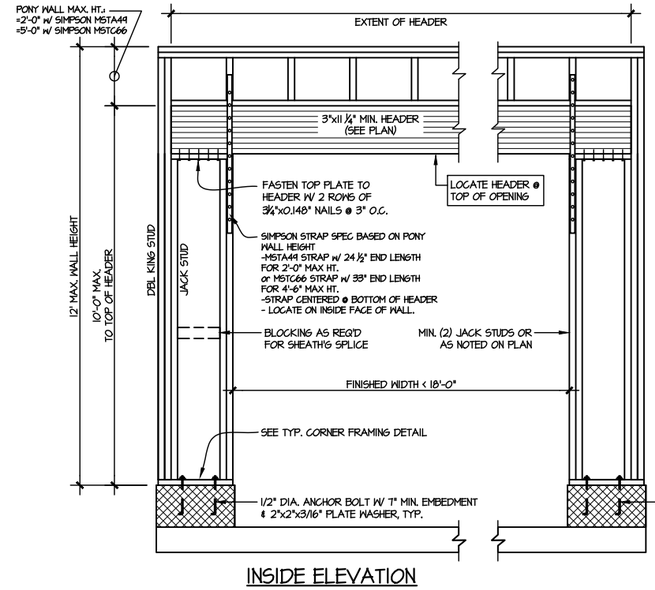

NOTE: ALL SHEATHABLE AREAS OF EXTERIOR WALL SHALL BE FULLY SHEATHED WITH 1/2" PLYWOOD OR 7/16" OSB

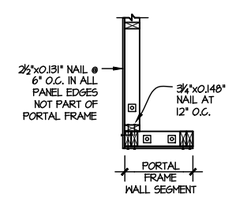

PLAN VIEW OF CORNER DETAIL

ALTERNATIVE TO 1/2" DIA. ANCHOR BOLT:
1) 1/2" DIA. THREADED ROD EPOXY SET W/4 1/2" EMBED. (MIN) UTILIZING HILTI HY200 EPOXY ANCHORING SYSTEM (OR EQUAL)

INSIDE ELEVATION

1 TWO SIDED GARAGE PORTAL FRAME BRACING ELEVATION ON CMU STEM

SCALE: N.T.S.

seal: 6/2/25

NORTH CAROLINA PROFESSIONAL SEAL 036012 ENGINEER JOSEPH T. RICKER

MULHERN+KULP
RESIDENTIAL STRUCTURAL ENGINEERING
3000 Rosemont Ave, Building 4 • Ambler, PA 19002
P: 215-646-8001 • mulhernkulp.com
NC LIC. #C-3825

M&K project number: 126-23047

project mgr: JTR
drawn by: GTK
issue date: 05-29-25

REVISIONS:
date: initial:

DRB HOMES

FRAMING DETAILS
HONEYCUTT HILLS
LOT 39 - STONEFIELD 2
RALEIGH, NC

sheet: SD2.2

FILE: RLH - Honeycutt Hills - Lot 39 - Structurals DATE: 6/2/2025 7:14 AM

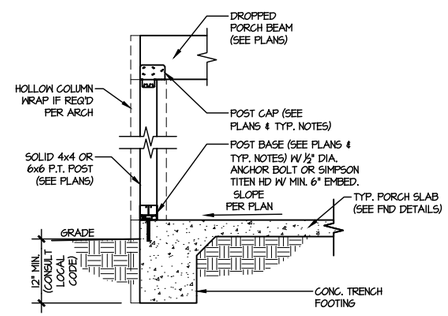

3 TYPICAL PORCH POST CONNECTION DETAIL

SCALE: NONE

SLAB ON GRADE SHOWN (SIM. @ CRAWL & BSMT.)

seal: 6/2/25

NORTH CAROLINA PROFESSIONAL SEAL 036012 ENGINEER JOSEPH T. RICKER

MULHERN+KULP
RESIDENTIAL STRUCTURAL ENGINEERING
3000 Rosemont Ave, Building 4 • Ambler, PA 19002
P: 215-646-8001 • mulhernkulp.com
NC LIC. #C-3825

M&K project number: 126-23047

project mgr: JTR
drawn by: GTK
issue date: 05-29-25

REVISIONS:

date:	initial:

DRB HOMES

FRAMING DETAILS

HONEYCUTT HILLS
LOT 39 - STONEFIELD 2
RALEIGH, NC

sheet: SD3.0

FILE: RLH - Honeycutt Hills - Lot 39 - Structurals DATE: 6/2/2025 7:14 AM

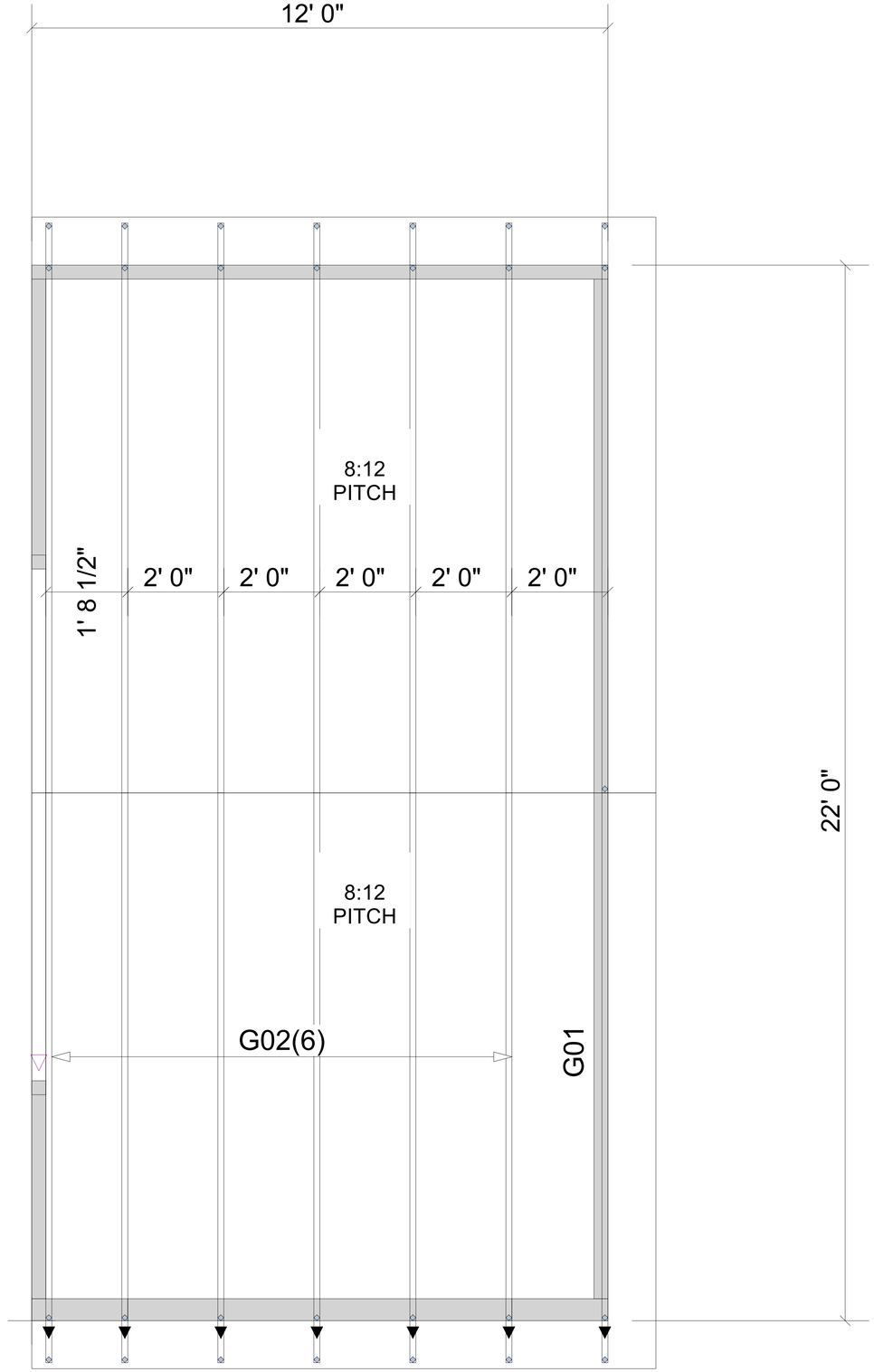

GARAGE HEADER BY BUILDER PER ENG

FOR PERMIT

▲= LEFT END OF TRUSS

REVISIONS:

ROOF

Client: DRB GROUP-RALEIGH

Job: LOT 0.0039 HONEYCUTT HILL

Plan Information: STONEFIELD-2

NOT TO SCALE

Date: 05/22/25

Drawn By: CGT

Job #: 25-4772-R01

Sales Rep: KYLE GIBSON

Phone:

Moncks Corner/Easley, SC (800) 475-3999
Sparta, NC (336) 372-2226

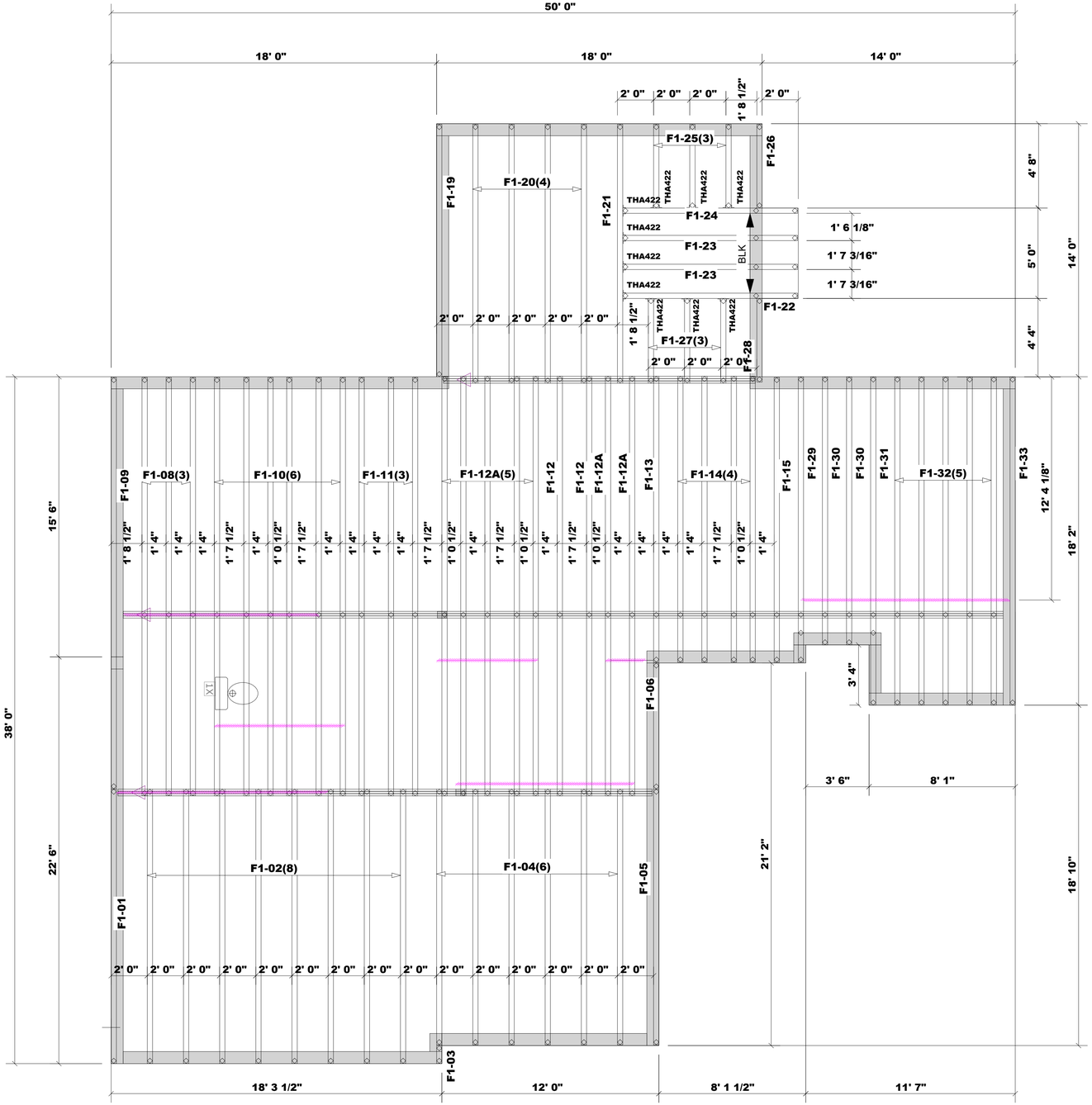

Products				
PlotID	Length	Product	Plies	Net Qty
Blk1	2' 0"	1-1/8" x 11-7/8" BC RIM BOARD OSB	1	3

Truss Connector Total List		
Manuf	Product	Qty
	THA422	10

FOR PERMIT

▲= LEFT END OF TRUSS

REVISIONS:

FLOOR

Client: DRB GROUP-RALEIGH

Job: LOT 0.0039 HONEYCUTT HILL

Plan Information: STONEFIELD-2

NOT TO SCALE

Drawn By: CGT

Date: 05/22/25

Job #: 25-4772-F01

Sales Rep: KYLE GIBSON
Phone: 864-304-3282

ATLANTIC
Moncks Corner/Easley, SC (800) 475-3999
Sparta, NC (336) 372-2226

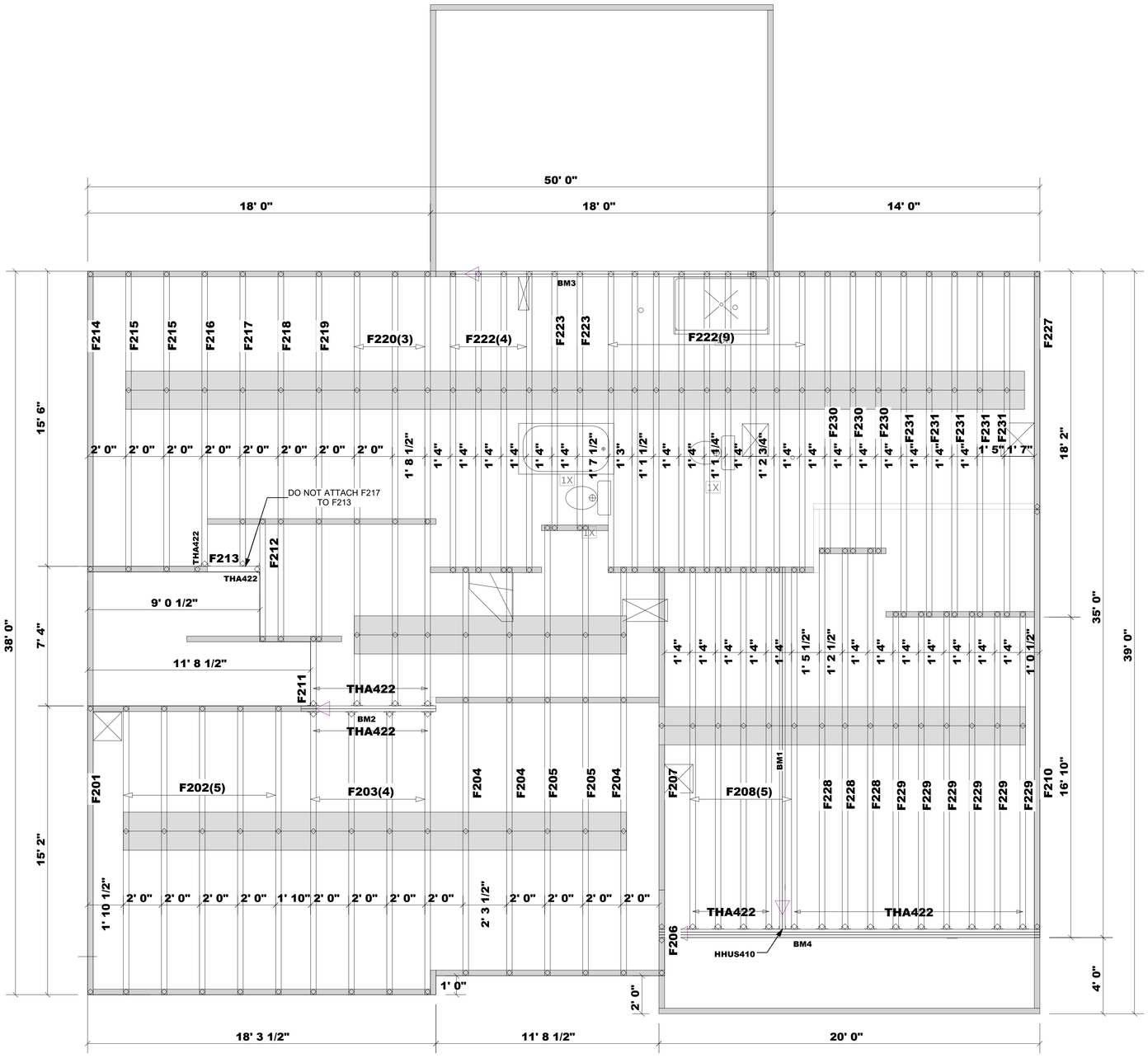

Products					
PlotID	Length	Product	Plies	Net Qty	Fab Type
BM1	20' 0"	1-3/4" x 14" VERSA-LAM® 2.0 3100 SP	2	2	MFD
BM2	8' 0"	1-3/4" x 14" VERSA-LAM® 2.0 3100 SP	2	2	MFD
BM3	16' 0"	1-3/4" x 16" VERSA-LAM® 2.0 3100 SP	2	2	MFD
BM4	20' 0"	1-3/4" x 18" VERSA-LAM® 2.0 3100 SP	3	3	MFD

Truss Connector Total List		
Manuf	Product	Qty
Simpson	THA422	24

Connector Summary			
Qty	Manuf	Product	Flange
1	Simpson	HHUS410	None

FOR PERMIT

ROOF

Client: DRB GROUP-RALEIGH

Job: LOT 0.0039 HONEYCUTT HILL

Plan Information: STONEFIELD-2

NOT TO SCALE

Date: 1-11-17

Drawn By: CGT

Job #: 25-4772-F02

Sales Rep: KYLE GIBSON
Phone: 843-729-3249

ATLANTIC
1998 Cane Gully Road, Moncks Corner SC 29461
Phone: (800) 475-3999 Fax (843) 565-3193
Web: www.atlanticbcs.com

2x4 ledger (by others) fastened to truss end verticals per detail 5 on sheet S5.0T.

Extreme care must be taken to not set any of these trusses backwards.

Truss Connector Total List		
Manuf	Product	Qty
Simpson	HTU26	6
Simpson	HTU28	8
Simpson	LUS26	9

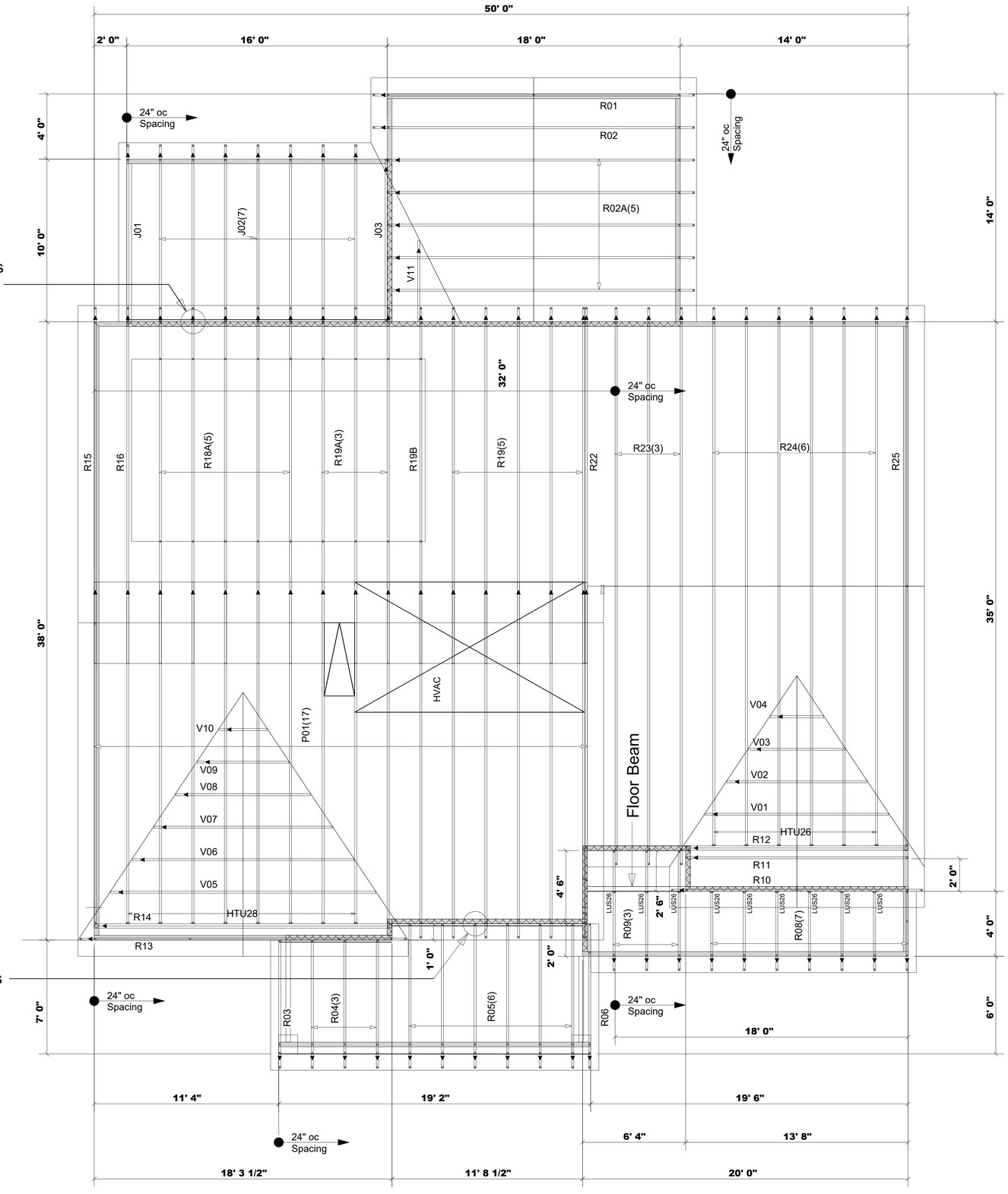

WARNING! Long span trusses, 60' or greater in length, require extreme care and experience for proper and safe handling and installation. For general handling and installation guidance, see the "Guide to Good Practice for Handling, Installing, Restraining & Bracing of Metal Plate Connected Wood Trusses ("BCSI"), JOINTLY PRODUCED BY SBCA and TPI. For project specific guidance, consult with a registered design professional. ATLANTIC assumes no responsibility for the handling, installation or bracing of trusses.

FOR PERMIT

ROOF

Client: DRB GROUP-RALEIGH

Job: LOT 0.0039 HONEYCUTT HILL

Plan Information: STONEFIELD-2

Date: 05/22/25

NOT TO SCALE

Job #: 25-4772-R01

Sales Rep: KYLE GIBSON

Drawn By: CGT

Phone:

◀= LEFT END OF TRUSS

REVISIONS:

ATLANTIC

Moncks Corner/Easley, SC (800) 475-3999
Sparta, NC (336) 372-2226