Elevation A - Sheet List	
Sheet Number	Sheet Name
Pg1	Front & Rear Elevations
Pg2	Side Elevations
Pg3	1st Floor Plan
Pg4	Roof Plan
Pg5	Building Section
Pg6	Electrical & Flooring
Sec-Crawl/Blk 1flr	Typical Wall Section
Structural Pages	by Engineer

1 Front - Elev A
1/8" = 1'-0"

2 Rear - Elev A
1/8" = 1'-0"

Area Schedule (Elevation A)	
Name	Area
Heated	
1st Floor	1323 SF
	1323 SF
Unheated	
Front Porch	50 SF
Garage	240 SF
Screened Porch	134 SF
	424 SF
Under Roof	1747 SF

ValueBuild HOMES
3015 Jefferson Davis Hwy, Sanford, NC 27332

CYPRESS - Elevation A

Front & Rear Elevations

Value Series

Job #: 25-FAY-SAN-019
Address: 1129 Holder Rd Lillington, NC 27546
County: Harnett County

Plan Version Date: 10-4-24

Job Version Date: 6-6-25

Sheet #: Pg1

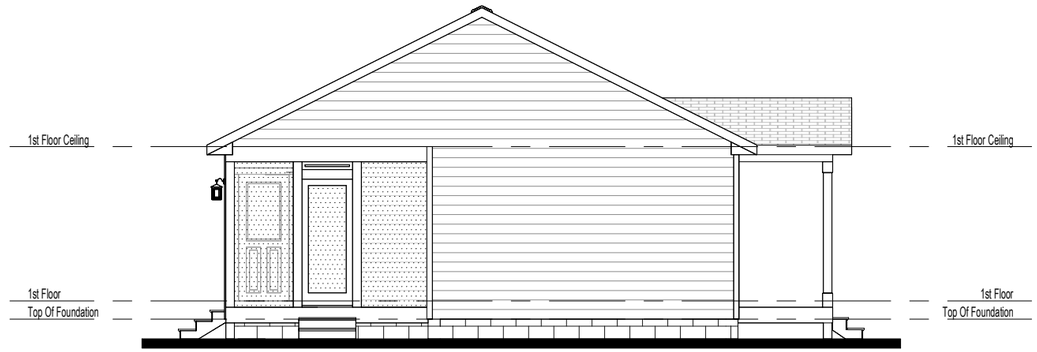

1 Left - Elev A
1/8" = 1'-0"

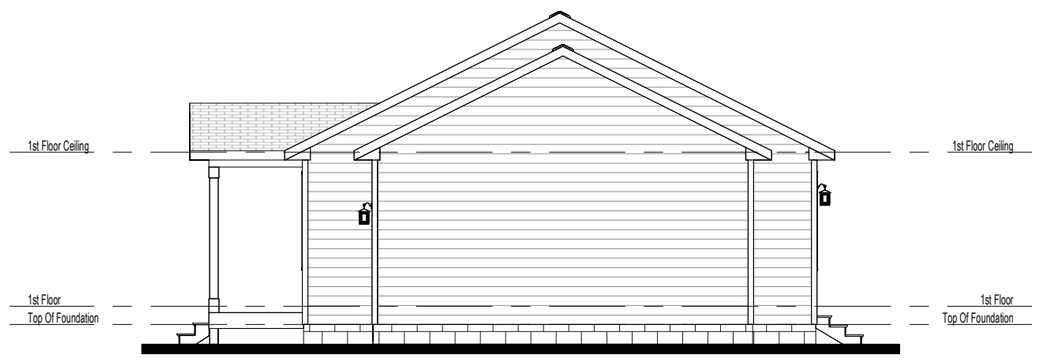

2 Right - Elev A
1/8" = 1'-0"

ValueBuild HOMES
3015 Jefferson Davis Hwy, Sanford, NC 27332

CYPRESS - Elevation A

Side Elevations

Value Series

Job #: 25-FAY-SAN-019
Address: 1129 Holder Rd
Lillington, NC 27546
County: Harnett County

Plan Version Date:
10-4-24

Job Version Date:
6-6-25

Sheet #:
Pg2

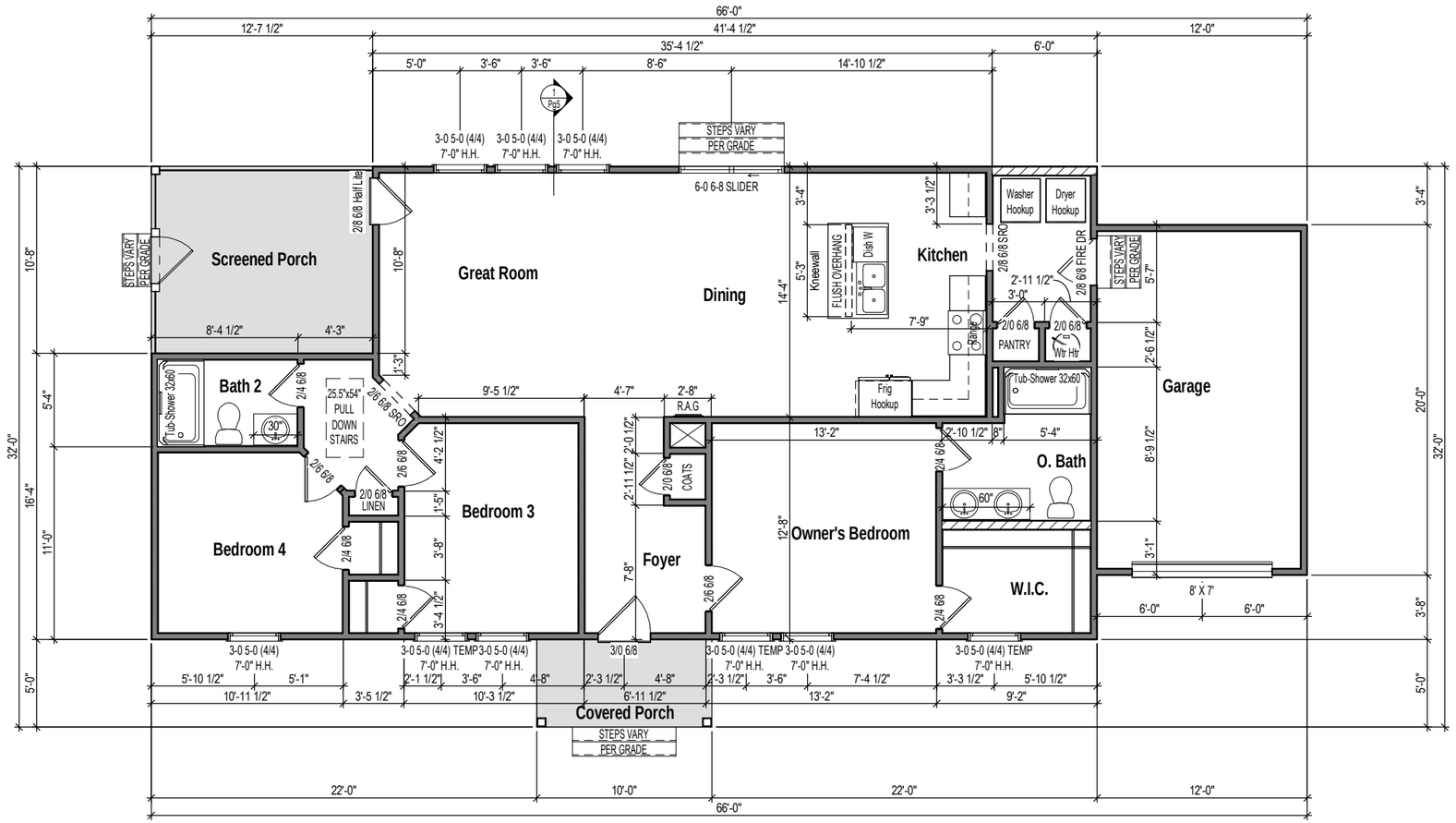

1 1st Floor Plan - Elev A
1/8" = 1'-0"

WALL STUD SIZES

= 2x4 = 2x6

DIMENSIONS

- EXTERIOR WALL DIMENSIONS ARE TO FACE OF SHEATHING
- INTERIOR WALL DIMENSIONS ARE TO FACE OF STUD

EXTERIOR DOOR ROUGH OPENINGS

- ALL EXTERIOR SWING DOORS HAVE A HEADER HEIGHT = TO 3" HIGHER THAN CALL SIZE
- ALL EXTERIOR SLIDING DOORS HAVE A HEADER HEIGHT = TO CALL SIZE

ValueBuild HOMES
3015 Jefferson Davis Hwy, Sanford, NC 27332

CYPRESS - Elevation A

1st Floor Plan

Value Series

Job #: 25-FAY-SAN-019
Address: 1129 Holder Rd Lillington, NC 27546
County: Harnett County

Plan Version Date: 10-4-24

Job Version Date: 6-6-25

Sheet #: Pg3

Attic Ventilation Calcs 1/300 (sq.in.)

Area	Ventilation Required (sq.in.)	Max Upper (sq.in.)	Min Upper (sq.in.)	Upper Ventilation (sq.in.)	Lower Ventilation (sq.in.)	Total Ventilation (sq.in.)	Ridge Vent (ln.ft.)	Roof Vents (ea)	Soffit Vents (sq.ft.)
1458 SF	700	560	350	540	588	1128	36	0	98
240 SF	115	92	58	90	144	234	6	0	24

CALCS BASED ON THE FOLLOWING VALUES
- Ridge Vents = 15 in^2 of net free area per linear foot
- Roof Vents = 50 in^2 of net free area per unit
- Soffit Vents = 6 in^2 of net free area per square foot

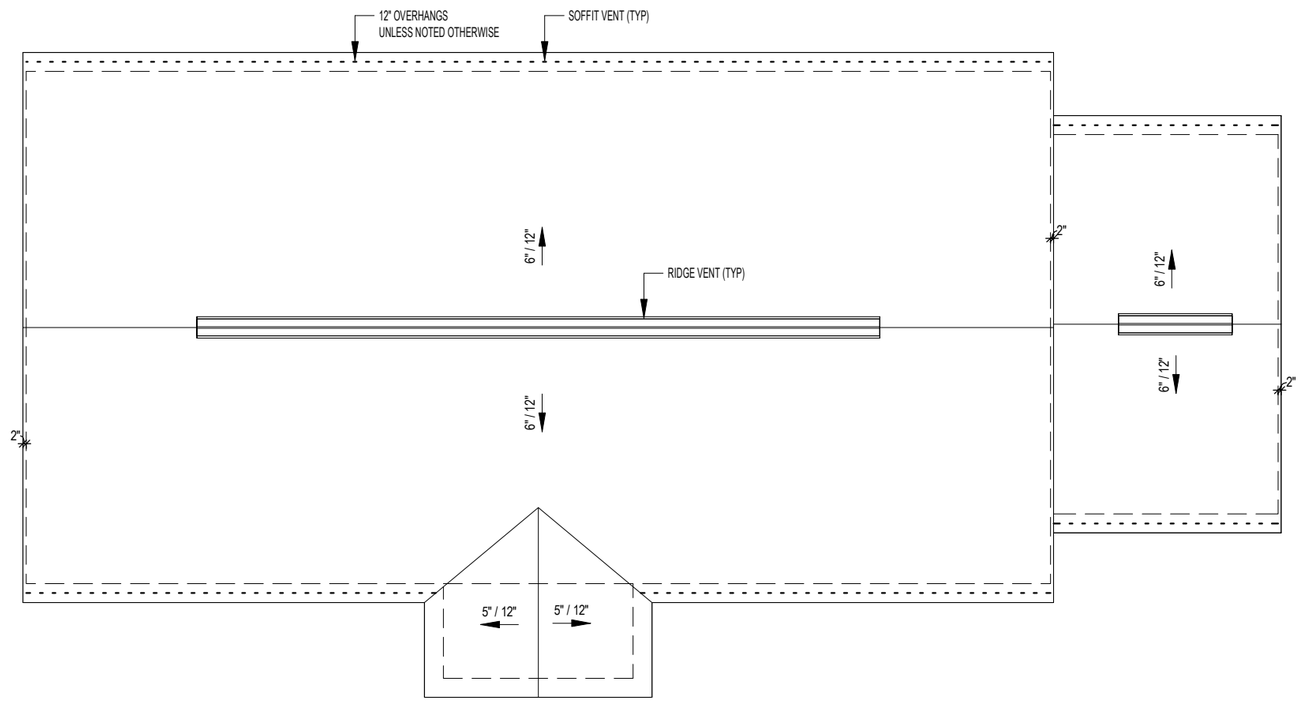

1 Roof Plan - Elev A
1/8" = 1'-0"

ValueBuild HOMES
3015 Jefferson Davis Hwy, Sanford, NC 27332

CYPRESS - Elevation A

Roof Plan

Value Series

Job #: 25-FAY-SAN-019
Address: 1129 Holder Rd
Lillington, NC 27546
County: Harnett County

Plan Version Date:
10-4-24

Job Version Date:
6-6-25

Sheet #:
Pg4

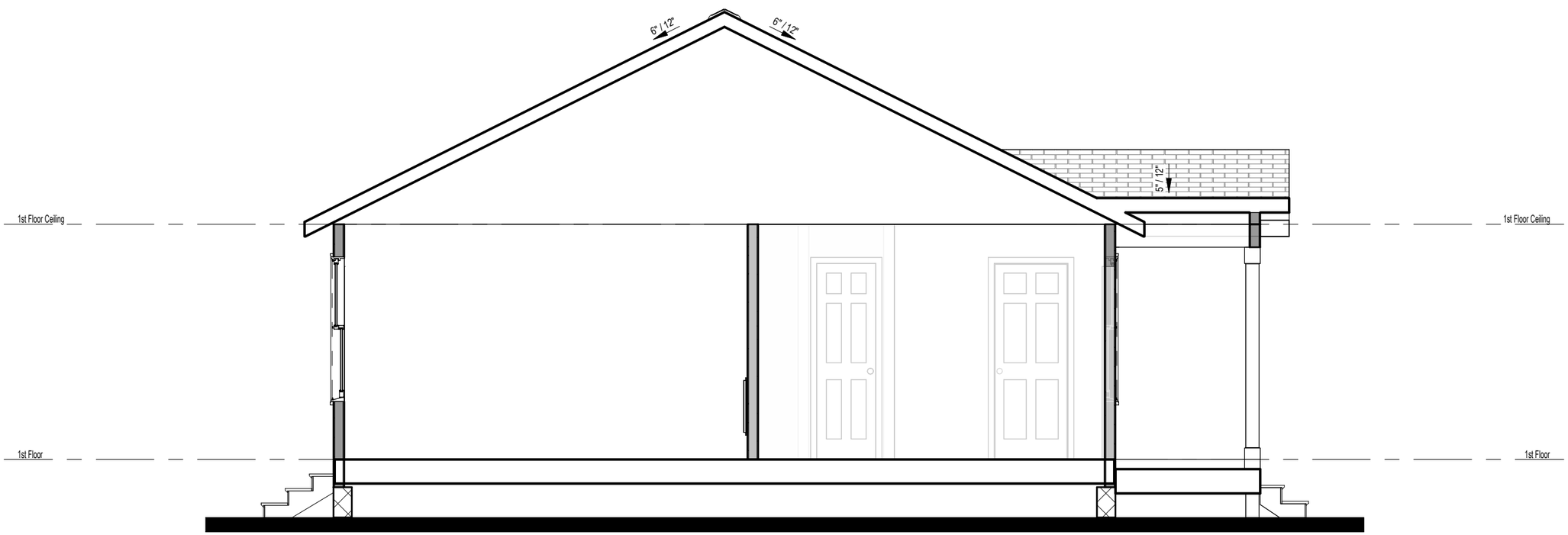

1 Building Section - Elevation A
1/4" = 1'-0"

ValueBuild HOMES
3015 Jefferson Davis Hwy, Sanford, NC 27332

CYPRESS - Elevation A

Building Section

Value Series

Job #: 25-FAY-SAN-019
Address: 1129 Holder Rd
Lillington, NC 27546
County: Harnett County

Plan Version Date:
10-4-24

Job Version Date:
6-6-25

Sheet #:
Pg5

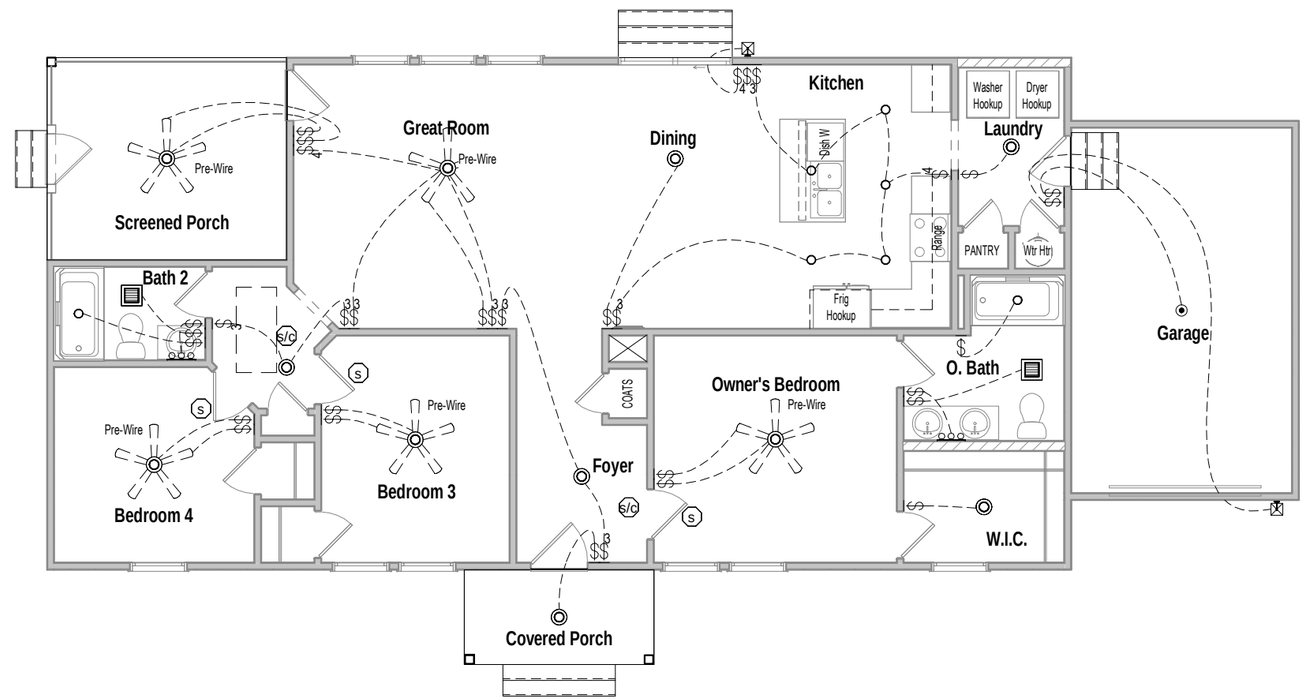

1 1st Floor Electrical - Elevation A
1/8" = 1'-0"

ELECTRICAL LEGEND

WALL MOUNTED FIXTURES			CEILING MOUNTED FIXTURES	
OUTLET - 110V	OUTLET - TV	GARAGE DOOR OPENER PREWIRE	KEYLESS	SMOKE DETECTOR
OUTLET - 110V GROUND FAULT INTERRUPTER	OUTLET - PHONE	18" LIGHT BAR	FLUSH MOUNT	SMOKE DETECTOR/CO2
OUTLET - 110V GROUND FAULT INTERRUPTER WATER PROOF	SWITCH - SINGLE POLE	COACH LIGHT - FRONT DOOR	LED PUCK	BATHROOM EXHAUST FAN
OUTLET - 220V	SWITCH - 3 WAY	COACH LIGHT - REAR DOOR	FLUSH MOUNT W-FAN PREWIRE	FLUORESCENT 4' - 2 LAMPS
	SWITCH - 4 WAY			FLUORESCENT 2' - 1 LAMP

Outlets shown on the electrical layout are in addition to the outlets that shall be provided in accordance with International Residential Code Sections E3901.2 through E3901.11.

ValueBuild HOMES
3015 Jefferson Davis Hwy, Sanford, NC 27332

CYPRESS - Elevation A

Electrical & Flooring

Value Series

Job #: 25-FAY-SAN-019
Address: 1129 Holder Rd Lillington, NC 27546
County: Harnett County

Plan Version Date: 10-4-24

Job Version Date: 6-6-25

Sheet #: Pg6

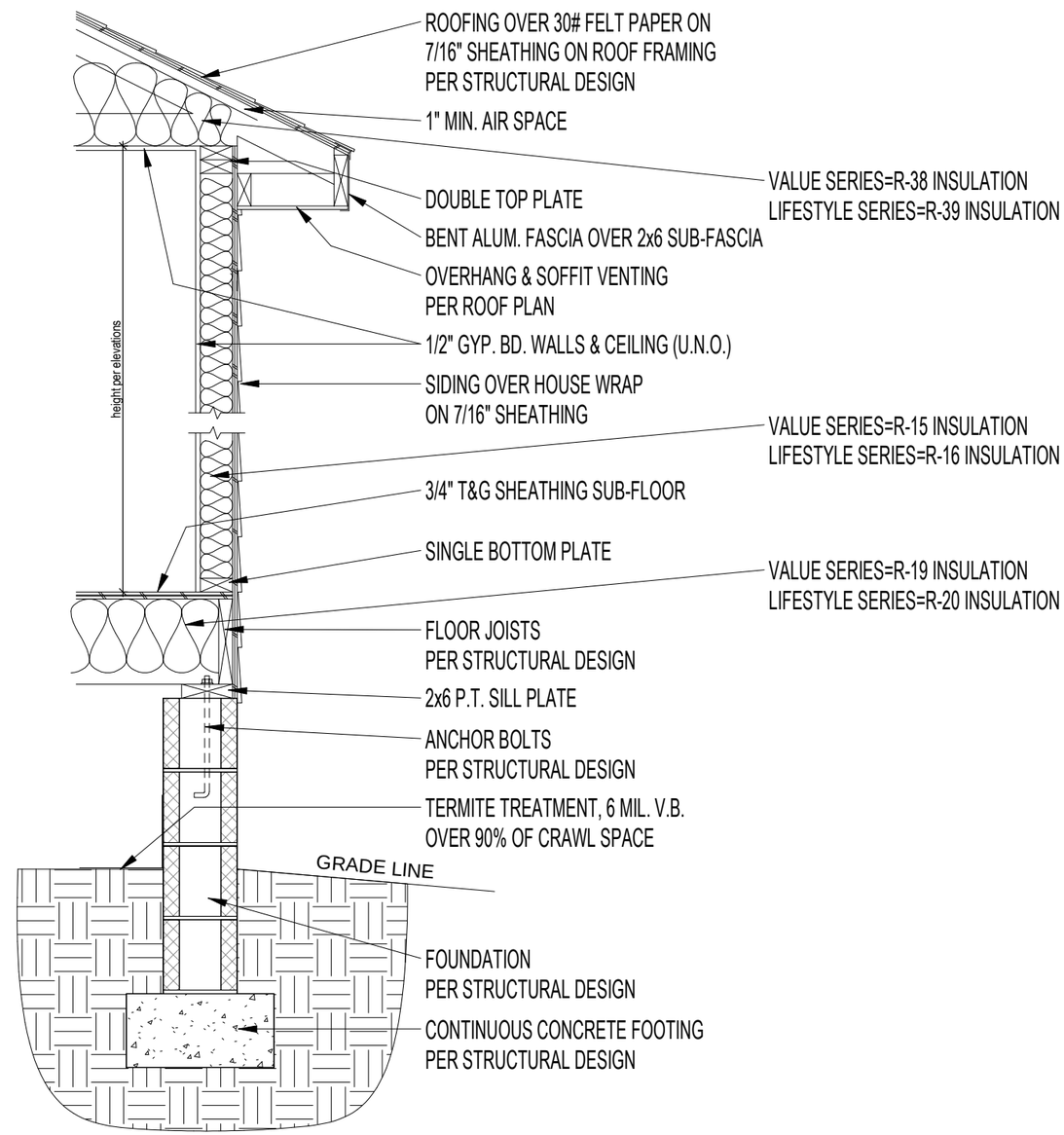

1 Typical Wall Section - Block Fnd 1 floor
3/4" = 1'-0"

ValueBuild HOMES
3015 Jefferson Davis Hwy, Sanford, NC 27332

CYPRESS - Elevation A

Typical Wall Section

Job #: 25-FAY-SAN-019
Address: 1129 Holder Rd
Lillington, NC 27546
County: Harnett County

Plan Version Date:
10-4-24

Job Version Date:
6-6-25

Sheet #:
Sec-Crawl/Blk 1flr

The structural design of this plan is the property of Engineering Tech Associates, P.A. These plans are for the one time use at the location and for the client listed. Engineering Tech Associates, P.A. assumes no liability for these plans if they are reproduced, in whole or in part, for construction at any other location without written permission from Engineering Tech Associates, P.A.

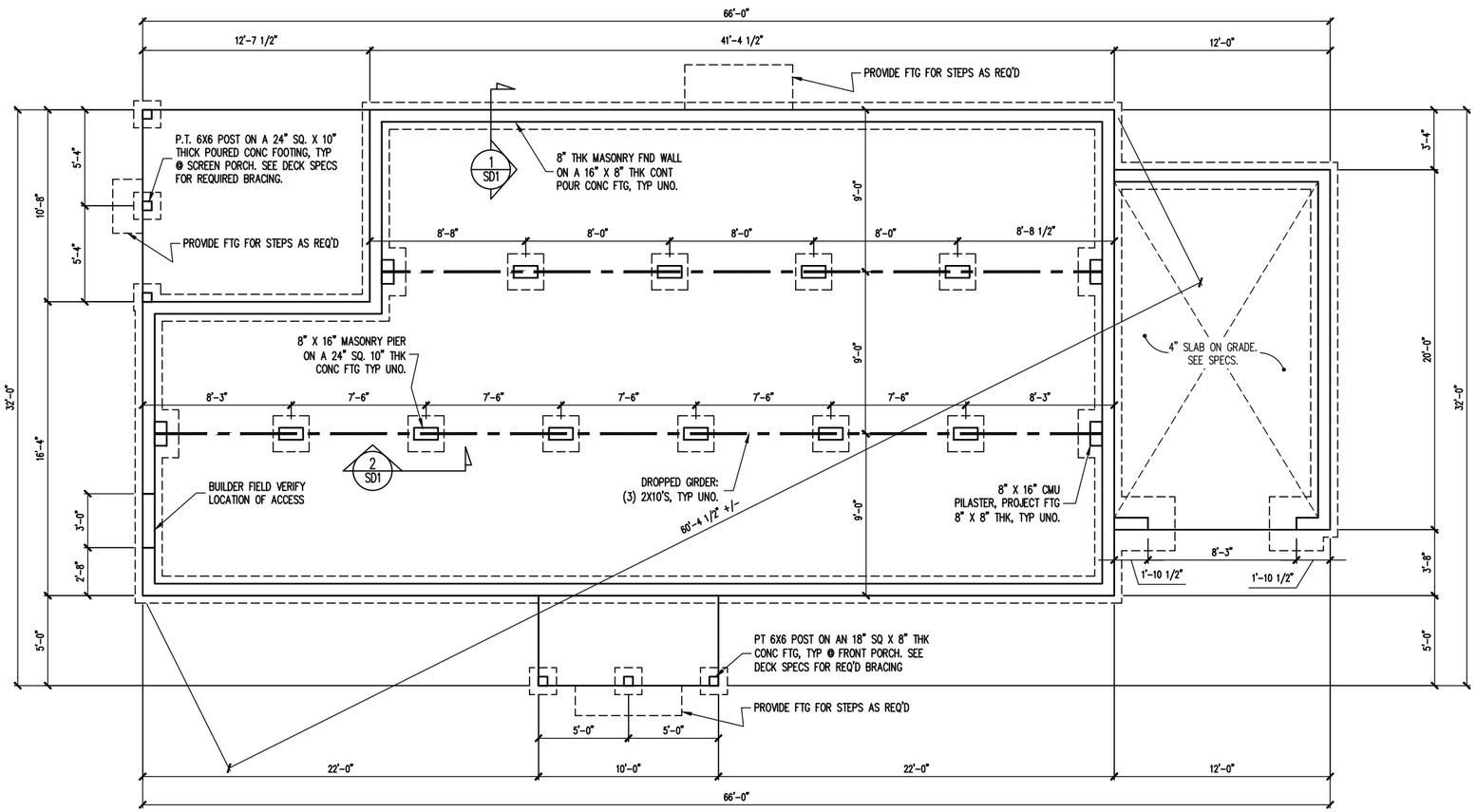

PLAN DESIGNED UNDER 2018 NORTH CAROLINA RESIDENTIAL CODE

NOTES:
-HEIGHT AND BACKFILL LIMITATIONS FOR FOUNDATION WALLS ARE TO BE GOVERNED BY THE NCSBC, LATEST EDITION. REINFORCEMENT AND GROUTING SHALL BE DETERMINED BY FINAL SITE CONDITIONS.

-BUILDER TO FIELD LOCATE CRAWLSPACE ACCESS OPENING WITH MINIMUM DIMENSIONS OF 18X24. DO NOT LOCATE ACCESS OPENING BELOW POINT LOADS FROM ABOVE WITHOUT ENGINEER APPROVAL.

FOUNDATION PLAN

1/8" = 1'-0"

NORTH CAROLINA PROFESSIONAL SEAL 046794 ENGINEER NATHANIEL B. GRAY 07/02/2025

Engineering Tech ASSOCIATES, P.A.
STRUCTURAL ENGINEERS
License No. C-3870
318 W MILLBROOK RD, SUITE 201
Raleigh, North Carolina 27609
Phone (919) 844-1661

VALUE BUILD HOMES
SCOPE: STRUCTURAL ADDENDUM
LOC: 1129 HOLDER RD
LILLINGTON, NC
JOB# 25-FAY-SAN-019 SINGLER

ENG: PAL/NBG
DATE: 07/02/2025

PLAN
CYPRESS

PROJECT NO.
25-26-081

SHEET NO.
S1

The structural design of this plan is the property of Engineering Tech Associates, P.A. These plans are for the one time use at the location and for the client listed. Engineering Tech Associates, P.A. assumes no liability for these plans if they are reproduced, in whole or in part, for construction at any other location without written permission from Engineering Tech Associates, P.A.

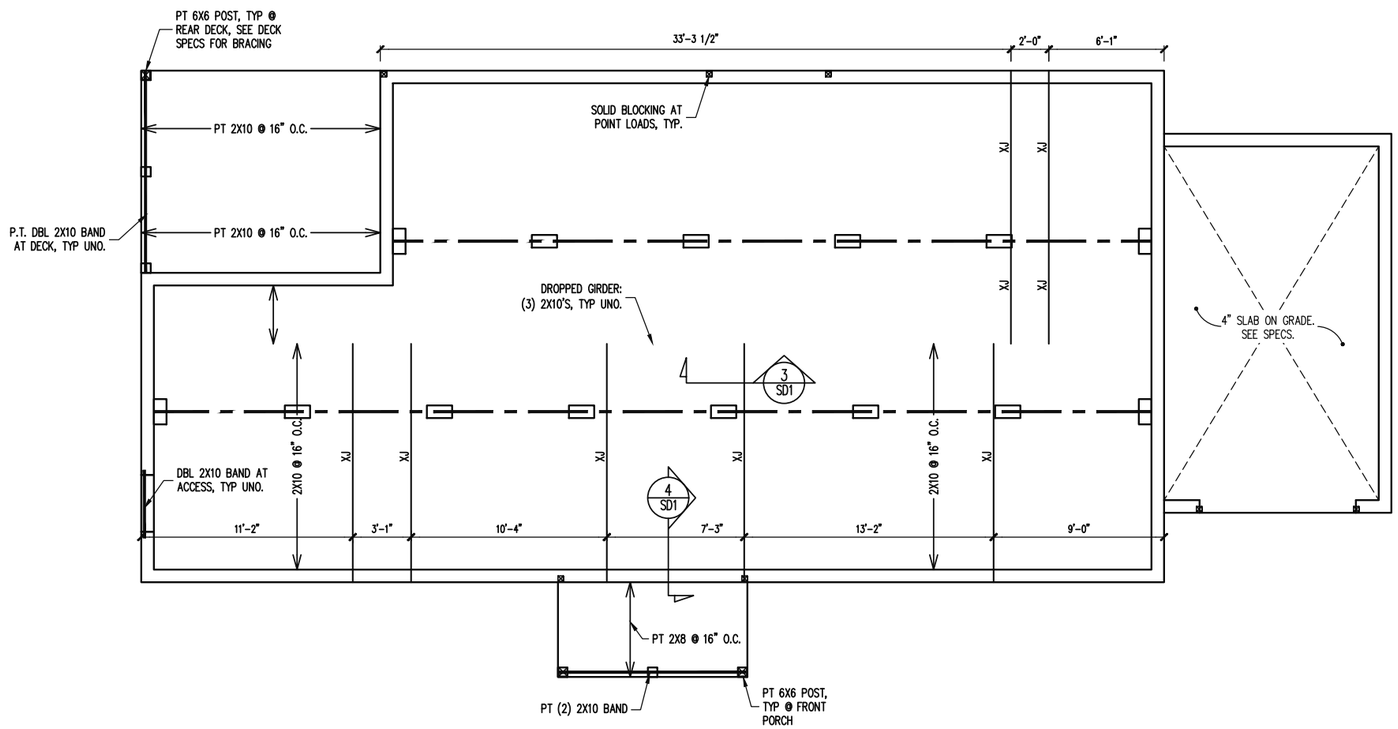

CRAWL SPACE FRAMING PLAN

3/16" = 1'-0"

NORTH CAROLINA PROFESSIONAL ENGINEER SEAL 046794 NATHANIEL B. GRAY

Nathaniel B. Gray 07/02/2025

Engineering Tech ASSOCIATES, P.A.
STRUCTURAL ENGINEERS
License No. C-3870
318 W MILLBROOK RD, SUITE 201
Raleigh, North Carolina 27609
Phone (919) 844-1661

VALUE BUILD HOMES

SCOPE: STRUCTURAL ADDENDUM

LOC: 1129 HOLDER RD
LILLINGTON, NC

JOB# 25-FAY-SAN-019 SINGLER

ENG: PAL/NBG
DATE: 07/02/2025

PLAN
CYPRESS

PROJECT NO.
25-26-081

SHEET NO.
S2

The structural design of this plan is the property of Engineering Tech Associates, P.A. These plans are for the one time use at the location and for the client listed. Engineering Tech Associates, P.A. assumes no liability for these plans if they are reproduced, in whole or in part, for construction at any other location without written permission from Engineering Tech Associates, P.A.

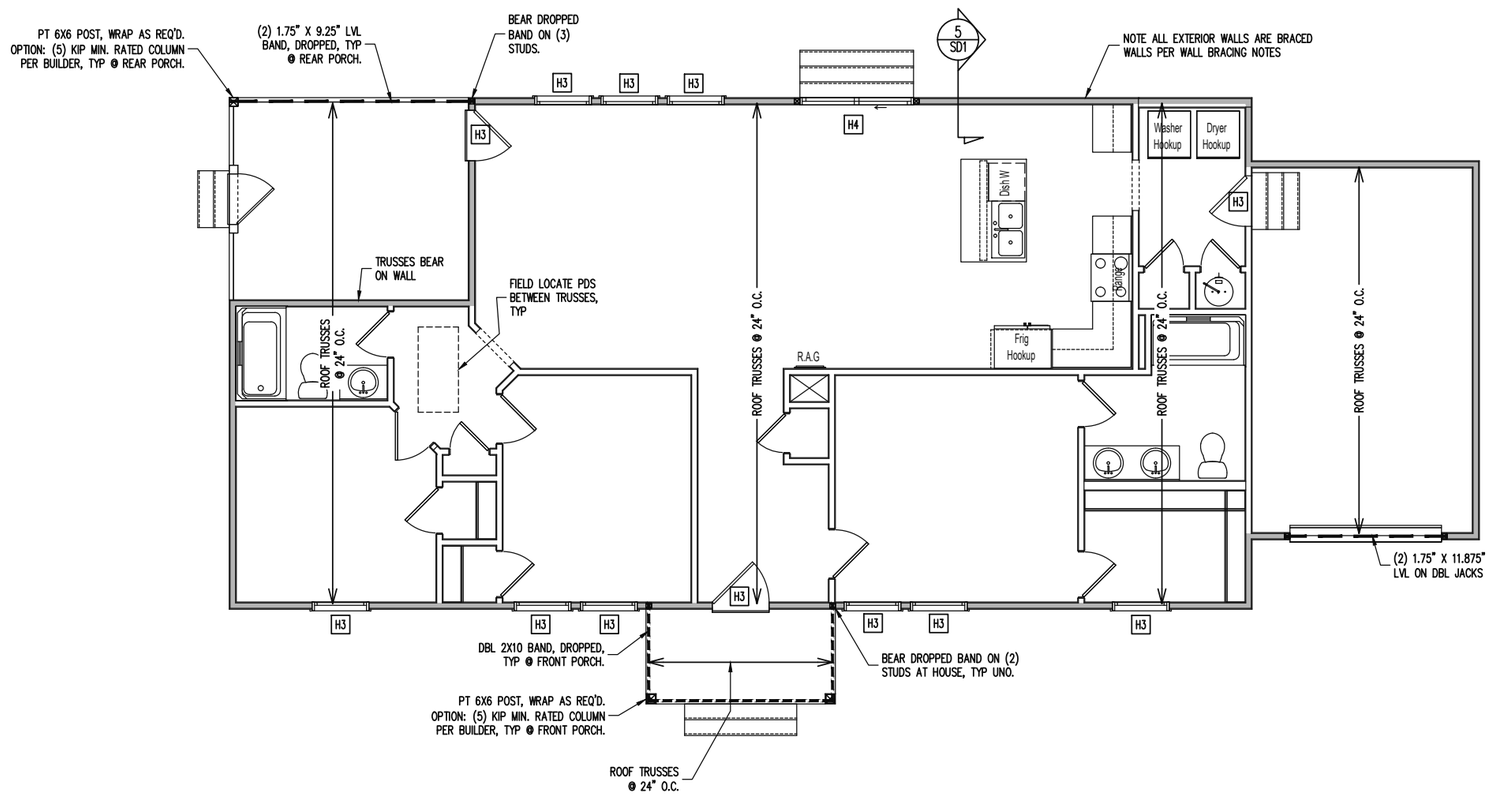

CONSTRUCTION SPECIFICATIONS

INSTANT REFERENCES

REFER TO THE CONSTRUCTION SPECIFICATIONS SECTIONS FOR THE FOLLOWING INFORMATION:

PART 1.01: CURRENT GOVERNING CODE

PART 14: STUD SUPPORT FOR BEAMS

PART 17: KING STUDS FOR EXTERIOR WALLS

SEE DETAIL / CONSTRUCTION SPECIFICATIONS SHEETS FOR I-JOISTS ALLOWABLE SUBSTITUTIONS

WALL BRACING

SHADED WALLS:

ALL EXTERIOR STUD WALLS, EXTERIOR SIDE, ARE TO BE CONTINUOUSLY SHEATHED WITH 7/16 APA RATED OSB NAILED TO STUDS WITH 8d NAILS @ 6" O.C. AT PANEL EDGES, 12" O.C. IN PANEL FIELD.

NOTES:
PROVIDED CONTINUOUS SHEATHING = 185' MIN.

REFERENCE PART 16.02 OF CONSTRUCTION SPECIFICATIONS FOR GENERAL WIND BRACING INFORMATION.

HEADER SCHEDULE

H1 SINGLE 2X4 TURNED FLAT (A)

H2 (2) 2X4'S ON SINGLE JACKS (B)

H3 (2) 2X8'S ON SINGLE JACKS (C)

H4 (2) 1.75" X 9.25" LVL'S ON DBL JACKS

(A) TYPICAL FOR INTERIOR NON LOAD BEARING WALLS ONLY, ROUGH OPENING 38" MAX.

(B) TYPICAL FOR INTERIOR NON LOAD BEARING WALLS ONLY, ROUGH OPNG 38" TO 74" MAX.

(C) TYPICAL FOR ALL CONDITIONS NOT LISTED IN (A) OR (B) UNO.

NOTES:
-HEADERS IN NON LOAD BEARING INTERIOR WALLS ARE NOT LABELED.

1ST FLOOR FRAMING PLAN

WALLS AND CEILING
1/8" = 1'-0"

NORTH CAROLINA PROFESSIONAL ENGINEER SEAL 046794 NATHANIEL B. GRAY 07/02/2025

Engineering Tech ASSOCIATES, P.A.
STRUCTURAL ENGINEERS
License No. C-3870
318 W MILLBROOK RD, SUITE 201
Raleigh, North Carolina 27609
Phone (919) 844-1661

VALUE BUILD HOMES
SCOPE: STRUCTURAL ADDENDUM
LOC: 1129 HOLDER RD
LILLINGTON, NC
JOB# 25-FAY-SAN-019 SINGLER

ENG: PAL/NBG
DATE: 07/02/2025

PLAN
CYPRESS

PROJECT NO.
25-26-081

SHEET NO.
S3

The structural design of this plan is the property of Engineering Tech Associates, P.A. These plans are for the one time use at the location and for the client listed. Engineering Tech Associates, P.A. assumes no liability for these plans if they are reproduced, in whole or in part, for construction at any other location without written permission from Engineering Tech Associates, P.A.

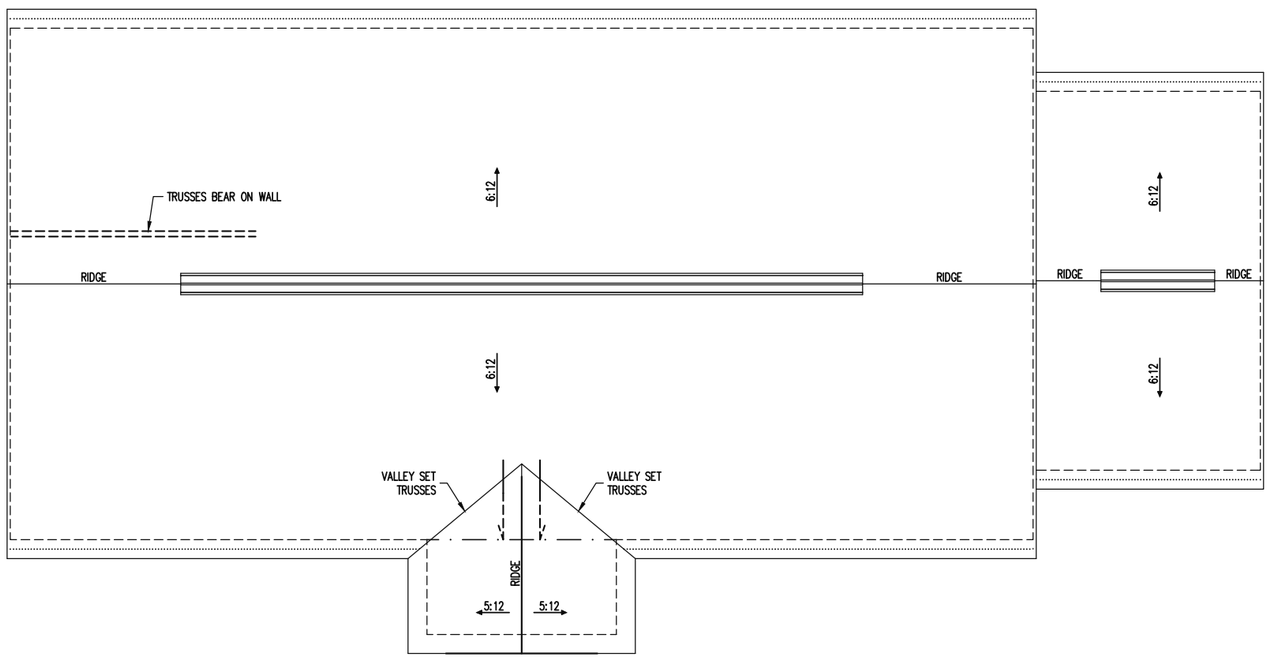

TRUSS UPLIFT CONNECTORS

EXPOSURE B, 120 MPH, ANY PITCH

24" O.C. MAX ROOF TRUSS SPACING

TRUSSES SHALL BE ATTACHED TO SUPPORT WALL FOR UPLIFT RESISTANCE. CONTINUOUS OSB WALL SHEATHING BELOW PROVIDES CONTINUOUS UPLIFT RESISTANCE TO FOUNDATION. ALL TRUSSES SUPPORTED BY INTERMEDIATE SUPPORT WALLS, KNEEWALLS OR BEAMS SHALL BE ATTACHED TO SUPPORTING MEMBER PER SCHEDULE BELOW.

ROOF SPAN IS MEASURED HORIZONTALLY BETWEEN FURTHEST SUPPORT POINTS.

ROOF SPAN	CONNECTOR
UP TO 18'	NAILING PER TABLE 602.3(1) NCRBC 2018 EDITION
OVER 18'	(1) SIMPSON H2.5A HURRICANE CLIP TO DBL TOP PLATE OR BEAM

FRAMING NOTES

ROOF ONLY

-ROOF TRUSSES PER MANUFACTURER, TYP U.N.O.

-VERIFY ROOF PITCHES, OVERHANG LENGTHS, AND KNEEWALL FRAMING HGTS WITH ARCHITECTURAL DRAWINGS, TYPICAL.

ROOF FRAMING PLAN

1/8" = 1'-0"

NORTH CAROLINA PROFESSIONAL SEAL 046794 ENGINEER NATHANIEL B. GRAY 07/02/2025

Engineering Tech ASSOCIATES, P.A.
STRUCTURAL ENGINEERS
License No. C-3870
318 W MILLBROOK RD, SUITE 201
Raleigh, North Carolina 27609
Phone (919) 844-1661

VALUE BUILD HOMES

SCOPE: STRUCTURAL ADDENDUM

LOC: 1129 HOLDER RD
LILLINGTON, NC

JOB# 25-FAY-SAN-019 SINGLER

ENG: PAL/NBG
DATE: 07/02/2025

PLAN
CYPRESS

PROJECT NO.
25-26-081

SHEET NO.
S4

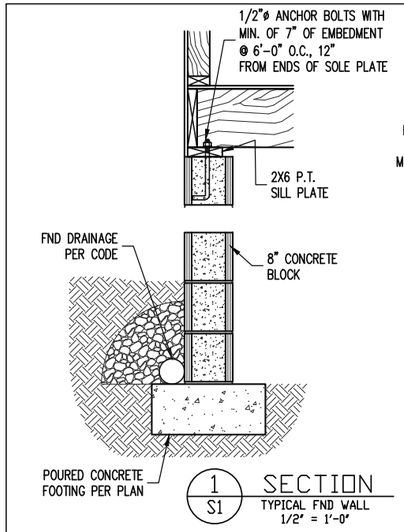

1 / S1 SECTION
TYPICAL FND WALL
1/2" = 1'-0"

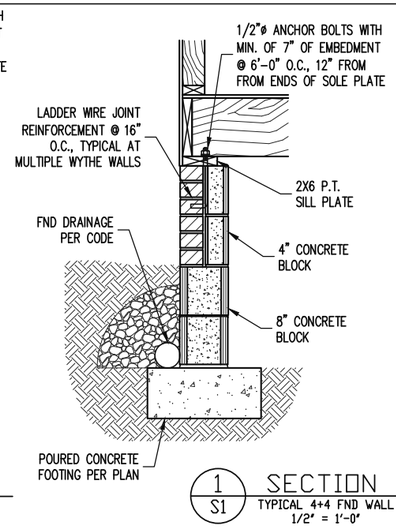

1 / S1 SECTION
TYPICAL 4+4 FND WALL
1/2" = 1'-0"

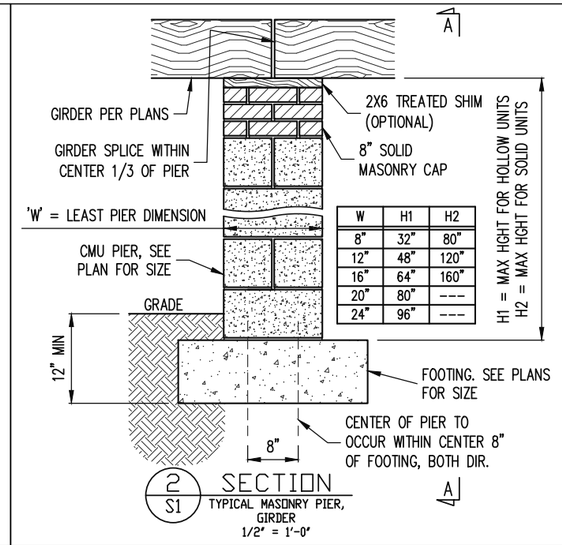

W	H1	H2
8"	32"	80"
12"	48"	120"
16"	64"	160"
20"	80"	---
24"	96"	---

2 / S1 SECTION
TYPICAL MASONRY PIER, GIRDER
1/2" = 1'-0"

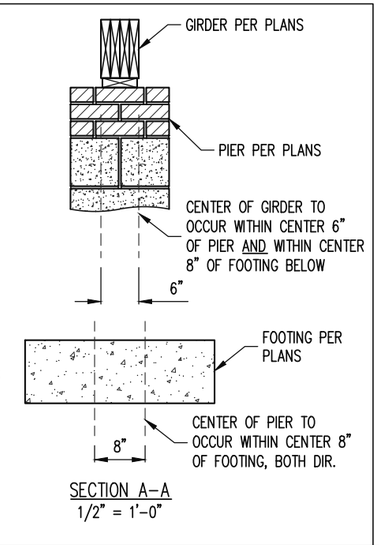

SECTION A–A
1/2" = 1'-0"

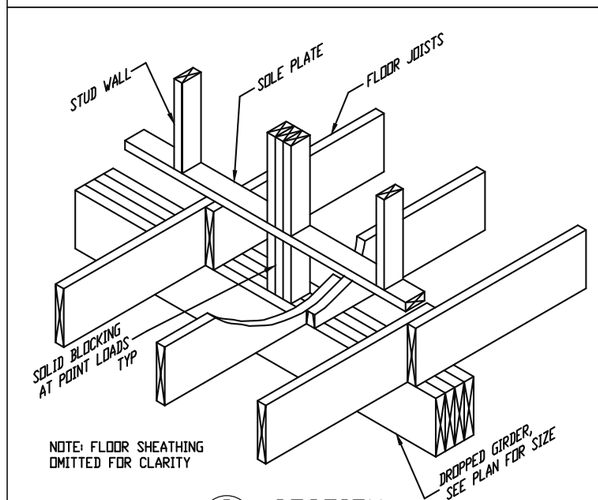

3 / S2 SECTION
TYPICAL DROPPED GIRDER
1/2" = 1'-0"

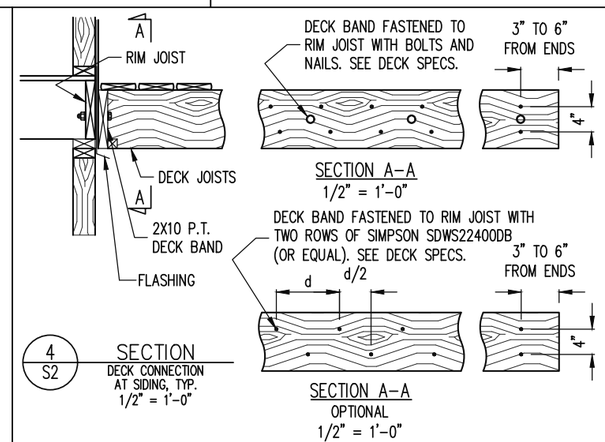

4 / S2 SECTION
DECK CONNECTION AT SIDING, TYP.
1/2" = 1'-0"

SECTION A–A
1/2" = 1'-0"

SECTION A–A
OPTIONAL
1/2" = 1'-0"

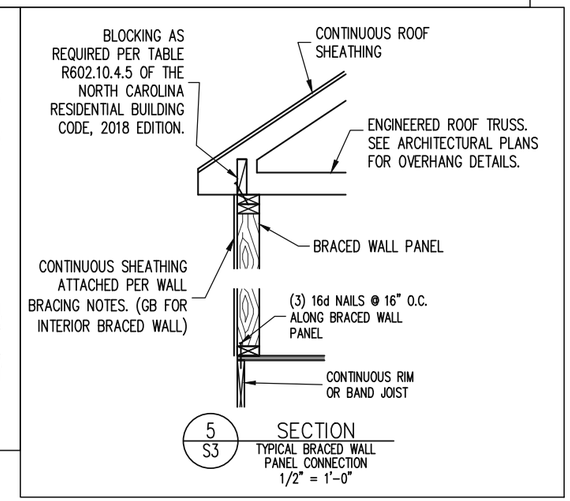

5 / S3 SECTION
TYPICAL BRACED WALL PANEL CONNECTION
1/2" = 1'-0"

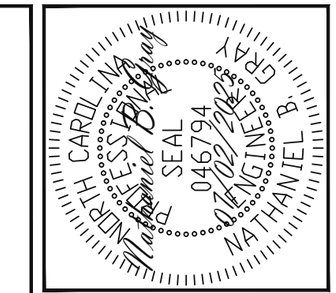

Engineering Lech ASSOCIATES, P.A.
STRUCTURAL ENGINEERS
License No. C-3870
318 W MILLBROOK RD, SUITE 201
Raleigh, North Carolina 27609
Phone (919) 844-1661

VALUE BUILD HOMES
SCOPE: STRUCTURAL ADDENDUM
LOC: 1129 HOLDER RD
LILLINGTON, NC
JOB# 25-FAY-SAN-019 SINGLER

ENG: PAL/NBG
DATE: 07/02/2025

PLAN
CYPRESS

PROJECT NO.
25-26-081

SHEET NO.
SD1
5 of 6

CONSTRUCTION SPECIFICATIONS

PART 1: GENERAL

1.01 CONSTRUCTION SHALL MEET THE REQUIREMENTS OF THE NORTH CAROLINA RESIDENTIAL CODE, 2018 EDITION.

1.02 DIMENSIONS SHOWN SHALL GOVERN OVER SCALE ON THESE DRAWINGS.

1.05 METHODS, PROCEDURES AND SEQUENCES OF CONSTRUCTION ARE THE RESPONSIBILITY OF THE CONTRACTOR, WHO SHALL TAKE ALL NECESSARY PRECAUTIONS TO MAINTAIN AND INSURE THE INTEGRITY OF THE STRUCTURE AT ALL STAGES OF CONSTRUCTION.

PART 2: DESIGN LOADS

2.01 DESIGN LOADS SHALL CONFORM WITH THE TABLE BELOW:

USE	LIVE LOAD (PSF)	DEAD LOAD (PSF)
BALCONIES, DECKS, ATTICS WITH FIXED STAIR ACCESS, DWELLING UNITS INCLUDING ATTICS WITH FIXED STAIR ACCESS, STAIRS, FIRE ESCAPES	40	10
GARAGES (PASSENGER CARS ONLY)	50	--
ATTICS (NO STORAGE, LESS THAN 5' HEADROOM)	10	10
ATTICS (WITH STORAGE)	20	10
ROOF	20	10 (15 FOR VAULTS)

NOTES: – INDIVIDUAL STAIR TREADS ARE TO BE DESIGNED FOR THE UNIFORMLY DISTRIBUTED LIVE LOAD OF 40 PSF OR A 300 LB. CONCENTRATED LOAD ACTING OVER AN AREA OF 4 SQ. WHICHEVER PRODUCES THE GREATER STRESS.
– BUILDER TO VERIFY DEAD LOAD DOES NOT EXCEED 10 PSF WHEN HEAVY FLOOR OR ROOF FINISHES SUCH AS TILE OR SLATE ARE UTILIZED. NOTIFY ENGINEERING UNDER THESE CONDITIONS

2.02 INTERIOR WALLS: 5 PSF LATERAL.

2.03 BASIC WIND DESIGN VELOCITY OF 120 MPH.

2.04 SOIL BEARING CAPACITY 2000 PSF (PRESUMPTIVE).

PART 3: STRUCTURAL STEEL

3.01 WIDE FLANGE BEAMS AND TEE SECTIONS SHALL CONFORM TO ASTM A992 MINIMUM GRADE

3.02 SQUARE AND RECTANGULAR TUBING SHALL CONFORM TO ASTM A500 GRADE B MINIMUM GRADE.

3.03 STEEL PIPE SHALL CONFORM TO ASTM A53 GRADE B, TYPE S, MINIMUM GRADE

3.04 ALL OTHER STRUCTURAL STEEL SHALL CONFORM TO ASTM A36 MINIMUM GRADE

3.05 STRUCTURAL STEEL CONSTRUCTION SHALL MEET THE REQUIREMENTS OF THE AISC SPECIFICATION FOR THE DESIGN, FABRICATION AND ERECTION OF STRUCTURAL STEEL FOR BUILDINGS.

PART 4: WELDING

4.01 WELDING ELECTRODES SHALL BE E70XX AND ALL WELDING SHALL BE PERFORMED BY AN AWS CERTIFIED WELDER

PART 5: CONCRETE AND SLABS ON GRADE

5.01 CAST IN PLACE CONCRETE SHALL BE OF NORMAL WEIGHT, 6% AIR ENTRAINMENT, AND SHALL HAVE A MINIMUM COMPRESSIVE STRENGTH OF 3000 PSI AT 28 DAYS TYP UNO. ALL CONCRETE, INCLUDING CONCRETE FOR FOOTINGS, IS TO BE CAST IN PLACE, TYP UNO.

5.02 REINFORCED CAST IN PLACE CONCRETE SHALL BE PROPORTIONED, MIXED AND PLACED IN ACCORDANCE WITH THE SPECIFICATIONS OF ACI 318, LATEST EDITION.

5.03 SLABS ON GRADE, IF ANY, SHALL CONTAIN SYNTHETIC POLYPROPYLENE FIBRILLATED MICRO FIBERS, FIBER LENGTH 1 1/2", DOSAGE RATE 1 1/2 LBS/CU YD. SLAB TO BE PLACED ON A 6 MIL VAPOR BARRIER ON 4" MIN GRANULAR FILL ON SOIL WITH 90% MIN STANDARD PROCTOR DENSITY. VAPOR BARRIER MAY BE OMITTED FOR SLABS NOT IN ENCLOSED AREAS

PART 6: REBAR AND WIRE REINFORCEMENT

6.01 REBAR SHALL BE DEFORMED STEEL CONFORMING TO ASTM A615 GRADE 60 TYP UNO

6.02 LAP SPLICES SHALL BE CLASS B AS DEFINED BY ACI 318, TYP UNO

6.03 WIRE REINFORCEMENT SHALL BE 9 GA AND SHALL CONFORM TO ASTM A1064.

PART 7: MASONRY

7.01 CONCRETE MASONRY UNITS SHALL CONFORM TO ASTM C90 AND C55, NORMAL WEIGHT, f'M = 1,500 PSI MIN

7.02 CLAY MASONRY UNITS SHALL CONFORM TO ASTM C62-17 GRADE SW

7.03 MORTAR SHALL BE TYPE S. MORTAR AND GROUT SHALL CONFORM TO ASTM C476, MIN COMPRESSIVE STRENGTH OF 2000 PSI.

7.04 MASONRY CONSTRUCTION SHALL CONFORM TO THE SPECIFICATIONS OF ACI 530

7.05 LADDER WIRE REINFORCEMENT SHALL CONFORM TO ASTM A951. 6" MIN LAPS FOR CONTINUOUS WALL APPLICATIONS

PART 8: BOLTS AND LAG SCREWS

8.01 BOLTS SHALL CONFORM TO ASTM A307 MINIMUM GRADE TYP UNO. INSTALL STANDARD STEEL WASHERS (ASTM F844-07a) FOR THE NUT / BOLT HEAD WHEN BOLTING WOOD MEMBERS

8.02 LAG SCREWS SHALL CONFORM TO ANSI/ASME STANDARD B18.2.1-1981. PILOT HOLES SHALL BE USED FOR LAG SCREW INSTALLATION AND SHALL BE BORED ACCORDING TO NDS SPECIFICATIONS. INSTALL STANDARD STEEL WASHERS (ASTM F844-07a) FOR SCREW HEAD

8.03 ANCHOR RODS AND BOLTS SHALL CONFORM TO ASTM F1554-15 GRADE 36 UNO. BENT ANCHOR BOLTS SHALL HAVE A 2" MIN HOOK UNO

PART 9: DRIVEN FASTENERS

9.01 NAILS, SPIKES AND STAPLES SHALL CONFORM TO ASTM F 1667- 05. NAILS ARE TO BE COMMON WIRE OR BOX

PART 10: DIMENSIONAL LUMBER

10.01 SOLID SAWN WOOD FRAMING DESIGN IS BASED ON NO. 2 SPRUCE PINE FIR OR SYP #2 FOR JOISTS, RAFTERS, GIRDERS, BEAMS, STUDS, ETC.

PART 11: ENGINEERED LUMBER

11.01 LVL OR PSL MINIMUM ALLOWABLE DESIGN STRESSES ARE AS FOLLOWS:
E= 1.9 X 10E6 PSI, Fb = 2600 PSI, Fv = 285 PSI, Fc = 750 PSI
LSL MINIMUM ALLOWABLE DESIGN STRESSES ARE AS FOLLOWS:
E= 1.3 X 10E6 PSI, Fb = 1700 PSI, Fv = 400 PSI, Fc = 680 PSI

11.02 LVL OR PSL MEMBERS MAY BE RIPPED FROM DEEPER MEMBERS TO MATCH THE MEMBER DEPTH SPECIFIED IN THE PLANS

PART 12: PRESSURE TREATED LUMBER

12.01 LUMBER IN CONTACT WITH THE GROUND, CONCRETE OR MASONRY SHALL BE PRESSURE TREATED IN ACCORDANCE WITH AWPA STANDARD C-15. ALL OTHER EXPOSED LUMBER SHALL BE TREATED IN ACCORDANCE WITH AWPA STANDARD C-2 OR BY ANY METHOD GIVING EQUAL PROTECTION. THE BUILDING CODE OFFICE MAY ALSO APPROVE A NATURAL DECAY RESISTANT WOOD PER SECTION 19-6(A)

PART 13: STEEL FLITCH PLATE BEAMS

13.01 FLITCH PLATE BEAMS SHALL CONSIST OF A CONTINUOUS STEEL PLATE BOLTED BETWEEN TWO PIECES OF CONTINUOUS LUMBER AS SIZED ON THE PLANS. BOLT PIECES TOGETHER USING 1/2" ø BOLTS SPACED AT 24" O.C. STAGGERED TOP TO BOTTOM OF THE BEAM. MAINTAIN A 2" EDGE DISTANCE. PLACE TWO BOLTS, ONE ABOVE THE OTHER, 6" ± 2" FROM EACH END OF THE BEAM.

PART 14: STUD SUPPORTS FOR BEAMS

14.01 STEEL, ENGINEERED LUMBER, AND FLITCH PLATE BEAMS BEARING ON A STUD WALL SHALL BEAR AS FOLLOWS:

1-WHEN THE BEAM IS PERPENDICULAR TO, OR SKEWED RELATIVE TO THE WALL, THE BEAM SHALL BEAR FULL WIDTH ON THE SUPPORTING WALL INDICATED AND SHALL BE SUPPORTED BY A MINIMUM OF THREE GANGED STUDS, OR A GANGED STUD COLUMN WITH A NUMBER OF STUDS SUCH THAT THE STUD COLUMN IS AT LEAST AS WIDE AS THE TRUE WIDTH OF THE BEAM BEING SUPPORTED, WHICHEVER IS GREATER, TYP UNO. FOR THE SKEWED CONDITION PARTICULAR CARE SHALL BE TAKEN TO ENSURE STUD COLUMN IS CENTERED ON THE BEAM
2-BEAMS BEARING ONTO THE END OF A STUD WALL PARALLEL TO THE BEAM SHALL BEAR A MINIMUM OF 4 1/2" ONTO THE WALL AND BE SUPPORTED BY A TRPL STUD GANGED COLUMN TYP UNO.

14.02 DIMENSIONAL LUMBER BEAMS BEARING ON A STUD WALL SHALL BEAR AS FOLLOWS:

1-WHEN THE BEAM IS PERPENDICULAR TO, OR SKEWED RELATIVE TO THE WALL, THE BEAM SHALL BEAR FULL WIDTH ON THE SUPPORTING WALL INDICATED (LESS 1 1/2" TO ALLOW FOR A CONTINUOUS RIM JOIST WHERE APPLICABLE) AND SHALL BE SUPPORTED BY A GANGED STUD COLUMN THE SAME WIDTH AS THE BEAM TYP UNO. (E.G. A TRIPLE 2X10 IS TO BE SUPPORTED BY (3) STUDS). FOR THE SKEWED CONDITION PARTICULAR CARE SHALL BE TAKEN TO ENSURE STUD COLUMN IS CENTERED ON THE BEAM
2-BEAMS BEARING ONTO THE END OF A STUD WALL PARALLEL TO THE BEAM SHALL BEAR A MINIMUM OF 3" ONTO THE WALL AND BE SUPPORTED BY A DBL STUD GANGED COLUMN TYP UNO.

14.03 EXTRA JOISTS BEARING ON A STUD WALL PERPENDICULAR TO OR SKEWED RELATIVE TO THE BEAM SHALL BE SUPPORTED BY ONE ADDITIONAL STUD.

14.04 STUDS THAT ARE GANGED TO FORM A COLUMN SHALL HAVE ADJACENT STUDS WITHIN THE COLUMN NAILED TOGETHER WITH ONE ROW OF 10d NAILS AT 8" O.C. (TWO ROWS OF 10d NAILS @ 8" O.C., 3" APART, FOR 2X8 OR 2X10 STUDS) ALL COLUMNS SHALL BE CONTINUOUS DOWN TO THE FOUNDATION OR OTHER PROPERLY DESIGNED STRUCTURAL ELEMENT SUCH AS A BEAM. COLUMNS TRANSFERRING LOADS THROUGH FLOOR LEVELS SHALL BE SOLIDLY BLOCKED FOR THE FULL WIDTH OF THE STUD COLUMN WITHIN THE CAVITY FORMED BY THE FLOOR JOISTS.

PART 15: NAILING OF MULTI PLY WOOD BEAMS

15.01 SOLID SAWN LUMBER JOISTS THAT ARE GANGED TO FORM A BEAM SHALL HAVE ADJACENT MEMBERS IN THE BEAM NAILED TOGETHER WITH THREE ROWS OF 10d NAILS @ 16" O.C. FOR 2X10 OR LARGER, TWO ROWS OF 10d NAILS @ 16" O.C. FOR 2X8, ONE ROW OF 10d NAILS @ 16" O.C. FOR 2X6 OR SMALLER. STAGGER ROWS 5" MIN.

15.02 LVL MEMBERS THAT ARE GANGED TO FORM A BEAM SHALL HAVE ADJACENT MEMBERS IN THE BEAM FASTENED TOGETHER PER MANUFACTURERS RECOMMENDATIONS, TYP UNO

PART 16: WALL FRAMING AND BRACING

16.01 STUD WALLS SHALL CONSIST OF 2X4 STUDS SPACED AT 16" O.C. UNO. STUDS SHALL BE CONTINUOUS FROM SOLE PLATE AT FLOOR TO DOUBLE TOP PLATE AT THE CEILING OR ROOF. NO INTERMEDIATE BANDS OR PLATES SHALL CAUSE DISCONTINUITIES IN A STUD WALL EXCEPT AS REQUIRED FOR DOOR OR WINDOW OPENINGS. THE KING STUDS FOR SUCH OPENINGS SHALL BE CONTINUOUS, TYP UNO.
MAX ALLOWABLE WALL HEIGHTS FOR EXTERIOR STUD WALLS, WITH SOLE PLATE AND DBL TOP PLATE AND 7/16" OSB EXTERIOR BRACING AND ROW OF 2X4 / 2X6 PURLINS AT 8' HEIGHT (AND AT 16' HEIGHT FOR TALL WALLS), TYP UNO:
2X4 @ 16" O.C.: 11'-1 1/2" 2X6 @ 16" O.C.: 17'-0"
2X4 @ 12" O.C.: 12'-1 1/2" 2X6 @ 12" O.C.: 18'-8"
DBL 2X4 @ 16" O.C.: 13'-4" DBL 2X6 @ 16" O.C.: 21'-0"

16.02 FOR WALL BRACING THE FOLLOWING SHALL APPLY:
-BLOCKING AT UNSUPPORTED PANEL EDGES IS REQUIRED TYP UNO.
-WALL BRACING IS BY ENGINEERED DESIGN AND NOT PRESCRIPTIVE PER SECTION 602.10 OF THE 2018 NCRC. CONTINUOUS SHEATHING HAS BEEN PROVIDED, ALONG WITH ALTERNATIVE METHODS TO INSURE THE MINIMUM INTENT OF SECTION 602.10 OF THE 2018 NCRC HAS BEEN MET AND EXCEEDED.
-BRACED WALL PANELS SHALL BE FASTENED IN ACCORDANCE WITH TABLE 602.3(1) TO PROVIDE CONTINUOUS PANEL UPLIFT RESISTANCE AND COMPLIANCE WITH NCRBC R602.3.5 AND R802.11 UNLESS NOTED OTHERWISE ON STRUCTURAL PLANS.
-MAY SUBSTITUTE WSP FOR GB
-SINGLE JOIST, CONTINUOUS RIM JOIST, OR BLOCKING OF EQUAL DEPTH IS REQUIRED ABOVE AND BELOW ALL BRACED WALLS. NAIL BLOCKING ABOVE WALL TO TOP PLATE WITH 16d TOE NAILS @ 6" O.C. NAIL SOLE PLATE OF BRACED WALL TO BLOCKING BELOW WITH (3) 16d NAILS @ 16" O.C. BLOCKING AT HORIZONTAL JOINTS IN BRACED WALL LINES ONLY REQUIRED AT SHADED WALLS, UNO.

PART 17: KING STUDS

17.01 KING STUDS FOR OPENINGS IN EXTERIOR WALLS SHALL BE AS FOLLOWS:

		NUMBER OF KING STUDS				
MAX OPENING WIDTH		5'-0"	9'-0"	13'-0"	17'-0"	21'-0"
STUD SIZE	2X4	1	2	3	4	5
	2X6	1	1	2	2	2
	2X8	1	1	1	1	2

PART 18: SUBSTITUTIONS

18.01 MATERIAL OR MEMBER SIZE SUBSTITUTIONS OR PLAN DEVIATIONS REQUIRE THE WRITTEN AUTHORIZATION OF THE DESIGNERS. UNAUTHORIZED DEVIATIONS ARE THE SOLE RESPONSIBILITY OF THE CONTRACTOR.

PART 19: OWNERSHIP OF STRUCTURAL DESIGN

19.01 THE STRUCTURAL DESIGN OF THIS PLAN IS THE PROPERTY OF ENGINEERING TECH ASSOCIATES (ETA). THESE PLANS ARE FOR THE ONE TIME USE AT THE LOCATION INDICATED AND FOR THE CLIENT LISTED. ETA ASSUMES NO LIABILITY FOR THESE PLANS IF THEY ARE REPRODUCED, IN WHOLE OR IN PART, FOR CONSTRUCTION AT ANY OTHER LOCATION WITHOUT WRITTEN PERMISSION FROM ETA

ABBREVIATIONS

FND	FOUNDATION	ABV	ABOVE	TJ	TRIPLE JOIST
FTG	FOOTING	B.	BOTH	TYP	TYPICAL
HDG	HOT DIPPED	B.E.	BOTH ENDS	TRPL	TRIPLE
	GALVANIZED	BTWN	BETWEEN	TSP	TRIPLE STUD POCKET
HGR	HANGER	CIP	CAST IN PLACE	UNO	UNLESS NOTED OTHERWISE
LVL	LAMINATED VENEER LUMBER	CONC	CONCRETE	XJ	EXTRA JOIST
NTS	NOT TO SCALE	CS	CONTINUOUS SHEATHING		
O.C.	ON CENTER	DIA	DIAMETER		
PSL	PARALLEL STRAND LUMBER	DBL	DOUBLE		
		DJ	DOUBLE JOIST		
PT	PRESSURE TREATED	DSP	DBL STUD POCKET		
QJ	QUAD JOIST	EQ	EQUAL		
SP	STUD POCKET	EA	EACH		
SQ	SQUARE	FLG	FLANGE		
		FL PL	FLITCH PLATE		
		FLR	FLOOR		

NOTES

THE BUILDER IS RESPONSIBLE FOR REVIEWING PLANS PRIOR TO CONSTRUCTION. THE BUILDER SHALL IMMEDIATELY CONTACT THE ENGINEER OF RECORD (EOR) BEFORE PROCEEDING IF THE FOLLOWING CONDITIONS ARE NOTED BEFORE OR DURING CONSTRUCTION:
1) THE WORKING PLANS DO NOT BEAR THE SEAL OF THE EOR
2) THE PLANS CONTAIN DISCREPANT OR INCOMPLETE INFORMATION

ANY ERRORS DUE TO A FAILURE TO FOLLOW THE ABOVE PROCEDURES SHALL NOT BE THE RESPONSIBILITY OF THE EOR. FURTHERMORE, IT IS THE RESPONSIBILITY OF THE BUILDER TO ENSURE THAN ANY REVISIONS ISSUED BY THE EOR ARE PROMPLY DISTRIBUTED TO THE SUBCONTRACTORS

THE EOR DOES NOT PERFORM FENESTRATION OR VENTING CALCULATIONS OR ANY OTHER CALCULATIONS THAT ARE NOT DIRECTLY RELATED TO STRUCTURAL ENGINEERING.

ROOF AND FLOOR TRUSSES TO BE DESIGNED BY AN ENGINEER REGISTERED BY THE STATE. FINAL TRUSS DRAWING SHOULD BE SUBMITTED TO THE EOR FOR REVIEW

NORTH CAROLINA PROFESSIONAL ENGINEER SEAL 046794 NATHANIEL B. GRAY 07/02/2025

Engineering Tech ASSOCIATES, P.A.
STRUCTURAL ENGINEERS
License No. C-3870
318 W MILLBROOK RD, SUITE 201
Raleigh, North Carolina 27609
Phone (919) 844-1661

VALUE BUILD HOMES
SCOPE: STRUCTURAL ADDENDUM
LOC: 1129 HOLDER RD
LILLINGTON, NC
JOB# 25-FAY-SAN-019 SINGLER

ENG: PAL/NBG
DATE: 07/02/2025

PLAN
CYPRESS

PROJECT NO.
25-26-081

SHEET NO.
SPECS1
6 of 6