ENGINEERING BY TRENCO
A MiTek Affiliate

Trenco
818 Soundside Rd
Edenton, NC 27932

RE: 2411-0099-I - Elmhurst Rev 3-Elev 5-Roof

Site Information:

Project Customer: DRB Raleigh Project Name: DRB Raleigh Model Track
Lot/Block: Subdivision:
Model: Elmhurst Rev 3
Address:
City: State: NC

General Truss Engineering Criteria & Design Loads (Individual Truss Design Drawings Show Special Loading Conditions):

Design Code: IRC2021/TPI2014
Wind Code: ASCE 7-16
Wind Speed: 120 mph
Roof Load: 40.0 psf
Mean Roof Height (feet): 25

Design Program: MiTek 20/20 25.2
Design Method: MWFRS (Envelope)/C-C hybrid Wind ASCE 7-16
Floor Load: N/A psf
Exposure Category: B

No.	Seal#	Truss Name	Date	No.	Seal#	Truss Name	Date
1	I73750757	P2	5/28/25	35	I73750791	A2AT	5/28/25
2	I73750758	P1G	5/28/25	36	I73750792	B1GE	5/28/25
3	I73750759	P1	5/28/25	37	I73750793	B2	5/28/25
4	I73750760	B1G	5/28/25	38	I73750794	B2A	5/28/25
5	I73750761	B1	5/28/25	39	I73750795	V7	5/28/25
6	I73750762	C1G	5/28/25				
7	I73750763	C1	5/28/25				
8	I73750764	VC1	5/28/25				
9	I73750765	A1GE	5/28/25				
10	I73750766	A3	5/28/25				
11	I73750767	H2G	5/28/25				
12	I73750768	H4	5/28/25				
13	I73750769	A2	5/28/25				
14	I73750770	A1G	5/28/25				
	I73750771	A1GR	5/28/25				
16	I73750772	H3G	5/28/25				
17	I73750773	A1B	5/28/25				
18	I73750774	A1	5/28/25				
19	I73750775	A1A	5/28/25				
20	I73750776	H1	5/28/25				
21	I73750777	H2	5/28/25				
22	I73750778	H1G	5/28/25				
23	I73750779	V1	5/28/25				
	I73750780	V2	5/28/25				
25	I73750781	V3	5/28/25				
26	I73750782	V4	5/28/25				
27	I73750783	V5	5/28/25				
28	I73750784	V6	5/28/25				
29	I73750785	A2T	5/28/25				
30	I73750786	H3	5/28/25				
31	I73750787	A1C	5/28/25				
32	I73750788	H3AG	5/28/25				
	I73750789	A2A	5/28/25				
34	I73750790	H3A	5/28/25				

The truss drawing(s) referenced above have been prepared by Truss Engineering Co. under my direct supervision based on the parameters provided by Structural, LLC.

Truss Design Engineer's Name: Gilbert, Eric
My license renewal date for the state of North Carolina is December 31, 2025.

IMPORTANT NOTE: The seal on these truss component designs is a certification that the engineer named is licensed in the jurisdiction(s) identified and that the designs comply with ANSI/TPI 1. These designs are based upon parameters shown (e.g., loads, supports, dimensions, shapes and design codes), which were given to MiTek or TRENCO. Any project specific information included is for MiTek's or TRENCO's customers file reference purpose only, and was not taken into account in the preparation of these designs. MiTek or TRENCO has not independently verified the applicability of the design parameters or the designs for any particular building. Before use, the building designer should verify applicability of design parameters and properly incorporate these designs into the overall building design per ANSI/TPI 1, Chapter 2.

NORTH CAROLINA PROFESSIONAL SEAL 036322 ENGINEER ERIC A. GILBERT

May 28,2025

Gilbert, Eric

Job	Truss	Truss Type	Qty	Ply	Elmhurst Rev 3-Elev 5-Roof
	P2	Monopitch Supported Gable	1	1	I73750757 Job Reference (optional)

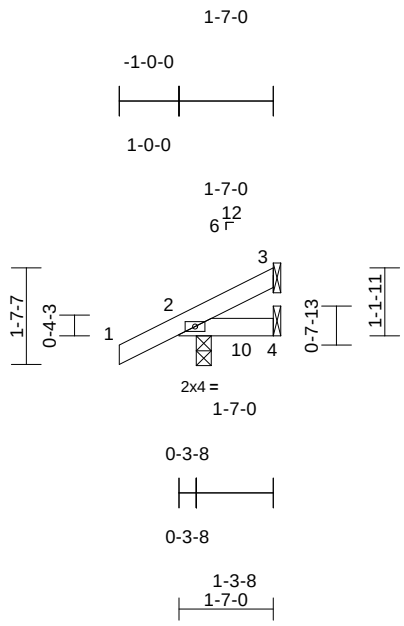

Scale = 1:38.6

Loading	(psf)	Spacing	2-0-0	CSI		DEFL	in	(loc)	l/defl	L/d	PLATES	GRIP
TCLL (roof)	20.0	Plate Grip DOL	1.15	TC	0.10	Vert(LL)	0.00	4-9	>999	360	MT20	244/190
Snow (Pf/Pg)	15.4/20.0	Lumber DOL	1.15	BC	0.20	Vert(CT)	0.00	4-9	>999	240		
TCDL	10.0	Rep Stress Incr	YES	WB	0.00	Horz(CT)	0.00	2	n/a	n/a		
BCLL	0.0*	Code	IRC2021/TPI2014	Matrix-MP		Wind(LL)	0.00	4-9	>999	240		
BCDL	10.0										Weight: 7 lb	FT = 20%

LUMBER
TOP CHORD 2x4 SP No.2
BOT CHORD 2x4 SP No.2

BRACING
TOP CHORD Structural wood sheathing directly applied or 1-7-0 oc purlins.
BOT CHORD 10-0-0 oc bracing.

REACTIONS (size) 2=0-3-0, 4= Mechanical
Max Horiz 2=24 (LC 16)
Max Uplift 2=-5 (LC 12), 4=-46 (LC 36)
Max Grav 2=382 (LC 36), 4=265 (LC 47)

FORCES (lb) - Maximum Compression/Maximum Tension
TOP CHORD 1-2=0/36, 2-3=-96/180
BOT CHORD 2-4=-164/145

NOTES
1) Wind: ASCE 7-16; Vult=120mph (3-second gust) Vasd=95mph; TCDL=6.0psf; BCDL=6.0psf; h=25ft; Cat. II; Exp B; Enclosed; MWFRS (envelope) and C-C Exterior(2E) zone; cantilever left and right exposed ; end vertical left and right exposed; porch left and right exposed;C-C for members and forces & MWFRS for reactions shown; Lumber DOL=1.60 plate grip DOL=1.60
2) Truss designed for wind loads in the plane of the truss only. For studs exposed to wind (normal to the face), see Standard Industry Gable End Details as applicable, or consult qualified building designer as per ANSI/TPI 1.
3) TCLL: ASCE 7-16; Pr=20.0 psf (roof LL: Lum DOL=1.15 Plate DOL=1.15); Pg=20.0 psf; Pf=15.4 psf (Lum DOL = 1.15 Plate DOL = 1.15); Is=1.0; Rough Cat B; Partially Exp.; Ce=1.0; Cs=1.00; Ct=1.10
4) Unbalanced snow loads have been considered for this design.
5) This truss has been designed for greater of min roof live load of 12.0 psf or 2.00 times flat roof load of 15.4 psf on overhangs non-concurrent with other live loads.
6) Plates checked for a plus or minus 5 degree rotation about its center.
7) Truss to be fully sheathed from one face or securely braced against lateral movement (i.e. diagonal web).
8) Gable studs spaced at 2-0-0 oc.
9) This truss has been designed for a 10.0 psf bottom chord live load nonconcurrent with any other live loads.
10) * This truss has been designed for a live load of 20.0psf on the bottom chord in all areas where a rectangle 3-06-00 tall by 2-00-00 wide will fit between the bottom chord and any other members.
11) Refer to girder(s) for truss to truss connections.
12) Provide mechanical connection (by others) of truss to bearing plate capable of withstanding 46 lb uplift at joint 4.
13) One H2.5A Simpson Strong-Tie connectors recommended to connect truss to bearing walls due to UPLIFT at jt(s) 2. This connection is for uplift only and does not consider lateral forces.
14) This truss has been designed for a moving concentrated load of 250.0lb live and 3.0lb dead located at all mid panels and at all panel points along the Top Chord and Bottom Chord, nonconcurrent with any other live loads.

LOAD CASE(S) Standard

NORTH CAROLINA PROFESSIONAL SEAL 036322 ENGINEER ERIC A. GILBERT

May 28,2025

WARNING - Verify design parameters and READ NOTES ON THIS AND INCLUDED MITEK REFERENCE PAGE MII-7473 rev. 1/2/2023 BEFORE USE.
Design valid for use only with MiTek® connectors. This design is based only upon parameters shown, and is for an individual building component, not a truss system. Before use, the building designer must verify the applicability of design parameters and properly incorporate this design into the overall building design. Bracing indicated is to prevent buckling of individual truss web and/or chord members only. Additional temporary and permanent bracing is always required for stability and to prevent collapse with possible personal injury and property damage. For general guidance regarding the fabrication, storage, delivery, erection and bracing of trusses and truss systems, see **ANSI/TPI1 Quality Criteria and DSB-22** available from Truss Plate Institute (www.tpinst.org) and **BCSI Building Component Safety Information** available from the Structural Building Component Association (www.sbcacomponents.com)

ENGINEERING BY TRENCO A MiTek Affiliate
818 Soundside Road
Edenton, NC 27932

Job	Truss	Truss Type	Qty	Ply	Elmhurst Rev 3-Elev 5-Roof
	P1G	Monopitch Supported Gable	1	1	I73750758 Job Reference (optional)

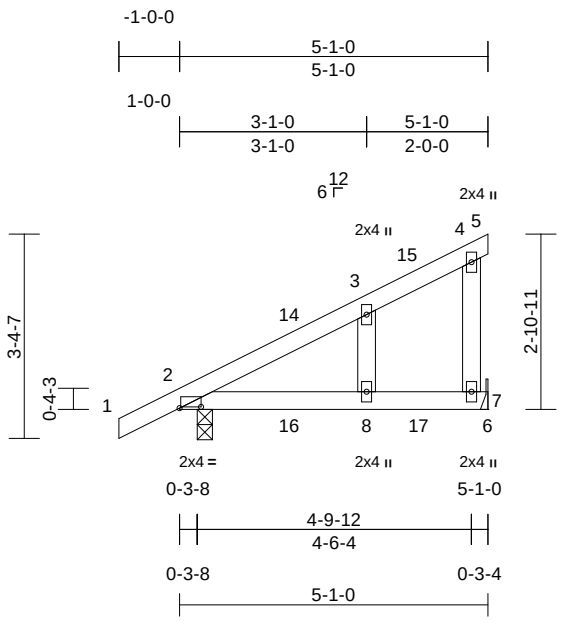

Scale = 1:38

Plate Offsets (X, Y): [2:0-4-4,0-0-4]

Loading	(psf)	Spacing	2-0-0	CSI		DEFL	in	(loc)	l/defl	L/d	PLATES	GRIP
TCLL (roof)	20.0	Plate Grip DOL	1.15	TC	0.46	Vert(LL)	-0.05	8-13	>999	360	MT20	244/190
Snow (Pf/Pg)	15.4/20.0	Lumber DOL	1.15	BC	0.48	Vert(CT)	-0.08	8-13	>752	240		
TCDL	10.0	Rep Stress Incr	YES	WB	0.05	Horz(CT)	0.00	2	n/a	n/a		
BCLL	0.0*	Code	IRC2021/TPI2014	Matrix-AS		Wind(LL)	0.04	8-13	>999	240		
BCDL	10.0										Weight: 23 lb	FT = 20%

LUMBER

TOP CHORD 2x4 SP No.2
BOT CHORD 2x4 SP No.2
WEBS 2x4 SP No.3
OTHERS 2x4 SP No.3

BRACING

TOP CHORD Structural wood sheathing directly applied, except end verticals.
BOT CHORD Rigid ceiling directly applied.

REACTIONS (size) 2=0-3-0, 7= Mechanical
Max Horiz 2=68 (LC 15)
Max Uplift 2=-6 (LC 12), 7=-29 (LC 13)
Max Grav 2=395 (LC 40), 7=351 (LC 44)

FORCES (lb) - Maximum Compression/Maximum Tension
TOP CHORD 1-2=0/36, 2-3=-119/181, 3-4=-83/86, 4-5=-10/0, 4-7=-300/114
BOT CHORD 2-8=-158/143, 7-8=-36/39, 6-7=0/0
WEBS 3-8=-132/119

NOTES

1) Wind: ASCE 7-16; Vult=120mph (3-second gust) Vasd=95mph; TCDL=6.0psf; BCDL=6.0psf; h=25ft; Cat. II; Exp B; Enclosed; MWFRS (envelope) and C-C Exterior(2E) -1-0-0 to 2-0-0, Interior (1) 2-0-0 to 5-1-0 zone; cantilever left and right exposed ; end vertical left and right exposed; porch left and right exposed;C-C for members and forces & MWFRS for reactions shown; Lumber DOL=1.60 plate grip DOL=1.60
2) Truss designed for wind loads in the plane of the truss only. For studs exposed to wind (normal to the face), see Standard Industry Gable End Details as applicable, or consult qualified building designer as per ANSI/TPI 1.
3) TCLL: ASCE 7-16; Pr=20.0 psf (roof LL: Lum DOL=1.15 Plate DOL=1.15); Pg=20.0 psf; Pf=15.4 psf (Lum DOL = 1.15 Plate DOL = 1.15); Is=1.0; Rough Cat B; Partially Exp.; Ce=1.0; Cs=1.00; Ct=1.10
4) Unbalanced snow loads have been considered for this design.
5) This truss has been designed for greater of min roof live load of 12.0 psf or 2.00 times flat roof load of 15.4 psf on overhangs non-concurrent with other live loads.
6) Plates checked for a plus or minus 5 degree rotation about its center.
7) Gable studs spaced at 2-0-0 oc.
8) This truss has been designed for a 10.0 psf bottom chord live load nonconcurrent with any other live loads.
9) * This truss has been designed for a live load of 20.0psf on the bottom chord in all areas where a rectangle 3-06-00 tall by 2-00-00 wide will fit between the bottom chord and any other members.
10) Refer to girder(s) for truss to truss connections.
11) Provide mechanical connection (by others) of truss to bearing plate capable of withstanding 29 lb uplift at joint 7.
12) One H2.5A Simpson Strong-Tie connectors recommended to connect truss to bearing walls due to UPLIFT at jt(s) 2. This connection is for uplift only and does not consider lateral forces.
13) This truss has been designed for a moving concentrated load of 250.0lb live and 3.0lb dead located at all mid panels and at all panel points along the Top Chord and Bottom Chord, nonconcurrent with any other live loads.
14) This truss design requires that a minimum of 7/16" structural wood sheathing be applied directly to the top chord and 1/2" gypsum sheetrock be applied directly to the bottom chord.

LOAD CASE(S) Standard

May 28,2025

WARNING - Verify design parameters and READ NOTES ON THIS AND INCLUDED MITEK REFERENCE PAGE MII-7473 rev. 1/2/2023 BEFORE USE.
Design valid for use only with MiTek® connectors. This design is based only upon parameters shown, and is for an individual building component, not a truss system. Before use, the building designer must verify the applicability of design parameters and properly incorporate this design into the overall building design. Bracing indicated is to prevent buckling of individual truss web and/or chord members only. Additional temporary and permanent bracing is always required for stability and to prevent collapse with possible personal injury and property damage. For general guidance regarding the fabrication, storage, delivery, erection and bracing of trusses and truss systems, see **ANSI/TPI1 Quality Criteria and DSB-22** available from Truss Plate Institute (www.tpinst.org) and **BCSI Building Component Safety Information** available from the Structural Building Component Association (www.sbcacomponents.com)

ENGINEERING BY TRENCO A MiTek Affiliate
818 Soundside Road
Edenton, NC 27932

Job	Truss	Truss Type	Qty	Ply	Elmhurst Rev 3-Elev 5-Roof
	P1	Monopitch	8	1	I73750759 Job Reference (optional)

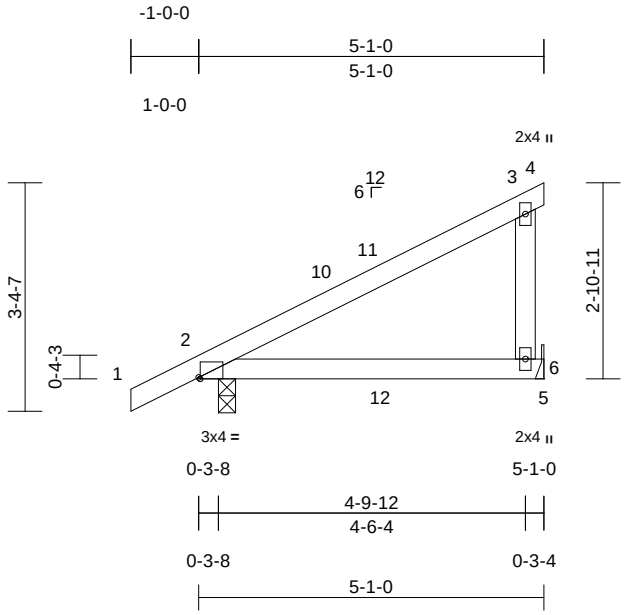

Scale = 1:33.9

Plate Offsets (X, Y): [2:0-0-4,Edge]

Loading	(psf)	Spacing	2-0-0	CSI		DEFL	in	(loc)	l/defl	L/d	PLATES	GRIP
TCLL (roof)	20.0	Plate Grip DOL	1.15	TC	0.63	Vert(LL)	-0.09	6-9	>673	360	MT20	244/190
Snow (Pf/Pg)	15.4/20.0	Lumber DOL	1.15	BC	0.70	Vert(CT)	-0.12	6-9	>496	240		
TCDL	10.0	Rep Stress Incr	YES	WB	0.00	Horz(CT)	0.00	2	n/a	n/a		
BCLL	0.0*	Code	IRC2021/TPI2014	Matrix-AS		Wind(LL)	0.04	6-9	>999	240		
BCDL	10.0										Weight: 21 lb	FT = 20%

LUMBER
TOP CHORD 2x4 SP No.2
BOT CHORD 2x4 SP No.2
WEBS 2x4 SP No.3

BRACING
TOP CHORD Structural wood sheathing directly applied, except end verticals.
BOT CHORD Rigid ceiling directly applied.

REACTIONS (size) 2=0-3-0, 6= Mechanical
Max Horiz 2=68 (LC 15)
Max Uplift 2=-5 (LC 12), 6=-28 (LC 13)
Max Grav 2=371 (LC 40), 6=358 (LC 42)

FORCES (lb) - Maximum Compression/Maximum Tension
TOP CHORD 1-2=0/36, 2-3=-145/78, 3-4=-10/0, 3-6=-306/140
BOT CHORD 2-6=-64/109, 5-6=0/0

NOTES
1) Wind: ASCE 7-16; Vult=120mph (3-second gust) Vasd=95mph; TCDL=6.0psf; BCDL=6.0psf; h=25ft; Cat. II; Exp B; Enclosed; MWFRS (envelope) and C-C Exterior(2E) -1-0-0 to 2-0-0, Interior (1) 2-0-0 to 5-1-0 zone; cantilever left and right exposed ; end vertical left and right exposed; porch left and right exposed;C-C for members and forces & MWFRS for reactions shown; Lumber DOL=1.60 plate grip DOL=1.60
2) TCLL: ASCE 7-16; Pr=20.0 psf (roof LL: Lum DOL=1.15 Plate DOL=1.15); Pg=20.0 psf; Pf=15.4 psf (Lum DOL = 1.15 Plate DOL = 1.15); Is=1.0; Rough Cat B; Partially Exp.; Ce=1.0; Cs=1.00; Ct=1.10
3) Unbalanced snow loads have been considered for this design.
4) This truss has been designed for greater of min roof live load of 12.0 psf or 2.00 times flat roof load of 15.4 psf on overhangs non-concurrent with other live loads.
5) Plates checked for a plus or minus 5 degree rotation about its center.
6) This truss has been designed for a 10.0 psf bottom chord live load nonconcurrent with any other live loads.
7) * This truss has been designed for a live load of 20.0psf on the bottom chord in all areas where a rectangle 3-06-00 tall by 2-00-00 wide will fit between the bottom chord and any other members.
8) Refer to girder(s) for truss to truss connections.
9) Provide mechanical connection (by others) of truss to bearing plate capable of withstanding 28 lb uplift at joint 6.
10) One H2.5A Simpson Strong-Tie connectors recommended to connect truss to bearing walls due to UPLIFT at jt(s) 2. This connection is for uplift only and does not consider lateral forces.
11) This truss has been designed for a moving concentrated load of 250.0lb live and 3.0lb dead located at all mid panels and at all panel points along the Top Chord and Bottom Chord, nonconcurrent with any other live loads.
12) This truss design requires that a minimum of 7/16" structural wood sheathing be applied directly to the top chord and 1/2" gypsum sheetrock be applied directly to the bottom chord.

LOAD CASE(S) Standard

May 28,2025

WARNING - Verify design parameters and READ NOTES ON THIS AND INCLUDED MITEK REFERENCE PAGE MII-7473 rev. 1/2/2023 BEFORE USE.
Design valid for use only with MiTek® connectors. This design is based only upon parameters shown, and is for an individual building component, not a truss system. Before use, the building designer must verify the applicability of design parameters and properly incorporate this design into the overall building design. Bracing indicated is to prevent buckling of individual truss web and/or chord members only. Additional temporary and permanent bracing is always required for stability and to prevent collapse with possible personal injury and property damage. For general guidance regarding the fabrication, storage, delivery, erection and bracing of trusses and truss systems, see **ANSI/TPI1 Quality Criteria and DSB-22** available from Truss Plate Institute (www.tpinst.org) and **BCSI Building Component Safety Information** available from the Structural Building Component Association (www.sbcacomponents.com)

ENGINEERING BY TRENCO A MiTek Affiliate
818 Soundside Road
Edenton, NC 27932

Job	Truss	Truss Type	Qty	Ply	Elmhurst Rev 3-Elev 5-Roof
	C1G	Monopitch Supported Gable	1	1	I73750762 Job Reference (optional)

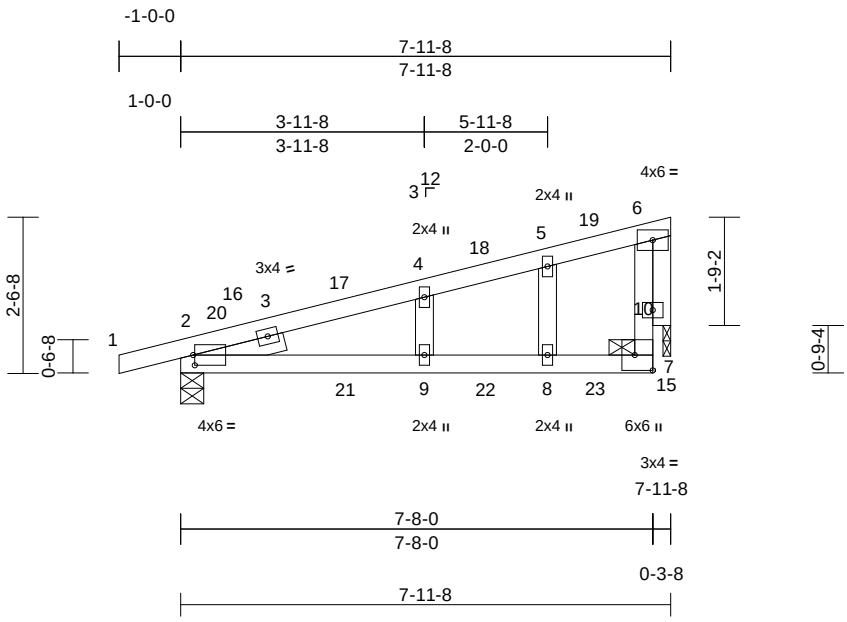

Scale = 1:37.4

Plate Offsets (X, Y): [2:0-0-5,0-2-0], [7:Edge,0-3-8]

Loading	(psf)	Spacing	2-0-0	CSI		DEFL	in	(loc)	l/defl	L/d	PLATES	GRIP
TCLL (roof)	20.0	Plate Grip DOL	1.15	TC	0.87	Vert(LL)	-0.10	9-13	>911	360	MT20	244/190
Snow (Pf/Pg)	15.4/20.0	Lumber DOL	1.15	BC	0.70	Vert(CT)	-0.17	9-13	>555	240		
TCDL	10.0	Rep Stress Incr	YES	WB	0.06	Horz(CT)	0.02	2	n/a	n/a		
BCLL	0.0*	Code	IRC2021/TPI2014	Matrix-AS		Wind(LL)	0.09	9-13	>983	240		
BCDL	10.0										Weight: 36 lb	FT = 20%

LUMBER

TOP CHORD	2x4 SP No.2
BOT CHORD	2x4 SP No.2
WEBS	2x4 SP No.3
OTHERS	2x4 SP No.3
SLIDER	Left 2x4 SP No.3 -- 1-6-0

BRACING

TOP CHORD	Structural wood sheathing directly applied, except end verticals.
BOT CHORD	10-0-0 oc bracing.

REACTIONS (size) 2=0-4-8, 15=0-1-8
Max Horiz 2=41 (LC 12)
Max Uplift 2=-68 (LC 12), 15=-48 (LC 12)
Max Grav 2=432 (LC 46), 15=378 (LC 45)

FORCES (lb) - Maximum Compression/Maximum Tension

TOP CHORD	1-2=0/24, 2-4=-449/188, 4-5=-326/153, 5-6=-273/161, 7-10=-97/326, 6-10=-127/88
BOT CHORD	2-9=-241/385, 8-9=-202/299, 7-8=-202/299
WEBS	5-8=-99/150, 4-9=-132/119, 6-15=-214/61

NOTES

1) Wind: ASCE 7-16; Vult=120mph (3-second gust) Vasd=95mph; TCDL=6.0psf; BCDL=6.0psf; h=25ft; Cat. II; Exp B; Enclosed; MWFRS (envelope) and C-C Exterior(2E) -1-0-0 to 2-0-0, Interior (1) 2-0-0 to 7-6-4 zone; cantilever left and right exposed ; end vertical left and right exposed; porch left and right exposed;C-C for members and forces & MWFRS for reactions shown; Lumber DOL=1.60 plate grip DOL=1.60
2) Truss designed for wind loads in the plane of the truss only. For studs exposed to wind (normal to the face), see Standard Industry Gable End Details as applicable, or consult qualified building designer as per ANSI/TPI 1.
3) TCLL: ASCE 7-16; Pr=20.0 psf (roof LL: Lum DOL=1.15 Plate DOL=1.15); Pg=20.0 psf; Pf=15.4 psf (Lum DOL = 1.15 Plate DOL = 1.15); Is=1.0; Rough Cat B; Partially Exp.; Ce=1.0; Cs=1.00; Ct=1.10
4) Unbalanced snow loads have been considered for this design.
5) This truss has been designed for greater of min roof live load of 12.0 psf or 2.00 times flat roof load of 15.4 psf on overhangs non-concurrent with other live loads.
6) Plates checked for a plus or minus 5 degree rotation about its center.
7) Gable studs spaced at 2-0-0 oc.
8) This truss has been designed for a 10.0 psf bottom chord live load nonconcurrent with any other live loads.
9) * This truss has been designed for a live load of 20.0psf on the bottom chord in all areas where a rectangle 3-06-00 tall by 2-00-00 wide will fit between the bottom chord and any other members.
10) Bearing at joint(s) 15 considers parallel to grain value using ANSI/TPI 1 angle to grain formula. Building designer should verify capacity of bearing surface.
11) Provide mechanical connection (by others) of truss to bearing plate at joint(s) 15.
12) One H2.5A Simpson Strong-Tie connectors recommended to connect truss to bearing walls due to UPLIFT at jt(s) 2 and 15. This connection is for uplift only and does not consider lateral forces.
13) This truss has been designed for a moving concentrated load of 250.0lb live and 3.0lb dead located at all mid panels and at all panel points along the Top Chord and Bottom Chord, nonconcurrent with any other live loads.
14) This truss design requires that a minimum of 7/16" structural wood sheathing be applied directly to the top chord.

LOAD CASE(S) Standard

May 28,2025

WARNING - Verify design parameters and READ NOTES ON THIS AND INCLUDED MITEK REFERENCE PAGE MII-7473 rev. 1/2/2023 BEFORE USE.
Design valid for use only with MiTek® connectors. This design is based only upon parameters shown, and is for an individual building component, not a truss system. Before use, the building designer must verify the applicability of design parameters and properly incorporate this design into the overall building design. Bracing indicated is to prevent buckling of individual truss web and/or chord members only. Additional temporary and permanent bracing is always required for stability and to prevent collapse with possible personal injury and property damage. For general guidance regarding the fabrication, storage, delivery, erection and bracing of trusses and truss systems, see **ANSI/TPI1 Quality Criteria and DSB-22** available from Truss Plate Institute (www.tpinst.org) and **BCSI Building Component Safety Information** available from the Structural Building Component Association (www.sbcacomponents.com)

ENGINEERING BY TRENCO A MiTek Affiliate
818 Soundside Road
Edenton, NC 27932

Job	Truss	Truss Type	Qty	Ply	Elmhurst Rev 3-Elev 5-Roof
	C1	Monopitch	5	1	I73750763 Job Reference (optional)

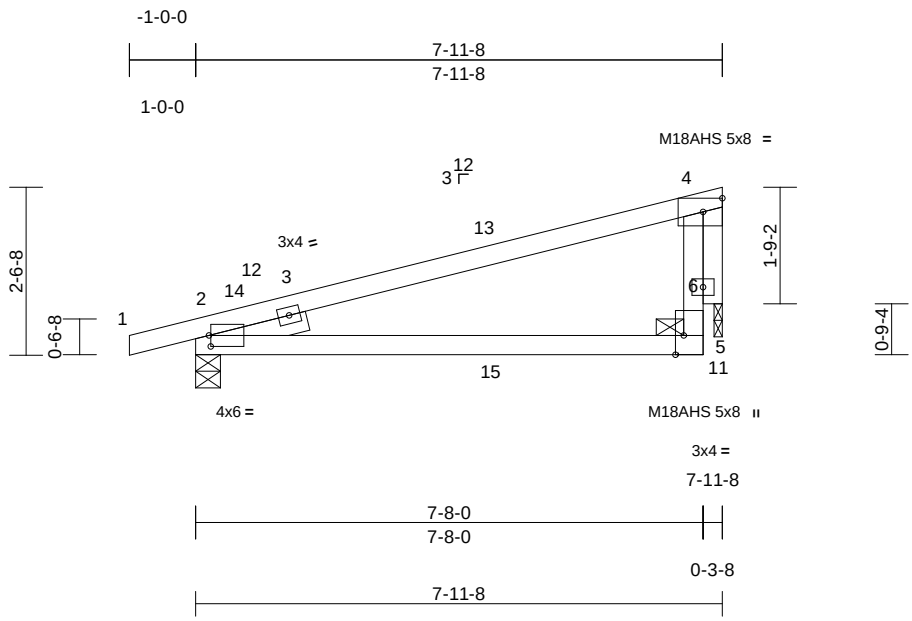

Scale = 1:34.8

Plate Offsets (X, Y): [2:0-0-5,0-2-0], [5:0-3-8,Edge]

Loading	(psf)	Spacing	2-0-0	CSI		DEFL	in	(loc)	l/defl	L/d	PLATES	GRIP
TCLL (roof)	20.0	Plate Grip DOL	1.15	TC	0.66	Vert(LL)	-0.13	5-9	>717	360	M18AHS	186/179
Snow (Pf/Pg)	15.4/20.0	Lumber DOL	1.15	BC	0.86	Vert(CT)	-0.19	5-9	>488	240	MT20	244/190
TCDL	10.0	Rep Stress Incr	YES	WB	0.00	Horz(CT)	0.02	2	n/a	n/a		
BCLL	0.0*	Code	IRC2021/TPI2014	Matrix-AS		Wind(LL)	0.08	5-9	>999	240		
BCDL	10.0										Weight: 32 lb	FT = 20%

LUMBER

TOP CHORD	2x4 SP No.2
BOT CHORD	2x4 SP No.2
WEBS	2x4 SP No.2
OTHERS	2x4 SP No.3
SLIDER	Left 2x4 SP No.3 -- 1-6-0

BRACING

TOP CHORD	Structural wood sheathing directly applied, except end verticals.
BOT CHORD	10-0-0 oc bracing.

REACTIONS (size) 2=0-4-8, 11=0-1-8
Max Horiz 2=41 (LC 12)
Max Uplift 2=-68 (LC 12), 11=-48 (LC 12)
Max Grav 2=432 (LC 44), 11=378 (LC 43)

FORCES (lb) - Maximum Compression/Maximum Tension

TOP CHORD	1-2=0/24, 2-4=-480/155, 5-6=-70/334, 4-6=-268/163
BOT CHORD	2-5=-268/371
WEBS	4-11=-236/65

NOTES

1) Wind: ASCE 7-16; Vult=120mph (3-second gust) Vasd=95mph; TCDL=6.0psf; BCDL=6.0psf; h=25ft; Cat. II; Exp B; Enclosed; MWFRS (envelope) and C-C Exterior(2E) -1-0-0 to 2-0-0, Interior (1) 2-0-0 to 7-6-4 zone; cantilever left and right exposed ; end vertical left and right exposed; porch left and right exposed;C-C for members and forces & MWFRS for reactions shown; Lumber DOL=1.60 plate grip DOL=1.60
2) TCLL: ASCE 7-16; Pr=20.0 psf (roof LL: Lum DOL=1.15 Plate DOL=1.15); Pg=20.0 psf; Pf=15.4 psf (Lum DOL = 1.15 Plate DOL = 1.15); Is=1.0; Rough Cat B; Partially Exp.; Ce=1.0; Cs=1.00; Ct=1.10
3) Unbalanced snow loads have been considered for this design.
4) This truss has been designed for greater of min roof live load of 12.0 psf or 2.00 times flat roof load of 15.4 psf on overhangs non-concurrent with other live loads.
5) All plates are MT20 plates unless otherwise indicated.
6) Plates checked for a plus or minus 5 degree rotation about its center.
7) This truss has been designed for a 10.0 psf bottom chord live load nonconcurrent with any other live loads.
8) * This truss has been designed for a live load of 20.0psf on the bottom chord in all areas where a rectangle 3-06-00 tall by 2-00-00 wide will fit between the bottom chord and any other members.
9) Bearing at joint(s) 11 considers parallel to grain value using ANSI/TPI 1 angle to grain formula. Building designer should verify capacity of bearing surface.
10) Provide mechanical connection (by others) of truss to bearing plate at joint(s) 11.
11) One H2.5A Simpson Strong-Tie connectors recommended to connect truss to bearing walls due to UPLIFT at jt(s) 2 and 11. This connection is for uplift only and does not consider lateral forces.
12) This truss has been designed for a moving concentrated load of 250.0lb live and 3.0lb dead located at all mid panels and at all panel points along the Top Chord and Bottom Chord, nonconcurrent with any other live loads.
13) This truss design requires that a minimum of 7/16" structural wood sheathing be applied directly to the top chord.

LOAD CASE(S) Standard

May 28,2025

WARNING - Verify design parameters and READ NOTES ON THIS AND INCLUDED MITEK REFERENCE PAGE MII-7473 rev. 1/2/2023 BEFORE USE.
Design valid for use only with MiTek® connectors. This design is based only upon parameters shown, and is for an individual building component, not a truss system. Before use, the building designer must verify the applicability of design parameters and properly incorporate this design into the overall building design. Bracing indicated is to prevent buckling of individual truss web and/or chord members only. Additional temporary and permanent bracing is always required for stability and to prevent collapse with possible personal injury and property damage. For general guidance regarding the fabrication, storage, delivery, erection and bracing of trusses and truss systems, see **ANSI/TPI1 Quality Criteria and DSB-22** available from Truss Plate Institute (www.tpinst.org) and **BCSI Building Component Safety Information** available from the Structural Building Component Association (www.sbcacomponents.com)

ENGINEERING BY TRENCO A MiTek Affiliate
818 Soundside Road
Edenton, NC 27932

Job	Truss	Truss Type	Qty	Ply	Elmhurst Rev 3-Elev 5-Roof
	A1GE	Hip Supported Gable	1	1	I73750765 Job Reference (optional)

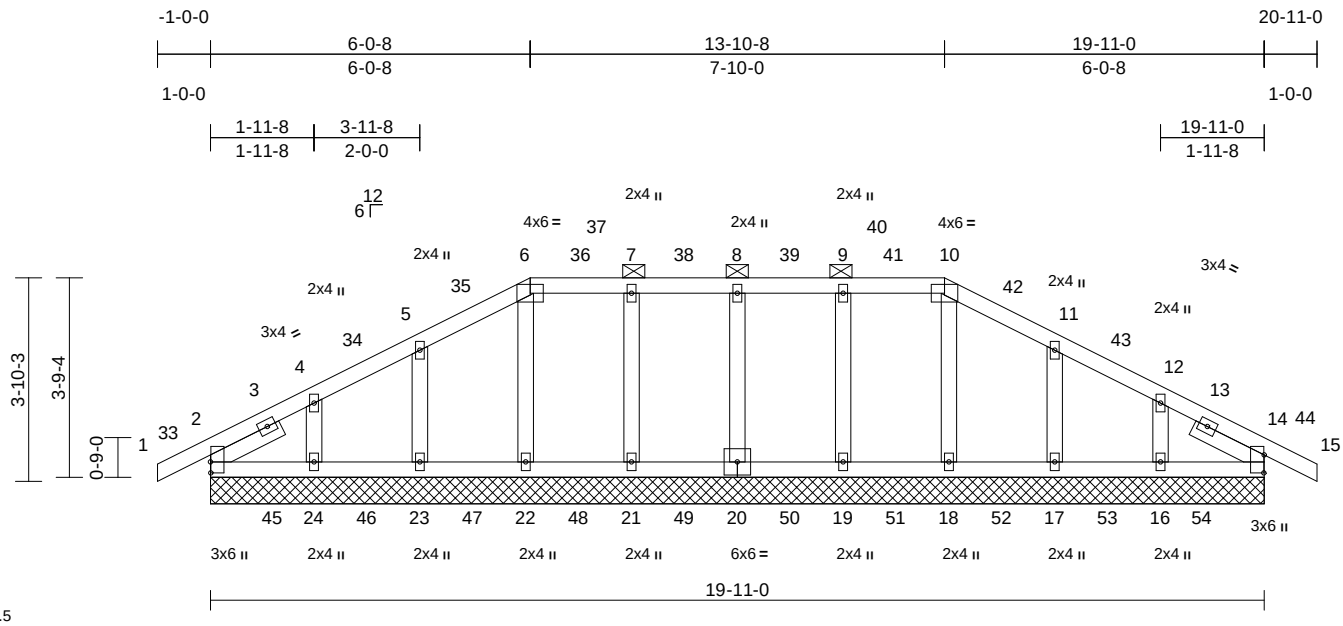

Scale = 1:43.5

Plate Offsets (X, Y): [2:0-2-8,0-0-1], [14:0-4-1,0-0-1]

Loading	(psf)	Spacing	2-0-0	CSI		DEFL	in	(loc)	l/defl	L/d	PLATES	GRIP
TCLL (roof)	20.0	Plate Grip DOL	1.15	TC	0.21	Vert(LL)	n/a	-	n/a	999	MT20	244/190
Snow (Pf/Pg)	20.4/20.0	Lumber DOL	1.15	BC	0.19	Vert(CT)	n/a	-	n/a	999		
TCDL	10.0	Rep Stress Incr	YES	WB	0.08	Horz(CT)	0.00	2	n/a	n/a		
BCLL	0.0*	Code	IRC2021/TPI2014	Matrix-AS								
BCDL	10.0										Weight: 103 lb	FT = 20%

LUMBER

TOP CHORD 2x4 SP No.2
BOT CHORD 2x4 SP No.2
OTHERS 2x4 SP No.3
SLIDER Left 2x4 SP No.3 -- 1-6-0, Right 2x4 SP No.3 -- 1-6-0

BRACING

TOP CHORD Structural wood sheathing directly applied, except
2-0-0 oc purlins (6-0-0 max.): 6-10.
BOT CHORD Rigid ceiling directly applied.

REACTIONS (size) 2=19-11-0, 14=19-11-0, 16=19-11-0, 17=19-11-0, 18=19-11-0, 19=19-11-0, 20=19-11-0, 21=19-11-0, 22=19-11-0, 23=19-11-0, 24=19-11-0
Max Horiz 2=-31 (LC 14)
Max Uplift 2=-1 (LC 12), 16=-13 (LC 17), 17=-7 (LC 17), 23=-7 (LC 16), 24=-16 (LC 16)
Max Grav 2=314 (LC 93), 14=314 (LC 117), 16=332 (LC 115), 17=336 (LC 114), 18=328 (LC 113), 19=333 (LC 112), 20=333 (LC 111), 21=333 (LC 110), 22=328 (LC 109), 23=336 (LC 108), 24=332 (LC 107)

FORCES (lb) - Maximum Compression/Maximum Tension
TOP CHORD 1-2=0/39, 2-4=-149/43, 4-5=-64/67, 5-6=-81/92, 6-7=-45/96, 7-8=-45/96, 8-9=-45/96, 9-10=-45/96, 10-11=-81/92, 11-12=-64/67, 12-14=-149/43, 14-15=0/39
BOT CHORD 2-24=-13/56, 23-24=-13/56, 22-23=-13/56, 21-22=-12/55, 19-21=-12/55, 18-19=-12/55, 17-18=-13/56, 16-17=-13/56, 14-16=-13/56
WEBS 8-20=-282/49, 7-21=-283/45, 6-22=-277/14, 5-23=-289/71, 4-24=-285/81, 9-19=-283/46, 10-18=-277/14, 11-17=-289/70, 12-16=-285/79

NOTES

1) Unbalanced roof live loads have been considered for this design.
2) Wind: ASCE 7-16; Vult=120mph (3-second gust) Vasd=95mph; TCDL=6.0psf; BCDL=6.0psf; h=25ft; Cat. II; Exp B; Enclosed; MWFRS (envelope) and C-C Corner (3E) -1-0-0 to 1-11-8, Exterior(2N) 1-11-8 to 6-0-8, Corner(3R) 6-0-8 to 9-0-8, Exterior(2N) 9-0-8 to 13-10-8, Corner(3R) 13-10-8 to 16-10-8, Exterior(2N) 16-10-8 to 20-11-0 zone; cantilever left and right exposed ; end vertical left and right exposed;C-C for members and forces & MWFRS for reactions shown; Lumber DOL=1.60 plate grip DOL=1.60
3) Truss designed for wind loads in the plane of the truss only. For studs exposed to wind (normal to the face), see Standard Industry Gable End Details as applicable, or consult qualified building designer as per ANSI/TPI 1.
4) TCLL: ASCE 7-16; Pr=20.0 psf (roof LL: Lum DOL=1.15 Plate DOL=1.15); Pg=20.0 psf; Pf=20.4 psf (Lum DOL = 1.15 Plate DOL = 1.15); Is=1.0; Rough Cat B; Partially Exp.; Ce=1.0; Cs=1.00; Ct=1.10, Lu=50-0-0
5) Unbalanced snow loads have been considered for this design.
6) This truss has been designed for greater of min roof live load of 12.0 psf or 2.00 times flat roof load of 15.4 psf on overhangs non-concurrent with other live loads.
7) Provide adequate drainage to prevent water ponding.
8) Plates checked for a plus or minus 5 degree rotation about its center.
9) Gable requires continuous bottom chord bearing.
10) Gable studs spaced at 2-0-0 oc.
11) This truss has been designed for a 10.0 psf bottom chord live load nonconcurrent with any other live loads.
12) * This truss has been designed for a live load of 20.0psf on the bottom chord in all areas where a rectangle 3-06-00 tall by 2-00-00 wide will fit between the bottom chord and any other members.
13) Provide mechanical connection (by others) of truss to bearing plate capable of withstanding 1 lb uplift at joint 2, 7 lb uplift at joint 23, 16 lb uplift at joint 24, 7 lb uplift at joint 17, 13 lb uplift at joint 16 and 1 lb uplift at joint 2.
14) This truss has been designed for a moving concentrated load of 250.0lb live and 3.0lb dead located at all mid panels and at all panel points along the Top Chord and Bottom Chord, nonconcurrent with any other live loads.
15) This truss design requires that a minimum of 7/16" structural wood sheathing be applied directly to the top chord and 1/2" gypsum sheetrock be applied directly to the bottom chord.
16) Graphical purlin representation does not depict the size or the orientation of the purlin along the top and/or bottom chord.

LOAD CASE(S) Standard

May 28,2025

WARNING - Verify design parameters and READ NOTES ON THIS AND INCLUDED MITEK REFERENCE PAGE MII-7473 rev. 1/2/2023 BEFORE USE.
Design valid for use only with MiTek® connectors. This design is based only upon parameters shown, and is for an individual building component, not a truss system. Before use, the building designer must verify the applicability of design parameters and properly incorporate this design into the overall building design. Bracing indicated is to prevent buckling of individual truss web and/or chord members only. Additional temporary and permanent bracing is always required for stability and to prevent collapse with possible personal injury and property damage. For general guidance regarding the fabrication, storage, delivery, erection and bracing of trusses and truss systems, see **ANSI/TPI1 Quality Criteria and DSB-22** available from Truss Plate Institute (www.tpinst.org) and **BCSI Building Component Safety Information** available from the Structural Building Component Association (www.sbcacomponents.com)

ENGINEERING BY TRENCO A MiTek Affiliate
818 Soundside Road
Edenton, NC 27932

Job	Truss	Truss Type	Qty	Ply	Elmhurst Rev 3-Elev 5-Roof
	A3	Common	6	1	I73750766 Job Reference (optional)

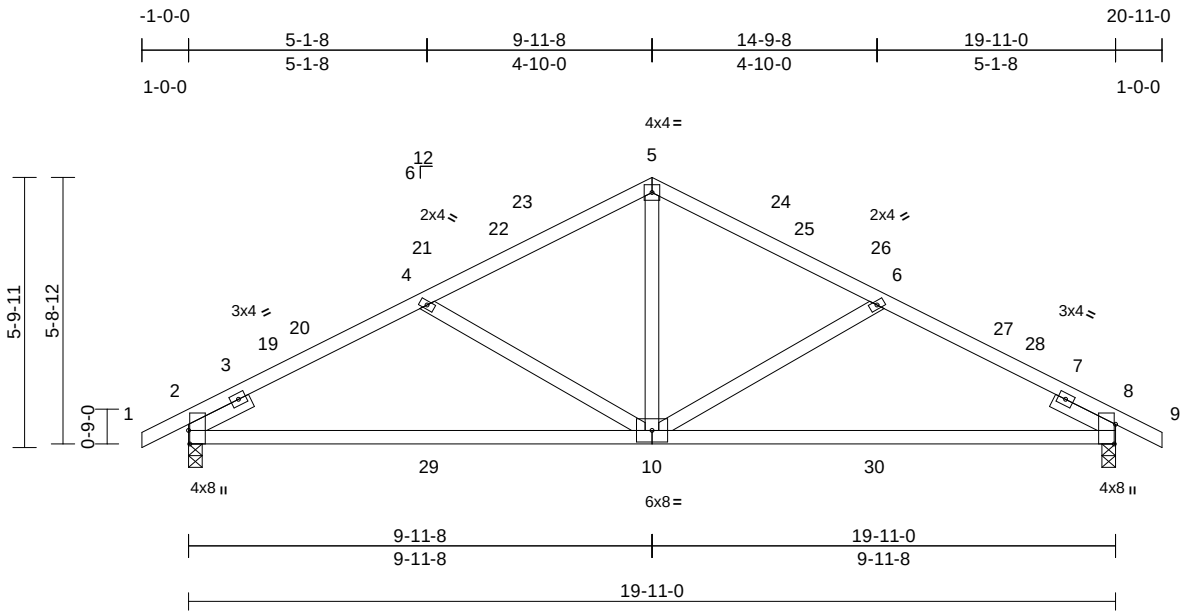

Scale = 1:49.5

Plate Offsets (X, Y): [2:0-3-8,Edge], [8:0-5-1,Edge]

Loading	(psf)	Spacing	2-0-0	CSI		DEFL	in	(loc)	l/defl	L/d	PLATES	GRIP
TCLL (roof)	20.0	Plate Grip DOL	1.15	TC	0.61	Vert(LL)	-0.38	10-13	>637	360	MT20	244/190
Snow (Pf/Pg)	15.4/20.0	Lumber DOL	1.15	BC	0.66	Vert(CT)	-0.49	10-17	>491	240		
TCDL	10.0	Rep Stress Incr	YES	WB	0.21	Horz(CT)	0.02	8	n/a	n/a		
BCLL	0.0*	Code	IRC2021/TPI2014	Matrix-AS		Wind(LL)	0.02	10	>999	240		
BCDL	10.0										Weight: 95 lb	FT = 20%

LUMBER

TOP CHORD	2x4 SP No.2
BOT CHORD	2x4 SP SS
WEBS	2x4 SP No.3
SLIDER	Left 2x4 SP No.3 -- 1-6-0, Right 2x4 SP No.3 -- 1-6-0

BRACING

TOP CHORD	Structural wood sheathing directly applied.
BOT CHORD	Rigid ceiling directly applied.

REACTIONS (size) 2=0-3-8, 8=0-3-8
Max Horiz 2=-48 (LC 14)
Max Grav 2=857 (LC 2), 8=857 (LC 2)

FORCES (lb) - Maximum Compression/Maximum Tension

TOP CHORD	1-2=0/36, 2-4=-1213/160, 4-5=-926/127, 5-6=-926/127, 6-8=-1213/160, 8-9=0/36
BOT CHORD	2-8=-100/1007
WEBS	5-10=0/522, 6-10=-335/120, 4-10=-335/120

NOTES

1) Unbalanced roof live loads have been considered for this design.
2) Wind: ASCE 7-16; Vult=120mph (3-second gust) Vasd=95mph; TCDL=6.0psf; BCDL=6.0psf; h=25ft; Cat. II; Exp B; Enclosed; MWFRS (envelope) and C-C Exterior(2E) -1-0-0 to 2-0-0, Interior (1) 2-0-0 to 9-11-8, Exterior(2R) 9-11-8 to 12-11-8, Interior (1) 12-11-8 to 20-11-0 zone; cantilever left and right exposed ; end vertical left and right exposed;C-C for members and forces & MWFRS for reactions shown; Lumber DOL=1.60 plate grip DOL=1.60
3) TCLL: ASCE 7-16; Pr=20.0 psf (roof LL: Lum DOL=1.15 Plate DOL=1.15); Pg=20.0 psf; Pf=15.4 psf (Lum DOL = 1.15 Plate DOL = 1.15); Is=1.0; Rough Cat B; Partially Exp.; Ce=1.0; Cs=1.00; Ct=1.10
4) Unbalanced snow loads have been considered for this design.
5) This truss has been designed for greater of min roof live load of 12.0 psf or 2.00 times flat roof load of 15.4 psf on overhangs non-concurrent with other live loads.
6) Plates checked for a plus or minus 5 degree rotation about its center.
7) This truss has been designed for a 10.0 psf bottom chord live load nonconcurrent with any other live loads.
8) * This truss has been designed for a live load of 20.0psf on the bottom chord in all areas where a rectangle 3-06-00 tall by 2-00-00 wide will fit between the bottom chord and any other members.
9) This truss has been designed for a moving concentrated load of 250.0lb live and 3.0lb dead located at all mid panels and at all panel points along the Top Chord and Bottom Chord, nonconcurrent with any other live loads.
10) This truss design requires that a minimum of 7/16" structural wood sheathing be applied directly to the top chord and 1/2" gypsum sheetrock be applied directly to the bottom chord.

LOAD CASE(S) Standard

May 28,2025

WARNING - Verify design parameters and READ NOTES ON THIS AND INCLUDED MITEK REFERENCE PAGE MII-7473 rev. 1/2/2023 BEFORE USE.
Design valid for use only with MiTek® connectors. This design is based only upon parameters shown, and is for an individual building component, not a truss system. Before use, the building designer must verify the applicability of design parameters and properly incorporate this design into the overall building design. Bracing indicated is to prevent buckling of individual truss web and/or chord members only. Additional temporary and permanent bracing is always required for stability and to prevent collapse with possible personal injury and property damage. For general guidance regarding the fabrication, storage, delivery, erection and bracing of trusses and truss systems, see **ANSI/TPI1 Quality Criteria and DSB-22** available from Truss Plate Institute (www.tpinst.org) and **BCSI Building Component Safety Information** available from the Structural Building Component Association (www.sbcacomponents.com)

ENGINEERING BY TRENCO A MiTek Affiliate
818 Soundside Road
Edenton, NC 27932

Job	Truss	Truss Type	Qty	Ply	Elmhurst Rev 3-Elev 5-Roof
	H2G	Hip Supported Gable	1	1	I73750767 Job Reference (optional)

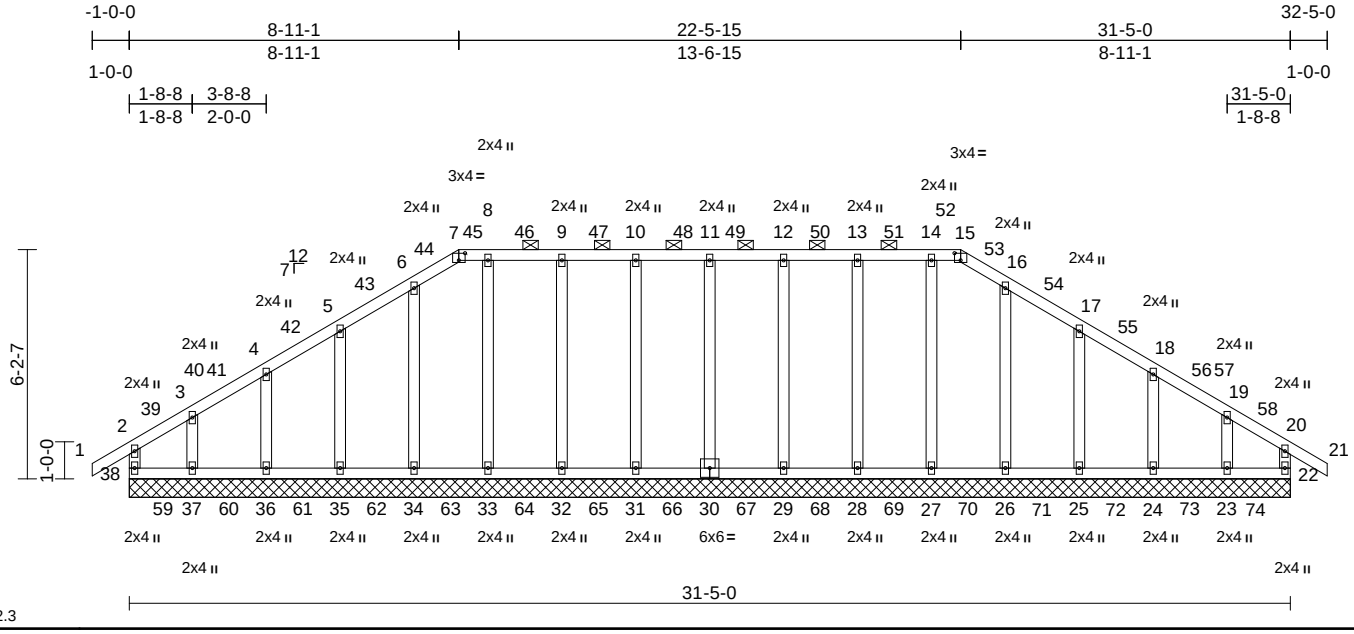

Plate Offsets (X, Y): [7:0-2-0,0-2-5], [15:0-2-0,0-2-5]

Loading	(psf)	Spacing	2-0-0	CSI		DEFL	in	(loc)	l/defl	L/d	PLATES	GRIP
TCLL (roof)	20.0	Plate Grip DOL	1.15	TC	0.20	Vert(LL)	n/a	-	n/a	999	MT20	244/190
Snow (Pf/Pg)	20.4/20.0	Lumber DOL	1.15	BC	0.19	Vert(CT)	n/a	-	n/a	999		
TCDL	10.0	Rep Stress Incr	YES	WB	0.19	Horz(CT)	0.00	22	n/a	n/a		
BCLL	0.0*	Code	IRC2021/TPI2014	Matrix-AS								
BCDL	10.0										Weight: 200 lb	FT = 20%

LUMBER

TOP CHORD 2x4 SP No.2
BOT CHORD 2x4 SP No.2
WEBS 2x4 SP No.3
OTHERS 2x4 SP No.3

BRACING

TOP CHORD Structural wood sheathing directly applied, except end verticals, and 2-0-0 oc purlins (6-0-0 max.): 7-15.
BOT CHORD Rigid ceiling directly applied.

REACTIONS (size) 22=31-5-0, 23=31-5-0, 24=31-5-0, 25=31-5-0, 26=31-5-0, 27=31-5-0, 28=31-5-0, 29=31-5-0, 30=31-5-0, 31=31-5-0, 32=31-5-0, 33=31-5-0, 34=31-5-0, 35=31-5-0, 36=31-5-0, 37=31-5-0, 38=31-5-0
Max Horiz 38=111 (LC 15)
Max Uplift 22=-12 (LC 13), 23=-35 (LC 17), 24=-5 (LC 17), 25=-17 (LC 17), 35=-17 (LC 16), 36=-4 (LC 16), 37=-41 (LC 13), 38=-36 (LC 12)
Max Grav 22=309 (LC 137), 23=320 (LC 136), 24=336 (LC 135), 25=332 (LC 134), 26=333 (LC 133), 27=333 (LC 132), 28=333 (LC 131), 29=333 (LC 130), 30=333 (LC 129), 31=333 (LC 128), 32=333 (LC 127), 33=333 (LC 126), 34=333 (LC 125), 35=332 (LC 124), 36=336 (LC 123), 37=320 (LC 122), 38=309 (LC 121)

FORCES (lb) - Maximum Compression/Maximum Tension

TOP CHORD 2-38=-293/45, 1-2=0/52, 2-3=-85/77, 3-4=-70/78, 4-5=-76/71, 5-6=-75/112, 6-7=-117/131, 7-8=-72/128, 8-9=-72/128, 9-10=-72/128, 10-11=-72/128, 11-12=-72/128, 12-13=-72/128, 13-14=-72/128, 14-15=-72/128, 15-16=-117/131, 16-17=-75/112, 17-18=-76/71, 18-19=-70/78, 19-20=-85/58, 20-21=0/52, 20-22=-293/40

BOT CHORD 37-38=-49/71, 36-37=-49/71, 35-36=-49/71, 34-35=-49/71, 33-34=-49/71, 32-33=-49/71, 31-32=-49/71, 29-31=-49/71, 28-29=-49/71, 27-28=-49/71, 26-27=-49/71, 25-26=-49/71, 24-25=-49/71, 23-24=-49/71, 22-23=-49/71

WEBS 11-30=-276/35, 10-31=-276/34, 9-32=-276/43, 8-33=-275/10, 6-34=-278/23, 5-35=-281/63, 4-36=-286/55, 3-37=-277/65, 12-29=-276/34, 13-28=-276/43, 14-27=-275/2, 16-26=-278/23, 17-25=-281/64, 18-24=-286/55, 19-23=-277/63

NOTES

1) Unbalanced roof live loads have been considered for this design.
2) Wind: ASCE 7-16; Vult=120mph (3-second gust) Vasd=95mph; TCDL=6.0psf; BCDL=6.0psf; h=25ft; Cat. II; Exp B; Enclosed; MWFRS (envelope) and C-C Corner (3E) -1-0-0 to 2-1-11, Exterior(2N) 2-1-11 to 8-11-1, Corner(3R) 8-11-1 to 12-0-12, Exterior(2N) 12-0-12 to 22-5-15, Corner(3R) 22-5-15 to 25-8-8, Exterior(2N) 25-8-8 to 32-5-0 zone; cantilever left and right exposed ; end vertical left and right exposed;C-C for members and forces & MWFRS for reactions shown; Lumber DOL=1.60 plate grip DOL=1.60
3) Truss designed for wind loads in the plane of the truss only. For studs exposed to wind (normal to the face), see Standard Industry Gable End Details as applicable, or consult qualified building designer as per ANSI/TPI 1.
4) TCLL: ASCE 7-16; Pr=20.0 psf (roof LL: Lum DOL=1.15 Plate DOL=1.15); Pg=20.0 psf; Pf=20.4 psf (Lum DOL = 1.15 Plate DOL = 1.15); Is=1.0; Rough Cat B; Partially Exp.; Ce=1.0; Cs=1.00; Ct=1.10, Lu=50-0-0
5) Unbalanced snow loads have been considered for this design.
6) This truss has been designed for greater of min roof live load of 12.0 psf or 2.00 times flat roof load of 15.4 psf on overhangs non-concurrent with other live loads.
7) Provide adequate drainage to prevent water ponding.
8) Plates checked for a plus or minus 5 degree rotation about its center.
9) Gable requires continuous bottom chord bearing.
10) Truss to be fully sheathed from one face or securely braced against lateral movement (i.e. diagonal web).
11) Gable studs spaced at 2-0-0 oc.
12) This truss has been designed for a 10.0 psf bottom chord live load nonconcurrent with any other live loads.
13) * This truss has been designed for a live load of 20.0psf on the bottom chord in all areas where a rectangle 3-06-00 tall by 2-00-00 wide will fit between the bottom chord and any other members.

May 28,2025

Continued on page 2

WARNING - Verify design parameters and READ NOTES ON THIS AND INCLUDED MITEK REFERENCE PAGE MII-7473 rev. 1/2/2023 BEFORE USE.
Design valid for use only with MiTek® connectors. This design is based only upon parameters shown, and is for an individual building component, not a truss system. Before use, the building designer must verify the applicability of design parameters and properly incorporate this design into the overall building design. Bracing indicated is to prevent buckling of individual truss web and/or chord members only. Additional temporary and permanent bracing is always required for stability and to prevent collapse with possible personal injury and property damage. For general guidance regarding the fabrication, storage, delivery, erection and bracing of trusses and truss systems, see **ANSI/TPI1 Quality Criteria and DSB-22** available from Truss Plate Institute (www.tpinst.org) and **BCSI Building Component Safety Information** available from the Structural Building Component Association (www.sbcacomponents.com)

ENGINEERING BY TRENCO A MiTek Affiliate
818 Soundside Road
Edenton, NC 27932

14) Provide mechanical connection (by others) of truss to bearing plate capable of withstanding 36 lb uplift at joint 38, 12 lb uplift at joint 22, 17 lb uplift at joint 35, 4 lb uplift at joint 36, 41 lb uplift at joint 37, 17 lb uplift at joint 25, 5 lb uplift at joint 24 and 35 lb uplift at joint 23.
15) This truss has been designed for a moving concentrated load of 250.0lb live and 3.0lb dead located at all mid panels and at all panel points along the Top Chord and Bottom Chord, nonconcurrent with any other live loads.
16) This truss design requires that a minimum of 7/16" structural wood sheathing be applied directly to the top chord and 1/2" gypsum sheetrock be applied directly to the bottom chord.
17) Graphical purlin representation does not depict the size or the orientation of the purlin along the top and/or bottom chord.

LOAD CASE(S) Standard

May 28,2025

WARNING - Verify design parameters and READ NOTES ON THIS AND INCLUDED MITEK REFERENCE PAGE MII-7473 rev. 1/2/2023 BEFORE USE.
Design valid for use only with MiTek® connectors. This design is based only upon parameters shown, and is for an individual building component, not a truss system. Before use, the building designer must verify the applicability of design parameters and properly incorporate this design into the overall building design. Bracing indicated is to prevent buckling of individual truss web and/or chord members only. Additional temporary and permanent bracing is always required for stability and to prevent collapse with possible personal injury and property damage. For general guidance regarding the fabrication, storage, delivery, erection and bracing of trusses and truss systems, see **ANSI/TPI1 Quality Criteria and DSB-22** available from Truss Plate Institute (www.tpinst.org) and **BCSI Building Component Safety Information** available from the Structural Building Component Association (www.sbcacomponents.com)

ENGINEERING BY TRENCO A MiTek Affiliate
818 Soundside Road
Edenton, NC 27932

Job	Truss	Truss Type	Qty	Ply	Elmhurst Rev 3-Elev 5-Roof
	H4	Hip	1	1	I73750768 Job Reference (optional)

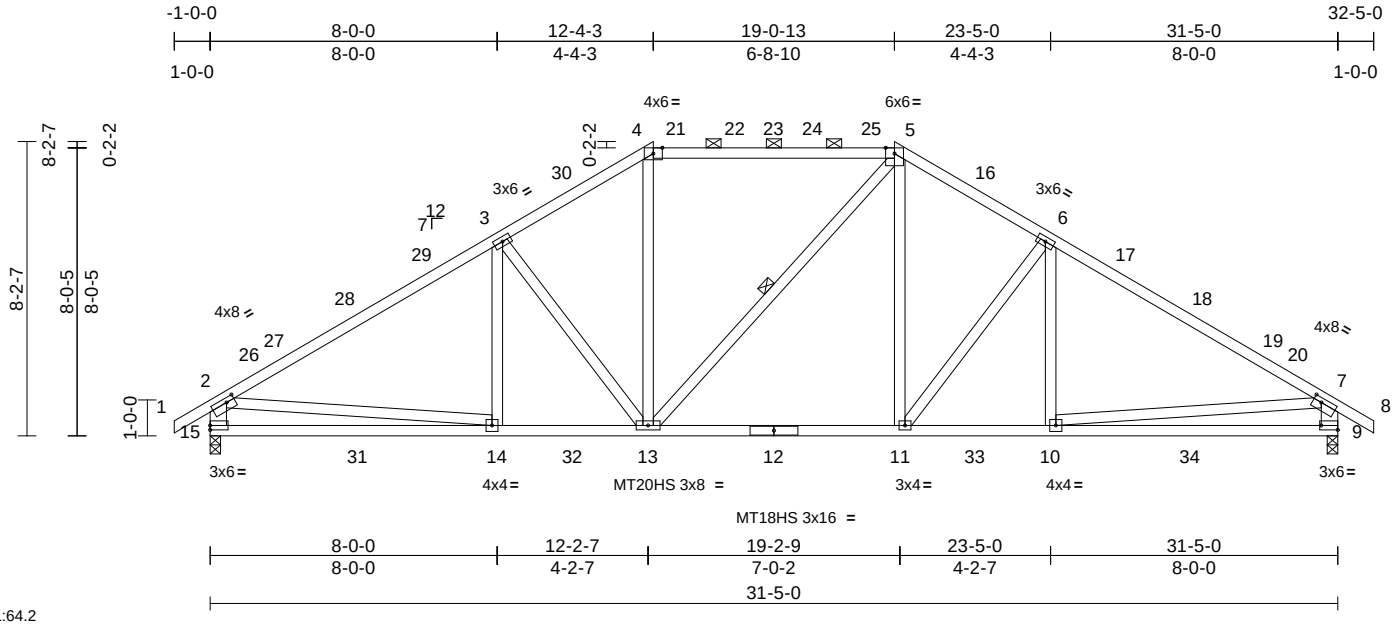

Scale = 1:64.2

Plate Offsets (X, Y): [2:0-2-12,0-1-8], [7:0-2-12,0-1-8], [9:Edge,0-1-8]

Loading	(psf)	Spacing	2-0-0	CSI		DEFL	in	(loc)	l/defl	L/d	PLATES	GRIP
TCLL (roof)	20.0	Plate Grip DOL	1.15	TC	0.86	Vert(LL)	-0.19	9-10	>999	360	MT20	244/190
Snow (Pf/Pg)	20.4/20.0	Lumber DOL	1.15	BC	0.51	Vert(CT)	-0.28	9-10	>999	240	MT18HS	244/190
TCDL	10.0	Rep Stress Incr	YES	WB	0.45	Horz(CT)	-0.04	15	n/a	n/a	MT20HS	187/143
BCLL	0.0*	Code	IRC2021/TPI2014	Matrix-AS		Wind(LL)	0.02	11	>999	240		
BCDL	10.0										Weight: 200 lb	FT = 20%

LUMBER

TOP CHORD 2x4 SP No.2 *Except* 5-4:2x4 SP SS
BOT CHORD 2x4 SP SS
WEBS 2x4 SP No.3 *Except* 9-7,15-2:2x6 SP No.2

BRACING

TOP CHORD Structural wood sheathing directly applied, except end verticals, and 2-0-0 oc purlins (5-0-15 max.): 4-5.
BOT CHORD Rigid ceiling directly applied.
WEBS 1 Row at midpt 5-13

REACTIONS (size) 9=0-3-8, 15=0-3-8
Max Horiz 9=142 (LC 15)
Max Grav 9=1582 (LC 59), 15=1576 (LC 57)

FORCES (lb) - Maximum Compression/Maximum Tension
TOP CHORD 5-6=-1900/46, 6-7=-2279/0, 7-8=0/51, 4-5=-1559/65, 1-2=0/51, 2-3=-2269/0, 3-4=-1889/46, 7-9=-1561/43, 2-15=-1555/43
BOT CHORD 14-15=-27/763, 13-14=0/1828, 11-13=0/1515, 10-11=0/1839, 9-10=-96/823
WEBS 6-10=0/293, 6-11=-519/57, 5-11=0/652, 5-13=-131/132, 4-13=0/622, 3-13=-521/57, 3-14=0/292, 7-10=0/1077, 2-14=0/1071

NOTES

1) Unbalanced roof live loads have been considered for this design.
2) Wind: ASCE 7-16; Vult=120mph (3-second gust) Vasd=95mph; TCDL=6.0psf; BCDL=6.0psf; h=25ft; Cat. II; Exp B; Enclosed; MWFRS (envelope) and C-C Exterior(2E) -1-0-0 to 2-1-11, Interior (1) 2-1-11 to 12-4-3, Exterior(2R) 12-4-3 to 16-9-8, Interior (1) 16-9-8 to 19-0-13, Exterior(2R) 19-0-13 to 23-5-0, Interior (1) 23-5-0 to 32-5-0 zone; cantilever left and right exposed ; end vertical left and right exposed;C-C for members and forces & MWFRS for reactions shown; Lumber DOL=1.60 plate grip DOL=1.60
3) TCLL: ASCE 7-16; Pr=20.0 psf (roof LL: Lum DOL=1.15 Plate DOL=1.15); Pg=20.0 psf; Pf=20.4 psf (Lum DOL = 1.15 Plate DOL = 1.15); Is=1.0; Rough Cat B; Partially Exp.; Ce=1.0; Cs=1.00; Ct=1.10, Lu=50-0-0
4) Unbalanced snow loads have been considered for this design.
5) This truss has been designed for greater of min roof live load of 12.0 psf or 2.00 times flat roof load of 15.4 psf on overhangs non-concurrent with other live loads.
6) Provide adequate drainage to prevent water ponding.
7) All plates are MT20 plates unless otherwise indicated.
8) Plates checked for a plus or minus 5 degree rotation about its center.
9) This truss has been designed for a 10.0 psf bottom chord live load nonconcurrent with any other live loads.
10) * This truss has been designed for a live load of 20.0psf on the bottom chord in all areas where a rectangle 3-06-00 tall by 2-00-00 wide will fit between the bottom chord and any other members, with BCDL = 10.0psf.
11) This truss has been designed for a moving concentrated load of 250.0lb live and 3.0lb dead located at all mid panels and at all panel points along the Top Chord and Bottom Chord, nonconcurrent with any other live loads.
12) This truss design requires that a minimum of 7/16" structural wood sheathing be applied directly to the top chord and 1/2" gypsum sheetrock be applied directly to the bottom chord.
13) Graphical purlin representation does not depict the size or the orientation of the purlin along the top and/or bottom chord.

LOAD CASE(S) Standard

May 28,2025

WARNING - Verify design parameters and READ NOTES ON THIS AND INCLUDED MITEK REFERENCE PAGE MII-7473 rev. 1/2/2023 BEFORE USE.
Design valid for use only with MiTek® connectors. This design is based only upon parameters shown, and is for an individual building component, not a truss system. Before use, the building designer must verify the applicability of design parameters and properly incorporate this design into the overall building design. Bracing indicated is to prevent buckling of individual truss web and/or chord members only. Additional temporary and permanent bracing is always required for stability and to prevent collapse with possible personal injury and property damage. For general guidance regarding the fabrication, storage, delivery, erection and bracing of trusses and truss systems, see **ANSI/TPI1 Quality Criteria and DSB-22** available from Truss Plate Institute (www.tpinst.org) and **BCSI Building Component Safety Information** available from the Structural Building Component Association (www.sbcacomponents.com)

ENGINEERING BY TRENCO A MiTek Affiliate
818 Soundside Road
Edenton, NC 27932

Job	Truss	Truss Type	Qty	Ply	Elmhurst Rev 3-Elev 5-Roof
	A1G	Hip Supported Gable	1	1	I73750770 Job Reference (optional)

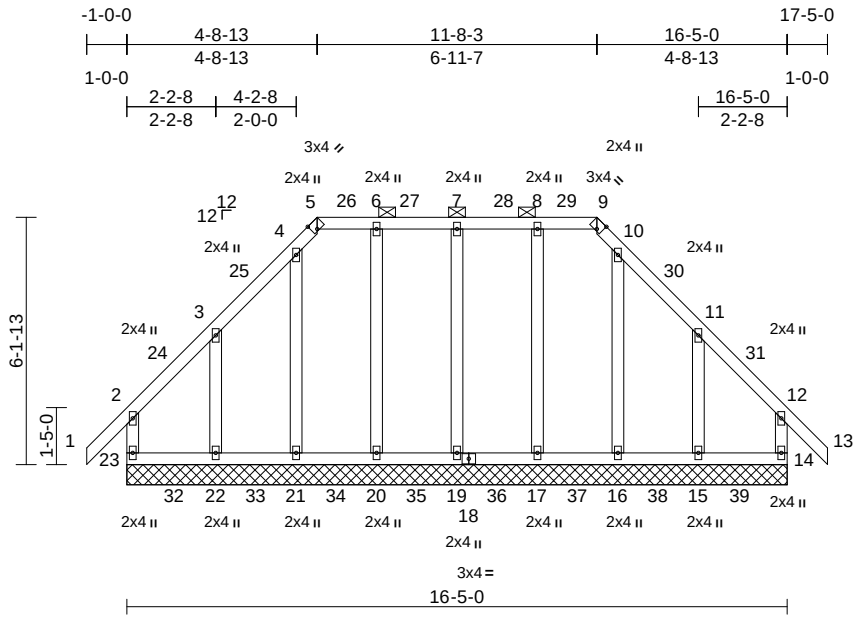

Scale = 1:57.3

Plate Offsets (X, Y): [5:0-1-8,Edge], [9:0-1-8,Edge]

Loading	(psf)	Spacing	2-0-0	CSI		DEFL	in	(loc)	l/defl	L/d	PLATES	GRIP
TCLL (roof)	20.0	Plate Grip DOL	1.15	TC	0.22	Vert(LL)	n/a	-	n/a	999	MT20	244/190
Snow (Pf/Pg)	20.4/20.0	Lumber DOL	1.15	BC	0.22	Vert(CT)	n/a	-	n/a	999		
TCDL	10.0	Rep Stress Incr	YES	WB	0.19	Horz(CT)	0.00	14	n/a	n/a		
BCLL	0.0*	Code	IRC2021/TPI2014	Matrix-MR								
BCDL	10.0										Weight: 112 lb	FT = 20%

LUMBER

TOP CHORD 2x4 SP No.2
BOT CHORD 2x4 SP No.2
WEBS 2x4 SP No.3
OTHERS 2x4 SP No.3

BRACING

TOP CHORD Structural wood sheathing directly applied or 6-0-0 oc purlins, except end verticals, and 2-0-0 oc purlins (6-0-0 max.): 5-9.
BOT CHORD Rigid ceiling directly applied or 6-0-0 oc bracing.

REACTIONS (size) 14=16-5-0, 15=16-5-0, 16=16-5-0, 17=16-5-0, 19=16-5-0, 20=16-5-0, 21=16-5-0, 22=16-5-0, 23=16-5-0
Max Horiz 23=-121 (LC 14)
Max Uplift 14=-42 (LC 13), 15=-79 (LC 17), 19=-2 (LC 12), 22=-80 (LC 16), 23=-49 (LC 12)
Max Grav 14=318 (LC 105), 15=335 (LC 104), 16=332 (LC 103), 17=333 (LC 102), 19=333 (LC 101), 20=333 (LC 100), 21=332 (LC 99), 22=335 (LC 98), 23=318 (LC 97)

FORCES (lb) - Maximum Compression/Maximum Tension
TOP CHORD 2-23=-298/131, 1-2=0/83, 2-3=-125/104, 3-4=-108/206, 4-5=-170/169, 5-6=-77/186, 6-7=-77/186, 7-8=-77/186, 8-9=-77/186, 9-10=-170/168, 10-11=-110/207, 11-12=-125/99, 12-13=0/83, 12-14=-298/129
BOT CHORD 22-23=-62/67, 21-22=-62/67, 20-21=-62/67, 19-20=-62/67, 17-19=-62/67, 16-17=-62/67, 15-16=-62/67, 14-15=-62/67
WEBS 7-19=-276/80, 6-20=-276/9, 4-21=-279/5, 3-22=-285/163, 8-17=-276/7, 10-16=-279/5, 11-15=-285/164

NOTES

1) Unbalanced roof live loads have been considered for this design.
2) Wind: ASCE 7-16; Vult=120mph (3-second gust) Vasd=95mph; TCDL=6.0psf; BCDL=6.0psf; h=25ft; Cat. II; Exp B; Enclosed; MWFRS (envelope) and C-C Corner (3E) -1-0-0 to 2-2-8, Exterior(2N) 2-2-8 to 4-8-13, Corner (3R) 4-8-13 to 7-8-13, Exterior(2N) 7-8-13 to 11-8-3, Corner(3R) 11-8-3 to 14-8-3, Exterior(2N) 14-8-3 to 17-5-0 zone; cantilever left and right exposed ; end vertical left and right exposed;C-C for members and forces & MWFRS for reactions shown; Lumber DOL=1.60 plate grip DOL=1.60
3) Truss designed for wind loads in the plane of the truss only. For studs exposed to wind (normal to the face), see Standard Industry Gable End Details as applicable, or consult qualified building designer as per ANSI/TPI 1.
4) TCLL: ASCE 7-16; Pr=20.0 psf (roof LL: Lum DOL=1.15 Plate DOL=1.15); Pg=20.0 psf; Pf=20.4 psf (Lum DOL = 1.15 Plate DOL = 1.15); Is=1.0; Rough Cat B; Partially Exp.; Ce=1.0; Cs=1.00; Ct=1.10, Lu=50-0-0
5) Unbalanced snow loads have been considered for this design.
6) This truss has been designed for greater of min roof live load of 12.0 psf or 2.00 times flat roof load of 15.4 psf on overhangs non-concurrent with other live loads.
7) Provide adequate drainage to prevent water ponding.
8) Plates checked for a plus or minus 5 degree rotation about its center.
9) Gable requires continuous bottom chord bearing.
10) Truss to be fully sheathed from one face or securely braced against lateral movement (i.e. diagonal web).
11) Gable studs spaced at 2-0-0 oc.
12) This truss has been designed for a 10.0 psf bottom chord live load nonconcurrent with any other live loads.
13) * This truss has been designed for a live load of 20.0psf on the bottom chord in all areas where a rectangle 3-06-00 tall by 2-00-00 wide will fit between the bottom chord and any other members.
14) Provide mechanical connection (by others) of truss to bearing plate capable of withstanding 42 lb uplift at joint 14, 49 lb uplift at joint 23, 2 lb uplift at joint 19, 80 lb uplift at joint 22 and 79 lb uplift at joint 15.
15) This truss has been designed for a moving concentrated load of 250.0lb live and 3.0lb dead located at all mid panels and at all panel points along the Top Chord and Bottom Chord, nonconcurrent with any other live loads.
16) Graphical purlin representation does not depict the size or the orientation of the purlin along the top and/or bottom chord.

LOAD CASE(S) Standard

May 28,2025

WARNING - Verify design parameters and READ NOTES ON THIS AND INCLUDED MITEK REFERENCE PAGE MII-7473 rev. 1/2/2023 BEFORE USE.
Design valid for use only with MiTek® connectors. This design is based only upon parameters shown, and is for an individual building component, not a truss system. Before use, the building designer must verify the applicability of design parameters and properly incorporate this design into the overall building design. Bracing indicated is to prevent buckling of individual truss web and/or chord members only. Additional temporary and permanent bracing is always required for stability and to prevent collapse with possible personal injury and property damage. For general guidance regarding the fabrication, storage, delivery, erection and bracing of trusses and truss systems, see **ANSI/TPI1 Quality Criteria and DSB-22** available from Truss Plate Institute (www.tpinst.org) and **BCSI Building Component Safety Information** available from the Structural Building Component Association (www.sbcacomponents.com)

ENGINEERING BY TRENCO A MiTek Affiliate
818 Soundside Road
Edenton, NC 27932

Job	Truss	Truss Type	Qty	Ply	Elmhurst Rev 3-Elev 5-Roof
	A1GR	Hip Girder	2	**2**	I73750771 Job Reference (optional)

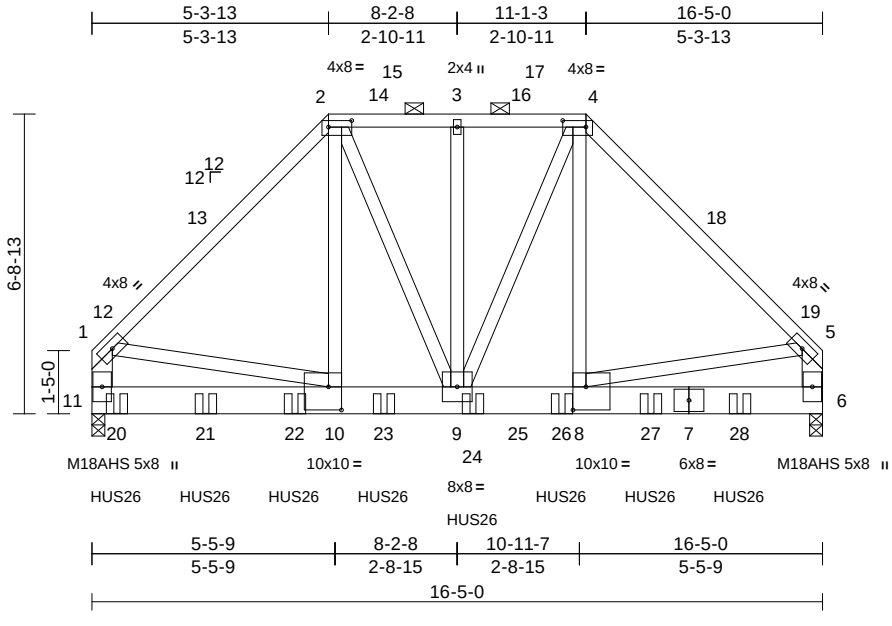

Scale = 1:51.8

Plate Offsets (X, Y): [2:0-6-4,0-1-12], [4:0-6-4,0-1-12], [8:0-3-8,0-6-4], [10:0-3-8,0-6-4]

Loading	(psf)	**Spacing**	2-0-0	**CSI**		**DEFL**	in	(loc)	l/defl	L/d	**PLATES**	**GRIP**
TCLL (roof)	20.0	Plate Grip DOL	1.15	TC	0.73	Vert(LL)	-0.05	6-8	>999	360	MT20	244/190
Snow (Pf/Pg)	20.4/20.0	Lumber DOL	1.15	BC	0.31	Vert(CT)	-0.09	6-8	>999	240	M18AHS	186/179
TCDL	10.0	Rep Stress Incr	NO	WB	0.60	Horz(CT)	0.01	6	n/a	n/a		
BCLL	0.0*	Code	IRC2021/TPI2014	Matrix-MS		Wind(LL)	0.00	10-11	>999	240		
BCDL	10.0										Weight: 292 lb	FT = 20%

LUMBER
TOP CHORD 2x4 SP No.2
BOT CHORD 2x8 SP DSS
WEBS 2x4 SP No.3 *Except* 11-1,6-5:2x6 SP No.2

BRACING
TOP CHORD Structural wood sheathing directly applied or 4-4-14 oc purlins, except end verticals, and 2-0-0 oc purlins (6-0-0 max.): 2-4.
BOT CHORD Rigid ceiling directly applied or 10-0-0 oc bracing.

REACTIONS (size) 6=0-3-8, 11=0-3-8
Max Horiz 11=109 (LC 9)
Max Grav 6=6125 (LC 47), 11=6985 (LC 2)

FORCES (lb) - Maximum Compression/Maximum Tension
TOP CHORD 1-2=-5348/0, 2-3=-4116/0, 3-4=-4116/0, 4-5=-5263/0, 1-11=-4478/0, 5-6=-4402/0
BOT CHORD 10-11=0/960, 9-10=0/3740, 8-9=0/3713, 6-8=0/1041
WEBS 2-10=0/2660, 2-9=0/1178, 3-9=-306/45, 4-9=0/1136, 4-8=0/2969, 1-10=0/2801, 5-8=0/2801

NOTES
1) 2-ply truss to be connected together with 10d (0.131"x3") nails as follows:
Top chords connected as follows: 2x4 - 1 row at 0-9-0 oc, 2x6 - 2 rows staggered at 0-9-0 oc.
Bottom chords connected as follows: 2x8 - 2 rows staggered at 0-5-0 oc.
Web connected as follows: 2x4 - 1 row at 0-9-0 oc.
2) All loads are considered equally applied to all plies, except if noted as front (F) or back (B) face in the LOAD CASE(S) section. Ply to ply connections have been provided to distribute only loads noted as (F) or (B), unless otherwise indicated.
3) Unbalanced roof live loads have been considered for this design.
4) Wind: ASCE 7-16; Vult=120mph (3-second gust) Vasd=95mph; TCDL=6.0psf; BCDL=6.0psf; h=25ft; Cat. II; Exp B; Enclosed; MWFRS (envelope); cantilever left and right exposed ; end vertical left and right exposed; Lumber DOL=1.60 plate grip DOL=1.60
5) TCLL: ASCE 7-16; Pr=20.0 psf (roof LL: Lum DOL=1.15 Plate DOL=1.15); Pg=20.0 psf; Pf=20.4 psf (Lum DOL = 1.15 Plate DOL = 1.15); Is=1.0; Rough Cat B; Partially Exp.; Ce=1.0; Cs=1.00; Ct=1.10, Lu=50-0-0
6) Unbalanced snow loads have been considered for this design.
7) Provide adequate drainage to prevent water ponding.
8) All plates are MT20 plates unless otherwise indicated.
9) Plates checked for a plus or minus 5 degree rotation about its center.
10) This truss has been designed for a 10.0 psf bottom chord live load nonconcurrent with any other live loads.
11) * This truss has been designed for a live load of 20.0psf on the bottom chord in all areas where a rectangle 3-06-00 tall by 2-00-00 wide will fit between the bottom chord and any other members.
12) This truss has been designed for a moving concentrated load of 250.0lb live and 3.0lb dead located at all mid panels and at all panel points along the Top Chord and Bottom Chord, nonconcurrent with any other live loads.
13) Graphical purlin representation does not depict the size or the orientation of the purlin along the top and/or bottom chord.
14) Use Simpson Strong-Tie HUS26 (14-10d Girder, 4-10d Truss) or equivalent spaced at 2-0-0 oc max. starting at 0-6-12 from the left end to 14-6-12 to connect truss(es) to back face of bottom chord.
15) Fill all nail holes where hanger is in contact with lumber.

LOAD CASE(S) Standard
1) Dead + Snow (balanced): Lumber Increase=1.15, Plate Increase=1.15
Uniform Loads (lb/ft)
Vert: 1-2=-51, 2-4=-61, 4-5=-51, 6-11=-20
Concentrated Loads (lb)
Vert: 20=-1335 (B), 21=-1328 (B), 22=-1328 (B), 23=-1328 (B), 24=-1328 (B), 26=-1201 (B), 27=-1634 (B), 28=-1579 (B)

May 28,2025

WARNING - Verify design parameters and READ NOTES ON THIS AND INCLUDED MITEK REFERENCE PAGE MII-7473 rev. 1/2/2023 BEFORE USE.
Design valid for use only with MiTek® connectors. This design is based only upon parameters shown, and is for an individual building component, not a truss system. Before use, the building designer must verify the applicability of design parameters and properly incorporate this design into the overall building design. Bracing indicated is to prevent buckling of individual truss web and/or chord members only. Additional temporary and permanent bracing is always required for stability and to prevent collapse with possible personal injury and property damage. For general guidance regarding the fabrication, storage, delivery, erection and bracing of trusses and truss systems, see **ANSI/TPI1 Quality Criteria and DSB-22** available from Truss Plate Institute (www.tpinst.org) and **BCSI Building Component Safety Information** available from the Structural Building Component Association (www.sbcacomponents.com)

ENGINEERING BY TRENCO A MiTek Affiliate
818 Soundside Road
Edenton, NC 27932

Job	Truss	Truss Type	Qty	Ply	Elmhurst Rev 3-Elev 5-Roof
	A1B	Common	1	1	I73750773 Job Reference (optional)

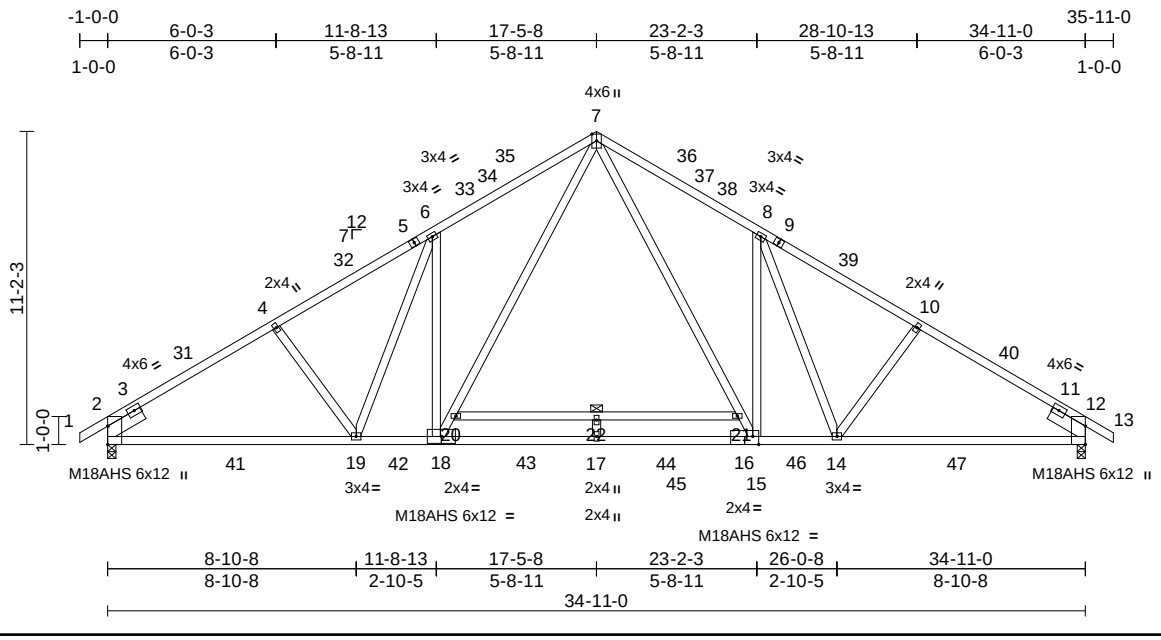

Scale = 1:82.3

Plate Offsets (X, Y): [15:0-2-9,Edge]

Loading	(psf)	Spacing	2-0-0	CSI		DEFL	in	(loc)	l/defl	L/d	PLATES	GRIP
TCLL (roof)	20.0	Plate Grip DOL	1.15	TC	0.74	Vert(LL)	-0.36	17	>999	360	MT20	244/190
Snow (Pf/Pg)	15.4/20.0	Lumber DOL	1.15	BC	0.64	Vert(CT)	-0.89	15-17	>473	240	M18AHS	186/179
TCDL	10.0	Rep Stress Incr	YES	WB	0.83	Horz(CT)	0.12	12	n/a	n/a		
BCLL	0.0*	Code	IRC2021/TPI2014	Matrix-AS		Wind(LL)	0.06	18-19	>999	240		
BCDL	10.0										Weight: 233 lb	FT = 20%

LUMBER
TOP CHORD 2x4 SP No.2 *Except* 5-1,9-13:2x4 SP SS
BOT CHORD 2x4 SP SS
WEBS 2x4 SP No.3 *Except* 20-21:2x4 SP SS
SLIDER Left 2x6 SP No.2 -- 1-6-0, Right 2x6 SP No.2 -- 1-6-0

BRACING
TOP CHORD Structural wood sheathing directly applied.
BOT CHORD Rigid ceiling directly applied.
WEBS 1 Row at midpt 20-21

REACTIONS (size) 2=0-3-8, 12=0-3-8
Max Horiz 2=-172 (LC 14)
Max Grav 2=1582 (LC 2), 12=1582 (LC 2)

FORCES (lb) - Maximum Compression/Maximum Tension
TOP CHORD 1-2=0/41, 2-4=-2287/152, 4-6=-2130/0, 6-7=-2176/0, 7-8=-2195/0, 8-10=-2130/0, 10-12=-2287/151, 12-13=0/41
BOT CHORD 2-19=-39/1851, 17-19=0/1719, 15-17=0/1288, 14-15=0/1724, 12-14=-8/1852
WEBS 4-19=-211/113, 6-19=-150/242, 6-18=-491/219, 8-15=-489/227, 8-14=-170/237, 10-14=-211/114, 18-20=0/951, 7-20=0/1004, 7-21=0/1016, 15-21=0/964, 20-22=-44/0, 21-22=-44/0, 17-22=0/169

NOTES
1) Unbalanced roof live loads have been considered for this design.
2) Wind: ASCE 7-16; Vult=120mph (3-second gust) Vasd=95mph; TCDL=6.0psf; BCDL=6.0psf; h=25ft; Cat. II; Exp B; Enclosed; MWFRS (envelope) and C-C Exterior(2E) -1-0-0 to 2-5-14, Interior (1) 2-5-14 to 17-5-8, Exterior(2R) 17-5-8 to 20-11-6, Interior (1) 20-11-6 to 35-11-0 zone; cantilever left and right exposed ; end vertical left and right exposed;C-C for members and forces & MWFRS for reactions shown; Lumber DOL=1.60 plate grip DOL=1.60
3) TCLL: ASCE 7-16; Pr=20.0 psf (roof LL: Lum DOL=1.15 Plate DOL=1.15); Pg=20.0 psf; Pf=15.4 psf (Lum DOL = 1.15 Plate DOL = 1.15); Is=1.0; Rough Cat B; Partially Exp.; Ce=1.0; Cs=1.00; Ct=1.10
4) Unbalanced snow loads have been considered for this design.
5) This truss has been designed for greater of min roof live load of 12.0 psf or 2.00 times flat roof load of 15.4 psf on overhangs non-concurrent with other live loads.
6) 250.0lb AC unit load placed on the bottom chord, 17-5-8 from left end, supported at two points, 5-0-0 apart.
7) All plates are MT20 plates unless otherwise indicated.
8) Plates checked for a plus or minus 5 degree rotation about its center.
9) This truss has been designed for a 10.0 psf bottom chord live load nonconcurrent with any other live loads.
10) * This truss has been designed for a live load of 20.0psf on the bottom chord in all areas where a rectangle 3-06-00 tall by 2-00-00 wide will fit between the bottom chord and any other members.
11) This truss has been designed for a moving concentrated load of 250.0lb live and 3.0lb dead located at all mid panels and at all panel points along the Top Chord and Bottom Chord, nonconcurrent with any other live loads.
12) This truss design requires that a minimum of 7/16" structural wood sheathing be applied directly to the top chord and 1/2" gypsum sheetrock be applied directly to the bottom chord.
13) Attic room checked for L/360 deflection.

LOAD CASE(S) Standard

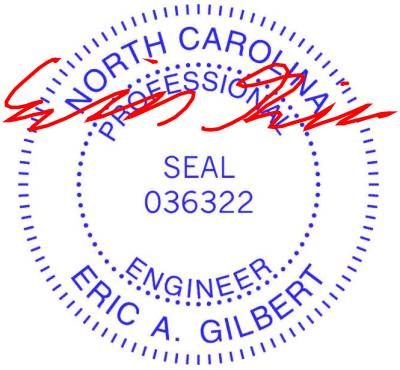

May 28,2025

WARNING - Verify design parameters and READ NOTES ON THIS AND INCLUDED MITEK REFERENCE PAGE MII-7473 rev. 1/2/2023 BEFORE USE.
Design valid for use only with MiTek® connectors. This design is based only upon parameters shown, and is for an individual building component, not a truss system. Before use, the building designer must verify the applicability of design parameters and properly incorporate this design into the overall building design. Bracing indicated is to prevent buckling of individual truss web and/or chord members only. Additional temporary and permanent bracing is always required for stability and to prevent collapse with possible personal injury and property damage. For general guidance regarding the fabrication, storage, delivery, erection and bracing of trusses and truss systems, see **ANSI/TPI1 Quality Criteria and DSB-22** available from Truss Plate Institute (www.tpinst.org) and **BCSI Building Component Safety Information** available from the Structural Building Component Association (www.sbcacomponents.com)

ENGINEERING BY TRENCO A MiTek Affiliate
818 Soundside Road
Edenton, NC 27932

Job	Truss	Truss Type	Qty	Ply	Elmhurst Rev 3-Elev 5-Roof
	A1	Common	5	1	I73750774 Job Reference (optional)

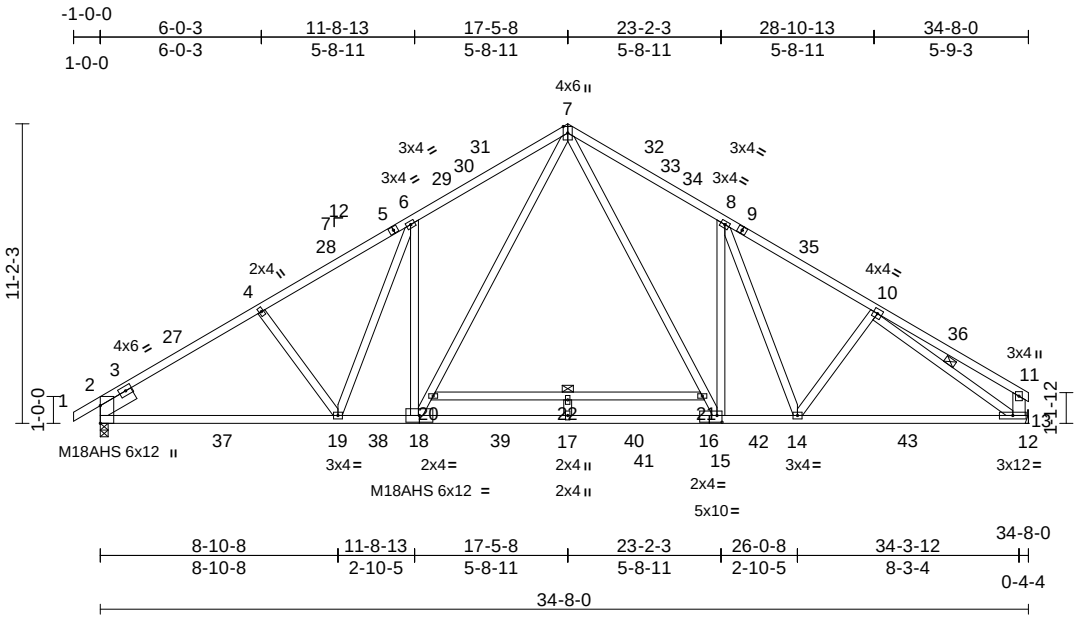

Scale = 1:86.1

Plate Offsets (X, Y): [15:0-2-4,0-3-0]

Loading	(psf)	Spacing	2-0-0	CSI		DEFL	in	(loc)	l/defl	L/d	PLATES	GRIP
TCLL (roof)	20.0	Plate Grip DOL	1.15	TC	0.75	Vert(LL)	-0.35	17	>999	360	MT20	244/190
Snow (Pf/Pg)	15.4/20.0	Lumber DOL	1.15	BC	0.63	Vert(CT)	-0.85	17	>483	240	M18AHS	186/179
TCDL	10.0	Rep Stress Incr	YES	WB	0.81	Horz(CT)	0.07	13	n/a	n/a		
BCLL	0.0*	Code	IRC2021/TPI2014	Matrix-AS		Wind(LL)	0.05	18-19	>999	240		
BCDL	10.0										Weight: 239 lb	FT = 20%

LUMBER

TOP CHORD 2x4 SP No.2 *Except* 5-1:2x4 SP SS
BOT CHORD 2x4 SP SS
WEBS 2x4 SP No.3 *Except* 13-11:2x6 SP No.2, 20-21:2x4 SP SS
SLIDER Left 2x6 SP No.2 -- 1-6-0

BRACING

TOP CHORD Structural wood sheathing directly applied, except end verticals.
BOT CHORD Rigid ceiling directly applied.
WEBS 1 Row at midpt 10-13, 20-21

REACTIONS (size) 2=0-3-8, 13= Mechanical
Max Horiz 2=185 (LC 15)
Max Grav 2=1556 (LC 2), 13=1506 (LC 2)

FORCES (lb) - Maximum Compression/Maximum Tension

TOP CHORD 1-2=0/41, 2-4=-2242/143, 4-6=-2085/0, 6-7=-2127/0, 7-8=-2091/0, 8-10=-2058/0, 10-11=-572/1, 11-13=-431/21
BOT CHORD 2-19=-57/1832, 17-19=0/1694, 15-17=0/1252, 14-15=0/1652, 13-14=0/1721, 12-13=0/0
WEBS 10-13=-1752/0, 4-19=-214/113, 6-19=-147/245, 6-18=-493/219, 8-15=-442/232, 8-14=-177/198, 10-14=-149/120, 18-20=0/951, 7-20=0/1007, 7-21=0/921, 15-21=0/866, 20-22=-46/0, 21-22=-46/0, 17-22=0/170

NOTES

1) Unbalanced roof live loads have been considered for this design.
2) Wind: ASCE 7-16; Vult=120mph (3-second gust) Vasd=95mph; TCDL=6.0psf; BCDL=6.0psf; h=25ft; Cat. II; Exp B; Enclosed; MWFRS (envelope) and C-C Exterior(2E) -1-0-0 to 2-5-10, Interior (1) 2-5-10 to 17-5-8, Exterior(2R) 17-5-8 to 20-11-2, Interior (1) 20-11-2 to 34-3-12 zone; cantilever left and right exposed ; end vertical left and right exposed;C-C for members and forces & MWFRS for reactions shown; Lumber DOL=1.60 plate grip DOL=1.60
3) TCLL: ASCE 7-16; Pr=20.0 psf (roof LL: Lum DOL=1.15 Plate DOL=1.15); Pg=20.0 psf; Pf=15.4 psf (Lum DOL = 1.15 Plate DOL = 1.15); Is=1.0; Rough Cat B; Partially Exp.; Ce=1.0; Cs=1.00; Ct=1.10
4) Unbalanced snow loads have been considered for this design.
5) This truss has been designed for greater of min roof live load of 12.0 psf or 2.00 times flat roof load of 15.4 psf on overhangs non-concurrent with other live loads.
6) 250.0lb AC unit load placed on the bottom chord, 17-5-8 from left end, supported at two points, 5-0-0 apart.
7) All plates are MT20 plates unless otherwise indicated.
8) Plates checked for a plus or minus 5 degree rotation about its center.
9) This truss has been designed for a 10.0 psf bottom chord live load nonconcurrent with any other live loads.
10) * This truss has been designed for a live load of 20.0psf on the bottom chord in all areas where a rectangle 3-06-00 tall by 2-00-00 wide will fit between the bottom chord and any other members.
11) Refer to girder(s) for truss to truss connections.
12) This truss has been designed for a moving concentrated load of 250.0lb live and 3.0lb dead located at all mid panels and at all panel points along the Top Chord and Bottom Chord, nonconcurrent with any other live loads.
13) This truss design requires that a minimum of 7/16" structural wood sheathing be applied directly to the top chord and 1/2" gypsum sheetrock be applied directly to the bottom chord.
14) Attic room checked for L/360 deflection.

LOAD CASE(S) Standard

May 28,2025

WARNING - Verify design parameters and READ NOTES ON THIS AND INCLUDED MITEK REFERENCE PAGE MII-7473 rev. 1/2/2023 BEFORE USE.
Design valid for use only with MiTek® connectors. This design is based only upon parameters shown, and is for an individual building component, not a truss system. Before use, the building designer must verify the applicability of design parameters and properly incorporate this design into the overall building design. Bracing indicated is to prevent buckling of individual truss web and/or chord members only. Additional temporary and permanent bracing is always required for stability and to prevent collapse with possible personal injury and property damage. For general guidance regarding the fabrication, storage, delivery, erection and bracing of trusses and truss systems, see **ANSI/TPI1 Quality Criteria and DSB-22** available from Truss Plate Institute (www.tpinst.org) and **BCSI Building Component Safety Information** available from the Structural Building Component Association (www.sbcacomponents.com)

ENGINEERING BY TRENCO A MiTek Affiliate
818 Soundside Road
Edenton, NC 27932

Job	Truss	Truss Type	Qty	Ply	Elmhurst Rev 3-Elev 5-Roof
	A1A	Common	1	1	I73750775 Job Reference (optional)

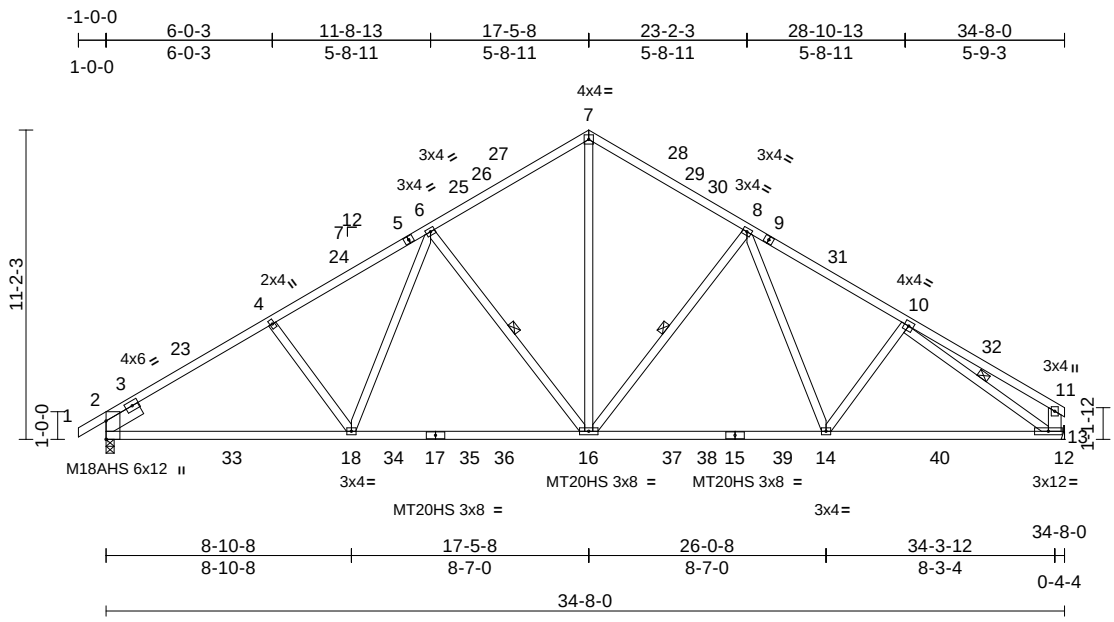

Scale = 1:83.3

Loading	(psf)	Spacing	2-0-0	CSI		DEFL	in	(loc)	l/defl	L/d	PLATES	GRIP
TCLL (roof)	20.0	Plate Grip DOL	1.15	TC	0.69	Vert(LL)	-0.36	16-18	>999	360	MT20	244/190
Snow (Pf/Pg)	15.4/20.0	Lumber DOL	1.15	BC	0.65	Vert(CT)	-0.53	16-18	>778	240	M18AHS	186/179
TCDL	10.0	Rep Stress Incr	YES	WB	0.50	Horz(CT)	0.07	13	n/a	n/a	MT20HS	187/143
BCLL	0.0*	Code	IRC2021/TPI2014	Matrix-AS		Wind(LL)	0.05	16-18	>999	240		
BCDL	10.0										Weight: 209 lb	FT = 20%

LUMBER

TOP CHORD 2x4 SP No.2 *Except* 1-5:2x4 SP SS
BOT CHORD 2x4 SP SS
WEBS 2x4 SP No.3 *Except* 13-11:2x6 SP No.2
SLIDER Left 2x6 SP No.2 -- 1-6-0

BRACING

TOP CHORD Structural wood sheathing directly applied, except end verticals.
BOT CHORD Rigid ceiling directly applied.
WEBS 1 Row at midpt 8-16, 6-16, 10-13

REACTIONS (size) 2=0-3-8, 13= Mechanical
Max Horiz 2=185 (LC 15)
Max Grav 2=1627 (LC 35), 13=1583 (LC 36)

FORCES (lb) - Maximum Compression/Maximum Tension
TOP CHORD 1-2=0/41, 2-4=-2502/215, 4-6=-2347/106, 6-7=-1792/150, 7-8=-1789/148, 8-10=-2309/104, 10-11=-550/42, 11-13=-405/42
BOT CHORD 2-18=-102/2048, 16-18=0/1798, 14-16=0/1752, 13-14=-35/1919, 12-13=0/0
WEBS 7-16=-51/1395, 8-16=-600/101, 8-14=0/401, 10-14=-167/98, 6-16=-673/101, 6-18=0/441, 4-18=-221/99, 10-13=-1962/66

NOTES

1) Unbalanced roof live loads have been considered for this design.
2) Wind: ASC E 7-16; Vult=120mph (3-second gust) Vasd=95mph; TCDL=6.0psf; BCDL=6.0psf; h=25ft; Cat. II; Exp B; Enclosed; MWFRS (envelope) and C-C Exterior(2E) -1-0-0 to 2-5-10, Interior (1) 2-5-10 to 17-5-8, Exterior(2R) 17-5-8 to 20-11-2, Interior (1) 20-11-2 to 34-3-12 zone; cantilever left and right exposed ; end vertical left and right exposed;C-C for members and forces & MWFRS for reactions shown; Lumber DOL=1.60 plate grip DOL=1.60
3) TCLL: ASCE 7-16; Pr=20.0 psf (roof LL: Lum DOL=1.15 Plate DOL=1.15); Pg=20.0 psf; Pf=15.4 psf (Lum DOL = 1.15 Plate DOL = 1.15); Is=1.0; Rough Cat B; Partially Exp.; Ce=1.0; Cs=1.00; Ct=1.10
4) Unbalanced snow loads have been considered for this design.
5) This truss has been designed for greater of min roof live load of 12.0 psf or 2.00 times flat roof load of 15.4 psf on overhangs non-concurrent with other live loads.
6) All plates are MT20 plates unless otherwise indicated.
7) Plates checked for a plus or minus 5 degree rotation about its center.
8) This truss has been designed for a 10.0 psf bottom chord live load nonconcurrent with any other live loads.
9) * This truss has been designed for a live load of 20.0psf on the bottom chord in all areas where a rectangle 3-06-00 tall by 2-00-00 wide will fit between the bottom chord and any other members, with BCDL = 10.0psf.
10) Refer to girder(s) for truss to truss connections.
11) This truss has been designed for a moving concentrated load of 250.0lb live and 3.0lb dead located at all mid panels and at all panel points along the Top Chord and Bottom Chord, nonconcurrent with any other live loads.
12) This truss design requires that a minimum of 7/16" structural wood sheathing be applied directly to the top chord and 1/2" gypsum sheetrock be applied directly to the bottom chord.
13) Attic room checked for L/360 deflection.

LOAD CASE(S) Standard

May 28,2025

WARNING - Verify design parameters and READ NOTES ON THIS AND INCLUDED MITEK REFERENCE PAGE MII-7473 rev. 1/2/2023 BEFORE USE.
Design valid for use only with MiTek® connectors. This design is based only upon parameters shown, and is for an individual building component, not a truss system. Before use, the building designer must verify the applicability of design parameters and properly incorporate this design into the overall building design. Bracing indicated is to prevent buckling of individual truss web and/or chord members only. Additional temporary and permanent bracing is always required for stability and to prevent collapse with possible personal injury and property damage. For general guidance regarding the fabrication, storage, delivery, erection and bracing of trusses and truss systems, see **ANSI/TPI1 Quality Criteria and DSB-22** available from Truss Plate Institute (www.tpinst.org) and **BCSI Building Component Safety Information** available from the Structural Building Component Association (www.sbcacomponents.com)

ENGINEERING BY TRENCO A MiTek Affiliate
818 Soundside Road
Edenton, NC 27932

Job	Truss	Truss Type	Qty	Ply	Elmhurst Rev 3-Elev 5-Roof
	H1	Hip	1	1	I73750776 Job Reference (optional)

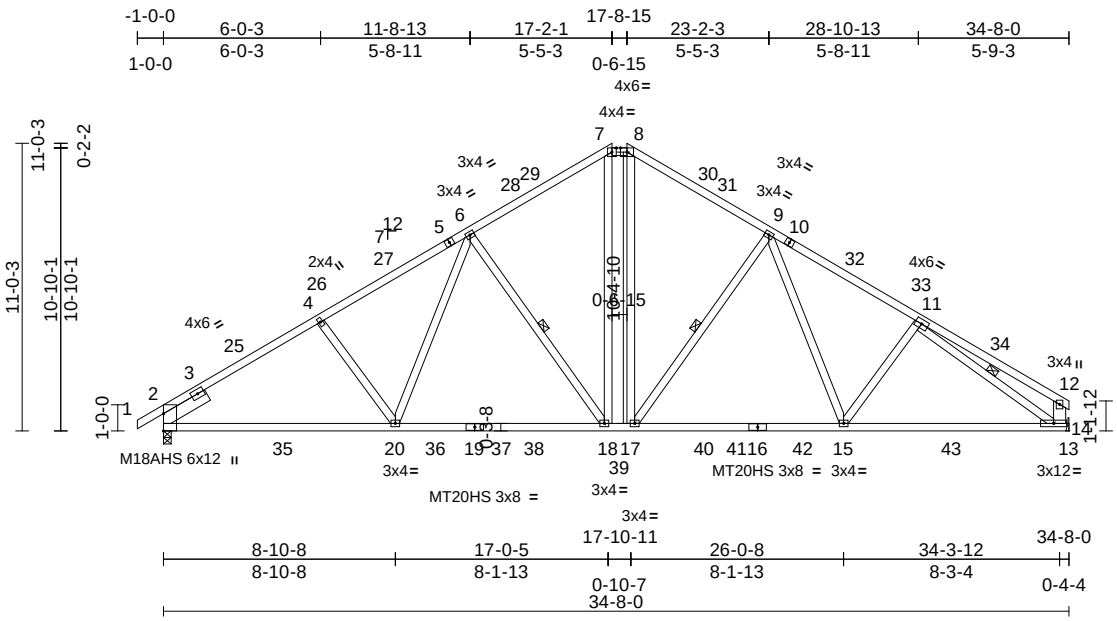

Scale = 1:88.2

Loading	(psf)	Spacing	2-0-0	CSI		DEFL	in	(loc)	l/defl	L/d	PLATES	GRIP
TCLL (roof)	20.0	Plate Grip DOL	1.15	TC	0.76	Vert(LL)	-0.30	18-20	>999	360	MT20	244/190
Snow (Pf/Pg)	20.4/20.0	Lumber DOL	1.15	BC	0.65	Vert(CT)	-0.45	18-20	>913	240	M18AHS	186/179
TCDL	10.0	Rep Stress Incr	YES	WB	0.59	Horz(CT)	0.08	14	n/a	n/a	MT20HS	187/143
BCLL	0.0*	Code	IRC2021/TPI2014	Matrix-AS		Wind(LL)	0.06	18-20	>999	240		
BCDL	10.0										Weight: 224 lb	FT = 20%

LUMBER

TOP CHORD 2x4 SP No.2 *Except* 1-5:2x4 SP SS
BOT CHORD 2x4 SP SS
WEBS 2x4 SP No.3 *Except* 14-12:2x6 SP No.2
SLIDER Left 2x6 SP No.2 -- 2-0-0

BRACING

TOP CHORD Structural wood sheathing directly applied, except end verticals, and 2-0-0 oc purlins (4-2-10 max.): 7-8.
BOT CHORD Rigid ceiling directly applied.
WEBS 1 Row at midpt 6-18, 11-14, 9-17

REACTIONS (size) 2=0-3-8, 14= Mechanical
Max Horiz 2=181 (LC 15)
Max Grav 2=1810 (LC 57), 14=1783 (LC 59)

FORCES (lb) - Maximum Compression/Maximum Tension
TOP CHORD 1-2=0/41, 2-4=-2846/302, 4-6=-2726/106, 6-7=-2136/150, 7-8=-1764/153, 8-9=-2127/151, 9-11=-2679/106, 11-12=-546/40, 12-14=-405/42
BOT CHORD 2-20=-105/2345, 18-20=0/2112, 17-18=0/1659, 15-17=0/2059, 14-15=-36/2207, 13-14=0/0
WEBS 4-20=-218/99, 6-20=0/442, 6-18=-767/98, 7-18=-31/842, 8-17=-28/725, 11-14=-2328/68, 9-17=-680/99, 9-15=0/403, 11-15=-167/99

NOTES

1) Unbalanced roof live loads have been considered for this design.
2) Wind: ASCE 7-16; Vult=120mph (3-second gust) Vasd=95mph; TCDL=6.0psf; BCDL=6.0psf; h=25ft; Cat. II; Exp B; Enclosed; MWFRS (envelope) and C-C Exterior(2E) -1-0-0 to 2-5-10, Interior (1) 2-5-10 to 17-2-1, Exterior(2E) 17-2-1 to 17-8-15, Exterior(2R) 17-8-15 to 21-2-9, Interior (1) 21-2-9 to 34-3-12 zone; cantilever left and right exposed ; end vertical left and right exposed;C-C for members and forces & MWFRS for reactions shown; Lumber DOL=1.60 plate grip DOL=1.60
3) TCLL: ASCE 7-16; Pr=20.0 psf (roof LL: Lum DOL=1.15 Plate DOL=1.15); Pg=20.0 psf; Pf=20.4 psf (Lum DOL = 1.15 Plate DOL = 1.15); Is=1.0; Rough Cat B; Partially Exp.; Ce=1.0; Cs=1.00; Ct=1.10, Lu=50-0-0
4) Unbalanced snow loads have been considered for this design.
5) This truss has been designed for greater of min roof live load of 12.0 psf or 2.00 times flat roof load of 15.4 psf on overhangs non-concurrent with other live loads.
6) Provide adequate drainage to prevent water ponding.
7) All plates are MT20 plates unless otherwise indicated.
8) Plates checked for a plus or minus 5 degree rotation about its center.
9) This truss has been designed for a 10.0 psf bottom chord live load nonconcurrent with any other live loads.
10) * This truss has been designed for a live load of 20.0psf on the bottom chord in all areas where a rectangle 3-06-00 tall by 2-00-00 wide will fit between the bottom chord and any other members, with BCDL = 10.0psf.
11) Refer to girder(s) for truss to truss connections.
12) This truss has been designed for a moving concentrated load of 250.0lb live and 3.0lb dead located at all mid panels and at all panel points along the Top Chord and Bottom Chord, nonconcurrent with any other live loads.
13) This truss design requires that a minimum of 7/16" structural wood sheathing be applied directly to the top chord and 1/2" gypsum sheetrock be applied directly to the bottom chord.
14) Graphical purlin representation does not depict the size or the orientation of the purlin along the top and/or bottom chord.

LOAD CASE(S) Standard

May 28,2025

WARNING - Verify design parameters and READ NOTES ON THIS AND INCLUDED MITEK REFERENCE PAGE MII-7473 rev. 1/2/2023 BEFORE USE.
Design valid for use only with MiTek® connectors. This design is based only upon parameters shown, and is for an individual building component, not a truss system. Before use, the building designer must verify the applicability of design parameters and properly incorporate this design into the overall building design. Bracing indicated is to prevent buckling of individual truss web and/or chord members only. Additional temporary and permanent bracing is always required for stability and to prevent collapse with possible personal injury and property damage. For general guidance regarding the fabrication, storage, delivery, erection and bracing of trusses and truss systems, see **ANSI/TPI1 Quality Criteria and DSB-22** available from Truss Plate Institute (www.tpinst.org) and **BCSI Building Component Safety Information** available from the Structural Building Component Association (www.sbcacomponents.com)

ENGINEERING BY TRENCO A MiTek Affiliate
818 Soundside Road
Edenton, NC 27932

Job	Truss	Truss Type	Qty	Ply	Elmhurst Rev 3-Elev 5-Roof
	H2	Hip	1	1	I73750777 Job Reference (optional)

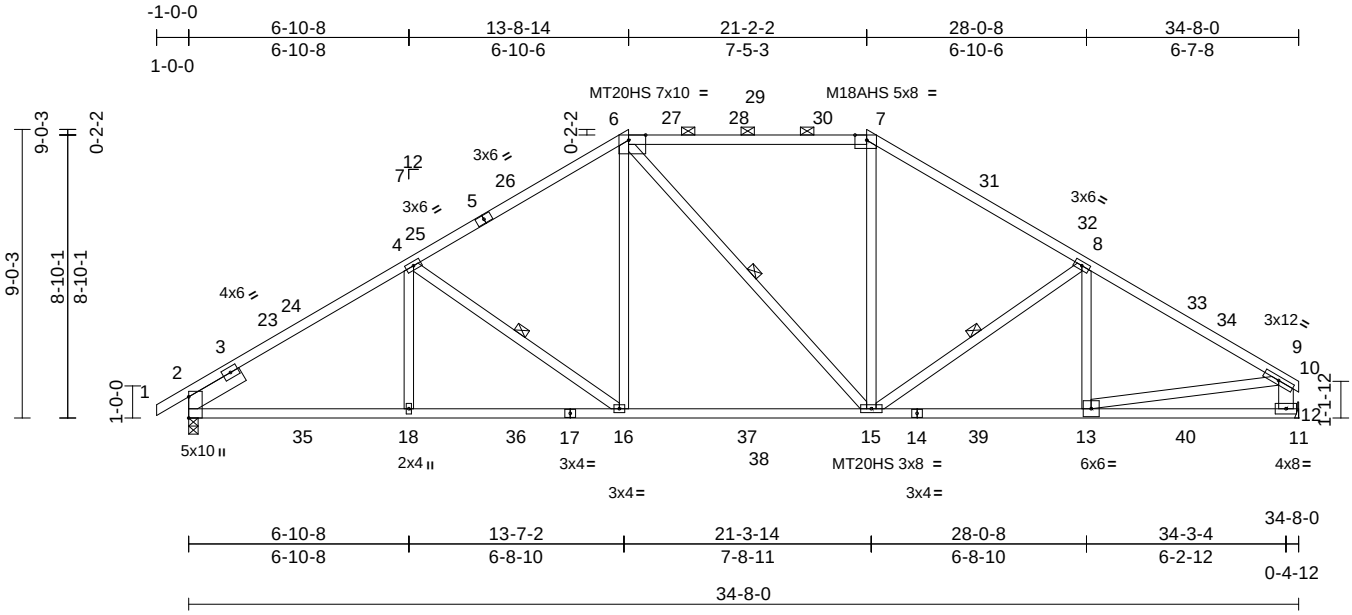

Scale = 1:72

Plate Offsets (X, Y): [6:0-6-6,Edge], [7:0-4-6,Edge]

Loading	(psf)	Spacing	2-0-0	CSI		DEFL	in	(loc)	l/defl	L/d	PLATES	GRIP
TCLL (roof)	20.0	Plate Grip DOL	1.15	TC	0.96	Vert(LL)	-0.24	15-16	>999	360	MT20	244/190
Snow (Pf/Pg)	20.4/20.0	Lumber DOL	1.15	BC	0.63	Vert(CT)	-0.36	15-16	>999	240	MT20HS	187/143
TCDL	10.0	Rep Stress Incr	YES	WB	0.65	Horz(CT)	0.07	12	n/a	n/a	M18AHS	186/179
BCLL	0.0*	Code	IRC2021/TPI2014	Matrix-AS		Wind(LL)	0.04	16-18	>999	240		
BCDL	10.0										Weight: 205 lb	FT = 20%

LUMBER

TOP CHORD 2x4 SP No.2 *Except* 6-7,1-5:2x4 SP SS
BOT CHORD 2x4 SP SS
WEBS 2x4 SP No.3 *Except* 12-9:2x6 SP No.2
SLIDER Left 2x6 SP No.2 -- 2-0-0

BRACING

TOP CHORD Structural wood sheathing directly applied, except end verticals, and 2-0-0 oc purlins (4-5-6 max.): 6-7.
BOT CHORD Rigid ceiling directly applied.
WEBS 1 Row at midpt 4-16, 6-15, 8-15

REACTIONS (size) 2=0-3-8, 12= Mechanical
Max Horiz 2=150 (LC 15)
Max Grav 2=1699 (LC 57), 12=1683 (LC 59)

FORCES (lb) - Maximum Compression/Maximum Tension
TOP CHORD 1-2=0/41, 2-4=-2701/199, 4-6=-2237/131, 6-7=-1804/147, 7-8=-2194/128, 8-9=-2541/82, 9-10=0/16, 9-12=-1751/75
BOT CHORD 2-18=-87/2222, 16-18=-37/2222, 15-16=0/1770, 13-15=-20/2116, 12-13=-28/387, 11-12=0/0
WEBS 4-18=0/326, 4-16=-539/79, 6-16=0/650, 6-15=-184/121, 7-15=0/603, 8-15=-471/75, 8-13=-146/218, 9-13=0/1754

NOTES

1) Unbalanced roof live loads have been considered for this design.
2) Wind: ASCE 7-16; Vult=120mph (3-second gust) Vasd=95mph; TCDL=6.0psf; BCDL=6.0psf; h=25ft; Cat. II; Exp B; Enclosed; MWFRS (envelope) and C-C Exterior(2E) -1-0-0 to 2-5-10, Interior (1) 2-5-10 to 13-8-14, Exterior(2R) 13-8-14 to 17-2-8, Interior (1) 17-2-8 to 21-2-2, Exterior(2R) 21-2-2 to 24-7-11, Interior (1) 24-7-11 to 34-8-0 zone; cantilever left and right exposed ; end vertical left and right exposed;C-C for members and forces & MWFRS for reactions shown; Lumber DOL=1.60 plate grip DOL=1.60
3) TCLL: ASCE 7-16; Pr=20.0 psf (roof LL: Lum DOL=1.15 Plate DOL=1.15); Pg=20.0 psf; Pf=20.4 psf (Lum DOL = 1.15 Plate DOL = 1.15); Is=1.0; Rough Cat B; Partially Exp.; Ce=1.0; Cs=1.00; Ct=1.10, Lu=50-0-0
4) Unbalanced snow loads have been considered for this design.
5) This truss has been designed for greater of min roof live load of 12.0 psf or 2.00 times flat roof load of 15.4 psf on overhangs non-concurrent with other live loads.
6) Provide adequate drainage to prevent water ponding.
7) All plates are MT20 plates unless otherwise indicated.
8) Plates checked for a plus or minus 5 degree rotation about its center.
9) This truss has been designed for a 10.0 psf bottom chord live load nonconcurrent with any other live loads.
10) * This truss has been designed for a live load of 20.0psf on the bottom chord in all areas where a rectangle 3-06-00 tall by 2-00-00 wide will fit between the bottom chord and any other members, with BCDL = 10.0psf.
11) Refer to girder(s) for truss to truss connections.
12) This truss has been designed for a moving concentrated load of 250.0lb live and 3.0lb dead located at all mid panels and at all panel points along the Top Chord and Bottom Chord, nonconcurrent with any other live loads.
13) This truss design requires that a minimum of 7/16" structural wood sheathing be applied directly to the top chord and 1/2" gypsum sheetrock be applied directly to the bottom chord.
14) Graphical purlin representation does not depict the size or the orientation of the purlin along the top and/or bottom chord.

LOAD CASE(S) Standard

May 28,2025

WARNING - Verify design parameters and READ NOTES ON THIS AND INCLUDED MITEK REFERENCE PAGE MII-7473 rev. 1/2/2023 BEFORE USE.
Design valid for use only with MiTek® connectors. This design is based only upon parameters shown, and is for an individual building component, not a truss system. Before use, the building designer must verify the applicability of design parameters and properly incorporate this design into the overall building design. Bracing indicated is to prevent buckling of individual truss web and/or chord members only. Additional temporary and permanent bracing is always required for stability and to prevent collapse with possible personal injury and property damage. For general guidance regarding the fabrication, storage, delivery, erection and bracing of trusses and truss systems, see **ANSI/TPI1 Quality Criteria and DSB-22** available from Truss Plate Institute (www.tpinst.org) and **BCSI Building Component Safety Information** available from the Structural Building Component Association (www.sbcacomponents.com)

ENGINEERING BY TRENCO A MiTek Affiliate
818 Soundside Road
Edenton, NC 27932

Job	Truss	Truss Type	Qty	Ply	Elmhurst Rev 3-Elev 5-Roof
	H1G	Hip Supported Gable	1	1	I73750778 Job Reference (optional)

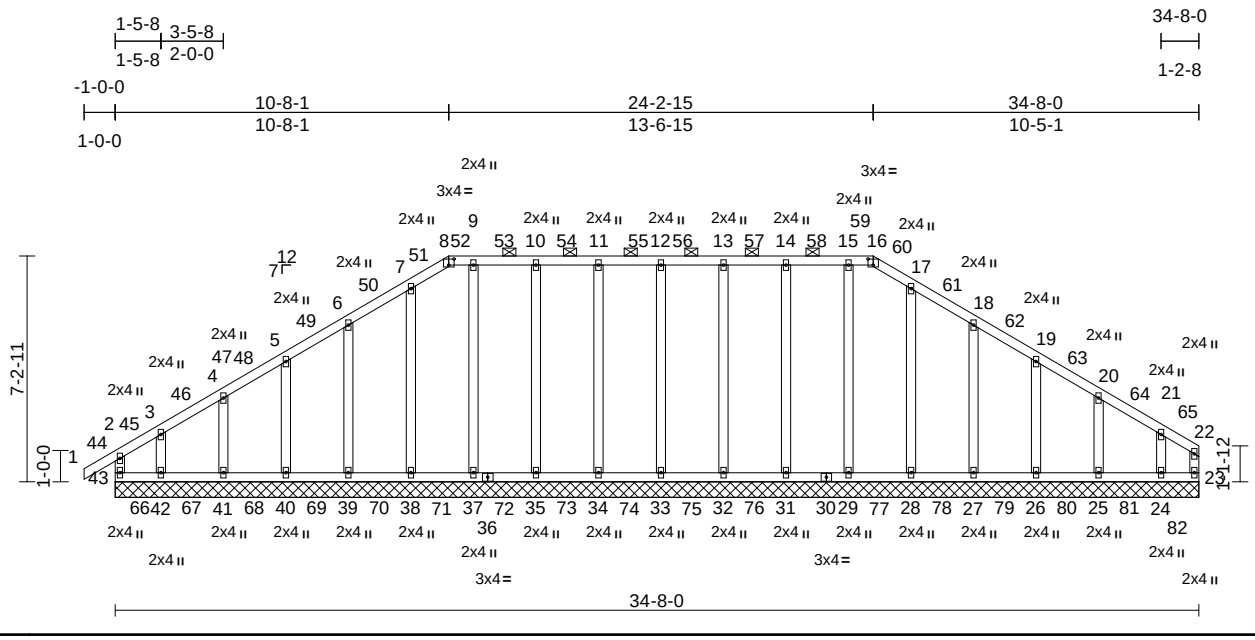

Scale = 1:73.7

Plate Offsets (X, Y): [8:0-2-0,0-2-5], [16:0-2-0,0-2-5]

Loading	(psf)	Spacing	2-0-0	CSI		DEFL	in	(loc)	l/defl	L/d	PLATES	GRIP
TCLL (roof)	20.0	Plate Grip DOL	1.15	TC	0.20	Vert(LL)	n/a	-	n/a	999	MT20	244/190
Snow (Pf/Pg)	20.4/20.0	Lumber DOL	1.15	BC	0.19	Vert(CT)	n/a	-	n/a	999		
TCDL	10.0	Rep Stress Incr	YES	WB	0.26	Horz(CT)	0.00	23	n/a	n/a		
BCLL	0.0*	Code	IRC2021/TPI2014	Matrix-AS								
BCDL	10.0										Weight: 235 lb	FT = 20%

LUMBER

TOP CHORD 2x4 SP No.2
BOT CHORD 2x4 SP No.2
WEBS 2x4 SP No.3
OTHERS 2x4 SP No.3

BRACING

TOP CHORD Structural wood sheathing directly applied, except end verticals, and 2-0-0 oc purlins (6-0-0 max.): 8-16.
BOT CHORD Rigid ceiling directly applied.

REACTIONS (size) 23=34-8-0, 24=34-8-0, 25=34-8-0, 26=34-8-0, 27=34-8-0, 28=34-8-0, 29=34-8-0, 31=34-8-0, 32=34-8-0, 33=34-8-0, 34=34-8-0, 35=34-8-0, 37=34-8-0, 38=34-8-0, 39=34-8-0, 40=34-8-0, 41=34-8-0, 42=34-8-0, 43=34-8-0
Max Horiz 43=125 (LC 13)
Max Uplift 23=-43 (LC 15), 24=-53 (LC 17), 25=-6 (LC 17), 26=-10 (LC 17), 27=-16 (LC 17), 35=-1 (LC 12), 39=-15 (LC 16), 40=-11 (LC 16), 41=-4 (LC 16), 42=-62 (LC 13), 43=-56 (LC 12)
Max Grav 23=267 (LC 145), 24=320 (LC 144), 25=336 (LC 143), 26=332 (LC 142), 27=333 (LC 141), 28=332 (LC 140), 29=333 (LC 139), 31=333 (LC 138), 32=333 (LC 137), 33=333 (LC 136), 34=333 (LC 135), 35=333 (LC 134), 37=333 (LC 133), 38=332 (LC 132), 39=333 (LC 131), 40=332 (LC 130), 41=337 (LC 129), 42=312 (LC 128), 43=308 (LC 127)

FORCES (lb) - Maximum Compression/Maximum Tension

TOP CHORD 2-43=-293/43, 1-2=0/47, 2-3=-100/88, 3-4=-88/79, 4-5=-86/70, 5-6=-81/91, 6-7=-101/135, 7-8=-117/151, 8-9=-88/148, 9-10=-88/148, 10-11=-88/148, 11-12=-88/148, 12-13=-88/148, 13-14=-88/148, 14-15=-88/148, 15-16=-88/148, 16-17=-117/151, 17-18=-101/135, 18-19=-81/92, 19-20=-77/71, 20-21=-76/72, 21-22=-74/65, 22-23=-257/44

BOT CHORD 42-43=-48/66, 41-42=-48/66, 40-41=-48/66, 39-40=-48/66, 38-39=-48/66, 37-38=-48/66, 35-37=-48/66, 34-35=-48/66, 33-34=-48/66, 32-33=-48/66, 31-32=-48/66, 29-31=-48/66, 28-29=-48/66, 27-28=-48/66, 26-27=-48/66, 25-26=-48/66, 24-25=-48/66, 23-24=-48/66

WEBS 12-33=-273/35, 13-32=-273/34, 14-31=-273/44, 15-29=-271/4, 17-28=-275/19, 18-27=-279/64, 19-26=-282/53, 20-25=-286/55, 21-24=-277/70, 11-34=-273/34, 10-35=-273/44, 9-37=-271/11, 7-38=-275/19, 6-39=-279/64, 5-40=-282/54, 4-41=-287/57, 3-42=-271/70

NOTES

1) Unbalanced roof live loads have been considered for this design.
2) Wind: ASCE 7-16; Vult=120mph (3-second gust) Vasd=95mph; TCDL=6.0psf; BCDL=6.0psf; h=25ft; Cat. II; Exp B; Enclosed; MWFRS (envelope) and C-C Corner (3E) -1-0-0 to 2-5-10, Exterior(2N) 2-5-10 to 10-8-1, Corner(3R) 10-8-1 to 14-1-10, Exterior(2N) 14-1-10 to 24-2-15, Corner(3R) 24-2-15 to 27-5-8, Exterior(2N) 27-5-8 to 34-6-4 zone; cantilever left and right exposed ; end vertical left and right exposed;C-C for members and forces & MWFRS for reactions shown; Lumber DOL=1.60 plate grip DOL=1.60
3) Truss designed for wind loads in the plane of the truss only. For studs exposed to wind (normal to the face), see Standard Industry Gable End Details as applicable, or consult qualified building designer as per ANSI/TPI 1.
4) TCLL: ASCE 7-16; Pr=20.0 psf (roof LL: Lum DOL=1.15 Plate DOL=1.15); Pg=20.0 psf; Pf=20.4 psf (Lum DOL = 1.15 Plate DOL = 1.15); Is=1.0; Rough Cat B; Partially Exp.; Ce=1.0; Cs=1.00; Ct=1.10, Lu=50-0-0
5) Unbalanced snow loads have been considered for this design.

May 28,2025

Continued on page 2

WARNING - Verify design parameters and READ NOTES ON THIS AND INCLUDED MITEK REFERENCE PAGE MII-7473 rev. 1/2/2023 BEFORE USE.
Design valid for use only with MiTek® connectors. This design is based only upon parameters shown, and is for an individual building component, not a truss system. Before use, the building designer must verify the applicability of design parameters and properly incorporate this design into the overall building design. Bracing indicated is to prevent buckling of individual truss web and/or chord members only. Additional temporary and permanent bracing is always required for stability and to prevent collapse with possible personal injury and property damage. For general guidance regarding the fabrication, storage, delivery, erection and bracing of trusses and truss systems, see **ANSI/TPI1 Quality Criteria and DSB-22** available from Truss Plate Institute (www.tpinst.org) and **BCSI Building Component Safety Information** available from the Structural Building Component Association (www.sbcacomponents.com)

ENGINEERING BY TRENCO A MiTek Affiliate
818 Soundside Road
Edenton, NC 27932

6) This truss has been designed for greater of min roof live load of 12.0 psf or 2.00 times flat roof load of 15.4 psf on overhangs non-concurrent with other live loads.
7) Provide adequate drainage to prevent water ponding.
8) Plates checked for a plus or minus 5 degree rotation about its center.
9) Gable requires continuous bottom chord bearing.
10) Truss to be fully sheathed from one face or securely braced against lateral movement (i.e. diagonal web).
11) Gable studs spaced at 2-0-0 oc.
12) This truss has been designed for a 10.0 psf bottom chord live load nonconcurrent with any other live loads.
13) * This truss has been designed for a live load of 20.0psf on the bottom chord in all areas where a rectangle 3-06-00 tall by 2-00-00 wide will fit between the bottom chord and any other members.
14) N/A
15) This truss has been designed for a moving concentrated load of 250.0lb live and 3.0lb dead located at all mid panels and at all panel points along the Top Chord and Bottom Chord, nonconcurrent with any other live loads.
16) This truss design requires that a minimum of 7/16" structural wood sheathing be applied directly to the top chord and 1/2" gypsum sheetrock be applied directly to the bottom chord.
17) Graphical purlin representation does not depict the size or the orientation of the purlin along the top and/or bottom chord.

LOAD CASE(S) Standard

May 28,2025

WARNING - Verify design parameters and READ NOTES ON THIS AND INCLUDED MITEK REFERENCE PAGE MII-7473 rev. 1/2/2023 BEFORE USE.
Design valid for use only with MiTek® connectors. This design is based only upon parameters shown, and is for an individual building component, not a truss system. Before use, the building designer must verify the applicability of design parameters and properly incorporate this design into the overall building design. Bracing indicated is to prevent buckling of individual truss web and/or chord members only. Additional temporary and permanent bracing is always required for stability and to prevent collapse with possible personal injury and property damage. For general guidance regarding the fabrication, storage, delivery, erection and bracing of trusses and truss systems, see **ANSI/TPI1 Quality Criteria and DSB-22** available from Truss Plate Institute (www.tpinst.org) and **BCSI Building Component Safety Information** available from the Structural Building Component Association (www.sbcacomponents.com)

ENGINEERING BY TRENCO A MiTek Affiliate
818 Soundside Road
Edenton, NC 27932

Job	Truss	Truss Type	Qty	Ply	Elmhurst Rev 3-Elev 5-Roof
	V1	Valley	1	1	I73750779 Job Reference (optional)

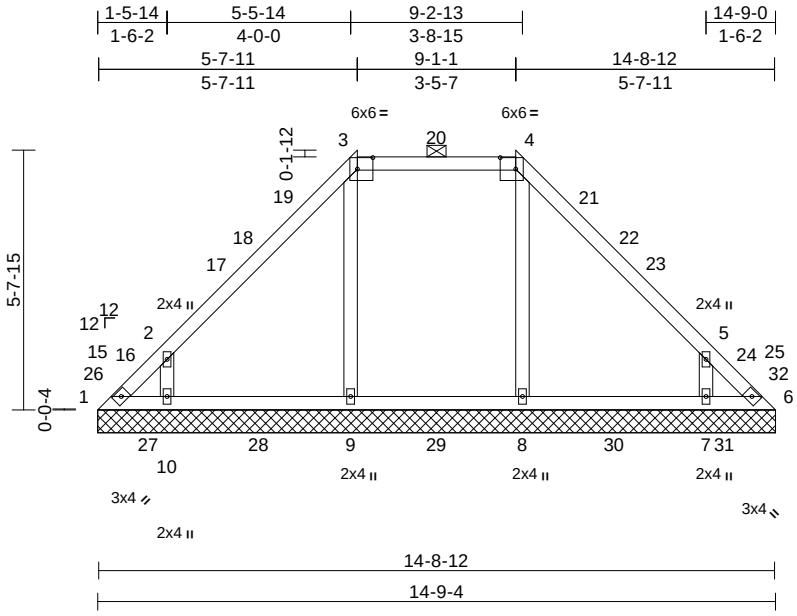

Scale = 1:50.2

Plate Offsets (X, Y): [3:0-4-1,0-3-0], [4:0-4-1,0-3-0]

Loading	(psf)	Spacing	2-0-0	CSI		DEFL	in	(loc)	l/defl	L/d	PLATES	GRIP
TCLL (roof)	20.0	Plate Grip DOL	1.15	TC	0.47	Vert(LL)	n/a	-	n/a	999	MT20	244/190
Snow (Pf/Pg)	20.4/20.0	Lumber DOL	1.15	BC	0.42	Vert(TL)	n/a	-	n/a	999		
TCDL	10.0	Rep Stress Incr	YES	WB	0.15	Horiz(TL)	0.00	6	n/a	n/a		
BCLL	0.0*	Code	IRC2021/TPI2014	Matrix-MS								
BCDL	10.0										Weight: 67 lb	FT = 20%

LUMBER
TOP CHORD 2x4 SP No.2
BOT CHORD 2x4 SP No.2
OTHERS 2x4 SP No.3

BRACING
TOP CHORD Structural wood sheathing directly applied or 6-0-0 oc purlins, except 2-0-0 oc purlins (6-0-0 max.): 3-4.
BOT CHORD Rigid ceiling directly applied or 10-0-0 oc bracing.

REACTIONS (size) 1=14-9-4, 6=14-9-4, 7=14-9-4, 8=14-9-4, 9=14-9-4, 10=14-9-4
Max Horiz 1=-87 (LC 14)
Max Uplift 1=-56 (LC 69), 6=-56 (LC 71), 7=-70 (LC 17), 10=-72 (LC 16)
Max Grav 1=265 (LC 74), 6=265 (LC 81), 7=503 (LC 58), 8=385 (LC 92), 9=385 (LC 91), 10=506 (LC 56)

FORCES (lb) - Maximum Compression/Maximum Tension
TOP CHORD 1-2=-205/134, 2-3=-259/110, 3-4=-101/119, 4-5=-259/102, 5-6=-205/110
BOT CHORD 1-10=-57/125, 9-10=-19/76, 8-9=-19/80, 7-8=-21/77, 6-7=-57/125
WEBS 3-9=-286/45, 4-8=-286/23, 2-10=-484/253, 5-7=-484/254

NOTES
1) Unbalanced roof live loads have been considered for this design.
2) Wind: ASCE 7-16; Vult=120mph (3-second gust) Vasd=95mph; TCDL=6.0psf; BCDL=6.0psf; h=25ft; Cat. II; Exp B; Enclosed; MWFRS (envelope) and C-C Exterior(2E) 0-0-0 to 3-0-0, Interior (1) 3-0-0 to 5-7-15, Exterior(2E) 5-7-15 to 9-1-5, Exterior(2R) 9-1-5 to 13-3-1, Interior (1) 13-3-1 to 14-9-4 zone; cantilever left and right exposed ; end vertical left and right exposed;C-C for members and forces & MWFRS for reactions shown; Lumber DOL=1.60 plate grip DOL=1.60
3) Truss designed for wind loads in the plane of the truss only. For studs exposed to wind (normal to the face), see Standard Industry Gable End Details as applicable, or consult qualified building designer as per ANSI/TPI 1.
4) TCLL: ASCE 7-16; Pr=20.0 psf (roof LL: Lum DOL=1.15 Plate DOL=1.15); Pg=20.0 psf; Pf=20.4 psf (Lum DOL = 1.15 Plate DOL = 1.15); Is=1.0; Rough Cat B; Partially Exp.; Ce=1.0; Cs=1.00; Ct=1.10, Lu=50-0-0
5) Unbalanced snow loads have been considered for this design.
6) Provide adequate drainage to prevent water ponding.
7) Plates checked for a plus or minus 5 degree rotation about its center.
8) Gable requires continuous bottom chord bearing.
9) Gable studs spaced at 4-0-0 oc.
10) This truss has been designed for a 10.0 psf bottom chord live load nonconcurrent with any other live loads.
11) * This truss has been designed for a live load of 20.0psf on the bottom chord in all areas where a rectangle 3-06-00 tall by 2-00-00 wide will fit between the bottom chord and any other members, with BCDL = 10.0psf.
12) Provide mechanical connection (by others) of truss to bearing plate capable of withstanding 56 lb uplift at joint 1, 56 lb uplift at joint 6, 72 lb uplift at joint 10 and 70 lb uplift at joint 7.
13) Beveled plate or shim required to provide full bearing surface with truss chord at joint(s) 1, 6.
14) This truss has been designed for a moving concentrated load of 250.0lb live and 3.0lb dead located at all mid panels and at all panel points along the Top Chord and Bottom Chord, nonconcurrent with any other live loads.
15) Graphical purlin representation does not depict the size or the orientation of the purlin along the top and/or bottom chord.

LOAD CASE(S) Standard

May 28,2025

WARNING - Verify design parameters and READ NOTES ON THIS AND INCLUDED MITEK REFERENCE PAGE MII-7473 rev. 1/2/2023 BEFORE USE.
Design valid for use only with MiTek® connectors. This design is based only upon parameters shown, and is for an individual building component, not a truss system. Before use, the building designer must verify the applicability of design parameters and properly incorporate this design into the overall building design. Bracing indicated is to prevent buckling of individual truss web and/or chord members only. Additional temporary and permanent bracing is always required for stability and to prevent collapse with possible personal injury and property damage. For general guidance regarding the fabrication, storage, delivery, erection and bracing of trusses and truss systems, see **ANSI/TPI1 Quality Criteria and DSB-22** available from Truss Plate Institute (www.tpinst.org) and **BCSI Building Component Safety Information** available from the Structural Building Component Association (www.sbcacomponents.com)

ENGINEERING BY TRENCO A MiTek Affiliate
818 Soundside Road
Edenton, NC 27932

Job	Truss	Truss Type	Qty	Ply	Elmhurst Rev 3-Elev 5-Roof
	V2	Valley	1	1	I73750780 Job Reference (optional)

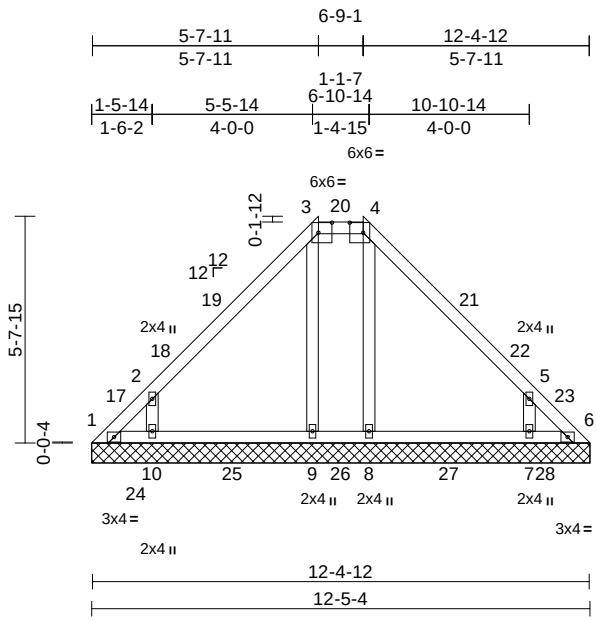

Scale = 1:57.5

Plate Offsets (X, Y): [3:0-4-1,0-3-0], [4:0-4-1,0-3-0]

Loading	(psf)	Spacing	2-0-0	CSI		DEFL	in	(loc)	l/defl	L/d	PLATES	GRIP
TCLL (roof)	20.0	Plate Grip DOL	1.15	TC	0.44	Vert(LL)	n/a	-	n/a	999	MT20	244/190
Snow (Pf/Pg)	20.4/20.0	Lumber DOL	1.15	BC	0.67	Vert(TL)	n/a	-	n/a	999		
TCDL	10.0	Rep Stress Incr	YES	WB	0.14	Horiz(TL)	0.00	14	n/a	n/a		
BCLL	0.0*	Code	IRC2021/TPI2014	Matrix-MS								
BCDL	10.0										Weight: 60 lb	FT = 20%

LUMBER
TOP CHORD 2x4 SP No.2
BOT CHORD 2x4 SP No.3
OTHERS 2x4 SP No.3

BRACING
TOP CHORD Structural wood sheathing directly applied or 6-0-0 oc purlins, except 2-0-0 oc purlins (6-0-0 max.): 3-4.
BOT CHORD Rigid ceiling directly applied or 10-0-0 oc bracing.

REACTIONS (size) 1=12-5-4, 6=12-5-4, 7=12-5-4, 8=12-5-4, 9=12-5-4, 10=12-5-4
Max Horiz 1=-83 (LC 12)
Max Uplift 1=-130 (LC 70), 6=-130 (LC 72), 7=-87 (LC 17), 9=-16 (LC 13), 10=-88 (LC 16)
Max Grav 1=237 (LC 83), 6=164 (LC 89), 7=496 (LC 45), 8=345 (LC 94), 9=345 (LC 93), 10=496 (LC 45)

FORCES (lb) - Maximum Compression/Maximum Tension
TOP CHORD 1-2=-194/159, 2-3=-229/102, 3-4=-79/117, 4-5=-229/89, 5-6=-181/139
BOT CHORD 1-10=-40/77, 9-10=-25/77, 8-9=-26/78, 7-8=-28/78, 6-7=-40/78
WEBS 3-9=-262/47, 4-8=-262/28, 2-10=-480/306, 5-7=-480/307

NOTES
1) Unbalanced roof live loads have been considered for this design.
2) Wind: ASCE 7-16; Vult=120mph (3-second gust) Vasd=95mph; TCDL=6.0psf; BCDL=6.0psf; h=25ft; Cat. II; Exp B; Enclosed; MWFRS (envelope) and C-C Exterior(2E) 0-4-15 to 3-4-15, Interior (1) 3-4-15 to 5-7-15, Exterior(2E) 5-7-15 to 6-9-5, Exterior(2R) 6-9-5 to 10-11-2, Interior (1) 10-11-2 to 12-0-5 zone; cantilever left and right exposed ; end vertical left and right exposed;C-C for members and forces & MWFRS for reactions shown; Lumber DOL=1.60 plate grip DOL=1.60
3) Truss designed for wind loads in the plane of the truss only. For studs exposed to wind (normal to the face), see Standard Industry Gable End Details as applicable, or consult qualified building designer as per ANSI/TPI 1.
4) TCLL: ASCE 7-16; Pr=20.0 psf (roof LL: Lum DOL=1.15 Plate DOL=1.15); Pg=20.0 psf; Pf=20.4 psf (Lum DOL = 1.15 Plate DOL = 1.15); Is=1.0; Rough Cat B; Partially Exp.; Ce=1.0; Cs=1.00; Ct=1.10, Lu=50-0-0
5) Unbalanced snow loads have been considered for this design.
6) Provide adequate drainage to prevent water ponding.
7) Plates checked for a plus or minus 5 degree rotation about its center.
8) Gable requires continuous bottom chord bearing.
9) Gable studs spaced at 4-0-0 oc.
10) This truss has been designed for a 10.0 psf bottom chord live load nonconcurrent with any other live loads.
11) * This truss has been designed for a live load of 20.0psf on the bottom chord in all areas where a rectangle 3-06-00 tall by 2-00-00 wide will fit between the bottom chord and any other members.
12) Provide mechanical connection (by others) of truss to bearing plate capable of withstanding 130 lb uplift at joint 1, 130 lb uplift at joint 6, 16 lb uplift at joint 9, 88 lb uplift at joint 10, 87 lb uplift at joint 7, 130 lb uplift at joint 1 and 130 lb uplift at joint 6.
13) This truss has been designed for a moving concentrated load of 250.0lb live and 3.0lb dead located at all mid panels and at all panel points along the Top Chord and Bottom Chord, nonconcurrent with any other live loads.
14) Graphical purlin representation does not depict the size or the orientation of the purlin along the top and/or bottom chord.

LOAD CASE(S) Standard

May 28,2025

WARNING - Verify design parameters and READ NOTES ON THIS AND INCLUDED MITEK REFERENCE PAGE MII-7473 rev. 1/2/2023 BEFORE USE.
Design valid for use only with MiTek® connectors. This design is based only upon parameters shown, and is for an individual building component, not a truss system. Before use, the building designer must verify the applicability of design parameters and properly incorporate this design into the overall building design. Bracing indicated is to prevent buckling of individual truss web and/or chord members only. Additional temporary and permanent bracing is always required for stability and to prevent collapse with possible personal injury and property damage. For general guidance regarding the fabrication, storage, delivery, erection and bracing of trusses and truss systems, see **ANSI/TPI1 Quality Criteria and DSB-22** available from Truss Plate Institute (www.tpinst.org) and **BCSI Building Component Safety Information** available from the Structural Building Component Association (www.sbcacomponents.com)

ENGINEERING BY TRENCO A MiTek Affiliate
818 Soundside Road
Edenton, NC 27932

Job	Truss	Truss Type	Qty	Ply	Elmhurst Rev 3-Elev 5-Roof
	V3	Valley	1	1	I73750781 Job Reference (optional)

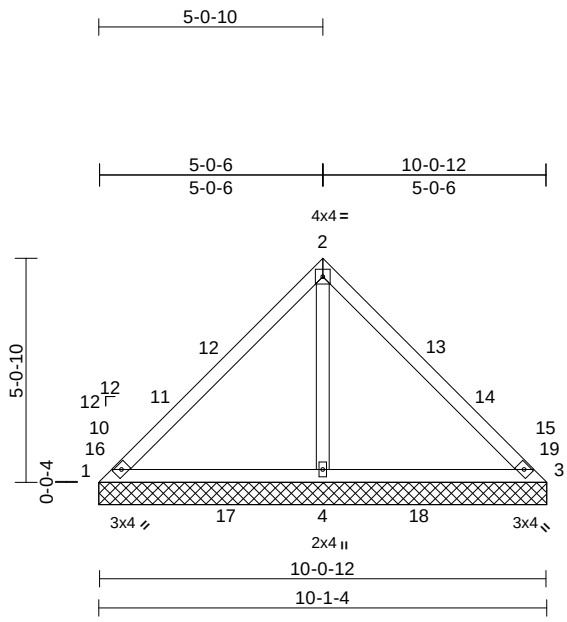

Scale = 1:52

Loading	(psf)	Spacing	2-0-0	CSI		DEFL	in	(loc)	l/defl	L/d	PLATES	GRIP
TCLL (roof)	20.0	Plate Grip DOL	1.15	TC	0.65	Vert(LL)	n/a	-	n/a	999	MT20	244/190
Snow (Pf/Pg)	15.4/20.0	Lumber DOL	1.15	BC	0.98	Vert(TL)	n/a	-	n/a	999		
TCDL	10.0	Rep Stress Incr	YES	WB	0.35	Horiz(TL)	-0.01	3	n/a	n/a		
BCLL	0.0*	Code	IRC2021/TPI2014	Matrix-MS								
BCDL	10.0										Weight: 41 lb	FT = 20%

LUMBER
TOP CHORD 2x4 SP No.2
BOT CHORD 2x4 SP No.3
OTHERS 2x4 SP No.3

BRACING
TOP CHORD Structural wood sheathing directly applied or 6-0-0 oc purlins.
BOT CHORD Rigid ceiling directly applied or 2-2-0 oc bracing.

REACTIONS (size) 1=10-1-4, 3=10-1-4, 4=10-1-4
Max Horiz 1=-78 (LC 14)
Max Uplift 1=-253 (LC 51), 3=-1 (LC 17)
Max Grav 1=252 (LC 47), 3=6 (LC 54), 4=910 (LC 51)

FORCES (lb) - Maximum Compression/Maximum Tension
TOP CHORD 1-2=-249/545, 2-3=-244/546
BOT CHORD 1-4=-366/180, 3-4=-393/175
WEBS 2-4=-810/159

NOTES
1) Unbalanced roof live loads have been considered for this design.
2) Wind: ASCE 7-16; Vult=120mph (3-second gust) Vasd=95mph; TCDL=6.0psf; BCDL=6.0psf; h=25ft; Cat. II; Exp B; Enclosed; MWFRS (envelope) and C-C Exterior(2E) 0-0-0 to 3-0-0, Interior (1) 3-0-0 to 5-0-10, Exterior(2R) 5-0-10 to 8-0-10, Interior (1) 8-0-10 to 10-1-4 zone; cantilever left and right exposed ; end vertical left and right exposed;C-C for members and forces & MWFRS for reactions shown; Lumber DOL=1.60 plate grip DOL=1.60
3) Truss designed for wind loads in the plane of the truss only. For studs exposed to wind (normal to the face), see Standard Industry Gable End Details as applicable, or consult qualified building designer as per ANSI/TPI 1.
4) TCLL: ASCE 7-16; Pr=20.0 psf (roof LL: Lum DOL=1.15 Plate DOL=1.15); Pg=20.0 psf; Pf=15.4 psf (Lum DOL = 1.15 Plate DOL = 1.15); Is=1.0; Rough Cat B; Partially Exp.; Ce=1.0; Cs=1.00; Ct=1.10
5) Unbalanced snow loads have been considered for this design.
6) Plates checked for a plus or minus 5 degree rotation about its center.
7) Gable requires continuous bottom chord bearing.
8) Gable studs spaced at 4-0-0 oc.
9) This truss has been designed for a 10.0 psf bottom chord live load nonconcurrent with any other live loads.
10) * This truss has been designed for a live load of 20.0psf on the bottom chord in all areas where a rectangle 3-06-00 tall by 2-00-00 wide will fit between the bottom chord and any other members.
11) Provide mechanical connection (by others) of truss to bearing plate capable of withstanding 253 lb uplift at joint 1, 1 lb uplift at joint 3 and 1 lb uplift at joint 3.
12) Beveled plate or shim required to provide full bearing surface with truss chord at joint(s) 1, 3, 9.
13) This truss has been designed for a moving concentrated load of 250.0lb live and 3.0lb dead located at all mid panels and at all panel points along the Top Chord and Bottom Chord, nonconcurrent with any other live loads.

LOAD CASE(S) Standard

May 28,2025

WARNING - Verify design parameters and READ NOTES ON THIS AND INCLUDED MITEK REFERENCE PAGE MII-7473 rev. 1/2/2023 BEFORE USE.
Design valid for use only with MiTek® connectors. This design is based only upon parameters shown, and is for an individual building component, not a truss system. Before use, the building designer must verify the applicability of design parameters and properly incorporate this design into the overall building design. Bracing indicated is to prevent buckling of individual truss web and/or chord members only. Additional temporary and permanent bracing is always required for stability and to prevent collapse with possible personal injury and property damage. For general guidance regarding the fabrication, storage, delivery, erection and bracing of trusses and truss systems, see **ANSI/TPI1 Quality Criteria and DSB-22** available from Truss Plate Institute (www.tpinst.org) and **BCSI Building Component Safety Information** available from the Structural Building Component Association (www.sbcacomponents.com)

ENGINEERING BY TRENCO A MiTek Affiliate
818 Soundside Road
Edenton, NC 27932

Job	Truss	Truss Type	Qty	Ply	Elmhurst Rev 3-Elev 5-Roof
	V4	Valley	1	1	I73750782 Job Reference (optional)

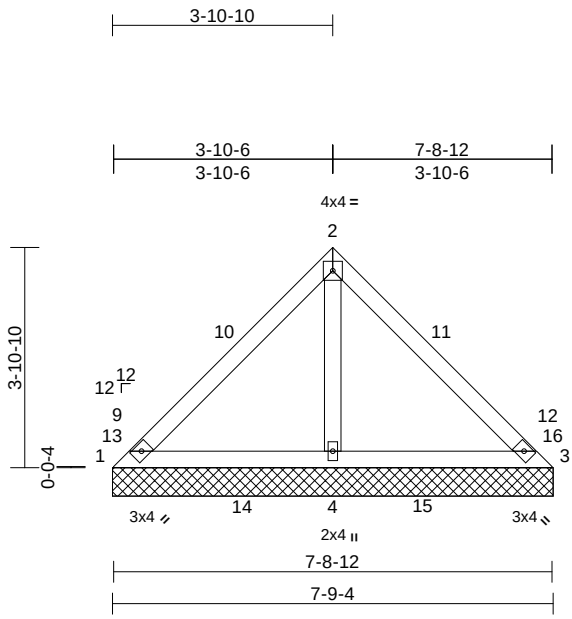

Scale = 1:40.6

Loading	(psf)	Spacing	2-0-0	CSI		DEFL	in	(loc)	l/defl	L/d	PLATES	GRIP
TCLL (roof)	20.0	Plate Grip DOL	1.15	TC	0.50	Vert(LL)	n/a	-	n/a	999	MT20	244/190
Snow (Pf/Pg)	15.4/20.0	Lumber DOL	1.15	BC	0.67	Vert(TL)	n/a	-	n/a	999		
TCDL	10.0	Rep Stress Incr	YES	WB	0.12	Horiz(TL)	0.00	4	n/a	n/a		
BCLL	0.0*	Code	IRC2021/TPI2014	Matrix-MP								
BCDL	10.0										Weight: 31 lb	FT = 20%

LUMBER
TOP CHORD 2x4 SP No.2
BOT CHORD 2x4 SP No.3
OTHERS 2x4 SP No.3

BRACING
TOP CHORD Structural wood sheathing directly applied or 7-8-12 oc purlins.
BOT CHORD Rigid ceiling directly applied or 6-0-0 oc bracing.

REACTIONS (size) 1=7-9-4, 3=7-9-4, 4=7-9-4
Max Horiz 1=-59 (LC 14)
Max Uplift 1=-59 (LC 45), 3=-59 (LC 44), 4=-6 (LC 16)
Max Grav 1=268 (LC 47), 3=268 (LC 51), 4=578 (LC 45)

FORCES (lb) - Maximum Compression/Maximum Tension
TOP CHORD 1-2=-203/274, 2-3=-203/274
BOT CHORD 1-4=-184/192, 3-4=-184/192
WEBS 2-4=-482/249

NOTES
1) Unbalanced roof live loads have been considered for this design.
2) Wind: ASCE 7-16; Vult=120mph (3-second gust) Vasd=95mph; TCDL=6.0psf; BCDL=6.0psf; h=25ft; Cat. II; Exp B; Enclosed; MWFRS (envelope) and C-C Exterior(2E) 0-0-0 to 3-0-0, Interior (1) 3-0-0 to 3-10-10, Exterior(2R) 3-10-10 to 7-0-13, Interior (1) 7-0-13 to 7-9-4 zone; cantilever left and right exposed ; end vertical left and right exposed;C-C for members and forces & MWFRS for reactions shown; Lumber DOL=1.60 plate grip DOL=1.60
3) Truss designed for wind loads in the plane of the truss only. For studs exposed to wind (normal to the face), see Standard Industry Gable End Details as applicable, or consult qualified building designer as per ANSI/TPI 1.
4) TCLL: ASCE 7-16; Pr=20.0 psf (roof LL: Lum DOL=1.15 Plate DOL=1.15); Pg=20.0 psf; Pf=15.4 psf (Lum DOL = 1.15 Plate DOL = 1.15); Is=1.0; Rough Cat B; Partially Exp.; Ce=1.0; Cs=1.00; Ct=1.10
5) Unbalanced snow loads have been considered for this design.
6) Plates checked for a plus or minus 5 degree rotation about its center.
7) Gable requires continuous bottom chord bearing.
8) Gable studs spaced at 4-0-0 oc.
9) This truss has been designed for a 10.0 psf bottom chord live load nonconcurrent with any other live loads.
10) * This truss has been designed for a live load of 20.0psf on the bottom chord in all areas where a rectangle 3-06-00 tall by 2-00-00 wide will fit between the bottom chord and any other members.
11) Provide mechanical connection (by others) of truss to bearing plate capable of withstanding 59 lb uplift at joint 1, 59 lb uplift at joint 3 and 6 lb uplift at joint 4.
12) Beveled plate or shim required to provide full bearing surface with truss chord at joint(s) 1, 3.
13) This truss has been designed for a moving concentrated load of 250.0lb live and 3.0lb dead located at all mid panels and at all panel points along the Top Chord and Bottom Chord, nonconcurrent with any other live loads.

LOAD CASE(S) Standard

May 28,2025

WARNING - Verify design parameters and READ NOTES ON THIS AND INCLUDED MITEK REFERENCE PAGE MII-7473 rev. 1/2/2023 BEFORE USE.
Design valid for use only with MiTek® connectors. This design is based only upon parameters shown, and is for an individual building component, not a truss system. Before use, the building designer must verify the applicability of design parameters and properly incorporate this design into the overall building design. Bracing indicated is to prevent buckling of individual truss web and/or chord members only. Additional temporary and permanent bracing is always required for stability and to prevent collapse with possible personal injury and property damage. For general guidance regarding the fabrication, storage, delivery, erection and bracing of trusses and truss systems, see **ANSI/TPI1 Quality Criteria and DSB-22** available from Truss Plate Institute (www.tpinst.org) and **BCSI Building Component Safety Information** available from the Structural Building Component Association (www.sbcacomponents.com)

ENGINEERING BY TRENCO A MiTek Affiliate
818 Soundside Road
Edenton, NC 27932

Job	Truss	Truss Type	Qty	Ply	Elmhurst Rev 3-Elev 5-Roof
	V5	Valley	1	1	I73750783 Job Reference (optional)

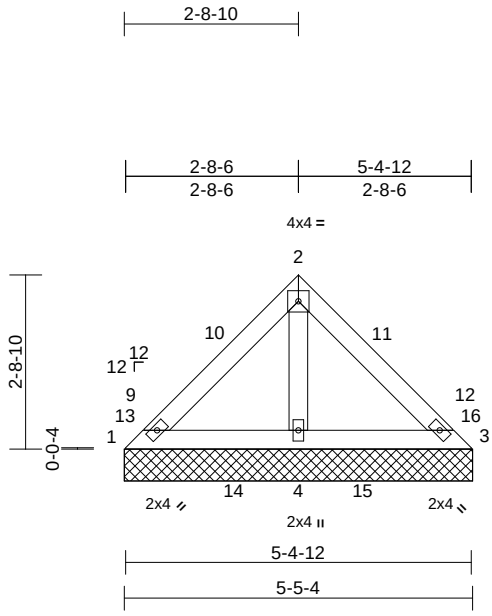

Scale = 1:36

Loading	(psf)	Spacing	2-0-0	CSI		DEFL	in	(loc)	l/defl	L/d	PLATES	GRIP
TCLL (roof)	20.0	Plate Grip DOL	1.15	TC	0.30	Vert(LL)	n/a	-	n/a	999	MT20	244/190
Snow (Pf/Pg)	15.4/20.0	Lumber DOL	1.15	BC	0.39	Vert(TL)	n/a	-	n/a	999		
TCDL	10.0	Rep Stress Incr	YES	WB	0.06	Horiz(TL)	0.00	4	n/a	n/a		
BCLL	0.0*	Code	IRC2021/TPI2014	Matrix-MP								
BCDL	10.0										Weight: 21 lb	FT = 20%

LUMBER
TOP CHORD 2x4 SP No.2
BOT CHORD 2x4 SP No.3
OTHERS 2x4 SP No.3

BRACING
TOP CHORD Structural wood sheathing directly applied or 5-4-12 oc purlins.
BOT CHORD Rigid ceiling directly applied or 6-0-0 oc bracing.

REACTIONS (size) 1=5-5-4, 3=5-5-4, 4=5-5-4
Max Horiz 1=-40 (LC 14)
Max Uplift 1=-30 (LC 50), 3=-30 (LC 48)
Max Grav 1=276 (LC 47), 3=276 (LC 51), 4=428 (LC 54)

FORCES (lb) - Maximum Compression/Maximum Tension
TOP CHORD 1-2=-211/186, 2-3=-211/186
BOT CHORD 1-4=-95/134, 3-4=-95/134
WEBS 2-4=-281/142

NOTES
1) Unbalanced roof live loads have been considered for this design.
2) Wind: ASCE 7-16; Vult=120mph (3-second gust) Vasd=95mph; TCDL=6.0psf; BCDL=6.0psf; h=25ft; Cat. II; Exp B; Enclosed; MWFRS (envelope) and C-C Exterior(2E) zone; cantilever left and right exposed ; end vertical left and right exposed;C-C for members and forces & MWFRS for reactions shown; Lumber DOL=1.60 plate grip DOL=1.60
3) Truss designed for wind loads in the plane of the truss only. For studs exposed to wind (normal to the face), see Standard Industry Gable End Details as applicable, or consult qualified building designer as per ANSI/TPI 1.
4) TCLL: ASCE 7-16; Pr=20.0 psf (roof LL: Lum DOL=1.15 Plate DOL=1.15); Pg=20.0 psf; Pf=15.4 psf (Lum DOL = 1.15 Plate DOL = 1.15); Is=1.0; Rough Cat B; Partially Exp.; Ce=1.0; Cs=1.00; Ct=1.10
5) Unbalanced snow loads have been considered for this design.
6) Plates checked for a plus or minus 5 degree rotation about its center.
7) Gable requires continuous bottom chord bearing.
8) Gable studs spaced at 4-0-0 oc.
9) This truss has been designed for a 10.0 psf bottom chord live load nonconcurrent with any other live loads.
10) * This truss has been designed for a live load of 20.0psf on the bottom chord in all areas where a rectangle 3-06-00 tall by 2-00-00 wide will fit between the bottom chord and any other members.
11) Provide mechanical connection (by others) of truss to bearing plate capable of withstanding 30 lb uplift at joint 1 and 30 lb uplift at joint 3.
12) Beveled plate or shim required to provide full bearing surface with truss chord at joint(s) 1, 3.
13) This truss has been designed for a moving concentrated load of 250.0lb live and 3.0lb dead located at all mid panels and at all panel points along the Top Chord and Bottom Chord, nonconcurrent with any other live loads.

LOAD CASE(S) Standard

May 28,2025

WARNING - Verify design parameters and READ NOTES ON THIS AND INCLUDED MITEK REFERENCE PAGE MII-7473 rev. 1/2/2023 BEFORE USE.
Design valid for use only with MiTek® connectors. This design is based only upon parameters shown, and is for an individual building component, not a truss system. Before use, the building designer must verify the applicability of design parameters and properly incorporate this design into the overall building design. Bracing indicated is to prevent buckling of individual truss web and/or chord members only. Additional temporary and permanent bracing is always required for stability and to prevent collapse with possible personal injury and property damage. For general guidance regarding the fabrication, storage, delivery, erection and bracing of trusses and truss systems, see **ANSI/TPI1 Quality Criteria and DSB-22** available from Truss Plate Institute (www.tpinst.org) and **BCSI Building Component Safety Information** available from the Structural Building Component Association (www.sbcacomponents.com)

ENGINEERING BY TRENCO A MiTek Affiliate
818 Soundside Road
Edenton, NC 27932

Job	Truss	Truss Type	Qty	Ply	Elmhurst Rev 3-Elev 5-Roof
	V6	Valley	1	1	I73750784 Job Reference (optional)

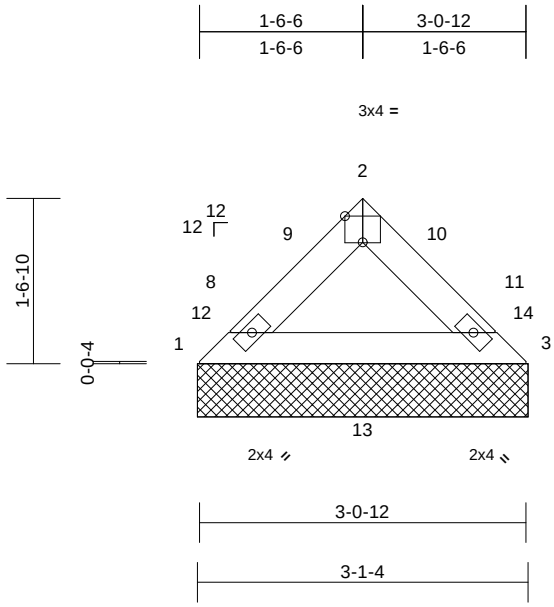

Scale = 1:21.6

Plate Offsets (X, Y): [2:0-2-0,Edge]

Loading	(psf)	Spacing	2-0-0	CSI		DEFL	in	(loc)	l/defl	L/d	PLATES	GRIP
TCLL (roof)	20.0	Plate Grip DOL	1.15	TC	0.18	Vert(LL)	n/a	-	n/a	999	MT20	244/190
Snow (Pf/Pg)	15.4/20.0	Lumber DOL	1.15	BC	0.39	Vert(TL)	n/a	-	n/a	999		
TCDL	10.0	Rep Stress Incr	YES	WB	0.00	Horiz(TL)	0.00	3	n/a	n/a		
BCLL	0.0*	Code	IRC2021/TPI2014	Matrix-MP								
BCDL	10.0										Weight: 10 lb	FT = 20%

LUMBER
TOP CHORD 2x4 SP No.2
BOT CHORD 2x4 SP No.3

BRACING
TOP CHORD Structural wood sheathing directly applied or 3-0-12 oc purlins.
BOT CHORD Rigid ceiling directly applied or 10-0-0 oc bracing.

REACTIONS (size) 1=3-1-4, 3=3-1-4
Max Horiz 1=22 (LC 13)
Max Grav 1=315 (LC 47), 3=315 (LC 51)

FORCES (lb) - Maximum Compression/Maximum Tension
TOP CHORD 1-2=-343/70, 2-3=-343/71
BOT CHORD 1-3=-49/242

NOTES
1) Unbalanced roof live loads have been considered for this design.
2) Wind: ASCE 7-16; Vult=120mph (3-second gust) Vasd=95mph; TCDL=6.0psf; BCDL=6.0psf; h=25ft; Cat. II; Exp B; Enclosed; MWFRS (envelope) and C-C Exterior(2E) zone; cantilever left and right exposed ; end vertical left and right exposed;C-C for members and forces & MWFRS for reactions shown; Lumber DOL=1.60 plate grip DOL=1.60
3) Truss designed for wind loads in the plane of the truss only. For studs exposed to wind (normal to the face), see Standard Industry Gable End Details as applicable, or consult qualified building designer as per ANSI/TPI 1.
4) TCLL: ASCE 7-16; Pr=20.0 psf (roof LL: Lum DOL=1.15 Plate DOL=1.15); Pg=20.0 psf; Pf=15.4 psf (Lum DOL = 1.15 Plate DOL = 1.15); Is=1.0; Rough Cat B; Partially Exp.; Ce=1.0; Cs=1.00; Ct=1.10
5) Unbalanced snow loads have been considered for this design.
6) Plates checked for a plus or minus 5 degree rotation about its center.
7) Gable requires continuous bottom chord bearing.
8) Gable studs spaced at 4-0-0 oc.
9) This truss has been designed for a 10.0 psf bottom chord live load nonconcurrent with any other live loads.
10) * This truss has been designed for a live load of 20.0psf on the bottom chord in all areas where a rectangle 3-06-00 tall by 2-00-00 wide will fit between the bottom chord and any other members.
11) Beveled plate or shim required to provide full bearing surface with truss chord at joint(s) 1, 3.
12) This truss has been designed for a moving concentrated load of 250.0lb live and 3.0lb dead located at all mid panels and at all panel points along the Top Chord and Bottom Chord, nonconcurrent with any other live loads.

LOAD CASE(S) Standard

May 28,2025

WARNING - Verify design parameters and READ NOTES ON THIS AND INCLUDED MITEK REFERENCE PAGE MII-7473 rev. 1/2/2023 BEFORE USE.
Design valid for use only with MiTek® connectors. This design is based only upon parameters shown, and is for an individual building component, not a truss system. Before use, the building designer must verify the applicability of design parameters and properly incorporate this design into the overall building design. Bracing indicated is to prevent buckling of individual truss web and/or chord members only. Additional temporary and permanent bracing is always required for stability and to prevent collapse with possible personal injury and property damage. For general guidance regarding the fabrication, storage, delivery, erection and bracing of trusses and truss systems, see **ANSI/TPI1 Quality Criteria and DSB-22** available from Truss Plate Institute (www.tpinst.org) and **BCSI Building Component Safety Information** available from the Structural Building Component Association (www.sbcacomponents.com)

ENGINEERING BY TRENCO A MiTek Affiliate
818 Soundside Road
Edenton, NC 27932

Job	Truss	Truss Type	Qty	Ply	Elmhurst Rev 3-Elev 5-Roof
	A2T	Roof Special	4	1	I73750785 Job Reference (optional)

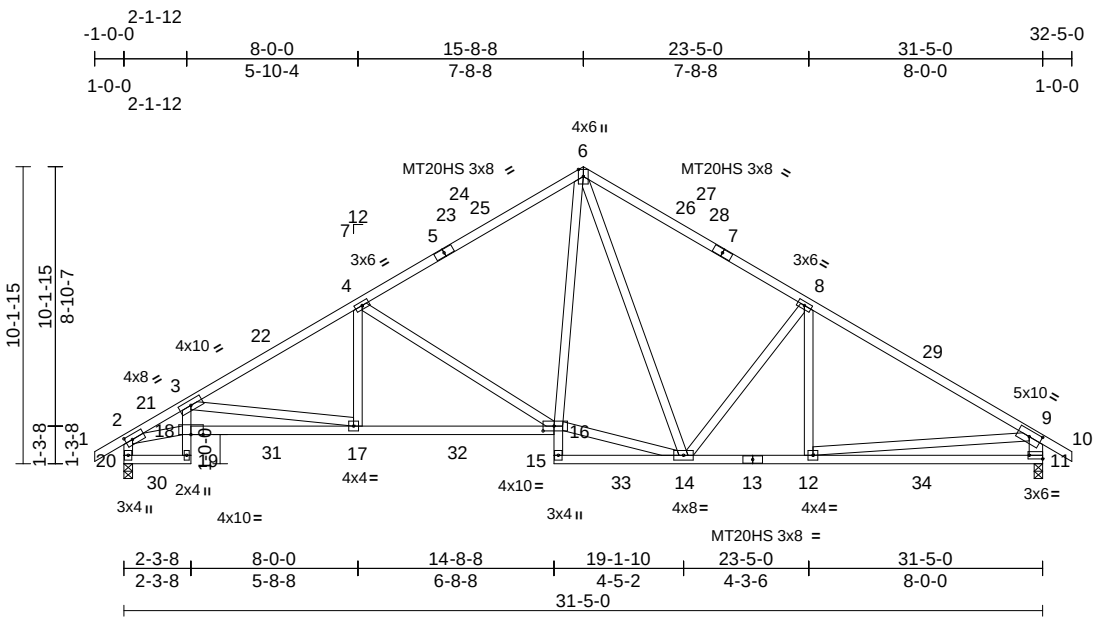

Scale = 1:78.8

Plate Offsets (X, Y): [2:0-2-14,0-2-0], [9:0-4-15,0-2-8], [11:Edge,0-1-8], [16:0-4-8,0-2-0]

Loading	(psf)	Spacing	2-0-0	CSI		DEFL	in	(loc)	l/defl	L/d	PLATES	GRIP
TCLL (roof)	20.0	Plate Grip DOL	1.15	TC	0.73	Vert(LL)	-0.19	11-12	>999	360	MT20HS	187/143
Snow (Pf/Pg)	15.4/20.0	Lumber DOL	1.15	BC	0.84	Vert(CT)	-0.31	16-17	>999	240	MT20	244/190
TCDL	10.0	Rep Stress Incr	YES	WB	0.95	Horz(CT)	0.12	11	n/a	n/a		
BCLL	0.0*	Code	IRC2021/TPI2014	Matrix-AS		Wind(LL)	0.05	17-18	>999	240		
BCDL	10.0										Weight: 202 lb	FT = 20%

LUMBER

TOP CHORD 2x4 SP SS *Except* 1-5,7-10:2x4 SP No.2
BOT CHORD 2x4 SP No.2 *Except* 19-3,16-15:2x4 SP No.3, 18-16,13-11:2x4 SP SS
WEBS 2x4 SP No.3 *Except* 11-9:2x6 SP No.2

BRACING

TOP CHORD Structural wood sheathing directly applied, except end verticals.
BOT CHORD Rigid ceiling directly applied.

REACTIONS (size) 11=0-3-8, 20=0-3-8
Max Horiz 20=175 (LC 15)
Max Grav 11=1316 (LC 2), 20=1310 (LC 2)

FORCES (lb) - Maximum Compression/Maximum Tension

TOP CHORD 1-2=0/47, 2-3=-2737/46, 3-4=-2147/64, 4-6=-1522/113, 6-8=-1525/143, 8-9=-1801/70, 9-10=0/51, 2-20=-1302/50, 9-11=-1274/99
BOT CHORD 19-20=-53/212, 18-19=-28/256, 3-18=0/471, 17-18=-31/2573, 16-17=0/1795, 15-16=0/175, 14-15=-163/101, 12-14=0/1447, 11-12=-28/563
WEBS 3-17=-788/59, 4-17=0/466, 4-16=-767/81, 8-12=0/301, 2-18=-8/2140, 9-12=0/956, 6-14=-65/323, 8-14=-485/89, 6-16=0/764, 14-16=0/1099

NOTES

1) Unbalanced roof live loads have been considered for this design.
2) Wind: ASCE 7-16; Vult=120mph (3-second gust) Vasd=95mph; TCDL=6.0psf; BCDL=6.0psf; h=25ft; Cat. II; Exp B; Enclosed; MWFRS (envelope) and C-C Exterior(2E) -1-0-0 to 2-1-12, Interior (1) 2-1-12 to 15-8-8, Exterior(2R) 15-8-8 to 18-10-3, Interior (1) 18-10-3 to 32-5-0 zone; cantilever left and right exposed ; end vertical left and right exposed;C-C for members and forces & MWFRS for reactions shown; Lumber DOL=1.60 plate grip DOL=1.60
3) TCLL: ASCE 7-16; Pr=20.0 psf (roof LL: Lum DOL=1.15 Plate DOL=1.15); Pg=20.0 psf; Pf=15.4 psf (Lum DOL = 1.15 Plate DOL = 1.15); Is=1.0; Rough Cat B; Partially Exp.; Ce=1.0; Cs=1.00; Ct=1.10
4) Unbalanced snow loads have been considered for this design.
5) This truss has been designed for greater of min roof live load of 12.0 psf or 2.00 times flat roof load of 15.4 psf on overhangs non-concurrent with other live loads.
6) All plates are MT20 plates unless otherwise indicated.
7) Plates checked for a plus or minus 5 degree rotation about its center.
8) This truss has been designed for a 10.0 psf bottom chord live load nonconcurrent with any other live loads.
9) * This truss has been designed for a live load of 20.0psf on the bottom chord in all areas where a rectangle 3-06-00 tall by 2-00-00 wide will fit between the bottom chord and any other members.
10) This truss has been designed for a moving concentrated load of 250.0lb live and 3.0lb dead located at all mid panels and at all panel points along the Top Chord and Bottom Chord, nonconcurrent with any other live loads.
11) This truss design requires that a minimum of 7/16" structural wood sheathing be applied directly to the top chord and 1/2" gypsum sheetrock be applied directly to the bottom chord.

LOAD CASE(S) Standard

May 28,2025

WARNING - Verify design parameters and READ NOTES ON THIS AND INCLUDED MITEK REFERENCE PAGE MII-7473 rev. 1/2/2023 BEFORE USE.
Design valid for use only with MiTek® connectors. This design is based only upon parameters shown, and is for an individual building component, not a truss system. Before use, the building designer must verify the applicability of design parameters and properly incorporate this design into the overall building design. Bracing indicated is to prevent buckling of individual truss web and/or chord members only. Additional temporary and permanent bracing is always required for stability and to prevent collapse with possible personal injury and property damage. For general guidance regarding the fabrication, storage, delivery, erection and bracing of trusses and truss systems, see **ANSI/TPI1 Quality Criteria and DSB-22** available from Truss Plate Institute (www.tpinst.org) and **BCSI Building Component Safety Information** available from the Structural Building Component Association (www.sbcacomponents.com)

ENGINEERING BY TRENCO A MiTek Affiliate
818 Soundside Road
Edenton, NC 27932

Job	Truss	Truss Type	Qty	Ply	Elmhurst Rev 3-Elev 5-Roof
	A1C	Common	1	1	I73750787 Job Reference (optional)

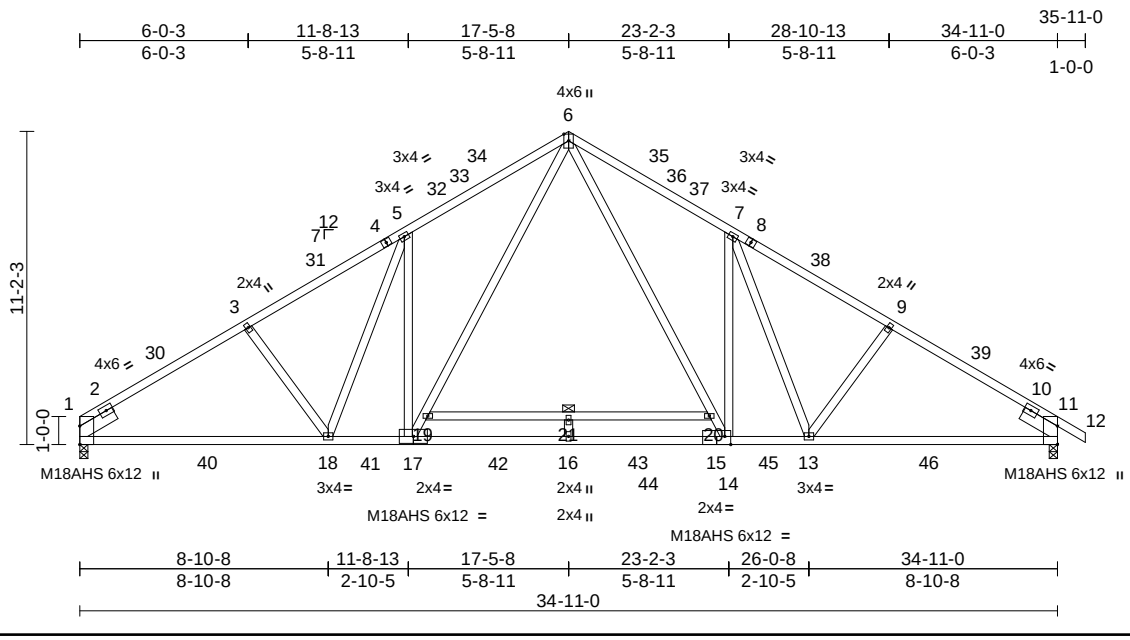

Scale = 1:82.3

Plate Offsets (X, Y): [15:0-2-9,Edge]

Loading	(psf)	Spacing	2-0-0	CSI		DEFL	in	(loc)	l/defl	L/d	PLATES	GRIP
TCLL (roof)	20.0	Plate Grip DOL	1.15	TC	0.70	Vert(LL)	-0.36	16	>999	360	MT20	244/190
Snow (Pf/Pg)	15.4/20.0	Lumber DOL	1.15	BC	0.64	Vert(CT)	-0.88	14-16	>477	240	M18AHS	186/179
TCDL	10.0	Rep Stress Incr	YES	WB	0.83	Horz(CT)	0.12	11	n/a	n/a		
BCLL	0.0*	Code	IRC2021/TPI2014	Matrix-AS		Wind(LL)	0.06	17-18	>999	240		
BCDL	10.0										Weight: 232 lb	FT = 20%

LUMBER

TOP CHORD 2x4 SP SS
BOT CHORD 2x4 SP SS
WEBS 2x4 SP No.3 *Except* 19-20:2x4 SP SS
SLIDER Left 2x6 SP No.2 -- 1-6-0, Right 2x6 SP No.2 -- 1-6-0

BRACING

TOP CHORD Structural wood sheathing directly applied.
BOT CHORD Rigid ceiling directly applied.
WEBS 1 Row at midpt 19-20

REACTIONS (size) 1=0-3-8, 11=0-3-8
Max Horiz 1=-169 (LC 14)
Max Grav 1=1521 (LC 2), 11=1583 (LC 2)

FORCES (lb) - Maximum Compression/Maximum Tension
TOP CHORD 1-3=-2291/98, 3-5=-2134/0, 5-6=-2180/0, 6-7=-2199/0, 7-9=-2131/0, 9-11=-2288/152, 11-12=0/41
BOT CHORD 1-18=-34/1857, 16-18=0/1723, 14-16=0/1289, 13-14=0/1727, 11-13=-8/1853
WEBS 9-13=-210/113, 3-18=-212/114, 5-17=-496/219, 17-19=0/955, 6-19=0/1008, 7-14=-491/227, 6-20=0/1019, 14-20=0/967, 19-21=-44/0, 20-21=-44/0, 5-18=-149/243, 7-13=-171/236, 16-21=0/169

NOTES

1) Unbalanced roof live loads have been considered for this design.
2) Wind: ASCE 7-16; Vult=120mph (3-second gust) Vasd=95mph; TCDL=6.0psf; BCDL=6.0psf; h=25ft; Cat. II; Exp B; Enclosed; MWFRS (envelope) and C-C Exterior(2E) 0-0-0 to 3-5-14, Interior (1) 3-5-14 to 17-5-8, Exterior(2R) 17-5-8 to 20-11-6, Interior (1) 20-11-6 to 35-11-0 zone; cantilever left and right exposed ; end vertical left and right exposed;C-C for members and forces & MWFRS for reactions shown; Lumber DOL=1.60 plate grip DOL=1.60
3) TCLL: ASCE 7-16; Pr=20.0 psf (roof LL: Lum DOL=1.15 Plate DOL=1.15); Pg=20.0 psf; Pf=15.4 psf (Lum DOL = 1.15 Plate DOL = 1.15); Is=1.0; Rough Cat B; Partially Exp.; Ce=1.0; Cs=1.00; Ct=1.10
4) Unbalanced snow loads have been considered for this design.
5) This truss has been designed for greater of min roof live load of 12.0 psf or 2.00 times flat roof load of 15.4 psf on overhangs non-concurrent with other live loads.
6) 250.0lb AC unit load placed on the bottom chord, 17-5-8 from left end, supported at two points, 5-0-0 apart.
7) All plates are MT20 plates unless otherwise indicated.
8) Plates checked for a plus or minus 5 degree rotation about its center.
9) This truss has been designed for a 10.0 psf bottom chord live load nonconcurrent with any other live loads.
10) * This truss has been designed for a live load of 20.0psf on the bottom chord in all areas where a rectangle 3-06-00 tall by 2-00-00 wide will fit between the bottom chord and any other members.
11) This truss has been designed for a moving concentrated load of 250.0lb live and 3.0lb dead located at all mid panels and at all panel points along the Top Chord and Bottom Chord, nonconcurrent with any other live loads.
12) This truss design requires that a minimum of 7/16" structural wood sheathing be applied directly to the top chord and 1/2" gypsum sheetrock be applied directly to the bottom chord.
13) Attic room checked for L/360 deflection.

LOAD CASE(S) Standard

May 28,2025

WARNING - Verify design parameters and READ NOTES ON THIS AND INCLUDED MITEK REFERENCE PAGE MII-7473 rev. 1/2/2023 BEFORE USE.
Design valid for use only with MiTek® connectors. This design is based only upon parameters shown, and is for an individual building component, not a truss system. Before use, the building designer must verify the applicability of design parameters and properly incorporate this design into the overall building design. Bracing indicated is to prevent buckling of individual truss web and/or chord members only. Additional temporary and permanent bracing is always required for stability and to prevent collapse with possible personal injury and property damage. For general guidance regarding the fabrication, storage, delivery, erection and bracing of trusses and truss systems, see **ANSI/TPI1 Quality Criteria and DSB-22** available from Truss Plate Institute (www.tpinst.org) and **BCSI Building Component Safety Information** available from the Structural Building Component Association (www.sbcacomponents.com)

ENGINEERING BY TRENCO A MiTek Affiliate
818 Soundside Road
Edenton, NC 27932

Job	Truss	Truss Type	Qty	Ply	Elmhurst Rev 3-Elev 5-Roof
	H3AG	Roof Special Structural Gable	1	1	I73750788 Job Reference (optional)

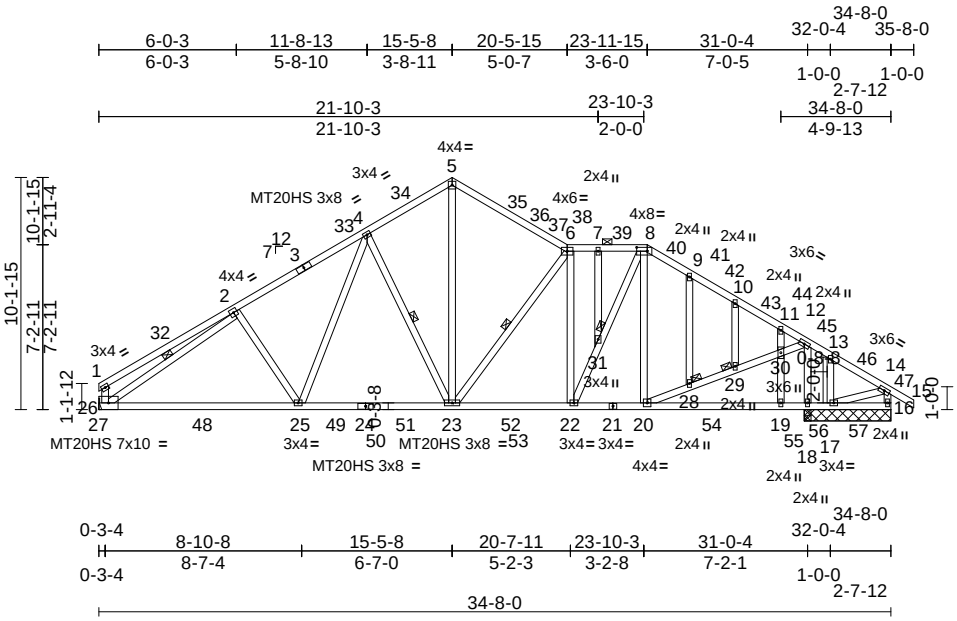

Scale = 1:100.9

Plate Offsets (X, Y): [8:0-5-8,0-2-0]

Loading	(psf)	Spacing	2-0-0	CSI		DEFL	in	(loc)	l/defl	L/d	PLATES	GRIP
TCLL (roof)	20.0	Plate Grip DOL	1.15	TC	0.77	Vert(LL)	-0.25	25-26	>999	360	MT20HS	187/143
Snow (Pf/Pg)	20.4/20.0	Lumber DOL	1.15	BC	0.96	Vert(CT)	-0.34	25-26	>999	240	MT20	244/190
TCDL	10.0	Rep Stress Incr	YES	WB	0.70	Horz(CT)	0.04	18	n/a	n/a		
BCLL	0.0*	Code	IRC2021/TPI2014	Matrix-AS		Wind(LL)	0.03	23-25	>999	240		
BCDL	10.0										Weight: 256 lb	FT = 20%

LUMBER

TOP CHORD 2x4 SP No.2
BOT CHORD 2x4 SP No.2 *Except* 24-27:2x4 SP SS
WEBS 2x4 SP No.3 *Except* 20-12,26-1:2x4 SP No.2
OTHERS 2x4 SP No.3

BRACING

TOP CHORD Structural wood sheathing directly applied, except end verticals, and 2-0-0 oc purlins (4-7-3 max.): 6-8.
BOT CHORD Rigid ceiling directly applied.
WEBS 1 Row at midpt 6-23, 2-26, 4-23
JOINTS 1 Brace at Jt(s): 28, 29, 31

REACTIONS (size) 16=3-9-8, 17=3-9-8, 18=0-3-8, 26= Mechanical
Max Horiz 26=-172 (LC 12)
Max Uplift 16=-104 (LC 70), 17=-372 (LC 93)
Max Grav 16=234 (LC 115), 17=175 (LC 114), 18=2132 (LC 63), 26=1370 (LC 34)

FORCES (lb) - Maximum Compression/Maximum Tension

TOP CHORD 1-2=-542/38, 2-4=-1932/114, 4-5=-1474/152, 5-6=-1476/144, 6-7=-1486/116, 7-8=-1486/116, 8-9=-1302/100, 9-10=-1363/83, 10-11=-1377/58, 11-12=-1373/15, 12-13=0/389, 13-14=-21/357, 14-15=0/47, 1-26=-408/40, 14-16=-196/156
BOT CHORD 26-27=0/0, 25-26=-12/1631, 23-25=0/1379, 22-23=0/1424, 20-22=0/1089, 19-20=-292/52, 18-19=-292/52, 17-18=-292/52, 16-17=-29/91
WEBS 5-23=-71/1151, 6-23=-540/82, 6-22=-565/69, 22-31=-26/759, 8-31=-22/734, 8-20=-318/57, 20-28=0/1478, 28-29=0/1470, 29-30=0/1505, 12-30=0/1466, 2-26=-1583/76, 14-17=-325/42, 2-25=-209/107, 4-25=0/454, 4-23=-560/92, 12-18=-1615/0, 13-17=-221/127, 9-28=-61/49, 10-29=-176/30, 11-30=-145/132, 19-30=-288/135, 7-31=-48/61

NOTES

1) Unbalanced roof live loads have been considered for this design.
2) Wind: ASCE 7-16; Vult=120mph (3-second gust) Vasd=95mph; TCDL=6.0psf; BCDL=6.0psf; h=25ft; Cat. II; Exp B; Enclosed; MWFRS (envelope) and C-C Exterior(2E) 0-3-4 to 3-9-2, Interior (1) 3-9-2 to 15-5-8, Exterior(2R) 15-5-8 to 18-11-6, Interior (1) 18-11-6 to 23-11-15, Exterior(2R) 23-11-15 to 27-5-14, Interior (1) 27-5-14 to 35-8-0 zone; cantilever left and right exposed ; end vertical left and right exposed;C-C for members and forces & MWFRS for reactions shown; Lumber DOL=1.60 plate grip DOL=1.60
3) Truss designed for wind loads in the plane of the truss only. For studs exposed to wind (normal to the face), see Standard Industry Gable End Details as applicable, or consult qualified building designer as per ANSI/TPI 1.
4) TCLL: ASCE 7-16; Pr=20.0 psf (roof LL: Lum DOL=1.15 Plate DOL=1.15); Pg=20.0 psf; Pf=20.4 psf (Lum DOL = 1.15 Plate DOL = 1.15); Is=1.0; Rough Cat B; Partially Exp.; Ce=1.0; Cs=1.00; Ct=1.10, Lu=50-0-0
5) Unbalanced snow loads have been considered for this design.
6) This truss has been designed for greater of min roof live load of 12.0 psf or 2.00 times flat roof load of 15.4 psf on overhangs non-concurrent with other live loads.
7) Provide adequate drainage to prevent water ponding.
8) All plates are MT20 plates unless otherwise indicated.
9) Plates checked for a plus or minus 5 degree rotation about its center.
10) Truss to be fully sheathed from one face or securely braced against lateral movement (i.e. diagonal web).
11) Gable studs spaced at 2-0-0 oc.
12) This truss has been designed for a 10.0 psf bottom chord live load nonconcurrent with any other live loads.
13) * This truss has been designed for a live load of 20.0psf on the bottom chord in all areas where a rectangle 3-06-00 tall by 2-00-00 wide will fit between the bottom chord and any other members, with BCDL = 10.0psf.
14) Refer to girder(s) for truss to truss connections.
15) N/A
16) This truss has been designed for a moving concentrated load of 250.0lb live and 3.0lb dead located at all mid panels and at all panel points along the Top Chord and Bottom Chord, nonconcurrent with any other live loads.

May 28,2025

Continued on page 2

WARNING - Verify design parameters and READ NOTES ON THIS AND INCLUDED MITEK REFERENCE PAGE MII-7473 rev. 1/2/2023 BEFORE USE.
Design valid for use only with MiTek® connectors. This design is based only upon parameters shown, and is for an individual building component, not a truss system. Before use, the building designer must verify the applicability of design parameters and properly incorporate this design into the overall building design. Bracing indicated is to prevent buckling of individual truss web and/or chord members only. Additional temporary and permanent bracing is always required for stability and to prevent collapse with possible personal injury and property damage. For general guidance regarding the fabrication, storage, delivery, erection and bracing of trusses and truss systems, see **ANSI/TPI1 Quality Criteria and DSB-22** available from Truss Plate Institute (www.tpinst.org) and **BCSI Building Component Safety Information** available from the Structural Building Component Association (www.sbcacomponents.com)

ENGINEERING BY TRENCO A MiTek Affiliate
818 Soundside Road
Edenton, NC 27932

17) This truss design requires that a minimum of 7/16" structural wood sheathing be applied directly to the top chord and 1/2" gypsum sheetrock be applied directly to the bottom chord.
18) Graphical purlin representation does not depict the size or the orientation of the purlin along the top and/or bottom chord.

LOAD CASE(S) Standard

NORTH CAROLINA PROFESSIONAL SEAL 036322 ENGINEER ERIC A. GILBERT

May 28,2025

WARNING - Verify design parameters and READ NOTES ON THIS AND INCLUDED MITEK REFERENCE PAGE MII-7473 rev. 1/2/2023 BEFORE USE.
Design valid for use only with MiTek® connectors. This design is based only upon parameters shown, and is for an individual building component, not a truss system. Before use, the building designer must verify the applicability of design parameters and properly incorporate this design into the overall building design. Bracing indicated is to prevent buckling of individual truss web and/or chord members only. Additional temporary and permanent bracing is always required for stability and to prevent collapse with possible personal injury and property damage. For general guidance regarding the fabrication, storage, delivery, erection and bracing of trusses and truss systems, see **ANSI/TPI1 Quality Criteria and DSB-22** available from Truss Plate Institute (www.tpinst.org) and **BCSI Building Component Safety Information** available from the Structural Building Component Association (www.sbcacomponents.com)

ENGINEERING BY TRENCO A MiTek Affiliate
818 Soundside Road
Edenton, NC 27932

Job	Truss	Truss Type	Qty	Ply	Elmhurst Rev 3-Elev 5-Roof
	A2A	Common	1	1	I73750789 Job Reference (optional)

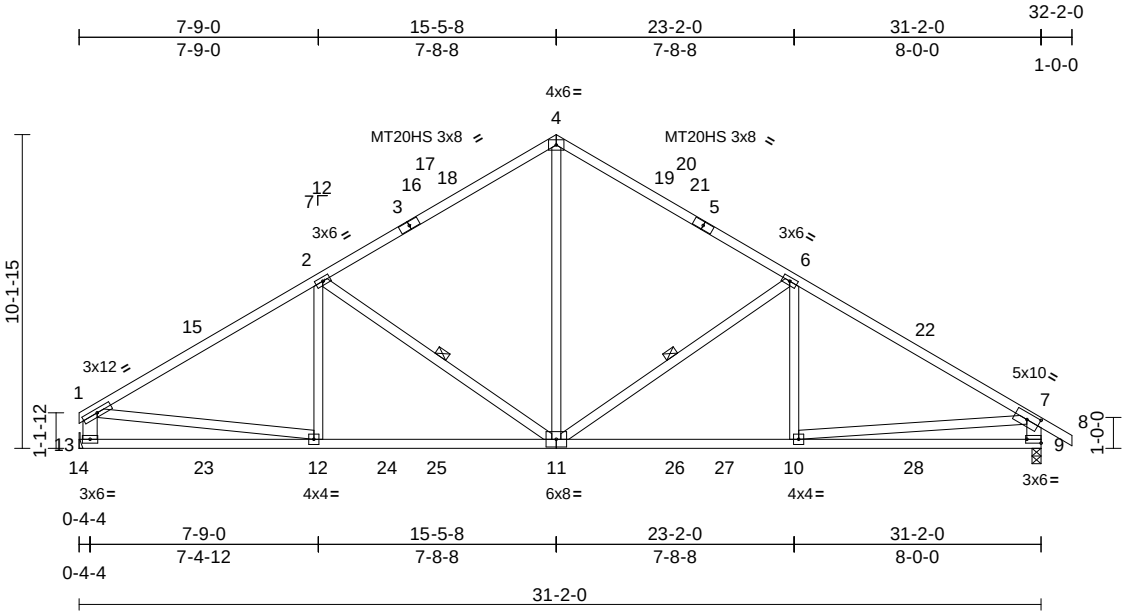

Scale = 1:74.7

Plate Offsets (X, Y): [7:0-4-15,0-2-8], [9:Edge,0-1-8]

Loading	(psf)	Spacing	2-0-0	CSI		DEFL	in	(loc)	l/defl	L/d	PLATES	GRIP
TCLL (roof)	20.0	Plate Grip DOL	1.15	TC	1.00	Vert(LL)	-0.25	10-11	>999	360	MT20HS	187/143
Snow (Pf/Pg)	15.4/20.0	Lumber DOL	1.15	BC	0.55	Vert(CT)	-0.34	11-12	>999	240	MT20	244/190
TCDL	10.0	Rep Stress Incr	YES	WB	0.48	Horz(CT)	0.04	9	n/a	n/a		
BCLL	0.0*	Code	IRC2021/TPI2014	Matrix-AS		Wind(LL)	0.03	11-12	>999	240		
BCDL	10.0										Weight: 183 lb	FT = 20%

LUMBER
TOP CHORD 2x4 SP No.2
BOT CHORD 2x4 SP SS
WEBS 2x4 SP No.3 *Except* 13-1,9-7:2x6 SP No.2

BRACING
TOP CHORD Structural wood sheathing directly applied, except end verticals.
BOT CHORD Rigid ceiling directly applied.
WEBS 1 Row at midpt 2-11, 6-11

REACTIONS (size) 9=0-3-8, 13= Mechanical
Max Horiz 13=-173 (LC 12)
Max Grav 9=1448 (LC 35), 13=1391 (LC 34)

FORCES (lb) - Maximum Compression/Maximum Tension
TOP CHORD 1-2=-2065/67, 2-4=-1569/127, 4-6=-1568/127, 6-7=-2139/67, 7-8=0/51, 1-13=-1394/61, 7-9=-1469/97
BOT CHORD 13-14=0/0, 12-13=-103/469, 10-12=0/1739, 9-10=-31/568
WEBS 2-12=-8/289, 2-11=-614/86, 4-11=-1/1022, 6-11=-677/85, 6-10=0/329, 1-12=0/1323, 7-10=0/1182

NOTES
1) Unbalanced roof live loads have been considered for this design.
2) Wind: ASCE 7-16; Vult=120mph (3-second gust) Vasd=95mph; TCDL=6.0psf; BCDL=6.0psf; h=25ft; Cat. II; Exp B; Enclosed; MWFRS (envelope) and C-C Exterior(2E) 0-4-4 to 3-5-15, Interior (1) 3-5-15 to 15-5-8, Exterior(2R) 15-5-8 to 18-7-3, Interior (1) 18-7-3 to 32-2-0 zone; cantilever left and right exposed ; end vertical left and right exposed;C-C for members and forces & MWFRS for reactions shown; Lumber DOL=1.60 plate grip DOL=1.60
3) TCLL: ASCE 7-16; Pr=20.0 psf (roof LL: Lum DOL=1.15 Plate DOL=1.15); Pg=20.0 psf; Pf=15.4 psf (Lum DOL = 1.15 Plate DOL = 1.15); Is=1.0; Rough Cat B; Partially Exp.; Ce=1.0; Cs=1.00; Ct=1.10
4) Unbalanced snow loads have been considered for this design.
5) This truss has been designed for greater of min roof live load of 12.0 psf or 2.00 times flat roof load of 15.4 psf on overhangs non-concurrent with other live loads.
6) All plates are MT20 plates unless otherwise indicated.
7) Plates checked for a plus or minus 5 degree rotation about its center.
8) This truss has been designed for a 10.0 psf bottom chord live load nonconcurrent with any other live loads.
9) * This truss has been designed for a live load of 20.0psf on the bottom chord in all areas where a rectangle 3-06-00 tall by 2-00-00 wide will fit between the bottom chord and any other members, with BCDL = 10.0psf.
10) Refer to girder(s) for truss to truss connections.
11) This truss has been designed for a moving concentrated load of 250.0lb live and 3.0lb dead located at all mid panels and at all panel points along the Top Chord and Bottom Chord, nonconcurrent with any other live loads.
12) This truss design requires that a minimum of 7/16" structural wood sheathing be applied directly to the top chord and 1/2" gypsum sheetrock be applied directly to the bottom chord.

LOAD CASE(S) Standard

May 28,2025

WARNING - Verify design parameters and READ NOTES ON THIS AND INCLUDED MITEK REFERENCE PAGE MII-7473 rev. 1/2/2023 BEFORE USE.
Design valid for use only with MiTek® connectors. This design is based only upon parameters shown, and is for an individual building component, not a truss system. Before use, the building designer must verify the applicability of design parameters and properly incorporate this design into the overall building design. Bracing indicated is to prevent buckling of individual truss web and/or chord members only. Additional temporary and permanent bracing is always required for stability and to prevent collapse with possible personal injury and property damage. For general guidance regarding the fabrication, storage, delivery, erection and bracing of trusses and truss systems, see **ANSI/TPI1 Quality Criteria and DSB-22** available from Truss Plate Institute (www.tpinst.org) and **BCSI Building Component Safety Information** available from the Structural Building Component Association (www.sbcacomponents.com)

ENGINEERING BY TRENCO A MiTek Affiliate
818 Soundside Road
Edenton, NC 27932

Job	Truss	Truss Type	Qty	Ply	Elmhurst Rev 3-Elev 5-Roof
	H3A	Roof Special	1	1	I73750790 Job Reference (optional)

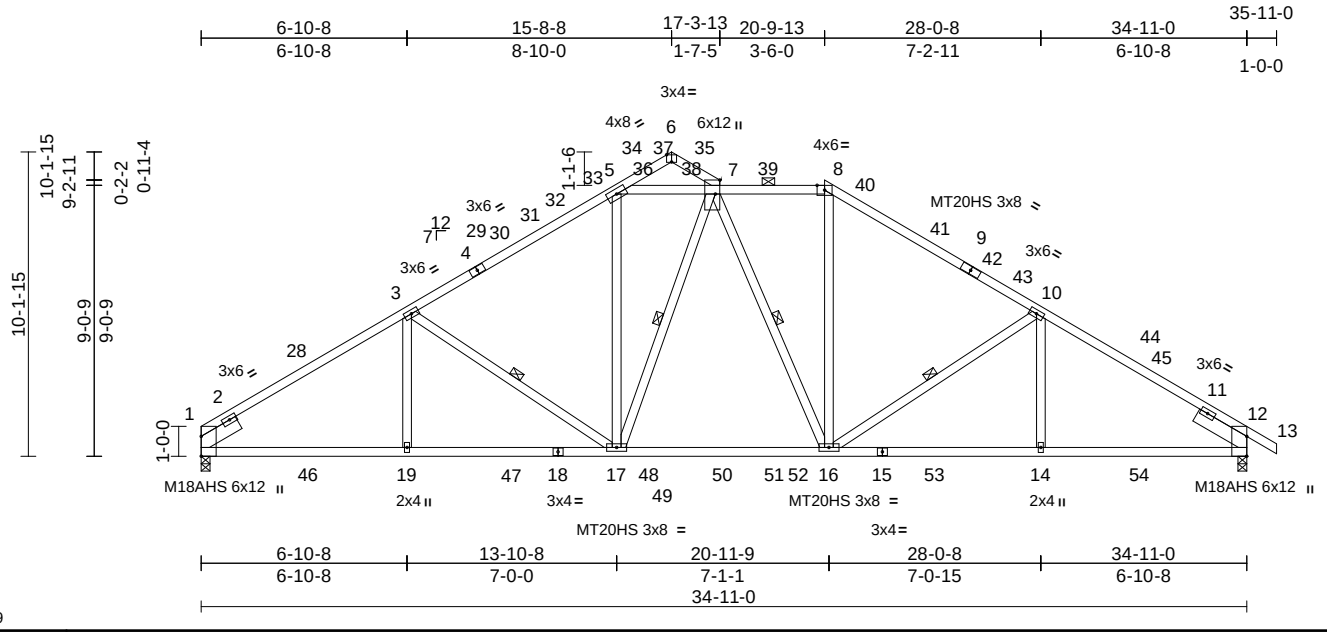

Scale = 1:76.9

Plate Offsets (X, Y): [6:0-2-0,Edge], [7:0-5-10,0-1-12]

Loading	(psf)	Spacing	2-0-0	CSI		DEFL	in	(loc)	l/defl	L/d	PLATES	GRIP
TCLL (roof)	20.0	Plate Grip DOL	1.15	TC	0.86	Vert(LL)	-0.23	14-16	>999	360	MT20	244/190
Snow (Pf/Pg)	20.4/20.0	Lumber DOL	1.15	BC	0.67	Vert(CT)	-0.42	16-17	>999	240	MT20HS	187/143
TCDL	10.0	Rep Stress Incr	YES	WB	0.27	Horz(CT)	0.14	12	n/a	n/a	M18AHS	186/179
BCLL	0.0*	Code	IRC2021/TPI2014	Matrix-AS		Wind(LL)	0.05	17-19	>999	240		
BCDL	10.0										Weight: 217 lb	FT = 20%

LUMBER

TOP CHORD 2x4 SP No.2 *Except* 8-9,4-1,9-13:2x4 SP SS
BOT CHORD 2x4 SP SS
WEBS 2x4 SP No.3
SLIDER Left 2x6 SP No.2 -- 1-6-0, Right 2x6 SP No.2 -- 2-0-0

BRACING

TOP CHORD Structural wood sheathing directly applied, except
2-0-0 oc purlins (3-10-10 max.): 5-8.
BOT CHORD Rigid ceiling directly applied.
WEBS 1 Row at midpt 7-17, 10-16, 7-16, 3-17

REACTIONS (size) 1=0-3-8, 12=0-3-8
Max Horiz 1=-153 (LC 14)
Max Grav 1=1686 (LC 34), 12=1770 (LC 63)

FORCES (lb) - Maximum Compression/Maximum Tension
TOP CHORD 1-3=-2716/191, 3-5=-2343/0, 5-6=-237/51, 6-7=-235/107, 5-7=-2004/0, 7-8=-1972/0, 8-10=-2344/0, 10-12=-2812/206, 12-13=0/41
BOT CHORD 1-19=-20/2217, 17-19=0/2217, 16-17=0/1903, 14-16=0/2303, 12-14=0/2303
WEBS 8-16=0/731, 7-17=-196/175, 10-14=0/306, 10-16=-541/129, 3-19=0/298, 5-17=0/720, 7-16=-177/170, 3-17=-391/116

NOTES

1) Unbalanced roof live loads have been considered for this design.
2) Wind: ASCE 7-16; Vult=120mph (3-second gust) Vasd=95mph; TCDL=6.0psf; BCDL=6.0psf; h=25ft; Cat. II; Exp B; Enclosed; MWFRS (envelope) and C-C Exterior(2E) 0-0-0 to 3-5-14, Interior (1) 3-5-14 to 15-8-8, Exterior(2E) 15-8-8 to 17-0-13, Interior (1) 17-0-13 to 20-9-13, Exterior(2R) 20-9-13 to 24-3-12, Interior (1) 24-3-12 to 35-11-0 zone; cantilever left and right exposed ; end vertical left and right exposed;C-C for members and forces & MWFRS for reactions shown; Lumber DOL=1.60 plate grip DOL=1.60
3) TCLL: ASCE 7-16; Pr=20.0 psf (roof LL: Lum DOL=1.15 Plate DOL=1.15); Pg=20.0 psf; Pf=20.4 psf (Lum DOL = 1.15 Plate DOL = 1.15); Is=1.0; Rough Cat B; Partially Exp.; Ce=1.0; Cs=1.00; Ct=1.10, Lu=50-0-0
4) Unbalanced snow loads have been considered for this design.
5) This truss has been designed for greater of min roof live load of 12.0 psf or 2.00 times flat roof load of 15.4 psf on overhangs non-concurrent with other live loads.
6) 250.0lb AC unit load placed on the bottom chord, 17-5-8 from left end, supported at two points, 5-0-0 apart.
7) Provide adequate drainage to prevent water ponding.
8) All plates are MT20 plates unless otherwise indicated.
9) Plates checked for a plus or minus 5 degree rotation about its center.
10) This truss has been designed for a 10.0 psf bottom chord live load nonconcurrent with any other live loads.
11) * This truss has been designed for a live load of 20.0psf on the bottom chord in all areas where a rectangle 3-06-00 tall by 2-00-00 wide will fit between the bottom chord and any other members, with BCDL = 10.0psf.
12) This truss has been designed for a moving concentrated load of 250.0lb live and 3.0lb dead located at all mid panels and at all panel points along the Top Chord and Bottom Chord, nonconcurrent with any other live loads.
13) This truss design requires that a minimum of 7/16" structural wood sheathing be applied directly to the top chord and 1/2" gypsum sheetrock be applied directly to the bottom chord.
14) Graphical purlin representation does not depict the size or the orientation of the purlin along the top and/or bottom chord.

LOAD CASE(S) Standard

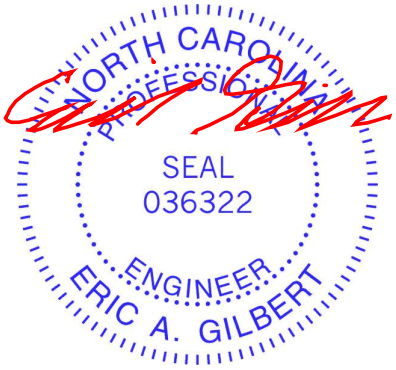

May 28,2025

WARNING - Verify design parameters and READ NOTES ON THIS AND INCLUDED MITEK REFERENCE PAGE MII-7473 rev. 1/2/2023 BEFORE USE.
Design valid for use only with MiTek® connectors. This design is based only upon parameters shown, and is for an individual building component, not a truss system. Before use, the building designer must verify the applicability of design parameters and properly incorporate this design into the overall building design. Bracing indicated is to prevent buckling of individual truss web and/or chord members only. Additional temporary and permanent bracing is always required for stability and to prevent collapse with possible personal injury and property damage. For general guidance regarding the fabrication, storage, delivery, erection and bracing of trusses and truss systems, see **ANSI/TPI1 Quality Criteria and DSB-22** available from Truss Plate Institute (www.tpinst.org) and **BCSI Building Component Safety Information** available from the Structural Building Component Association (www.sbcacomponents.com)

ENGINEERING BY TRENCO A MiTek Affiliate
818 Soundside Road
Edenton, NC 27932

Job	Truss	Truss Type	Qty	Ply	Elmhurst Rev 3-Elev 5-Roof
	A2AT	Roof Special	1	1	Job Reference (optional) I73750791

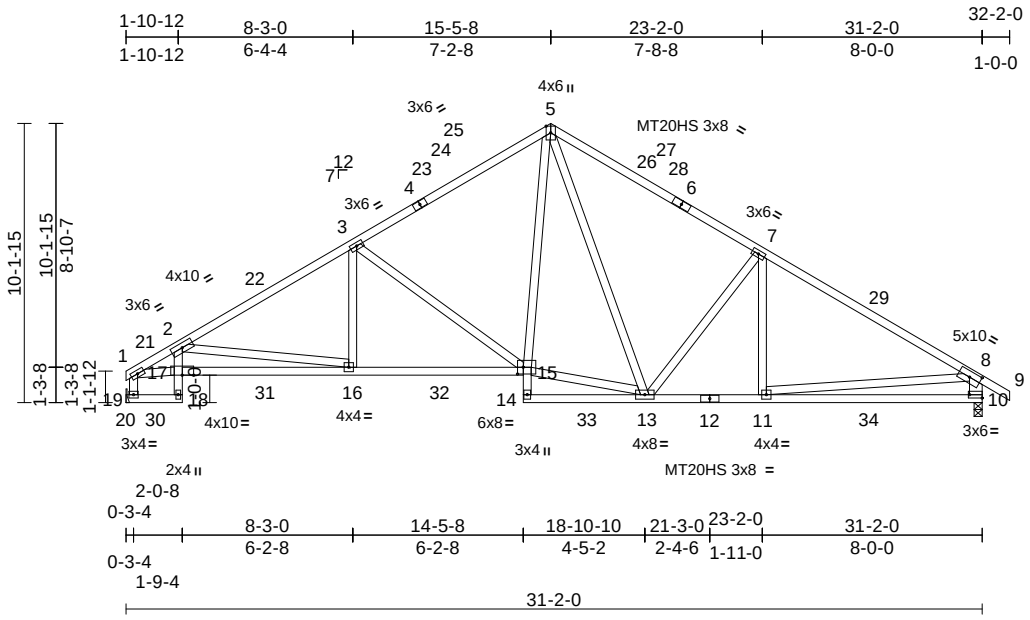

Scale = 1:83.9

Plate Offsets (X, Y): [8:0-4-15,0-2-8], [10:Edge,0-1-8], [15:0-2-8,0-3-0]

Loading	(psf)	Spacing	2-0-0	CSI		DEFL	in	(loc)	l/defl	L/d	PLATES	GRIP
TCLL (roof)	20.0	Plate Grip DOL	1.15	TC	0.72	Vert(LL)	-0.19	10-11	>999	360	MT20	244/190
Snow (Pf/Pg)	15.4/20.0	Lumber DOL	1.15	BC	0.75	Vert(CT)	-0.28	10-11	>999	240	MT20HS	187/143
TCDL	10.0	Rep Stress Incr	YES	WB	0.80	Horz(CT)	0.10	10	n/a	n/a		
BCLL	0.0*	Code	IRC2021/TPI2014	Matrix-AS		Wind(LL)	0.04	16-17	>999	240		
BCDL	10.0										Weight: 200 lb	FT = 20%

LUMBER

TOP CHORD 2x4 SP SS *Except* 4-1,6-9:2x4 SP No.2
BOT CHORD 2x4 SP No.2 *Except* 18-2,15-14:2x4 SP No.3, 17-15,12-10:2x4 SP SS
WEBS 2x4 SP No.3 *Except* 10-8:2x6 SP No.2

BRACING

TOP CHORD Structural wood sheathing directly applied, except end verticals.
BOT CHORD Rigid ceiling directly applied.

REACTIONS (size) 10=0-3-8, 19= Mechanical
Max Horiz 19=-173 (LC 12)
Max Grav 10=1302 (LC 2), 19=1231 (LC 2)

FORCES (lb) - Maximum Compression/Maximum Tension

TOP CHORD 1-2=-2317/48, 2-3=-2033/64, 3-5=-1483/116, 5-7=-1502/143, 7-8=-1777/70, 8-9=0/51, 1-19=-1218/21, 8-10=-1260/99
BOT CHORD 19-20=0/0, 18-19=-78/159, 17-18=-51/246, 2-17=0/309, 16-17=-37/2209, 15-16=0/1669, 14-15=0/175, 13-14=-141/113, 11-13=0/1427, 10-11=-27/561
WEBS 2-16=-596/94, 3-16=0/433, 3-15=-682/77, 7-11=0/302, 8-11=0/940, 5-15=0/739, 5-13=-63/333, 13-15=0/1061, 7-13=-489/90, 1-17=-14/1860

NOTES

1) Unbalanced roof live loads have been considered for this design.
2) Wind: ASCE 7-16; Vult=120mph (3-second gust) Vasd=95mph; TCDL=6.0psf; BCDL=6.0psf; h=25ft; Cat. II; Exp B; Enclosed; MWFRS (envelope) and C-C Exterior(2E) 0-3-4 to 3-4-15, Interior (1) 3-4-15 to 15-5-8, Exterior(2R) 15-5-8 to 18-7-3, Interior (1) 18-7-3 to 32-2-0 zone; cantilever left and right exposed ; end vertical left and right exposed;C-C for members and forces & MWFRS for reactions shown; Lumber DOL=1.60 plate grip DOL=1.60
3) TCLL: ASCE 7-16; Pr=20.0 psf (roof LL: Lum DOL=1.15 Plate DOL=1.15); Pg=20.0 psf; Pf=15.4 psf (Lum DOL = 1.15 Plate DOL = 1.15); Is=1.0; Rough Cat B; Partially Exp.; Ce=1.0; Cs=1.00; Ct=1.10
4) Unbalanced snow loads have been considered for this design.
5) This truss has been designed for greater of min roof live load of 12.0 psf or 2.00 times flat roof load of 15.4 psf on overhangs non-concurrent with other live loads.
6) All plates are MT20 plates unless otherwise indicated.
7) Plates checked for a plus or minus 5 degree rotation about its center.
8) This truss has been designed for a 10.0 psf bottom chord live load nonconcurrent with any other live loads.
9) * This truss has been designed for a live load of 20.0psf on the bottom chord in all areas where a rectangle 3-06-00 tall by 2-00-00 wide will fit between the bottom chord and any other members.
10) Refer to girder(s) for truss to truss connections.
11) This truss has been designed for a moving concentrated load of 250.0lb live and 3.0lb dead located at all mid panels and at all panel points along the Top Chord and Bottom Chord, nonconcurrent with any other live loads.
12) This truss design requires that a minimum of 7/16" structural wood sheathing be applied directly to the top chord and 1/2" gypsum sheetrock be applied directly to the bottom chord.

LOAD CASE(S) Standard

May 28,2025

WARNING - Verify design parameters and READ NOTES ON THIS AND INCLUDED MITEK REFERENCE PAGE MII-7473 rev. 1/2/2023 BEFORE USE.
Design valid for use only with MiTek® connectors. This design is based only upon parameters shown, and is for an individual building component, not a truss system. Before use, the building designer must verify the applicability of design parameters and properly incorporate this design into the overall building design. Bracing indicated is to prevent buckling of individual truss web and/or chord members only. Additional temporary and permanent bracing is always required for stability and to prevent collapse with possible personal injury and property damage. For general guidance regarding the fabrication, storage, delivery, erection and bracing of trusses and truss systems, see **ANSI/TPI1 Quality Criteria and DSB-22** available from Truss Plate Institute (www.tpinst.org) and **BCSI Building Component Safety Information** available from the Structural Building Component Association (www.sbcacomponents.com)

ENGINEERING BY TRENCO A MiTek Affiliate
818 Soundside Road
Edenton, NC 27932

Job	Truss	Truss Type	Qty	Ply	Elmhurst Rev 3-Elev 5-Roof
	B1GE	Common Supported Gable	1	1	I73750792 Job Reference (optional)

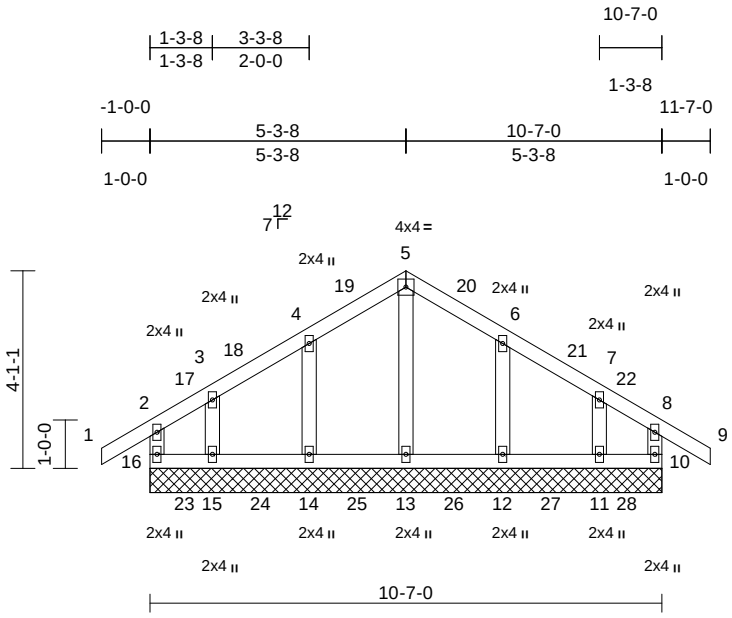

Scale = 1:47.6

Loading	(psf)	Spacing	2-0-0	CSI		DEFL	in	(loc)	l/defl	L/d	PLATES	GRIP
TCLL (roof)	20.0	Plate Grip DOL	1.15	TC	0.20	Vert(LL)	n/a	-	n/a	999	MT20	244/190
Snow (Pf/Pg)	15.4/20.0	Lumber DOL	1.15	BC	0.19	Vert(CT)	n/a	-	n/a	999		
TCDL	10.0	Rep Stress Incr	YES	WB	0.08	Horz(CT)	0.00	10	n/a	n/a		
BCLL	0.0*	Code	IRC2021/TPI2014	Matrix-AS								
BCDL	10.0										Weight: 55 lb	FT = 20%

LUMBER

TOP CHORD 2x4 SP No.2
BOT CHORD 2x4 SP No.2
WEBS 2x4 SP No.3
OTHERS 2x4 SP No.3

BRACING

TOP CHORD Structural wood sheathing directly applied, except end verticals.
BOT CHORD Rigid ceiling directly applied.

REACTIONS (size) 10=10-7-0, 11=10-7-0, 12=10-7-0, 13=10-7-0, 14=10-7-0, 15=10-7-0, 16=10-7-0
Max Horiz 16=-77 (LC 14)
Max Uplift 10=-17 (LC 13), 11=-20 (LC 17), 12=-9 (LC 17), 14=-9 (LC 16), 15=-26 (LC 13), 16=-27 (LC 12)
Max Grav 10=297 (LC 69), 11=312 (LC 68), 12=338 (LC 67), 13=334 (LC 66), 14=338 (LC 65), 15=312 (LC 64), 16=297 (LC 63)

FORCES (lb) - Maximum Compression/Maximum Tension
TOP CHORD 2-16=-285/102, 1-2=0/47, 2-3=-44/95, 3-4=-85/67, 4-5=-83/128, 5-6=-83/128, 6-7=-85/68, 7-8=-44/95, 8-9=0/47, 8-10=-285/100
BOT CHORD 15-16=-40/57, 14-15=-40/57, 13-14=-40/57, 12-13=-40/57, 11-12=-40/57, 10-11=-40/57
WEBS 5-13=-271/0, 4-14=-289/98, 3-15=-269/77, 6-12=-289/98, 7-11=-269/76

NOTES

1) Unbalanced roof live loads have been considered for this design.
2) Wind: ASCE 7-16; Vult=120mph (3-second gust) Vasd=95mph; TCDL=6.0psf; BCDL=6.0psf; h=25ft; Cat. II; Exp B; Enclosed; MWFRS (envelope) and C-C Corner (3E) -1-0-0 to 2-0-0, Exterior(2N) 2-0-0 to 5-3-8, Corner (3R) 5-3-8 to 8-3-8, Exterior(2N) 8-3-8 to 11-7-0 zone; cantilever left and right exposed ; end vertical left and right exposed;C-C for members and forces & MWFRS for reactions shown; Lumber DOL=1.60 plate grip DOL=1.60
3) Truss designed for wind loads in the plane of the truss only. For studs exposed to wind (normal to the face), see Standard Industry Gable End Details as applicable, or consult qualified building designer as per ANSI/TPI 1.
4) TCLL: ASCE 7-16; Pr=20.0 psf (roof LL: Lum DOL=1.15 Plate DOL=1.15); Pg=20.0 psf; Pf=15.4 psf (Lum DOL = 1.15 Plate DOL = 1.15); Is=1.0; Rough Cat B; Partially Exp.; Ce=1.0; Cs=1.00; Ct=1.10
5) Unbalanced snow loads have been considered for this design.
6) This truss has been designed for greater of min roof live load of 12.0 psf or 2.00 times flat roof load of 15.4 psf on overhangs non-concurrent with other live loads.
7) Plates checked for a plus or minus 5 degree rotation about its center.
8) Gable requires continuous bottom chord bearing.
9) Truss to be fully sheathed from one face or securely braced against lateral movement (i.e. diagonal web).
10) Gable studs spaced at 2-0-0 oc.
11) This truss has been designed for a 10.0 psf bottom chord live load nonconcurrent with any other live loads.
12) * This truss has been designed for a live load of 20.0psf on the bottom chord in all areas where a rectangle 3-06-00 tall by 2-00-00 wide will fit between the bottom chord and any other members.
13) Provide mechanical connection (by others) of truss to bearing plate capable of withstanding 27 lb uplift at joint 16, 17 lb uplift at joint 10, 9 lb uplift at joint 14, 26 lb uplift at joint 15, 9 lb uplift at joint 12 and 20 lb uplift at joint 11.
14) This truss has been designed for a moving concentrated load of 250.0lb live and 3.0lb dead located at all mid panels and at all panel points along the Top Chord and Bottom Chord, nonconcurrent with any other live loads.
15) This truss design requires that a minimum of 7/16" structural wood sheathing be applied directly to the top chord and 1/2" gypsum sheetrock be applied directly to the bottom chord.

LOAD CASE(S) Standard

May 28,2025

WARNING - Verify design parameters and READ NOTES ON THIS AND INCLUDED MITEK REFERENCE PAGE MII-7473 rev. 1/2/2023 BEFORE USE.
Design valid for use only with MiTek® connectors. This design is based only upon parameters shown, and is for an individual building component, not a truss system. Before use, the building designer must verify the applicability of design parameters and properly incorporate this design into the overall building design. Bracing indicated is to prevent buckling of individual truss web and/or chord members only. Additional temporary and permanent bracing is always required for stability and to prevent collapse with possible personal injury and property damage. For general guidance regarding the fabrication, storage, delivery, erection and bracing of trusses and truss systems, see **ANSI/TPI1 Quality Criteria and DSB-22** available from Truss Plate Institute (www.tpinst.org) and **BCSI Building Component Safety Information** available from the Structural Building Component Association (www.sbcacomponents.com)

ENGINEERING BY TRENCO A MiTek Affiliate
818 Soundside Road
Edenton, NC 27932

Job	Truss	Truss Type	Qty	Ply	Elmhurst Rev 3-Elev 5-Roof
	B2	Common	3	1	I73750793 Job Reference (optional)

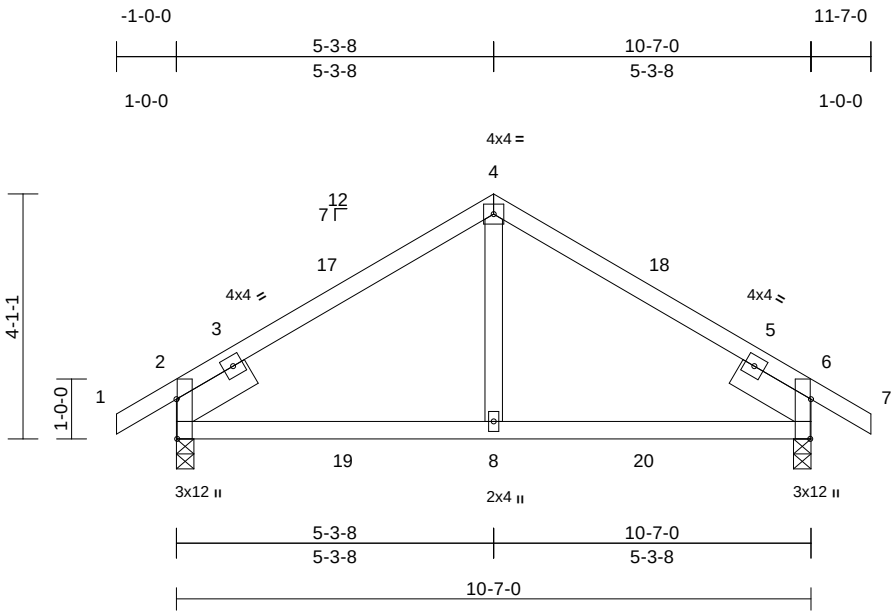

Scale = 1:38.4

Plate Offsets (X, Y): [2:0-7-15,Edge], [6:0-7-15,Edge]

Loading	(psf)	Spacing	2-0-0	CSI		DEFL	in	(loc)	l/defl	L/d	PLATES	GRIP
TCLL (roof)	20.0	Plate Grip DOL	1.15	TC	0.53	Vert(LL)	-0.08	8-15	>999	360	MT20	244/190
Snow (Pf/Pg)	15.4/20.0	Lumber DOL	1.15	BC	0.64	Vert(CT)	-0.09	8-15	>999	240		
TCDL	10.0	Rep Stress Incr	YES	WB	0.12	Horz(CT)	0.02	2	n/a	n/a		
BCLL	0.0*	Code	IRC2021/TPI2014	Matrix-AS		Wind(LL)	0.01	8-11	>999	240		
BCDL	10.0										Weight: 50 lb	FT = 20%

LUMBER

TOP CHORD	2x4 SP No.2
BOT CHORD	2x4 SP No.2
WEBS	2x4 SP No.3
SLIDER	Left 2x6 SP No.2 -- 1-6-0, Right 2x6 SP No.2 -- 1-6-0

BRACING

TOP CHORD	Structural wood sheathing directly applied.
BOT CHORD	Rigid ceiling directly applied.

REACTIONS (size) 2=0-3-8, 6=0-3-8
Max Horiz 2=59 (LC 15)
Max Grav 2=494 (LC 23), 6=494 (LC 24)

FORCES (lb) - Maximum Compression/Maximum Tension

TOP CHORD	1-2=0/41, 2-4=-425/166, 4-6=-425/166, 6-7=0/41
BOT CHORD	2-8=-54/342, 6-8=-53/342
WEBS	4-8=0/325

NOTES

1) Unbalanced roof live loads have been considered for this design.
2) Wind: ASCE 7-16; Vult=120mph (3-second gust) Vasd=95mph; TCDL=6.0psf; BCDL=6.0psf; h=25ft; Cat. II; Exp B; Enclosed; MWFRS (envelope) and C-C Exterior(2E) -1-0-0 to 2-0-0, Interior (1) 2-0-0 to 5-3-8, Exterior(2R) 5-3-8 to 8-3-8, Interior (1) 8-3-8 to 11-7-0 zone; cantilever left and right exposed ; end vertical left and right exposed;C-C for members and forces & MWFRS for reactions shown; Lumber DOL=1.60 plate grip DOL=1.60
3) TCLL: ASCE 7-16; Pr=20.0 psf (roof LL: Lum DOL=1.15 Plate DOL=1.15); Pg=20.0 psf; Pf=15.4 psf (Lum DOL = 1.15 Plate DOL = 1.15); Is=1.0; Rough Cat B; Partially Exp.; Ce=1.0; Cs=1.00; Ct=1.10
4) Unbalanced snow loads have been considered for this design.
5) This truss has been designed for greater of min roof live load of 12.0 psf or 2.00 times flat roof load of 15.4 psf on overhangs non-concurrent with other live loads.
6) Plates checked for a plus or minus 5 degree rotation about its center.
7) This truss has been designed for a 10.0 psf bottom chord live load nonconcurrent with any other live loads.
8) * This truss has been designed for a live load of 20.0psf on the bottom chord in all areas where a rectangle 3-06-00 tall by 2-00-00 wide will fit between the bottom chord and any other members.
9) This truss has been designed for a moving concentrated load of 250.0lb live and 3.0lb dead located at all mid panels and at all panel points along the Top Chord and Bottom Chord, nonconcurrent with any other live loads.
10) This truss design requires that a minimum of 7/16" structural wood sheathing be applied directly to the top chord and 1/2" gypsum sheetrock be applied directly to the bottom chord.

LOAD CASE(S) Standard

May 28,2025

WARNING - Verify design parameters and READ NOTES ON THIS AND INCLUDED MITEK REFERENCE PAGE MII-7473 rev. 1/2/2023 BEFORE USE.
Design valid for use only with MiTek® connectors. This design is based only upon parameters shown, and is for an individual building component, not a truss system. Before use, the building designer must verify the applicability of design parameters and properly incorporate this design into the overall building design. Bracing indicated is to prevent buckling of individual truss web and/or chord members only. Additional temporary and permanent bracing is always required for stability and to prevent collapse with possible personal injury and property damage. For general guidance regarding the fabrication, storage, delivery, erection and bracing of trusses and truss systems, see **ANSI/TPI1 Quality Criteria and DSB-22** available from Truss Plate Institute (www.tpinst.org) and **BCSI Building Component Safety Information** available from the Structural Building Component Association (www.sbcacomponents.com)

ENGINEERING BY TRENCO A MiTek Affiliate
818 Soundside Road
Edenton, NC 27932

Job	Truss	Truss Type	Qty	Ply	Elmhurst Rev 3-Elev 5-Roof
	B2A	Common	1	1	I73750794 Job Reference (optional)

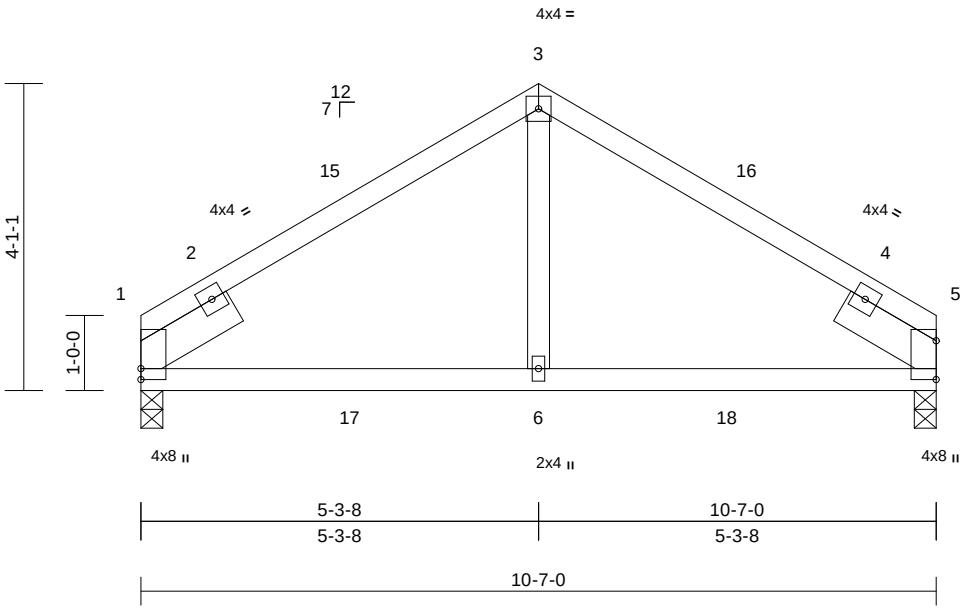

Scale = 1:30.7

Loading	(psf)	Spacing	2-0-0	CSI		DEFL	in	(loc)	l/defl	L/d	PLATES	GRIP
TCLL (roof)	20.0	Plate Grip DOL	1.15	TC	0.53	Vert(LL)	-0.08	6-13	>999	360	MT20	244/190
Snow (Pf/Pg)	15.4/20.0	Lumber DOL	1.15	BC	0.64	Vert(CT)	-0.09	6-13	>999	240		
TCDL	10.0	Rep Stress Incr	YES	WB	0.12	Horz(CT)	0.02	1	n/a	n/a		
BCLL	0.0*	Code	IRC2021/TPI2014	Matrix-AS		Wind(LL)	0.01	6-9	>999	240		
BCDL	10.0										Weight: 47 lb	FT = 20%

LUMBER
TOP CHORD 2x4 SP No.2
BOT CHORD 2x4 SP No.2
WEBS 2x4 SP No.3
SLIDER Left 2x6 SP No.2 -- 1-6-0, Right 2x6 SP No.2 -- 1-6-0

BRACING
TOP CHORD Structural wood sheathing directly applied.
BOT CHORD Rigid ceiling directly applied.

REACTIONS (size) 1=0-3-8, 5=0-3-8
Max Horiz 1=-49 (LC 12)
Max Grav 1=465 (LC 43), 5=458 (LC 46)

FORCES (lb) - Maximum Compression/Maximum Tension
TOP CHORD 1-3=-434/153, 3-5=-434/153
BOT CHORD 1-6=-66/344, 5-6=-66/344
WEBS 3-6=0/327

NOTES
1) Unbalanced roof live loads have been considered for this design.
2) Wind: ASCE 7-16; Vult=120mph (3-second gust) Vasd=95mph; TCDL=6.0psf; BCDL=6.0psf; h=25ft; Cat. II; Exp B; Enclosed; MWFRS (envelope) and C-C Exterior(2E) 0-0-0 to 3-0-0, Interior (1) 3-0-0 to 5-3-8, Exterior(2R) 5-3-8 to 8-3-8, Interior (1) 8-3-8 to 10-7-0 zone; cantilever left and right exposed ; end vertical left and right exposed;C-C for members and forces & MWFRS for reactions shown; Lumber DOL=1.60 plate grip DOL=1.60
3) TCLL: ASCE 7-16; Pr=20.0 psf (roof LL: Lum DOL=1.15 Plate DOL=1.15); Pg=20.0 psf; Pf=15.4 psf (Lum DOL = 1.15 Plate DOL = 1.15); Is=1.0; Rough Cat B; Partially Exp.; Ce=1.0; Cs=1.00; Ct=1.10
4) Unbalanced snow loads have been considered for this design.
5) Plates checked for a plus or minus 5 degree rotation about its center.
6) This truss has been designed for a 10.0 psf bottom chord live load nonconcurrent with any other live loads.
7) * This truss has been designed for a live load of 20.0psf on the bottom chord in all areas where a rectangle 3-06-00 tall by 2-00-00 wide will fit between the bottom chord and any other members.
8) This truss has been designed for a moving concentrated load of 250.0lb live and 3.0lb dead located at all mid panels and at all panel points along the Top Chord and Bottom Chord, nonconcurrent with any other live loads.
9) This truss design requires that a minimum of 7/16" structural wood sheathing be applied directly to the top chord and 1/2" gypsum sheetrock be applied directly to the bottom chord.

LOAD CASE(S) Standard

May 28,2025

WARNING - Verify design parameters and READ NOTES ON THIS AND INCLUDED MITEK REFERENCE PAGE MII-7473 rev. 1/2/2023 BEFORE USE.
Design valid for use only with MiTek® connectors. This design is based only upon parameters shown, and is for an individual building component, not a truss system. Before use, the building designer must verify the applicability of design parameters and properly incorporate this design into the overall building design. Bracing indicated is to prevent buckling of individual truss web and/or chord members only. Additional temporary and permanent bracing is always required for stability and to prevent collapse with possible personal injury and property damage. For general guidance regarding the fabrication, storage, delivery, erection and bracing of trusses and truss systems, see **ANSI/TPI1 Quality Criteria and DSB-22** available from Truss Plate Institute (www.tpinst.org) and **BCSI Building Component Safety Information** available from the Structural Building Component Association (www.sbcacomponents.com)

ENGINEERING BY TRENCO A MiTek Affiliate
818 Soundside Road
Edenton, NC 27932

Job	Truss	Truss Type	Qty	Ply	Elmhurst Rev 3-Elev 5-Roof
	V7	Valley	1	1	I73750795 Job Reference (optional)

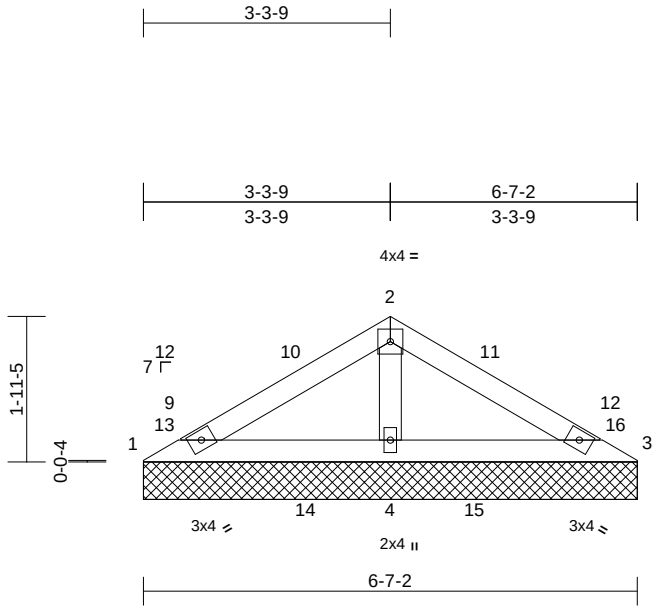

Scale = 1:30.8

Loading	(psf)	Spacing	2-0-0	CSI		DEFL	in	(loc)	l/defl	L/d	PLATES	GRIP
TCLL (roof)	20.0	Plate Grip DOL	1.15	TC	0.34	Vert(LL)	n/a	-	n/a	999	MT20	244/190
Snow (Pf/Pg)	15.4/20.0	Lumber DOL	1.15	BC	0.44	Vert(TL)	n/a	-	n/a	999		
TCDL	10.0	Rep Stress Incr	YES	WB	0.07	Horiz(TL)	0.00	4	n/a	n/a		
BCLL	0.0*	Code	IRC2021/TPI2014	Matrix-AS								
BCDL	10.0										Weight: 21 lb	FT = 20%

LUMBER
TOP CHORD 2x4 SP No.2
BOT CHORD 2x4 SP No.3
OTHERS 2x4 SP No.3

BRACING
TOP CHORD Structural wood sheathing directly applied.
BOT CHORD Rigid ceiling directly applied.

REACTIONS (size) 1=6-7-2, 3=6-7-2, 4=6-7-2
Max Horiz 1=-28 (LC 12)
Max Uplift 1=-32 (LC 50), 3=-32 (LC 48)
Max Grav 1=279 (LC 47), 3=279 (LC 51), 4=474 (LC 44)

FORCES (lb) - Maximum Compression/Maximum Tension
TOP CHORD 1-2=-231/232, 2-3=-231/232
BOT CHORD 1-4=-164/186, 3-4=-164/186
WEBS 2-4=-352/107

NOTES
1) Unbalanced roof live loads have been considered for this design.
2) Wind: ASCE 7-16; Vult=120mph (3-second gust) Vasd=95mph; TCDL=6.0psf; BCDL=6.0psf; h=25ft; Cat. II; Exp B; Enclosed; MWFRS (envelope) and C-C Exterior(2E) zone; cantilever left and right exposed ; end vertical left and right exposed;C-C for members and forces & MWFRS for reactions shown; Lumber DOL=1.60 plate grip DOL=1.60
3) Truss designed for wind loads in the plane of the truss only. For studs exposed to wind (normal to the face), see Standard Industry Gable End Details as applicable, or consult qualified building designer as per ANSI/TPI 1.
4) TCLL: ASCE 7-16; Pr=20.0 psf (roof LL: Lum DOL=1.15 Plate DOL=1.15); Pg=20.0 psf; Pf=15.4 psf (Lum DOL = 1.15 Plate DOL = 1.15); Is=1.0; Rough Cat B; Partially Exp.; Ce=1.0; Cs=1.00; Ct=1.10
5) Unbalanced snow loads have been considered for this design.
6) Plates checked for a plus or minus 5 degree rotation about its center.
7) Gable requires continuous bottom chord bearing.
8) Gable studs spaced at 4-0-0 oc.
9) This truss has been designed for a 10.0 psf bottom chord live load nonconcurrent with any other live loads.
10) * This truss has been designed for a live load of 20.0psf on the bottom chord in all areas where a rectangle 3-06-00 tall by 2-00-00 wide will fit between the bottom chord and any other members.
11) Provide mechanical connection (by others) of truss to bearing plate capable of withstanding 32 lb uplift at joint 1 and 32 lb uplift at joint 3.
12) This truss has been designed for a moving concentrated load of 250.0lb live and 3.0lb dead located at all mid panels and at all panel points along the Top Chord and Bottom Chord, nonconcurrent with any other live loads.
13) This truss design requires that a minimum of 7/16" structural wood sheathing be applied directly to the top chord and 1/2" gypsum sheetrock be applied directly to the bottom chord.

LOAD CASE(S) Standard

May 28,2025

WARNING - Verify design parameters and READ NOTES ON THIS AND INCLUDED MITEK REFERENCE PAGE MII-7473 rev. 1/2/2023 BEFORE USE.
Design valid for use only with MiTek® connectors. This design is based only upon parameters shown, and is for an individual building component, not a truss system. Before use, the building designer must verify the applicability of design parameters and properly incorporate this design into the overall building design. Bracing indicated is to prevent buckling of individual truss web and/or chord members only. Additional temporary and permanent bracing is always required for stability and to prevent collapse with possible personal injury and property damage. For general guidance regarding the fabrication, storage, delivery, erection and bracing of trusses and truss systems, see **ANSI/TPI1 Quality Criteria and DSB-22** available from Truss Plate Institute (www.tpinst.org) and **BCSI Building Component Safety Information** available from the Structural Building Component Association (www.sbcacomponents.com)

ENGINEERING BY TRENCO A MiTek Affiliate
818 Soundside Road
Edenton, NC 27932

Symbols

PLATE LOCATION AND ORIENTATION

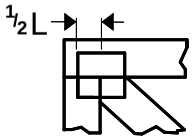

Center plate on joint unless x, y offsets are indicated. Dimensions are in ft-in-sixteenths. Apply plates to both sides of truss and fully embed teeth.

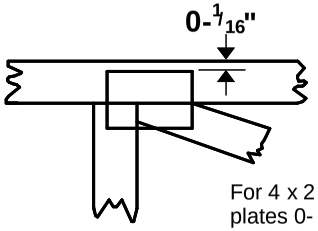

For 4 x 2 orientation, locate plates 0- 1/16" from outside edge of truss.

This symbol indicates the required direction of slots in connector plates.

* Plate location details available in MiTek software or upon request.

PLATE SIZE

4 x 4

The first dimension is the plate width measured perpendicular to slots. Second dimension is the length parallel to slots.

LATERAL BRACING LOCATION

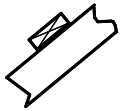

Indicated by symbol shown and/or by text in the bracing section of the output. Use T or I bracing if indicated.

BEARING

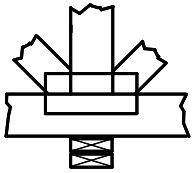

Indicates location where bearings (supports) occur. Icons vary but reaction section indicates joint number/letter where bearings occur. Min size shown is for crushing only.

Industry Standards:

ANSI/TPI1: National Design Specification for Metal Plate Connected Wood Truss Construction.
DSB-22: Design Standard for Bracing.
BCSI: Building Component Safety Information, Guide to Good Practice for Handling, Installing, Restraining & Bracing of Metal Plate Connected Wood Trusses.

Numbering System

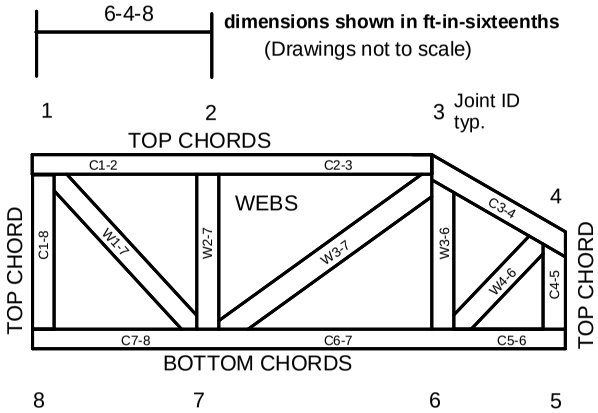

JOINTS ARE GENERALLY NUMBERED/LETTERED CLOCKWISE AROUND THE TRUSS STARTING AT THE JOINT FARTHEST TO THE LEFT.

CHORDS AND WEBS ARE IDENTIFIED BY END JOINT NUMBERS/LETTERS.

Product Code Approvals

ICC-ES Reports:

ESR-1988, ESR-2362, ESR-2685, ESR-3282
ESR-4722, ESL-1388

Design General Notes

Trusses are designed for wind loads in the plane of the truss unless otherwise shown.

Lumber design values are in accordance with ANSI/TPI 1 section 6.3 These truss designs rely on lumber values established by others.

© 2023 MiTek® All Rights Reserved

MiTek®

ENGINEERING BY TRENCO
A MiTek Affiliate

General Safety Notes

Failure to Follow Could Cause Property Damage or Personal Injury

1. Additional stability bracing for truss system, e.g. diagonal or X-bracing, is always required. See BCSI.
2. Truss bracing must be designed by an engineer. For wide truss spacing, individual lateral braces themselves may require bracing, or alternative Tor I bracing should be considered.
3. Never exceed the design loading shown and never stack materials on inadequately braced trusses.
4. Provide copies of this truss design to the building designer, erection supervisor, property owner and all other interested parties.
5. Cut members to bear tightly against each other.
6. Place plates on each face of truss at each joint and embed fully. Knots and wane at joint locations are regulated by ANSI/TPI 1.
7. Design assumes trusses will be suitably protected from the environment in accord with ANSI/TPI 1.
8. Unless otherwise noted, moisture content of lumber shall not exceed 19% at time of fabrication.
9. Unless expressly noted, this design is not applicable for use with fire retardant, preservative treated, or green lumber.
10. Camber is a non-structural consideration and is the responsibility of truss fabricator. General practice is to camber for dead load deflection.
11. Plate type, size, orientation and location dimensions indicated are minimum plating requirements.
12. Lumber used shall be of the species and size, and in all respects, equal to or better than that specified.
13. Top chords must be sheathed or purlins provided at spacing indicated on design.
14. Bottom chords require lateral bracing at 10 ft. spacing, or less, if no ceiling is installed, unless otherwise noted.
15. Connections not shown are the responsibility of others.
16. Do not cut or alter truss member or plate without prior approval of an engineer.
17. Install and load vertically unless indicated otherwise.
18. Use of green or treated lumber may pose unacceptable environmental, health or performance risks. Consult with project engineer before use.
19. Review all portions of this design (front, back, words and pictures) before use. Reviewing pictures alone is not sufficient.
20. Design assumes manufacture in accordance with ANSI/TPI 1 Quality Criteria.
21. The design does not take into account any dynamic or other loads other than those expressly stated.