Mitchell Environmental, P.A.

SEPTIC SYSTEM DESIGN

for

MAGNOLIA ACRES SUBDIVISION- LOT 36

Fuquay-Varina, Harnett County, North Carolina

Submitted to:
Harnett County Health Department
307 Cornelius Harnett Blvd.
Lillington, NC 27546

Prepared for:
HHHunt Homes
1 Fenton Main Street
Suite 280
Cary, North Carolina 27511

Prepared by:
Adam Aycock, EI

DATE: May 22, 2025
PROJECT NO.: 1823

1501 Lakestone Village Lane, Suite 205
Fuquay-Varina, North Carolina 27526
919-669-0329

Harnett County GIS

PID: 050633 0112 58

PIN: 0633-04-5195.000

Account Number: 1500061907

Owner: HHHUNT LOT ACQUISTIONS LLC

Mailing Address: 11237 NUCKOLS RD GLEN ALLEN, VA 23059-5502

Physical Address: 120 WHITE MAGNOLIA LN FUQUAY-VARINA, NC 27526 ac

Description: LOT#36 MAGNOLIA ACRES S/D MAP#2023-591

Surveyed/Deeded Acreage: 0.86

Calculated Acreage: 0.86

Deed Date:

Deed Book/Page: 4223 - 0821

Plat(Survey) Book/Page: 2023 - 591

Last Sale: 2024 - 2

Sale Price: $3349500

Qualified Code: A

Vacant or Improved: V

Transfer of Split: T

Actual Year Built:

Heated Area : SqFt

Building Count : 0

Building Value: $0

Parcel Outbuilding Value: $0

Parcel Land Value: 29410

Market Value: $29410

Deferred Value: $0

Total Assessed Value: $29410

Zoning: RA-30 - 0.86 acres (100.0%)

Zoning Jurisdiction: Harnett County

Wetlands: No

FEMA Flood: Minimal Flood Risk

Within 1mi of Agriculture District: Yes

Elementary School: Northwest Harnett Elementary

Middle School: Harnett Central Middle

High School: Harnett Central High

Fire Department: Northwest Harnett

EMS Department: Medic 14

Law Enforcement: Harnett County Sheriff

Voter Precinct: Northwest Harnett

County Commissioner : Duncan Edward Jaggers

School Board Member: John Hairr

PRESSURE MANIFOLD DESIGN

Name: HHHunt Homes **P.I.N. #:** 0633-04-5195 **D #:** N/A

Address: 120 White Magnolia Lane **Subdiv:** Magnolia Acres **Lot#:** 36

# of BDR: 4 **Daily Flow:** 480 **gal/day** **L.T.A.R.:** 0.300 **gal/day/sq.ft**

Septic Tank: 1000 **gals (min.)** **Pump Tank:** 1000 **gals (min.)** **Sq. Foot:** 1230 **Stone Depth:** N/A (EZ Flow)

Number of Taps: 5 **Length of Trenches:** Varies **ft(See Tap Chart for Details)**

Depth of Trenches: see Harnett County permit **Manifold Length:** 48 **in**

Manifold Diameter: 4 in sch 80pvc (minimum) **Tap Configuration: 6 in spacing** 1 **side(s) of manifold**

Supply Line: length: 125 **ft** **Diameter:** 2 **in sch 40pvc**

Friction Loss + Fitting Loss: 5.50 **ft(supply line length + 70' for fittings in pump tank)**

Design Head: 2.0 **ft** **Elevation Head:** 8.30 **ft**

Vent Hole Size: 3/16 **in** **Orifice Coefficient of Discharge:** 0.60

Orifice Coefficient of Contraction: 0.62 **Orifice Coefficient of Velocity:** 0.97

Maximum Head Supplied by Selected Pump(s) at Total Design Flowrate: 20 **ft**

Orifice / Vent Hole Flowrate: 1.85 **gpm** **Head Loss at Orifice / Vent Hole:** 1.27 **ft**

Total Head: 17.07 **ft** **Pump to Deliver:** 37.13 **gals/min at** 17.07 **ft head**

Dosing Volume: 175.89 **gals.**

Drawdown: 175.89 **gals divided by** 18 **gals/in =** 9.77 **inches**

SJE Rhombus Installer Friendly Series simplex control panel, or equivalent, required
A septic tank filter, or equal is required.
Possible pumps: **Hydromatic:** **Goulds:** **Myers:**
Zoeller: 137 **Other:**

TAP CHART

Bench Mark	11.81	is = 100.00	set at	Eg at 36/37 front corner			**Design Head:**	2.0	
Pump tank elev.		8	103.81	**Pump elev.**	98.81		**Manifold elev.**	107.11	
line	**color**	**rod read**	**Elevation**	**length**	**hole size**	**flow/tap**	**gal/day**	**trench area**	**LINE LTAR**
1 & 2	W & R	5.70	106.11	65	1/2in SCH 80	5.48	74.56	195	0.3823
3	Blue	6.53	105.28	65	1/2in SCH 80	5.48	74.56	195	0.3823
6	Pink	7.15	104.66	85	1/2in SCH 40	7.11	96.73	255	0.3794
7	Green	7.77	104.04	85	1/2in SCH 40	7.11	96.73	255	0.3794
8	Purple	8.63	103.18	110	3/4in SCH 80	10.10	137.41	330	0.4164
		total	**feet =**	**410**	**gal/min =**	**35.3**		**LTAR =**	**0.3000**
% of Pipe Vol.		66		**Des. Flow**	480.00			**(ltar + 5%)**	0.3150
Dose Volume		175.89		**Pump Run=**	13.61			**(ltar W/ Innov.)**	0.4000
Dose Pump Time		4.99		**Tank Gal/IN**	18			**(ltar + 5%)**	0.4200
Drawdown in Inches		9.77		**Elev. Head**	8.30				
Supply Line Length		125							

Comments:

PRESSURE MANIFOLD DESIGN

Name: HHHunt Homes **P.I.N. #:** 0633-04-5195 **D #:** N/A

Address: 120 White Magnolia Lane **Subdiv:** Magnolia Acres **Lot#:** 36

# of BDR: 4 **Daily Flow:** 480 **gal/day** **L.T.A.R.:** 0.300 **gal/day/sq.ft**

Septic Tank: 1000 **gals (min.)** **Pump Tank:** 1000 **gals (min.)** **Sq. Foot:** 1215 **Stone Depth:** N/A (EZ Flow)

Number of Taps: 5 **Length of Trenches:** Varies **ft(See Tap Chart for Details)**

Depth of Trenches: see Harnett County permit **Manifold Length:** 48 **in**

Manifold Diameter: 4 in sch 80pvc (minimum) **Tap Configuration: 6 in spacing** 1 **side(s) of manifold**

Supply Line: length: 95 **ft** **Diameter:** 2 **in sch 40pvc**

Friction Loss + Fitting Loss: 3.59 **ft(supply line length + 70' for fittings in pump tank)**

Design Head: 2.0 **ft** **Elevation Head:** 9.70 **ft**

Vent Hole Size: 3/16 **in** **Orifice Coefficient of Discharge:** 0.60

Orifice Coefficient of Contraction: 0.62 **Orifice Coefficient of Velocity:** 0.97

Maximum Head Supplied by Selected Pump(s) at Total Design Flowrate: 21 **ft**

Orifice / Vent Hole Flowrate: 1.90 **gpm** **Head Loss at Orifice / Vent Hole:** 1.33 **ft**

Total Head: 16.62 **ft** **Pump to Deliver:** 32.56 **gals/min at** 16.62 **ft head**

Dosing Volume: 173.75 **gals.**

Drawdown: 173.75 **gals divided by** 18 **gals/in =** 9.65 **inches**

SJE Rhombus Installer Friendly Series simplex control panel, or equivalent, required
A septic tank filter, or equal is required.
Possible pumps: **Hydromatic:** **Goulds:** **Myers:**
Zoeller: 137 **Other:**

TAP CHART

Bench Mark	0.00	is = 100.00	set at				**Design Head:**	2.0	
Pump tank elev.		8	92.00	**Pump elev.**	87.00		**Manifold elev.**	96.70	
line	**color**	**rod read**	**Elevation**	**length**	**hole size**	**flow/tap**	**gal/day**	**trench area**	**LINE LTAR**
9	Red	4.30	95.70	90	1/2in SCH 40	7.11	111.31	270	0.4123
10	Pink	5.77	94.23	90	1/2in SCH 40	7.11	111.31	270	0.4123
11	Red	6.65	93.35	75	1/2in SCH 80	5.48	85.79	225	0.3813
12	Pink	7.50	92.50	75	1/2in SCH 80	5.48	85.79	225	0.3813
13 & 14	B & Y	8.48	91.52	75	1/2in SCH 80	5.48	85.79	225	0.3813
		total	**feet =**	**405**	**gal/min =**	**30.7**		**LTAR =**	**0.3000**
% of Pipe Vol.		66		**Des. Flow**	480.00			**(ltar + 5%)**	0.3150
Dose Volume		173.75		**Pump Run=**	15.66			**(ltar W/ Innov.)**	0.4000
Dose Pump Time		5.67		**Tank Gal/IN**	18			**(ltar + 5%)**	0.4200
Drawdown in Inches		9.65		**Elev. Head**	9.70				
Supply Line Length		95							

Comments:

STB - 345 - Top Seam

Approval Date: 12 - 09 - 99

Liquid Capacity 1007 Gallons

Non Traffic Rated

Reinforcing Schedule: # 3 Grade 60 Rebar

4500 PSI Concrete w/ State Approved Structural Fiber

Est. Weight: 8,200 lbs.

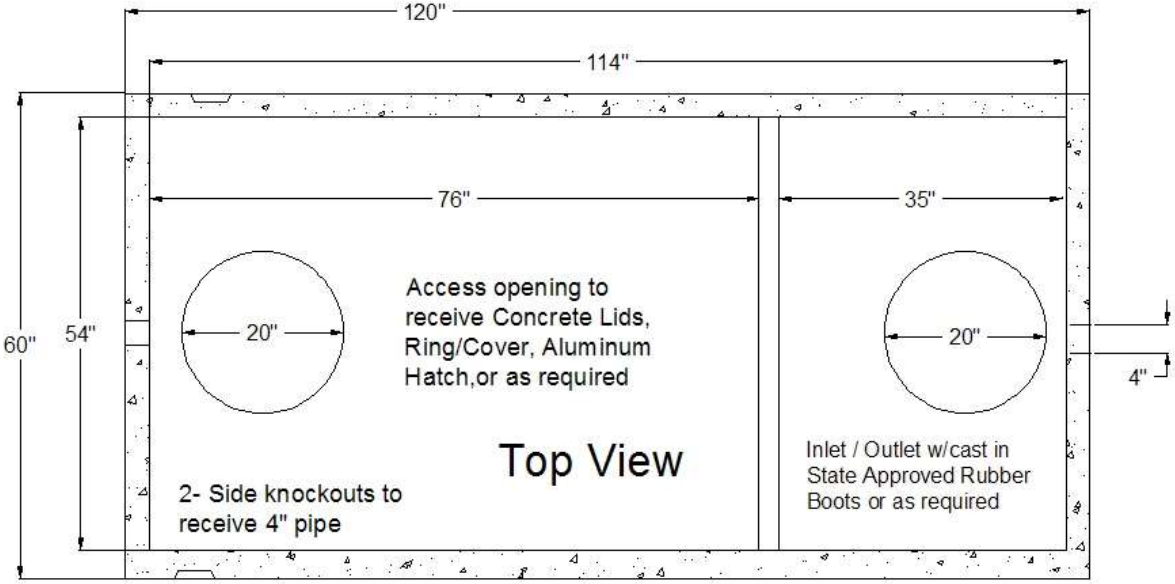

Manufactured By:

GARNERS Septic Tanks, Inc.
Eddie Garner, *President*
919-718-5181
121 Stanton Hill Road
Carthage, NC 28327
Fax 919-775-2229
Eddie@garnersseptictanks.com

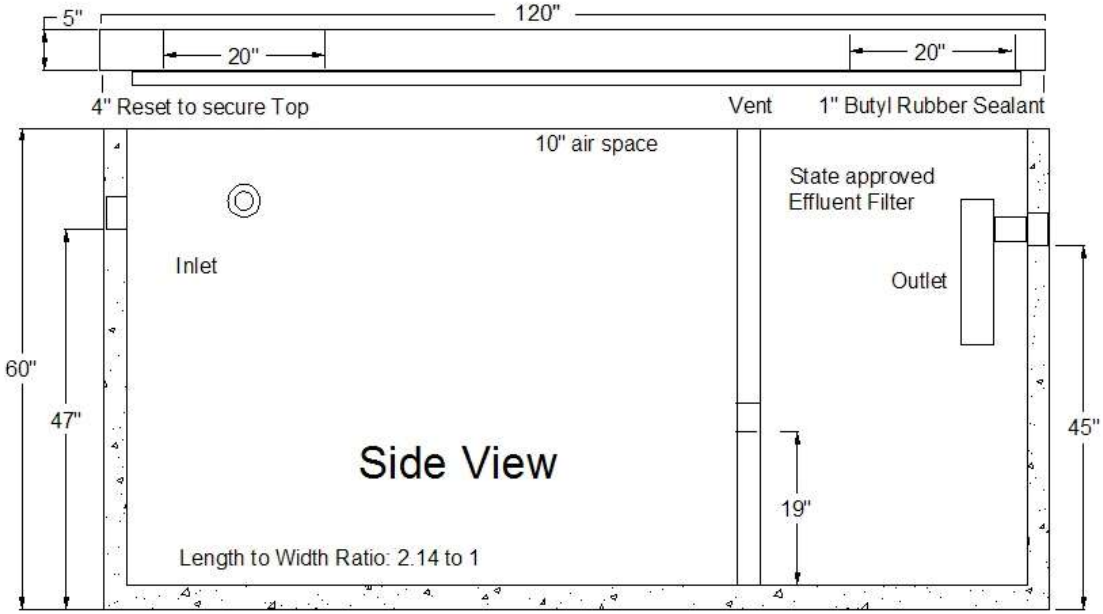

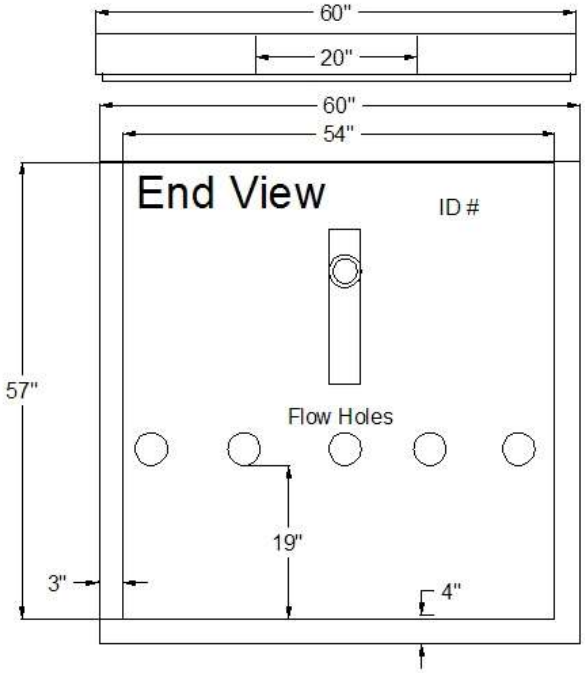

PL-68 Filter and Tee

PL-68 is much more than just an effluent filter. The housing can also be used as an inlet baffle (tee) or an outlet baffle. The housing is designed to accept Polylok's snap in gas deflector to deflect gas bubbles away from the tee and to keep the solids in the tank.

Features:

- Offers 68 linear feet of 1/16″ filter slots, which significantly extends time between cleaning.
- Accepts 3/4″ PVC handle.
- Locks in any 360° position when used with PL-68 Tee.
- PL-68 Housing can be used as an inlet or outlet tee.
- Gasket prevents bypass.

PL-68 Installation:

Ideal for residential waste flows up to 800 gallons per day (GPD). Easily installs in any new or existing 4" outlet tee.

1. Locate the outlet of the septic tank.
2. Remove the tank cover and pump tank if necessary.
3. Glue the filter housing to the outlet pipe, or use a Polylok Extend & Lok if not enough pipe exists.
4. Insert the PL-68 filter into tee.
5. Replace and secure the septic tank cover.

PL-68 Maintenance:

The PL-68 Effluent Filter will operate efficiently for several years under normal conditions before requiring cleaning. It is recommended that the filter be cleaned every time the tank is pumped, or at least every three years.

1. Do not use plumbing when filter is removed.
2. Pull PL-68 out of the tee.
3. Hose off filter over the septic tank. Make sure all solids fall back into septic tank.
4. Insert filter back into tee/housing.

Related Products:

PL-68 Filter Concrete Baffle
Extend & Lok™

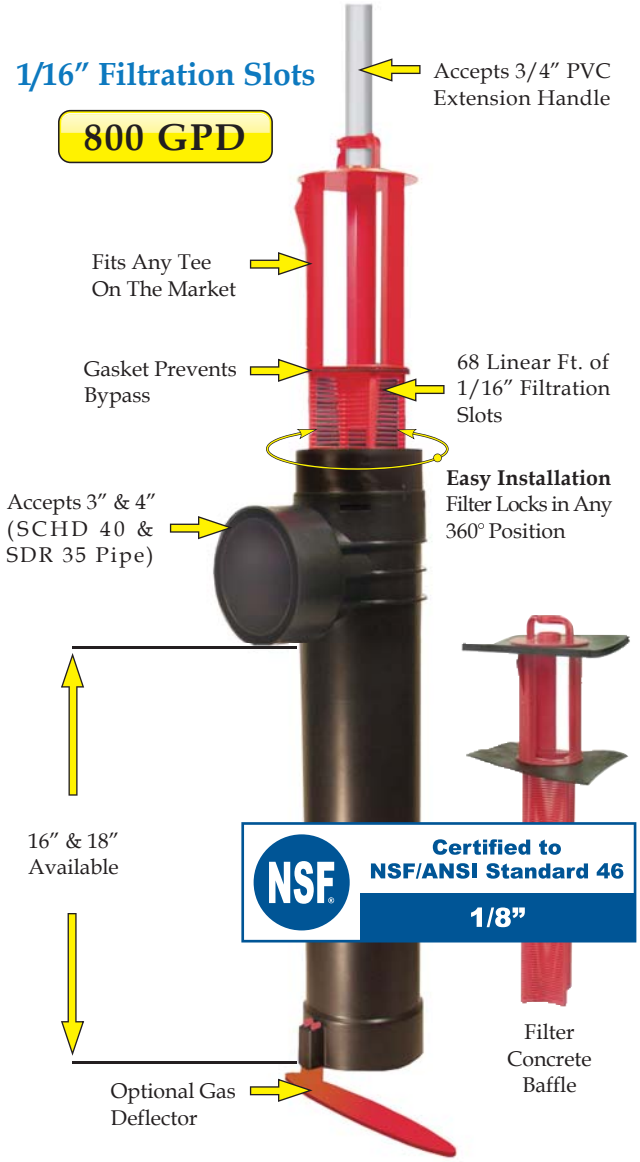

Extend & Lok™
Easily installs into existing tanks.

Spacer Bushing 4″ SCHD 40 to SDR 35

Spacer Bushing 4″ SCHD 40 to 110mm Pipe

2″ Extender

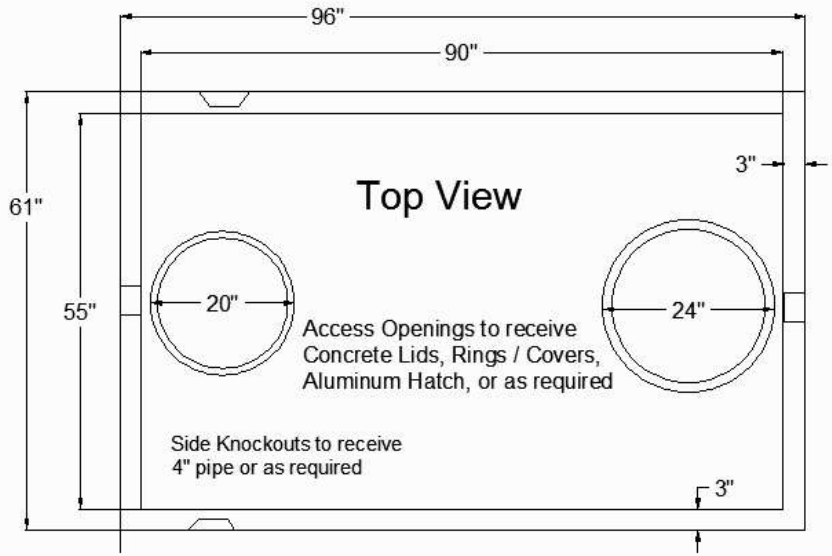

PT - 214

Date: 12-16-93
Non Traffic Rated
Liquid Capacity 1,028 Gallons
18 gals. per inch
Reinforcing Schedule: # 3 Grade 60 Rebar
4500 PSI Concrete w/ State Approved Structural Fiber
2 yds. Est Weight 8200 lbs

Manufactured By:

GARNERS
Septic Tanks, Inc.
Eddie Garner, *President*
919-718-5181
121 Stanton Hill Road
Carthage, NC 28327
Fax 919-775-2229
Eddie@garnersseptictanks.com

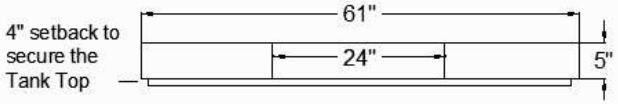

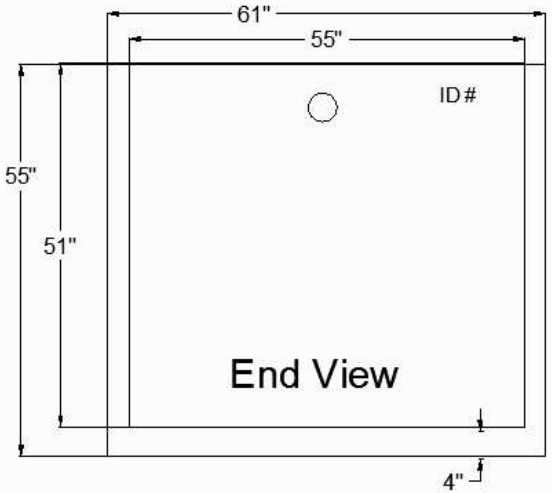

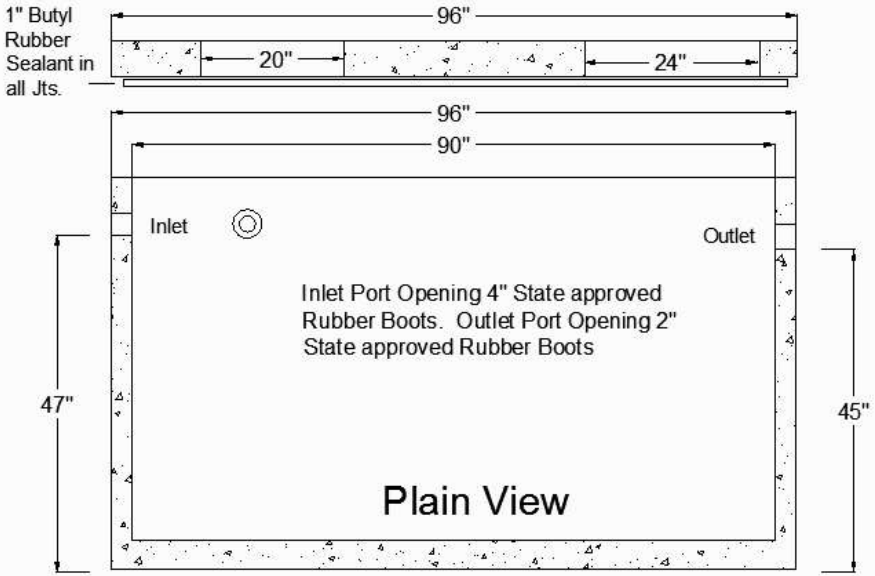

INSTALLER FRIENDLY SERIES® - IFS Single Phase Simplex (Demand/TD)

Single phase, simplex demand dose or timed dose, float controlled system for pump control and system monitoring.

The IFS simplex control panel is designed to control one 120, 208, 240 VAC single phase pump in water and sewage installations.

The IFS control panel features an easy-to-use touch pad with display on the inner door for programming and system monitoring.

The panel configuration can be easily converted in the field to either a timed dose or demand dose.

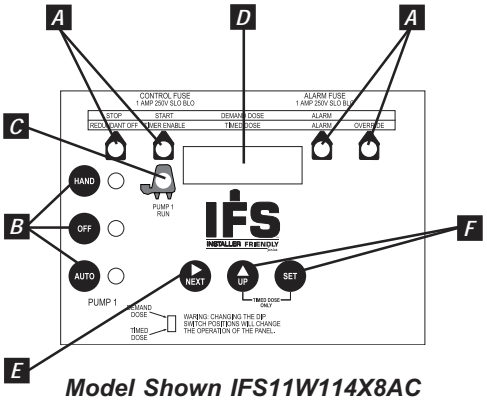

Model Shown IFS11W114X8AC
(Inner door view)

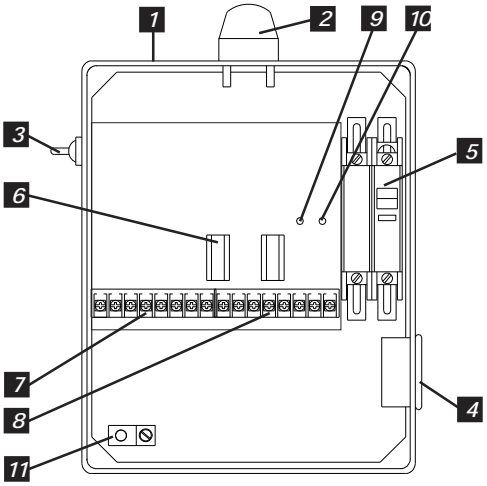

Model Shown IFS11W114X8AC
(Inside view)

TOUCH PAD FEATURES

A. **Float Indicators** illuminate when floats are activated. Alarm will activate if a float operates out of sequence.

B. **HOA (Hand-Off-Automatic) Buttons** control pump mode with indication. Hand mode defaults to Automatic when stop level or redundant off level is reached.

C. **Pump Run Indicator** illuminates when pump is called to run.

D. **LED Display** shows system information including: mode, pump elapsed time (hh:mm), events (cycles), alarm counter, float error count, timed dose override counter (timed dose only), and ON/OFF times (timed dose only).

E. **NEXT Push Button** toggles display.

F. **UP and SET Push Buttons** set pump ON/OFF times (timed dose only).

PANEL COMPONENTS

1. **Enclosure** base measures 10 X 8 X 4 inches (25.4 X 20.32 X 10.16 cm). NEMA 4X (ultraviolet stabilized thermoplastic with removable mounting feet for outdoor or indoor use). **Note:** Options, voltage, and amp range selected may change enclosure size and component layout.
2. **Red Alarm Beacon** provides 360° visual check of alarm condition.
3. **Exterior Alarm Test/Normal/Silence Switch** allows horn and light to be tested and horn to be silenced in an alarm condition. Alarm automatically resets once alarm condition is cleared.
4. **Alarm Horn** provides audio warning of alarm condition (83 to 85 decibel rating).
5. **Circuit Breaker** (optional) provides pump disconnect and branch circuit protection.
6. **Power Relay** controls pump by switching electrical lines. Definate purpose contactor used when pump full load amps are above 15.
7. **Float Connection Terminal Block**
8. **Incoming Control/Alarm Power & Pump Terminal Block**
9. **Control Power Indicator/Fuse** indicator light illuminates if control power is present in panel. Alarm will activate if control fuse is blown.
10. **Alarm Power Indicator/Fuse** indicator light illuminates if alarm power is present in panel.
11. **Ground Lug**

NOTE: Schematic/Wiring Diagram and Pump Specification Label are located inside the panel on enclosure cover

Reg. Cdn Pat. & TM Off

FEATURES

- Entire control system (panel and switches) is UL Listed to meet and/or exceed industry safety standards
- Dual safety certification for the United States and Canada
- Standard package includes:
  Demand Dose - three 20' SJE MilliAmpMaster™ control switches
  Timed Dose - two 20' SJE MilliAmpMaster™ control switches
- Complete with step-by-step installation instructions
- Three-year limited warranty

c UL us LISTED

SJE Rhombus®

PO Box 1708, Detroit Lakes, MN 56502
1-888-DIAL-SJE • 1-218-847-1317
1-218-847-4617 Fax
email: sje@sjerhombus.com
www.sjerhombus.com

SEE BACKSIDE FOR COMPLETE LISTING OF AVAILABLE OPTIONS.

IFS	2	1	W	Note	Note	4	H	8AC, 10E, 10F	15A

MODEL IFS

MODEL TYPE
- [ ] 1 = SPLX TIMED DOSE (includes option 8AC standard)
- [X] 2 = SPLX DEMAND DOSE (includes option 8AC standard)

ALARM PACKAGE
- [✔] 1 = alarm package (includes test/normal/silence switch, fuse, red light & horn)

ENCLOSURE RATING
- [✔] W = NEMA 4X

STARTING DEVICE
- [ ] 1 = 120/208/240 VAC
- [ ] 9 = 120 VAC

PUMP FULL LOAD AMPS
- [ ] 0 = 0-7 FLA
- [ ] 1 = 7-15 FLA
- [ ] 2 = 15-20 FLA

PUMP DISCONNECTS
- [ ] 0 = no pump disconnect
- [X] 4 = circuit breaker
  - 120 VAC (must select starting device option 9)
  - 120/208/240 VAC (must select starting device option 1)

SWITCH APPLICATIONS
- [X] H = floats (Timed dose = low level and alarm / Demand dose = stop, start, and alarm) (select 17 option)
- [ ] X = no float
  - timed dose
  - demand Dose

Note: Pump down applications only.

OPTIONS *Listed below*

Note: Starting device, pump full load amps, cord length, and float type to be selected by installer and their electrician upon selection of pump.

If additional features are required, call the factory for a quote on an Engineered Custom control panel.

	CODE	DESCRIPTION
[ ]	1J	Duo alarm inputs
[ ]	3A	Alarm flasher
[ ]	3B	Manual reset alarm
[ ]	4A	Redundant off *(select option 4D if floats are required)* Demand Dose Timed Dose
[ ]	4D	Redundant off float
[ ]	6A	Auxiliary alarm contacts, form C
[✔]	8AC	Display board includes: ETM counter, events (cycles) counter, alarm counter, and override counter (timed dose only). ***(Included as standard.)***
[X]	10E	Lockable latch - NEMA 4X
[X]	10F	Lightning arrestor *(must select pump circuit breaker, control and alarm power combined)*
[ ]	10K	Anti-condensation heater
[ ]	11C	NEMA 1 remote alarm panel *(must select option 6A)*

	CODE	DESCRIPTION
[ ]	11D	NEMA 4X remote alarm panel *(must select option 6A)*
[X]	15A	Control / Alarm circuit breaker
[ ]	16A	10' cord in lieu of 20' *(per float)*
[ ]	16B	15' cord in lieu of 20' *(per float)*
[ ]	16C	30' cord in lieu of 20' *(per float)*
[ ]	16D	40' cord in lieu of 20' *(per float)*
[ ]	17C	Sensor Float® / internally weighted ▲ *(per float)*
[ ]	17D	Sensor Float® / externally weighted ▲ *(per float)*
[ ]	17G	MilliAmpMaster™/ pipe clamp ● *(per float)*
[ ]	17H	MilliAmpMaster™/ externally weighted ● *(per float)*
[ ]	17J	Sensor Float® / pipe clamp ▲ *(per float)*
[ ]	18A	Timer override option with float (timed dose only)

● Mechanically-activated ▲ Mercury-activated

SAMPLE

MODEL IFS | 1 | 1 | W | 9 | 1 | 4 | H | 8AC 10E17G

- **Model Type**
- **Alarm Package**
- **Enclosure Rating**
- **Starting Device**
- **Pump Full Load Amps**
- **Pump Disconnects**
- **Switch Application**
- **Options: Display, Lockable Latch, SJE MilliAmpMaster™/pipe clamp**

© SJE-Rhombus 02/09

Trusted. Tested. Tough.™

Product information presented here reflects conditions at time of publication. Consult factory regarding discrepancies or inconsistencies.

ZOELLER® PUMP COMPANY

SECTION: 2.15.060
FM2782
1016
Supersedes
0916

TECHNICAL DATA SHEET
FLOW-MATE SERIES
Models 137, 139 Effluent / Dewatering Pumps

PRODUCT SPECIFICATIONS

MOTOR	Horse Power	1/2
	Voltage	115 - 460
	Phase	1 or 3 Ph
	Hertz	60 Hz
	RPM	1750
	Type	Split phase or 3 phase
	Insulation	Class B
	Amps	1.4 - 10.7
PUMP	Operation	Automatic or nonautomatic
	Auto On/Off Points	10" (25.4 cm) / 2-3/4" (7 cm)
	Discharge Size	1-1/2" NPT
	Solids Handling	5/8" (15 mm) spherical solids
	Cord Length	10' (3 m) automatic, 15' (5 m) nonautomatic
	Cord Type	UL listed, neoprene cord
	Max. Head	26' (8 m)
	Max. Flow Rate	93 GPM (352 LPM)
	Max. Operating Temp.	130° F (54° C) [extra duty 140°F (60°C)]
	Cooling	Oil filled
	Motor Protection	Auto reset thermal overload (1 Ph)
MATERIALS	Motor Housing	Cast iron (137) or bronze (139)
	Pump Housing	Cast iron (137) or bronze (139)
	Base	Cast iron (137) or bronze (139)
	Upper Bearing	Sleeve bearing
	Lower Bearing	Sleeve bearing
	Mechanical Seals	Carbon and ceramic
	Impeller Type	Non-clogging vortex
	Impeller	Cast iron or bronze
	Hardware	Stainless steel
	Motor Shaft	AISI 1215 cold rolled steel
	Gasket	Neoprene

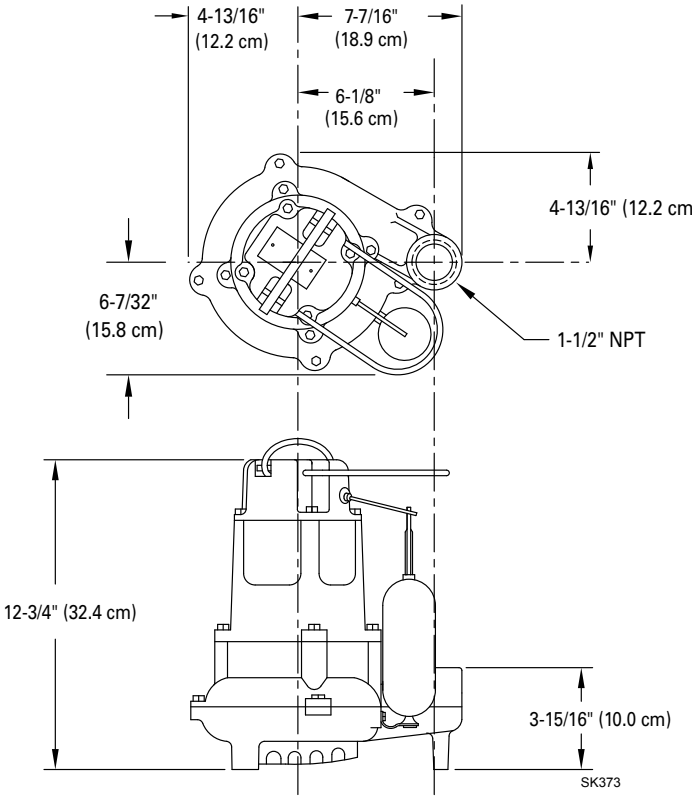

NOTE: See model comparison chart for specific details.

Tested to Standard UL778 and Certified to CSA Standard C22.2 No. 108

© Copyright 2016 Zoeller® Co. All rights reserved.
502-778-2731 | 800-928-7867 | 3649 Cane Run Road | Louisville, KY 40211-1961 | www.zoeller.com

TOTAL DYNAMIC HEAD FLOW PER MINUTE

MODEL		137/139	
Feet	Meters	Gal.	Liters
5	1.5	90	340
10	3.0	75	284
15	4.6	58	220
20	6.1	36	136
25	7.6	8	30
Shut-off Head:		26 ft.(8.0m)	

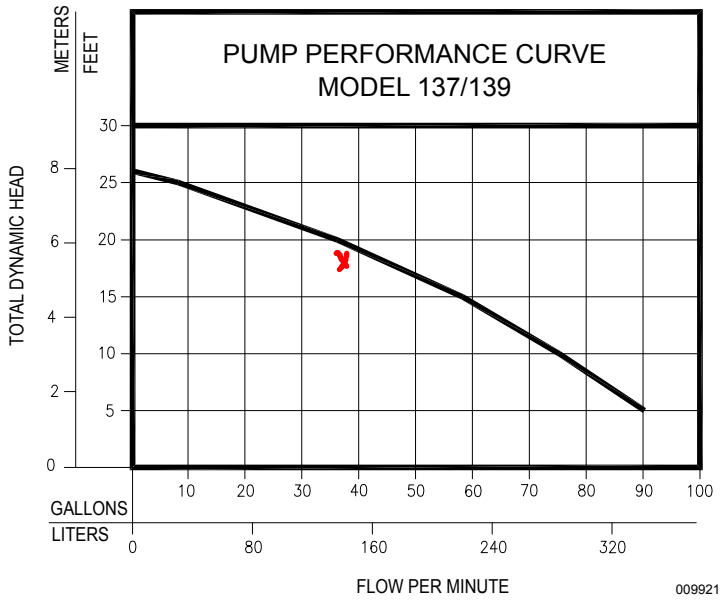

Model	MODEL COMPARISON											CERTIFICATIONS	
	Seal	Mode	Volts	Ph	Amps	HP	Hz	Lbs	Kg	Simplex	Duplex	CSA	UL
M137	Single	Auto	115	1	10.7	1/2	60	47	21	1	4	Y	Y
N137	Single	Non	115	1	10.7	1/2	60	46	21	2 or 3	2 or 4	Y	Y
BN137	Single	Auto	115	1	10.7	1/2	60	48	22	**	4	Y	Y
D137	Single	Auto	230	1	5.8	1/2	60	47	21	1	4	Y	Y
E137	Single	Non	230	1	5.8	1/2	60	48	22	2 or 3	4	Y	Y
* H137	Single	Auto	200	1	6.2	1/2	60	48	22	1	4	Y	N
* I137	Single	Non	200	1	6.2	1/2	60	48	22	3	4	Y	N
* J137	Single	Non	200	3	2.6	1/2	60	46	21	3	4	Y	Y
* F137	Single	Non	230	3	2.6	1/2	60	48	22	3	4	Y	Y
* G137	Single	Non	460	3	1.4	1/2	60	48	22	3	4	N	N
BE137	Single	Auto	230	1	5.8	1/2	60	48	22	**	---	Y	Y
M139	Single	Auto	115	1	10.7	1/2	60	51	23	1	4	Y	Y
N139	Single	Non	115	1	10.7	1/2	60	51	23	2 or 3	2 or 4	Y	Y
D139	Single	Auto	230	1	5.8	1/2	60	47	21	1	4	Y	Y
E139	Single	Non	230	1	5.8	1/2	60	48	22	2 or 3	4	Y	Y
*H139	Single	Auto	200	1	6.2	1/2	60	48	22	1	4	Y	N
*I139	Single	Non	200	1	6.2	1/2	60	48	22	3	4	Y	N
*J139	Single	Non	200	3	2.6	1/2	60	50	23	3	4	Y	Y
*F139	Single	Non	230	3	2.6	1/2	60	48	22	3	4	Y	Y
*G139	Single	Non	460	3	1.4	1/2	60	48	22	3	4	N	N

* No molded plug ** Single piggyback switch included BE and BN models include a piggyback variable level pump switch.

SELECTION GUIDE

1. Integral float-operated mechanical switch, no external control required.
2. For automatic, use single piggyback variable level float switch or double piggyback variable level float switch. Refer to FM0477.
3. See FM1228 for correct model of simplex control panel.
4. See FM0712 for correct model of duplex control panel or FM1663 for a residential alternator system.

⚠ CAUTION All installation of controls, protection devices and wiring should be done by a qualified licensed electrician. All electrical and safety codes should be followed including the most recent National Electrical Code (NEC) and the Occupational Safety and Health Act (OSHA).

© Copyright 2016 Zoeller® Co. All rights reserved.
502-778-2731 | 800-928-7867 | 3649 Cane Run Road | Louisville, KY 40211-1961 | www.zoeller.com

GEOSYNTHETIC AGGREGATE TECHNOLOGY

EZflow by Infiltrator is an environmentally friendly replacement to traditional stone and pipe drainfields using an engineered geosynthetic aggregate modular design. The EZflow system is designed to improve infiltration performance by eliminating the fines associated with crushed stone, and reducing compaction and embedment associated with stone. Preassembled units include a 3” or 4” perforated pipe surrounded by aggregate and held in place with a durable high-strength netting. This product comes in easy-to-contour 5’ and 10’ lengths and in diameters of 7, 8, 9, 10, 12, 13, or 14 inches.

Lightweight expanded polystyrene construction offers structural integrity and resists compaction. Engineered flow-channels increase void space creating improved water flow and greater storage.

Compared with stone and pipe, benefits include:

- Always clean and free of fines
- Bundles are quick to install, saving costs on heavy machinery and labor
- Modular construction allows configurations to match trench dimensions for most system shapes and sizes
- Engineered for optimal storage and absorption efficiencies
- Ability to contour along sloped sites and around trees or landscaping
- Lightweight system is perfect for repairs and tight job sites
- Easily hand-carried into position reducing time and labor
- 5’ or 10’ lengths with simple snap, internal couplers
- Easier cleanup at the job site with the elimination of stone
- Manufactured from recycled materials rather than a mined natural resource
- A wide variety of diameters and configurations to meet any installation professional’s needs
- Approved in many jurisdictions with an increased efficiency rating, reducing drainfield size
- Backed by the leader in the onsite wastewater industry

INFILTRATOR®
water technologies

Bundle System Configurations: Available in 7”, 8”, 9”, 10”, 12”, 13” and 14” diameter bundles.

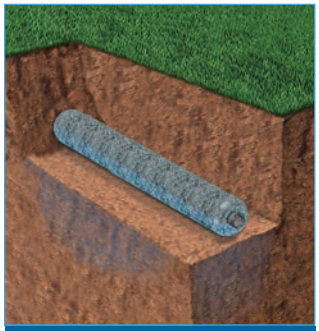

Single Bundle

0701P-GEO 1201P-GEO
0801P-GEO 1401P-GEO
1201P-GEO 1801P-GEO
1001P-GEO

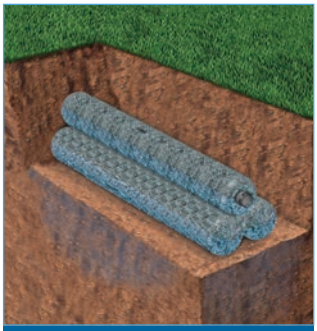

Triangular Bundle

1003T-GEO 1303T-GEO
1203T-GEO 1403T-GEO

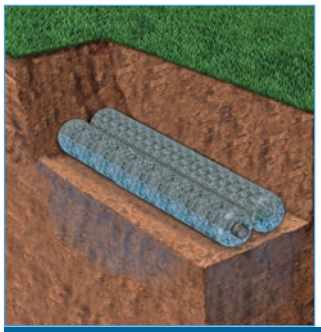

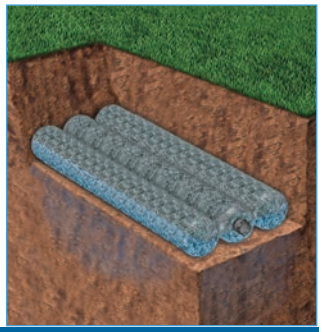

Horizontal Bundles

0705H-GEO 1303H-GEO 1206H-GEO 1402H-GEO
0904H-GEO 1202H-GEO 1303H-GEO 1802H-GEO
1002H-GEO 1203H-GEO

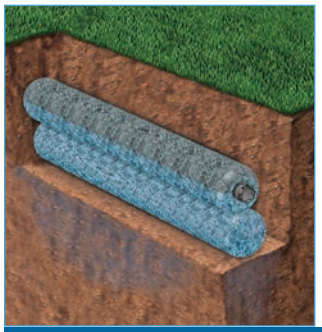

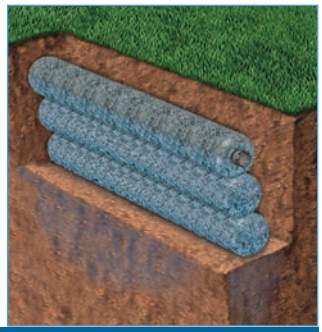

Vertical Bundles

1002V-GEO 1006V-GEO 1203V-GEO 1206V-GEO
1003V-GEO 1202V-GEO 1204V-GEO 1402V-GEO
1004V-GEO

Notes:

1. Other systems include 10” and 12” bed systems. Bed size will dictate the number of bundles.
2. System dimensions are dependent upon bundle diameter and configuration.
3. LLP is for “Low Pressure Pipe” in which a pressurized distribution pipe is field installed within the corrugated pipe.
4. Internal pipe and couplings meet the requirements of ASTM F405.
5. Bundles are also available without geotextile between the netting and synthetic aggregrate.

INFILTRATOR WATER TECHNOLOGIES STANDARD LIMITED WARRANTY

(a) The structural integrity of each EZflow by Infiltrator expanded polystyrene drainfield system and other accessories manufactured by EZflow by Infiltrator (“Units”), when installed and operated in a leachfield of an onsite septic system in accordance with Infiltrator’s instructions, is warranted to the original purchaser (“Holder”) against defective materials and workmanship for one year from the date that the septic permit is issued for the septic system containing the Units; provided, however, that if a septic permit is not required by applicable law, the warranty period will begin upon the date that installation of the septic system commences. To exercise its warranty rights, Holder must notify Infiltrator in writing at its Corporate Headquarters in Old Saybrook, Connecticut within fifteen (15) days of the alleged defect. Infiltrator will supply replacement Units for Units determined by EZflow by Infiltrator to be covered by this Limited Warranty. EZflow by Infiltrator’s liability specifically excludes the cost of removal and/or installation of the Units.

(b)THE LIMITED WARRANTY AND REMEDIES IN SUBPARAGRAPH (a) ARE EXCLUSIVE. THERE ARE NO OTHER WARRANTIES WITH RESPECT TO THE UNITS, INCLUDING NO IMPLIED WARRANTIES OF MERCHANTABILITY OR FITNESS FOR A PARTICULAR PURPOSE

(c) This Limited Warranty shall be void if any part of the EZflow system is manufactured by anyone other than EZflow by Infiltrator. The Limited Warranty does not extend to incidental, consequential, special or indirect damages. Infiltrator shall not be liable for penalties or liquidated damages, including loss of production and profits, labor and materials, overhead costs, or other losses or expenses incurred by the Holder or any third party. Specifically excluded from Limited Warranty coverage are damage to the Units due to ordinary wear and tear, alteration, accident, misuse, abuse or neglect of the Units; the Units being subjected to vehicle traffic or other conditions which are not permitted by the installation instructions; failure to maintain the minimum ground covers set forth in the installation instructions; the placement of improper materials into the system containing the Units; failure of the Units or the septic system due to improper siting or improper sizing, excessive water usage, improper grease disposal, or improper operation; or any other event not caused by Infiltrator. This Limited Warranty shall be void if the Holder fails to comply with all of the terms set forth in this Limited Warranty. Further, in no event shall Infiltrator be responsible for any loss or damage to the Holder, the Units, or any third party resulting from installation or shipment, or from any product liability claims of Holder or any third party. For this Limited Warranty to apply, the Units must be installed in accordance with all site conditions required by state and local codes; all other applicable laws; and Infiltrator’s installation instructions.

(d) No representative of Infiltrator has the authority to change or extend this Limited Warranty. No warranty applies to any party other than the original Holder.

The above represents the Standard Limited Warranty offered by Infiltrator. A limited number of states and counties have different warranty requirements. Any purchaser of Units should contact Infiltrator’s Corporate Headquarters in Old Saybrook, Connecticut, prior to such purchase, to obtain a copy of the applicable warranty, and should carefully read that warranty prior to the purchase of Units.

INFILTRATOR®
water technologies

4 Business Park Road
P.O. Box 768
Old Saybrook, CT 06475
860-577-7000 • Fax 860-577-7001
1-800-221-4436
www.infiltratorwater.com

U.S. Patents: 4,759,661; 5,017,041; 5,156,488; 5,336,017; 5,401,116; 5,401,459; 5,511,903; 5,716,163; 5,588,778; 5,839,844 Canadian Patents: 1,329,959; 2,004,564 Other patents pending. Infiltrator, Equalizer, Quick4, and SideWinder are registered trademarks of Infiltrator Water Technologies. Infiltrator is a registered trademark in France. Infiltrator Water Technologies is a registered trademark in Mexico. Contour, MicroLeaching, PolyTuff, ChamberSpacer, MultiPort, PosiLock, QuickCut, QuickPlay, SnapLock and StraightLock are trademarks of Infiltrator Water Technologies. PolyLok is a trademark of PolyLok, Inc. TUF-TITE is a registered trademark of TUF-TITE, INC. Ultra-Rib is a trademark of IPEX Inc.

© 2015 Infiltrator Water Technologies, LLC. All rights reserved. Printed in U.S.A.

EZ01 0315AG

Contact Infiltrator Water Technologies’ Technical Services Department for assistance at 1-800-221-4436

4-Bedroom
LTAR: 0.3 gpd/ft^2
Initial: Pump-to-Innovative 25% Reduction Status Product utilizing lines 1-3,6-8 (410')
Repair: Pump-to-Innovative 25% Reduction Status Product utilizing lines 9-14 (405')

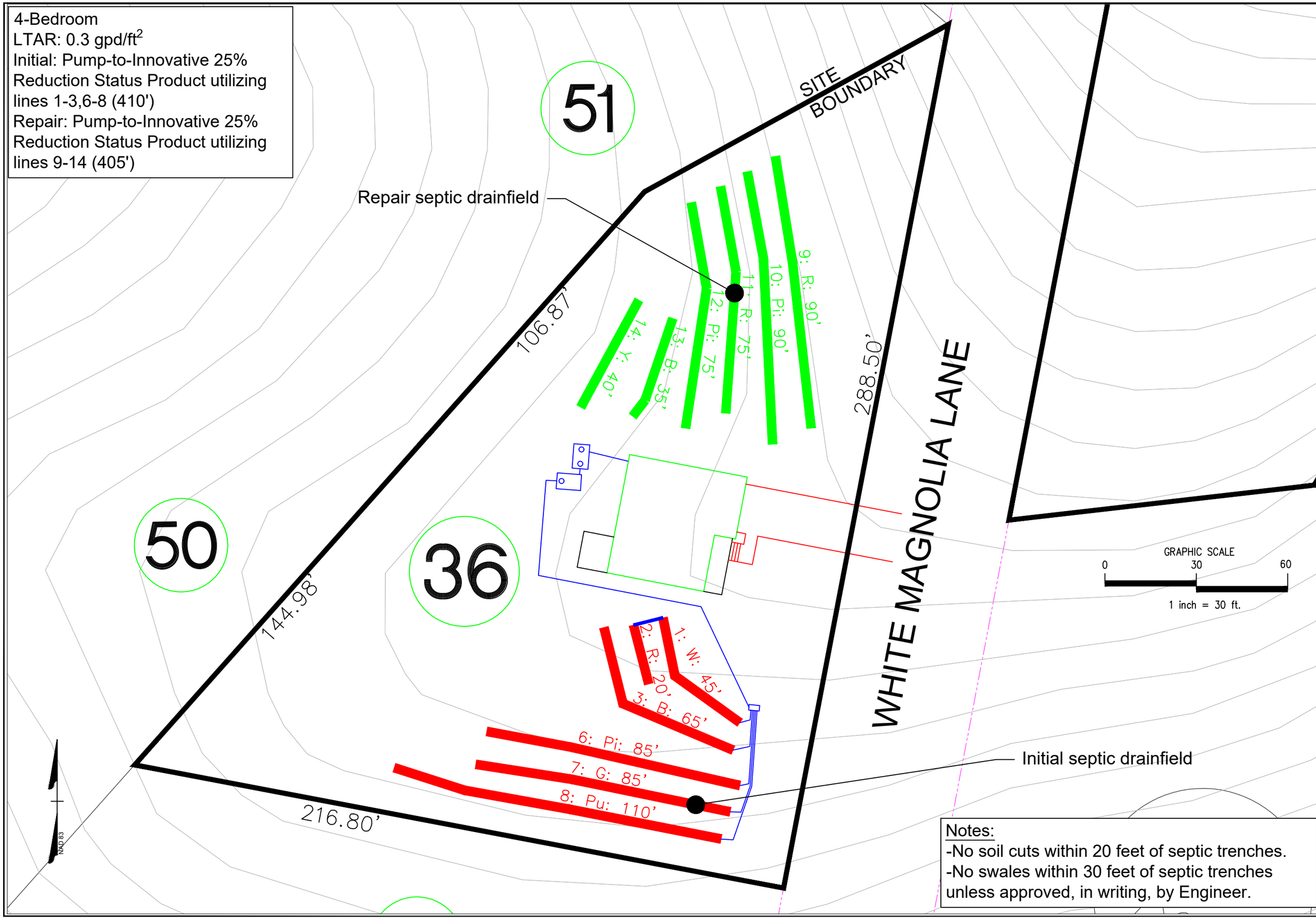

Notes:
-No soil cuts within 20 feet of septic trenches.
-No swales within 30 feet of septic trenches unless approved, in writing, by Engineer.

SHEET NUMBER
1 of 7

Magnolia Acres
Lot 36
Overall Septic

REVISION NO.	DATE
Original Submittal	May 21, 2025
Revision 1	-----
Revision 2	-----
Revision 3	-----
Master Set	-----

PREPARED FOR : HHHunt Homes
1 Fenton Main Street
Suite 280
Cary, NC 27511

DATE : May 21, 2025

DESIGNER CONTACT:
ADAM AYCOCK, EI

DRAWN BY:
ADAM AYCOCK, EI

MITCHELL ENVIRONMENTAL, PA
C-2911

1501 LAKESTONE VILLAGE LANE
SUITE 205
FUQUAY VARINA, NC 27526

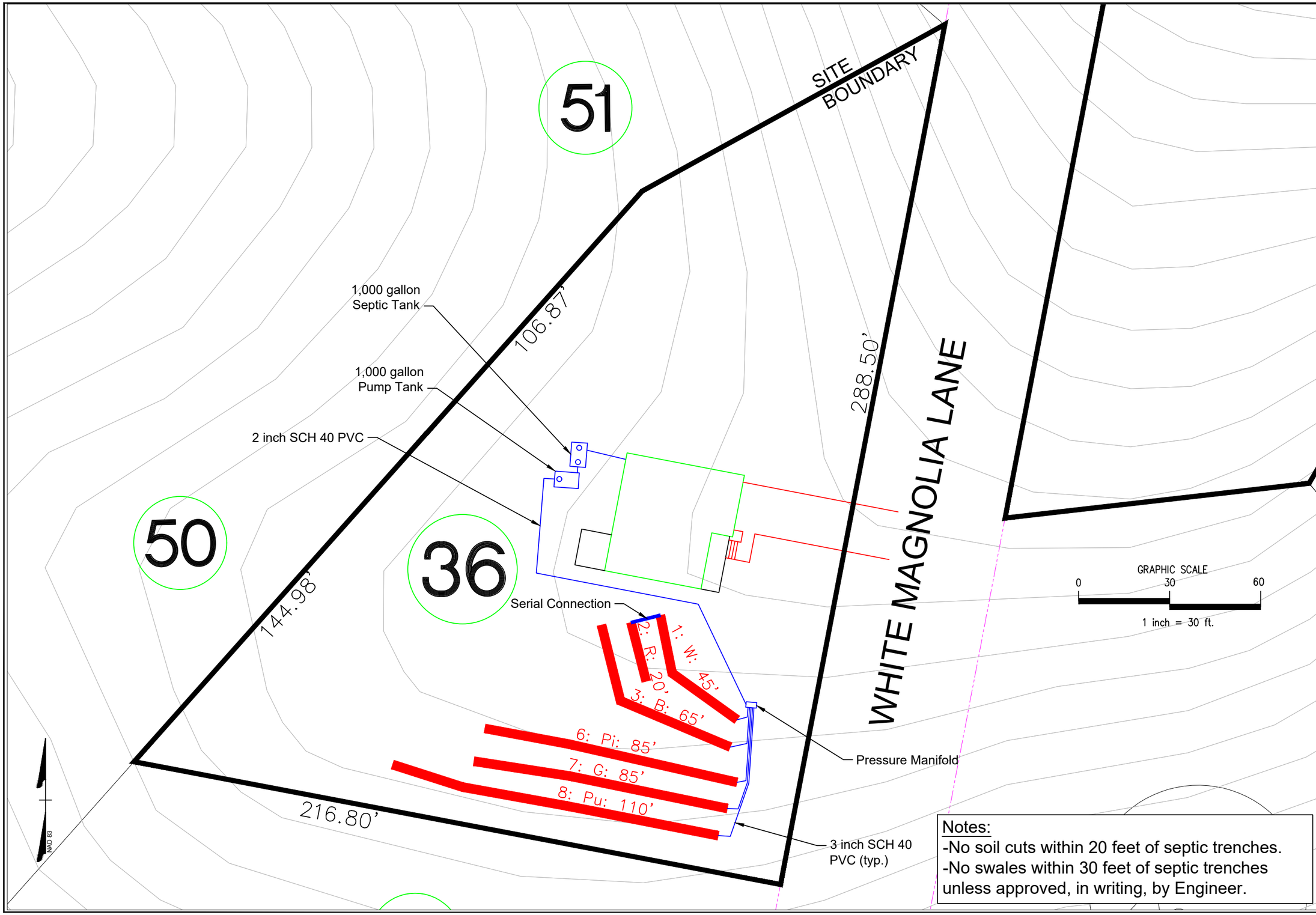

Notes:
-No soil cuts within 20 feet of septic trenches.
-No swales within 30 feet of septic trenches unless approved, in writing, by Engineer.

SHEET NUMBER

2 of 7

Magnolia Acres
Lot 36
Initial Nitrification Field

REVISION NO.	DATE
Original Submittal	May 21, 2025
Revision 1	-----
Revision 2	-----
Revision 3	-----
Master Set	-----

PREPARED FOR : HHHunt Homes
1 Fenton Main Street
Suite 280
Cary, NC 27511

DATE : May 21, 2025

DESIGNER CONTACT:
ADAM AYCOCK, EI

DRAWN BY:
ADAM AYCOCK, EI

MITCHELL ENVIRONMENTAL, PA
C-2911

1501 LAKESTONE VILLAGE LANE
SUITE 205
FUQUAY VARINA, NC 27526

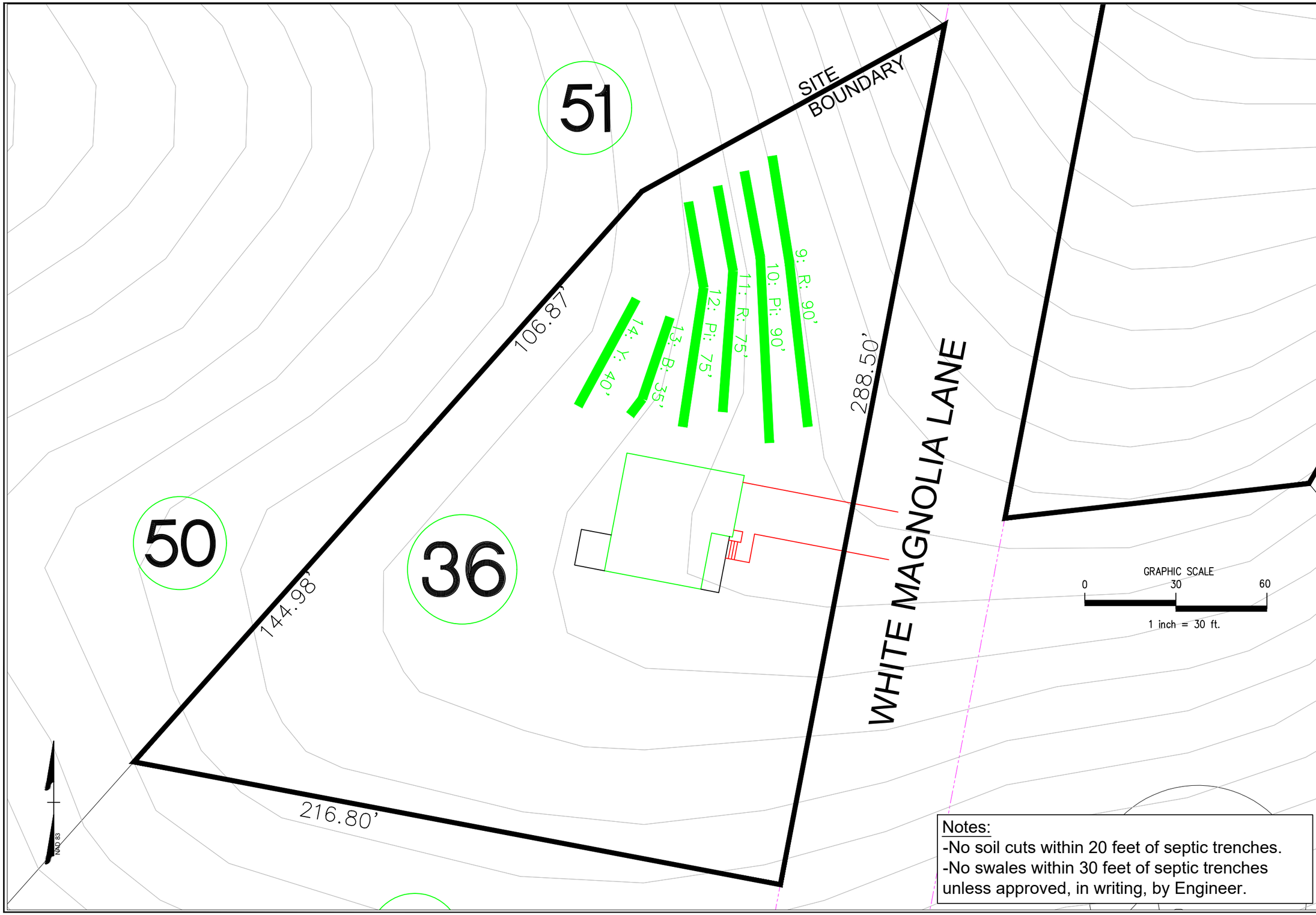

Notes:
-No soil cuts within 20 feet of septic trenches.
-No swales within 30 feet of septic trenches unless approved, in writing, by Engineer.

SHEET NUMBER
3 of 7

Magnolia Acres
Lot 36
Repair Nitrification Field

REVISION NO.	DATE
Original Submittal	May 21, 2025
Revision 1	-----
Revision 2	-----
Revision 3	-----
Master Set	-----

PREPARED FOR : HHHunt Homes
1 Fenton Main Street
Suite 280
Cary, NC 27511

DATE : May 21, 2025

DESIGNER CONTACT:
ADAM AYCOCK, EI

DRAWN BY:
ADAM AYCOCK, EI

MITCHELL ENVIRONMENTAL, PA
C-2911

1501 LAKESTONE VILLAGE LANE
SUITE 205
FUQUAY VARINA, NC 27526

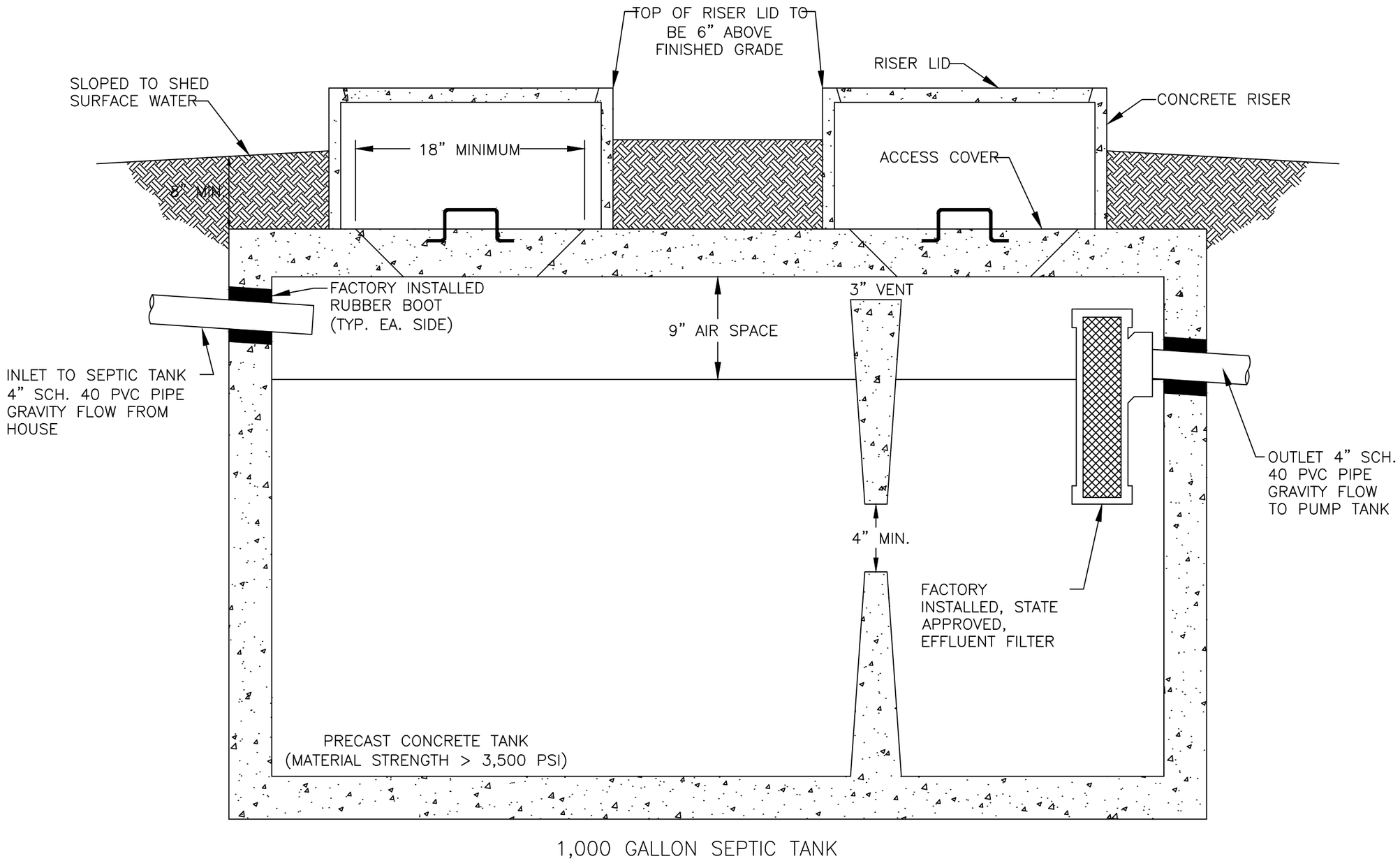

1,000 GALLON SEPTIC TANK

SEPTIC TANK DETAIL

N.T.S.

SHEET NUMBER

4 of 7

Magnolia Acres
Lot 36
Septic Tank Detail

REVISION NO.	DATE
Original Submittal	May 21, 2025
Revision 1	-----
Revision 2	-----
Revision 3	-----
Master Set	-----

PREPARED FOR : HHHunt Homes
1 Fenton Main Street
Suite 280
Cary, NC 27511

DATE : May 21, 2025

DESIGNER CONTACT:
ADAM AYCOCK, EI

DRAWN BY:
ADAM AYCOCK, EI

MITCHELL ENVIRONMENTAL, PA
C-2911

1501 LAKESTONE VILLAGE LANE
SUITE 205
FUQUAY VARINA, NC 27526

* DRAWDOWN SPECIFIED 18.0 GALLONS PER INCH

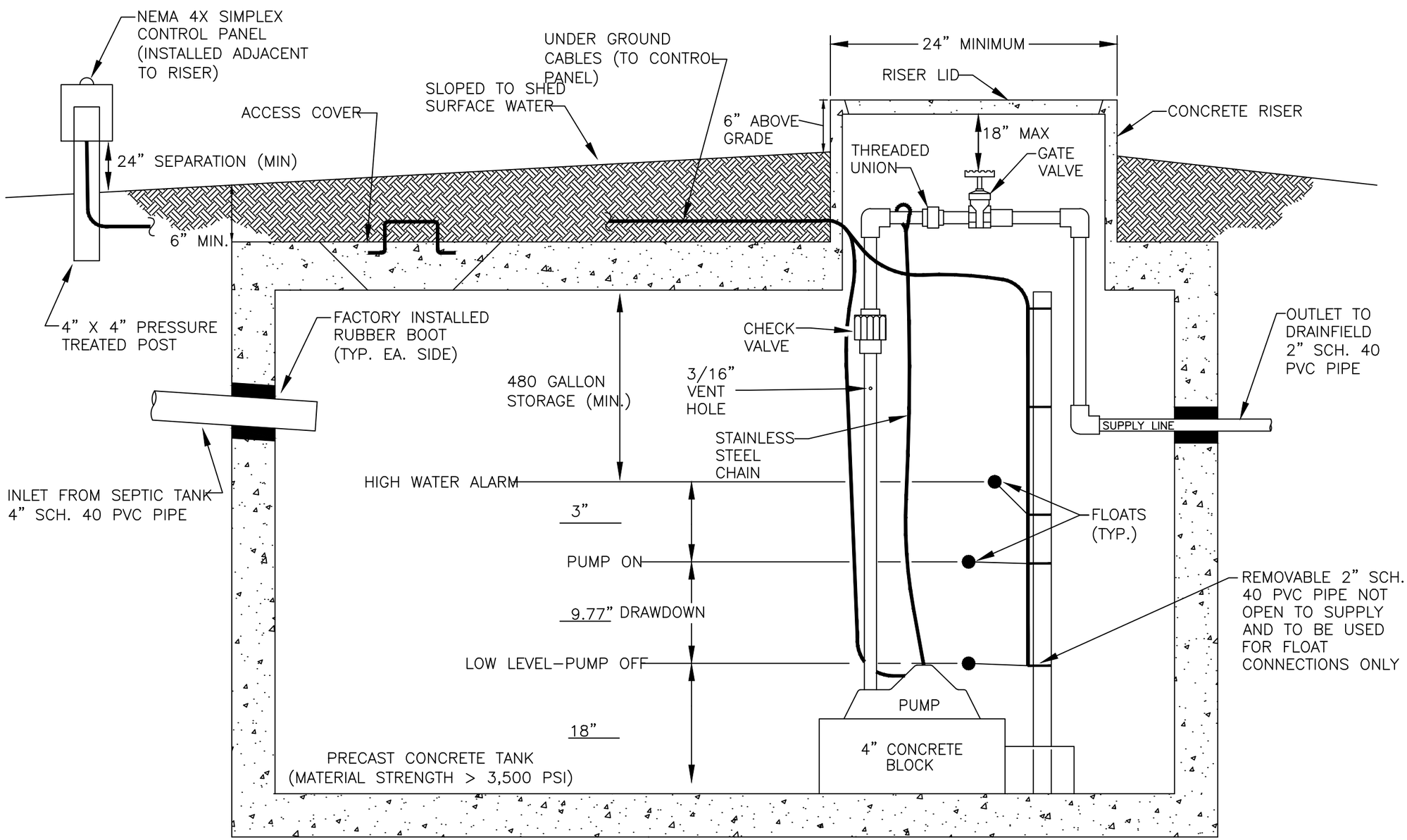

1,000 GALLON PUMP TANK

PUMP TANK DETAIL

N.T.S.

SHEET NUMBER	
5 of 7	Magnolia Acres Lot 36 Pump Tank Detail

REVISION NO.	DATE
Original Submittal	May 21, 2025
Revision 1	----
Revision 2	----
Revision 3	----
Master Set	----

PREPARED FOR : HHHunt Homes
1 Fenton Main
Suite 280
Cary, NC 27511

DATE : May 21, 2025

DESIGNER CONTACT: ADAM AYCOCK, EI

DRAWN BY: ADAM AYCOCK, EI

MITCHELL ENVIRONMENTAL, PA
C–2911

1501 LAKESTONE VILLAGE LANE
SUITE 205
FUQUAY VARINA, NC 27526

PRESSURE MANIFOLD DETAIL
FOR MAGNOLIA ACRES LOT 36 INITIAL SEPTIC SYSTEM

N.T.S.

NOTE: MANIFOLD MAY NEED TO BE FLIPPED SO THAT SUPPLY LINE ENTRANCE AND CLEANOUTS ARE REVERSED. SEE SITE PLAN.

NOTE: THE NUMBER OF TAPS MAY VARY FROM LOT TO LOT. SEE DESIGN SHEET FOR NUMBER OF TAPS.

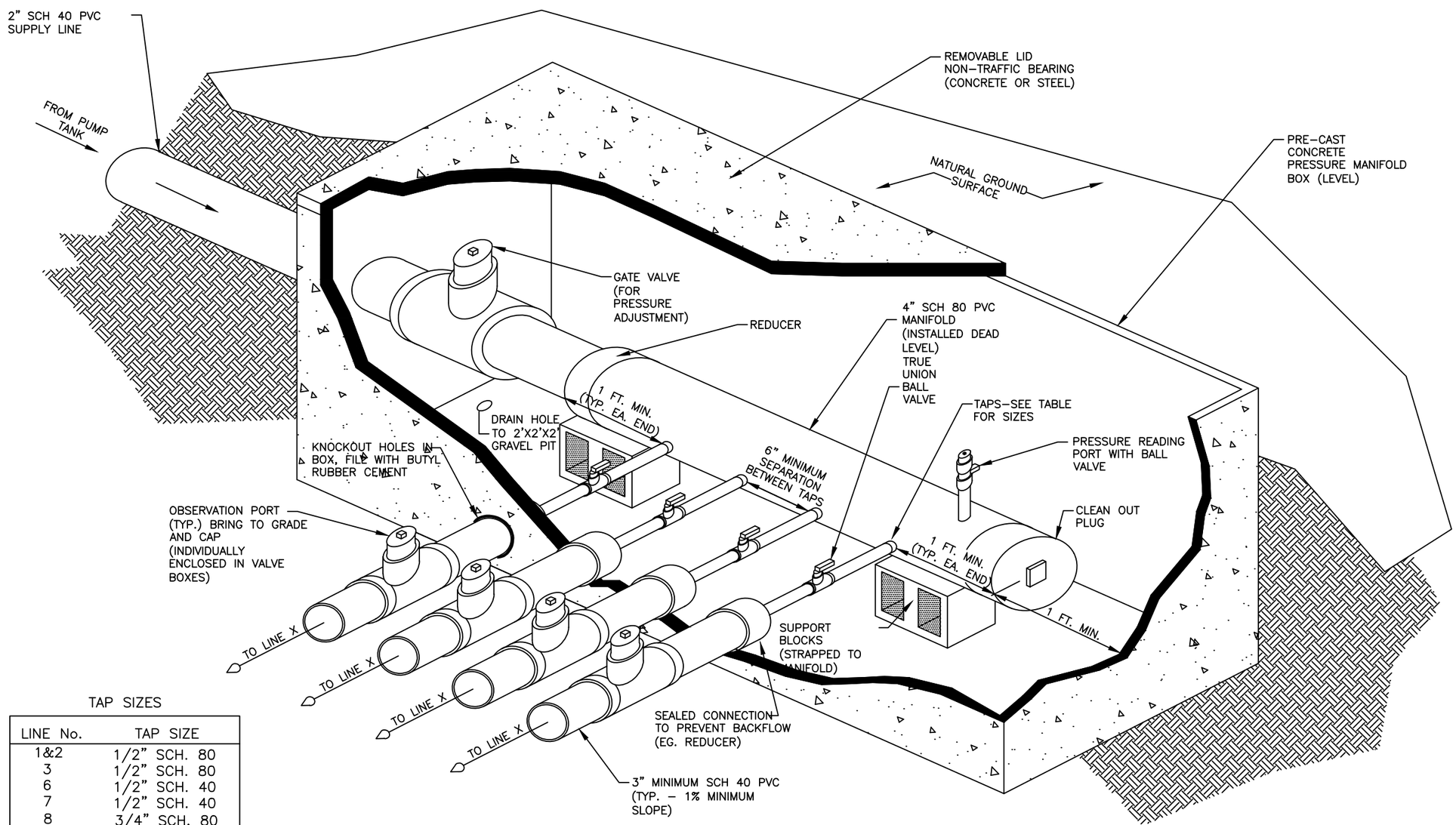

TAP SIZES

LINE No.	TAP SIZE
1&2	1/2" SCH. 80
3	1/2" SCH. 80
6	1/2" SCH. 40
7	1/2" SCH. 40
8	3/4" SCH. 80

SHEET NUMBER

6 of 7

Magnolia Acres
Lot 36
Pressure Manifold Detail

REVISION NO.	DATE
Original Submittal	May 21, 2025
Revision 1	-----
Revision 2	-----
Revision 3	-----
Master Set	-----

PREPARED FOR : HHHunt Homes
1 Fenton Main Street
Suite 280
Cary, NC 27511

DATE : May 21, 2025

DESIGNER CONTACT:
ADAM AYCOCK, EI

DRAWN BY:
ADAM AYCOCK, EI

MITCHELL ENVIRONMENTAL, PA
C-2911

1501 LAKESTONE VILLAGE LANE
SUITE 205
FUQUAY VARINA, NC 27526

NITRIFICATION TRENCH DETAIL FOR EZ-FLOW

N.T.S.

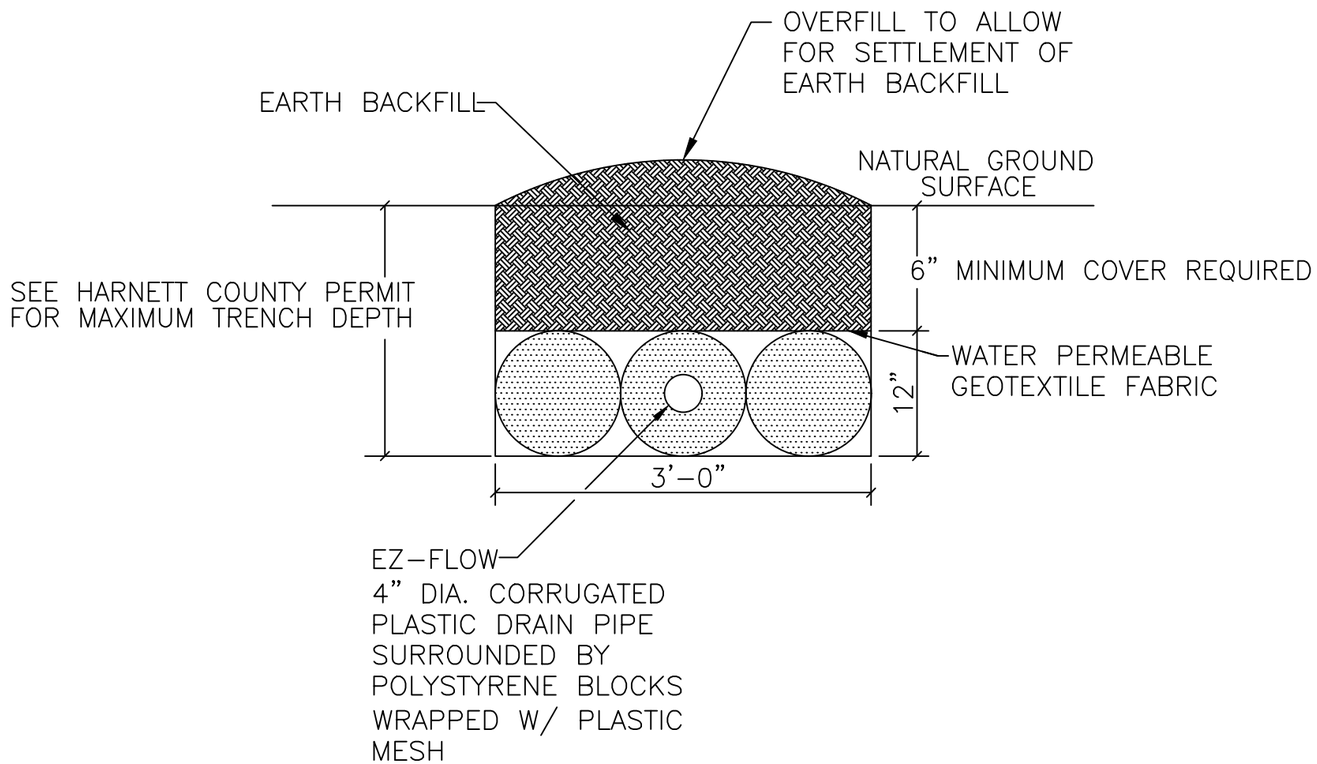

NOTES:

1. PERFORATED CORRUGATED PLASTIC PIPE SHALL MEET REQUIREMENTS OF ASTM D 2729.
2. PIPE SHALL BE LEVEL.
3. ENDCAP SHALL BE PROVIDED AT END OF ALL CORRUGATED PLASTIC PIPE LINES.
4. TRENCH BOTTOM SHALL BE LEVEL.
5. HAND RAKE TRENCH WALLS PRIOR TO PLACEMENT OF TRENCH MEDIA IF SOIL SMEARING IS PRESENT.

SHEET NUMBER

7 of 7

Magnolia Acres
Lot 36
Trench Detail

REVISION NO.	DATE
Original Submittal	May 21, 2025
Revision 1	-----
Revision 2	-----
Revision 3	-----
Master Set	-----

PREPARED FOR : HHHunt Homes
1 Fenton Main Street
Suite 280
Cary, NC 27511

DATE : May 21, 2025

DESIGNER CONTACT:
ADAM AYCOCK, EI

DRAWN BY:
ADAM AYCOCK, EI

MITCHELL ENVIRONMENTAL, PA
C-2911
1501 LAKESTONE VILLAGE LANE
SUITE 205
FUQUAY VARINA, NC 27526