Carter Sanford Component Plant
298 Harvey Faulk Rd
Sanford, NC 27332

Phone #:919-775-1450

Builder: **HH Hunt Homes Raleigh Durham**

Model: **Chatham FA MNR SP 3FL SL GLH**

THE PLACEMENT PLAN NOTES:

1. The Placement Plan is a diagram for truss installation. It is not an engineered drawing and has not been reviewed by an engineer. The Owner/Building Designer is responsible for obtaining an engineer's review if one is required by the local jurisdiction.
2. The responsibilities of the Owner, Contractor, Building Designer, Component Designer and Component Manufacturer shall be as set forth in ANSI/TPI 1. Capitalized terms shall be as defined in ANSI/TP 1 unless otherwise indicated.
3. Each Component is designed as an individual component utilizing information provided by others. The Owner/Building Designer is responsible for reviewing all Component Submittal Packages and individual Component Design Drawings for compliance with the Construction Documents and compatibility with the overall Building design.
4. Contractor will not proceed with component installation until the Owner/Building Designer has reviewed the Component Submittal Package. Questions on the suitability of any Component will be resolved by the Building Designer.
5. The Building Designer and Contractor are responsible for all temporary and permanent bracing.
6. The Placement Plan assumes the building is dimensionally correct, structurally sound, and in a suitable condition to support each Component during installation and thereafter, including but not limited to installation of all bearing points. Proper design and construction of all structural components, including foundations, headers, beams, walls and columns are the responsibility of the Owner, Building Designer and Contractor.
7. Do not cut, drill, or modify any Component without first consulting the Component Manufacturer or Building Designer. Damaged Components shall not be installed unless directed by the Building Designer or approved by the Component Manufacturer.
8. Components must be handled and installed following all applicable safety standards and best practices, including but not limited to BCSI, OSHA, TPI and local codes. Failure to properly handle, brace or otherwise install Component can result in serious injury or death.
9. All uplift connectors shown within these documents are recommendations only. Per ANSI/TPI 1, all uplift connectors are the responsibility of the building designer and or contractor.

Approved By: _____ **Date:** _____

** FRAMER MUST REFER TO PLANS WHILE SETTING COMPONENTS. ** DAMAGED COMPONENTS SHOULD NOT BE INSTALLED UNLESS TOLD TO BY THE COMPONENT PLANT. ** ALL BEARING POINTS MUST BE INSTALLED PRIOR TO SETTING ANY COMPONENTS.

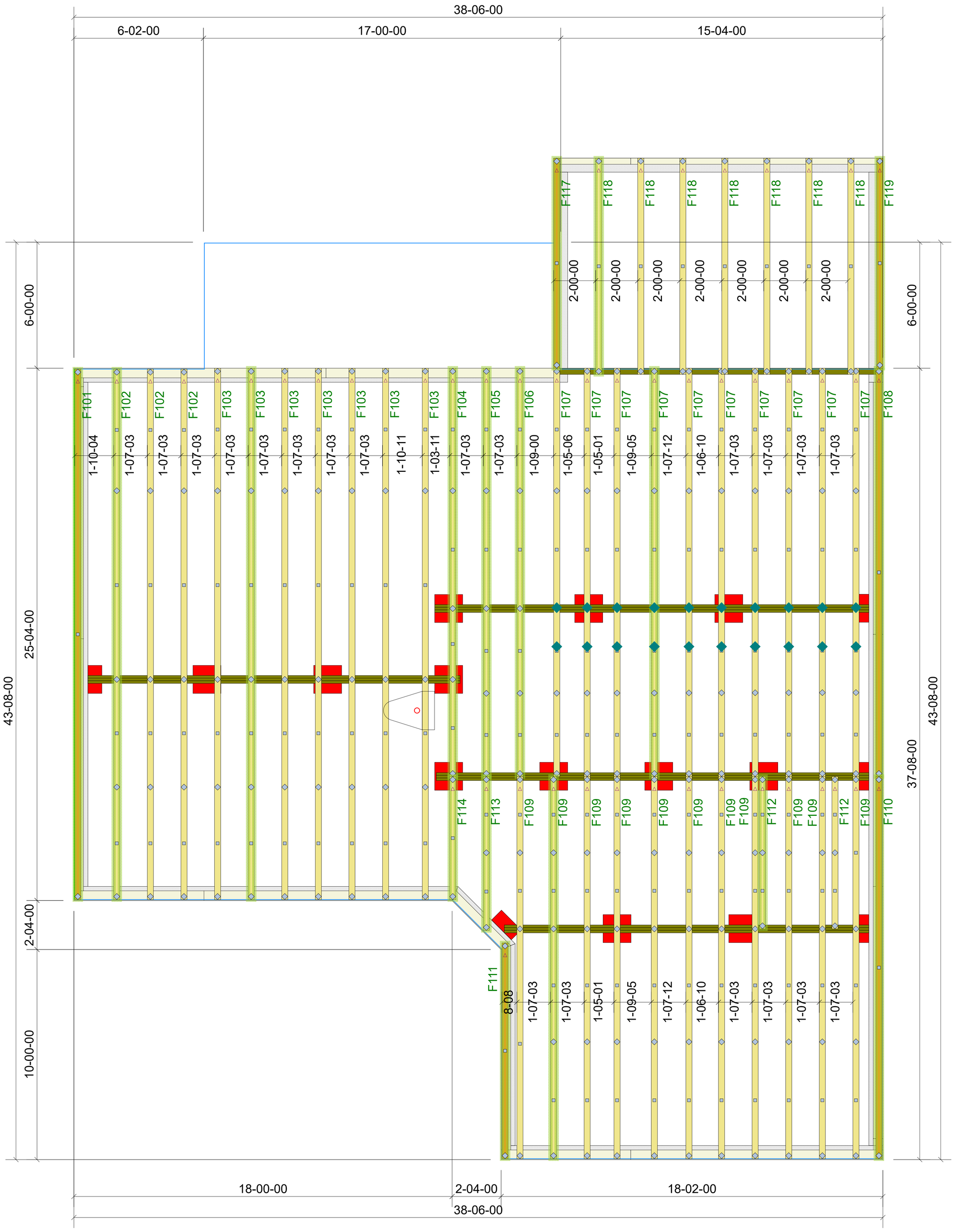

Truss Drawing Left End Indicator

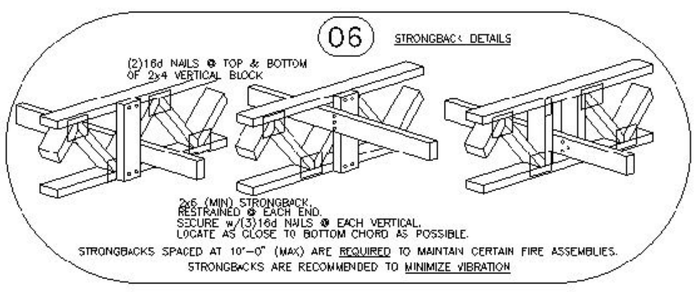

** GIRDERS MUST BE FULLY CONNECTED TOGETHER PRIOR TO ADDING ANY LOADS. ** DIMENSIONS ARE READ AS: FOOT-INCH-SIXTEENTH. ** TRUSS TO TRUSS CONNECTIONS ARE TOE-NAILED, UNLESS NOTED OTHERWISE.

General Notes:

** TRIANGULAR SYMBOL NEAR END OF TRUSS INDICATES LEFT END OF TRUSS AS SHOWN ON INDIVIDUAL TRUSS DRAWINGS.

** PLUMBING DROPS NOTED ARE IN THE APPROXIMATE LOCATIONS PER PLAN. BUILDER TO VERIFY LOCATIONS BEFORE SETTING TRUSSES.

** REFER TO FINAL TRUSS ENGINEERING SHEETS FOR PLY TO PLY CONNECTIONS.

** CUTTING OR DRILLING OF COMPONENTS SHOULD NOT BE DONE WITHOUT CONTACTING COMPONENT SUPPLIER FIRST. CUSTOMER TAKES FULL RESPONSIBILITY FOR COMPONENTS IF CUT BEFORE AUTHORIZATION.

** ALL POINT LOADS FROM ABOVE MUST BE TRANSFERRED TO BEARING FROM UNDER SIDE OF SHEATHING.

Scale: NTS
Date: 4/1/2025
Designer: Blake Scrivner
Project Number: 25030166-02
Sheet Number: 1/1

HH Hunt Homes Raleigh Durham

16 Magnolia Acres
Chatham FA Crawl

FLOOR PLACEMENT PLAN

CARTER Lumber

THIS IS A TRUSS PLACEMENT DIAGRAM ONLY. These trusses are designed as individual components to be incorporated into the building design at the specification of the building designer. See Individual design sheets for each truss design identified on the placement drawing. The building designer is responsible for temporary and permanent bracing of the roof and floor systems and for the overall structure. The disign of the tuss support structure including headers, beams, walls, and columns is the responsibility of the building designer. For general guidance regarding the bracing, consult "Bracing of Wood Truss" available from the Truss Plate Institute, 583 D'Onifrio Drive: Madison, WI 53179

Revisions	
00/00/00	Name
00/00/00	Name
00/00/00	Name
00/00/00	Name
00/00/00	Name

ENGINEERING BY TRENCO
A MiTek Affiliate

Trenco
818 Soundside Rd
Edenton, NC 27932

Re: 25030166-02
Install 34 Magnolia Acres-Crawl-Chatham FA MNR SP 3FL SL GLH

The truss drawing(s) referenced below have been prepared by Truss Engineering Co. under my direct supervision based on the parameters provided by Carter Components (Sanford, NC)).

Pages or sheets covered by this seal: I72384844 thru I72384861

My license renewal date for the state of North Carolina is December 31, 2025.

North Carolina COA: C-0844

NORTH CAROLINA PROFESSIONAL SEAL 28677 ENGINEER JOHN L. GALINSKI

April 1,2025

Galinski, John

IMPORTANT NOTE: The seal on these truss component designs is a certification that the engineer named is licensed in the jurisdiction(s) identified and that the designs comply with ANSI/TPI 1. These designs are based upon parameters shown (e.g., loads, supports, dimensions, shapes and design codes), which were given to MiTek or TRENCO. Any project specific information included is for MiTek's or TRENCO's customers file reference purpose only, and was not taken into account in the preparation of these designs. MiTek or TRENCO has not independently verified the applicability of the design parameters or the designs for any particular building. Before use, the building designer should verify applicability of design parameters and properly incorporate these designs into the overall building design per ANSI/TPI 1, Chapter 2.

Job	Truss	Truss Type	Qty	Ply	Install 34 Magnolia Acres-Crawl-Chatham FA MNR SP I72384844
25030166-02	F101	Floor Supported Gable	1	1	Job Reference (optional)

Carter Components (Sanford, NC), Sanford, NC - 27332, Run: 8.73 S Feb 19 2025 Print: 8.730 S Feb 19 2025 MiTek Industries, Inc. Sun Mar 30 12:22:28 Page: 1
ID:4rtVQb18upFvLPbhrmqQ?czmHJz-RfC?PsB70Hq3NSgPqnL8w3uITXbGKWrCDoi7J4zJC?f

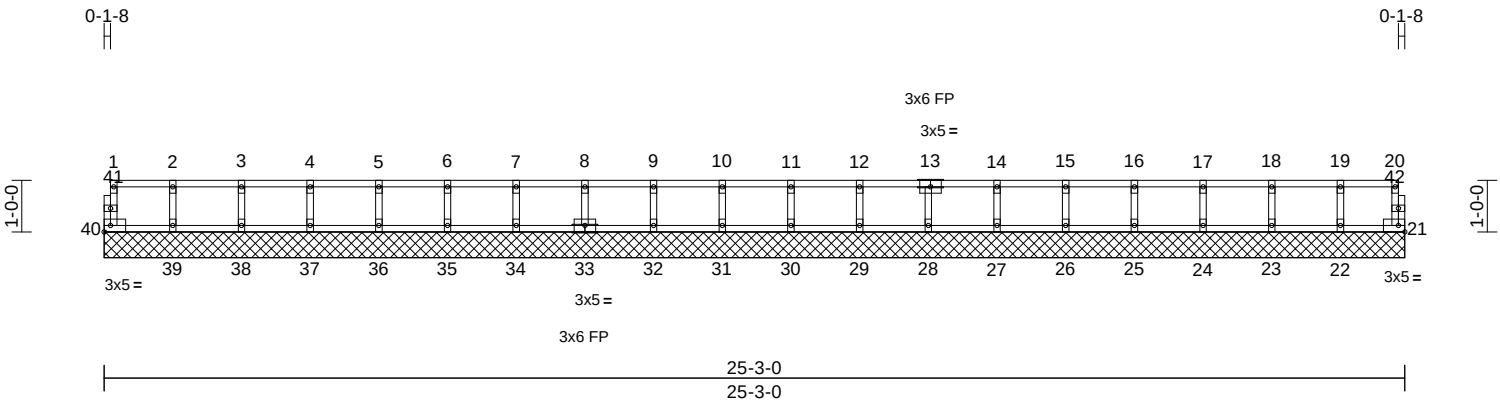

Scale = 1:44.7

Loading	(psf)	Spacing	1-7-3	CSI		DEFL	in	(loc)	l/defl	L/d	PLATES	GRIP
TCLL	40.0	Plate Grip DOL	1.00	TC	0.06	Vert(LL)	n/a	-	n/a	999	MT20	244/190
TCDL	10.0	Lumber DOL	1.00	BC	0.01	Vert(TL)	n/a	-	n/a	999		
BCLL	0.0	Rep Stress Incr	YES	WB	0.02	Horiz(TL)	0.00	21	n/a	n/a		
BCDL	5.0	Code	IRC2021/TPI2014	Matrix-MR							Weight: 99 lb	FT = 20%F, 11%E

LUMBER
TOP CHORD 2x4 SP No.2(flat)
BOT CHORD 2x4 SP No.2(flat)
WEBS 2x4 SP No.3(flat)
OTHERS 2x4 SP No.3(flat)

BRACING
TOP CHORD Structural wood sheathing directly applied or 6-0-0 oc purlins, except end verticals.
BOT CHORD Rigid ceiling directly applied or 10-0-0 oc bracing.

REACTIONS (size) 21=25-3-0, 22=25-3-0, 23=25-3-0, 24=25-3-0, 25=25-3-0, 26=25-3-0, 27=25-3-0, 28=25-3-0, 29=25-3-0, 30=25-3-0, 31=25-3-0, 32=25-3-0, 33=25-3-0, 34=25-3-0, 35=25-3-0, 36=25-3-0, 37=25-3-0, 38=25-3-0, 39=25-3-0, 40=25-3-0
Max Grav 21=43 (LC 1), 22=108 (LC 1), 23=120 (LC 1), 24=117 (LC 1), 25=117 (LC 1), 26=118 (LC 1), 27=115 (LC 1), 28=117 (LC 1), 29=120 (LC 1), 30=117 (LC 1), 31=117 (LC 1), 32=117 (LC 1), 33=117 (LC 1), 34=117 (LC 1), 35=117 (LC 1), 36=117 (LC 1), 37=117 (LC 1), 38=117 (LC 1), 39=119 (LC 1), 40=41 (LC 1)

FORCES (lb) - Maximum Compression/Maximum Tension
TOP CHORD 1-40=-39/0, 20-21=-38/0, 1-2=-6/0, 2-3=-6/0, 3-4=-6/0, 4-5=-6/0, 5-6=-6/0, 6-7=-6/0, 7-8=-6/0, 8-9=-6/0, 9-10=-6/0, 10-11=-6/0, 11-12=-6/0, 12-14=-11/0, 14-15=-11/0, 15-16=-11/0, 16-17=-11/0, 17-18=-11/0, 18-19=-11/0, 19-20=-11/0
BOT CHORD 39-40=0/6, 38-39=0/6, 37-38=0/6, 36-37=0/6, 35-36=0/6, 34-35=0/6, 32-34=0/6, 31-32=0/6, 30-31=0/6, 29-30=0/6, 28-29=0/6, 27-28=0/11, 26-27=0/11, 25-26=0/11, 24-25=0/11, 23-24=0/11, 22-23=0/11, 21-22=0/11
WEBS 2-39=-106/0, 3-38=-107/0, 4-37=-107/0, 5-36=-107/0, 6-35=-107/0, 7-34=-107/0, 8-33=-107/0, 9-32=-107/0, 10-31=-107/0, 11-30=-106/0, 12-29=-109/0, 13-28=-107/0, 14-27=-104/0, 15-26=-107/0, 16-25=-107/0, 17-24=-106/0, 18-23=-108/0, 19-22=-99/0

NOTES
1) All plates are 1.5x3 MT20 unless otherwise indicated.
2) Gable requires continuous bottom chord bearing.
3) Truss to be fully sheathed from one face or securely braced against lateral movement (i.e. diagonal web).
4) Gable studs spaced at 1-4-0 oc.
5) Recommend 2x6 strongbacks, on edge, spaced at 10-00-00 oc and fastened to each truss with 3-10d (0.131" X 3") nails. Strongbacks to be attached to walls at their outer ends or restrained by other means.

LOAD CASE(S) Standard

April 1,2025

WARNING - Verify design parameters and READ NOTES ON THIS AND INCLUDED MITEK REFERENCE PAGE MII-7473 rev. 1/2/2023 BEFORE USE.
Design valid for use only with MiTek® connectors. This design is based only upon parameters shown, and is for an individual building component, not a truss system. Before use, the building designer must verify the applicability of design parameters and properly incorporate this design into the overall building design. Bracing indicated is to prevent buckling of individual truss web and/or chord members only. Additional temporary and permanent bracing is always required for stability and to prevent collapse with possible personal injury and property damage. For general guidance regarding the fabrication, storage, delivery, erection and bracing of trusses and truss systems, see **ANSI/TPI1 Quality Criteria and DSB-22** available from Truss Plate Institute (www.tpinst.org) and **BCSI Building Component Safety Information** available from the Structural Building Component Association (www.sbcacomponents.com)

ENGINEERING BY TRENCO A MiTek Affiliate
818 Soundside Road
Edenton, NC 27932

Job	Truss	Truss Type	Qty	Ply	Install 34 Magnolia Acres-Crawl-Chatham FA MNR SP I72384845
25030166-02	F104	Floor	1	1	Job Reference (optional)

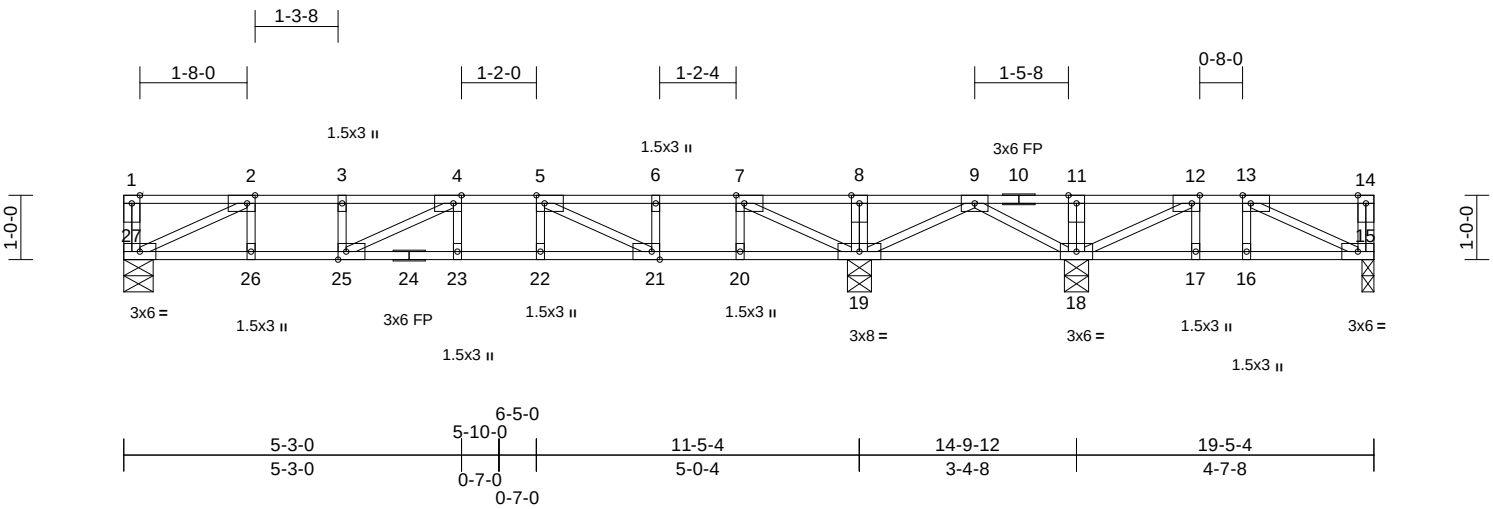

Scale = 1:35.8

Plate Offsets (X, Y): [2:0-1-8,Edge], [4:0-1-8,Edge], [5:0-1-8,Edge], [7:0-1-8,Edge], [12:0-1-8,Edge], [13:0-1-8,Edge], [21:0-1-8,Edge], [25:0-1-8,Edge]

Loading	(psf)	Spacing	1-7-3	CSI		DEFL	in	(loc)	l/defl	L/d	PLATES	GRIP
TCLL	40.0	Plate Grip DOL	1.00	TC	0.86	Vert(LL)	-0.15	23-25	>877	480	MT20	244/190
TCDL	10.0	Lumber DOL	1.00	BC	0.82	Vert(CT)	-0.21	23-25	>637	360		
BCLL	0.0	Rep Stress Incr	YES	WB	0.34	Horz(CT)	0.02	19	n/a	n/a		
BCDL	5.0	Code	IRC2021/TPI2014	Matrix-MSH							Weight: 97 lb	FT = 20%F, 11%E

LUMBER
TOP CHORD 2x4 SP No.2(flat)
BOT CHORD 2x4 SP No.2(flat) *Except* 24-15:2x4 SP No.1(flat)
WEBS 2x4 SP No.3(flat)

BRACING
TOP CHORD Structural wood sheathing directly applied or 6-0-0 oc purlins, except end verticals.
BOT CHORD Rigid ceiling directly applied or 10-0-0 oc bracing, Except:
6-0-0 oc bracing: 18-19.

REACTIONS (size) 15=0-2-4, 18=0-4-8, 19=0-4-8, 27=0-5-8
Max Grav 15=181 (LC 4), 18=324 (LC 4), 19=918 (LC 16), 27=434 (LC 5)

FORCES (lb) - Maximum Compression/Maximum Tension
TOP CHORD 1-27=-32/30, 14-15=-68/0, 1-2=0/0, 2-3=-931/0, 3-4=-931/0, 4-5=-1234/0, 5-6=-457/0, 6-7=-457/0, 7-8=0/852, 8-9=0/852, 9-11=0/142, 11-12=0/142, 12-13=-222/0, 13-14=0/0
BOT CHORD 26-27=0/931, 25-26=0/931, 23-25=0/1234, 22-23=0/1234, 21-22=0/1234, 20-21=0/457, 19-20=0/457, 18-19=-405/25, 17-18=0/222, 16-17=0/222, 15-16=0/222
WEBS 4-23=-39/68, 5-22=0/159, 8-19=-97/0, 11-18=-140/0, 4-25=-405/0, 2-27=-1030/0, 2-26=0/167, 3-25=-24/83, 7-19=-1424/0, 5-21=-884/0, 6-21=0/154, 7-20=0/270, 12-18=-321/0, 13-15=-246/0, 12-17=-5/43, 13-16=-27/18, 9-19=-650/0, 9-18=-63/381

NOTES
1) Unbalanced floor live loads have been considered for this design.
2) All plates are 3x5 MT20 unless otherwise indicated.
3) Provide mechanical connection (by others) of truss to bearing plate at joint(s) 15.
4) Recommend 2x6 strongbacks, on edge, spaced at 10-00-00 oc and fastened to each truss with 3-10d (0.131" X 3") nails. Strongbacks to be attached to walls at their outer ends or restrained by other means.
5) CAUTION, Do not erect truss backwards.

LOAD CASE(S) Standard

April 1,2025

WARNING - Verify design parameters and READ NOTES ON THIS AND INCLUDED MITEK REFERENCE PAGE MII-7473 rev. 1/2/2023 BEFORE USE.
Design valid for use only with MiTek® connectors. This design is based only upon parameters shown, and is for an individual building component, not a truss system. Before use, the building designer must verify the applicability of design parameters and properly incorporate this design into the overall building design. Bracing indicated is to prevent buckling of individual truss web and/or chord members only. Additional temporary and permanent bracing is always required for stability and to prevent collapse with possible personal injury and property damage. For general guidance regarding the fabrication, storage, delivery, erection and bracing of trusses and truss systems, see **ANSI/TPI1 Quality Criteria and DSB-22** available from Truss Plate Institute (www.tpinst.org) and **BCSI Building Component Safety Information** available from the Structural Building Component Association (www.sbcacomponents.com)

ENGINEERING BY TRENCO A MiTek Affiliate
818 Soundside Road
Edenton, NC 27932

Job	Truss	Truss Type	Qty	Ply	Install 34 Magnolia Acres-Crawl-Chatham FA MNR SP I72384846
25030166-02	F105	Floor	1	1	Job Reference (optional)

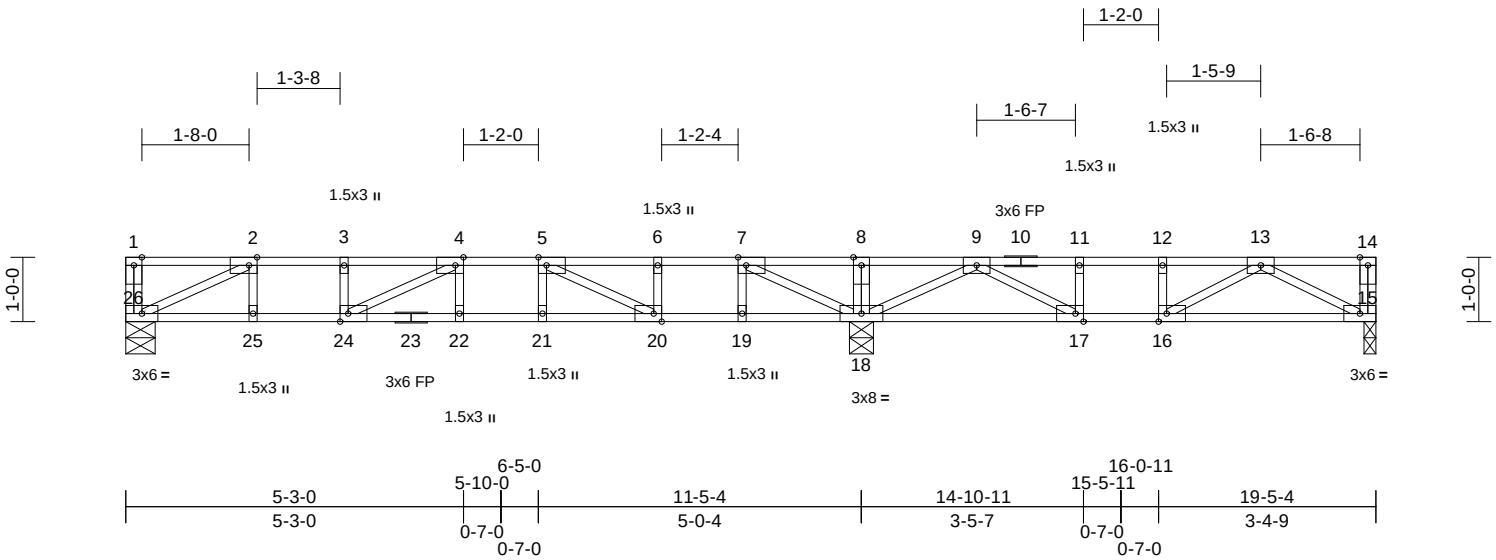

Scale = 1:35.8

Plate Offsets (X, Y): [2:0-1-8,Edge], [4:0-1-8,Edge], [5:0-1-8,Edge], [7:0-1-8,Edge], [16:0-1-8,Edge], [17:0-1-8,Edge], [20:0-1-8,Edge], [24:0-1-8,Edge]

Loading	(psf)	Spacing	1-7-3	CSI		DEFL	in	(loc)	l/defl	L/d	PLATES	GRIP
TCLL	40.0	Plate Grip DOL	1.00	TC	0.86	Vert(LL)	-0.16	22-24	>859	480	MT20	244/190
TCDL	10.0	Lumber DOL	1.00	BC	0.84	Vert(CT)	-0.22	22-24	>627	360		
BCLL	0.0	Rep Stress Incr	YES	WB	0.34	Horz(CT)	0.02	15	n/a	n/a		
BCDL	5.0	Code	IRC2021/TPI2014	Matrix-MSH							Weight: 95 lb	FT = 20%F, 11%E

LUMBER
TOP CHORD 2x4 SP No.2(flat)
BOT CHORD 2x4 SP No.2(flat) *Except* 23-15:2x4 SP No.1(flat)
WEBS 2x4 SP No.3(flat)

BRACING
TOP CHORD Structural wood sheathing directly applied or 6-0-0 oc purlins, except end verticals.
BOT CHORD Rigid ceiling directly applied or 10-0-0 oc bracing, Except:
6-0-0 oc bracing: 17-18,16-17,15-16.

REACTIONS (size) 15=0-2-4, 18=0-4-8, 26=0-5-8
Max Grav 15=306 (LC 4), 18=996 (LC 1), 26=446 (LC 3)

FORCES (lb) - Maximum Compression/Maximum Tension
TOP CHORD 1-26=-32/30, 14-15=-53/0, 1-2=0/0, 2-3=-965/0, 3-4=-965/0, 4-5=-1310/0, 5-6=-577/0, 6-7=-577/0, 7-8=0/835, 8-9=0/835, 9-11=-598/106, 11-12=-598/106, 12-13=-598/106, 13-14=0/0
BOT CHORD 25-26=0/965, 24-25=0/965, 22-24=0/1310, 21-22=0/1310, 20-21=0/1310, 19-20=0/577, 18-19=0/577, 17-18=-369/286, 16-17=-106/598, 15-16=-5/457
WEBS 4-22=-43/66, 5-21=0/163, 8-18=-102/0, 11-17=-180/0, 12-16=-76/42, 4-24=-399/0, 2-26=-1067/0, 2-25=0/169, 3-24=-28/82, 7-18=-1417/0, 5-20=-884/0, 6-20=0/157, 7-19=0/274, 13-15=-516/6, 13-16=-116/162, 9-18=-839/0, 9-17=0/514

NOTES
1) Unbalanced floor live loads have been considered for this design.
2) All plates are 3x5 MT20 unless otherwise indicated.
3) Provide mechanical connection (by others) of truss to bearing plate at joint(s) 15.
4) Recommend 2x6 strongbacks, on edge, spaced at 10-00-00 oc and fastened to each truss with 3-10d (0.131" X 3") nails. Strongbacks to be attached to walls at their outer ends or restrained by other means.
5) CAUTION, Do not erect truss backwards.

LOAD CASE(S) Standard

April 1,2025

WARNING - Verify design parameters and READ NOTES ON THIS AND INCLUDED MITEK REFERENCE PAGE MII-7473 rev. 1/2/2023 BEFORE USE.
Design valid for use only with MiTek® connectors. This design is based only upon parameters shown, and is for an individual building component, not a truss system. Before use, the building designer must verify the applicability of design parameters and properly incorporate this design into the overall building design. Bracing indicated is to prevent buckling of individual truss web and/or chord members only. Additional temporary and permanent bracing is always required for stability and to prevent collapse with possible personal injury and property damage. For general guidance regarding the fabrication, storage, delivery, erection and bracing of trusses and truss systems, see **ANSI/TPI1 Quality Criteria and DSB-22** available from Truss Plate Institute (www.tpinst.org) and **BCSI Building Component Safety Information** available from the Structural Building Component Association (www.sbcacomponents.com)

ENGINEERING BY TRENCO A MiTek Affiliate
818 Soundside Road
Edenton, NC 27932

Job	Truss	Truss Type	Qty	Ply	Install 34 Magnolia Acres-Crawl-Chatham FA MNR SP I72384847
25030166-02	F106	Floor	1	1	Job Reference (optional)

Carter Components (Sanford, NC), Sanford, NC - 27332, Run: 8.73 S Feb 19 2025 Print: 8.730 S Feb 19 2025 MiTek Industries, Inc. Sun Mar 30 12:22:29 Page: 1
ID:2P8fJHBAwozdUvOHN8bYILzmHMM-RfC?PsB70Hq3NSgPqnL8w3uITXbGKWrCDoi7J4zJC?f

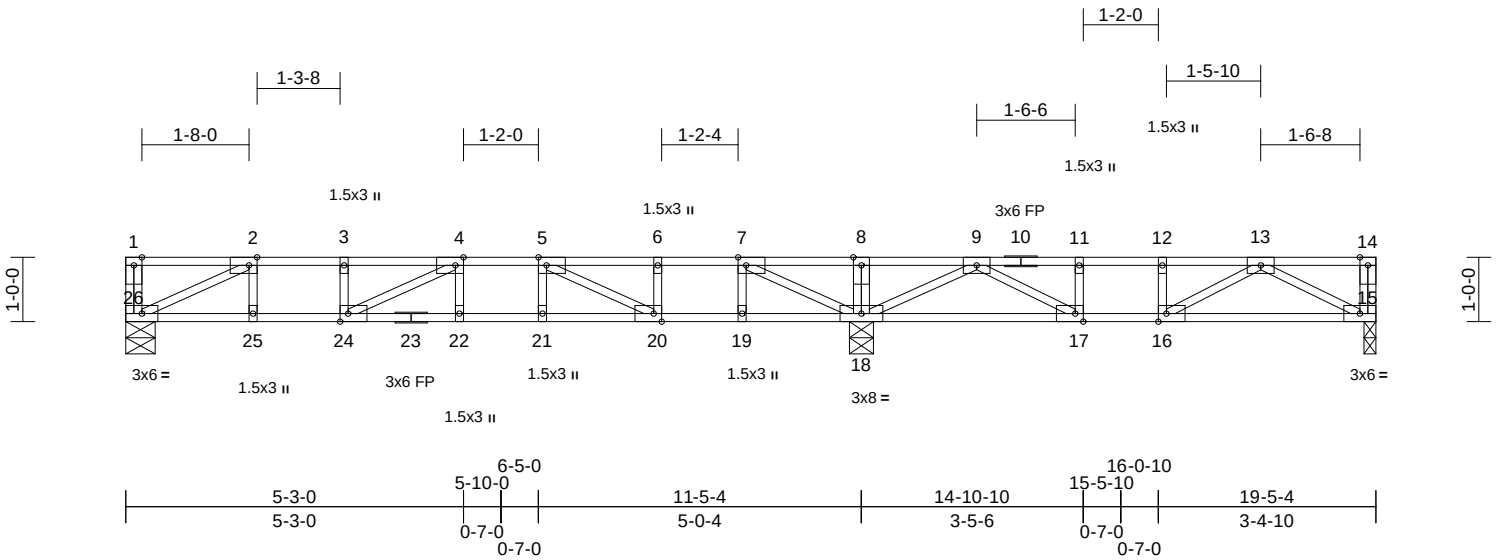

Scale = 1:35.8

Plate Offsets (X, Y): [2:0-1-8,Edge], [4:0-1-8,Edge], [5:0-1-8,Edge], [7:0-1-8,Edge], [16:0-1-8,Edge], [17:0-1-8,Edge], [20:0-1-8,Edge], [24:0-1-8,Edge]

Loading	(psf)	Spacing	1-7-3	CSI		DEFL	in	(loc)	l/defl	L/d	PLATES	GRIP
TCLL	40.0	Plate Grip DOL	1.00	TC	0.86	Vert(LL)	-0.16	22-24	>859	480	MT20	244/190
TCDL	10.0	Lumber DOL	1.00	BC	0.84	Vert(CT)	-0.22	22-24	>627	360		
BCLL	0.0	Rep Stress Incr	YES	WB	0.34	Horz(CT)	0.02	15	n/a	n/a		
BCDL	5.0	Code	IRC2021/TPI2014	Matrix-MSH							Weight: 95 lb	FT = 20%F, 11%E

LUMBER
TOP CHORD 2x4 SP No.2(flat)
BOT CHORD 2x4 SP No.2(flat) *Except* 23-15:2x4 SP No.1(flat)
WEBS 2x4 SP No.3(flat)

BRACING
TOP CHORD Structural wood sheathing directly applied or 6-0-0 oc purlins, except end verticals.
BOT CHORD Rigid ceiling directly applied or 10-0-0 oc bracing, Except:
6-0-0 oc bracing: 17-18,16-17,15-16.

REACTIONS (size) 15=0-2-4, 18=0-4-8, 26=0-5-8
Max Grav 15=306 (LC 4), 18=996 (LC 1), 26=446 (LC 3)

FORCES (lb) - Maximum Compression/Maximum Tension
TOP CHORD 1-26=-32/30, 14-15=-52/0, 1-2=0/0, 2-3=-965/0, 3-4=-965/0, 4-5=-1310/0, 5-6=-577/0, 6-7=-577/0, 7-8=0/835, 8-9=0/835, 9-11=-598/106, 11-12=-598/106, 12-13=-598/106, 13-14=0/0
BOT CHORD 25-26=0/965, 24-25=0/965, 22-24=0/1310, 21-22=0/1310, 20-21=0/1310, 19-20=0/577, 18-19=0/577, 17-18=-369/287, 16-17=-106/598, 15-16=-5/457
WEBS 4-22=-43/66, 5-21=0/163, 8-18=-102/0, 11-17=-180/0, 12-16=-75/42, 4-24=-399/0, 2-26=-1067/0, 2-25=0/169, 3-24=-28/82, 7-18=-1416/0, 5-20=-884/0, 6-20=0/157, 7-19=0/274, 13-15=-516/6, 13-16=-117/162, 9-18=-839/0, 9-17=0/514

NOTES
1) Unbalanced floor live loads have been considered for this design.
2) All plates are 3x5 MT20 unless otherwise indicated.
3) Provide mechanical connection (by others) of truss to bearing plate at joint(s) 15.
4) Recommend 2x6 strongbacks, on edge, spaced at 10-00-00 oc and fastened to each truss with 3-10d (0.131" X 3") nails. Strongbacks to be attached to walls at their outer ends or restrained by other means.
5) CAUTION, Do not erect truss backwards.

LOAD CASE(S) Standard

April 1,2025

WARNING - Verify design parameters and READ NOTES ON THIS AND INCLUDED MITEK REFERENCE PAGE MII-7473 rev. 1/2/2023 BEFORE USE.
Design valid for use only with MiTek® connectors. This design is based only upon parameters shown, and is for an individual building component, not a truss system. Before use, the building designer must verify the applicability of design parameters and properly incorporate this design into the overall building design. Bracing indicated is to prevent buckling of individual truss web and/or chord members only. Additional temporary and permanent bracing is always required for stability and to prevent collapse with possible personal injury and property damage. For general guidance regarding the fabrication, storage, delivery, erection and bracing of trusses and truss systems, see **ANSI/TPI1 Quality Criteria and DSB-22** available from Truss Plate Institute (www.tpinst.org) and **BCSI Building Component Safety Information** available from the Structural Building Component Association (www.sbcacomponents.com)

ENGINEERING BY TRENCO A MiTek Affiliate
818 Soundside Road
Edenton, NC 27932

Job	Truss	Truss Type	Qty	Ply	Install 34 Magnolia Acres-Crawl-Chatham FA MNR SP I72384848
25030166-02	F108	Floor Supported Gable	1	1	Job Reference (optional)

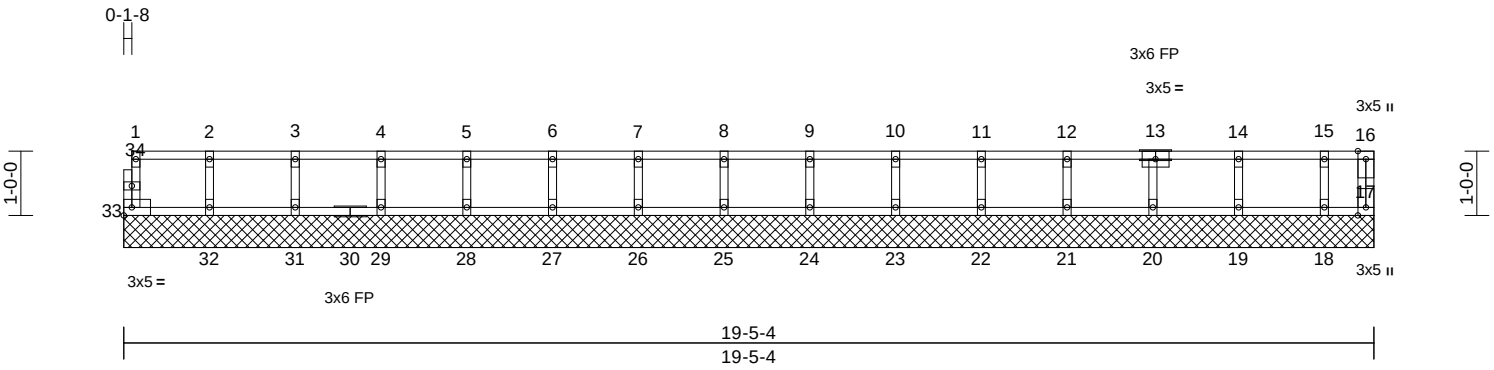

Scale = 1:35.8

Loading	(psf)	Spacing	1-7-3	CSI		DEFL	in	(loc)	l/defl	L/d	PLATES	GRIP
TCLL	40.0	Plate Grip DOL	1.00	TC	0.06	Vert(LL)	n/a	-	n/a	999	MT20	244/190
TCDL	10.0	Lumber DOL	1.00	BC	0.02	Vert(TL)	n/a	-	n/a	999		
BCLL	0.0	Rep Stress Incr	YES	WB	0.02	Horiz(TL)	0.00	17	n/a	n/a		
BCDL	5.0	Code	IRC2021/TPI2014	Matrix-MR							Weight: 77 lb	FT = 20%F, 11%E

LUMBER

TOP CHORD 2x4 SP No.2(flat)
BOT CHORD 2x4 SP No.2(flat)
WEBS 2x4 SP No.3(flat)
OTHERS 2x4 SP No.3(flat)

BRACING

TOP CHORD Structural wood sheathing directly applied or 6-0-0 oc purlins, except end verticals.
BOT CHORD Rigid ceiling directly applied or 10-0-0 oc bracing.

REACTIONS (size) 17=19-5-4, 18=19-5-4, 19=19-5-4, 20=19-5-4, 21=19-5-4, 22=19-5-4, 23=19-5-4, 24=19-5-4, 25=19-5-4, 26=19-5-4, 27=19-5-4, 28=19-5-4, 29=19-5-4, 31=19-5-4, 32=19-5-4, 33=19-5-4
Max Grav 17=27 (LC 1), 18=84 (LC 1), 19=120 (LC 1), 20=116 (LC 1), 21=120 (LC 1), 22=116 (LC 1), 23=117 (LC 1), 24=117 (LC 1), 25=117 (LC 1), 26=117 (LC 1), 27=117 (LC 1), 28=117 (LC 1), 29=117 (LC 1), 31=117 (LC 1), 32=120 (LC 1), 33=40 (LC 1)

FORCES (lb) - Maximum Compression/Maximum Tension

TOP CHORD 1-33=-38/0, 16-17=-19/0, 1-2=-4/0, 2-3=-4/0, 3-4=-4/0, 4-5=-4/0, 5-6=-4/0, 6-7=-4/0, 7-8=-4/0, 8-9=-4/0, 9-10=-4/0, 10-11=-4/0, 11-12=-4/0, 12-14=-9/0, 14-15=-9/0, 15-16=-9/0
BOT CHORD 32-33=0/4, 31-32=0/4, 29-31=0/4, 28-29=0/4, 27-28=0/4, 26-27=0/4, 25-26=0/4, 24-25=0/4, 23-24=0/4, 22-23=0/4, 21-22=0/4, 20-21=0/4, 19-20=0/9, 18-19=0/9, 17-18=0/9
WEBS 2-32=-107/0, 3-31=-107/0, 4-29=-107/0, 5-28=-107/0, 6-27=-107/0, 7-26=-107/0, 8-25=-107/0, 9-24=-107/0, 10-23=-107/0, 11-22=-106/0, 12-21=-110/0, 13-20=-105/0, 14-19=-108/0, 15-18=-83/0

NOTES

1) All plates are 1.5x3 MT20 unless otherwise indicated.
2) Gable requires continuous bottom chord bearing.
3) Truss to be fully sheathed from one face or securely braced against lateral movement (i.e. diagonal web).
4) Gable studs spaced at 1-4-0 oc.
5) Recommend 2x6 strongbacks, on edge, spaced at 10-00-00 oc and fastened to each truss with 3-10d (0.131" X 3") nails. Strongbacks to be attached to walls at their outer ends or restrained by other means.
6) CAUTION, Do not erect truss backwards.

LOAD CASE(S) Standard

April 1,2025

WARNING - Verify design parameters and READ NOTES ON THIS AND INCLUDED MITEK REFERENCE PAGE MII-7473 rev. 1/2/2023 BEFORE USE.
Design valid for use only with MiTek® connectors. This design is based only upon parameters shown, and is for an individual building component, not a truss system. Before use, the building designer must verify the applicability of design parameters and properly incorporate this design into the overall building design. Bracing indicated is to prevent buckling of individual truss web and/or chord members only. Additional temporary and permanent bracing is always required for stability and to prevent collapse with possible personal injury and property damage. For general guidance regarding the fabrication, storage, delivery, erection and bracing of trusses and truss systems, see **ANSI/TPI1 Quality Criteria and DSB-22** available from Truss Plate Institute (www.tpinst.org) and **BCSI Building Component Safety Information** available from the Structural Building Component Association (www.sbcacomponents.com)

ENGINEERING BY TRENCO A MiTek Affiliate
818 Soundside Road
Edenton, NC 27932

Job	Truss	Truss Type	Qty	Ply	Install 34 Magnolia Acres-Crawl-Chatham FA MNR SP I72384849
25030166-02	F114	Floor	1	1	Job Reference (optional)

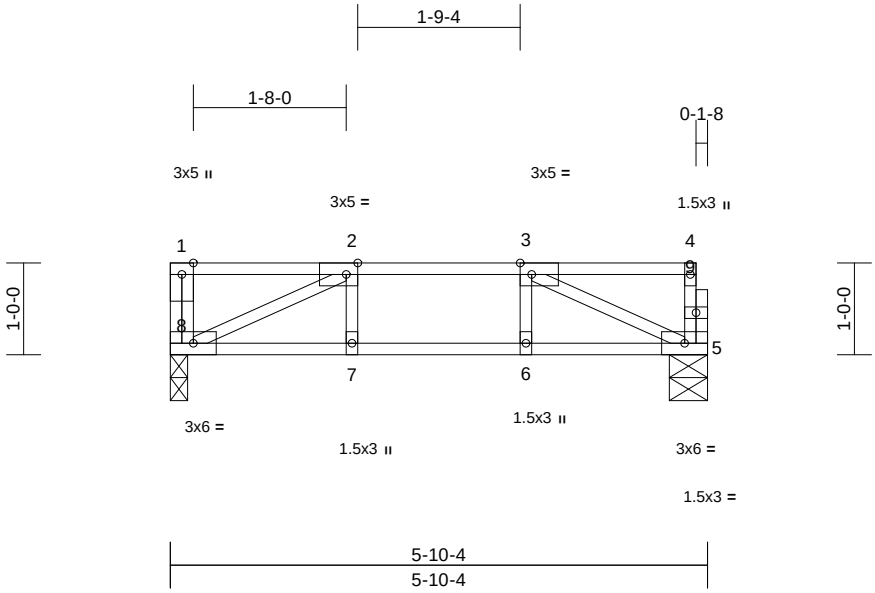

Scale = 1:25.1

Plate Offsets (X, Y): [2:0-1-8,Edge], [3:0-1-8,Edge]

Loading	(psf)	Spacing	1-7-3	CSI		DEFL	in	(loc)	l/defl	L/d	PLATES	GRIP
TCLL	40.0	Plate Grip DOL	1.00	TC	0.17	Vert(LL)	-0.02	7-8	>999	480	MT20	244/190
TCDL	10.0	Lumber DOL	1.00	BC	0.18	Vert(CT)	-0.02	7-8	>999	360		
BCLL	0.0	Rep Stress Incr	YES	WB	0.10	Horz(CT)	0.00	5	n/a	n/a		
BCDL	5.0	Code	IRC2021/TPI2014	Matrix-MSH							Weight: 29 lb	FT = 20%F, 11%E

LUMBER
TOP CHORD 2x4 SP No.2(flat)
BOT CHORD 2x4 SP No.2(flat)
WEBS 2x4 SP No.3(flat)
OTHERS 2x4 SP No.3(flat)

BRACING
TOP CHORD Structural wood sheathing directly applied or 5-10-4 oc purlins, except end verticals.
BOT CHORD Rigid ceiling directly applied or 10-0-0 oc bracing.

REACTIONS (size) 5=0-5-0, 8=0-2-4
Max Grav 5=241 (LC 1), 8=246 (LC 1)

FORCES (lb) - Maximum Compression/Maximum Tension
TOP CHORD 1-8=-66/0, 4-5=-63/0, 1-2=0/0, 2-3=-379/0, 3-4=-5/0
BOT CHORD 7-8=0/379, 6-7=0/379, 5-6=0/379
WEBS 3-5=-414/0, 2-8=-419/0, 2-7=-7/37, 3-6=-6/37

NOTES
1) Unbalanced floor live loads have been considered for this design.
2) Provide mechanical connection (by others) of truss to bearing plate at joint(s) 8.
3) Recommend 2x6 strongbacks, on edge, spaced at 10-00-00 oc and fastened to each truss with 3-10d (0.131" X 3") nails. Strongbacks to be attached to walls at their outer ends or restrained by other means.
4) CAUTION, Do not erect truss backwards.

LOAD CASE(S) Standard

April 1,2025

WARNING - Verify design parameters and READ NOTES ON THIS AND INCLUDED MITEK REFERENCE PAGE MII-7473 rev. 1/2/2023 BEFORE USE.
Design valid for use only with MiTek® connectors. This design is based only upon parameters shown, and is for an individual building component, not a truss system. Before use, the building designer must verify the applicability of design parameters and properly incorporate this design into the overall building design. Bracing indicated is to prevent buckling of individual truss web and/or chord members only. Additional temporary and permanent bracing is always required for stability and to prevent collapse with possible personal injury and property damage. For general guidance regarding the fabrication, storage, delivery, erection and bracing of trusses and truss systems, see **ANSI/TPI1 Quality Criteria and DSB-22** available from Truss Plate Institute (www.tpinst.org) and **BCSI Building Component Safety Information** available from the Structural Building Component Association (www.sbcacomponents.com)

ENGINEERING BY TRENCO A MiTek Affiliate
818 Soundside Road
Edenton, NC 27932

Job	Truss	Truss Type	Qty	Ply	Install 34 Magnolia Acres-Crawl-Chatham FA MNR SP I72384850
25030166-02	F113	Floor	1	1	Job Reference (optional)

Carter Components (Sanford, NC), Sanford, NC - 27332,

Run: 8.73 S Feb 19 2025 Print: 8.730 S Feb 19 2025 MiTek Industries, Inc. Sun Mar 30 12:22:30 Page: 1
ID:9HF0er6LuSmFJD5BgxVgBazmHNl-RfC?PsB70Hq3NSgPqnL8w3uITXbGKWrCDoi7J4zJC?f

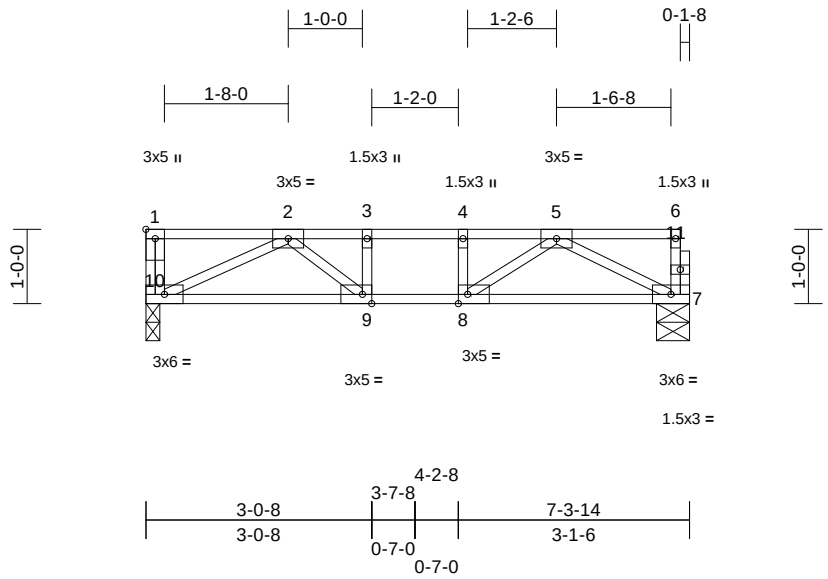

Scale = 1:31

Plate Offsets (X, Y): [1:Edge,0-1-8], [8:0-1-8,Edge], [9:0-1-8,Edge]

Loading	(psf)	Spacing	1-7-3	CSI		DEFL	in	(loc)	l/defl	L/d	PLATES	GRIP
TCLL	40.0	Plate Grip DOL	1.00	TC	0.14	Vert(LL)	-0.02	7-8	>999	480	MT20	244/190
TCDL	10.0	Lumber DOL	1.00	BC	0.20	Vert(CT)	-0.03	7-8	>999	360		
BCLL	0.0	Rep Stress Incr	YES	WB	0.13	Horz(CT)	0.01	7	n/a	n/a		
BCDL	5.0	Code	IRC2021/TPI2014	Matrix-MSH							Weight: 37 lb	FT = 20%F, 11%E

LUMBER

TOP CHORD 2x4 SP No.2(flat)
BOT CHORD 2x4 SP No.2(flat)
WEBS 2x4 SP No.3(flat)
OTHERS 2x4 SP No.3(flat)

BRACING

TOP CHORD Structural wood sheathing directly applied or 6-0-0 oc purlins, except end verticals.
BOT CHORD Rigid ceiling directly applied or 10-0-0 oc bracing.

REACTIONS (size) 7=0-5-5, 10=0-2-4
Max Grav 7=306 (LC 1), 10=311 (LC 1)

FORCES (lb) - Maximum Compression/Maximum Tension
TOP CHORD 1-10=-61/0, 6-7=-54/0, 1-2=0/0, 2-3=-617/0, 3-4=-617/0, 4-5=-617/0, 5-6=-4/0
BOT CHORD 9-10=0/491, 8-9=0/617, 7-8=0/463
WEBS 3-9=-110/0, 4-8=-102/0, 5-7=-519/0, 2-10=-547/0, 2-9=0/227, 5-8=0/237

NOTES

1) Unbalanced floor live loads have been considered for this design.
2) Provide mechanical connection (by others) of truss to bearing plate at joint(s) 10.
3) Recommend 2x6 strongbacks, on edge, spaced at 10-00-00 oc and fastened to each truss with 3-10d (0.131" X 3") nails. Strongbacks to be attached to walls at their outer ends or restrained by other means.
4) CAUTION, Do not erect truss backwards.

LOAD CASE(S) Standard

April 1,2025

WARNING - Verify design parameters and READ NOTES ON THIS AND INCLUDED MITEK REFERENCE PAGE MII-7473 rev. 1/2/2023 BEFORE USE.
Design valid for use only with MiTek® connectors. This design is based only upon parameters shown, and is for an individual building component, not a truss system. Before use, the building designer must verify the applicability of design parameters and properly incorporate this design into the overall building design. Bracing indicated is to prevent buckling of individual truss web and/or chord members only. Additional temporary and permanent bracing is always required for stability and to prevent collapse with possible personal injury and property damage. For general guidance regarding the fabrication, storage, delivery, erection and bracing of trusses and truss systems, see **ANSI/TPI1 Quality Criteria and DSB-22** available from Truss Plate Institute (www.tpinst.org) and **BCSI Building Component Safety Information** available from the Structural Building Component Association (www.sbcacomponents.com)

ENGINEERING BY TRENCO A MiTek Affiliate
818 Soundside Road
Edenton, NC 27932

Job	Truss	Truss Type	Qty	Ply	Install 34 Magnolia Acres-Crawl-Chatham FA MNR SP I72384851
25030166-02	F110	Floor Supported Gable	1	1	Job Reference (optional)

Carter Components (Sanford, NC), Sanford, NC - 27332, Run: 8.73 S Feb 19 2025 Print: 8.730 S Feb 19 2025 MiTek Industries, Inc. Sun Mar 30 12:22:30 Page: 1
ID:2K1y21MWxvPGKSBDPsNbX?zmHNQ-RfC?PsB70Hq3NSgPqnL8w3uITXbGKWrCDoi7J4zJC?f

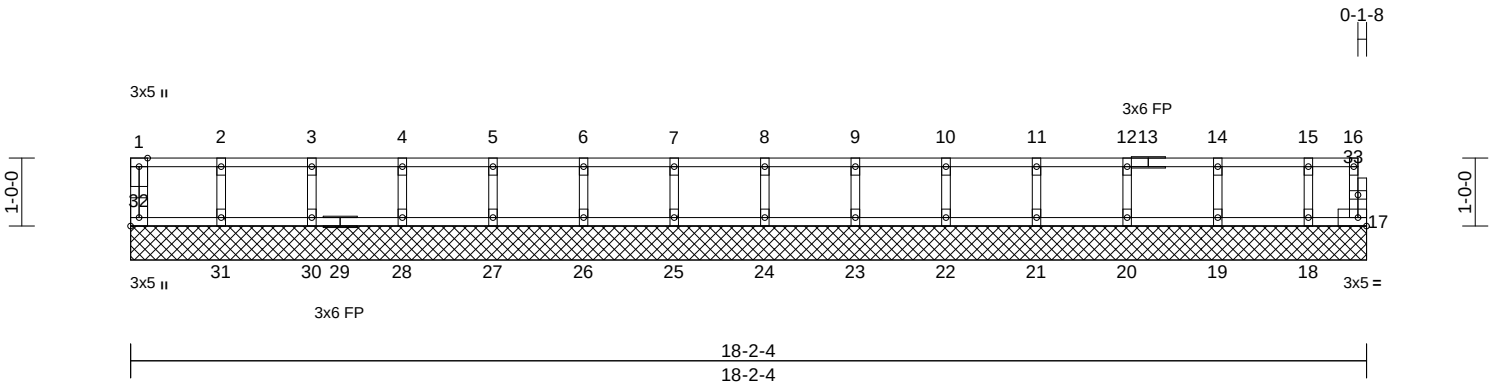

Scale = 1:33.9

Plate Offsets (X, Y): [32:Edge,0-1-8]

Loading	(psf)	Spacing	1-7-3	CSI		DEFL	in	(loc)	l/defl	L/d	PLATES	GRIP
TCLL	40.0	Plate Grip DOL	1.00	TC	0.06	Vert(LL)	n/a	-	n/a	999	MT20	244/190
TCDL	10.0	Lumber DOL	1.00	BC	0.01	Vert(TL)	n/a	-	n/a	999		
BCLL	0.0	Rep Stress Incr	YES	WB	0.03	Horiz(TL)	0.00	17	n/a	n/a		
BCDL	5.0	Code	IRC2021/TPI2014	Matrix-MR							Weight: 73 lb	FT = 20%F, 11%E

LUMBER

TOP CHORD 2x4 SP No.2(flat)
BOT CHORD 2x4 SP No.2(flat)
WEBS 2x4 SP No.3(flat)
OTHERS 2x4 SP No.3(flat)

BRACING

TOP CHORD Structural wood sheathing directly applied or 6-0-0 oc purlins, except end verticals.
BOT CHORD Rigid ceiling directly applied or 10-0-0 oc bracing.

REACTIONS (size) 17=18-2-4, 18=18-2-4, 19=18-2-4, 20=18-2-4, 21=18-2-4, 22=18-2-4, 23=18-2-4, 24=18-2-4, 25=18-2-4, 26=18-2-4, 27=18-2-4, 28=18-2-4, 30=18-2-4, 31=18-2-4, 32=18-2-4
Max Grav 17=22 (LC 1), 18=92 (LC 1), 19=122 (LC 1), 20=116 (LC 1), 21=118 (LC 1), 22=117 (LC 1), 23=117 (LC 1), 24=117 (LC 1), 25=117 (LC 1), 26=117 (LC 1), 27=117 (LC 1), 28=117 (LC 1), 30=117 (LC 1), 31=118 (LC 1), 32=47 (LC 1)

FORCES (lb) - Maximum Compression/Maximum Tension

TOP CHORD 1-32=-44/0, 16-17=-17/0, 1-2=-6/0, 2-3=-6/0, 3-4=-6/0, 4-5=-6/0, 5-6=-6/0, 6-7=-6/0, 7-8=-6/0, 8-9=-6/0, 9-10=-6/0, 10-11=-6/0, 11-12=-6/0, 12-14=-6/0, 14-15=-6/0, 15-16=-6/0
BOT CHORD 31-32=0/6, 30-31=0/6, 28-30=0/6, 27-28=0/6, 26-27=0/6, 25-26=0/6, 24-25=0/6, 23-24=0/6, 22-23=0/6, 21-22=0/6, 20-21=0/6, 19-20=0/6, 18-19=0/6, 17-18=0/6
WEBS 2-31=-106/0, 3-30=-107/0, 4-28=-107/0, 5-27=-107/0, 6-26=-107/0, 7-25=-107/0, 8-24=-107/0, 9-23=-107/0, 10-22=-107/0, 11-21=-107/0, 12-20=-106/0, 14-19=-111/0, 15-18=-87/0

NOTES

1) All plates are 1.5x3 MT20 unless otherwise indicated.
2) Gable requires continuous bottom chord bearing.
3) Truss to be fully sheathed from one face or securely braced against lateral movement (i.e. diagonal web).
4) Gable studs spaced at 1-4-0 oc.
5) Recommend 2x6 strongbacks, on edge, spaced at 10-00-00 oc and fastened to each truss with 3-10d (0.131" X 3") nails. Strongbacks to be attached to walls at their outer ends or restrained by other means.
6) CAUTION, Do not erect truss backwards.

LOAD CASE(S) Standard

April 1,2025

WARNING - Verify design parameters and READ NOTES ON THIS AND INCLUDED MITEK REFERENCE PAGE MII-7473 rev. 1/2/2023 BEFORE USE.
Design valid for use only with MiTek® connectors. This design is based only upon parameters shown, and is for an individual building component, not a truss system. Before use, the building designer must verify the applicability of design parameters and properly incorporate this design into the overall building design. Bracing indicated is to prevent buckling of individual truss web and/or chord members only. Additional temporary and permanent bracing is always required for stability and to prevent collapse with possible personal injury and property damage. For general guidance regarding the fabrication, storage, delivery, erection and bracing of trusses and truss systems, see **ANSI/TPI1 Quality Criteria and DSB-22** available from Truss Plate Institute (www.tpinst.org) and **BCSI Building Component Safety Information** available from the Structural Building Component Association (www.sbcacomponents.com)

ENGINEERING BY TRENCO A MiTek Affiliate
818 Soundside Road
Edenton, NC 27932

Job	Truss	Truss Type	Qty	Ply	Install 34 Magnolia Acres-Crawl-Chatham FA MNR SP I72384852
25030166-02	F111	Floor Supported Gable	1	1	Job Reference (optional)

Carter Components (Sanford, NC), Sanford, NC - 27332, Run: 8.73 S Feb 19 2025 Print: 8.730 S Feb 19 2025 MiTek Industries, Inc. Sun Mar 30 12:22:30 Page: 1
ID:dlLpQ?Kee_1hT_TejjpuwNzmHNT-RfC?PsB70Hq3NSgPqnL8w3uITXbGKWrCDoi7J4zJC?f

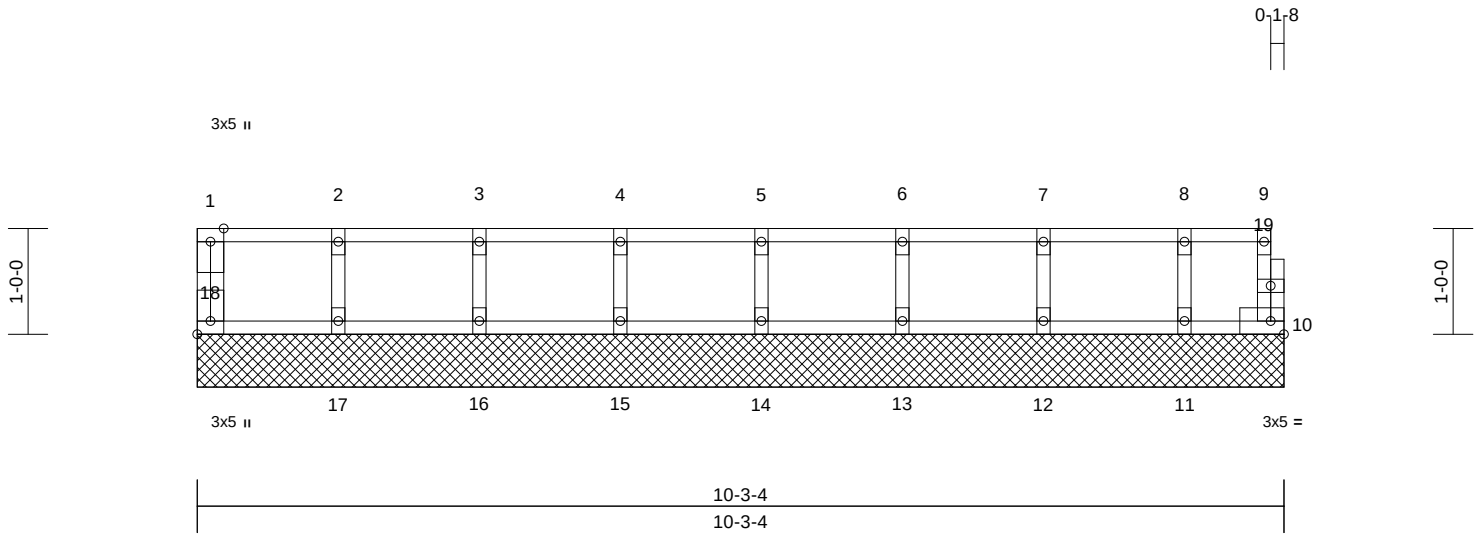

Scale = 1:21.8

Plate Offsets (X, Y): [18:Edge,0-1-8]

Loading	(psf)	Spacing	1-7-3	CSI		DEFL	in	(loc)	l/defl	L/d	PLATES	GRIP
TCLL	40.0	Plate Grip DOL	1.00	TC	0.06	Vert(LL)	n/a	-	n/a	999	MT20	244/190
TCDL	10.0	Lumber DOL	1.00	BC	0.01	Vert(TL)	n/a	-	n/a	999		
BCLL	0.0	Rep Stress Incr	YES	WB	0.02	Horiz(TL)	0.00	10	n/a	n/a		
BCDL	5.0	Code	IRC2021/TPI2014	Matrix-MR							Weight: 42 lb	FT = 20%F, 11%E

LUMBER
TOP CHORD 2x4 SP No.2(flat)
BOT CHORD 2x4 SP No.2(flat)
WEBS 2x4 SP No.3(flat)
OTHERS 2x4 SP No.3(flat)

BRACING
TOP CHORD Structural wood sheathing directly applied or 6-0-0 oc purlins, except end verticals.
BOT CHORD Rigid ceiling directly applied or 10-0-0 oc bracing.

REACTIONS (size) 10=10-3-4, 11=10-3-4, 12=10-3-4, 13=10-3-4, 14=10-3-4, 15=10-3-4, 16=10-3-4, 17=10-3-4, 18=10-3-4
Max Grav 10=27 (LC 1), 11=95 (LC 1), 12=122 (LC 1), 13=116 (LC 1), 14=118 (LC 1), 15=117 (LC 1), 16=117 (LC 1), 17=118 (LC 1), 18=47 (LC 1)

FORCES (lb) - Maximum Compression/Maximum Tension
TOP CHORD 1-18=-44/0, 9-10=-22/0, 1-2=-7/0, 2-3=-7/0, 3-4=-7/0, 4-5=-7/0, 5-6=-7/0, 6-7=-7/0, 7-8=-7/0, 8-9=-7/0
BOT CHORD 17-18=0/7, 16-17=0/7, 15-16=0/7, 14-15=0/7, 13-14=0/7, 12-13=0/7, 11-12=0/7, 10-11=0/7
WEBS 2-17=-106/0, 3-16=-107/0, 4-15=-106/0, 5-14=-107/0, 6-13=-106/0, 7-12=-110/0, 8-11=-89/0

NOTES
1) All plates are 1.5x3 MT20 unless otherwise indicated.
2) Gable requires continuous bottom chord bearing.
3) Truss to be fully sheathed from one face or securely braced against lateral movement (i.e. diagonal web).
4) Gable studs spaced at 1-4-0 oc.
5) Recommend 2x6 strongbacks, on edge, spaced at 10-00-00 oc and fastened to each truss with 3-10d (0.131" X 3") nails. Strongbacks to be attached to walls at their outer ends or restrained by other means.
6) CAUTION, Do not erect truss backwards.

LOAD CASE(S) Standard

April 1,2025

WARNING - Verify design parameters and READ NOTES ON THIS AND INCLUDED MITEK REFERENCE PAGE MII-7473 rev. 1/2/2023 BEFORE USE.
Design valid for use only with MiTek® connectors. This design is based only upon parameters shown, and is for an individual building component, not a truss system. Before use, the building designer must verify the applicability of design parameters and properly incorporate this design into the overall building design. Bracing indicated is to prevent buckling of individual truss web and/or chord members only. Additional temporary and permanent bracing is always required for stability and to prevent collapse with possible personal injury and property damage. For general guidance regarding the fabrication, storage, delivery, erection and bracing of trusses and truss systems, see **ANSI/TPI1 Quality Criteria and DSB-22** available from Truss Plate Institute (www.tpinst.org) and **BCSI Building Component Safety Information** available from the Structural Building Component Association (www.sbcacomponents.com)

ENGINEERING BY TRENCO A MiTek Affiliate
818 Soundside Road
Edenton, NC 27932

Job	Truss	Truss Type	Qty	Ply	Install 34 Magnolia Acres-Crawl-Chatham FA MNR SP I72384853
25030166-02	F119	Floor Supported Gable	1	1	Job Reference (optional)

Carter Components (Sanford, NC), Sanford, NC - 27332, Run: 8.73 S Feb 19 2025 Print: 8.730 S Feb 19 2025 MiTek Industries, Inc. Sun Mar 30 12:22:30 Page: 1
ID:k0SC2KAjbLqUpi5biS1xKNzVlP0-RfC?PsB70Hq3NSgPqnL8w3uITXbGKWrCDoi7J4zJC?f

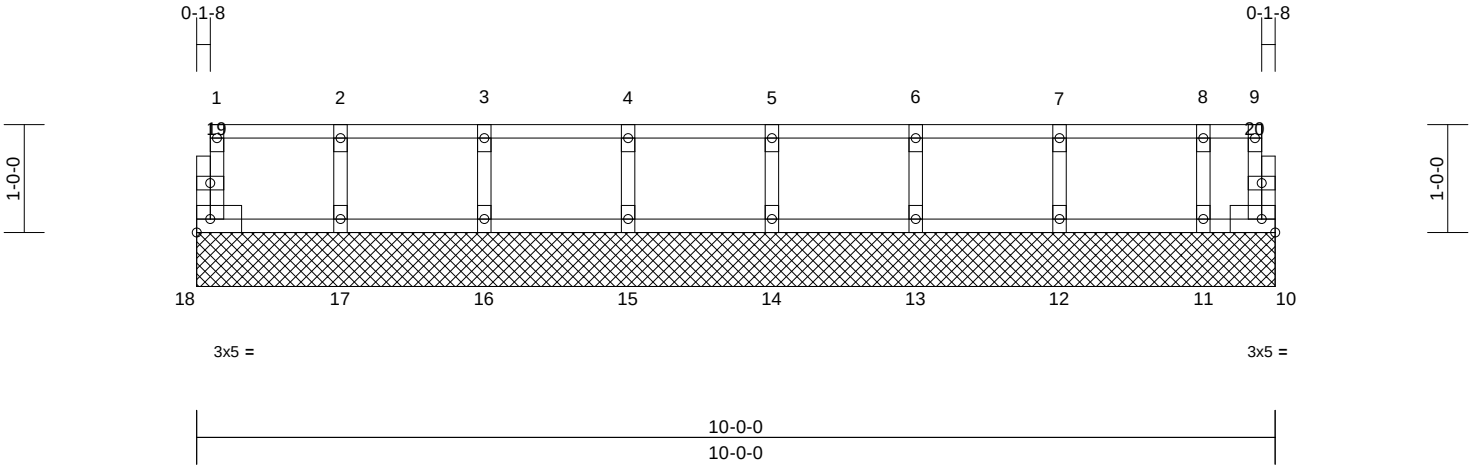

Scale = 1:21.4

Loading	(psf)	Spacing	2-0-0	CSI		DEFL	in	(loc)	l/defl	L/d	PLATES	GRIP
TCLL	40.0	Plate Grip DOL	1.00	TC	0.08	Vert(LL)	n/a	-	n/a	999	MT20	244/190
TCDL	10.0	Lumber DOL	1.00	BC	0.02	Vert(TL)	n/a	-	n/a	999		
BCLL	0.0	Rep Stress Incr	YES	WB	0.03	Horiz(TL)	0.00	10	n/a	n/a		
BCDL	5.0	Code	IRC2021/TPI2014	Matrix-MR							Weight: 41 lb	FT = 20%F, 11%E

LUMBER
TOP CHORD 2x4 SP No.2(flat)
BOT CHORD 2x4 SP No.2(flat)
WEBS 2x4 SP No.3(flat)
OTHERS 2x4 SP No.3(flat)

BRACING
TOP CHORD Structural wood sheathing directly applied or 6-0-0 oc purlins, except end verticals.
BOT CHORD Rigid ceiling directly applied or 10-0-0 oc bracing.

REACTIONS (size) 10=10-0-0, 11=10-0-0, 12=10-0-0, 13=10-0-0, 14=10-0-0, 15=10-0-0, 16=10-0-0, 17=10-0-0, 18=10-0-0
Max Grav 10=16 (LC 1), 11=106 (LC 1), 12=153 (LC 1), 13=145 (LC 1), 14=147 (LC 1), 15=147 (LC 1), 16=147 (LC 1), 17=148 (LC 1), 18=52 (LC 1)

FORCES (lb) - Maximum Compression/Maximum Tension
TOP CHORD 1-18=-49/0, 9-10=-8/0, 1-2=-8/0, 2-3=-8/0, 3-4=-8/0, 4-5=-8/0, 5-6=-8/0, 6-7=-8/0, 7-8=-8/0, 8-9=-8/0
BOT CHORD 17-18=0/8, 16-17=0/8, 15-16=0/8, 14-15=0/8, 13-14=0/8, 12-13=0/8, 11-12=0/8, 10-11=0/8
WEBS 2-17=-132/0, 3-16=-134/0, 4-15=-133/0, 5-14=-134/0, 6-13=-132/0, 7-12=-139/0, 8-11=-103/0

NOTES
1) All plates are 1.5x3 MT20 unless otherwise indicated.
2) Gable requires continuous bottom chord bearing.
3) Truss to be fully sheathed from one face or securely braced against lateral movement (i.e. diagonal web).
4) Gable studs spaced at 1-4-0 oc.
5) Recommend 2x6 strongbacks, on edge, spaced at 10-00-00 oc and fastened to each truss with 3-10d (0.131" X 3") nails. Strongbacks to be attached to walls at their outer ends or restrained by other means.

LOAD CASE(S) Standard

April 1,2025

WARNING - Verify design parameters and READ NOTES ON THIS AND INCLUDED MITEK REFERENCE PAGE MII-7473 rev. 1/2/2023 BEFORE USE.
Design valid for use only with MiTek® connectors. This design is based only upon parameters shown, and is for an individual building component, not a truss system. Before use, the building designer must verify the applicability of design parameters and properly incorporate this design into the overall building design. Bracing indicated is to prevent buckling of individual truss web and/or chord members only. Additional temporary and permanent bracing is always required for stability and to prevent collapse with possible personal injury and property damage. For general guidance regarding the fabrication, storage, delivery, erection and bracing of trusses and truss systems, see **ANSI/TPI1 Quality Criteria and DSB-22** available from Truss Plate Institute (www.tpinst.org) and **BCSI Building Component Safety Information** available from the Structural Building Component Association (www.sbcacomponents.com)

ENGINEERING BY TRENCO A MiTek Affiliate
818 Soundside Road
Edenton, NC 27932

Job	Truss	Truss Type	Qty	Ply	Install 34 Magnolia Acres-Crawl-Chatham FA MNR SP I72384854
25030166-02	F117	Floor Supported Gable	1	1	Job Reference (optional)

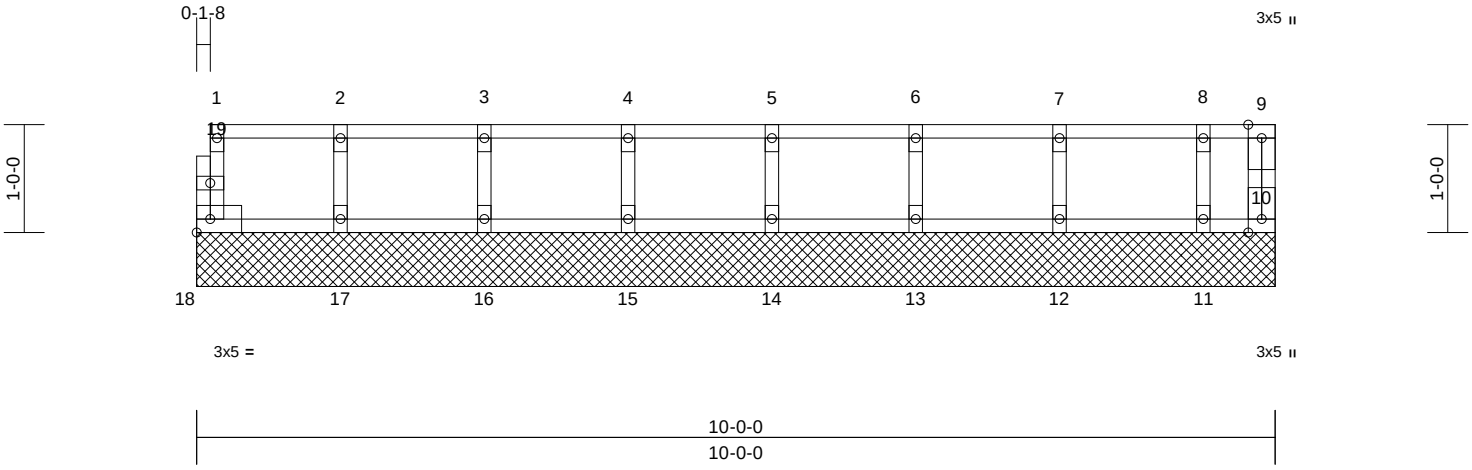

Scale = 1:21.4

Loading	(psf)	Spacing	2-0-0	CSI		DEFL	in	(loc)	l/defl	L/d	PLATES	GRIP
TCLL	40.0	Plate Grip DOL	1.00	TC	0.08	Vert(LL)	n/a	-	n/a	999	MT20	244/190
TCDL	10.0	Lumber DOL	1.00	BC	0.02	Vert(TL)	n/a	-	n/a	999		
BCLL	0.0	Rep Stress Incr	YES	WB	0.03	Horiz(TL)	0.00	10	n/a	n/a		
BCDL	5.0	Code	IRC2021/TPI2014	Matrix-MR							Weight: 42 lb	FT = 20%F, 11%E

LUMBER
TOP CHORD 2x4 SP No.2(flat)
BOT CHORD 2x4 SP No.2(flat)
WEBS 2x4 SP No.3(flat)
OTHERS 2x4 SP No.3(flat)

BRACING
TOP CHORD Structural wood sheathing directly applied or 6-0-0 oc purlins, except end verticals.
BOT CHORD Rigid ceiling directly applied or 10-0-0 oc bracing.

REACTIONS (size) 10=10-0-0, 11=10-0-0, 12=10-0-0, 13=10-0-0, 14=10-0-0, 15=10-0-0, 16=10-0-0, 17=10-0-0, 18=10-0-0
Max Grav 10=22 (LC 1), 11=106 (LC 1), 12=153 (LC 1), 13=145 (LC 1), 14=147 (LC 1), 15=147 (LC 1), 16=147 (LC 1), 17=148 (LC 1), 18=52 (LC 1)

FORCES (lb) - Maximum Compression/Maximum Tension
TOP CHORD 1-18=-49/0, 9-10=-14/0, 1-2=-8/0, 2-3=-8/0, 3-4=-8/0, 4-5=-8/0, 5-6=-8/0, 6-7=-8/0, 7-8=-8/0, 8-9=-8/0
BOT CHORD 17-18=0/8, 16-17=0/8, 15-16=0/8, 14-15=0/8, 13-14=0/8, 12-13=0/8, 11-12=0/8, 10-11=0/8
WEBS 2-17=-132/0, 3-16=-134/0, 4-15=-133/0, 5-14=-134/0, 6-13=-132/0, 7-12=-139/0, 8-11=-103/0

LOAD CASE(S) Standard

NOTES
1) All plates are 1.5x3 MT20 unless otherwise indicated.
2) Gable requires continuous bottom chord bearing.
3) Truss to be fully sheathed from one face or securely braced against lateral movement (i.e. diagonal web).
4) Gable studs spaced at 1-4-0 oc.
5) Recommend 2x6 strongbacks, on edge, spaced at 10-00-00 oc and fastened to each truss with 3-10d (0.131" X 3") nails. Strongbacks to be attached to walls at their outer ends or restrained by other means.
6) CAUTION, Do not erect truss backwards.

April 1,2025

WARNING - Verify design parameters and READ NOTES ON THIS AND INCLUDED MITEK REFERENCE PAGE MII-7473 rev. 1/2/2023 BEFORE USE.
Design valid for use only with MiTek® connectors. This design is based only upon parameters shown, and is for an individual building component, not a truss system. Before use, the building designer must verify the applicability of design parameters and properly incorporate this design into the overall building design. Bracing indicated is to prevent buckling of individual truss web and/or chord members only. Additional temporary and permanent bracing is always required for stability and to prevent collapse with possible personal injury and property damage. For general guidance regarding the fabrication, storage, delivery, erection and bracing of trusses and truss systems, see **ANSI/TPI1 Quality Criteria and DSB-22** available from Truss Plate Institute (www.tpinst.org) and **BCSI Building Component Safety Information** available from the Structural Building Component Association (www.sbcacomponents.com)

ENGINEERING BY TRENCO A MiTek Affiliate
818 Soundside Road
Edenton, NC 27932

Job	Truss	Truss Type	Qty	Ply	Install 34 Magnolia Acres-Crawl-Chatham FA MNR SP I72384855
25030166-02	F112	Floor	2	1	Job Reference (optional)

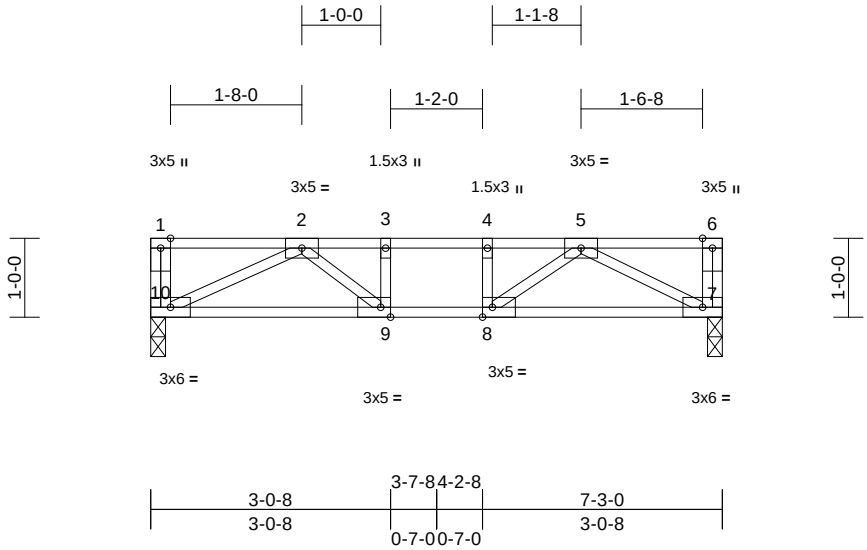

Scale = 1:29.2

Plate Offsets (X, Y): [8:0-1-8,Edge], [9:0-1-8,Edge]

Loading	(psf)	Spacing	1-7-3	CSI		DEFL	in	(loc)	l/defl	L/d	PLATES	GRIP
TCLL	40.0	Plate Grip DOL	1.00	TC	0.14	Vert(LL)	-0.02	7-8	>999	480	MT20	244/190
TCDL	10.0	Lumber DOL	1.00	BC	0.19	Vert(CT)	-0.02	7-8	>999	360		
BCLL	0.0	Rep Stress Incr	YES	WB	0.13	Horz(CT)	0.01	7	n/a	n/a		
BCDL	5.0	Code	IRC2021/TPI2014	Matrix-MSH							Weight: 37 lb	FT = 20%F, 11%E

LUMBER
TOP CHORD 2x4 SP No.2(flat)
BOT CHORD 2x4 SP No.2(flat)
WEBS 2x4 SP No.3(flat)

BRACING
TOP CHORD Structural wood sheathing directly applied or 6-0-0 oc purlins, except end verticals.
BOT CHORD Rigid ceiling directly applied or 10-0-0 oc bracing.

REACTIONS (size) 7=0-2-4, 10=0-2-4
Max Grav 7=308 (LC 1), 10=308 (LC 1)

FORCES (lb) - Maximum Compression/Maximum Tension
TOP CHORD 1-10=-61/0, 6-7=-56/0, 1-2=0/0, 2-3=-604/0, 3-4=-604/0, 4-5=-604/0, 5-6=0/0
BOT CHORD 9-10=0/485, 8-9=0/604, 7-8=0/459
WEBS 3-9=-106/0, 4-8=-105/0, 5-7=-519/0, 2-10=-539/0, 2-9=0/220, 5-8=0/232

NOTES
1) Unbalanced floor live loads have been considered for this design.
2) Provide mechanical connection (by others) of truss to bearing plate at joint(s) 10, 7.
3) Recommend 2x6 strongbacks, on edge, spaced at 10-00-00 oc and fastened to each truss with 3-10d (0.131" X 3") nails. Strongbacks to be attached to walls at their outer ends or restrained by other means.

LOAD CASE(S) Standard

April 1,2025

WARNING - Verify design parameters and READ NOTES ON THIS AND INCLUDED MITEK REFERENCE PAGE MII-7473 rev. 1/2/2023 BEFORE USE.
Design valid for use only with MiTek® connectors. This design is based only upon parameters shown, and is for an individual building component, not a truss system. Before use, the building designer must verify the applicability of design parameters and properly incorporate this design into the overall building design. Bracing indicated is to prevent buckling of individual truss web and/or chord members only. Additional temporary and permanent bracing is always required for stability and to prevent collapse with possible personal injury and property damage. For general guidance regarding the fabrication, storage, delivery, erection and bracing of trusses and truss systems, see **ANSI/TPI1 Quality Criteria and DSB-22** available from Truss Plate Institute (www.tpinst.org) and **BCSI Building Component Safety Information** available from the Structural Building Component Association (www.sbcacomponents.com)

ENGINEERING BY TRENCO A MiTek Affiliate
818 Soundside Road
Edenton, NC 27932

Job	Truss	Truss Type	Qty	Ply	Install 34 Magnolia Acres-Crawl-Chatham FA MNR SP I72384856
25030166-02	F214	Floor	2	1	Job Reference (optional)

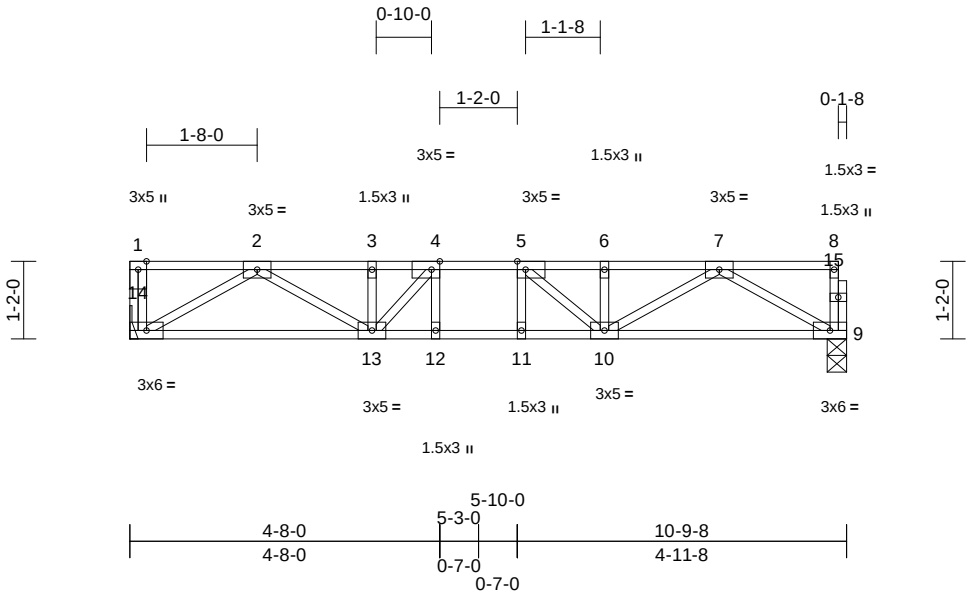

Scale = 1:34.7

Plate Offsets (X, Y): [4:0-1-8,Edge], [5:0-1-8,Edge]

Loading	(psf)	Spacing	2-0-0	CSI		DEFL	in	(loc)	l/defl	L/d	PLATES	GRIP
TCLL	40.0	Plate Grip DOL	1.00	TC	0.22	Vert(LL)	-0.05	11	>999	480	MT20	244/190
TCDL	10.0	Lumber DOL	1.00	BC	0.47	Vert(CT)	-0.07	11-12	>999	360		
BCLL	0.0	Rep Stress Incr	YES	WB	0.27	Horz(CT)	0.02	9	n/a	n/a		
BCDL	5.0	Code	IRC2021/TPI2014	Matrix-MSH							Weight: 58 lb	FT = 20%F, 11%E

LUMBER
TOP CHORD 2x4 SP No.2(flat)
BOT CHORD 2x4 SP No.2(flat)
WEBS 2x4 SP No.3(flat)
OTHERS 2x4 SP No.3(flat)

BRACING
TOP CHORD Structural wood sheathing directly applied or 6-0-0 oc purlins, except end verticals.
BOT CHORD Rigid ceiling directly applied or 10-0-0 oc bracing.

REACTIONS (size) 9=0-3-8, 14= Mechanical
Max Grav 9=574 (LC 1), 14=580 (LC 1)

FORCES (lb) - Maximum Compression/Maximum Tension
TOP CHORD 1-14=-72/0, 8-9=-70/0, 1-2=0/0, 2-3=-1320/0, 3-4=-1320/0, 4-5=-1447/0, 5-6=-1326/0, 6-7=-1326/0, 7-8=-4/0
BOT CHORD 13-14=0/847, 12-13=0/1447, 11-12=0/1447, 10-11=0/1447, 9-10=0/845
WEBS 4-12=-63/81, 5-11=-70/57, 2-14=-980/0, 2-13=0/552, 3-13=-158/30, 4-13=-337/26, 7-9=-972/0, 7-10=0/561, 6-10=-175/5, 5-10=-308/30

NOTES
1) Unbalanced floor live loads have been considered for this design.
2) Refer to girder(s) for truss to truss connections.
3) Recommend 2x6 strongbacks, on edge, spaced at 10-00-00 oc and fastened to each truss with 3-10d (0.131" X 3") nails. Strongbacks to be attached to walls at their outer ends or restrained by other means.
4) CAUTION, Do not erect truss backwards.

LOAD CASE(S) Standard

April 1,2025

WARNING - Verify design parameters and READ NOTES ON THIS AND INCLUDED MITEK REFERENCE PAGE MII-7473 rev. 1/2/2023 BEFORE USE.
Design valid for use only with MiTek® connectors. This design is based only upon parameters shown, and is for an individual building component, not a truss system. Before use, the building designer must verify the applicability of design parameters and properly incorporate this design into the overall building design. Bracing indicated is to prevent buckling of individual truss web and/or chord members only. Additional temporary and permanent bracing is always required for stability and to prevent collapse with possible personal injury and property damage. For general guidance regarding the fabrication, storage, delivery, erection and bracing of trusses and truss systems, see **ANSI/TPI1 Quality Criteria and DSB-22** available from Truss Plate Institute (www.tpinst.org) and **BCSI Building Component Safety Information** available from the Structural Building Component Association (www.sbcacomponents.com)

ENGINEERING BY TRENCO A MiTek Affiliate
818 Soundside Road
Edenton, NC 27932

Job	Truss	Truss Type	Qty	Ply	Install 34 Magnolia Acres-Crawl-Chatham FA MNR SP I72384857
25030166-02	F102	Floor	3	1	Job Reference (optional)

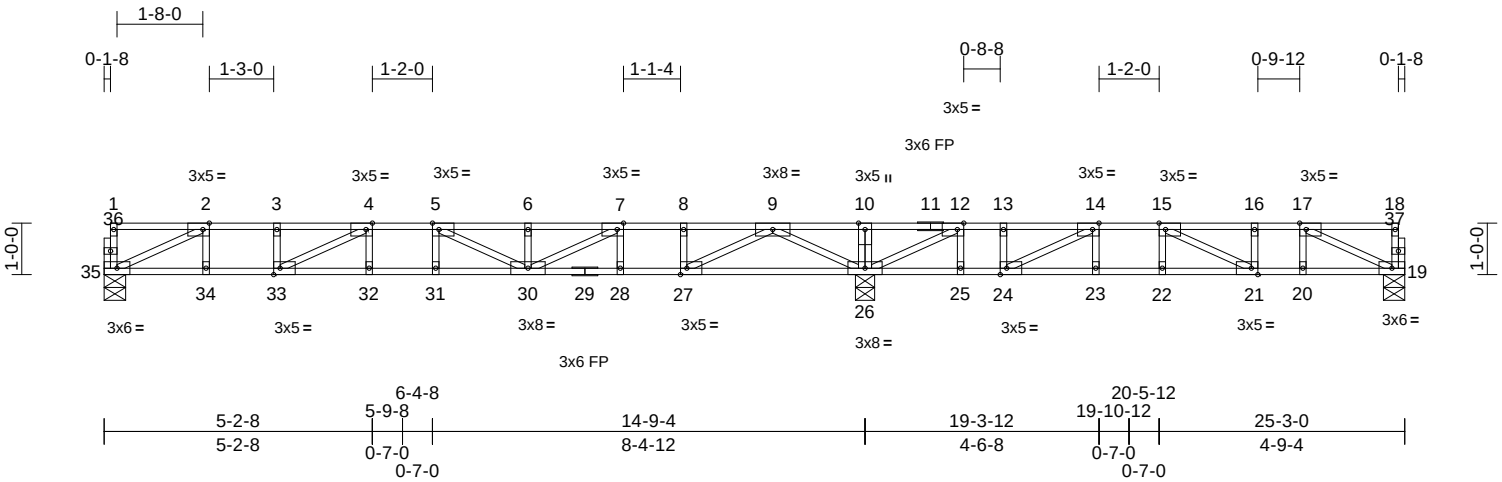

Scale = 1:44.7

Plate Offsets (X, Y): [2:0-1-8,Edge], [4:0-1-8,Edge], [5:0-1-8,Edge], [7:0-1-8,Edge], [12:0-1-8,Edge], [14:0-1-8,Edge], [15:0-1-8,Edge], [17:0-1-8,Edge], [21:0-1-8,Edge], [24:0-1-8,Edge], [27:0-1-8,Edge], [33:0-1-8,Edge]

Loading	(psf)	Spacing	1-7-3	CSI		DEFL	in	(loc)	l/defl	L/d	PLATES	GRIP
TCLL	40.0	Plate Grip DOL	1.00	TC	0.85	Vert(LL)	-0.24	28-30	>748	480	MT20	244/190
TCDL	10.0	Lumber DOL	1.00	BC	0.95	Vert(CT)	-0.32	28-30	>555	360		
BCLL	0.0	Rep Stress Incr	YES	WB	0.67	Horz(CT)	0.03	19	n/a	n/a		
BCDL	5.0	Code	IRC2021/TPI2014	Matrix-MSH							Weight: 123 lb	FT = 20%F, 11%E

LUMBER

TOP CHORD 2x4 SP No.2(flat)
BOT CHORD 2x4 SP No.1(flat)
WEBS 2x4 SP No.3(flat)
OTHERS 2x4 SP No.3(flat)

BRACING

TOP CHORD Structural wood sheathing directly applied or 6-0-0 oc purlins, except end verticals.
BOT CHORD Rigid ceiling directly applied or 2-2-0 oc bracing.

REACTIONS (size) 19=0-5-0, 26=0-4-8, 35=0-5-0
Max Grav 19=385 (LC 4), 26=1349 (LC 1), 35=554 (LC 3)

FORCES (lb) - Maximum Compression/Maximum Tension

TOP CHORD 1-35=-24/46, 18-19=-51/5, 1-2=-2/3, 2-3=-1279/0, 3-4=-1279/0, 4-5=-2012/0, 5-6=-1957/0, 6-7=-1957/0, 7-8=-1134/0, 8-9=-1134/0, 9-10=0/1727, 10-12=0/1727, 12-13=-313/868, 13-14=-313/868, 14-15=-976/344, 15-16=-769/51, 16-17=-769/51, 17-18=-4/0

BOT CHORD 34-35=0/1279, 33-34=0/1279, 32-33=0/2012, 31-32=0/2012, 30-31=0/2012, 28-30=0/1134, 27-28=0/1134, 26-27=-476/0, 25-26=-868/313, 24-25=-868/313, 23-24=-344/976, 22-23=-344/976, 21-22=-344/976, 20-21=-51/769, 19-20=-51/769

WEBS 4-32=-3/147, 5-31=-86/69, 10-26=-148/0, 14-23=0/212, 15-22=-130/0, 4-33=-816/0, 2-35=-1414/0, 2-34=0/252, 3-33=-1/147, 9-26=-1550/0, 5-30=-395/105, 9-27=0/1414, 6-30=-256/0, 8-27=-399/0, 7-30=0/1022, 7-28=-277/0, 14-24=-1067/0, 12-26=-1426/0, 12-25=0/313, 13-24=0/190, 15-21=-230/327, 17-19=-847/57, 16-21=-101/0, 17-20=-20/129

NOTES

1) Unbalanced floor live loads have been considered for this design.
2) All plates are 1.5x3 MT20 unless otherwise indicated.
3) Recommend 2x6 strongbacks, on edge, spaced at 10-00-00 oc and fastened to each truss with 3-10d (0.131" X 3") nails. Strongbacks to be attached to walls at their outer ends or restrained by other means.
4) CAUTION, Do not erect truss backwards.

LOAD CASE(S) Standard

April 1,2025

WARNING - Verify design parameters and READ NOTES ON THIS AND INCLUDED MITEK REFERENCE PAGE MII-7473 rev. 1/2/2023 BEFORE USE.
Design valid for use only with MiTek® connectors. This design is based only upon parameters shown, and is for an individual building component, not a truss system. Before use, the building designer must verify the applicability of design parameters and properly incorporate this design into the overall building design. Bracing indicated is to prevent buckling of individual truss web and/or chord members only. Additional temporary and permanent bracing is always required for stability and to prevent collapse with possible personal injury and property damage. For general guidance regarding the fabrication, storage, delivery, erection and bracing of trusses and truss systems, see **ANSI/TPI1 Quality Criteria and DSB-22** available from Truss Plate Institute (www.tpinst.org) and **BCSI Building Component Safety Information** available from the Structural Building Component Association (www.sbcacomponents.com)

ENGINEERING BY TRENCO A MiTek Affiliate
818 Soundside Road
Edenton, NC 27932

Job	Truss	Truss Type	Qty	Ply	Install 34 Magnolia Acres-Crawl-Chatham FA MNR SP I72384858
25030166-02	F103	Floor	7	1	Job Reference (optional)

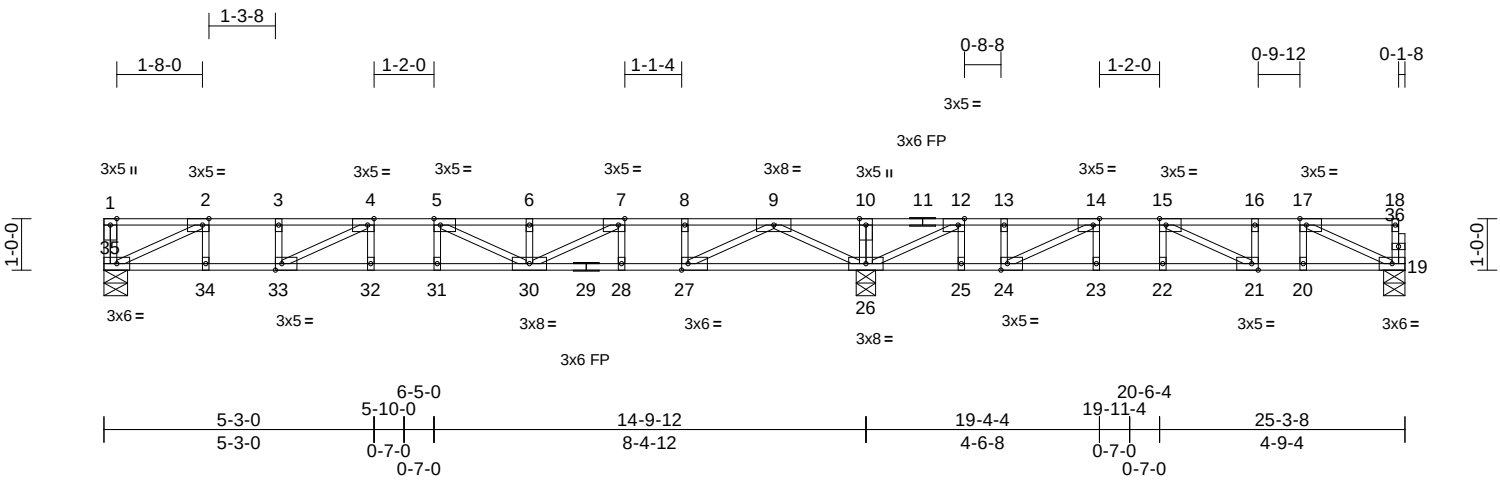

Scale = 1:44.8

Plate Offsets (X, Y): [2:0-1-8,Edge], [4:0-1-8,Edge], [5:0-1-8,Edge], [7:0-1-8,Edge], [12:0-1-8,Edge], [14:0-1-8,Edge], [15:0-1-8,Edge], [17:0-1-8,Edge], [21:0-1-8,Edge], [24:0-1-8,Edge], [27:0-1-8,Edge], [33:0-1-8,Edge]

Loading	(psf)	Spacing	1-7-3	CSI		DEFL	in	(loc)	l/defl	L/d	PLATES	GRIP
TCLL	40.0	Plate Grip DOL	1.00	TC	0.86	Vert(LL)	-0.24	28-30	>738	480	MT20	244/190
TCDL	10.0	Lumber DOL	1.00	BC	0.97	Vert(CT)	-0.32	32-33	>547	360		
BCLL	0.0	Rep Stress Incr	YES	WB	0.68	Horz(CT)	0.03	19	n/a	n/a		
BCDL	5.0	Code	IRC2021/TPI2014	Matrix-MSH							Weight: 123 lb	FT = 20%F, 11%E

LUMBER

TOP CHORD 2x4 SP No.2(flat)
BOT CHORD 2x4 SP No.1(flat)
WEBS 2x4 SP No.3(flat)
OTHERS 2x4 SP No.3(flat)

BRACING

TOP CHORD Structural wood sheathing directly applied or 6-0-0 oc purlins, except end verticals.
BOT CHORD Rigid ceiling directly applied or 2-2-0 oc bracing.

REACTIONS (size) 19=0-5-0, 26=0-4-8, 35=0-5-8
Max Grav 19=384 (LC 4), 26=1354 (LC 1), 35=559 (LC 3)

FORCES (lb) - Maximum Compression/Maximum Tension

TOP CHORD 1-35=-27/45, 18-19=-51/5, 1-2=0/0, 2-3=-1288/0, 3-4=-1288/0, 4-5=-2020/0, 5-6=-1955/0, 6-7=-1955/0, 7-8=-1125/0, 8-9=-1125/0, 9-10=0/1749, 10-12=0/1749, 12-13=-309/886, 13-14=-309/886, 14-15=-973/356, 15-16=-768/56, 16-17=-768/56, 17-18=-4/0

BOT CHORD 34-35=0/1288, 33-34=0/1288, 32-33=0/2020, 31-32=0/2020, 30-31=0/2020, 28-30=0/1125, 27-28=0/1125, 26-27=-491/0, 25-26=-886/309, 24-25=-886/309, 23-24=-356/973, 22-23=-356/973, 21-22=-356/973, 20-21=-56/768, 19-20=-56/768

WEBS 4-32=-3/147, 5-31=-85/70, 10-26=-148/0, 14-23=0/213, 15-22=-132/0, 4-33=-815/0, 2-35=-1424/0, 2-34=0/255, 3-33=-2/146, 9-26=-1557/0, 5-30=-402/99, 9-27=0/1423, 6-30=-256/0, 8-27=-402/0, 7-30=0/1030, 7-28=-279/0, 14-24=-1074/0, 12-26=-1431/0, 12-25=0/315, 13-24=0/192, 15-21=-228/335, 17-19=-846/63, 16-21=-103/0, 17-20=-22/129

NOTES

1) Unbalanced floor live loads have been considered for this design.
2) All plates are 1.5x3 MT20 unless otherwise indicated.
3) Recommend 2x6 strongbacks, on edge, spaced at 10-00-00 oc and fastened to each truss with 3-10d (0.131" X 3") nails. Strongbacks to be attached to walls at their outer ends or restrained by other means.
4) CAUTION, Do not erect truss backwards.

LOAD CASE(S) Standard

April 1,2025

WARNING - Verify design parameters and READ NOTES ON THIS AND INCLUDED MITEK REFERENCE PAGE MII-7473 rev. 1/2/2023 BEFORE USE.
Design valid for use only with MiTek® connectors. This design is based only upon parameters shown, and is for an individual building component, not a truss system. Before use, the building designer must verify the applicability of design parameters and properly incorporate this design into the overall building design. Bracing indicated is to prevent buckling of individual truss web and/or chord members only. Additional temporary and permanent bracing is always required for stability and to prevent collapse with possible personal injury and property damage. For general guidance regarding the fabrication, storage, delivery, erection and bracing of trusses and truss systems, see **ANSI/TPI1 Quality Criteria and DSB-22** available from Truss Plate Institute (www.tpinst.org) and **BCSI Building Component Safety Information** available from the Structural Building Component Association (www.sbcacomponents.com)

ENGINEERING BY TRENCO A MiTek Affiliate
818 Soundside Road
Edenton, NC 27932

Job	Truss	Truss Type	Qty	Ply	Install 34 Magnolia Acres-Crawl-Chatham FA MNR SP I72384859
25030166-02	F118	Floor	7	1	Job Reference (optional)

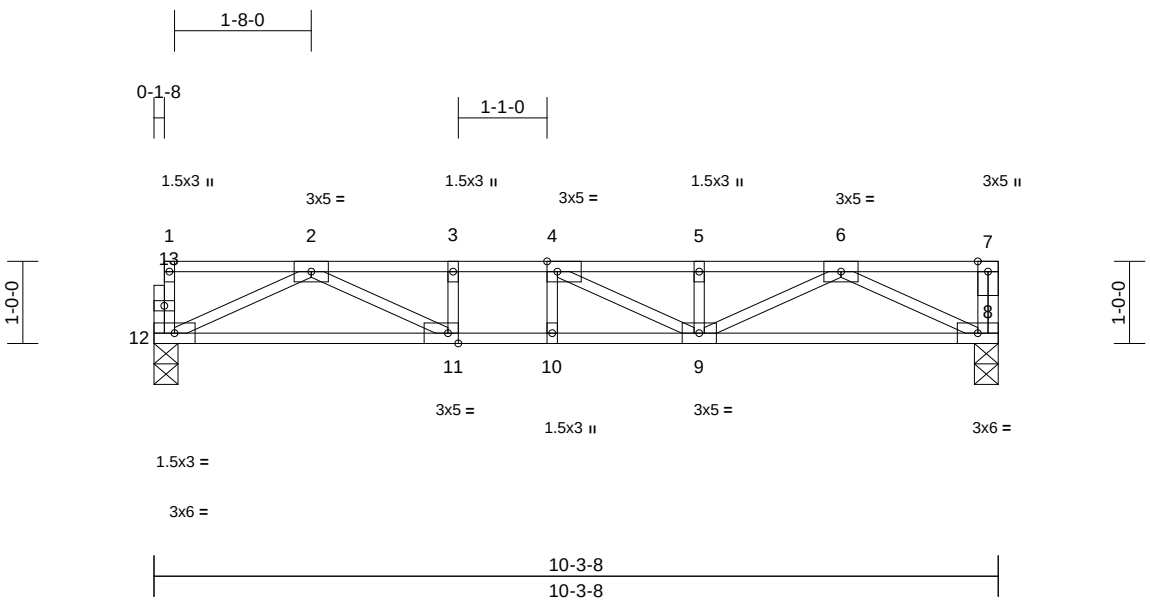

Scale = 1:28.1

Plate Offsets (X, Y): [4:0-1-8,Edge], [11:0-1-8,Edge]

Loading	(psf)	Spacing	2-0-0	CSI		DEFL	in	(loc)	l/defl	L/d	PLATES	GRIP
TCLL	40.0	Plate Grip DOL	1.00	TC	0.35	Vert(LL)	-0.08	9-10	>999	480	MT20	244/190
TCDL	10.0	Lumber DOL	1.00	BC	0.64	Vert(CT)	-0.10	9-10	>999	360		
BCLL	0.0	Rep Stress Incr	YES	WB	0.31	Horz(CT)	0.02	8	n/a	n/a		
BCDL	5.0	Code	IRC2021/TPI2014	Matrix-MSH							Weight: 52 lb	FT = 20%F, 11%E

LUMBER
TOP CHORD 2x4 SP No.2(flat)
BOT CHORD 2x4 SP No.2(flat)
WEBS 2x4 SP No.3(flat)
OTHERS 2x4 SP No.3(flat)

BRACING
TOP CHORD Structural wood sheathing directly applied or 6-0-0 oc purlins, except end verticals.
BOT CHORD Rigid ceiling directly applied or 10-0-0 oc bracing.

REACTIONS (size) 8=0-3-8, 12=0-3-8
Max Grav 8=552 (LC 1), 12=546 (LC 1)

FORCES (lb) - Maximum Compression/Maximum Tension
TOP CHORD 1-12=-74/0, 7-8=-75/0, 1-2=-5/0, 2-3=-1519/0, 3-4=-1519/0, 4-5=-1487/0, 5-6=-1487/0, 6-7=0/0
BOT CHORD 11-12=0/950, 10-11=0/1519, 9-10=0/1519, 8-9=0/948
WEBS 6-8=-1054/0, 2-12=-1051/0, 6-9=0/604, 2-11=0/656, 5-9=-218/0, 3-11=-208/0, 4-9=-261/131, 4-10=-98/16

NOTES
1) Unbalanced floor live loads have been considered for this design.
2) Recommend 2x6 strongbacks, on edge, spaced at 10-00-00 oc and fastened to each truss with 3-10d (0.131" X 3") nails. Strongbacks to be attached to walls at their outer ends or restrained by other means.
3) CAUTION, Do not erect truss backwards.

LOAD CASE(S) Standard

April 1,2025

WARNING - Verify design parameters and READ NOTES ON THIS AND INCLUDED MITEK REFERENCE PAGE MII-7473 rev. 1/2/2023 BEFORE USE.
Design valid for use only with MiTek® connectors. This design is based only upon parameters shown, and is for an individual building component, not a truss system. Before use, the building designer must verify the applicability of design parameters and properly incorporate this design into the overall building design. Bracing indicated is to prevent buckling of individual truss web and/or chord members only. Additional temporary and permanent bracing is always required for stability and to prevent collapse with possible personal injury and property damage. For general guidance regarding the fabrication, storage, delivery, erection and bracing of trusses and truss systems, see **ANSI/TPI1 Quality Criteria and DSB-22** available from Truss Plate Institute (www.tpinst.org) and **BCSI Building Component Safety Information** available from the Structural Building Component Association (www.sbcacomponents.com)

ENGINEERING BY TRENCO A MiTek Affiliate
818 Soundside Road
Edenton, NC 27932

Job	Truss	Truss Type	Qty	Ply	Install 34 Magnolia Acres-Crawl-Chatham FA MNR SP I72384860
25030166-02	F107	Floor	10	1	Job Reference (optional)

Carter Components (Sanford, NC), Sanford, NC - 27332,

Run: 8.73 S Feb 19 2025 Print: 8.730 S Feb 19 2025 MiTek Industries, Inc. Sun Mar 30 12:22:30 ID:lAXMDiiP4rIQwkDkP2dzAfzmIEV-RfC?PsB70Hq3NSgPqnL8w3uITXbGKWrCDoi7J4zJC?f

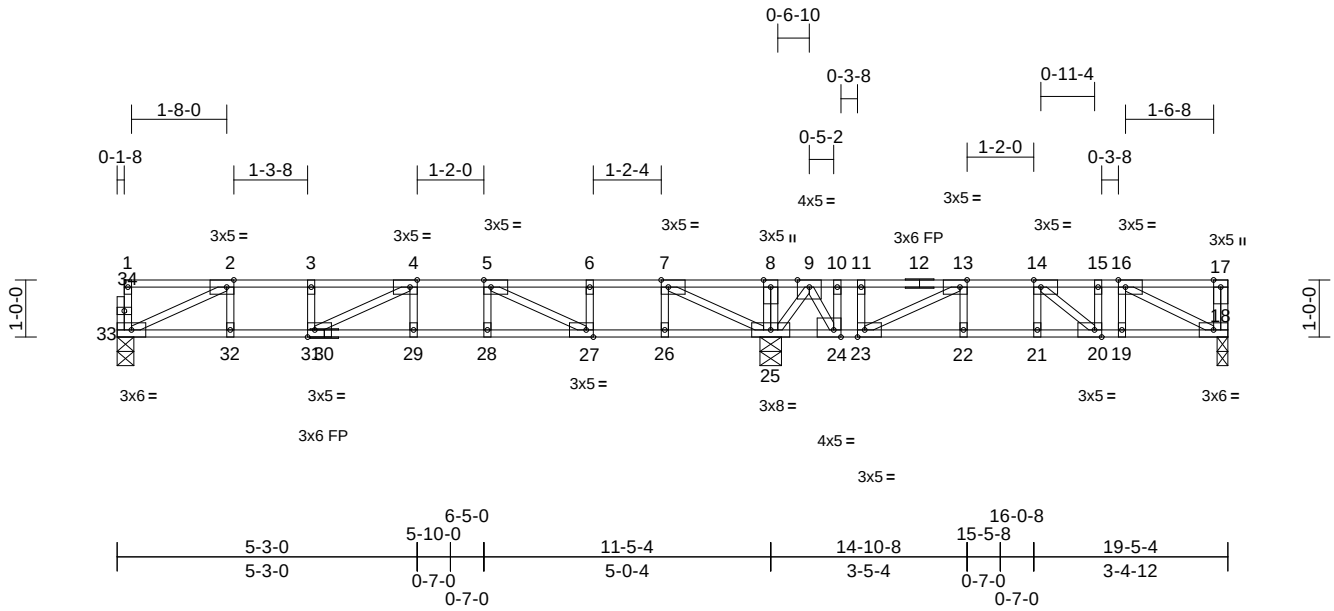

Scale = 1:40.3

Plate Offsets (X, Y): [2:0-1-8,Edge], [4:0-1-8,Edge], [5:0-1-8,Edge], [7:0-1-8,Edge], [13:0-1-8,Edge], [14:0-1-8,Edge], [16:0-1-8,Edge], [20:0-1-8,Edge], [23:0-1-8,Edge], [24:0-1-8,Edge], [27:0-1-8,Edge], [31:0-1-8,Edge]

Loading	(psf)	Spacing	1-7-3	CSI		DEFL	in	(loc)	l/defl	L/d	PLATES	GRIP
TCLL	40.0	Plate Grip DOL	1.00	TC	0.80	Vert(LL)	-0.15	29-31	>923	480	MT20	244/190
TCDL	10.0	Lumber DOL	1.00	BC	0.89	Vert(CT)	-0.20	29-31	>678	360		
BCLL	0.0	Rep Stress Incr	NO	WB	0.39	Horz(CT)	0.02	18	n/a	n/a		
BCDL	5.0	Code	IRC2021/TPI2014	Matrix-MSH							Weight: 98 lb	FT = 20%F, 11%E

LUMBER

TOP CHORD 2x4 SP No.1(flat) *Except* 12-17:2x4 SP No.2(flat)
BOT CHORD 2x4 SP No.2(flat) *Except* 30-18:2x4 SP No.1(flat)
WEBS 2x4 SP No.3(flat)
OTHERS 2x4 SP No.3(flat)

BRACING

TOP CHORD Structural wood sheathing directly applied or 6-0-0 oc purlins, except end verticals.
BOT CHORD Rigid ceiling directly applied or 6-0-0 oc bracing.

REACTIONS (size) 18=0-2-4, 25=0-4-8, 33=0-3-8
Max Grav 18=324 (LC 4), 25=1291 (LC 1), 33=437 (LC 3)

FORCES (lb) - Maximum Compression/Maximum Tension

TOP CHORD 1-33=-29/33, 17-18=-54/0, 1-2=-2/2, 2-3=-951/0, 3-4=-951/0, 4-5=-1282/0, 5-6=-538/69, 6-7=-538/69, 7-8=0/995, 8-9=0/995, 9-10=-278/412, 10-11=-278/412, 11-13=-278/412, 13-14=-680/108, 14-15=-531/0, 15-16=-531/0, 16-17=0/0
BOT CHORD 32-33=0/951, 31-32=0/951, 29-31=0/1282, 28-29=0/1282, 27-28=0/1282, 26-27=-69/538, 25-26=-69/538, 24-25=-561/0, 23-24=-412/278, 22-23=-108/680, 21-22=-108/680, 20-21=-108/680, 19-20=0/531, 18-19=0/531
WEBS 4-29=-48/54, 5-28=0/161, 8-25=-205/33, 13-22=0/111, 14-21=-97/20, 4-31=-368/0, 2-33=-1050/0, 2-32=0/153, 3-31=-33/78, 7-25=-1493/0, 5-27=-917/0, 6-27=0/176, 7-26=0/276, 13-23=-629/0, 9-25=-817/0, 11-23=-21/100, 9-24=0/817, 10-24=-396/0, 14-20=-192/152, 15-20=-45/57, 16-18=-595/0, 16-19=-7/78

NOTES

1) Unbalanced floor live loads have been considered for this design.
2) All plates are 1.5x3 MT20 unless otherwise indicated.
3) Provide mechanical connection (by others) of truss to bearing plate at joint(s) 18.
4) Recommend 2x6 strongbacks, on edge, spaced at 10-00-00 oc and fastened to each truss with 3-10d (0.131" X 3") nails. Strongbacks to be attached to walls at their outer ends or restrained by other means.
5) CAUTION, Do not erect truss backwards.

LOAD CASE(S) Standard

1) Dead + Floor Live (balanced): Lumber Increase=1.00, Plate Increase=1.00
Uniform Loads (lb/ft)
Vert: 18-33=-8, 1-17=-80
Concentrated Loads (lb)
Vert: 8=-150, 11=-150

April 1,2025

WARNING - Verify design parameters and READ NOTES ON THIS AND INCLUDED MITEK REFERENCE PAGE MII-7473 rev. 1/2/2023 BEFORE USE.
Design valid for use only with MiTek® connectors. This design is based only upon parameters shown, and is for an individual building component, not a truss system. Before use, the building designer must verify the applicability of design parameters and properly incorporate this design into the overall building design. Bracing indicated is to prevent buckling of individual truss web and/or chord members only. Additional temporary and permanent bracing is always required for stability and to prevent collapse with possible personal injury and property damage. For general guidance regarding the fabrication, storage, delivery, erection and bracing of trusses and truss systems, see **ANSI/TPI1 Quality Criteria and DSB-22** available from Truss Plate Institute (www.tpinst.org) and **BCSI Building Component Safety Information** available from the Structural Building Component Association (www.sbcacomponents.com)

ENGINEERING BY TRENCO A MiTek Affiliate
818 Soundside Road
Edenton, NC 27932

Job	Truss	Truss Type	Qty	Ply	Install 34 Magnolia Acres-Crawl-Chatham FA MNR SP I72384861
25030166-02	F109	Floor	11	1	Job Reference (optional)

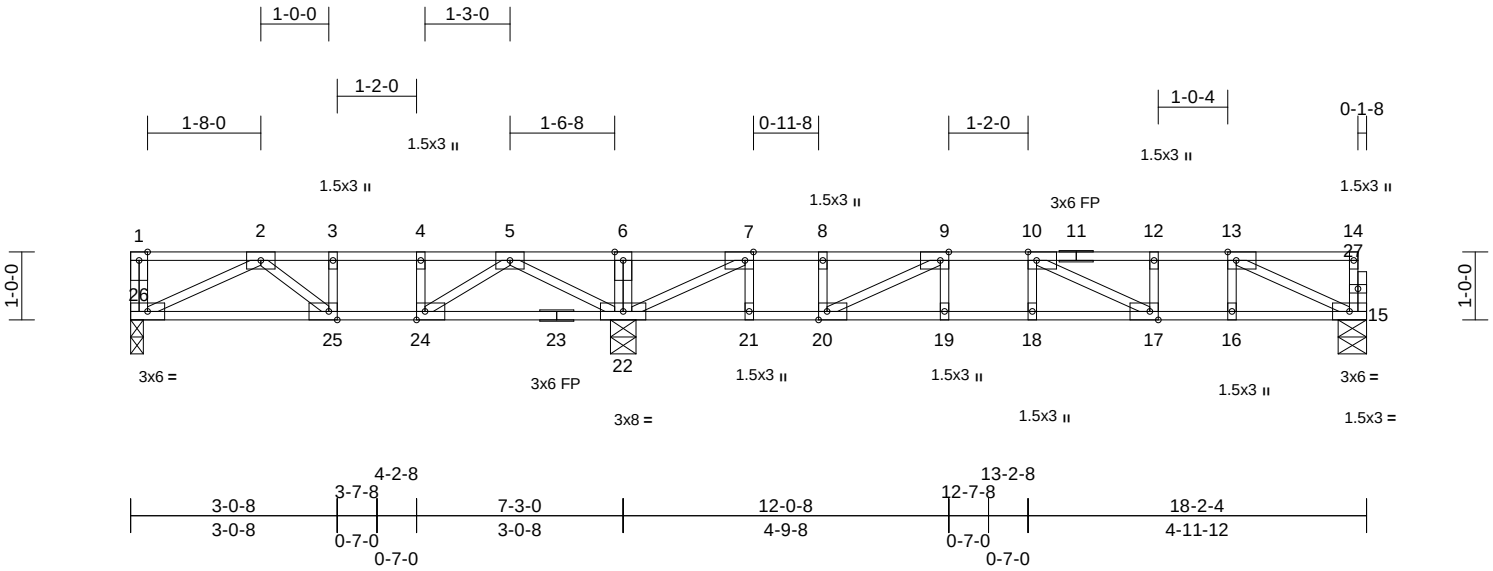

Scale = 1:33.9

Plate Offsets (X, Y): [7:0-1-8,Edge], [9:0-1-8,Edge], [10:0-1-8,Edge], [13:0-1-8,Edge], [17:0-1-8,Edge], [20:0-1-8,Edge], [24:0-1-8,Edge], [25:0-1-8,Edge]

Loading	(psf)	Spacing	1-7-3	CSI		DEFL	in	(loc)	l/defl	L/d	PLATES	GRIP
TCLL	40.0	Plate Grip DOL	1.00	TC	0.72	Vert(LL)	-0.12	17-18	>999	480	MT20	244/190
TCDL	10.0	Lumber DOL	1.00	BC	0.91	Vert(CT)	-0.16	17-18	>811	360		
BCLL	0.0	Rep Stress Incr	YES	WB	0.31	Horz(CT)	0.02	15	n/a	n/a		
BCDL	5.0	Code	IRC2021/TPI2014	Matrix-MSH							Weight: 89 lb	FT = 20%F, 11%E

LUMBER
TOP CHORD 2x4 SP No.2(flat)
BOT CHORD 2x4 SP No.2(flat)
WEBS 2x4 SP No.3(flat)
OTHERS 2x4 SP No.3(flat)

BRACING
TOP CHORD Structural wood sheathing directly applied or 6-0-0 oc purlins, except end verticals.
BOT CHORD Rigid ceiling directly applied or 10-0-0 oc bracing, Except:
6-0-0 oc bracing: 25-26,24-25,22-24.

REACTIONS (size) 15=0-5-0, 22=0-4-8, 26=0-2-4
Max Grav 15=423 (LC 4), 22=934 (LC 1), 26=275 (LC 3)

FORCES (lb) - Maximum Compression/Maximum Tension
TOP CHORD 1-26=-59/0, 14-15=-35/23, 1-2=0/0, 2-3=-474/114, 3-4=-474/114, 4-5=-474/114, 5-6=0/727, 6-7=0/727, 7-8=-545/0, 8-9=-545/0, 9-10=-1200/0, 10-12=-887/0, 12-13=-887/0, 13-14=-3/2
BOT CHORD 25-26=-22/417, 24-25=-114/474, 22-24=-331/231, 21-22=0/545, 20-21=0/545, 19-20=0/1200, 18-19=0/1200, 17-18=0/1200, 16-17=0/887, 15-16=0/887
WEBS 3-25=-42/62, 4-24=-182/0, 6-22=-109/0, 9-19=0/135, 10-18=-39/58, 5-22=-720/0, 9-20=-793/0, 7-22=-1286/0, 7-21=0/237, 8-20=0/151, 10-17=-365/0, 13-15=-979/0, 12-17=-24/76, 13-16=0/158, 2-26=-464/25, 2-25=-118/75, 5-24=0/442

NOTES
1) Unbalanced floor live loads have been considered for this design.
2) All plates are 3x5 MT20 unless otherwise indicated.
3) Provide mechanical connection (by others) of truss to bearing plate at joint(s) 26.
4) Recommend 2x6 strongbacks, on edge, spaced at 10-00-00 oc and fastened to each truss with 3-10d (0.131" X 3") nails. Strongbacks to be attached to walls at their outer ends or restrained by other means.
5) CAUTION, Do not erect truss backwards.

LOAD CASE(S) Standard

April 1,2025

WARNING - Verify design parameters and READ NOTES ON THIS AND INCLUDED MITEK REFERENCE PAGE MII-7473 rev. 1/2/2023 BEFORE USE.
Design valid for use only with MiTek® connectors. This design is based only upon parameters shown, and is for an individual building component, not a truss system. Before use, the building designer must verify the applicability of design parameters and properly incorporate this design into the overall building design. Bracing indicated is to prevent buckling of individual truss web and/or chord members only. Additional temporary and permanent bracing is always required for stability and to prevent collapse with possible personal injury and property damage. For general guidance regarding the fabrication, storage, delivery, erection and bracing of trusses and truss systems, see **ANSI/TPI1 Quality Criteria and DSB-22** available from Truss Plate Institute (www.tpinst.org) and **BCSI Building Component Safety Information** available from the Structural Building Component Association (www.sbcacomponents.com)

ENGINEERING BY TRENCO A MiTek Affiliate
818 Soundside Road
Edenton, NC 27932

Symbols

PLATE LOCATION AND ORIENTATION

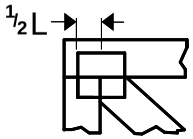

Center plate on joint unless x, y offsets are indicated. Dimensions are in ft-in-sixteenths. Apply plates to both sides of truss and fully embed teeth.

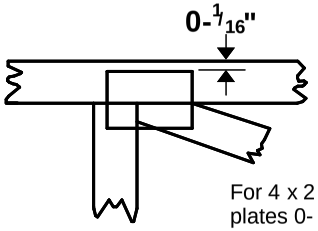

For 4 x 2 orientation, locate plates 0- 1/16" from outside edge of truss.

This symbol indicates the required direction of slots in connector plates.

* Plate location details available in MiTek software or upon request.

PLATE SIZE

4 x 4

The first dimension is the plate width measured perpendicular to slots. Second dimension is the length parallel to slots.

LATERAL BRACING LOCATION

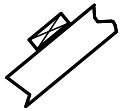

Indicated by symbol shown and/or by text in the bracing section of the output. Use T or I bracing if indicated.

BEARING

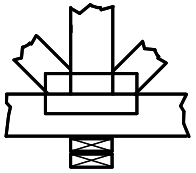

Indicates location where bearings (supports) occur. Icons vary but reaction section indicates joint number/letter where bearings occur. Min size shown is for crushing only.

Industry Standards:

ANSI/TPI1: National Design Specification for Metal Plate Connected Wood Truss Construction.
DSB-22: Design Standard for Bracing.
BCSI: Building Component Safety Information, Guide to Good Practice for Handling, Installing, Restraining & Bracing of Metal Plate Connected Wood Trusses.

Numbering System

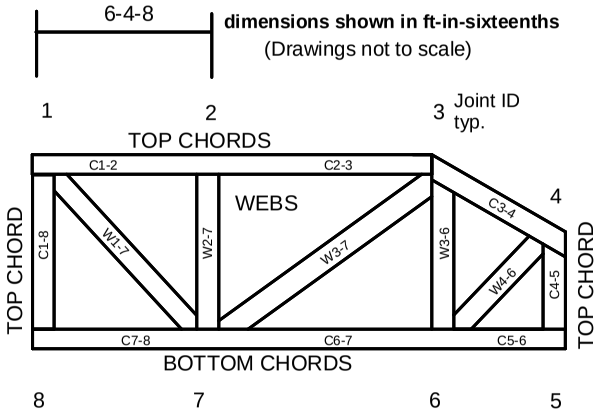

JOINTS ARE GENERALLY NUMBERED/LETTERED CLOCKWISE AROUND THE TRUSS STARTING AT THE JOINT FARTHEST TO THE LEFT.

CHORDS AND WEBS ARE IDENTIFIED BY END JOINT NUMBERS/LETTERS.

Product Code Approvals

ICC-ES Reports:

ESR-1988, ESR-2362, ESR-2685, ESR-3282
ESR-4722, ESL-1388

Design General Notes

Trusses are designed for wind loads in the plane of the truss unless otherwise shown.

Lumber design values are in accordance with ANSI/TPI 1 section 6.3 These truss designs rely on lumber values established by others.

© 2023 MiTek® All Rights Reserved

MiTek®

ENGINEERING BY TRENCO
A MiTek Affiliate

General Safety Notes

Failure to Follow Could Cause Property Damage or Personal Injury

1. Additional stability bracing for truss system, e.g. diagonal or X-bracing, is always required. See BCSI.
2. Truss bracing must be designed by an engineer. For wide truss spacing, individual lateral braces themselves may require bracing, or alternative Tor I bracing should be considered.
3. Never exceed the design loading shown and never stack materials on inadequately braced trusses.
4. Provide copies of this truss design to the building designer, erection supervisor, property owner and all other interested parties.
5. Cut members to bear tightly against each other.
6. Place plates on each face of truss at each joint and embed fully. Knots and wane at joint locations are regulated by ANSI/TPI 1.
7. Design assumes trusses will be suitably protected from the environment in accord with ANSI/TPI 1.
8. Unless otherwise noted, moisture content of lumber shall not exceed 19% at time of fabrication.
9. Unless expressly noted, this design is not applicable for use with fire retardant, preservative treated, or green lumber.
10. Camber is a non-structural consideration and is the responsibility of truss fabricator. General practice is to camber for dead load deflection.
11. Plate type, size, orientation and location dimensions indicated are minimum plating requirements.
12. Lumber used shall be of the species and size, and in all respects, equal to or better than that specified.
13. Top chords must be sheathed or purlins provided at spacing indicated on design.
14. Bottom chords require lateral bracing at 10 ft. spacing, or less, if no ceiling is installed, unless otherwise noted.
15. Connections not shown are the responsibility of others.
16. Do not cut or alter truss member or plate without prior approval of an engineer.
17. Install and load vertically unless indicated otherwise.
18. Use of green or treated lumber may pose unacceptable environmental, health or performance risks. Consult with project engineer before use.
19. Review all portions of this design (front, back, words and pictures) before use. Reviewing pictures alone is not sufficient.
20. Design assumes manufacture in accordance with ANSI/TPI 1 Quality Criteria.
21. The design does not take into account any dynamic or other loads other than those expressly stated.