ENGINEERING BY TRENCO
A MiTek Affiliate

RE: 4619354
JSJ, Magnolia Prime

Trenco
818 Soundside Rd
Edenton, NC 27932

Site Information:

Customer: JSJ Builders Project Name: 4619354
Lot/Block: 11 Model: MAGNOLIA PRIME
Address: Subdivision: ILAS WAY
City: Dunn State: NC

General Truss Engineering Criteria & Design Loads (Individual Truss Design Drawings Show Special Loading Conditions):

Design Code: IRC2015/TPI2014 Design Program: MiTek 20/20 8.6
Wind Code: ASCE 7-10 Wind Speed: 130 mph
Roof Load: 40.0 psf Floor Load: N/A psf

This package includes 20 individual, dated Truss Design Drawings and 0 Additional Drawings.

No.	Seal#	Truss Name	Date
1	I70941779	A01	1/24/2025
2	I70941780	A02	1/24/2025
3	I70941781	A03	1/24/2025
4	I70941782	A04	1/24/2025
5	I70941783	B01	1/24/2025
6	I70941784	B02	1/24/2025
7	I70941785	C01	1/24/2025
8	I70941786	C02	1/24/2025
9	I70941787	D01	1/24/2025
10	I70941788	E01	1/24/2025
11	I70941789	E02	1/24/2025
12	I70941790	E03	1/24/2025
13	I70941791	G01	1/24/2025
14	I70941792	G02	1/24/2025
15	I70941793	H01	1/24/2025
16	I70941794	H02	1/24/2025
17	I70941795	V01	1/24/2025
18	I70941796	V02	1/24/2025
19	I70941797	V03	1/24/2025
20	I70941798	V04	1/24/2025

The truss drawing(s) referenced above have been prepared by
Truss Engineering Co. under my direct supervision
based on the parameters provided by Builders FirstSource-Sumter,SC.

Truss Design Engineer's Name: Pace, Adam

My license renewal date for the state of North Carolina is December 31, 2025.

North Carolina COA: C-0844

IMPORTANT NOTE: The seal on these truss component designs is a certification that the engineer named is licensed in the jurisdiction(s) identified and that the designs comply with ANSI/TPI 1. These designs are based upon parameters shown (e.g., loads, supports, dimensions, shapes and design codes), which were given to TRENCO. Any project specific information included is for TRENCO customers file reference purpose only, and was not taken into account in the preparation of these designs. TRENCO has not independently verified the applicability of the design parameters or the designs for any particular building. Before use, the building designer should verify applicability of design parameters and properly incorporate these designs into the overall building design per ANSI/TPI 1, Chapter 2.

NORTH CAROLINA PROFESSIONAL SEAL 037887 ENGINEER ADAM PACE

January 24, 2025

Pace, Adam

Job	Truss	Truss Type	Qty	Ply	JSJ, Magnolia Prime
4619354	A01	Common Supported Gable	1	1	Job Reference (optional) I70941779

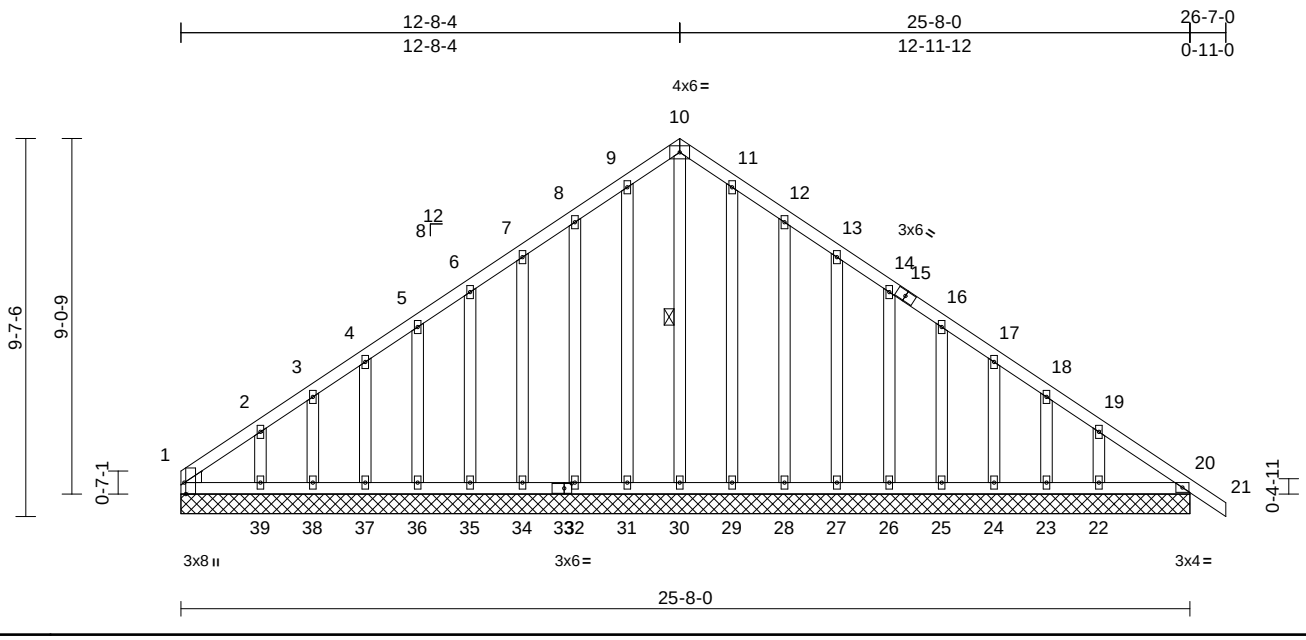

Scale = 1:58.6

Plate Offsets (X, Y): [1:0-3-8,Edge], [33:0-2-4,0-1-8]

Loading	(psf)	Spacing	2-0-0	CSI		DEFL	in	(loc)	l/defl	L/d	PLATES	GRIP
TCLL (roof)	20.0	Plate Grip DOL	1.15	TC	0.08	Vert(LL)	n/a	-	n/a	999	MT20	244/190
TCDL	10.0	Lumber DOL	1.15	BC	0.08	Vert(CT)	n/a	-	n/a	999		
BCLL	0.0*	Rep Stress Incr	YES	WB	0.12	Horz(CT)	0.01	20	n/a	n/a		
BCDL	10.0	Code	IRC2015/TPI2014	Matrix-MS							Weight: 206 lb	FT = 20%

LUMBER

TOP CHORD 2x4 SP No.2
BOT CHORD 2x4 SP No.2
OTHERS 2x4 SP No.3
WEDGE Left: 2x4 SP No.3

BRACING

TOP CHORD Structural wood sheathing directly applied or 6-0-0 oc purlins.
BOT CHORD Rigid ceiling directly applied or 10-0-0 oc bracing.
WEBS 1 Row at midpt 10-30

REACTIONS (size) 1=25-8-0, 20=25-8-0, 22=25-8-0, 23=25-8-0, 24=25-8-0, 25=25-8-0, 26=25-8-0, 27=25-8-0, 28=25-8-0, 29=25-8-0, 30=25-8-0, 31=25-8-0, 32=25-8-0, 34=25-8-0, 35=25-8-0, 36=25-8-0, 37=25-8-0, 38=25-8-0, 39=25-8-0, 40=25-8-0, 44=25-8-0
Max Horiz 1=-302 (LC 8), 40=-302 (LC 8)
Max Uplift 1=-100 (LC 10), 20=-16 (LC 9), 22=-115 (LC 13), 23=-52 (LC 13), 24=-72 (LC 13), 25=-68 (LC 13), 26=-68 (LC 13), 27=-68 (LC 13), 28=-81 (LC 13), 29=-36 (LC 13), 30=-13 (LC 11), 31=-44 (LC 12), 32=-78 (LC 12), 34=-68 (LC 12), 35=-69 (LC 12), 36=-67 (LC 12), 37=-76 (LC 12), 38=-36 (LC 12), 39=-164 (LC 12), 40=-100 (LC 10), 44=-16 (LC 9)
Max Grav 1=172 (LC 9), 20=156 (LC 1), 22=193 (LC 20), 23=94 (LC 20), 24=126 (LC 20), 25=119 (LC 20), 26=121 (LC 20), 27=120 (LC 20), 28=124 (LC 20), 29=117 (LC 20), 30=237 (LC 13), 31=126 (LC 19), 32=120 (LC 19), 34=120 (LC 19), 35=121 (LC 19), 36=119 (LC 19), 37=128 (LC 19), 38=88 (LC 1), 39=216 (LC 19), 40=172 (LC 9), 44=156 (LC 1)

FORCES (lb) - Maximum Compression/Maximum Tension

TOP CHORD 1-2=-272/228, 2-3=-207/186, 3-4=-180/173, 4-5=-165/158, 5-6=-149/158, 6-7=-134/190, 7-8=-169/221, 8-9=-219/258, 9-10=-245/286, 10-11=-245/286, 11-12=-219/253, 12-13=-169/194, 13-14=-126/142, 14-16=-82/89, 16-17=-67/57, 17-18=-79/67, 18-19=-121/81, 19-20=-199/145, 20-21=0/31
BOT CHORD 1-39=-156/232, 38-39=-148/232, 37-38=-148/232, 36-37=-148/232, 35-36=-148/232, 34-35=-148/232, 32-34=-148/232, 31-32=-148/232, 30-31=-148/232, 29-30=-148/232, 28-29=-148/232, 27-28=-148/232, 26-27=-148/232, 25-26=-148/232, 24-25=-148/232, 23-24=-148/232, 22-23=-148/232, 20-22=-148/232
WEBS 10-30=-230/158, 9-31=-100/60, 8-32=-116/94, 7-34=-105/84, 6-35=-105/84, 5-36=-105/84, 4-37=-108/87, 3-38=-92/71, 2-39=-151/129, 11-29=-90/52, 12-28=-116/97, 13-27=-105/84, 14-26=-105/84, 16-25=-105/84, 17-24=-109/86, 18-23=-90/74, 19-22=-167/118

NOTES

1) Unbalanced roof live loads have been considered for this design.
2) Wind: ASCE 7-10; Vult=130mph (3-second gust) Vasd=103mph; TCDL=6.0psf; BCDL=6.0psf; h=25ft; Cat. II; Exp C; Enclosed; MWFRS (envelope) exterior zone and C-C Exterior (2) zone; cantilever left and right exposed ; end vertical left and right exposed;C-C for members and forces & MWFRS for reactions shown; Lumber DOL=1.60 plate grip DOL=1.60
3) Truss designed for wind loads in the plane of the truss only. For studs exposed to wind (normal to the face), see Standard Industry Gable End Details as applicable, or consult qualified building designer as per ANSI/TPI 1.
4) All plates are 2x4 MT20 unless otherwise indicated.
5) Gable requires continuous bottom chord bearing.
6) Gable studs spaced at 1-4-0 oc.
7) This truss has been designed for a 10.0 psf bottom chord live load nonconcurrent with any other live loads.
8) * This truss has been designed for a live load of 20.0psf on the bottom chord in all areas where a rectangle 3-06-00 tall by 2-00-00 wide will fit between the bottom chord and any other members.

January 24,2025

Continued on page 2

WARNING - Verify design parameters and READ NOTES ON THIS AND INCLUDED MITEK REFERENCE PAGE MII-7473 rev. 1/2/2023 BEFORE USE.
Design valid for use only with MiTek® connectors. This design is based only upon parameters shown, and is for an individual building component, not a truss system. Before use, the building designer must verify the applicability of design parameters and properly incorporate this design into the overall building design. Bracing indicated is to prevent buckling of individual truss web and/or chord members only. Additional temporary and permanent bracing is always required for stability and to prevent collapse with possible personal injury and property damage. For general guidance regarding the fabrication, storage, delivery, erection and bracing of trusses and truss systems, see **ANSI/TPI1 Quality Criteria and DSB-22** available from Truss Plate Institute (www.tpinst.org) and **BCSI Building Component Safety Information** available from the Structural Building Component Association (www.sbcacomponents.com)

ENGINEERING BY TRENCO A MiTek Affiliate
818 Soundside Road
Edenton, NC 27932

9) All bearings are assumed to be SP No.2 crushing capacity of 565 psi.
10) Provide mechanical connection (by others) of truss to bearing plate capable of withstanding 100 lb uplift at joint 1, 13 lb uplift at joint 30, 44 lb uplift at joint 31, 78 lb uplift at joint 32, 68 lb uplift at joint 34, 69 lb uplift at joint 35, 67 lb uplift at joint 36, 76 lb uplift at joint 37, 36 lb uplift at joint 38, 164 lb uplift at joint 39, 36 lb uplift at joint 29, 81 lb uplift at joint 28, 68 lb uplift at joint 27, 68 lb uplift at joint 26, 68 lb uplift at joint 25, 72 lb uplift at joint 24, 52 lb uplift at joint 23, 115 lb uplift at joint 22, 16 lb uplift at joint 20, 100 lb uplift at joint 1 and 16 lb uplift at joint 20.
11) Beveled plate or shim required to provide full bearing surface with truss chord at joint(s) 40.

LOAD CASE(S) Standard

WARNING - Verify design parameters and READ NOTES ON THIS AND INCLUDED MITEK REFERENCE PAGE MII-7473 rev. 1/2/2023 BEFORE USE.
Design valid for use only with MiTek® connectors. This design is based only upon parameters shown, and is for an individual building component, not a truss system. Before use, the building designer must verify the applicability of design parameters and properly incorporate this design into the overall building design. Bracing indicated is to prevent buckling of individual truss web and/or chord members only. Additional temporary and permanent bracing is always required for stability and to prevent collapse with possible personal injury and property damage. For general guidance regarding the fabrication, storage, delivery, erection and bracing of trusses and truss systems, see **ANSI/TPI1 Quality Criteria and DSB-22** available from Truss Plate Institute (www.tpinst.org) and **BCSI Building Component Safety Information** available from the Structural Building Component Association (www.sbcacomponents.com)

ENGINEERING BY TRENCO A MiTek Affiliate
818 Soundside Road
Edenton, NC 27932

Job	Truss	Truss Type	Qty	Ply	JSJ, Magnolia Prime
4619354	A02	Common	10	1	Job Reference (optional) I70941780

Builders FirstSource (Sumter, SC), Sumter, SC - 29153,

Run: 8.63 S Sep 26 2024 Print: 8.630 S Sep 26 2024 MiTek Industries, Inc. Wed Jan 22 12:49:14 Page: 1
ID:5JJ?mM_c5ELrJmVZ0?ITgczkzyy-RfC?PsB70Hq3NSgPqnL8w3uITXbGKWrCDoi7J4zJC?f

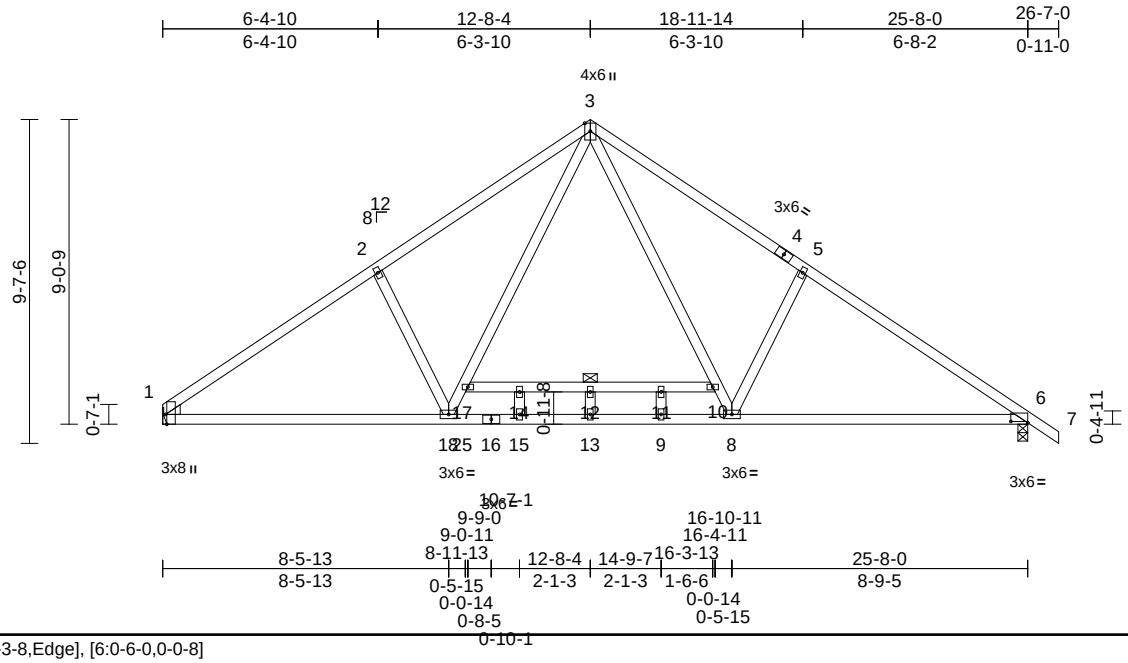

Scale = 1:68.4

Plate Offsets (X, Y): [1:0-3-8,Edge], [6:0-6-0,0-0-8]

Loading	(psf)	Spacing	2-0-0	CSI		DEFL	in	(loc)	l/defl	L/d	PLATES	GRIP
TCLL (roof)	20.0	Plate Grip DOL	1.15	TC	0.56	Vert(LL)	-0.29	12	>999	360	MT20	244/190
TCDL	10.0	Lumber DOL	1.15	BC	0.91	Vert(CT)	-0.46	12	>672	240		
BCLL	0.0*	Rep Stress Incr	YES	WB	0.38	Horz(CT)	0.04	6	n/a	n/a		
BCDL	10.0	Code	IRC2015/TPI2014	Matrix-MS		Wind(LL)	0.12	8-24	>999	240	Weight: 143 lb	FT = 20%

LUMBER

TOP CHORD 2x4 SP No.2
BOT CHORD 2x4 SP No.2
WEBS 2x4 SP No.3
WEDGE Left: 2x4 SP No.3

BRACING

TOP CHORD Structural wood sheathing directly applied or 3-10-10 oc purlins.
BOT CHORD Rigid ceiling directly applied or 10-0-0 oc bracing. Except:
6-0-0 oc bracing: 10-17

REACTIONS (size) 1= Mechanical, 6=0-3-8
Max Horiz 1=-302 (LC 8)
Max Uplift 1=-208 (LC 12), 6=-243 (LC 13)
Max Grav 1=1164 (LC 19), 6=1218 (LC 20)

FORCES (lb) - Maximum Compression/Maximum Tension
TOP CHORD 1-2=-1681/418, 2-3=-1573/506, 3-5=-1615/514, 5-6=-1730/424, 6-7=0/31
BOT CHORD 1-18=-291/1530, 15-18=-27/1073, 13-15=-27/1073, 9-13=-27/1073, 8-9=-27/1073, 6-8=-205/1367, 14-17=-76/0, 12-14=-76/0, 11-12=-76/0, 10-11=-76/0
WEBS 3-10=-228/890, 8-10=-259/779, 5-8=-483/380, 17-18=-252/700, 3-17=-219/820, 2-18=-447/371, 14-15=-41/0, 12-13=-29/14, 9-11=-83/0

NOTES

1) Unbalanced roof live loads have been considered for this design.
2) Wind: ASCE 7-10; Vult=130mph (3-second gust) Vasd=103mph; TCDL=6.0psf; BCDL=6.0psf; h=25ft; Cat. II; Exp C; Enclosed; MWFRS (envelope) exterior zone and C-C Exterior (2) zone; cantilever left and right exposed ; end vertical left and right exposed;C-C for members and forces & MWFRS for reactions shown; Lumber DOL=1.60 plate grip DOL=1.60
3) All plates are 2x4 MT20 unless otherwise indicated.
4) This truss has been designed for a 10.0 psf bottom chord live load nonconcurrent with any other live loads.
5) * This truss has been designed for a live load of 20.0psf on the bottom chord in all areas where a rectangle 3-06-00 tall by 2-00-00 wide will fit between the bottom chord and any other members, with BCDL = 10.0psf.
6) Bearings are assumed to be: , Joint 6 SP No.2 crushing capacity of 565 psi.
7) Refer to girder(s) for truss to truss connections.
8) Provide mechanical connection (by others) of truss to bearing plate capable of withstanding 208 lb uplift at joint 1 and 243 lb uplift at joint 6.

LOAD CASE(S) Standard

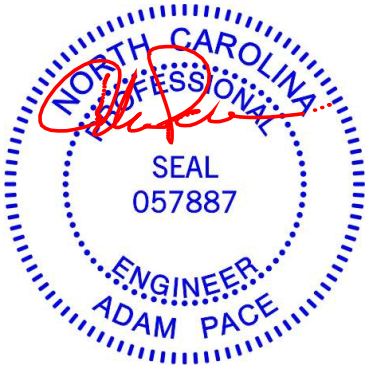

January 24,2025

WARNING - Verify design parameters and READ NOTES ON THIS AND INCLUDED MITEK REFERENCE PAGE MII-7473 rev. 1/2/2023 BEFORE USE.
Design valid for use only with MiTek® connectors. This design is based only upon parameters shown, and is for an individual building component, not a truss system. Before use, the building designer must verify the applicability of design parameters and properly incorporate this design into the overall building design. Bracing indicated is to prevent buckling of individual truss web and/or chord members only. Additional temporary and permanent bracing is always required for stability and to prevent collapse with possible personal injury and property damage. For general guidance regarding the fabrication, storage, delivery, erection and bracing of trusses and truss systems, see **ANSI/TPI1 Quality Criteria and DSB-22** available from Truss Plate Institute (www.tpinst.org) and **BCSI Building Component Safety Information** available from the Structural Building Component Association (www.sbcacomponents.com)

ENGINEERING BY TRENCO A MiTek Affiliate
818 Soundside Road
Edenton, NC 27932

Job	Truss	Truss Type	Qty	Ply	JSJ, Magnolia Prime
4619354	A03	Common	7	1	Job Reference (optional) I70941781

Builders FirstSource (Sumter, SC), Sumter, SC - 29153, Run: 8.63 S Sep 26 2024 Print: 8.630 S Sep 26 2024 MiTek Industries, Inc. Wed Jan 22 12:49:14 Page: 1
ID:?M?x51jFgHK9wGsgCHS8jgzl_1A-RfC?PsB70Hq3NSgPqnL8w3uITXbGKWrCDoi7J4zJC?f

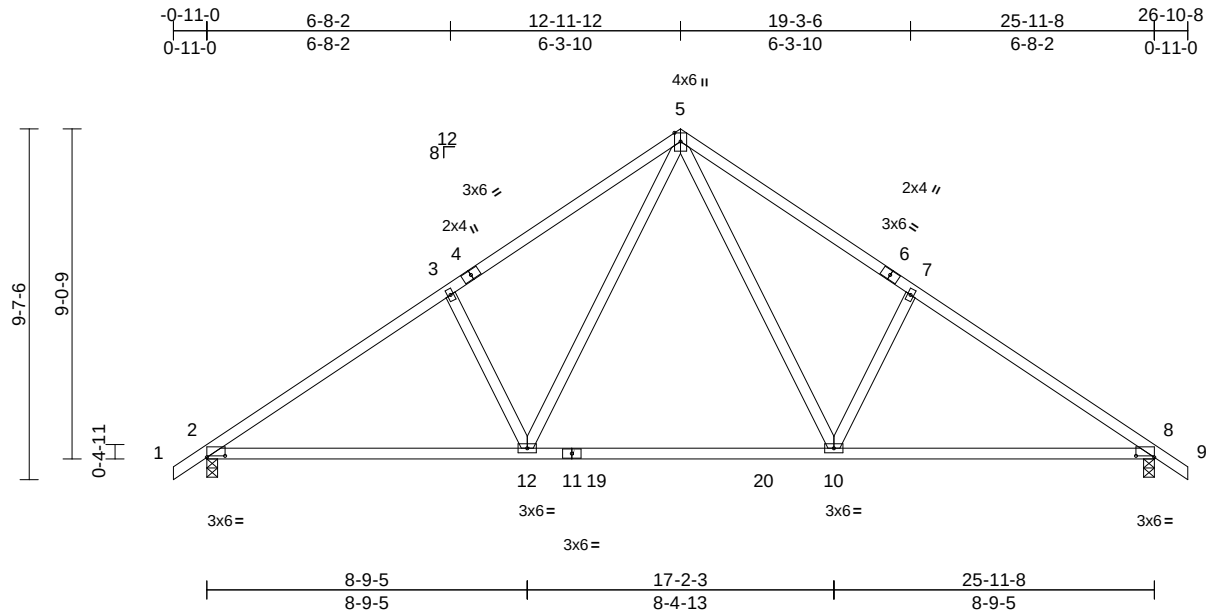

Scale = 1:63.1

Plate Offsets (X, Y): [2:0-6-0,0-0-8], [8:0-6-0,0-0-8]

Loading	(psf)	Spacing	2-0-0	CSI		DEFL	in	(loc)	l/defl	L/d	PLATES	GRIP
TCLL (roof)	20.0	Plate Grip DOL	1.15	TC	0.58	Vert(LL)	-0.25	10-12	>999	360	MT20	244/190
TCDL	10.0	Lumber DOL	1.15	BC	0.73	Vert(CT)	-0.33	10-12	>948	240		
BCLL	0.0*	Rep Stress Incr	YES	WB	0.50	Horz(CT)	0.04	8	n/a	n/a		
BCDL	10.0	Code	IRC2015/TPI2014	Matrix-MS		Wind(LL)	0.13	12-15	>999	240	Weight: 131 lb	FT = 20%

LUMBER
TOP CHORD 2x4 SP No.2
BOT CHORD 2x4 SP No.2
WEBS 2x4 SP No.3

BRACING
TOP CHORD Structural wood sheathing directly applied or 4-1-8 oc purlins.
BOT CHORD Rigid ceiling directly applied or 9-3-15 oc bracing.

REACTIONS (size) 2=0-3-8, 8=0-3-8
Max Horiz 2=-309 (LC 10)
Max Uplift 2=-290 (LC 12), 8=-290 (LC 13)
Max Grav 2=1096 (LC 19), 8=1096 (LC 20)

FORCES (lb) - Maximum Compression/Maximum Tension
TOP CHORD 1-2=0/31, 2-3=-1504/511, 3-5=-1483/600, 5-7=-1483/600, 7-8=-1504/511, 8-9=0/31
BOT CHORD 2-12=-370/1391, 10-12=-84/885, 8-10=-276/1186
WEBS 5-10=-278/734, 7-10=-489/379, 5-12=-278/733, 3-12=-489/379

NOTES
1) Unbalanced roof live loads have been considered for this design.
2) Wind: ASCE 7-10; Vult=130mph (3-second gust) Vasd=103mph; TCDL=6.0psf; BCDL=6.0psf; h=25ft; Cat. II; Exp C; Enclosed; MWFRS (envelope) exterior zone and C-C Exterior (2) zone; cantilever left and right exposed ; end vertical left and right exposed;C-C for members and forces & MWFRS for reactions shown; Lumber DOL=1.60 plate grip DOL=1.60
3) This truss has been designed for a 10.0 psf bottom chord live load nonconcurrent with any other live loads.
4) * This truss has been designed for a live load of 20.0psf on the bottom chord in all areas where a rectangle 3-06-00 tall by 2-00-00 wide will fit between the bottom chord and any other members, with BCDL = 10.0psf.
5) All bearings are assumed to be SP No.2 crushing capacity of 565 psi.
6) Provide mechanical connection (by others) of truss to bearing plate capable of withstanding 290 lb uplift at joint 2 and 290 lb uplift at joint 8.

LOAD CASE(S) Standard

January 24,2025

WARNING - Verify design parameters and READ NOTES ON THIS AND INCLUDED MITEK REFERENCE PAGE MII-7473 rev. 1/2/2023 BEFORE USE.
Design valid for use only with MiTek® connectors. This design is based only upon parameters shown, and is for an individual building component, not a truss system. Before use, the building designer must verify the applicability of design parameters and properly incorporate this design into the overall building design. Bracing indicated is to prevent buckling of individual truss web and/or chord members only. Additional temporary and permanent bracing is always required for stability and to prevent collapse with possible personal injury and property damage. For general guidance regarding the fabrication, storage, delivery, erection and bracing of trusses and truss systems, see **ANSI/TPI1 Quality Criteria and DSB-22** available from Truss Plate Institute (www.tpinst.org) and **BCSI Building Component Safety Information** available from the Structural Building Component Association (www.sbcacomponents.com)

ENGINEERING BY TRENCO A MiTek Affiliate
818 Soundside Road
Edenton, NC 27932

Job	Truss	Truss Type	Qty	Ply	JSJ, Magnolia Prime
4619354	A04	Common Structural Gable	1	1	Job Reference (optional) I70941782

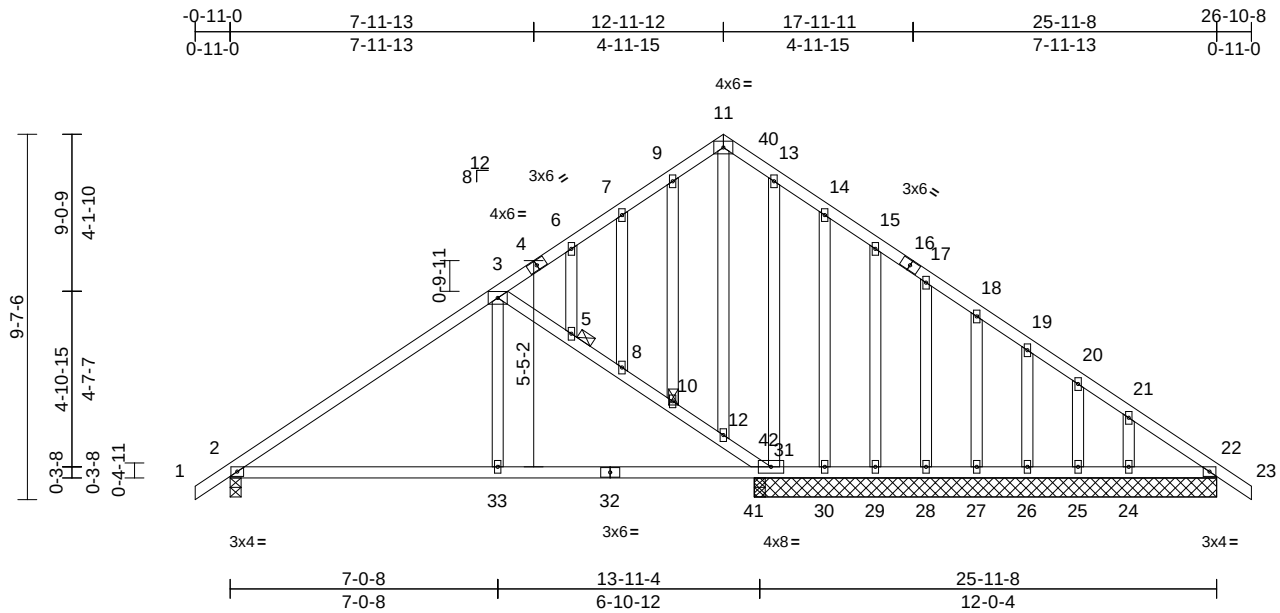

Scale = 1:60.6

Loading	(psf)	Spacing	2-0-0	CSI		DEFL	in	(loc)	l/defl	L/d	PLATES	GRIP
TCLL (roof)	20.0	Plate Grip DOL	1.15	TC	0.83	Vert(LL)	0.10	33-36	>999	240	MT20	244/190
TCDL	10.0	Lumber DOL	1.15	BC	0.58	Vert(CT)	-0.11	33-36	>999	240		
BCLL	0.0*	Rep Stress Incr	NO	WB	0.22	Horz(CT)	0.03	37	n/a	n/a		
BCDL	10.0	Code	IRC2015/TPI2014	Matrix-MS							Weight: 192 lb	FT = 20%

LUMBER

TOP CHORD 2x4 SP No.2
BOT CHORD 2x4 SP No.2
WEBS 2x4 SP No.3
OTHERS 2x4 SP No.3

BRACING

TOP CHORD Structural wood sheathing directly applied or 4-5-11 oc purlins.
BOT CHORD Rigid ceiling directly applied or 10-0-0 oc bracing.
JOINTS 1 Brace at Jt(s): 10, 5

REACTIONS (size) 2=0-3-8, 22=12-2-0, 24=12-2-0, 25=12-2-0, 26=12-2-0, 27=12-2-0, 28=12-2-0, 29=12-2-0, 30=12-2-0, 31=12-2-0, 37=12-2-0
Max Horiz 2=-309 (LC 10)
Max Uplift 2=-227 (LC 12), 22=-18 (LC 9), 24=-118 (LC 13), 25=-50 (LC 13), 26=-73 (LC 13), 27=-66 (LC 13), 28=-74 (LC 13), 29=-47 (LC 13), 30=-269 (LC 22), 31=-113 (LC 12), 37=-18 (LC 9)
Max Grav 2=897 (LC 1), 22=372 (LC 19), 24=179 (LC 20), 25=100 (LC 20), 26=124 (LC 20), 27=123 (LC 20), 28=107 (LC 20), 29=180 (LC 20), 30=2 (LC 9), 31=930 (LC 19), 37=372 (LC 19)

FORCES (lb) - Maximum Compression/Maximum Tension

TOP CHORD 1-2=0/31, 2-3=-1194/274, 3-6=-517/154, 6-7=-433/161, 7-9=-432/193, 9-11=-429/225, 11-13=-489/235, 13-14=-419/211, 14-15=-422/172, 15-17=-429/139, 17-18=-440/107, 18-19=-452/76, 19-20=-463/66, 20-21=-477/67, 21-22=-515/80, 22-23=0/31, 3-5=-833/355, 5-8=-864/369, 8-10=-926/402, 10-12=-988/433, 12-31=-864/377
BOT CHORD 2-33=-255/1098, 31-33=-255/1098, 30-31=-53/451, 29-30=-53/451, 28-29=-53/451, 27-28=-53/451, 26-27=-53/451, 25-26=-53/451, 24-25=-53/451, 22-24=-53/451
WEBS 3-33=0/316, 11-12=-124/254, 9-10=-60/48, 7-8=-71/52, 5-6=-11/17, 13-31=-185/30, 14-30=-38/108, 15-29=-112/84, 17-28=-106/84, 18-27=-105/84, 19-26=-109/86, 20-25=-91/73, 21-24=-162/119

NOTES

1) Unbalanced roof live loads have been considered for this design.
2) Wind: ASCE 7-10; Vult=130mph (3-second gust) Vasd=103mph; TCDL=6.0psf; BCDL=6.0psf; h=25ft; Cat. II; Exp C; Enclosed; MWFRS (envelope) exterior zone and C-C Exterior (2) zone; cantilever left and right exposed ; end vertical left and right exposed;C-C for members and forces & MWFRS for reactions shown; Lumber DOL=1.60 plate grip DOL=1.60
3) Truss designed for wind loads in the plane of the truss only. For studs exposed to wind (normal to the face), see Standard Industry Gable End Details as applicable, or consult qualified building designer as per ANSI/TPI 1.
4) All plates are 2x4 MT20 unless otherwise indicated.
5) Gable studs spaced at 1-4-0 oc.
6) This truss has been designed for a 10.0 psf bottom chord live load nonconcurrent with any other live loads.
7) * This truss has been designed for a live load of 20.0psf on the bottom chord in all areas where a rectangle 3-06-00 tall by 2-00-00 wide will fit between the bottom chord and any other members.
8) All bearings are assumed to be SP No.2 crushing capacity of 565 psi.
9) Provide mechanical connection (by others) of truss to bearing plate capable of withstanding 227 lb uplift at joint 2, 113 lb uplift at joint 31, 269 lb uplift at joint 30, 47 lb uplift at joint 29, 74 lb uplift at joint 28, 66 lb uplift at joint 27, 73 lb uplift at joint 26, 50 lb uplift at joint 25, 118 lb uplift at joint 24, 18 lb uplift at joint 22 and 18 lb uplift at joint 22.
10) Load case(s) 1 has/have been modified. Building designer must review loads to verify that they are correct for the intended use of this truss.
11) Graphical purlin representation does not depict the size or the orientation of the purlin along the top and/or bottom chord.
12) In the LOAD CASE(S) section, loads applied to the face of the truss are noted as front (F) or back (B).

LOAD CASE(S) Standard

1) Dead + Roof Live (balanced): Lumber Increase=1.15, Plate Increase=1.15
Uniform Loads (lb/ft)
Vert: 1-3=-60, 23-40=-60, 33-34=-20, 37-41=-20
Trapezoidal Loads (lb/ft)

January 24,2025

Continued on page 2

WARNING - Verify design parameters and READ NOTES ON THIS AND INCLUDED MITEK REFERENCE PAGE MII-7473 rev. 1/2/2023 BEFORE USE.
Design valid for use only with MiTek® connectors. This design is based only upon parameters shown, and is for an individual building component, not a truss system. Before use, the building designer must verify the applicability of design parameters and properly incorporate this design into the overall building design. Bracing indicated is to prevent buckling of individual truss web and/or chord members only. Additional temporary and permanent bracing is always required for stability and to prevent collapse with possible personal injury and property damage. For general guidance regarding the fabrication, storage, delivery, erection and bracing of trusses and truss systems, see **ANSI/TPI1 Quality Criteria and DSB-22** available from Truss Plate Institute (www.tpinst.org) and **BCSI Building Component Safety Information** available from the Structural Building Component Association (www.sbcacomponents.com)

ENGINEERING BY TRENCO A MiTek Affiliate
818 Soundside Road
Edenton, NC 27932

Vert: 3=-91 (F=-31)-to-4=-92 (F=-32), 4=-92 (F=-32)-to-6=-93 (F=-33), 6=-93 (F=-33)-to-7=-94 (F=-34), 7=-94 (F=-34)-to-9=-95 (F=-35), 9=-95 (F=-35)-to-11=-96 (F=-36), 11=-96 (F=-36)-to-40=-97 (F=-37), 33=-21 (F=-1)-to-32=-24 (F=-4), 32=-24 (F=-4)-to-41=-27 (F=-7), 3=-31 (F)-to-5=-33 (F), 5=-33 (F)-to-8=-34 (F), 8=-34 (F)-to-10=-35 (F), 10=-35 (F)-to-12=-36 (F), 12=-36 (F)-to-42=-37 (F)

WARNING - Verify design parameters and READ NOTES ON THIS AND INCLUDED MITEK REFERENCE PAGE MII-7473 rev. 1/2/2023 BEFORE USE.
Design valid for use only with MiTek® connectors. This design is based only upon parameters shown, and is for an individual building component, not a truss system. Before use, the building designer must verify the applicability of design parameters and properly incorporate this design into the overall building design. Bracing indicated is to prevent buckling of individual truss web and/or chord members only. Additional temporary and permanent bracing is always required for stability and to prevent collapse with possible personal injury and property damage. For general guidance regarding the fabrication, storage, delivery, erection and bracing of trusses and truss systems, see **ANSI/TPI1 Quality Criteria and DSB-22** available from Truss Plate Institute (www.tpinst.org) and **BCSI Building Component Safety Information** available from the Structural Building Component Association (www.sbcacomponents.com)

ENGINEERING BY TRENCO A MiTek Affiliate
818 Soundside Road
Edenton, NC 27932

Job	Truss	Truss Type	Qty	Ply	JSJ, Magnolia Prime
4619354	B01	Common	4	1	Job Reference (optional) I70941783

Builders FirstSource (Sumter, SC), Sumter, SC - 29153, Run: 8.63 S Sep 26 2024 Print: 8.630 S Sep 26 2024 MiTek Industries, Inc. Wed Jan 22 12:49:14 Page: 1
ID:Lx2Od7XvxZThgRH9WtbUsczkzwy-RfC?PsB70Hq3NSgPqnL8w3uITXbGKWrCDoi7J4zJC?f

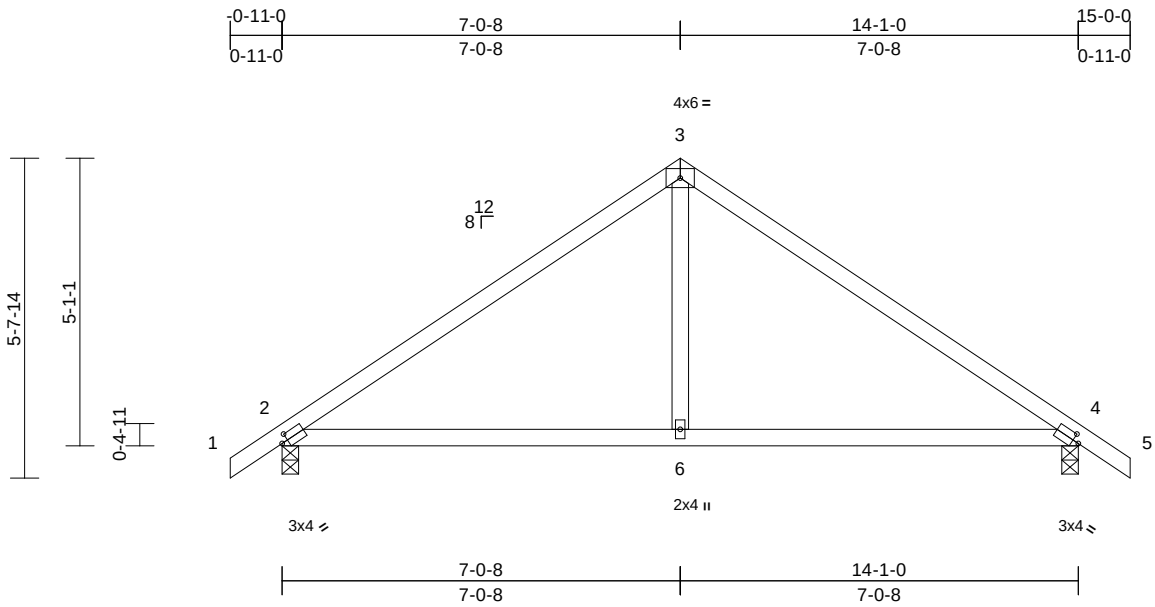

Scale = 1:40.8

Plate Offsets (X, Y): [2:0-1-6,0-1-8], [4:0-1-6,0-1-8]

Loading	(psf)	Spacing	2-0-0	CSI		DEFL	in	(loc)	l/defl	L/d	PLATES	GRIP
TCLL (roof)	20.0	Plate Grip DOL	1.15	TC	0.67	Vert(LL)	-0.08	6-9	>999	360	MT20	244/190
TCDL	10.0	Lumber DOL	1.15	BC	0.55	Vert(CT)	-0.15	6-9	>999	240		
BCLL	0.0*	Rep Stress Incr	YES	WB	0.13	Horz(CT)	0.01	4	n/a	n/a		
BCDL	10.0	Code	IRC2015/TPI2014	Matrix-MS		Wind(LL)	0.12	6-9	>999	240	Weight: 57 lb	FT = 20%

LUMBER
TOP CHORD 2x4 SP No.2
BOT CHORD 2x4 SP No.2
WEBS 2x4 SP No.3

BRACING
TOP CHORD Structural wood sheathing directly applied or 5-0-0 oc purlins.
BOT CHORD Rigid ceiling directly applied or 10-0-0 oc bracing.

REACTIONS (size) 2=0-3-8, 4=0-3-8
Max Horiz 2=-177 (LC 10)
Max Uplift 2=-171 (LC 12), 4=-171 (LC 13)
Max Grav 2=618 (LC 1), 4=618 (LC 1)

FORCES (lb) - Maximum Compression/Maximum Tension
TOP CHORD 1-2=0/31, 2-3=-688/240, 3-4=-688/240, 4-5=0/31
BOT CHORD 2-6=-101/500, 4-6=-65/500
WEBS 3-6=0/337

NOTES
1) Unbalanced roof live loads have been considered for this design.
2) Wind: ASCE 7-10; Vult=130mph (3-second gust) Vasd=103mph; TCDL=6.0psf; BCDL=6.0psf; h=25ft; Cat. II; Exp C; Enclosed; MWFRS (envelope) exterior zone and C-C Exterior (2) zone; cantilever left and right exposed ; end vertical left and right exposed;C-C for members and forces & MWFRS for reactions shown; Lumber DOL=1.60 plate grip DOL=1.60
3) This truss has been designed for a 10.0 psf bottom chord live load nonconcurrent with any other live loads.
4) * This truss has been designed for a live load of 20.0psf on the bottom chord in all areas where a rectangle 3-06-00 tall by 2-00-00 wide will fit between the bottom chord and any other members.
5) All bearings are assumed to be SP No.2 crushing capacity of 565 psi.
6) Provide mechanical connection (by others) of truss to bearing plate capable of withstanding 171 lb uplift at joint 2 and 171 lb uplift at joint 4.

LOAD CASE(S) Standard

January 24,2025

WARNING - Verify design parameters and READ NOTES ON THIS AND INCLUDED MITEK REFERENCE PAGE MII-7473 rev. 1/2/2023 BEFORE USE.
Design valid for use only with MiTek® connectors. This design is based only upon parameters shown, and is for an individual building component, not a truss system. Before use, the building designer must verify the applicability of design parameters and properly incorporate this design into the overall building design. Bracing indicated is to prevent buckling of individual truss web and/or chord members only. Additional temporary and permanent bracing is always required for stability and to prevent collapse with possible personal injury and property damage. For general guidance regarding the fabrication, storage, delivery, erection and bracing of trusses and truss systems, see **ANSI/TPI1 Quality Criteria and DSB-22** available from Truss Plate Institute (www.tpinst.org) and **BCSI Building Component Safety Information** available from the Structural Building Component Association (www.sbcacomponents.com)

ENGINEERING BY TRENCO A MiTek Affiliate
818 Soundside Road
Edenton, NC 27932

Job	Truss	Truss Type	Qty	Ply	JSJ, Magnolia Prime
4619354	B02	Common Supported Gable	1	1	Job Reference (optional) I70941784

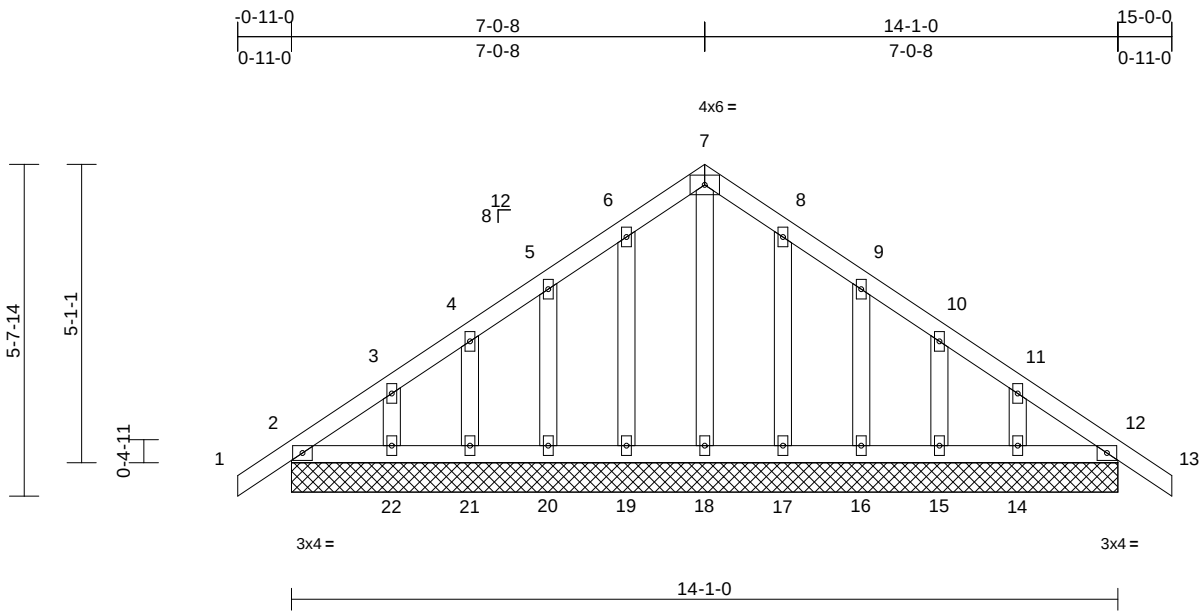

Scale = 1:39.3

Loading	(psf)	Spacing	2-0-0	CSI		DEFL	in	(loc)	l/defl	L/d	PLATES	GRIP
TCLL (roof)	20.0	Plate Grip DOL	1.15	TC	0.06	Vert(LL)	n/a	-	n/a	999	MT20	244/190
TCDL	10.0	Lumber DOL	1.15	BC	0.04	Vert(CT)	n/a	-	n/a	999		
BCLL	0.0*	Rep Stress Incr	YES	WB	0.05	Horz(CT)	0.00	12	n/a	n/a		
BCDL	10.0	Code	IRC2015/TPI2014	Matrix-MS							Weight: 84 lb	FT = 20%

LUMBER
TOP CHORD 2x4 SP No.2
BOT CHORD 2x4 SP No.2
OTHERS 2x4 SP No.3

BRACING
TOP CHORD Structural wood sheathing directly applied or 6-0-0 oc purlins.
BOT CHORD Rigid ceiling directly applied or 10-0-0 oc bracing.

REACTIONS (size) 2=14-1-0, 12=14-1-0, 14=14-1-0, 15=14-1-0, 16=14-1-0, 17=14-1-0, 18=14-1-0, 19=14-1-0, 20=14-1-0, 21=14-1-0, 22=14-1-0, 23=14-1-0, 27=14-1-0
Max Horiz 2=-177 (LC 10), 23=-177 (LC 10)
Max Uplift 2=-40 (LC 8), 12=-5 (LC 9), 14=-79 (LC 13), 15=-64 (LC 13), 16=-74 (LC 13), 17=-59 (LC 13), 19=-63 (LC 12), 20=-73 (LC 12), 21=-64 (LC 12), 22=-82 (LC 12), 23=-40 (LC 8), 27=-5 (LC 9)
Max Grav 2=138 (LC 20), 12=138 (LC 1), 14=139 (LC 20), 15=115 (LC 20), 16=123 (LC 20), 17=122 (LC 20), 18=130 (LC 22), 19=126 (LC 19), 20=121 (LC 19), 21=114 (LC 19), 22=141 (LC 19), 23=138 (LC 20), 27=138 (LC 1)

FORCES (lb) - Maximum Compression/Maximum Tension
TOP CHORD 1-2=0/31, 2-3=-133/122, 3-4=-104/97, 4-5=-89/92, 5-6=-100/125, 6-7=-140/162, 7-8=-140/162, 8-9=-100/114, 9-10=-53/57, 10-11=-53/34, 11-12=-90/76, 12-13=0/31
BOT CHORD 2-22=-85/133, 21-22=-85/133, 20-21=-85/133, 19-20=-85/133, 18-19=-85/133, 17-18=-85/133, 16-17=-85/133, 15-16=-85/133, 14-15=-85/133, 12-14=-85/133
WEBS 7-18=-113/60, 6-19=-100/79, 5-20=-113/88, 4-21=-104/82, 3-22=-133/90, 8-17=-100/75, 9-16=-112/90, 10-15=-104/82, 11-14=-133/89

NOTES
1) Unbalanced roof live loads have been considered for this design.
2) Wind: ASCE 7-10; Vult=130mph (3-second gust) Vasd=103mph; TCDL=6.0psf; BCDL=6.0psf; h=25ft; Cat. II; Exp C; Enclosed; MWFRS (envelope) exterior zone and C-C Exterior (2) zone; cantilever left and right exposed ; end vertical left and right exposed;C-C for members and forces & MWFRS for reactions shown; Lumber DOL=1.60 plate grip DOL=1.60
3) Truss designed for wind loads in the plane of the truss only. For studs exposed to wind (normal to the face), see Standard Industry Gable End Details as applicable, or consult qualified building designer as per ANSI/TPI 1.
4) All plates are 2x4 MT20 unless otherwise indicated.
5) Gable requires continuous bottom chord bearing.
6) Gable studs spaced at 1-4-0 oc.
7) This truss has been designed for a 10.0 psf bottom chord live load nonconcurrent with any other live loads.
8) * This truss has been designed for a live load of 20.0psf on the bottom chord in all areas where a rectangle 3-06-00 tall by 2-00-00 wide will fit between the bottom chord and any other members.
9) All bearings are assumed to be SP No.2 crushing capacity of 565 psi.
10) Provide mechanical connection (by others) of truss to bearing plate capable of withstanding 40 lb uplift at joint 2, 5 lb uplift at joint 12, 63 lb uplift at joint 19, 73 lb uplift at joint 20, 64 lb uplift at joint 21, 82 lb uplift at joint 22, 59 lb uplift at joint 17, 74 lb uplift at joint 16, 64 lb uplift at joint 15, 79 lb uplift at joint 14, 40 lb uplift at joint 2 and 5 lb uplift at joint 12.
11) Beveled plate or shim required to provide full bearing surface with truss chord at joint(s) 2, 23.

LOAD CASE(S) Standard

January 24,2025

WARNING - Verify design parameters and READ NOTES ON THIS AND INCLUDED MITEK REFERENCE PAGE MII-7473 rev. 1/2/2023 BEFORE USE.
Design valid for use only with MiTek® connectors. This design is based only upon parameters shown, and is for an individual building component, not a truss system. Before use, the building designer must verify the applicability of design parameters and properly incorporate this design into the overall building design. Bracing indicated is to prevent buckling of individual truss web and/or chord members only. Additional temporary and permanent bracing is always required for stability and to prevent collapse with possible personal injury and property damage. For general guidance regarding the fabrication, storage, delivery, erection and bracing of trusses and truss systems, see **ANSI/TPI1 Quality Criteria and DSB-22** available from Truss Plate Institute (www.tpinst.org) and **BCSI Building Component Safety Information** available from the Structural Building Component Association (www.sbcacomponents.com)

ENGINEERING BY TRENCO A MiTek Affiliate
818 Soundside Road
Edenton, NC 27932

Job	Truss	Truss Type	Qty	Ply	JSJ, Magnolia Prime
4619354	C01	Common Structural Gable	1	1	Job Reference (optional) I70941785

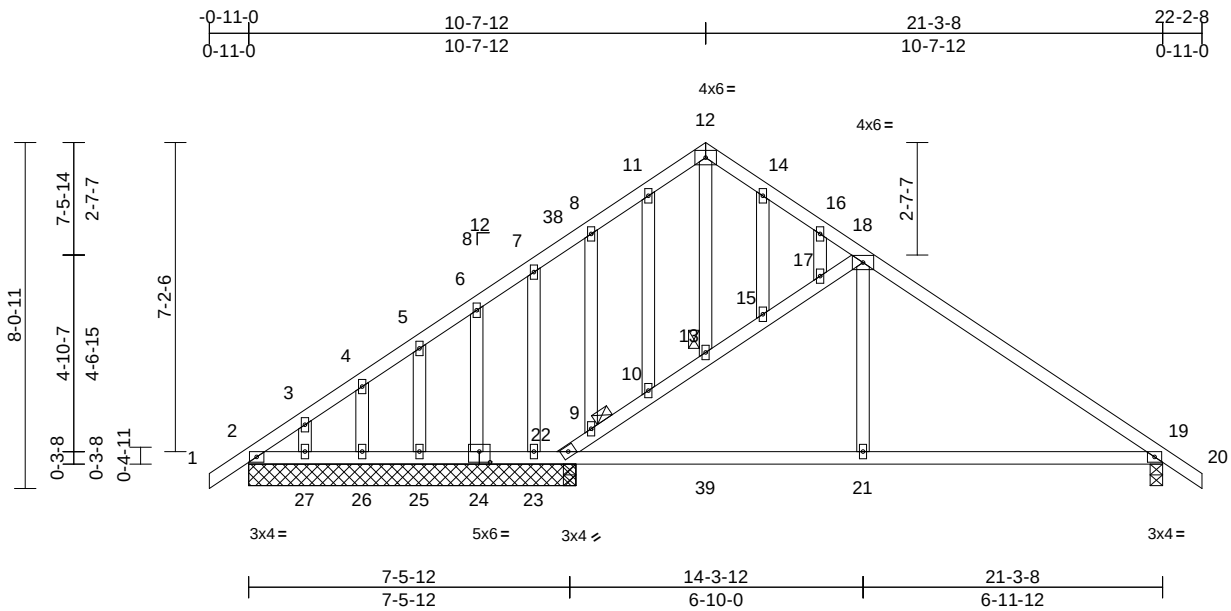

Scale = 1:53.7

Plate Offsets (X, Y): [24:0-3-0,0-3-0]

Loading	(psf)	Spacing	2-0-0	CSI		DEFL	in	(loc)	l/defl	L/d	PLATES	GRIP
TCLL (roof)	20.0	Plate Grip DOL	1.15	TC	0.66	Vert(LL)	0.10	21-37	>999	240	MT20	244/190
TCDL	10.0	Lumber DOL	1.15	BC	0.54	Vert(CT)	-0.12	21-37	>999	240		
BCLL	0.0*	Rep Stress Incr	NO	WB	0.12	Horz(CT)	0.02	19	n/a	n/a		
BCDL	10.0	Code	IRC2015/TPI2014	Matrix-MS							Weight: 138 lb	FT = 20%

LUMBER

TOP CHORD 2x4 SP No.2
BOT CHORD 2x4 SP No.2
WEBS 2x4 SP No.3
OTHERS 2x4 SP No.3

BRACING

TOP CHORD Structural wood sheathing directly applied or 5-0-15 oc purlins.
BOT CHORD Rigid ceiling directly applied or 10-0-0 oc bracing.
JOINTS 1 Brace at Jt(s): 13, 9

REACTIONS (size) 2=7-7-8, 19=0-3-8, 22=7-7-8, 23=7-7-8, 24=7-7-8, 25=7-7-8, 26=7-7-8, 27=7-7-8, 28=7-7-8, 31=7-7-8
Max Horiz 2=-257 (LC 10), 28=-257 (LC 10)
Max Uplift 2=-2 (LC 8), 19=-190 (LC 13), 22=-148 (LC 12), 23=-175 (LC 17), 24=-65 (LC 12), 25=-68 (LC 12), 26=-68 (LC 12), 27=-73 (LC 12), 28=-2 (LC 8), 31=-148 (LC 12)
Max Grav 2=305 (LC 21), 19=805 (LC 1), 22=885 (LC 1), 23=-38 (LC 9), 24=144 (LC 19), 25=114 (LC 19), 26=128 (LC 19), 27=93 (LC 19), 28=305 (LC 21), 31=885 (LC 1)

FORCES (lb) - Maximum Compression/Maximum Tension

TOP CHORD 1-2=0/31, 2-3=-444/25, 3-4=-417/20, 4-5=-392/16, 5-6=-364/11, 6-7=-337/21, 7-8=-322/45, 8-11=-367/92, 11-12=-320/122, 12-14=-323/129, 14-16=-366/111, 16-18=-421/110, 18-19=-1021/199, 19-20=0/31, 9-22=-920/391, 9-10=-793/352, 10-13=-743/332, 13-15=-799/352, 15-17=-738/318, 17-18=-720/316
BOT CHORD 2-27=-47/409, 26-27=-43/409, 25-26=-43/409, 23-25=-43/409, 22-23=-42/408, 21-22=-42/771, 19-21=-46/771
WEBS 18-21=0/306, 12-13=-59/149, 10-11=-43/46, 8-9=-220/123, 7-23=-103/78, 6-24=-91/84, 5-25=-108/84, 4-26=-108/86, 3-27=-110/78, 14-15=-64/53, 16-17=-8/13

NOTES

1) Unbalanced roof live loads have been considered for this design.
2) Wind: ASCE 7-10; Vult=130mph (3-second gust) Vasd=103mph; TCDL=6.0psf; BCDL=6.0psf; h=25ft; Cat. II; Exp C; Enclosed; MWFRS (envelope) exterior zone and C-C Exterior (2) zone; cantilever left and right exposed ; end vertical left and right exposed;C-C for members and forces & MWFRS for reactions shown; Lumber DOL=1.60 plate grip DOL=1.60
3) Truss designed for wind loads in the plane of the truss only. For studs exposed to wind (normal to the face), see Standard Industry Gable End Details as applicable, or consult qualified building designer as per ANSI/TPI 1.
4) All plates are 2x4 MT20 unless otherwise indicated.
5) Gable studs spaced at 1-4-0 oc.
6) This truss has been designed for a 10.0 psf bottom chord live load nonconcurrent with any other live loads.
7) * This truss has been designed for a live load of 20.0psf on the bottom chord in all areas where a rectangle 3-06-00 tall by 2-00-00 wide will fit between the bottom chord and any other members.
8) All bearings are assumed to be SP No.2 crushing capacity of 565 psi.
9) Provide mechanical connection (by others) of truss to bearing plate capable of withstanding 2 lb uplift at joint 2, 148 lb uplift at joint 22, 175 lb uplift at joint 23, 65 lb uplift at joint 24, 68 lb uplift at joint 25, 68 lb uplift at joint 26, 73 lb uplift at joint 27, 190 lb uplift at joint 19, 2 lb uplift at joint 2 and 148 lb uplift at joint 22.
10) Load case(s) 1 has/have been modified. Building designer must review loads to verify that they are correct for the intended use of this truss.
11) Graphical purlin representation does not depict the size or the orientation of the purlin along the top and/or bottom chord.
12) In the LOAD CASE(S) section, loads applied to the face of the truss are noted as front (F) or back (B).

LOAD CASE(S) Standard

1) Dead + Roof Live (balanced): Lumber Increase=1.15, Plate Increase=1.15
   Uniform Loads (lb/ft)
   Vert: 1-38=-60, 12-38=-94 (F=-34), 18-20=-60, 28-32=-20, 32-39=-24 (F=-4), 21-35=-20, 13-33=-34 (F)
   Trapezoidal Loads (lb/ft)
   Vert: 12=-94 (F=-34)-to-14=-93 (F=-33), 14=-93 (F=-33)-to-16=-92 (F=-32), 16=-92 (F=-32)-to-18=-91 (F=-31), 39=-24 (F=-4)-to-21=-21 (F=-1), 13=-34 (F)-to-15=-33 (F), 15=-33 (F)-to-17=-32 (F), 17=-32 (F)-to-18=-31 (F)

January 24,2025

WARNING - Verify design parameters and READ NOTES ON THIS AND INCLUDED MITEK REFERENCE PAGE MII-7473 rev. 1/2/2023 BEFORE USE.
Design valid for use only with MiTek® connectors. This design is based only upon parameters shown, and is for an individual building component, not a truss system. Before use, the building designer must verify the applicability of design parameters and properly incorporate this design into the overall building design. Bracing indicated is to prevent buckling of individual truss web and/or chord members only. Additional temporary and permanent bracing is always required for stability and to prevent collapse with possible personal injury and property damage. For general guidance regarding the fabrication, storage, delivery, erection and bracing of trusses and truss systems, see **ANSI/TPI1 Quality Criteria and DSB-22** available from Truss Plate Institute (www.tpinst.org) and **BCSI Building Component Safety Information** available from the Structural Building Component Association (www.sbcacomponents.com)

ENGINEERING BY TRENCO A MiTek Affiliate
818 Soundside Road
Edenton, NC 27932

Job	Truss	Truss Type	Qty	Ply	JSJ, Magnolia Prime
4619354	C02	Common Girder	1	**3**	Job Reference (optional) I70941786

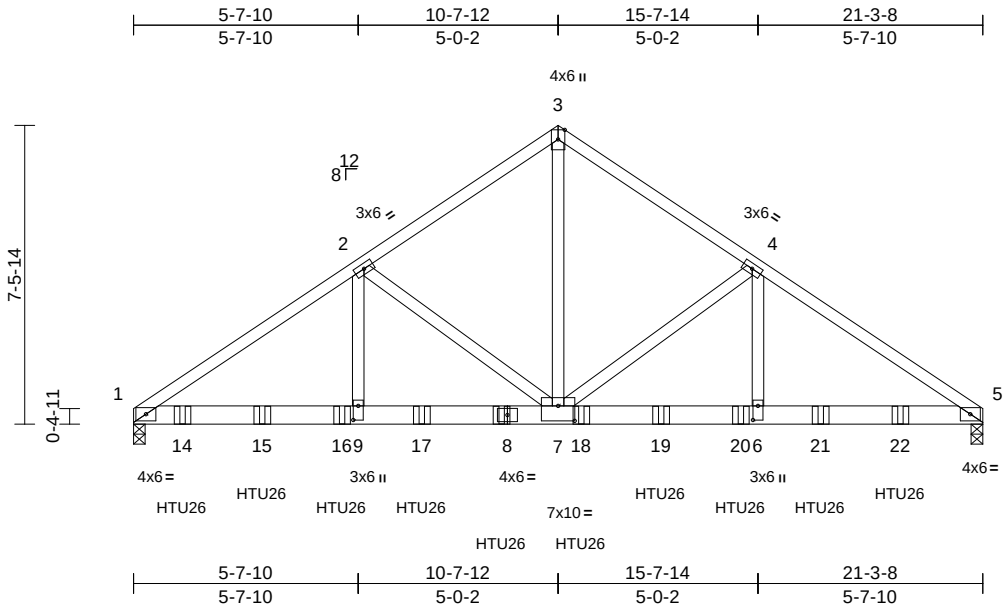

Scale = 1:57.8

Plate Offsets (X, Y): [6:0-4-4,0-1-8], [7:0-5-0,0-4-8], [9:0-4-4,0-1-8]

Loading	(psf)	**Spacing**	2-0-0	**CSI**		**DEFL**	in	(loc)	l/defl	L/d	**PLATES**	**GRIP**
TCLL (roof)	20.0	Plate Grip DOL	1.15	TC	0.52	Vert(LL)	-0.08	6-7	>999	360	MT20	244/190
TCDL	10.0	Lumber DOL	1.15	BC	0.45	Vert(CT)	-0.16	6-7	>999	240		
BCLL	0.0*	Rep Stress Incr	NO	WB	0.54	Horz(CT)	0.04	5	n/a	n/a		
BCDL	10.0	Code	IRC2015/TPI2014	Matrix-MS		Wind(LL)	0.09	6-7	>999	240	Weight: 378 lb	FT = 20%

LUMBER
TOP CHORD 2x4 SP No.2
BOT CHORD 2x6 SP 2400F 2.0E or 2x6 SP DSS
WEBS 2x4 SP No.2

BRACING
TOP CHORD Structural wood sheathing directly applied or 6-0-0 oc purlins.
BOT CHORD Rigid ceiling directly applied or 10-0-0 oc bracing.

REACTIONS (size) 1=0-3-8, 5=0-3-8
Max Horiz 1=237 (LC 5)
Max Uplift 1=-1352 (LC 8), 5=-1269 (LC 9)
Max Grav 1=6733 (LC 15), 5=6301 (LC 16)

FORCES (lb) - Maximum Compression/Maximum Tension
TOP CHORD 1-2=-9687/1943, 2-3=-6473/1387, 3-4=-6472/1387, 4-5=-9615/1938
BOT CHORD 1-9=-1666/8145, 7-9=-1666/8145, 6-7=-1509/7948, 5-6=-1509/7948
WEBS 2-9=-608/3452, 2-7=-3443/859, 3-7=-1373/6839, 4-7=-3409/853, 4-6=-604/3426

NOTES
1) 3-ply truss to be connected together with 10d (0.131"x3") nails as follows:
Top chords connected as follows: 2x4 - 1 row at 0-9-0 oc.
Bottom chords connected as follows: 2x6 - 2 rows staggered at 0-6-0 oc.
Web connected as follows: 2x4 - 1 row at 0-9-0 oc.
2) All loads are considered equally applied to all plies, except if noted as front (F) or back (B) face in the LOAD CASE(S) section. Ply to ply connections have been provided to distribute only loads noted as (F) or (B), unless otherwise indicated.
3) Unbalanced roof live loads have been considered for this design.
4) Wind: ASCE 7-10; Vult=130mph (3-second gust) Vasd=103mph; TCDL=6.0psf; BCDL=6.0psf; h=25ft; Cat. II; Exp C; Enclosed; MWFRS (envelope) exterior zone; cantilever left and right exposed ; end vertical left and right exposed; Lumber DOL=1.60 plate grip DOL=1.60
5) This truss has been designed for a 10.0 psf bottom chord live load nonconcurrent with any other live loads.
6) * This truss has been designed for a live load of 20.0psf on the bottom chord in all areas where a rectangle 3-06-00 tall by 2-00-00 wide will fit between the bottom chord and any other members.
7) All bearings are assumed to be SP 2400F 2.0E or DSS crushing capacity of 660 psi.
8) Provide mechanical connection (by others) of truss to bearing plate capable of withstanding 1352 lb uplift at joint 1 and 1269 lb uplift at joint 5.
9) Use Simpson Strong-Tie HTU26 (10-16d Girder, 14-10dx1 1/2 Truss) or equivalent spaced at 2-0-0 oc max. starting at 1-2-12 from the left end to 19-2-12 to connect truss(es) to back face of bottom chord.
10) Fill all nail holes where hanger is in contact with lumber.

LOAD CASE(S) Standard
1) Dead + Roof Live (balanced): Lumber Increase=1.15, Plate Increase=1.15
Uniform Loads (lb/ft)
Vert: 1-5=-20, 1-3=-60, 3-5=-60
Concentrated Loads (lb)
Vert: 8=-1082 (B), 14=-1082 (B), 15=-1082 (B), 16=-1082 (B), 17=-1082 (B), 18=-1082 (B), 19=-1082 (B), 20=-1082 (B), 21=-1082 (B), 22=-1082 (B)

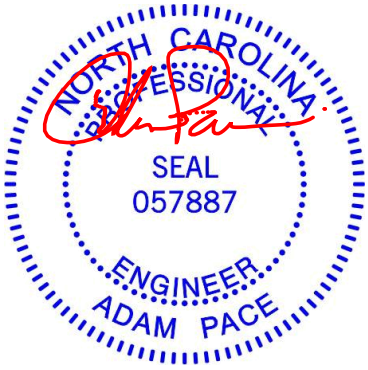

January 24,2025

WARNING - Verify design parameters and READ NOTES ON THIS AND INCLUDED MITEK REFERENCE PAGE MII-7473 rev. 1/2/2023 BEFORE USE.
Design valid for use only with MiTek® connectors. This design is based only upon parameters shown, and is for an individual building component, not a truss system. Before use, the building designer must verify the applicability of design parameters and properly incorporate this design into the overall building design. Bracing indicated is to prevent buckling of individual truss web and/or chord members only. Additional temporary and permanent bracing is always required for stability and to prevent collapse with possible personal injury and property damage. For general guidance regarding the fabrication, storage, delivery, erection and bracing of trusses and truss systems, see **ANSI/TPI1 Quality Criteria and DSB-22** available from Truss Plate Institute (www.tpinst.org) and **BCSI Building Component Safety Information** available from the Structural Building Component Association (www.sbcacomponents.com)

ENGINEERING BY TRENCO A MiTek Affiliate
818 Soundside Road
Edenton, NC 27932

Job	Truss	Truss Type	Qty	Ply	JSJ, Magnolia Prime
4619354	D01	Common Supported Gable	1	1	Job Reference (optional) I70941787

Builders FirstSource (Sumter, SC), Sumter, SC - 29153,

Run: 8.63 S Sep 26 2024 Print: 8.630 S Sep 26 2024 MiTek Industries, Inc. Wed Jan 22 12:49:15 Page: 1
ID:dzUlbrs04xYE8ilv03DlYAzkzY0-RfC?PsB70Hq3NSgPqnL8w3uITXbGKWrCDoi7J4zJC?f

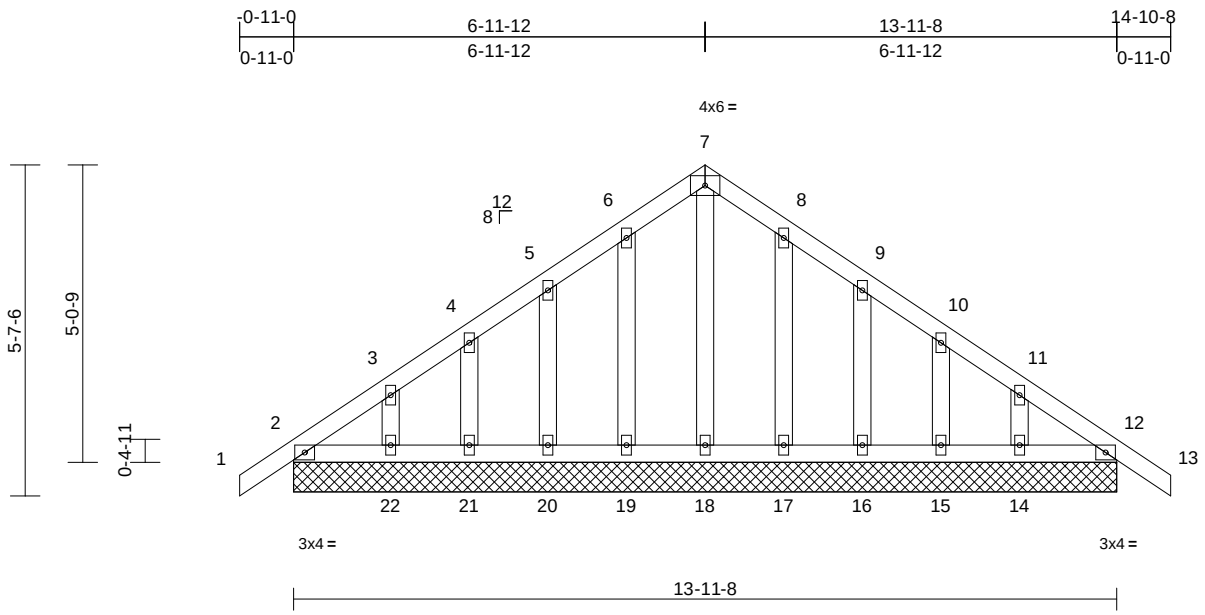

Scale = 1:39.1

Loading	(psf)	Spacing	2-0-0	CSI		DEFL	in	(loc)	l/defl	L/d	PLATES	GRIP
TCLL (roof)	20.0	Plate Grip DOL	1.15	TC	0.06	Vert(LL)	n/a	-	n/a	999	MT20	244/190
TCDL	10.0	Lumber DOL	1.15	BC	0.03	Vert(CT)	n/a	-	n/a	999		
BCLL	0.0*	Rep Stress Incr	YES	WB	0.05	Horz(CT)	0.00	12	n/a	n/a		
BCDL	10.0	Code	IRC2015/TPI2014	Matrix-MS							Weight: 83 lb	FT = 20%

LUMBER
TOP CHORD 2x4 SP No.2
BOT CHORD 2x4 SP No.2
OTHERS 2x4 SP No.3

BRACING
TOP CHORD Structural wood sheathing directly applied or 6-0-0 oc purlins.
BOT CHORD Rigid ceiling directly applied or 10-0-0 oc bracing.

REACTIONS (size) 2=13-11-8, 12=13-11-8, 14=13-11-8, 15=13-11-8, 16=13-11-8, 17=13-11-8, 18=13-11-8, 19=13-11-8, 20=13-11-8, 21=13-11-8, 22=13-11-8, 23=13-11-8, 27=13-11-8
Max Horiz 2=-176 (LC 10), 23=-176 (LC 10)
Max Uplift 2=-41 (LC 8), 12=-6 (LC 9), 14=-76 (LC 13), 15=-65 (LC 13), 16=-74 (LC 13), 17=-59 (LC 13), 19=-63 (LC 12), 20=-73 (LC 12), 21=-65 (LC 12), 22=-79 (LC 12), 23=-41 (LC 8), 27=-6 (LC 9)
Max Grav 2=136 (LC 20), 12=136 (LC 1), 14=134 (LC 20), 15=116 (LC 20), 16=122 (LC 20), 17=122 (LC 20), 18=129 (LC 22), 19=126 (LC 19), 20=121 (LC 19), 21=116 (LC 19), 22=136 (LC 19), 23=136 (LC 20), 27=136 (LC 1)

FORCES (lb) - Maximum Compression/Maximum Tension
TOP CHORD 1-2=0/31, 2-3=-133/121, 3-4=-103/97, 4-5=-89/90, 5-6=-99/124, 6-7=-139/160, 7-8=-139/160, 8-9=-99/113, 9-10=-51/55, 10-11=-52/34, 11-12=-90/77, 12-13=0/31
BOT CHORD 2-22=-85/132, 21-22=-85/132, 20-21=-85/132, 19-20=-85/132, 18-19=-85/132, 17-18=-85/132, 16-17=-85/132, 15-16=-85/132, 14-15=-85/132, 12-14=-85/132
WEBS 7-18=-112/58, 6-19=-100/79, 5-20=-112/88, 4-21=-105/83, 3-22=-129/87, 8-17=-100/75, 9-16=-112/90, 10-15=-105/83, 11-14=-130/86

NOTES
1) Unbalanced roof live loads have been considered for this design.
2) Wind: ASCE 7-10; Vult=130mph (3-second gust) Vasd=103mph; TCDL=6.0psf; BCDL=6.0psf; h=25ft; Cat. II; Exp C; Enclosed; MWFRS (envelope) exterior zone and C-C Exterior (2) zone; cantilever left and right exposed ; end vertical left and right exposed;C-C for members and forces & MWFRS for reactions shown; Lumber DOL=1.60 plate grip DOL=1.60
3) Truss designed for wind loads in the plane of the truss only. For studs exposed to wind (normal to the face), see Standard Industry Gable End Details as applicable, or consult qualified building designer as per ANSI/TPI 1.
4) All plates are 2x4 MT20 unless otherwise indicated.
5) Gable requires continuous bottom chord bearing.
6) Gable studs spaced at 1-4-0 oc.
7) This truss has been designed for a 10.0 psf bottom chord live load nonconcurrent with any other live loads.
8) * This truss has been designed for a live load of 20.0psf on the bottom chord in all areas where a rectangle 3-06-00 tall by 2-00-00 wide will fit between the bottom chord and any other members.
9) All bearings are assumed to be SP No.2 crushing capacity of 565 psi.
10) Provide mechanical connection (by others) of truss to bearing plate capable of withstanding 41 lb uplift at joint 2, 6 lb uplift at joint 12, 63 lb uplift at joint 19, 73 lb uplift at joint 20, 65 lb uplift at joint 21, 79 lb uplift at joint 22, 59 lb uplift at joint 17, 74 lb uplift at joint 16, 65 lb uplift at joint 15, 76 lb uplift at joint 14, 41 lb uplift at joint 2 and 6 lb uplift at joint 12.
11) Beveled plate or shim required to provide full bearing surface with truss chord at joint(s) 2, 23.

LOAD CASE(S) Standard

January 24,2025

WARNING - Verify design parameters and READ NOTES ON THIS AND INCLUDED MITEK REFERENCE PAGE MII-7473 rev. 1/2/2023 BEFORE USE.
Design valid for use only with MiTek® connectors. This design is based only upon parameters shown, and is for an individual building component, not a truss system. Before use, the building designer must verify the applicability of design parameters and properly incorporate this design into the overall building design. Bracing indicated is to prevent buckling of individual truss web and/or chord members only. Additional temporary and permanent bracing is always required for stability and to prevent collapse with possible personal injury and property damage. For general guidance regarding the fabrication, storage, delivery, erection and bracing of trusses and truss systems, see **ANSI/TPI1 Quality Criteria and DSB-22** available from Truss Plate Institute (www.tpinst.org) and **BCSI Building Component Safety Information** available from the Structural Building Component Association (www.sbcacomponents.com)

ENGINEERING BY TRENCO A MiTek Affiliate
818 Soundside Road
Edenton, NC 27932

Job	Truss	Truss Type	Qty	Ply	JSJ, Magnolia Prime
4619354	E01	Common Supported Gable	1	1	Job Reference (optional) I70941788

Builders FirstSource (Sumter, SC), Sumter, SC - 29153,

Run: 8.63 S Sep 26 2024 Print: 8.630 S Sep 26 2024 MiTek Industries, Inc. Wed Jan 22 12:49:15 Page: 1
ID:gfYiWwAy0dXaTZ5WQY7TWSzkzSR-RfC?PsB70Hq3NSgPqnL8w3uITXbGKWrCDoi7J4zJC?f

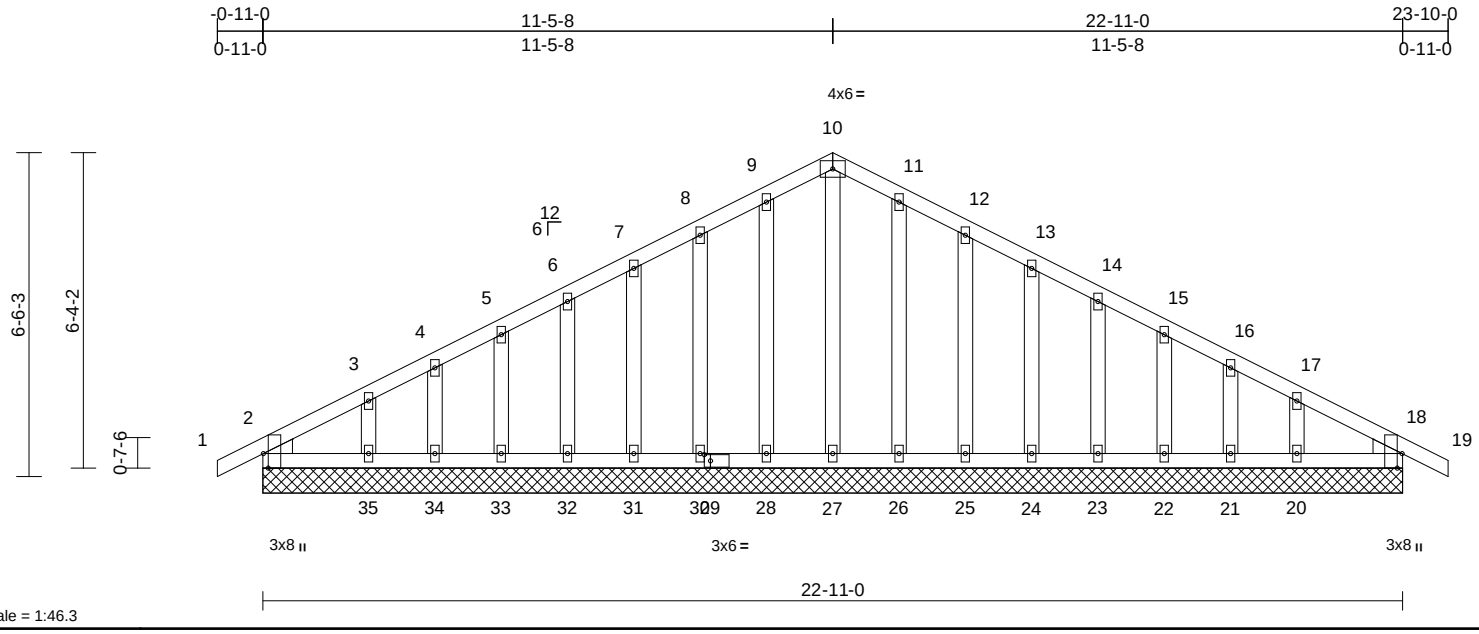

Scale = 1:46.3

Plate Offsets (X, Y): [2:0-3-8,Edge], [18:0-3-8,Edge], [29:0-1-8,0-1-8]

Loading	(psf)	Spacing	2-0-0	CSI		DEFL	in	(loc)	l/defl	L/d	PLATES	GRIP
TCLL (roof)	20.0	Plate Grip DOL	1.15	TC	0.07	Vert(LL)	n/a	-	n/a	999	MT20	244/190
TCDL	10.0	Lumber DOL	1.15	BC	0.06	Vert(CT)	n/a	-	n/a	999		
BCLL	0.0*	Rep Stress Incr	YES	WB	0.10	Horz(CT)	0.01	18	n/a	n/a		
BCDL	10.0	Code	IRC2015/TPI2014	Matrix-MS							Weight: 151 lb	FT = 20%

LUMBER

TOP CHORD 2x4 SP No.2
BOT CHORD 2x4 SP No.2
OTHERS 2x4 SP No.3
WEDGE Left: 2x4 SP No.3
Right: 2x4 SP No.3

BRACING

TOP CHORD Structural wood sheathing directly applied or 6-0-0 oc purlins.
BOT CHORD Rigid ceiling directly applied or 10-0-0 oc bracing.

REACTIONS (size) 2=22-11-0, 18=22-11-0, 20=22-11-0, 21=22-11-0, 22=22-11-0, 23=22-11-0, 24=22-11-0, 25=22-11-0, 26=22-11-0, 27=22-11-0, 28=22-11-0, 30=22-11-0, 31=22-11-0, 32=22-11-0, 33=22-11-0, 34=22-11-0, 35=22-11-0, 36=22-11-0, 39=22-11-0
Max Horiz 2=-139 (LC 13), 36=-139 (LC 13)
Max Uplift 2=-37 (LC 13), 18=-13 (LC 9), 20=-105 (LC 13), 21=-37 (LC 13), 22=-59 (LC 13), 23=-54 (LC 13), 24=-54 (LC 13), 25=-61 (LC 13), 26=-41 (LC 13), 28=-45 (LC 12), 30=-60 (LC 12), 31=-55 (LC 12), 32=-54 (LC 12), 33=-60 (LC 12), 34=-33 (LC 12), 35=-118 (LC 12), 36=-37 (LC 13), 39=-13 (LC 9)
Max Grav 2=149 (LC 1), 18=149 (LC 1), 20=148 (LC 24), 21=93 (LC 1), 22=110 (LC 24), 23=106 (LC 1), 24=107 (LC 1), 25=107 (LC 24), 26=110 (LC 24), 27=135 (LC 22), 28=110 (LC 23), 30=107 (LC 23), 31=107 (LC 1), 32=106 (LC 1), 33=110 (LC 23), 34=93 (LC 1), 35=148 (LC 23), 36=149 (LC 1), 39=149 (LC 1)

FORCES (lb) - Maximum Compression/Maximum Tension

TOP CHORD 1-2=0/25, 2-3=-149/70, 3-4=-98/75, 4-5=-72/95, 5-6=-55/117, 6-7=-54/139, 7-8=-68/164, 8-9=-84/210, 9-10=-97/245, 10-11=-97/245, 11-12=-84/210, 12-13=-68/164, 13-14=-54/122, 14-15=-39/79, 15-16=-34/39, 16-17=-52/21, 17-18=-92/32, 18-19=0/25
BOT CHORD 2-35=-45/132, 34-35=-31/132, 33-34=-31/132, 32-33=-31/132, 31-32=-31/132, 30-31=-31/132, 28-30=-31/132, 27-28=-31/132, 26-27=-31/132, 25-26=-31/132, 24-25=-31/132, 23-24=-31/132, 22-23=-31/132, 21-22=-31/132, 20-21=-31/132, 18-20=-31/132
WEBS 10-27=-137/23, 9-28=-83/62, 8-30=-80/88, 7-31=-80/79, 6-32=-80/80, 5-33=-81/81, 4-34=-74/74, 3-35=-101/106, 11-26=-83/62, 12-25=-80/88, 13-24=-80/79, 14-23=-80/80, 15-22=-81/82, 16-21=-74/74, 17-20=-101/107

NOTES

1) Unbalanced roof live loads have been considered for this design.
2) Wind: ASCE 7-10; Vult=130mph (3-second gust) Vasd=103mph; TCDL=6.0psf; BCDL=6.0psf; h=25ft; Cat. II; Exp C; Enclosed; MWFRS (envelope) exterior zone and C-C Exterior (2) zone; cantilever left and right exposed ; end vertical left and right exposed;C-C for members and forces & MWFRS for reactions shown; Lumber DOL=1.60 plate grip DOL=1.60
3) Truss designed for wind loads in the plane of the truss only. For studs exposed to wind (normal to the face), see Standard Industry Gable End Details as applicable, or consult qualified building designer as per ANSI/TPI 1.
4) All plates are 2x4 MT20 unless otherwise indicated.
5) Gable requires continuous bottom chord bearing.
6) Gable studs spaced at 1-4-0 oc.
7) This truss has been designed for a 10.0 psf bottom chord live load nonconcurrent with any other live loads.
8) * This truss has been designed for a live load of 20.0psf on the bottom chord in all areas where a rectangle 3-06-00 tall by 2-00-00 wide will fit between the bottom chord and any other members.
9) All bearings are assumed to be SP No.2 crushing capacity of 565 psi.

January 24,2025

Continued on page 2

WARNING - Verify design parameters and READ NOTES ON THIS AND INCLUDED MITEK REFERENCE PAGE MII-7473 rev. 1/2/2023 BEFORE USE.
Design valid for use only with MiTek® connectors. This design is based only upon parameters shown, and is for an individual building component, not a truss system. Before use, the building designer must verify the applicability of design parameters and properly incorporate this design into the overall building design. Bracing indicated is to prevent buckling of individual truss web and/or chord members only. Additional temporary and permanent bracing is always required for stability and to prevent collapse with possible personal injury and property damage. For general guidance regarding the fabrication, storage, delivery, erection and bracing of trusses and truss systems, see **ANSI/TPI1 Quality Criteria and DSB-22** available from Truss Plate Institute (www.tpinst.org) and **BCSI Building Component Safety Information** available from the Structural Building Component Association (www.sbcacomponents.com)

ENGINEERING BY TRENCO A MiTek Affiliate
818 Soundside Road
Edenton, NC 27932

10) Provide mechanical connection (by others) of truss to bearing plate capable of withstanding 37 lb uplift at joint 2, 13 lb uplift at joint 18, 45 lb uplift at joint 28, 60 lb uplift at joint 30, 55 lb uplift at joint 31, 54 lb uplift at joint 32, 60 lb uplift at joint 33, 33 lb uplift at joint 34, 118 lb uplift at joint 35, 41 lb uplift at joint 26, 61 lb uplift at joint 25, 54 lb uplift at joint 24, 54 lb uplift at joint 23, 59 lb uplift at joint 22, 37 lb uplift at joint 21, 105 lb uplift at joint 20, 37 lb uplift at joint 2 and 13 lb uplift at joint 18.

LOAD CASE(S) Standard

WARNING - Verify design parameters and READ NOTES ON THIS AND INCLUDED MITEK REFERENCE PAGE MII-7473 rev. 1/2/2023 BEFORE USE.
Design valid for use only with MiTek® connectors. This design is based only upon parameters shown, and is for an individual building component, not a truss system. Before use, the building designer must verify the applicability of design parameters and properly incorporate this design into the overall building design. Bracing indicated is to prevent buckling of individual truss web and/or chord members only. Additional temporary and permanent bracing is always required for stability and to prevent collapse with possible personal injury and property damage. For general guidance regarding the fabrication, storage, delivery, erection and bracing of trusses and truss systems, see **ANSI/TPI1 Quality Criteria and DSB-22** available from Truss Plate Institute (www.tpinst.org) and **BCSI Building Component Safety Information** available from the Structural Building Component Association (www.sbcacomponents.com)

ENGINEERING BY TRENCO A MiTek Affiliate
818 Soundside Road
Edenton, NC 27932

Job	Truss	Truss Type	Qty	Ply	JSJ, Magnolia Prime
4619354	E02	Common	2	1	Job Reference (optional) I70941789

Builders FirstSource (Sumter, SC), Sumter, SC - 29153, Run: 8.63 S Sep 26 2024 Print: 8.630 S Sep 26 2024 MiTek Industries, Inc. Wed Jan 22 12:49:15 Page: 1
ID:rz8b7FhsQLUFgQ1q48P5u0zkzT3-RfC?PsB70Hq3NSgPqnL8w3uITXbGKWrCDoi7J4zJC?f

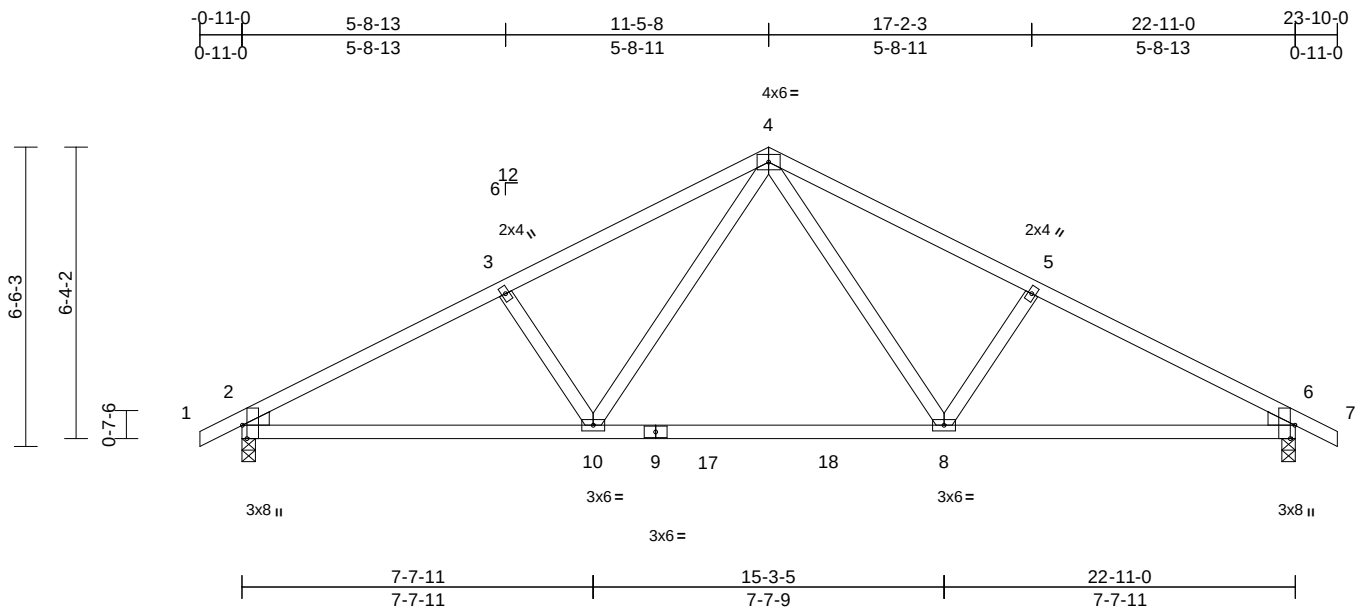

Scale = 1:50.1

Plate Offsets (X, Y): [2:0-3-8,Edge], [6:0-3-8,Edge]

Loading	(psf)	Spacing	2-0-0	CSI		DEFL	in	(loc)	l/defl	L/d	PLATES	GRIP
TCLL (roof)	20.0	Plate Grip DOL	1.15	TC	0.43	Vert(LL)	-0.15	8-10	>999	360	MT20	244/190
TCDL	10.0	Lumber DOL	1.15	BC	0.61	Vert(CT)	-0.26	8-10	>999	240		
BCLL	0.0*	Rep Stress Incr	YES	WB	0.20	Horz(CT)	0.04	6	n/a	n/a		
BCDL	10.0	Code	IRC2015/TPI2014	Matrix-MS		Wind(LL)	0.07	8-10	>999	240	Weight: 108 lb	FT = 20%

LUMBER
TOP CHORD 2x4 SP No.2
BOT CHORD 2x4 SP No.2
WEBS 2x4 SP No.3
WEDGE Left: 2x4 SP No.3
Right: 2x4 SP No.3

BRACING
TOP CHORD Structural wood sheathing directly applied or 4-4-5 oc purlins.
BOT CHORD Rigid ceiling directly applied or 8-6-1 oc bracing.

REACTIONS (size) 2=0-3-8, 6=0-3-8
Max Horiz 2=-139 (LC 13)
Max Uplift 2=-270 (LC 12), 6=-270 (LC 13)
Max Grav 2=972 (LC 1), 6=972 (LC 1)

FORCES (lb) - Maximum Compression/Maximum Tension
TOP CHORD 1-2=0/25, 2-3=-1499/667, 3-4=-1333/666, 4-5=-1333/666, 5-6=-1499/667, 6-7=0/25
BOT CHORD 2-10=-471/1279, 8-10=-202/872, 6-8=-474/1279
WEBS 4-8=-199/487, 5-8=-315/309, 4-10=-199/487, 3-10=-315/309

NOTES
1) Unbalanced roof live loads have been considered for this design.
2) Wind: ASCE 7-10; Vult=130mph (3-second gust) Vasd=103mph; TCDL=6.0psf; BCDL=6.0psf; h=25ft; Cat. II; Exp C; Enclosed; MWFRS (envelope) exterior zone and C-C Exterior (2) zone; cantilever left and right exposed ; end vertical left and right exposed;C-C for members and forces & MWFRS for reactions shown; Lumber DOL=1.60 plate grip DOL=1.60
3) This truss has been designed for a 10.0 psf bottom chord live load nonconcurrent with any other live loads.
4) * This truss has been designed for a live load of 20.0psf on the bottom chord in all areas where a rectangle 3-06-00 tall by 2-00-00 wide will fit between the bottom chord and any other members, with BCDL = 10.0psf.
5) All bearings are assumed to be SP No.2 crushing capacity of 565 psi.
6) Provide mechanical connection (by others) of truss to bearing plate capable of withstanding 270 lb uplift at joint 2 and 270 lb uplift at joint 6.

LOAD CASE(S) Standard

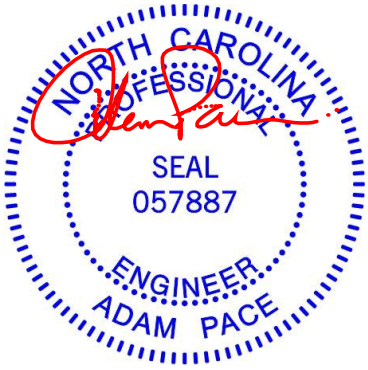

January 24,2025

WARNING - Verify design parameters and READ NOTES ON THIS AND INCLUDED MITEK REFERENCE PAGE MII-7473 rev. 1/2/2023 BEFORE USE.
Design valid for use only with MiTek® connectors. This design is based only upon parameters shown, and is for an individual building component, not a truss system. Before use, the building designer must verify the applicability of design parameters and properly incorporate this design into the overall building design. Bracing indicated is to prevent buckling of individual truss web and/or chord members only. Additional temporary and permanent bracing is always required for stability and to prevent collapse with possible personal injury and property damage. For general guidance regarding the fabrication, storage, delivery, erection and bracing of trusses and truss systems, see **ANSI/TPI1 Quality Criteria and DSB-22** available from Truss Plate Institute (www.tpinst.org) and **BCSI Building Component Safety Information** available from the Structural Building Component Association (www.sbcacomponents.com)

ENGINEERING BY TRENCO A MiTek Affiliate
818 Soundside Road
Edenton, NC 27932

Job	Truss	Truss Type	Qty	Ply	JSJ, Magnolia Prime
4619354	E03	Common	5	1	Job Reference (optional) I70941790

Builders FirstSource (Sumter, SC), Sumter, SC - 29153, Run: 8.63 S Sep 26 2024 Print: 8.630 S Sep 26 2024 MiTek Industries, Inc. Wed Jan 22 12:49:15 Page: 1
ID:FdwQ1WYPi9RAhKyTkYBkG?zkzRy-RfC?PsB70Hq3NSgPqnL8w3uITXbGKWrCDoi7J4zJC?f

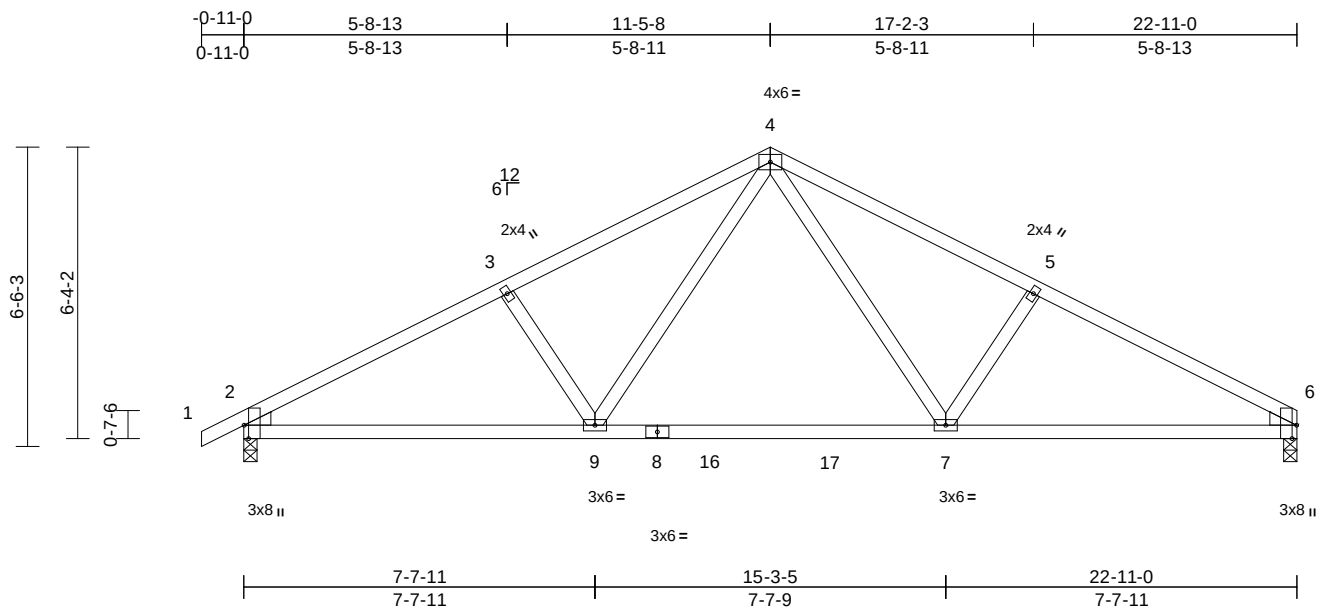

Scale = 1:50.1

Plate Offsets (X, Y): [2:0-3-8,Edge], [6:0-3-8,Edge]

Loading	(psf)	Spacing	2-0-0	CSI		DEFL	in	(loc)	l/defl	L/d	PLATES	GRIP
TCLL (roof)	20.0	Plate Grip DOL	1.15	TC	0.43	Vert(LL)	-0.15	7-9	>999	360	MT20	244/190
TCDL	10.0	Lumber DOL	1.15	BC	0.61	Vert(CT)	-0.26	7-9	>999	240		
BCLL	0.0*	Rep Stress Incr	YES	WB	0.20	Horz(CT)	0.04	6	n/a	n/a		
BCDL	10.0	Code	IRC2015/TPI2014	Matrix-MS		Wind(LL)	0.07	7-9	>999	240	Weight: 107 lb	FT = 20%

LUMBER
TOP CHORD 2x4 SP No.2
BOT CHORD 2x4 SP No.2
WEBS 2x4 SP No.3
WEDGE Left: 2x4 SP No.3
Right: 2x4 SP No.3

BRACING
TOP CHORD Structural wood sheathing directly applied or 4-4-5 oc purlins.
BOT CHORD Rigid ceiling directly applied or 8-3-4 oc bracing.

REACTIONS (size) 2=0-3-8, 6=0-3-8
Max Horiz 2=150 (LC 16)
Max Uplift 2=-271 (LC 12), 6=-240 (LC 13)
Max Grav 2=973 (LC 1), 6=916 (LC 1)

FORCES (lb) - Maximum Compression/Maximum Tension
TOP CHORD 1-2=0/25, 2-3=-1501/669, 3-4=-1335/669, 4-5=-1339/671, 5-6=-1506/672
BOT CHORD 2-9=-499/1281, 7-9=-228/874, 6-7=-502/1286
WEBS 4-7=-202/493, 5-7=-318/311, 4-9=-198/487, 3-9=-315/309

NOTES
1) Unbalanced roof live loads have been considered for this design.
2) Wind: ASCE 7-10; Vult=130mph (3-second gust) Vasd=103mph; TCDL=6.0psf; BCDL=6.0psf; h=25ft; Cat. II; Exp C; Enclosed; MWFRS (envelope) exterior zone and C-C Exterior (2) zone; cantilever left and right exposed ; end vertical left and right exposed;C-C for members and forces & MWFRS for reactions shown; Lumber DOL=1.60 plate grip DOL=1.60
3) This truss has been designed for a 10.0 psf bottom chord live load nonconcurrent with any other live loads.
4) * This truss has been designed for a live load of 20.0psf on the bottom chord in all areas where a rectangle 3-06-00 tall by 2-00-00 wide will fit between the bottom chord and any other members, with BCDL = 10.0psf.
5) All bearings are assumed to be SP No.2 crushing capacity of 565 psi.
6) Provide mechanical connection (by others) of truss to bearing plate capable of withstanding 271 lb uplift at joint 2 and 240 lb uplift at joint 6.

LOAD CASE(S) Standard

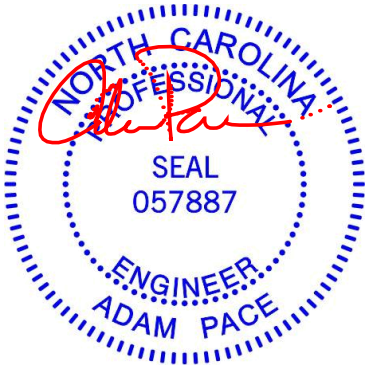

January 24,2025

WARNING - Verify design parameters and READ NOTES ON THIS AND INCLUDED MITEK REFERENCE PAGE MII-7473 rev. 1/2/2023 BEFORE USE.
Design valid for use only with MiTek® connectors. This design is based only upon parameters shown, and is for an individual building component, not a truss system. Before use, the building designer must verify the applicability of design parameters and properly incorporate this design into the overall building design. Bracing indicated is to prevent buckling of individual truss web and/or chord members only. Additional temporary and permanent bracing is always required for stability and to prevent collapse with possible personal injury and property damage. For general guidance regarding the fabrication, storage, delivery, erection and bracing of trusses and truss systems, see **ANSI/TPI1 Quality Criteria and DSB-22** available from Truss Plate Institute (www.tpinst.org) and **BCSI Building Component Safety Information** available from the Structural Building Component Association (www.sbcacomponents.com)

ENGINEERING BY TRENCO A MiTek Affiliate
818 Soundside Road
Edenton, NC 27932

Job	Truss	Truss Type	Qty	Ply	JSJ, Magnolia Prime
4619354	G01	Common Supported Gable	1	1	I70941791 Job Reference (optional)

Builders FirstSource (Sumter, SC), Sumter, SC - 29153,

Run: 8.63 S Sep 26 2024 Print: 8.630 S Sep 26 2024 MiTek Industries, Inc. Wed Jan 22 12:49:15 Page: 1
ID:h5IYeE1w_eotK4HwuANLCjzkzQ2-RfC?PsB70Hq3NSgPqnL8w3uITXbGKWrCDoi7J4zJC?f

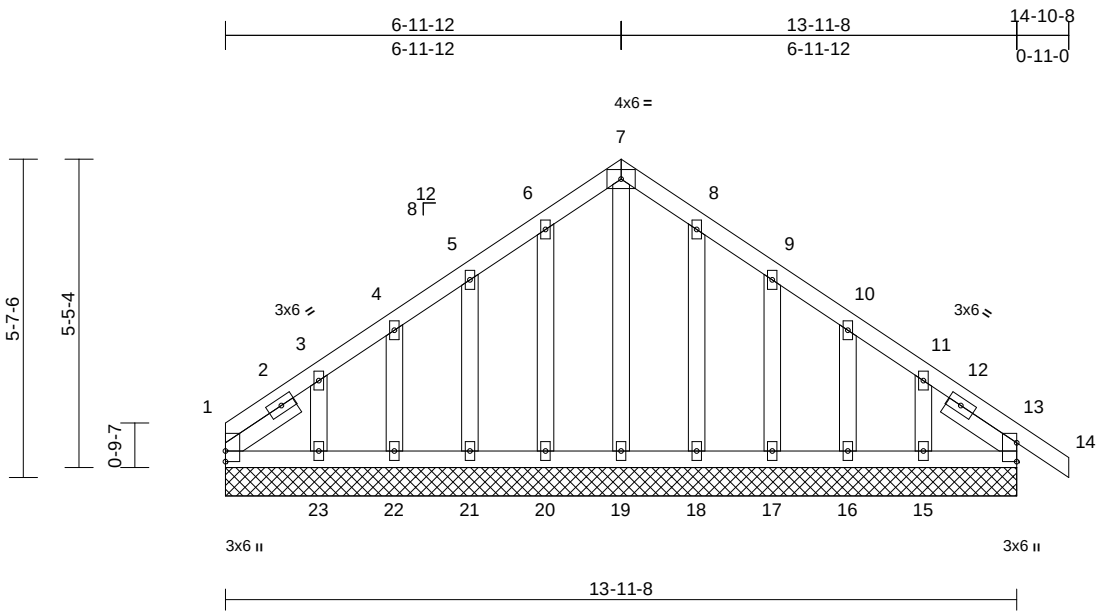

Scale = 1:40.6

Plate Offsets (X, Y): [13:Edge,0-0-0]

Loading	(psf)	Spacing	2-0-0	CSI		DEFL	in	(loc)	l/defl	L/d	PLATES	GRIP
TCLL (roof)	20.0	Plate Grip DOL	1.15	TC	0.06	Vert(LL)	n/a	-	n/a	999	MT20	244/190
TCDL	10.0	Lumber DOL	1.15	BC	0.04	Vert(CT)	n/a	-	n/a	999		
BCLL	0.0*	Rep Stress Incr	YES	WB	0.06	Horz(CT)	0.00	13	n/a	n/a		
BCDL	10.0	Code	IRC2015/TPI2014	Matrix-MS							Weight: 91 lb	FT = 20%

LUMBER

TOP CHORD 2x4 SP No.2
BOT CHORD 2x4 SP No.2
OTHERS 2x4 SP No.3
SLIDER Left 2x4 SP No.2 -- 1-6-0, Right 2x4 SP No.2 -- 1-6-0

BRACING

TOP CHORD Structural wood sheathing directly applied or 6-0-0 oc purlins.
BOT CHORD Rigid ceiling directly applied or 10-0-0 oc bracing.

REACTIONS (size) 1=13-11-8, 13=13-11-8, 15=13-11-8, 16=13-11-8, 17=13-11-8, 18=13-11-8, 19=13-11-8, 20=13-11-8, 21=13-11-8, 22=13-11-8, 23=13-11-8, 24=13-11-8, 28=13-11-8
Max Horiz 1=-169 (LC 10), 24=-169 (LC 10)
Max Uplift 1=-60 (LC 8), 13=-18 (LC 9), 15=-121 (LC 13), 16=-54 (LC 13), 17=-77 (LC 13), 18=-57 (LC 13), 20=-60 (LC 12), 21=-77 (LC 12), 22=-49 (LC 12), 23=-142 (LC 12), 24=-60 (LC 8), 28=-18 (LC 9)
Max Grav 1=123 (LC 20), 13=144 (LC 1), 15=147 (LC 20), 16=113 (LC 20), 17=123 (LC 20), 18=122 (LC 20), 19=135 (LC 13), 20=125 (LC 19), 21=124 (LC 19), 22=104 (LC 19), 23=184 (LC 19), 24=123 (LC 20), 28=144 (LC 1)

FORCES (lb) - Maximum Compression/Maximum Tension

TOP CHORD 1-3=-137/129, 3-4=-102/90, 4-5=-90/103, 5-6=-118/137, 6-7=-157/177, 7-8=-157/177, 8-9=-118/131, 9-10=-70/73, 10-11=-59/40, 11-13=-87/65, 13-14=0/31
BOT CHORD 1-23=-69/122, 22-23=-69/122, 21-22=-69/122, 20-21=-69/122, 19-20=-69/122, 18-19=-69/122, 17-18=-69/122, 16-17=-69/122, 15-16=-69/122, 13-15=-69/122
WEBS 7-19=-128/76, 6-20=-99/76, 5-21=-114/91, 4-22=-98/74, 3-23=-143/131, 8-18=-97/73, 9-17=-113/91, 10-16=-101/77, 11-15=-145/117

NOTES

1) Unbalanced roof live loads have been considered for this design.
2) Wind: ASCE 7-10; Vult=130mph (3-second gust) Vasd=103mph; TCDL=6.0psf; BCDL=6.0psf; h=25ft; Cat. II; Exp C; Enclosed; MWFRS (envelope) exterior zone and C-C Exterior (2) zone; cantilever left and right exposed ; end vertical left and right exposed;C-C for members and forces & MWFRS for reactions shown; Lumber DOL=1.60 plate grip DOL=1.60
3) Truss designed for wind loads in the plane of the truss only. For studs exposed to wind (normal to the face), see Standard Industry Gable End Details as applicable, or consult qualified building designer as per ANSI/TPI 1.
4) All plates are 2x4 MT20 unless otherwise indicated.
5) Gable requires continuous bottom chord bearing.
6) Gable studs spaced at 1-4-0 oc.
7) This truss has been designed for a 10.0 psf bottom chord live load nonconcurrent with any other live loads.
8) * This truss has been designed for a live load of 20.0psf on the bottom chord in all areas where a rectangle 3-06-00 tall by 2-00-00 wide will fit between the bottom chord and any other members.
9) All bearings are assumed to be SP No.2 crushing capacity of 565 psi.
10) Provide mechanical connection (by others) of truss to bearing plate capable of withstanding 60 lb uplift at joint 1, 18 lb uplift at joint 13, 60 lb uplift at joint 20, 77 lb uplift at joint 21, 49 lb uplift at joint 22, 142 lb uplift at joint 23, 57 lb uplift at joint 18, 77 lb uplift at joint 17, 54 lb uplift at joint 16, 121 lb uplift at joint 15, 60 lb uplift at joint 1 and 18 lb uplift at joint 13.
11) Beveled plate or shim required to provide full bearing surface with truss chord at joint(s) 1, 13, 24, 28.

LOAD CASE(S) Standard

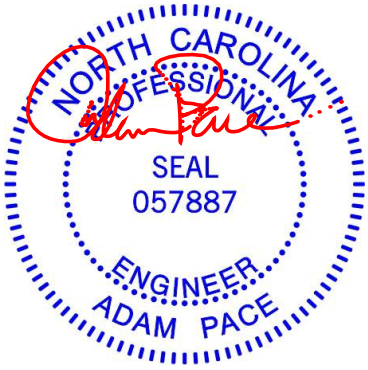

January 24,2025

WARNING - Verify design parameters and READ NOTES ON THIS AND INCLUDED MITEK REFERENCE PAGE MII-7473 rev. 1/2/2023 BEFORE USE.
Design valid for use only with MiTek® connectors. This design is based only upon parameters shown, and is for an individual building component, not a truss system. Before use, the building designer must verify the applicability of design parameters and properly incorporate this design into the overall building design. Bracing indicated is to prevent buckling of individual truss web and/or chord members only. Additional temporary and permanent bracing is always required for stability and to prevent collapse with possible personal injury and property damage. For general guidance regarding the fabrication, storage, delivery, erection and bracing of trusses and truss systems, see **ANSI/TPI1 Quality Criteria and DSB-22** available from Truss Plate Institute (www.tpinst.org) and **BCSI Building Component Safety Information** available from the Structural Building Component Association (www.sbcacomponents.com)

ENGINEERING BY TRENCO A MiTek Affiliate
818 Soundside Road
Edenton, NC 27932

Job	Truss	Truss Type	Qty	Ply	JSJ, Magnolia Prime
4619354	G02	Common	3	1	Job Reference (optional) I70941792

Builders FirstSource (Sumter, SC), Sumter, SC - 29153,

Run: 8.63 S Sep 26 2024 Print: 8.630 S Sep 26 2024 MiTek Industries, Inc. Wed Jan 22 12:49:15 Page: 1
ID:Vu0h2D3NaMr4LxlkI4SpW3zkzRH-RfC?PsB70Hq3NSgPqnL8w3uITXbGKWrCDoi7J4zJC?f

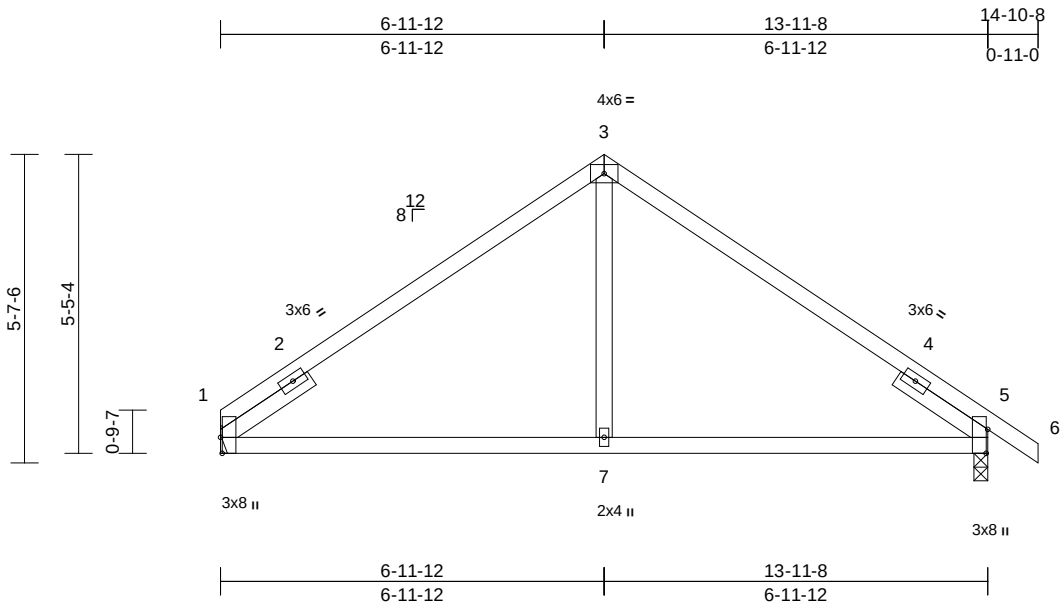

Scale = 1:41.9

Plate Offsets (X, Y): [1:0-3-8,Edge], [5:0-5-4,Edge]

Loading	(psf)	Spacing	2-0-0	CSI		DEFL	in	(loc)	l/defl	L/d	PLATES	GRIP
TCLL (roof)	20.0	Plate Grip DOL	1.15	TC	0.60	Vert(LL)	0.14	7-10	>999	240	MT20	244/190
TCDL	10.0	Lumber DOL	1.15	BC	0.53	Vert(CT)	-0.12	7-10	>999	240		
BCLL	0.0*	Rep Stress Incr	YES	WB	0.24	Horz(CT)	-0.04	1	n/a	n/a		
BCDL	10.0	Code	IRC2015/TPI2014	Matrix-MS							Weight: 61 lb	FT = 20%

LUMBER

TOP CHORD 2x4 SP No.2
BOT CHORD 2x4 SP No.2
WEBS 2x4 SP No.3
SLIDER Left 2x4 SP No.2 -- 1-11-12, Right 2x4 SP No.2 -- 1-11-12

BRACING

TOP CHORD Structural wood sheathing directly applied or 6-0-0 oc purlins.
BOT CHORD Rigid ceiling directly applied or 8-2-9 oc bracing.

REACTIONS (size) 1= Mechanical, 5=0-3-0
Max Horiz 1=-169 (LC 10)
Max Uplift 1=-136 (LC 12), 5=-167 (LC 13)
Max Grav 1=557 (LC 1), 5=615 (LC 1)

FORCES (lb) - Maximum Compression/Maximum Tension
TOP CHORD 1-3=-523/696, 3-5=-523/696, 5-6=0/31
BOT CHORD 1-7=-413/436, 5-7=-413/436
WEBS 3-7=-482/307

NOTES

1) Unbalanced roof live loads have been considered for this design.
2) Wind: ASCE 7-10; Vult=130mph (3-second gust) Vasd=103mph; TCDL=6.0psf; BCDL=6.0psf; h=25ft; Cat. II; Exp C; Enclosed; MWFRS (envelope) exterior zone and C-C Exterior (2) zone; cantilever left and right exposed ; end vertical left and right exposed; porch left and right exposed;C-C for members and forces & MWFRS for reactions shown; Lumber DOL=1.60 plate grip DOL=1.60
3) This truss has been designed for a 10.0 psf bottom chord live load nonconcurrent with any other live loads.
4) * This truss has been designed for a live load of 20.0psf on the bottom chord in all areas where a rectangle 3-06-00 tall by 2-00-00 wide will fit between the bottom chord and any other members.
5) Bearings are assumed to be: , Joint 5 SP No.2 crushing capacity of 565 psi.
6) Refer to girder(s) for truss to truss connections.
7) Provide mechanical connection (by others) of truss to bearing plate at joint(s) 5.
8) Provide mechanical connection (by others) of truss to bearing plate capable of withstanding 136 lb uplift at joint 1 and 167 lb uplift at joint 5.

LOAD CASE(S) Standard

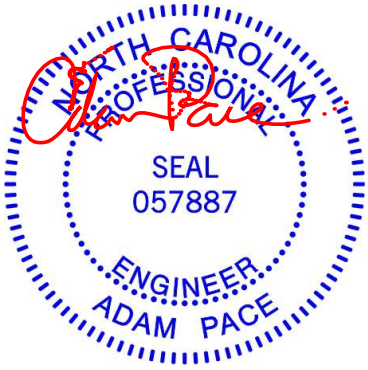

January 24,2025

WARNING - Verify design parameters and READ NOTES ON THIS AND INCLUDED MITEK REFERENCE PAGE MII-7473 rev. 1/2/2023 BEFORE USE.
Design valid for use only with MiTek® connectors. This design is based only upon parameters shown, and is for an individual building component, not a truss system. Before use, the building designer must verify the applicability of design parameters and properly incorporate this design into the overall building design. Bracing indicated is to prevent buckling of individual truss web and/or chord members only. Additional temporary and permanent bracing is always required for stability and to prevent collapse with possible personal injury and property damage. For general guidance regarding the fabrication, storage, delivery, erection and bracing of trusses and truss systems, see **ANSI/TPI1 Quality Criteria and DSB-22** available from Truss Plate Institute (www.tpinst.org) and **BCSI Building Component Safety Information** available from the Structural Building Component Association (www.sbcacomponents.com)

ENGINEERING BY TRENCO A MiTek Affiliate
818 Soundside Road
Edenton, NC 27932

Job	Truss	Truss Type	Qty	Ply	JSJ, Magnolia Prime
4619354	H01	Monopitch Girder	1	1	Job Reference (optional) I70941793

Builders FirstSource (Sumter, SC), Sumter, SC - 29153,

Run: 8.63 S Sep 26 2024 Print: 8.630 S Sep 26 2024 MiTek Industries, Inc. Wed Jan 22 12:49:15 Page: 1
ID:tqdGLtOpMM2qOSQe?PvrIYzkzOH-RfC?PsB70Hq3NSgPqnL8w3uITXbGKWrCDoi7J4zJC?f

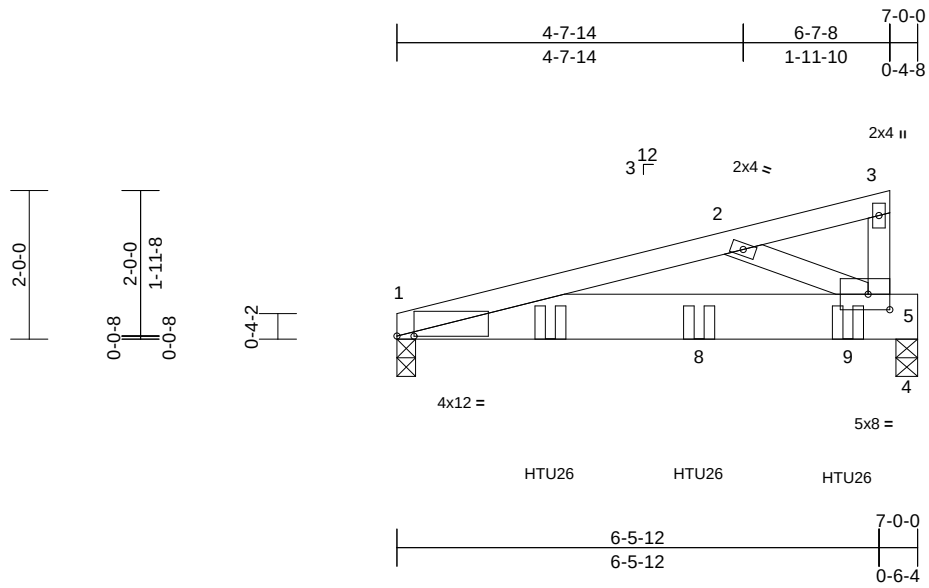

Scale = 1:31

Plate Offsets (X, Y): [1:0-2-12,0-0-0], [5:0-3-8,0-2-8]

Loading	(psf)	Spacing	2-0-0	CSI		DEFL	in	(loc)	l/defl	L/d	PLATES	GRIP
TCLL (roof)	20.0	Plate Grip DOL	1.15	TC	0.88	Vert(LL)	-0.06	5-7	>999	360	MT20	244/190
TCDL	10.0	Lumber DOL	1.15	BC	0.46	Vert(CT)	-0.12	5-7	>694	240		
BCLL	0.0*	Rep Stress Incr	NO	WB	0.09	Horz(CT)	0.01	4	n/a	n/a		
BCDL	10.0	Code	IRC2015/TPI2014	Matrix-MS		Wind(LL)	0.07	5-7	>999	240	Weight: 36 lb	FT = 20%

LUMBER
TOP CHORD 2x4 SP No.2
BOT CHORD 2x8 SP 2400F 2.0E or 2x8 SP DSS
WEBS 2x4 SP No.2

BRACING
TOP CHORD Structural wood sheathing directly applied or 4-7-1 oc purlins, except end verticals.
BOT CHORD Rigid ceiling directly applied or 10-0-0 oc bracing.

REACTIONS (size) 1=0-3-0, 4=0-3-8
Max Horiz 1=85 (LC 4)
Max Uplift 1=-318 (LC 4), 4=-394 (LC 4)
Max Grav 1=922 (LC 1), 4=1206 (LC 1)

FORCES (lb) - Maximum Compression/Maximum Tension
TOP CHORD 1-2=-1479/461, 2-3=-207/50, 3-5=-8/65
BOT CHORD 1-5=-504/1387, 4-5=0/0
WEBS 2-5=-665/286

NOTES
1) Wind: ASCE 7-10; Vult=130mph (3-second gust) Vasd=103mph; TCDL=6.0psf; BCDL=6.0psf; h=25ft; Cat. II; Exp C; Enclosed; MWFRS (envelope) exterior zone; cantilever left and right exposed ; end vertical left exposed; porch left and right exposed; Lumber DOL=1.60 plate grip DOL=1.60
2) This truss has been designed for a 10.0 psf bottom chord live load nonconcurrent with any other live loads.
3) * This truss has been designed for a live load of 20.0psf on the bottom chord in all areas where a rectangle 3-06-00 tall by 2-00-00 wide will fit between the bottom chord and any other members.
4) All bearings are assumed to be SP 2400F 2.0E or DSS crushing capacity of 660 psi.
5) Provide mechanical connection (by others) of truss to bearing plate at joint(s) 1.
6) Provide mechanical connection (by others) of truss to bearing plate capable of withstanding 318 lb uplift at joint 1 and 394 lb uplift at joint 4.
7) Use Simpson Strong-Tie HTU26 (10-16d Girder, 14-10dx1 1/2 Truss) or equivalent spaced at 2-0-0 oc max. starting at 2-0-12 from the left end to 6-0-12 to connect truss(es) to front face of bottom chord.
8) Fill all nail holes where hanger is in contact with lumber.
9) In the LOAD CASE(S) section, loads applied to the face of the truss are noted as front (F) or back (B).

LOAD CASE(S) Standard
1) Dead + Roof Live (balanced): Lumber Increase=1.15, Plate Increase=1.15
Uniform Loads (lb/ft)
Vert: 1-3=-60, 1-4=-20
Concentrated Loads (lb)
Vert: 7=-537 (F), 8=-537 (F), 9=-539 (F)

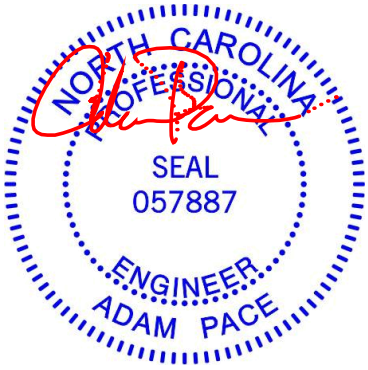

January 24,2025

WARNING - Verify design parameters and READ NOTES ON THIS AND INCLUDED MITEK REFERENCE PAGE MII-7473 rev. 1/2/2023 BEFORE USE.
Design valid for use only with MiTek® connectors. This design is based only upon parameters shown, and is for an individual building component, not a truss system. Before use, the building designer must verify the applicability of design parameters and properly incorporate this design into the overall building design. Bracing indicated is to prevent buckling of individual truss web and/or chord members only. Additional temporary and permanent bracing is always required for stability and to prevent collapse with possible personal injury and property damage. For general guidance regarding the fabrication, storage, delivery, erection and bracing of trusses and truss systems, see **ANSI/TPI1 Quality Criteria and DSB-22** available from Truss Plate Institute (www.tpinst.org) and **BCSI Building Component Safety Information** available from the Structural Building Component Association (www.sbcacomponents.com)

ENGINEERING BY TRENCO A MiTek Affiliate
818 Soundside Road
Edenton, NC 27932

Job	Truss	Truss Type	Qty	Ply	JSJ, Magnolia Prime
4619354	H02	Monopitch	2	1	Job Reference (optional) I70941794

Builders FirstSource (Sumter, SC), Sumter, SC - 29153,

Run: 8.63 S Sep 26 2024 Print: 8.630 S Sep 26 2024 MiTek Industries, Inc. Wed Jan 22 12:49:15 Page: 1
ID:Vmoh6Q1Y1LVvXy5XnBpz7WzkzKt-RfC?PsB70Hq3NSgPqnL8w3uITXbGKWrCDoi7J4zJC?f

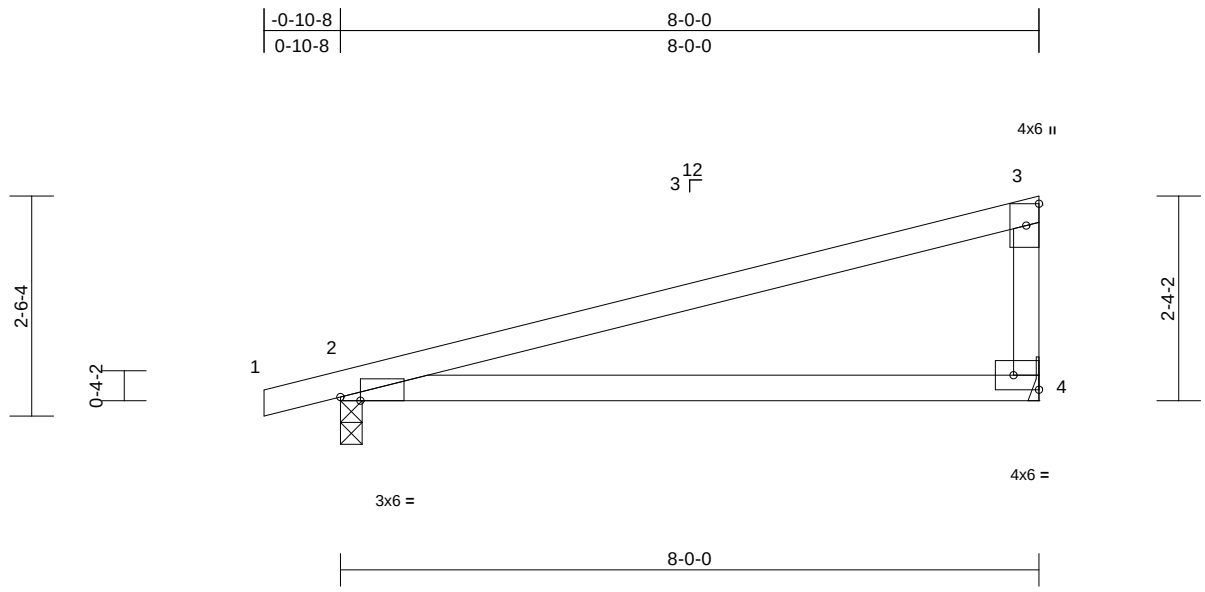

Scale = 1:26.4

Plate Offsets (X, Y): [2:0-2-12,Edge], [4:Edge,0-2-0]

Loading	(psf)	Spacing	2-0-0	CSI		DEFL	in	(loc)	l/defl	L/d	PLATES	GRIP
TCLL (roof)	20.0	Plate Grip DOL	1.15	TC	0.73	Vert(LL)	0.37	4-7	>258	240	MT20	244/190
TCDL	10.0	Lumber DOL	1.15	BC	0.57	Vert(CT)	-0.25	4-7	>373	240		
BCLL	0.0*	Rep Stress Incr	YES	WB	0.00	Horz(CT)	-0.01	2	n/a	n/a		
BCDL	10.0	Code	IRC2015/TPI2014	Matrix-MS							Weight: 28 lb	FT = 20%

LUMBER
TOP CHORD 2x4 SP No.2
BOT CHORD 2x4 SP No.1
WEBS 2x4 SP No.2

BRACING
TOP CHORD Structural wood sheathing directly applied or 6-0-0 oc purlins, except end verticals.
BOT CHORD Rigid ceiling directly applied or 8-11-13 oc bracing.

REACTIONS (size) 2=0-3-0, 4= Mechanical
Max Horiz 2=118 (LC 8)
Max Uplift 2=-248 (LC 8), 4=-218 (LC 8)
Max Grav 2=370 (LC 1), 4=311 (LC 1)

FORCES (lb) - Maximum Compression/Maximum Tension
TOP CHORD 1-2=0/13, 2-3=-213/306, 3-4=-191/212
BOT CHORD 2-4=-377/217

NOTES
1) Wind: ASCE 7-10; Vult=130mph (3-second gust) Vasd=103mph; TCDL=6.0psf; BCDL=6.0psf; h=25ft; Cat. II; Exp C; Enclosed; MWFRS (envelope) exterior zone and C-C Exterior (2) zone; cantilever left and right exposed ; end vertical left exposed; porch left and right exposed;C-C for members and forces & MWFRS for reactions shown; Lumber DOL=1.60 plate grip DOL=1.60
2) This truss has been designed for a 10.0 psf bottom chord live load nonconcurrent with any other live loads.
3) * This truss has been designed for a live load of 20.0psf on the bottom chord in all areas where a rectangle 3-06-00 tall by 2-00-00 wide will fit between the bottom chord and any other members.
4) Bearings are assumed to be: Joint 2 SP No.1 crushing capacity of 565 psi.
5) Refer to girder(s) for truss to truss connections.
6) Provide mechanical connection (by others) of truss to bearing plate capable of withstanding 218 lb uplift at joint 4 and 248 lb uplift at joint 2.

LOAD CASE(S) Standard

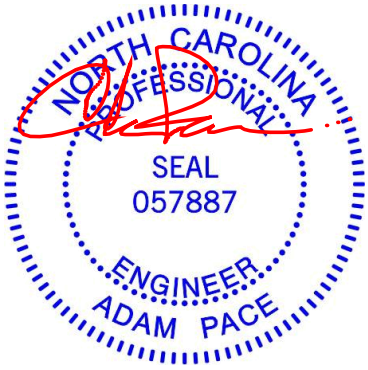

January 24,2025

WARNING - Verify design parameters and READ NOTES ON THIS AND INCLUDED MITEK REFERENCE PAGE MII-7473 rev. 1/2/2023 BEFORE USE.
Design valid for use only with MiTek® connectors. This design is based only upon parameters shown, and is for an individual building component, not a truss system. Before use, the building designer must verify the applicability of design parameters and properly incorporate this design into the overall building design. Bracing indicated is to prevent buckling of individual truss web and/or chord members only. Additional temporary and permanent bracing is always required for stability and to prevent collapse with possible personal injury and property damage. For general guidance regarding the fabrication, storage, delivery, erection and bracing of trusses and truss systems, see **ANSI/TPI1 Quality Criteria and DSB-22** available from Truss Plate Institute (www.tpinst.org) and **BCSI Building Component Safety Information** available from the Structural Building Component Association (www.sbcacomponents.com)

ENGINEERING BY TRENCO A MiTek Affiliate
818 Soundside Road
Edenton, NC 27932

Job	Truss	Truss Type	Qty	Ply	JSJ, Magnolia Prime
4619354	V01	Valley	1	1	Job Reference (optional) I70941795

Builders FirstSource (Sumter, SC), Sumter, SC - 29153,

Run: 8.63 S Sep 26 2024 Print: 8.630 S Sep 26 2024 MiTek Industries, Inc. Wed Jan 22 12:49:15 Page: 1
ID:kraZGakJrOCCnJUCEvWDDbzl_51-RfC?PsB70Hq3NSgPqnL8w3uITXbGKWrCDoi7J4zJC?f

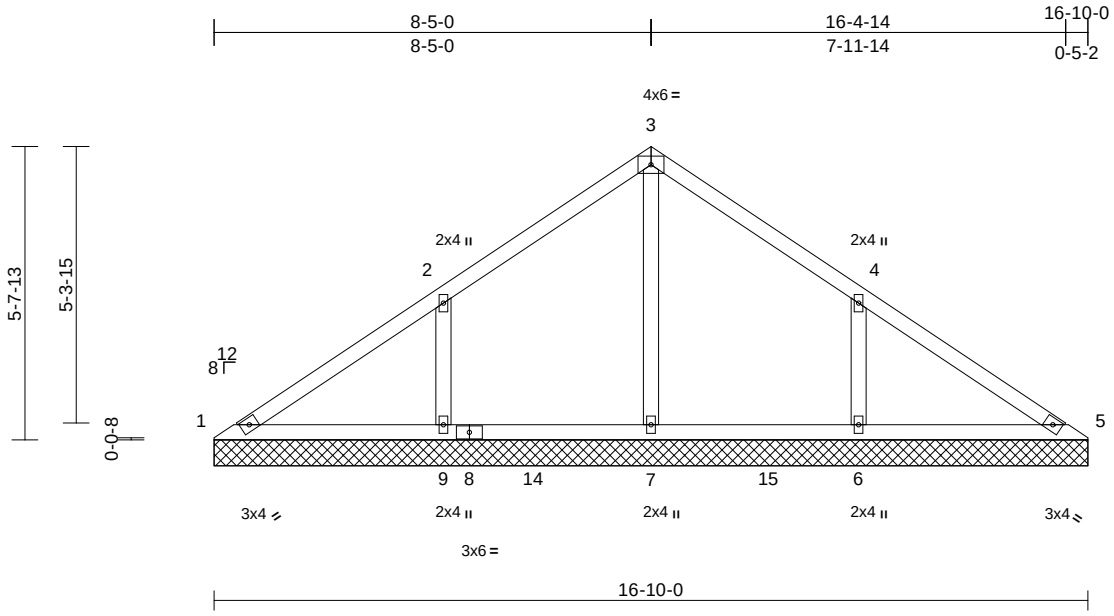

Scale = 1:44.4

Loading	(psf)	Spacing	2-0-0	CSI		DEFL	in	(loc)	l/defl	L/d	PLATES	GRIP
TCLL (roof)	20.0	Plate Grip DOL	1.15	TC	0.26	Vert(LL)	n/a	-	n/a	999	MT20	244/190
TCDL	10.0	Lumber DOL	1.15	BC	0.16	Vert(TL)	n/a	-	n/a	999		
BCLL	0.0*	Rep Stress Incr	YES	WB	0.17	Horiz(TL)	0.00	5	n/a	n/a		
BCDL	10.0	Code	IRC2015/TPI2014	Matrix-MS							Weight: 68 lb	FT = 20%

LUMBER

TOP CHORD 2x4 SP No.2
BOT CHORD 2x4 SP No.2
OTHERS 2x4 SP No.3

BRACING

TOP CHORD Structural wood sheathing directly applied or 10-0-0 oc purlins.
BOT CHORD Rigid ceiling directly applied or 6-0-0 oc bracing.

REACTIONS (size) 1=16-10-0, 5=16-10-0, 6=16-10-0, 7=16-10-0, 9=16-10-0
Max Horiz 1=183 (LC 9)
Max Uplift 1=-20 (LC 13), 6=-250 (LC 13), 9=-253 (LC 12)
Max Grav 1=112 (LC 20), 5=103 (LC 24), 6=460 (LC 20), 7=465 (LC 19), 9=463 (LC 19)

FORCES (lb) - Maximum Compression/Maximum Tension
TOP CHORD 1-2=-151/238, 2-3=-30/178, 3-4=-24/158, 4-5=-120/182
BOT CHORD 1-9=-178/156, 7-9=-178/149, 6-7=-178/149, 5-6=-178/149
WEBS 3-7=-308/42, 2-9=-359/279, 4-6=-359/278

NOTES

1) Unbalanced roof live loads have been considered for this design.
2) Wind: ASCE 7-10; Vult=130mph (3-second gust) Vasd=103mph; TCDL=6.0psf; BCDL=6.0psf; h=25ft; Cat. II; Exp C; Enclosed; MWFRS (envelope) exterior zone and C-C Exterior (2) zone; cantilever left and right exposed ; end vertical left and right exposed;C-C for members and forces & MWFRS for reactions shown; Lumber DOL=1.60 plate grip DOL=1.60
3) Truss designed for wind loads in the plane of the truss only. For studs exposed to wind (normal to the face), see Standard Industry Gable End Details as applicable, or consult qualified building designer as per ANSI/TPI 1.
4) Gable requires continuous bottom chord bearing.
5) Gable studs spaced at 4-0-0 oc.
6) This truss has been designed for a 10.0 psf bottom chord live load nonconcurrent with any other live loads.
7) * This truss has been designed for a live load of 20.0psf on the bottom chord in all areas where a rectangle 3-06-00 tall by 2-00-00 wide will fit between the bottom chord and any other members, with BCDL = 10.0psf.
8) All bearings are assumed to be SP No.2 crushing capacity of 565 psi.
9) Provide mechanical connection (by others) of truss to bearing plate capable of withstanding 20 lb uplift at joint 1, 253 lb uplift at joint 9 and 250 lb uplift at joint 6.

LOAD CASE(S) Standard

January 24,2025

WARNING - Verify design parameters and READ NOTES ON THIS AND INCLUDED MITEK REFERENCE PAGE MII-7473 rev. 1/2/2023 BEFORE USE.
Design valid for use only with MiTek® connectors. This design is based only upon parameters shown, and is for an individual building component, not a truss system. Before use, the building designer must verify the applicability of design parameters and properly incorporate this design into the overall building design. Bracing indicated is to prevent buckling of individual truss web and/or chord members only. Additional temporary and permanent bracing is always required for stability and to prevent collapse with possible personal injury and property damage. For general guidance regarding the fabrication, storage, delivery, erection and bracing of trusses and truss systems, see **ANSI/TPI1 Quality Criteria and DSB-22** available from Truss Plate Institute (www.tpinst.org) and **BCSI Building Component Safety Information** available from the Structural Building Component Association (www.sbcacomponents.com)

ENGINEERING BY TRENCO A MiTek Affiliate
818 Soundside Road
Edenton, NC 27932

Job	Truss	Truss Type	Qty	Ply	JSJ, Magnolia Prime
4619354	V02	Valley	1	1	Job Reference (optional) I70941796

Builders FirstSource (Sumter, SC), Sumter, SC - 29153, Run: 8.63 S Sep 26 2024 Print: 8.630 S Sep 26 2024 MiTek Industries, Inc. Wed Jan 22 12:49:16 Page: 1
ID:zr8OjT2djNUWvJTClN_KG4zl_4d-RfC?PsB70Hq3NSgPqnL8w3uITXbGKWrCDoi7J4zJC?f

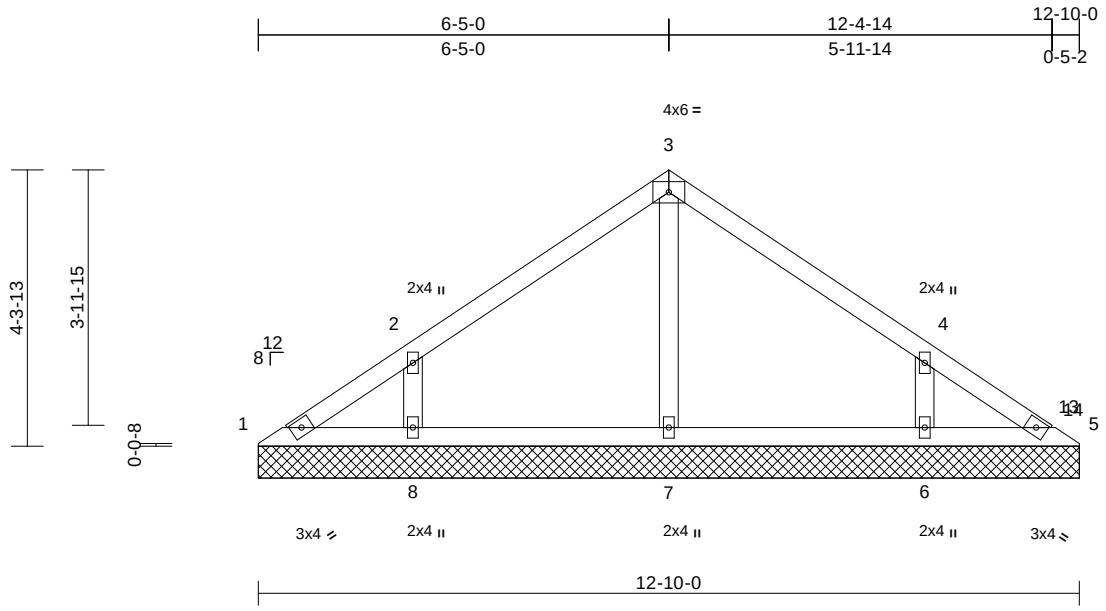

Scale = 1:36

Loading	(psf)	Spacing	2-0-0	CSI		DEFL	in	(loc)	l/defl	L/d	PLATES	GRIP
TCLL (roof)	20.0	Plate Grip DOL	1.15	TC	0.19	Vert(LL)	n/a	-	n/a	999	MT20	244/190
TCDL	10.0	Lumber DOL	1.15	BC	0.12	Vert(TL)	n/a	-	n/a	999		
BCLL	0.0*	Rep Stress Incr	YES	WB	0.07	Horiz(TL)	0.00	5	n/a	n/a		
BCDL	10.0	Code	IRC2015/TPI2014	Matrix-MS							Weight: 49 lb	FT = 20%

LUMBER
TOP CHORD 2x4 SP No.2
BOT CHORD 2x4 SP No.2
OTHERS 2x4 SP No.3

BRACING
TOP CHORD Structural wood sheathing directly applied or 6-0-0 oc purlins.
BOT CHORD Rigid ceiling directly applied or 10-0-0 oc bracing.

REACTIONS (size) 1=12-10-0, 5=12-10-0, 6=12-10-0, 7=12-10-0, 8=12-10-0
Max Horiz 1=137 (LC 9)
Max Uplift 1=-29 (LC 8), 5=-3 (LC 9), 6=-192 (LC 13), 8=-198 (LC 12)
Max Grav 1=95 (LC 20), 5=57 (LC 19), 6=343 (LC 20), 7=273 (LC 1), 8=349 (LC 19)

FORCES (lb) - Maximum Compression/Maximum Tension
TOP CHORD 1-2=-130/117, 2-3=-124/128, 3-4=-124/119, 4-5=-82/65
BOT CHORD 1-8=-45/98, 7-8=-39/69, 6-7=-39/69, 5-6=-39/69
WEBS 3-7=-189/36, 2-8=-310/247, 4-6=-309/245

NOTES
1) Unbalanced roof live loads have been considered for this design.
2) Wind: ASCE 7-10; Vult=130mph (3-second gust) Vasd=103mph; TCDL=6.0psf; BCDL=6.0psf; h=25ft; Cat. II; Exp C; Enclosed; MWFRS (envelope) exterior zone and C-C Exterior (2) zone; cantilever left and right exposed ; end vertical left and right exposed;C-C for members and forces & MWFRS for reactions shown; Lumber DOL=1.60 plate grip DOL=1.60
3) Truss designed for wind loads in the plane of the truss only. For studs exposed to wind (normal to the face), see Standard Industry Gable End Details as applicable, or consult qualified building designer as per ANSI/TPI 1.
4) Gable requires continuous bottom chord bearing.
5) Gable studs spaced at 4-0-0 oc.
6) This truss has been designed for a 10.0 psf bottom chord live load nonconcurrent with any other live loads.
7) * This truss has been designed for a live load of 20.0psf on the bottom chord in all areas where a rectangle 3-06-00 tall by 2-00-00 wide will fit between the bottom chord and any other members.
8) All bearings are assumed to be SP No.2 crushing capacity of 565 psi.
9) Provide mechanical connection (by others) of truss to bearing plate capable of withstanding 29 lb uplift at joint 1, 3 lb uplift at joint 5, 198 lb uplift at joint 8 and 192 lb uplift at joint 6.

LOAD CASE(S) Standard

January 24,2025

WARNING - Verify design parameters and READ NOTES ON THIS AND INCLUDED MITEK REFERENCE PAGE MII-7473 rev. 1/2/2023 BEFORE USE.
Design valid for use only with MiTek® connectors. This design is based only upon parameters shown, and is for an individual building component, not a truss system. Before use, the building designer must verify the applicability of design parameters and properly incorporate this design into the overall building design. Bracing indicated is to prevent buckling of individual truss web and/or chord members only. Additional temporary and permanent bracing is always required for stability and to prevent collapse with possible personal injury and property damage. For general guidance regarding the fabrication, storage, delivery, erection and bracing of trusses and truss systems, see **ANSI/TPI1 Quality Criteria and DSB-22** available from Truss Plate Institute (www.tpinst.org) and **BCSI Building Component Safety Information** available from the Structural Building Component Association (www.sbcacomponents.com)

ENGINEERING BY TRENCO A MiTek Affiliate
818 Soundside Road
Edenton, NC 27932

Job	Truss	Truss Type	Qty	Ply	JSJ, Magnolia Prime
4619354	V03	Valley	1	1	Job Reference (optional) I70941797

Builders FirstSource (Sumter, SC), Sumter, SC - 29153,

Run: 8.63 S Sep 26 2024 Print: 8.630 S Sep 26 2024 MiTek Industries, Inc. Wed Jan 22 12:49:16 Page: 1
ID:d9swEZB9u3?pL9OVSuC8lczl_4R-RfC?PsB70Hq3NSgPqnL8w3uITXbGKWrCDoi7J4zJC?f

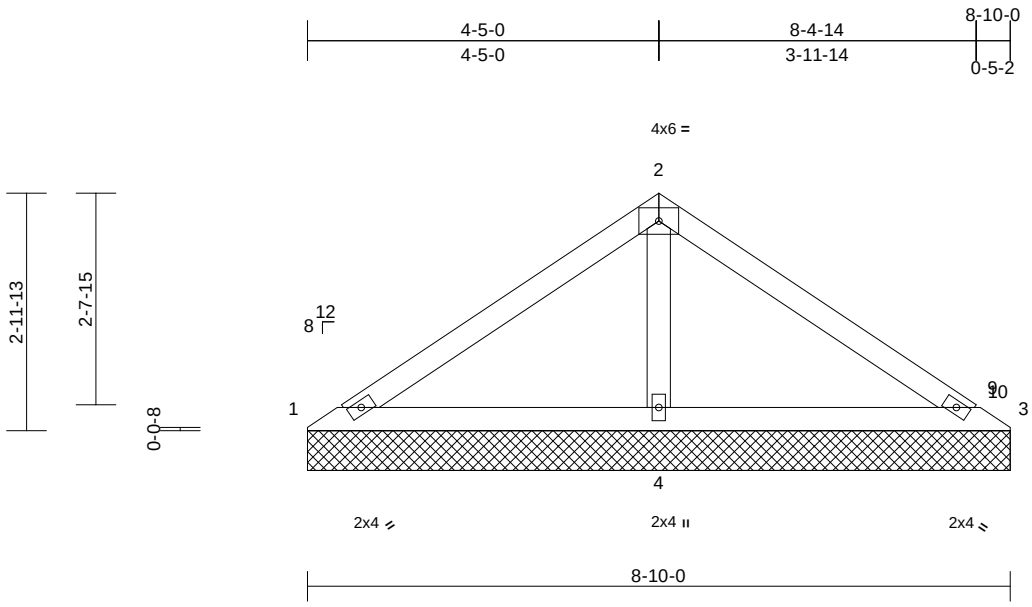

Scale = 1:29

Loading	(psf)	Spacing	2-0-0	CSI		DEFL	in	(loc)	l/defl	L/d	PLATES	GRIP
TCLL (roof)	20.0	Plate Grip DOL	1.15	TC	0.22	Vert(LL)	n/a	-	n/a	999	MT20	244/190
TCDL	10.0	Lumber DOL	1.15	BC	0.21	Vert(TL)	n/a	-	n/a	999		
BCLL	0.0*	Rep Stress Incr	YES	WB	0.10	Horiz(TL)	0.00	3	n/a	n/a		
BCDL	10.0	Code	IRC2015/TPI2014	Matrix-MS							Weight: 31 lb	FT = 20%

LUMBER

TOP CHORD 2x4 SP No.2
BOT CHORD 2x4 SP No.2
OTHERS 2x4 SP No.3

BRACING

TOP CHORD Structural wood sheathing directly applied or 8-10-0 oc purlins.
BOT CHORD Rigid ceiling directly applied or 6-0-0 oc bracing.

REACTIONS (size) 1=8-10-0, 3=8-10-0, 4=8-10-0
Max Horiz 1=93 (LC 9)
Max Uplift 1=-8 (LC 24), 3=-17 (LC 23), 4=-174 (LC 12)
Max Grav 1=79 (LC 23), 3=56 (LC 24), 4=610 (LC 1)

FORCES (lb) - Maximum Compression/Maximum Tension
TOP CHORD 1-2=-105/263, 2-3=-104/261
BOT CHORD 1-4=-243/152, 3-4=-243/152
WEBS 2-4=-494/256

NOTES

1) Unbalanced roof live loads have been considered for this design.
2) Wind: ASCE 7-10; Vult=130mph (3-second gust) Vasd=103mph; TCDL=6.0psf; BCDL=6.0psf; h=25ft; Cat. II; Exp C; Enclosed; MWFRS (envelope) exterior zone and C-C Exterior (2) zone; cantilever left and right exposed ; end vertical left and right exposed;C-C for members and forces & MWFRS for reactions shown; Lumber DOL=1.60 plate grip DOL=1.60
3) Truss designed for wind loads in the plane of the truss only. For studs exposed to wind (normal to the face), see Standard Industry Gable End Details as applicable, or consult qualified building designer as per ANSI/TPI 1.
4) Gable requires continuous bottom chord bearing.
5) Gable studs spaced at 4-0-0 oc.
6) This truss has been designed for a 10.0 psf bottom chord live load nonconcurrent with any other live loads.
7) * This truss has been designed for a live load of 20.0psf on the bottom chord in all areas where a rectangle 3-06-00 tall by 2-00-00 wide will fit between the bottom chord and any other members.
8) All bearings are assumed to be SP No.2 crushing capacity of 565 psi.
9) Provide mechanical connection (by others) of truss to bearing plate capable of withstanding 8 lb uplift at joint 1, 17 lb uplift at joint 3 and 174 lb uplift at joint 4.

LOAD CASE(S) Standard

January 24,2025

WARNING - Verify design parameters and READ NOTES ON THIS AND INCLUDED MITEK REFERENCE PAGE MII-7473 rev. 1/2/2023 BEFORE USE.
Design valid for use only with MiTek® connectors. This design is based only upon parameters shown, and is for an individual building component, not a truss system. Before use, the building designer must verify the applicability of design parameters and properly incorporate this design into the overall building design. Bracing indicated is to prevent buckling of individual truss web and/or chord members only. Additional temporary and permanent bracing is always required for stability and to prevent collapse with possible personal injury and property damage. For general guidance regarding the fabrication, storage, delivery, erection and bracing of trusses and truss systems, see **ANSI/TPI1 Quality Criteria and DSB-22** available from Truss Plate Institute (www.tpinst.org) and **BCSI Building Component Safety Information** available from the Structural Building Component Association (www.sbcacomponents.com)

ENGINEERING BY TRENCO A MiTek Affiliate
818 Soundside Road
Edenton, NC 27932

Job	Truss	Truss Type	Qty	Ply	JSJ, Magnolia Prime
4619354	V04	Valley	1	1	Job Reference (optional) I70941798

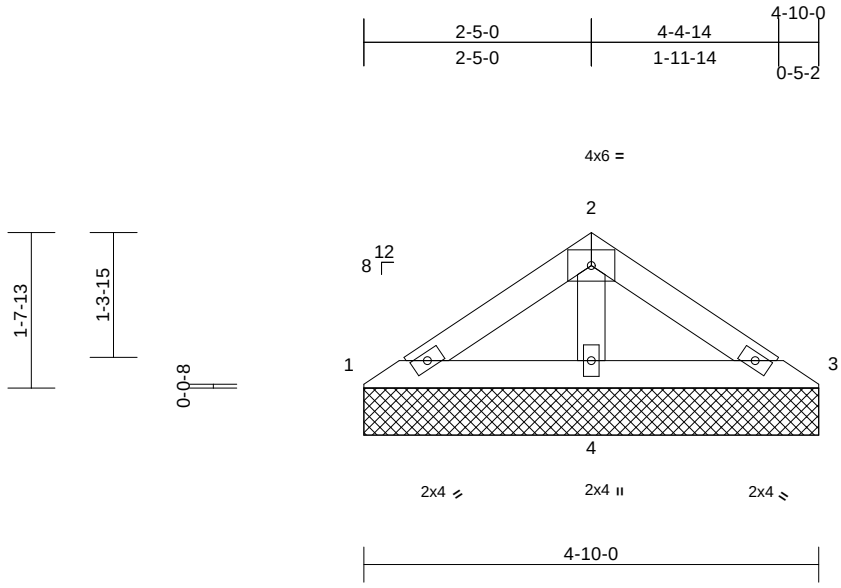

Scale = 1:24.5

Loading	(psf)	Spacing	2-0-0	CSI		DEFL	in	(loc)	l/defl	L/d	PLATES	GRIP
TCLL (roof)	20.0	Plate Grip DOL	1.15	TC	0.06	Vert(LL)	n/a	-	n/a	999	MT20	244/190
TCDL	10.0	Lumber DOL	1.15	BC	0.07	Vert(TL)	n/a	-	n/a	999		
BCLL	0.0*	Rep Stress Incr	YES	WB	0.03	Horiz(TL)	0.00	3	n/a	n/a		
BCDL	10.0	Code	IRC2015/TPI2014	Matrix-MP							Weight: 16 lb	FT = 20%

LUMBER
TOP CHORD 2x4 SP No.2
BOT CHORD 2x4 SP No.2
OTHERS 2x4 SP No.3

BRACING
TOP CHORD Structural wood sheathing directly applied or 4-10-0 oc purlins.
BOT CHORD Rigid ceiling directly applied or 6-0-0 oc bracing.

REACTIONS (size) 1=4-10-0, 3=4-10-0, 4=4-10-0
Max Horiz 1=-49 (LC 8)
Max Uplift 1=-14 (LC 12), 3=-22 (LC 13), 4=-71 (LC 12)
Max Grav 1=63 (LC 23), 3=63 (LC 24), 4=283 (LC 1)

FORCES (lb) - Maximum Compression/Maximum Tension
TOP CHORD 1-2=-60/96, 2-3=-60/90
BOT CHORD 1-4=-99/73, 3-4=-99/73
WEBS 2-4=-174/85

NOTES
1) Unbalanced roof live loads have been considered for this design.
2) Wind: ASCE 7-10; Vult=130mph (3-second gust) Vasd=103mph; TCDL=6.0psf; BCDL=6.0psf; h=25ft; Cat. II; Exp C; Enclosed; MWFRS (envelope) exterior zone and C-C Exterior (2) zone; cantilever left and right exposed ; end vertical left and right exposed;C-C for members and forces & MWFRS for reactions shown; Lumber DOL=1.60 plate grip DOL=1.60
3) Truss designed for wind loads in the plane of the truss only. For studs exposed to wind (normal to the face), see Standard Industry Gable End Details as applicable, or consult qualified building designer as per ANSI/TPI 1.
4) Gable requires continuous bottom chord bearing.
5) Gable studs spaced at 4-0-0 oc.
6) This truss has been designed for a 10.0 psf bottom chord live load nonconcurrent with any other live loads.
7) * This truss has been designed for a live load of 20.0psf on the bottom chord in all areas where a rectangle 3-06-00 tall by 2-00-00 wide will fit between the bottom chord and any other members.
8) All bearings are assumed to be SP No.2 crushing capacity of 565 psi.
9) Provide mechanical connection (by others) of truss to bearing plate capable of withstanding 14 lb uplift at joint 1, 22 lb uplift at joint 3 and 71 lb uplift at joint 4.

LOAD CASE(S) Standard

January 24,2025

WARNING - Verify design parameters and READ NOTES ON THIS AND INCLUDED MITEK REFERENCE PAGE MII-7473 rev. 1/2/2023 BEFORE USE.
Design valid for use only with MiTek® connectors. This design is based only upon parameters shown, and is for an individual building component, not a truss system. Before use, the building designer must verify the applicability of design parameters and properly incorporate this design into the overall building design. Bracing indicated is to prevent buckling of individual truss web and/or chord members only. Additional temporary and permanent bracing is always required for stability and to prevent collapse with possible personal injury and property damage. For general guidance regarding the fabrication, storage, delivery, erection and bracing of trusses and truss systems, see **ANSI/TPI1 Quality Criteria and DSB-22** available from Truss Plate Institute (www.tpinst.org) and **BCSI Building Component Safety Information** available from the Structural Building Component Association (www.sbcacomponents.com)

ENGINEERING BY TRENCO A MiTek Affiliate
818 Soundside Road
Edenton, NC 27932

Symbols

PLATE LOCATION AND ORIENTATION

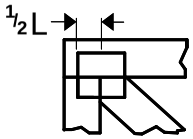

Center plate on joint unless x, y offsets are indicated. Dimensions are in ft-in-sixteenths. Apply plates to both sides of truss and fully embed teeth.

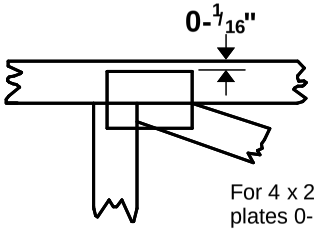

For 4 x 2 orientation, locate plates 0- 1/16" from outside edge of truss.

This symbol indicates the required direction of slots in connector plates.

* Plate location details available in MiTek software or upon request.

PLATE SIZE

4 x 4

The first dimension is the plate width measured perpendicular to slots. Second dimension is the length parallel to slots.

LATERAL BRACING LOCATION

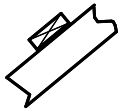

Indicated by symbol shown and/or by text in the bracing section of the output. Use T or I bracing if indicated.

BEARING

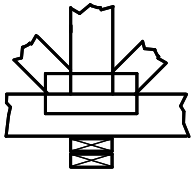

Indicates location where bearings (supports) occur. Icons vary but reaction section indicates joint number/letter where bearings occur. Min size shown is for crushing only.

Industry Standards:

ANSI/TPI1: National Design Specification for Metal Plate Connected Wood Truss Construction.
DSB-22: Design Standard for Bracing.
BCSI: Building Component Safety Information, Guide to Good Practice for Handling, Installing, Restraining & Bracing of Metal Plate Connected Wood Trusses.

Numbering System

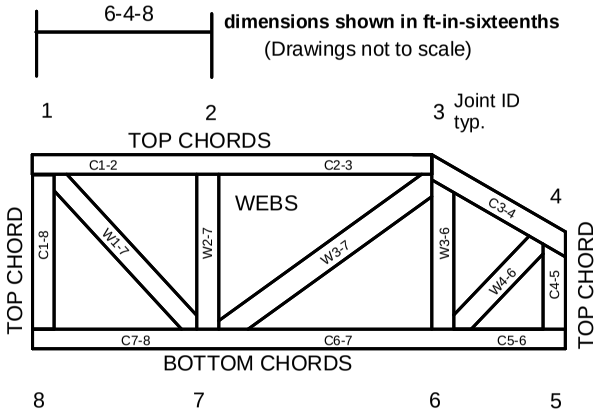

JOINTS ARE GENERALLY NUMBERED/LETTERED CLOCKWISE AROUND THE TRUSS STARTING AT THE JOINT FARTHEST TO THE LEFT.

CHORDS AND WEBS ARE IDENTIFIED BY END JOINT NUMBERS/LETTERS.

Product Code Approvals

ICC-ES Reports:

ESR-1988, ESR-2362, ESR-2685, ESR-3282
ESR-4722, ESL-1388

Design General Notes

Trusses are designed for wind loads in the plane of the truss unless otherwise shown.

Lumber design values are in accordance with ANSI/TPI 1 section 6.3 These truss designs rely on lumber values established by others.

© 2023 MiTek® All Rights Reserved

MiTek®

ENGINEERING BY TRENCO
A MiTek Affiliate

General Safety Notes

Failure to Follow Could Cause Property Damage or Personal Injury

1. Additional stability bracing for truss system, e.g. diagonal or X-bracing, is always required. See BCSI.
2. Truss bracing must be designed by an engineer. For wide truss spacing, individual lateral braces themselves may require bracing, or alternative Tor I bracing should be considered.
3. Never exceed the design loading shown and never stack materials on inadequately braced trusses.
4. Provide copies of this truss design to the building designer, erection supervisor, property owner and all other interested parties.
5. Cut members to bear tightly against each other.
6. Place plates on each face of truss at each joint and embed fully. Knots and wane at joint locations are regulated by ANSI/TPI 1.
7. Design assumes trusses will be suitably protected from the environment in accord with ANSI/TPI 1.
8. Unless otherwise noted, moisture content of lumber shall not exceed 19% at time of fabrication.
9. Unless expressly noted, this design is not applicable for use with fire retardant, preservative treated, or green lumber.
10. Camber is a non-structural consideration and is the responsibility of truss fabricator. General practice is to camber for dead load deflection.
11. Plate type, size, orientation and location dimensions indicated are minimum plating requirements.
12. Lumber used shall be of the species and size, and in all respects, equal to or better than that specified.
13. Top chords must be sheathed or purlins provided at spacing indicated on design.
14. Bottom chords require lateral bracing at 10 ft. spacing, or less, if no ceiling is installed, unless otherwise noted.
15. Connections not shown are the responsibility of others.
16. Do not cut or alter truss member or plate without prior approval of an engineer.
17. Install and load vertically unless indicated otherwise.
18. Use of green or treated lumber may pose unacceptable environmental, health or performance risks. Consult with project engineer before use.
19. Review all portions of this design (front, back, words and pictures) before use. Reviewing pictures alone is not sufficient.
20. Design assumes manufacture in accordance with ANSI/TPI 1 Quality Criteria.
21. The design does not take into account any dynamic or other loads other than those expressly stated.