FOXCROFT

CEDAR POINTE
LOT 15

PLAN ID: 110719.1001

SMITH DOUGLAS HOMES

QUALITY | INTEGRITY | VALUE

110 VILLAGE TRAIL SUITE 215
WOODSTOCK, GA. 30188

DRAWING INDEX

A0.0	COVER SHEET
A1.1	FRONT ELEVATION
A2.1	SIDE & REAR ELEVATIONS
A3.1	SLAB FOUNDATION
A5.1	FIRST FLOOR PLAN & DETAILS
A6.1	ROOF PLAN
A7.2	ELECTRICAL PLAN

AREA TABULATION	
FIRST FLOOR	1202
TOTAL	1202
GARAGE	381
FRONT PORCH (COVERED)	18
FRONT PORCH	17
REAR PATIO	120

GOVERNMENTAL CODES & STANDARDS

HOME TO BE BUILT TO CONFORM TO ALL APPLICABLE LOCAL CODES, PRACTICES AND STANDARDS

BUILDING CODE ANALYSIS / DESIGN CRITERIA

HOME TO BE BUILT TO MEET OR EXCEED ALL LOCAL CODES AND DESIGN CRITERIA

PLAN REVISIONS

DATE	BY	REVISION	PAGE #
5/2/2018	AW	PCR 2158 Remove optional kitchen island and move sink island toward cooktop wall. Add clg. light and switch to new Nook area.	A3.1-A5.1, A7.2-A8.1
5/2/2018	AW	PCR 2277 Change B-2, B-3 & Owner's closet door from 4068 DH to 2468 single hung. Change Owner's W.I.C. & Obath door from 3068 DH to 3068 single hung	A5.1, A7.2
1/17/2019	AW	PCR #2789 Changed Hall Bath 3068 door to 2868	A5.1
3/27/2019	MM	Added callout for detail 3/D5.1 at front patio	A1.1-A1.9
5/9/2019	MM	Added side entry garage option	A1.1-A5.1, A7.2
10/2/2019	AW	PCR #3271 added dim to PDS from front of garage	A5.1
11/7/2019	AW	PCR #3353 Changed Owner's Bath vanity size from 36" to 33" for toilet plumbing clearance	A3.1, A5.1, A5.4, A7.2
10/1/2023	AW	PCR #5379 changed 2x6 plumbing wall in hall bath to 2x4 and wall between linen & laundry to 2x6	A3.1, A5.1

ALL NON-MASONRY RETURNS TO BE HORIZONTAL SIDING

SEE SHEET D3 OF SDH TYPICAL DETAILS FOR SOFFIT DETAILS PER SOFFIT MATERIAL

CEDAR POINTE
LOT 15

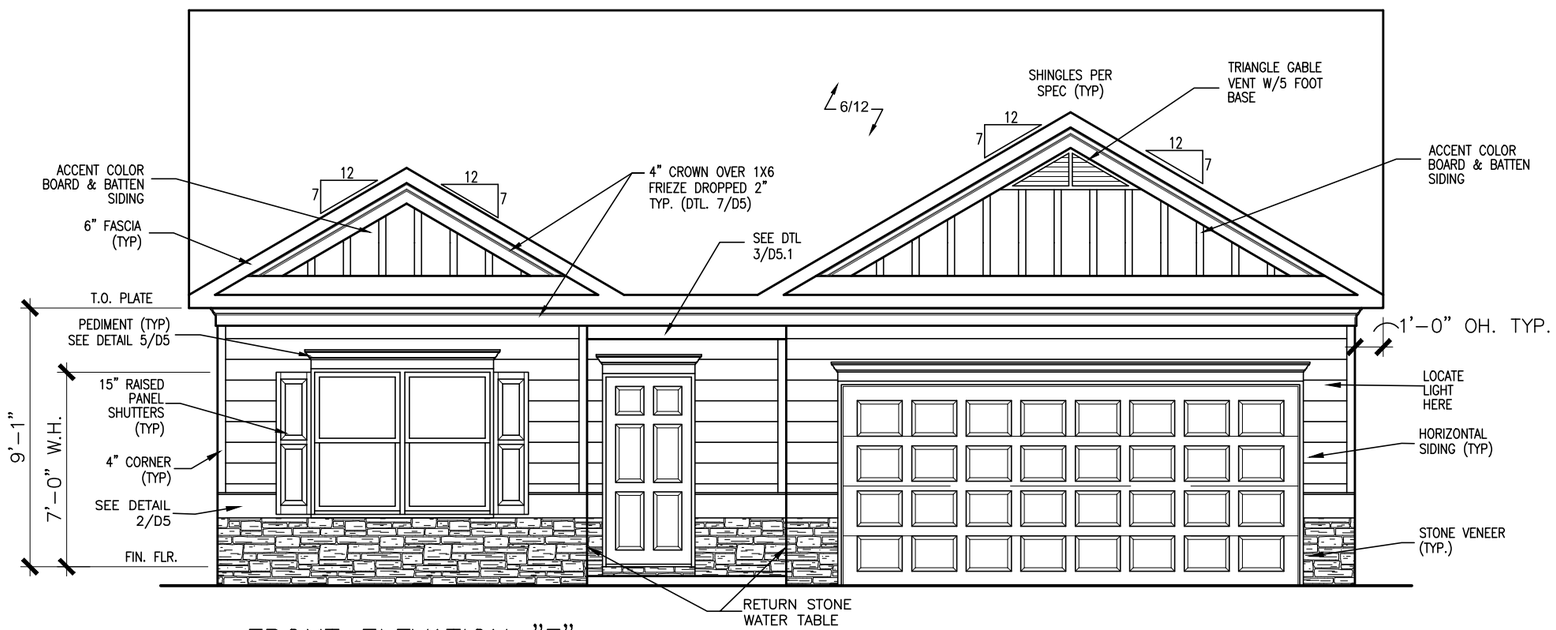

FRONT ELEVATION "F"

SCALE : 3/16" = 1'-0"

DATE	REVISION	BY
#	#	#
#	#	#
#	#	#
#	#	#
#	#	#
#	#	#

SMITH DOUGLAS HOMES
QUALITY | INTEGRITY | VALUE

ELEVATIONS
FRONT ELEVATION
FOXCROFT

SMITH DOUGLAS HOMES
110 VILLAGE TRAIL
SUITE 215
WOODSTOCK, GA 30188
www.smithdouglas.com

SMITH DOUGLAS HOMES expressly reserves it's property rights in these plans and drawings. These plans and related drawings are not to be reproduced without written consent from SMITH DOUGLAS HOMES.

BY: CLJ	CH: AW
DATE: 4-10-25	
FACADE OPT: C	
PLAN ID:	
FND: ALL	ELEV: F
PAGE NO: A1.1	

© SMITH DOUGLAS HOMES 2020

CEDAR POINTE
LOT 15

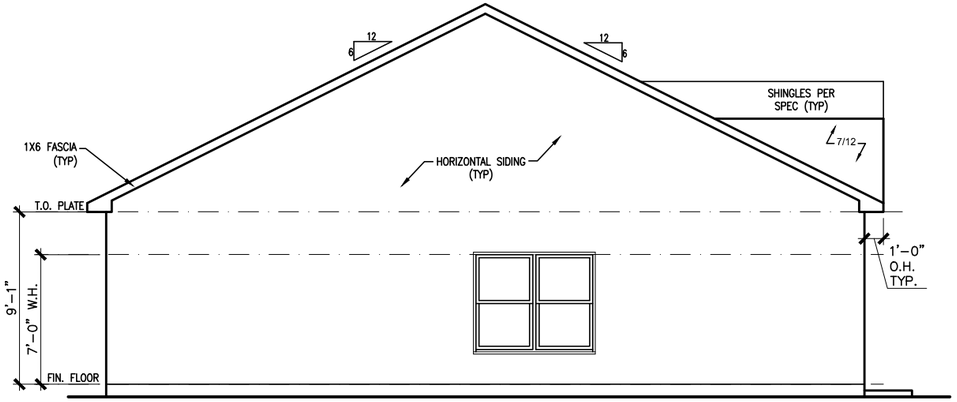

LEFT ELEVATION "F"

SCALE : 1/8" = 1'-0"

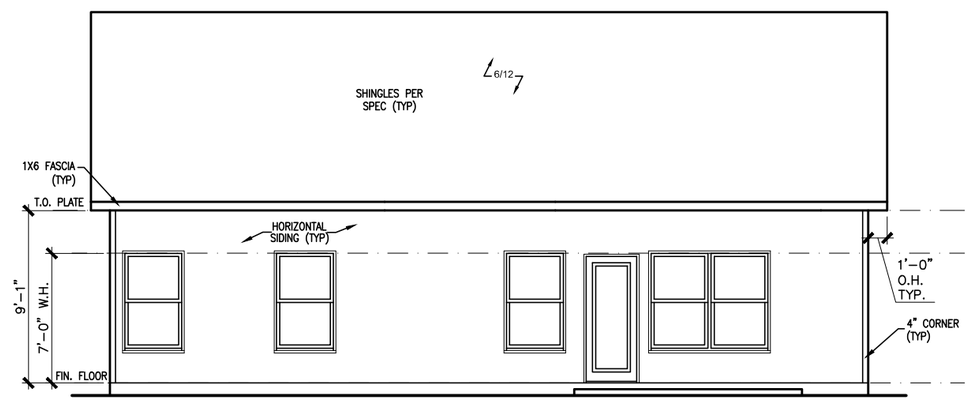

REAR ELEVATION "F"

SCALE : 1/8" = 1'-0"

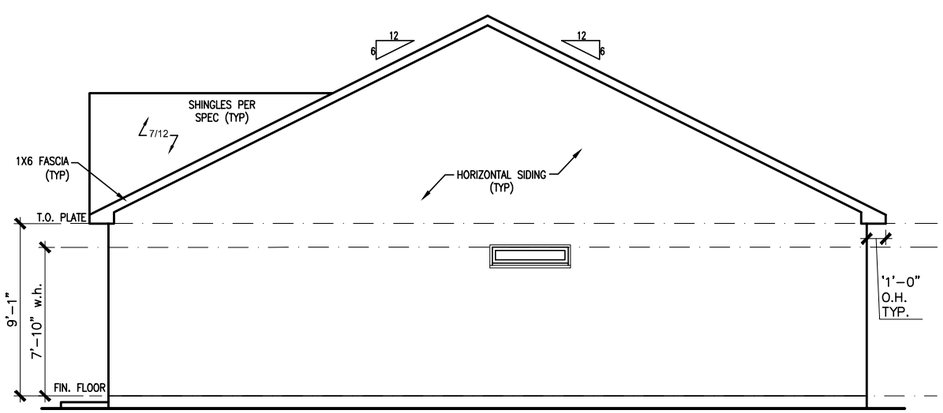

RIGHT ELEVATION "F"

SCALE : 1/8" = 1'-0"

DATE	REVISION	BY

SMITH DOUGLAS HOMES
QUALITY | INTEGRITY | VALUE

ELEVATIONS
SIDES AND REAR
FOXCROFT

SMITH DOUGLAS HOMES
110 VILLAGE TRAIL
SUITE 215
WOODSTOCK, GA 30188
www.smithdouglas.com

SMITH DOUGLAS HOMES expressly reserves it's property rights in these plans and drawings. These plans and related drawings are not to be reproduced without written consent from SMITH DOUGLAS HOMES.

BY:	CH:
CLJ	AW
DATE: 4-10-25	
FACADE OPT: C	
PLAN ID:	
FND: ALL	ELEV: F
PAGE NO: A2.1	

© SMITH DOUGLAS HOMES 2020

CEDAR POINTE
LOT 15

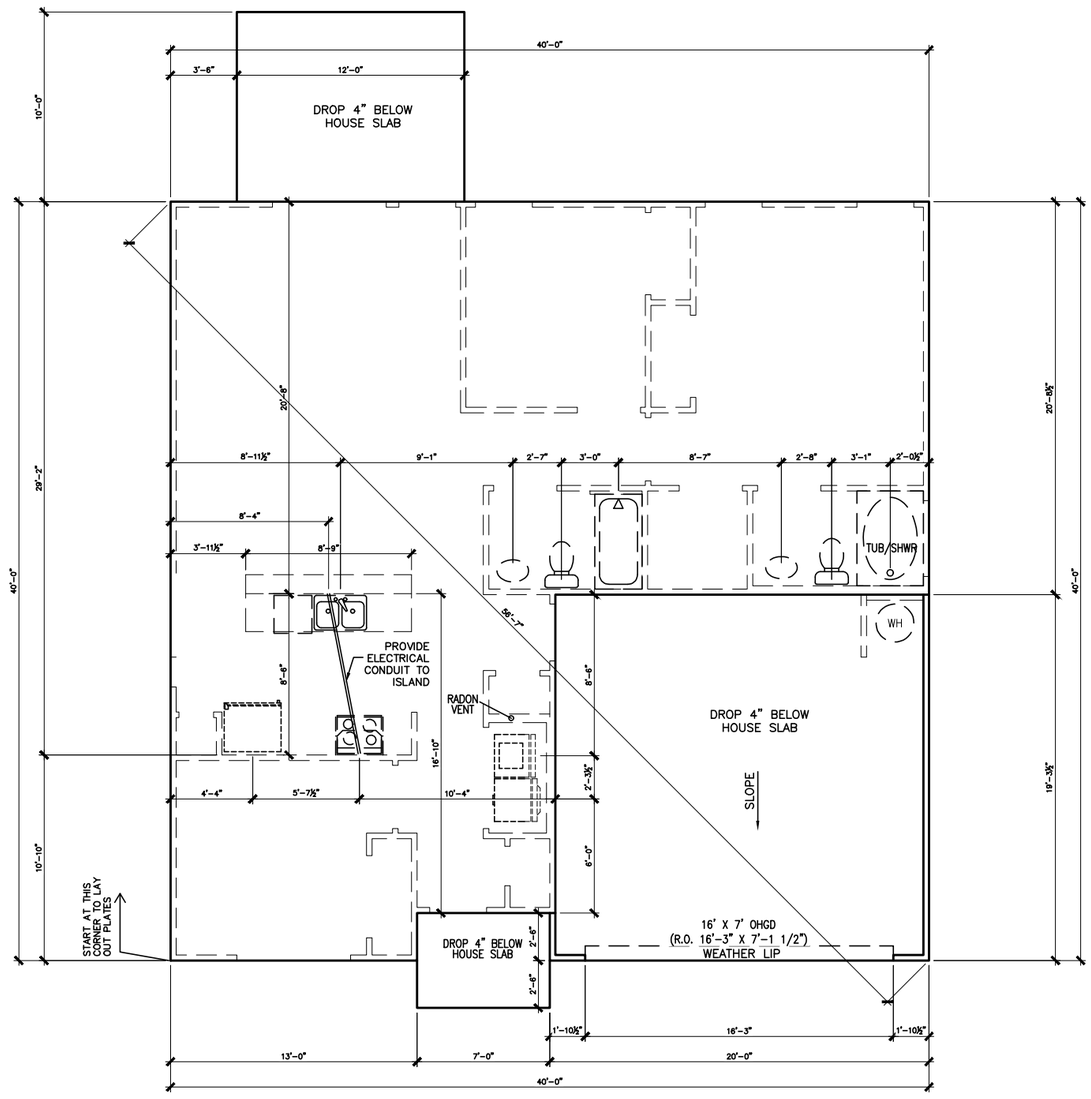

SLAB PLAN

SCALE : 1/8" = 1'-0"

*RADON VENT PROVIDED PER LOCAL CODE

REFER TO DETAIL 3/D1 FOR BRICK LEDGE DETAIL WHEN BRICK VENEER IS CHOOSEN

© SMITH DOUGLAS HOMES 2020

DATE	REVISION	BY
#	#	#
#	#	#
#	#	#
#	#	#
#	#	#
#	#	#

SMITH DOUGLAS HOMES
QUALITY | INTEGRITY | VALUE

FOUNDATION PLAN
SLAB PLAN
FOXCROFT

SMITH DOUGLAS HOMES
110 VILLAGE TRAIL
SUITE 215
WOODSTOCK, GA 30188
www.smithdouglas.com

SMITH DOUGLAS HOMES expressly reserves it's property rights in these plans and drawings. These plans and related drawings are not to be reproduced without written consent from SMITH DOUGLAS HOMES.

BY: CLJ	CH: AW
DATE: 4-10-25	
FACADE OPT: C	
PLAN ID:	
FND: ALL	ELEV: F
PAGE NO: A3.1	

CEDAR POINTE
LOT 15

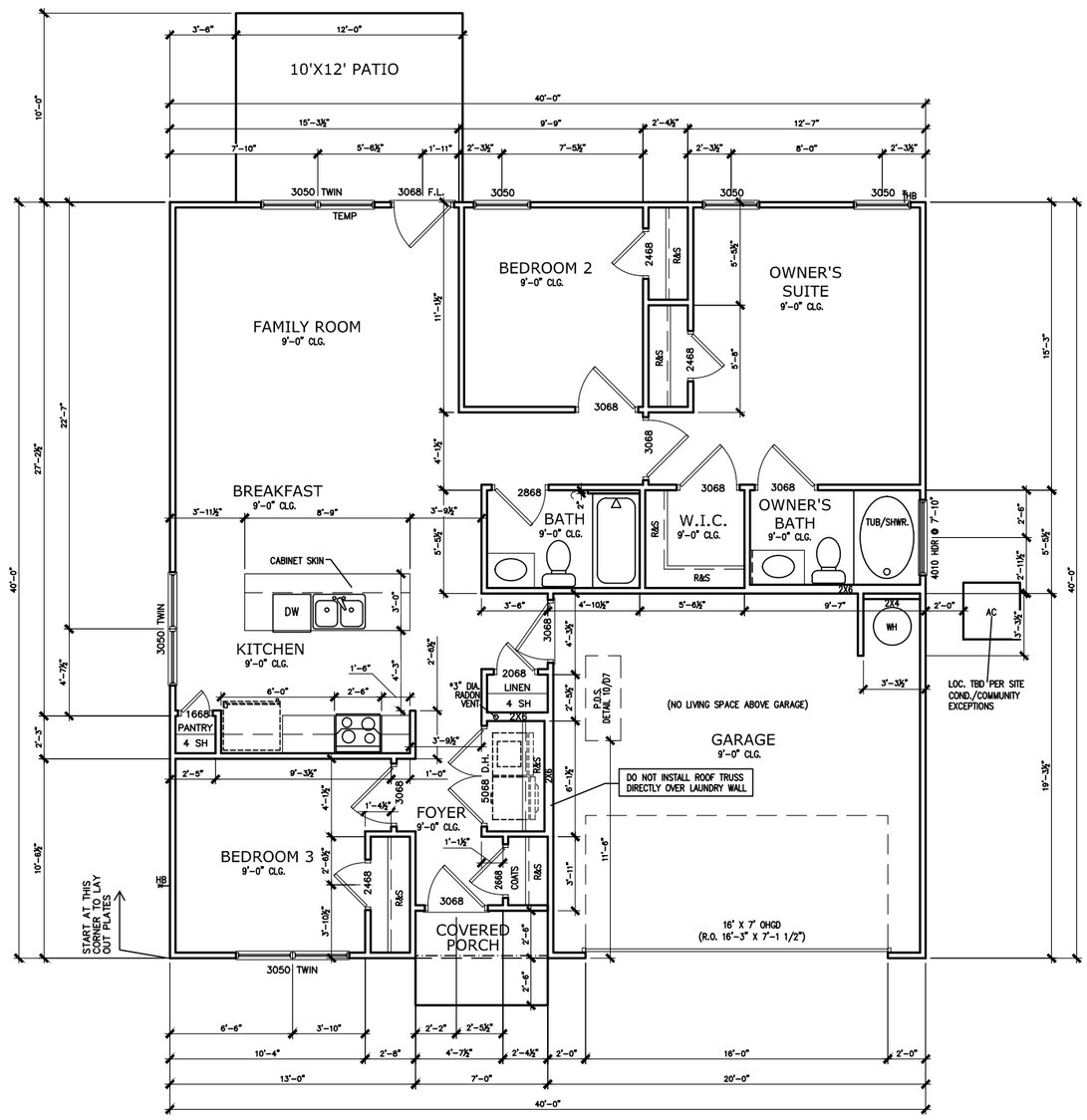

FIRST FLOOR PLAN

SCALE : 1/8" = 1'-0"

*RADON VENT PROVIDED PER LOCAL CODE

REFER TO MANUFACTURER'S SPECS. FOR DRAIN LOCATIONS ON DETAIL SHEETS D12,D12.1,D12.2 & D12.3

© SMITH DOUGLAS HOMES 2020

DATE	REVISION	BY
#	#	#
#	#	#
#	#	#
#	#	#
#	#	#
#	#	#

SMITH DOUGLAS HOMES
QUALITY | INTEGRITY | VALUE

FLOOR PLAN
FIRST FLOOR
FOXCROFT

SMITH DOUGLAS HOMES
110 VILLAGE TRAIL
SUITE 215
WOODSTOCK, GA 30188
www.smithdouglas.com

SMITH DOUGLAS HOMES expressly reserves it's property rights in these plans and drawings. These plans and related drawings are not to be reproduced without written consent from SMITH DOUGLAS HOMES.

BY: CLJ	CH: AW
DATE: 4-10-25	
FACADE OPT: C	
PLAN ID:	
FND: ALL	ELEV: F
PAGE NO: A5.1	

CEDAR POINTE
LOT 15

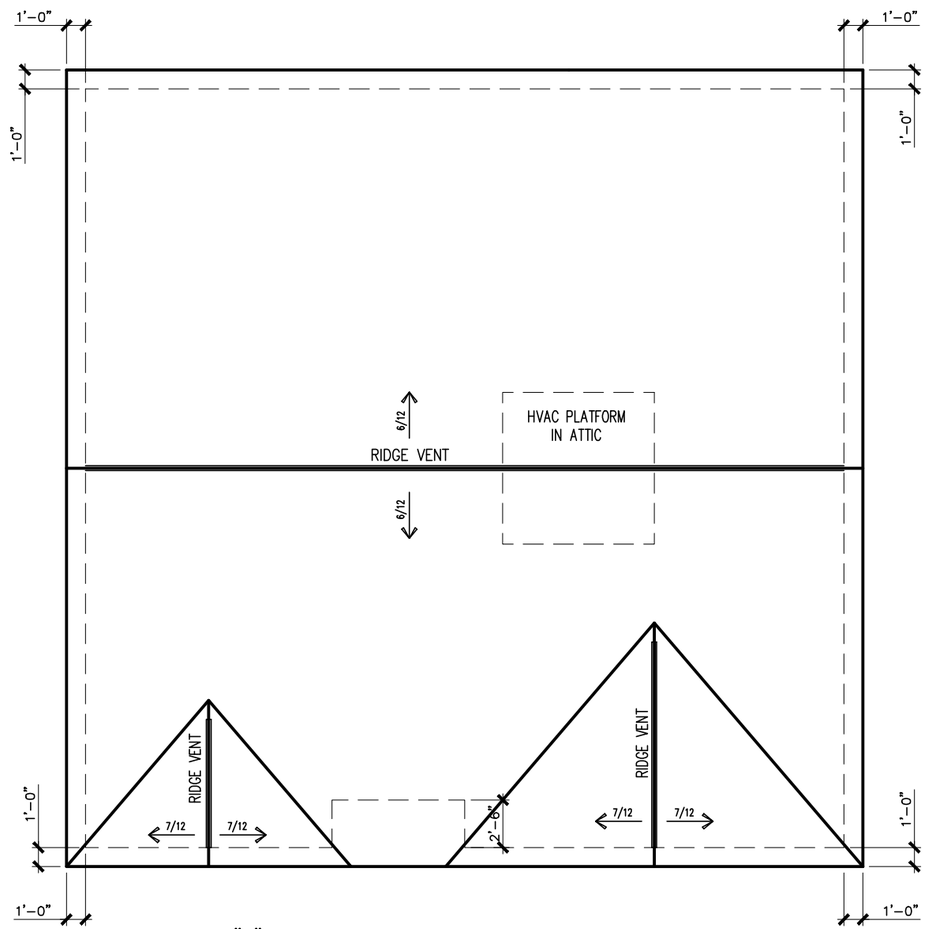

ROOF PLAN "F"

SCALE : 1/8" = 1'-0"

DATE	REVISION	BY
#	#	#
#	#	#
#	#	#
#	#	#
#	#	#
#	#	#

SMITH DOUGLAS HOMES
QUALITY | INTEGRITY | VALUE

ROOF PLAN
ROOF PLAN
FOXCROFT

SMITH DOUGLAS HOMES
110 VILLAGE TRAIL
SUITE 215
WOODSTOCK, GA 30188
www.smithdouglas.com

SMITH DOUGLAS HOMES expressly reserves it's property rights in these plans and drawings. These plans and related drawings are not to be reproduced without written consent from SMITH DOUGLAS HOMES.

BY: CLJ	CH: AW
DATE: 4-10-25	
FACADE OPT: C	
PLAN ID:	
FND: ALL	ELEV: F
PAGE NO: A6.1	

© SMITH DOUGLAS HOMES 2020

CEDAR POINTE
LOT 15

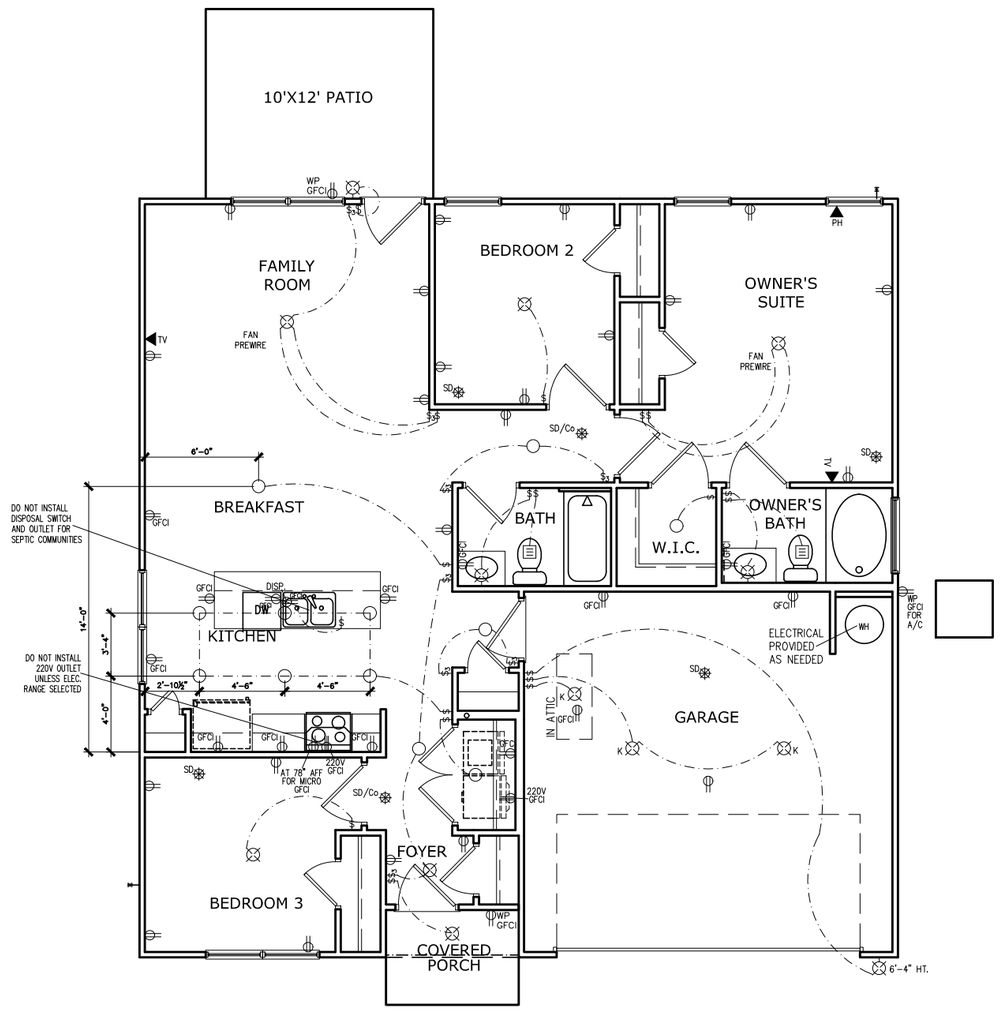

FIRST FLOOR ELECTRICAL PLAN

SCALE : 1/8" = 1'-0"

ELECTRICAL LEGEND

$	SWITCH	TV	TV
$3	3 WAY SWITCH		120V RECEPTACLE
$4	4 WAY SWITCH		120V SWITCHED RECEPTACLE
	CEILING FIXTURE		220V RECEPTACLE
K	KEYLESS	GFCI	GFCI OUTLET
	WALL MOUNT FIXTURE	AFCI	ARCH FAULT CIRCUIT INTERRUPTER
	CEILING FIXTURE	GL	GAS LINE
	FLEX CONDUIT	WL	WATER LINE
CH	CHIMES		HOSE BIBB
PH	TELEPHONE		FLOOD LIGHT
SD/Co	SMOKE DETECTOR & CARBON MONOXIDE		1x4 LUMINOUS FIXTURE
SO	SECURITY OUTLET		CEILING FAN
	GARAGE DOOR OPENER		
	EXHAUST FAN		ELECTRICAL WIRING
	FAN/LIGHT		CEILING FIXTURE

ELECTRICAL PLANS TO FOLLOW ALL LOCAL CODES

APPROX. FIXTURE HGTS (MEASURED FROM BOTTOM OF FIXTURE)	
BREAKFAST/DINING ROOM	63" ABOVE FINISHED FLOOR
KITCHEN PENDANT LIGHTS	33" ABOVE COUNTER TOP
TWO STORY FOYER FIXTURE	96" ABOVE FINISHED FLOOR
CEILING FAN	96" ABOVE FINISHED FLOOR

NOTE: FINAL PLACEMENT OF PHONE/CABLE T.B.D. ON SITE BY THE BUILDER

© SMITH DOUGLAS HOMES 2020

DATE	REVISION	BY

SMITH DOUGLAS HOMES
QUALITY | INTEGRITY | VALUE

ELECTRICAL PLAN
FIRST FLOOR
FOXCROFT

SMITH DOUGLAS HOMES
110 VILLAGE TRAIL
SUITE 215
WOODSTOCK, GA 30188
www.smithdouglas.com

SMITH DOUGLAS HOMES expressly reserves it's property rights in these plans and drawings. These plans and related drawings are not to be reproduced without written consent from SMITH DOUGLAS HOMES.

BY: CLJ	CH: AW
DATE: 4-10-25	
FACADE OPT: C	
PLAN ID:	
FND: ALL	ELEV: F
PAGE NO: A7.2	

REFER TO LOT SPECIFIC PLAN TO DETERMINE WHICH DETAILS APPLY

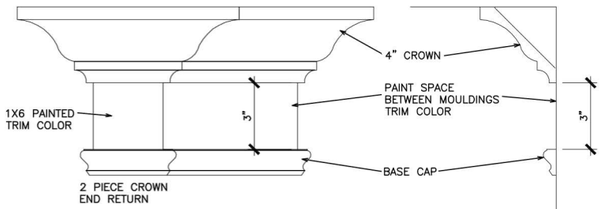

TYPICAL TWO PIECE CROWN

N.T.S

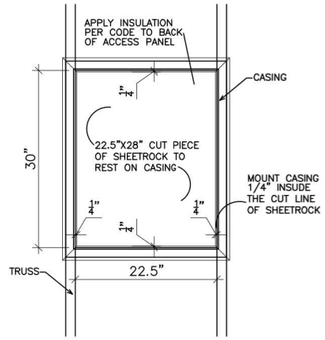

SCUTTLE HOLE DETAIL

N.T.S

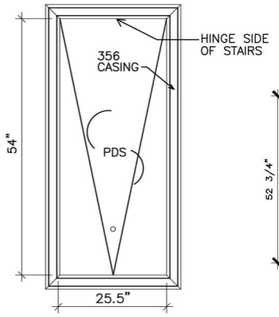

PDS TRIM DETAIL

N.T.S

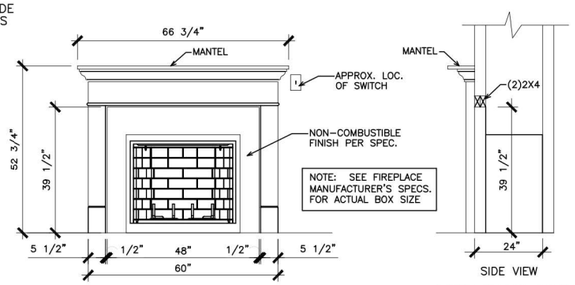

ELECTRIC FRAMING DIMENSIONS: W.=37" D.=24" H.=31 1/4"

GAS FRAMING DIMENSIONS: W.=37" D.=24" H.=34 3/4"

GAS/ELECTRIC FIREPLACE DETAIL WITH WESCOTT WOOD MANTEL

N.T.S

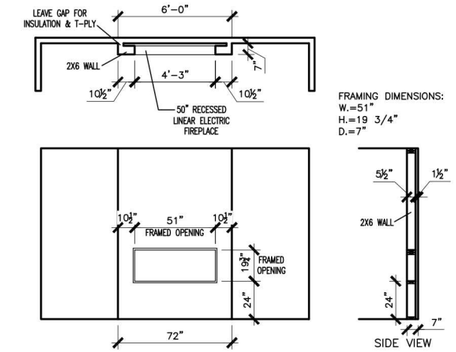

LINEAR ELECTRIC FIREPLACE DETAIL

N.T.S

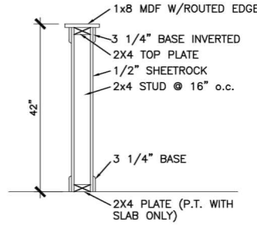

TYP. KNEEWALL SECTION

N.T.S

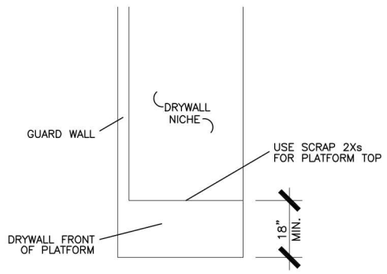

SITE BUILT PLATFORM TO RAISE WATER HEATER

N.T.S

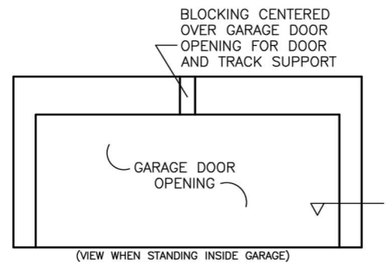

TYP. GARAGE WRAP & BLOCKING

N.T.S

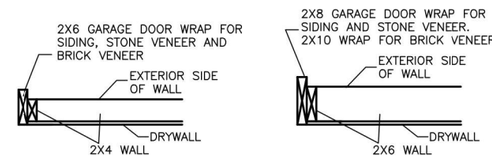

SECTION VIEW
2X4 PORTAL WALL

SECTION VIEWS
2X6 PORTAL WALL

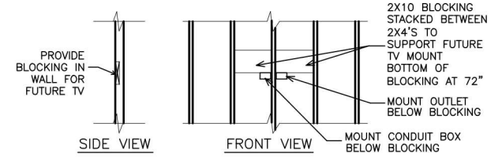

NOTE: USE SCRAPS TO CREATE BLOCKING – (3) 2X4s, (2) 2X6s OR (1) 2X10

TYP. TV WALL PREP

N.T.S

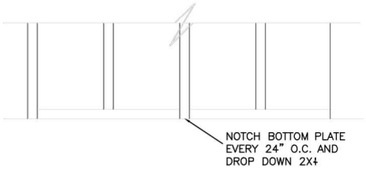

TYP. 2ND FLOOR KNEE WALL STABILITY

N.T.S

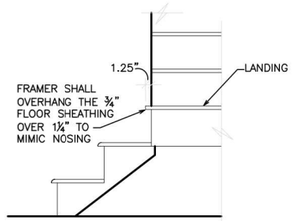

BOX STEP OVERHANG

N.T.S

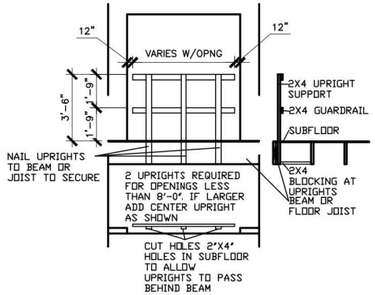

GUARD RAIL DTL. AS REQ'D

N.T.S.

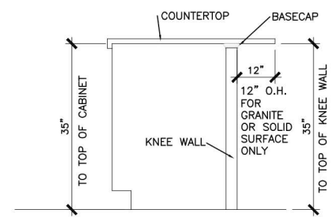

SECTION @ ISLAND KNEEWALL

N.T.S

1. MIRRORS ARE TO BE CENTERED ON THE CABINET OR KNEESPACE BELOW.
2. SPACE BETWEEN MIRROR AND WALL/CABINET END, MAY NOT MATCH ON EACH SIDE
3. MIRRORS ARE LIMITED TO 2 SIZES: 24" & 30"
   a. VANITIES 30" & SMALLER RECEIVE THE 24" WIDE MIRROR.
   b. VANITIES 33" & LARGER RECEIVE THE 30" WIDE MIRROR.
   c. HEIGHTS DO NOT CHANGE.
   d. SEE P.O. FOR EXACT WIDTH.
4. SEE THE BELOW EXAMPLE DRAWINGS. DIMENSIONS ARE APPROXIMATE.

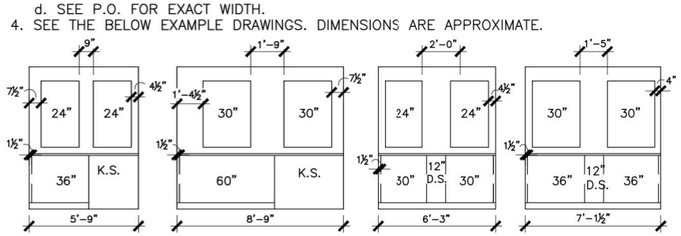

TYPICAL SPLIT MIRROR SCENARIOS

N.T.S

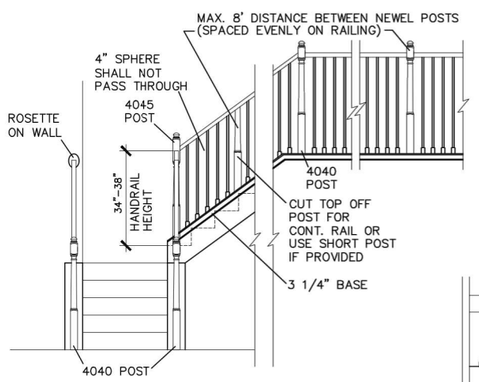

HANDRAIL/POST DETAIL @ STAIRS

N.T.S

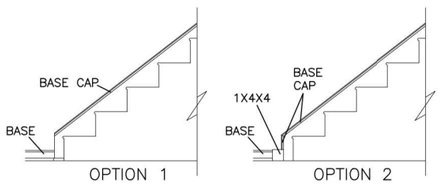

STAIR TRIM DETAILS

N.T.S

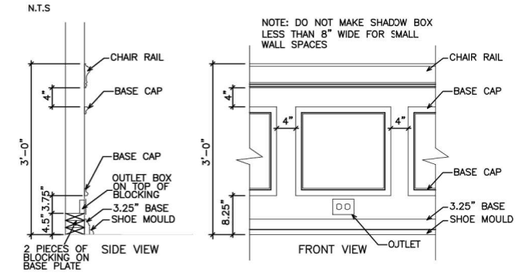

TYPICAL CHAIR RAIL & SHADOW BOX DETAIL

N.T.S

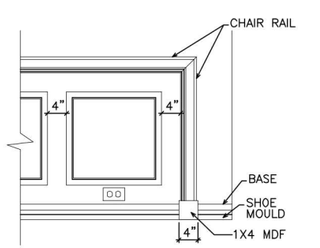

CHAIR RAIL END TRIM DETAIL

N.T.S

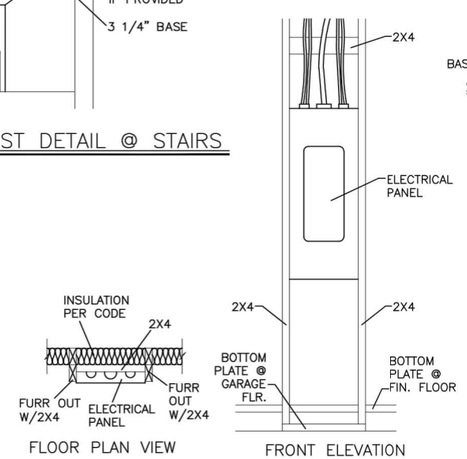

ELECTRICAL PANEL DETAIL

N.T.S

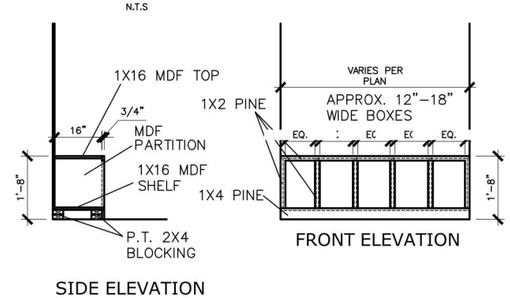

MUD ROOM BENCH SEAT DETAIL

N.T.S

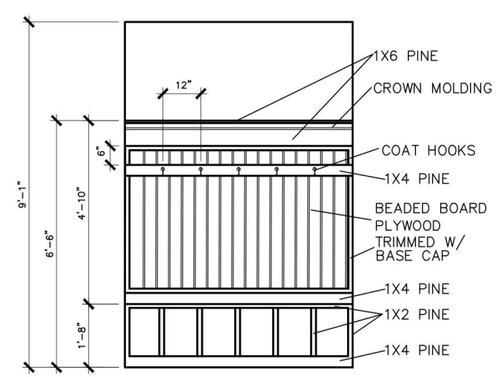

MUD ROOM BENCH SEAT DETAIL WITH BEADED BOARD, HOOKS, & CROWN

N.T.S

(IF TRIM CHOSEN WITHOUT BENCH CONTINUE TO FLOOR)

© SMITH DOUGLAS HOMES 2023

DATE	REVISION	BY

SMITH DOUGLAS HOMES
QUALITY | INTEGRITY | VALUE

INTERIOR TRIM DETAILS

SMITH DOUGLAS HOMES
110 VILLAGE TRAIL
SUITE 215
WOODSTOCK, GA 30188
www.smithdouglas.com

SMITH DOUGLAS HOMES expressly reserves it's property rights in these plans and drawings. These plans and related drawings are not to be reproduced without written consent from SMITH DOUGLAS HOMES.

BY: CH:
DATE: 6/13/23
FACADE OPT:
PLAN ID:
FND: ELEV:
PAGE NO: D1.1

DESIGN SPECIFICATIONS:

Construction Type: Commerical ☐ Residential ☒

Applicable Building Codes:
- 2018 North Carolina Residential Building Code
- ASCE 7-10: Minimum Design Loads for Buildings and Other Structures

Design Loads:
1. Roof
   - 1.1 Live ..... 20 PSF
   - 1.2 Dead ..... 10 PSF
   - 1.3 Snow ..... 15 PSF
     - 1.3.1 Importance Factor 1.0
2. Floor Live Loads
   - 2.1 Typ. Dwelling ..... 40 PSF
   - 2.2 Sleeping Areas ..... 30 PSF
   - 2.3 Balconies (exterior) and Decks ..... 40 PSF
   - 2.4 Garage Parking ..... 50 PSF
3. Floor Dead Loads
   - 3.1 Conventional 2x ..... 10 PSF
   - 3.2 I-Joist ..... 15 PSF
   - 3.3 Floor Truss ..... 15 PSF
4. Ultimate Wind Speed (3 sec. gust) ..... 130 MPH
   - 4.1 Exposure ..... B
   - 4.2 Importance Factor 1.0
   - 4.3 Wind Base Shear
     - 4.3.1 Vx =
     - 4.3.2 Vy =
5. Component and Cladding (in PSF)

MEAN ROOF HT.	UP TO 30'	30'1"-35'	35'1"-40'	40'1"-45'
ZONE 1	16.7,-18.0	17.5,-18.9	18.2,-19.6	18.7,-20.2
ZONE 2	16.7,-21.0	17.5,-22.1	18.2,-22.9	18.7,-23.5
ZONE 3	16.7,-21.0	17.5,-22.1	18.2,-22.9	18.7,-23.5
ZONE 4	18.2,-19.0	19.2,-20.0	19.9,-20.7	20.4,-21.3
ZONE 5	18.2,-24.0	19.2,-25.2	19.9,-26.1	20.4,-26.9

6. Seismic
   - 6.1 Site Class ..... D
   - 6.2 Design Category C
   - 6.3 Importance Factor 1.0
   - 6.4 Seismic Use Group I
   - 6.5 Spectral Response Acceleration
     - 6.5.1 Sms = %g
     - 6.5.2 Sm1 = %g
   - 6.6 Seismic Base Shear
     - 6.6.1 Vx =
     - 6.6.2 Vy =
   - 6.7 Basic Structural System (check one)
     - ☒ Bearing Wall
     - ☐ Building Frame
     - ☐ Moment Frame
     - ☐ Dual w/ Special Moment Frame
     - ☐ Dual w/ Intermediate R/C or Special Steel
     - ☐ Inverted Pendulum
   - 6.8 Arch/Mech Components Anchored? ..... No
   - 6.9 Lateral Design Control: Seismic ☐ Wind ☒
7. Assumed Soil Bearing Capacity 2000psf

SUMMIT
ENGINEERING LABORATORY TESTING

STRUCTURAL PLANS PREPARED FOR:

FOXCROFT NC

PROJECT ADDRESS:
TBD

OWNER:
Smith Douglas Homes - Raleigh
2520 Reliance Ave
Apex, NC 27539

ARCHITECT/DESIGNER:
Smith Douglas Homes
110 Village Trail, Suite 215
Woodstock, GA 30188

These drawings are to be coordinated with the architectural, mechanical, plumbing, electrical, and civil drawings. This coordination is not the responsibility of the structural engineer of record (SER). Should any discrepancies become apparent, the contractor shall notify SUMMIT Engineering, Laboratory & Testing, P.C. before construction begins.

PLAN ABBREVIATIONS:

AB	ANCHOR BOLT	PT	PRESSURE TREATED
AFF	ABOVE FINISHED FLOOR	RS	ROOF SUPPORT
CJ	CEILING JOIST	SC	STUD COLUMN
CLR	CLEAR	SJ	SINGLE JOIST
DJ	DOUBLE JOIST	SPF	SPRUCE PINE FIR
DSP	DOUBLE STUD POCKET	SST	SIMPSON STRONG-TIE
EE	EACH END	SYP	SOUTHERN YELLOW PINE
EW	EACH WAY	TJ	TRIPLE JOIST
NTS	NOT TO SCALE	TSP	TRIPLE STUD POCKET
OC	ON CENTER	TYP	TYPICAL
PSF	POUNDS PER SQUARE FOOT	UNO	UNLESS NOTED OTHERWISE
PSI	POUNDS PER SQUARE INCH	WWF	WELDED WIRE FABRIC

Roof truss and floor joist layouts, and their corresponding loading details, were not provided to SUMMIT Engineering, Laboratory & Testing, P.C. (SUMMIT) prior to the initial design. Therefore, truss and joist directions were assumed based on the information provided by SMITH DOUGLAS HOMES. Subsequent plan revisions based on roof truss and floor joist layouts shall be noted in the revision list, indicating the date the layouts were provided. Should any discrepancies become apparent, the contractor shall notify SUMMIT immediately.

SHEET LIST:

Sheet No.	Description
CS1	Cover Sheet, Specifications, Revisions
CS2	Specifications Continued
S1.0m	Monolithic Slab Foundation
S1.0s	Stem Wall Foundation
S1.0c	Crawl Space Foundation
S1.0b	Basement Foundation
S2.0	Basement Framing Plan
S3.0	First Floor Framing Plan
S4.0	Second Floor Framing Plan
S5.0	Roof Framing Plan
S6.0	Basement Bracing Plan
S7.0	First Floor Bracing Plan
S8.0	Second Floor Bracing Plan

REVISION LIST:

Revision No.	Date	Project No.	Description
1	3/20/19	3832.252	Created NC version of plan with new truss layout
2	6/7/19	3832.252R	Added optional side load garage
3	7/22/20	3832.360	Update rear first floor framing
4	7/29/20	3832.360R	No charge update to plan
5	7/31/20	3832.360R2	Correction to plan
6	8/3/20	3832.360R3	Update to plan per new architecturals
7	7/7/21		Added LIB Option

Cedar Pointe
LOT 15

NORTH CAROLINA PROFESSIONAL SEAL 046048 ENGINEER BRIAN C. PHILBRICK, JR.
7/12/21

STRUCTURAL MEMBERS ONLY

SUMMIT
ENGINEERING LABORATORY TESTING
3070 HAMMOND BUSINESS PLACE, SUITE 171
RALEIGH, NC 27603
OFFICE: 919.380.9991
FAX: 919.380.9993
WWW.SUMMIT-COMPANIES.COM

NORTH CAROLINA CERTIFICATE OF AUTHORIZATION
SUMMIT Engineering, Laboratory & Testing, Inc.
No. F-1454

PROJECT:
FOXCROFT NC RH
Coversheet

CLIENT:
Smith Douglas Homes - Raleigh
2520 Reliance Ave
Apex, NC 27539

DRAWING
DATE: 08/03/2020
SCALE: 1/8"=1'-0"
PROJECT #: 3832.360R3
DRAWN BY: NAK
CHECKED BY: BCP

ORIGINAL INFORMATION
PROJECT # 3832.184
DATE 12/28/2018

CS1

GENERAL STRUCTURAL NOTES:

1. The design professional whose seal appears on these drawings is the structural engineer of record (SER) for this project. The SER bears the responsibility of the primary structural elements and the performance of this structure. No other party may revise, alter, or delete any structural aspects of these construction documents without written permission of SUMMIT Engineering, Laboratory & Testing, P.C. (SUMMIT) or the SER. For the purposes of these construction documents the SER and SUMMIT shall be considered the same entity.
2. The structure is only stable in its completed form. The contractor shall provide all required temporary bracing during construction to stabilize the structure.
3. The SER is not responsible for construction sequences, methods, or techniques in connection with the construction of this structure. The SER will not be held responsible for the contractor's failure to conform to the contract documents, should any non-conformities occur.
4. Any structural elements or details not fully developed on the construction drawings shall be completed under the direction of a licensed professional engineer. These shop drawings shall be submitted to SUMMIT for review before any construction begins. The shop drawings will be reviewed for overall compliance as it relates to the structural design of this project. Verification of the shop drawings for dimensions, or for actual field conditions, is not the responsibility of the SER or SUMMIT.
5. Verification of assumed field conditions is not the responsibility of the SER. The contractor shall verify the field conditions for accuracy and report any discrepancies to SUMMIT before construction begins.
6. The SER is not responsible for any secondary structural elements or non-structural elements, except for the elements specifically noted on the structural drawings.
7. This structure and all construction shall conform to all applicable sections of the international residential code.
8. This structure and all construction shall conform to all applicable sections of the 2018 North Carolina Residential Code (NCRC) and any local codes or restrictions

FOUNDATIONS:

1. Foundations shall be constructed in accordance with chapter 4 of the 2018 NC Residential Building Code (Special consideration shall be given to Chapter 45 in wind zones above 130mph)
2. Footing sizes based on a presumptive soil bearing capacity of 2000 PSF. Contractor is solely responsible for verifying the suitability of the site soil conditions at the time of construction
3. Maximum depth of unbalanced fill against masonry walls to be as specified in section R404.1 of the 2018 NCRC
4. The structural engineer has not performed a subsurface investigation. Verification of this assumed value is the responsibility of the owner or the contractor. Should any adverse soil condition be encountered the SER must be contacted before proceeding.
5. The bottom of all footings shall extend below the frost line for the region in which the structure is to be constructed. However, the bottom of all footings shall be a minimum of 12" below grade.
6. Any fill shall be placed under the direction or recommendation of a licensed professional engineer. The resulting soil shall be compacted to a minimum of 95% maximum dry density.
7. Excavations of footings shall be lined temporarily with a 6 mil polyethylene membrane if placement of concrete does not occur within 24 hours of excavation.
8. No concrete shall be placed against any subgrade containing water, ice, frost, or loose material.
9. Each crawl space pier shall bear in the middle third of its respective footing and each girder shall bearing in the middle third of the piers. Pilasters to be bonded to perimeter foundation wall
10. Crawl spaced to be graded level and clear of all debris
11. Provide foundation waterproofing and drain with positive slope to outlet as required by site conditions
12. Energy efficiency compliance and insulation of the structure to be in accordance with chapter 11 of the 2018 NCRC

CONCRETE:

1. Concrete shall have a normal weight aggregate and a minimum compressive strength (f'c) at 28 days of 3000 psi, unless otherwise noted on the plan.
2. Concrete shall be proportioned, mixed, and placed in accordance with the latest editions of ACI 318: "Building Code Requirements for Reinforced Concrete" and ACI 301: "Specifications for Structural Concrete for Buildings".
3. Air entrained concrete must be used for all structural elements exposed to freeze/thaw cycles and deicing chemicals. Air entrainment amounts (in percent) shall be within -1% to +2% of target values as follows:
   3.1. Footings: 5%
   3.2. Exterior Slabs: 5%
4. No admixtures shall be added to any structural concrete without written permission of the SER
5. Concrete slabs-on-grade shall be constructed in accordance with ACI 302.1R-96: "Guide for Concrete Slab and Slab Construction".
6. The concrete slab-on-grade has been designed using a subgrade modulus of k=250 pci and a design loading of 200 psf. The SER is not responsible for differential settlement, slab cracking or other future defects resulting from unreported conditions not in accordance with the above assumptions.
7. Control or saw cut joints shall be spaced in interior slabs-on-grade at a maximum of 15'-0" O.C. and in exterior slabs-on-grade at a maximum of 10'-0" unless otherwise noted.
8. Control or saw cut joints shall be produced using conventional process within 4 to 12 hours after the slab has been finished
9. Reinforcing steel may not extend through a control joint. Reinforcing steel may extend through a saw cut joint.
10. All welded wire fabric (WWF.) for concrete slabs-on-grade shall be placed at mid-depth of slab. The WWF. shall be securely supported during the concrete pour. Fibermesh may be used in lieu of WWF.

CONCRETE REINFORCEMENT:

1. Fibrous concrete reinforcement, or fibermesh, specified in concrete slabs-on-grade may be used for control of cracking due to shrinkage and thermal expansion/contraction, lowered water migration, an increase in impact capacity, increased abrasion resistance, and residual strength.
2. Fibermesh reinforcing to be 100% virgin polypropylene fibers containing no reprocessed olefin materials and specifically manufactured for use as concrete secondary reinforcement.
3. Application of fibermesh per cubic yard of concrete shall equal a minimum of 0.1% by volume (1.5 pounds per cubic yard)
4. Fibermesh shall comply with ASTM C1116, any local building code requirements, and shall meet or exceed the current industry standard.
5. Steel Reinforcing bars shall be new billet steel conforming to ASTM A615, grade 60.
6. Detailing, fabrication, and placement of reinforcing steel shall be in accordance with the latest edition of ACI 315: "Manual of Standard Practice for Detailing Concrete Structures"
7. Horizontal footing and wall reinforcement shall be continuous and shall have 90° bends, or corner bars with the same size/spacing as the horizontal reinforcement with a class B tension splice.
8. Lap reinforcement as required, a minimum of 40 bar diameters for tension or compression unless otherwise noted. Splices in masonry shall be a minimum of 48 bar diameters.
9. Where reinforcing dowels are required , they shall be equivalent in size and spacing to the vertical reinforcement. The dowel shall extend 48 bar diameters vertically and 20 bar diameters into the footing.
10. Where reinforcing steel is required vertically, dowels shall be provided unless otherwise noted.

WOOD FRAMING:

1. Solid sawn wood framing members shall conform to the specifications listed in the latest edition of the "National Design Specification for Wood Construction" (NDS). Unless otherwise noted, all wood framing members are designed to be Spruce-Pine-Fir (SPF) #2.
2. LVL or PSL engineered wood shall have the following minimum design values:
   2.1. E = 1,900,000 psi
   2.2. Fb = 2600 psi
   2.3. Fv = 285 psi
   2.4. Fc = 700 psi
3. Wood in contact with concrete, masonry, or earth shall be pressure treated in accordance with AWPA standard C-15. All other moisture exposed wood shall be treated in accordance with AWPA standard C-2
4. Nails shall be common wire nails unless otherwise noted.
5. Lag screws shall conform to ANSI/ASME standard B18.2.1-1981. Lead holes for lag screws shall be in accordance with NDS specifications.
6. All beams shall have full bearing on supporting framing members unless otherwise noted.
7. Exterior and load bearing stud walls are to be 2x4 SPF#2 @16" O.C. unless otherwise noted. Studs shall be continuous from the sole plate to the double top plate. Studs shall only be discontinuous at headers for window/door openings. A minimum of one king stud shall be placed at each end of the header. King studs shall be continuous.
8. Individual studs forming a column shall be attached with one 10d nail @6" O.C. staggered. The stud column shall be continuous to the foundation or beam. The column shall be fully blocked at all floor levels to ensure proper load transfer.
9. Multi-ply beams shall have each ply attached wth (3)10d nails @ 24" O.C.
10. Flitch beams and four and five ply beams shall be bolted together with (2) rows of 1/2" dia. through bolts staggered @24" O.C. w/ 2" edge distance and (2) bolts located at 6" from each end, unless noted otherwise.

WOOD TRUSSES:

1. The wood truss manufacturer/fabricator is responsible for the design of the wood trusses. Submit sealed shop drawings and supporting calculations to the SER for review prior to fabrication. The SER shall have a minimum of five (5) days for review. The review by the SER shall review for overall compliance with the design documents. The SER shall assume no responsibility for the correctness for the structural design for the wood trusses.
2. The wood trusses shall be designed for all required loadings as specified in the local building code, the ASCE Standard "Minimum Design Loads for Buildings and Other Structures." (ASCE 7-10), and the loading requirements shown on these specifications. The truss drawings shall be coordinated with all other construction documents and provisions provided for loads shown on these drawings including but not limited to HVAC equipment, piping, and architectural fixtures attached to the trusses.
3. The trusses shall be designed, fabricated, and erected in accordance with the latest edition of the "National Design Specification for Wood Construction." (NDS) and "Design Specification for Metal Plate Connected Wood Trusses."
4. The truss manufacturer shall provide adequate bracing information in accordance with "Commentary and Recommendations for Handling, Installing, and Bracing Metal Plate Connected Wood Trusses" (HIB-91). This bracing, both temporary and permanent, shall be shown on the shop drawings. Also, the shop drawings shall show the required attachments for the trusses.
5. Any chords or truss webs shown on these drawings have been shown as a reference only. The final design of the trusses shall be per the manufacturer.

WOOD STRUCTURAL PANELS:

1. Fabrication and placement of structural wood sheathing shall be in accordance with the APA Design/Construction Guide "Residential and Commercial," and all other applicable APA standards.
2. All structurally required wood sheathing shall bear the mark of the APA.
3. Wood wall sheathing shall comply with the requirements of local building codes for the appropriate state as indicated on these drawings. Refer to wall bracing notes in plan set for more information. Sheathing shall be applied with the long direction perpendicular to framing, unless noted otherwise.
4. Roof sheathing shall be APA rated sheathing exposure 1 or 2. Roof sheathing shall be continuous over two supports and attached to its supporting roof framing with (1)-8d CC nail at 6"o/c at panel edges and at 12"o/c in panel field unless otherwise noted on the plans. Sheathing shall be applied with the long direction perpendicular to framing. Sheathing shall have a span rating consistent with the framing spacing. Use suitable edge support by use of plywood clips or lumber blocking unless otherwise noted. Panel end joints shall occur over framing. Apply building paper over the sheathing as required by the state Building Code.
5. Wood floor sheathing shall be APA rated sheathing exposure 1 or 2. Attach sheathing to its supporting framing with (1)-8d CC ringshank nail at 6"o/c at panel edges and at 12"o/c in panel field unless otherwise noted on the plans. Sheathing shall be applied perpendicular to framing. Sheathing shall have a span rating consistent with the framing spacing. Use suitable edge support by use of T&G plywood or lumber blocking unless otherwise noted. Panel end joints shall occur over framing. Apply building paper over the sheathing as required by the state Building Code.
6. Sheathing shall have a 1/8" gap at panel ends and edges as recommended in accordance with the APA.

STRUCTURAL FIBERBOARD PANELS:

1. Fabrication and placement of structural fiberboard sheathing shall be in accordance with the applicable AFA standards.
2. Fiberboard wall sheathing shall comply with the requirements of local building codes for the appropriate state as indicated on these drawings. Refer to wall bracing notes in plan set for more information.
3. Sheathing shall have a 1/8" gap at panel ends and edges are recommended in accordance with the AFA.

EXTERIOR WOOD FRAMED DECKS:

1. Decks are to be framed in accordance with local building codes and as referenced on the structural plans, either through code references or construction details.

STRUCTURAL STEEL:

1. Structural steel shall be fabricated and erected in accordance with the American Institute of Steel Construction "Code of Standard Practice for Steel Buildings and Bridges" and of the manual of Steel Construction "Load Resistance Factor Design" latest editions.
2. All steel shall have a minimum yield stress (Fy) of 36 ksi unless otherwise noted.
3. Welding shall conform to the latest edition of the American Welding Society's Structural Welding Code AWS D1.1. Electrodes for shopt and field welding shall be class E70XX. All welding shall be performed by a certified welder per the above standards.

Cedar Pointe
LOT 15

NORTH CAROLINA PROFESSIONAL SEAL 046048 ENGINEER BRIAN C. PHILBRICK, JR.

11/12/21

STRUCTURAL MEMBERS ONLY

SUMMIT
ENGINEERING LABORATORY TESTING
3070 HAMMOND BUSINESS PLACE, SUITE 171
RALEIGH, NC 27603
OFFICE: 919.380.9991
FAX: 919.380.9993
WWW.SUMMIT-COMPANIES.COM

NORTH CAROLINA CERTIFICATE OF AUTHORIZATION
SUMMIT Engineering, Laboratory & Testing, Inc.
No. F-1454

PROJECT:
FOXCROFT NC RH
Coversheet

CLIENT:
Smith Douglas Homes - Raleigh
2520 Reliance Ave
Apex, NC 27539

DRAWING
DATE: 08/03/2020
SCALE: 1/8"=1'-0"
PROJECT #: 3832360R3
DRAWN BY: NAK
CHECKED BY: BCP

ORIGINAL INFORMATION

PROJECT #	DATE
3832184	12/28/2018

CS2

FOUNDATION NOTES:

1. FOUNDATIONS TO BE CONSTRUCTED IN ACCORDANCE WITH CHAPTER 4 OF THE 2018 NORTH CAROLINA RESIDENTIAL BUILDING CODE WITH ALL LOCAL AMENDMENTS.
2. STRUCTURAL CONCRETE TO BE F_c = 3000 PSI, PREPARED AND PLACED IN ACCORDANCE WITH ACI STANDARD 318.
3. FOOTINGS TO BE PLACED ON UNDISTURBED EARTH, BEARING A MINIMUM OF 12" BELOW ADJACENT FINISHED GRADE, OR AS OTHERWISE DIRECTED BY THE CODE ENFORCEMENT OFFICIAL.
4. FOOTING SIZES BASED ON A PRESUMPTIVE SOIL BEARING CAPACITY OF 2000 PSF. CONTRACTOR IS SOLELY RESPONSIBLE FOR VERIFYING THE SUITABILITY OF THE SITE SOIL CONDITIONS AT THE TIME OF CONSTRUCTION.
5. FOOTINGS AND PIERS SHALL BE CENTERED UNDER THEIR RESPECTIVE ELEMENTS. PROVIDE 2" MINIMUM FOOTING PROJECTION FROM THE FACE OF MASONRY.
6. MAXIMUM DEPTH OF UNBALANCED FILL AGAINST MASONRY WALLS TO BE AS SPECIFIED IN SECTION R404.1 OF THE 2018 NORTH CAROLINA RESIDENTIAL BUILDING CODE.
7. PILASTERS TO BE BONDED TO PERIMETER FOUNDATION WALL.
8. PROVIDE FOUNDATION WATERPROOFING, AND DRAIN WITH POSITIVE SLOPE TO OUTLET AS REQUIRED BY SITE CONDITIONS.
9. PROVIDED PERIMETER INSULATION FOR ALL FOUNDATIONS PER 2018 NORTH CAROLINA RESIDENTIAL BUILDING CODE.
10. CORBEL FOUNDATION WALL AS REQUIRED TO ACCOMMODATE BRICK VENEERS.
11. CRAWL SPACE TO BE GRADED LEVEL, AND CLEARED OF ALL DEBRIS.
12. FOUNDATION ANCHORAGE SHALL BE CONSTRUCTED PER THE 2018 NORTH CAROLINA RESIDENTIAL CODE SECTION R403.1.6. MINIMUM 1/2" DIA. BOLTS SPACED AT 6'-0" ON CENTER WITH A 7" MINIMUM EMBEDMENT INTO MASONRY OR CONCRETE. ANCHOR BOLTS SHALL BE 12" FROM THE END OF EACH PLATE SECTION. MINIMUM (2) ANCHOR BOLTS PER PLATE SECTION. ANCHOR BOLTS SHALL BE LOCATED IN THE CENTER THIRD OF THE PLATE.
13. ABBREVIATIONS:

DJ = DOUBLE JOIST	SJ = SINGLE JOIST
GT = GIRDER TRUSS	FT = FLOOR TRUSS
SC = STUD COLUMN	DR = DOUBLE RAFTER
EE = EACH END	TR = TRIPLE RAFTER
TJ = TRIPLE JOIST	OC = ON CENTER
CL = CENTER LINE	PL = POINT LOAD

14. ALL PIERS TO BE 16"x16" MASONRY AND ALL PILASTERS TO BE 8"x16" MASONRY, TYPICAL. (UNO)
15. WALL FOOTINGS TO BE CONTINUOUS CONCRETE. SIZES PER STRUCTURAL PLAN.
16. A FOUNDATION EXCAVATION OBSERVATION SHOULD BE CONDUCTED BY A PROFESSIONAL GEOTECHNICAL ENGINEER OR HIS QUALIFIED REPRESENTATIVE. IF ISOLATED AREAS OF YIELDING MATERIALS AND/OR POTENTIALLY EXPANSIVE SOILS ARE OBSERVED IN THE FOOTING EXCAVATIONS AT THE TIME OF CONSTRUCTION, SUMMIT ENGINEERING, LABORATORY & TESTING, P.C. MUST BE PROVIDED THE OPPORTUNITY TO REVIEW THE FOOTING DESIGN PRIOR TO CONCRETE PLACEMENT.
17. ALL FOOTINGS & SLABS ARE TO BEAR ON UNDISTURBED SOIL OR 95% COMPACTED FILL, VERIFIED BY ENGINEER OR CODE OFFICIAL.

REFER TO BRACED WALL PLAN FOR PANEL LOCATIONS AND ANY REQUIRED HOLDOWNS. ADDITIONAL INFO. PER SECTION R602.10.4 AND FIGURE R602.10.3.4) OF THE 2018 NCRC.

NOTE: ALL EXTERIOR FOUNDATION DIMENSIONS ARE TO FRAMING AND NOT BRICK VENEER, UNO

NOTE: A 4" CRUSHED STONE BASE COURSE IS NOT REQUIRED WHEN SLAB IS INSTALLED ON WELL-DRAINED OR SAND-GRAVEL MIXTURE SOILS CLASSIFIED AS GROUP 1 PER TABLE R405.1

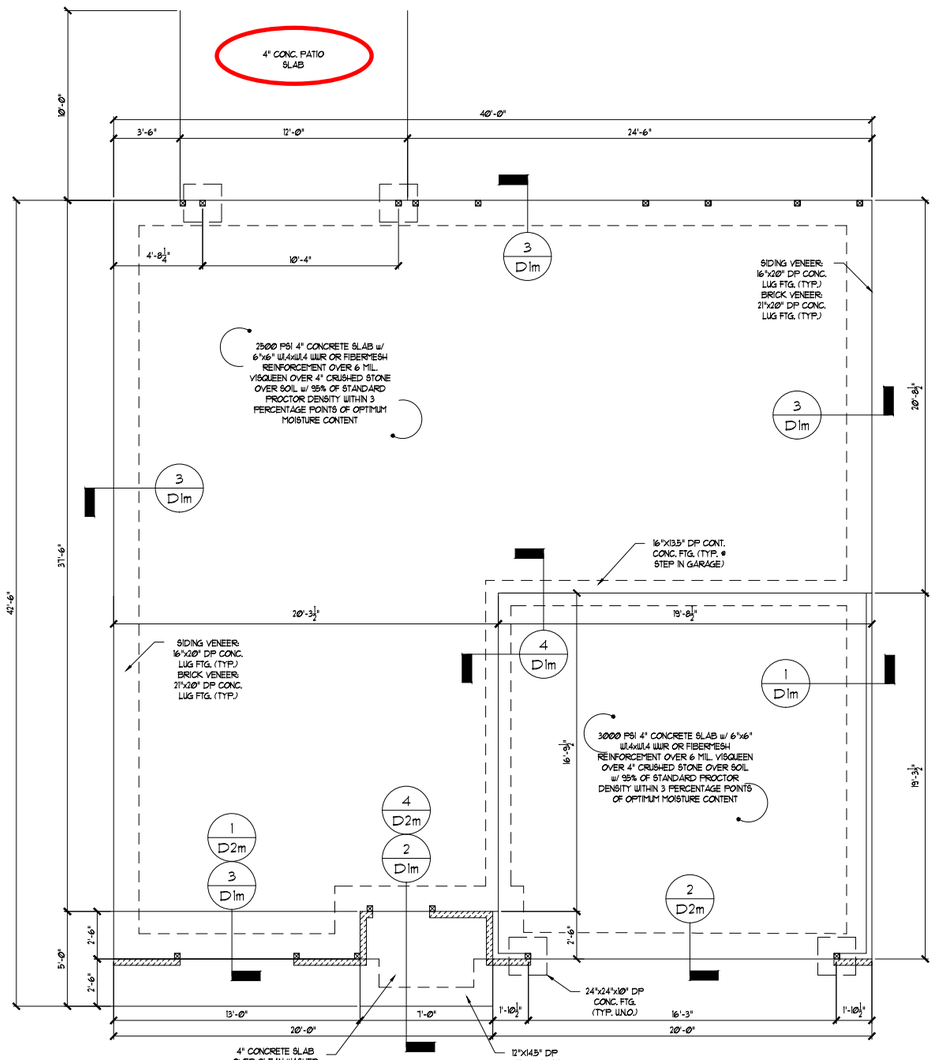

ALL ELEVATIONS

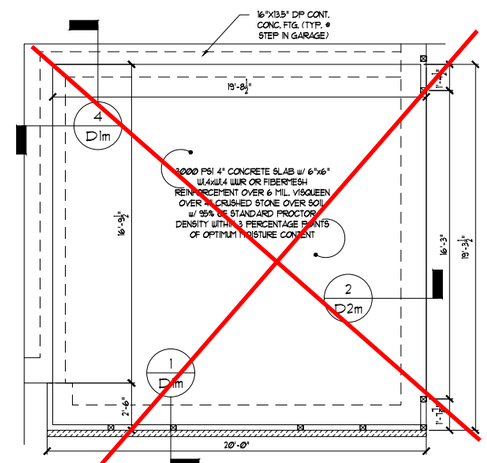

OPT. SIDE LOAD

THESE PLANS ARE DESIGNED IN ACCORDANCE WITH ARCHITECTURAL PLANS PROVIDED BY SMITH DOUGLAS HOMES COMPLETED/REVISED ON 07/24/2020. IT IS THE RESPONSIBILITY OF THE CLIENT TO NOTIFY SUMMIT ENGINEERING, LABORATORY & TESTING, P.C. IF ANY CHANGES ARE MADE TO THE ARCHITECTURAL PLANS PRIOR TO CONSTRUCTION. SUMMIT CANNOT GUARANTEE THE ADEQUACY OF THESE STRUCTURAL PLANS WHEN USED WITH ARCHITECTURAL PLANS DATED DIFFERENTLY THAN THE DATE LISTED ABOVE.

STRUCTURAL MEMBERS ONLY

ENGINEERING SEAL APPLIES ONLY TO STRUCTURAL COMPONENTS ON THIS DOCUMENT, SEAL DOES NOT INCLUDE CONSTRUCTION MEANS, METHODS, TECHNIQUES, SEQUENCES, PROCEDURES OR SAFETY PRECAUTIONS. ANY DEVIATIONS OR DISCREPANCIES ON PLANS ARE TO BE BROUGHT TO THE IMMEDIATE ATTENTION OF SUMMIT ENGINEERING, LABORATORY & TESTING, P.C. FAILURE TO DO SO WILL VOID SUMMIT LIABILITY.

STRUCTURAL ANALYSIS BASED ON 2018 NCRC.

Cedar Pointe
LOT 15

NORTH CAROLINA PROFESSIONAL SEAL 046048 ENGINEER BRIAN C. PHILBRICK, JR.

7/21/21

STRUCTURAL MEMBERS ONLY

SUMMIT
ENGINEERING LABORATORY TESTING
3070 HAMMOND BUSINESS PLACE, SUITE 171
RALEIGH, NC 27603
OFFICE: 919.380.9991
FAX: 919.380.9993
WWW.SUMMIT-COMPANIES.COM

NORTH CAROLINA CERTIFICATE OF AUTHORIZATION
SUMMIT Engineering, Laboratory & Testing, Inc. No. F-1454

PROJECT:
FOXCROFT NC RH
Monolithic Slab Fnd.

CLIENT:
Smith Douglas Homes - Raleigh
2520 Reliance Ave
Apex, NC 27539

DRAWING
DATE: 08/03/2020
SCALE: 1/8"=1'-0"
PROJECT #: 3832360R3
DRAWN BY: NAK
CHECKED BY: BCP

ORIGINAL INFORMATION

PROJECT #	DATE
3832184	12/28/2018

S1.0m

GENERAL STRUCTURAL NOTES:

1. CONSTRUCTION SHALL CONFORM TO 2018 NORTH CAROLINA RESIDENTIAL BUILDING CODE WITH ALL LOCAL AMENDMENTS.
2. CONTRACTOR SHALL VERIFY ALL DIMENSIONS. CONTRACTOR SHALL COMPLY WITH THE CONTENTS OF THE DRAWING FOR THIS SPECIFIC PROJECT. ENGINEER IS NOT RESPONSIBLE FOR ANY DEVIATIONS FROM THIS PLAN.
3. CONTRACTOR IS RESPONSIBLE FOR PROVIDING TEMPORARY BRACING REQUIRED TO RESIST ALL FORCES ENCOUNTERED DURING ERECTION.
4. PROPERTIES USED IN THE DESIGN ARE AS FOLLOWS:
   MICROLLAM (LVL): F_b = 2600 PSI, F_v = 285 PSI, E = 1.9×10^6 PSI
   PARALLAM (PSL): F_b = 2900 PSI, F_v = 290 PSI, E = 1.25×10^6 PSI
5. ALL WOOD MEMBERS SHALL BE #2 SPF UNLESS NOTED ON PLAN. ALL STUD COLUMNS AND JOISTS SHALL BE #2 SPF (UNO).
6. ALL BEAMS SHALL BE SUPPORTED WITH A (2) 2x4 #2 SPF STUD COLUMN AT EACH END UNLESS NOTED OTHERWISE.
7. ALL REINFORCING STEEL SHALL BE GRADE 60 BARS CONFORMING TO ASTM A615 AND SHALL HAVE A MINIMUM COVER OF 3".
8. FOUNDATION ANCHORAGE SHALL BE CONSTRUCTED PER THE 2018 NORTH CAROLINA RESIDENTIAL CODE SECTION R403.1.6. MINIMUM 1/2" DIA BOLTS SPACED AT 6'-0" ON CENTER WITH A 7" MINIMUM EMBEDMENT INTO MASONRY OR CONCRETE. ANCHOR BOLTS SHALL BE 12" FROM THE END OF EACH PLATE SECTION. MINIMUM (2) ANCHOR BOLTS PER PLATE SECTION. ANCHOR BOLTS SHALL BE LOCATED IN THE CENTER THIRD OF THE PLATE.
9. CONTRACTOR TO PROVIDED LOOKOUTS WHEN CEILING JOISTS SPAN PERPENDICULAR TO RAFTERS.
10. FLITCH BEAMS, 4-PLY LVLS AND 3-PLY SIDE LOADED LVLS SHALL BE BOLTED TOGETHER WITH 1/2" DIA. THRU BOLTS SPACED AT 24" O.C. (MAX) STAGGERED OR EQUIVALENT CONNECTIONS PER DETAIL 1/D3f. MIN. EDGE DISTANCE SHALL BE 2" AND (2) BOLTS SHALL BE LOCATED MINIMUM 6" FROM EACH END OF THE BEAM.
11. ALL NON-LOAD BEARING HEADERS SHALL BE (1) FLAT 2x4 SPF #2, DROPPED. FOR NON-LOAD BEARING HEADERS EXCEEDING 8'-0" IN WIDTH AND/OR WITH MORE THAN 2'-0" OF CRIPPLE WALL ABOVE, SHALL BE (2) FLAT 2x4 SPF #2, DROPPED. (UNLESS NOTED OTHERWISE)
12. ABBREVIATIONS:

DJ = DOUBLE JOIST	SJ = SINGLE JOIST
GT = GIRDER TRUSS	FT = FLOOR TRUSS
SC = STUD COLUMN	DR = DOUBLE RAFTER
EE = EACH END	TR = TRIPLE RAFTER
TJ = TRIPLE JOIST	OC = ON CENTER
CL = CENTER LINE	PL = POINT LOAD

NOTE:
---------: DESIGNATES JOIST SUPPORTED LOAD BEARING WALL ABOVE. PROVIDE BLOCKING UNDER JOIST SUPPORTED LOAD BEARING WALL.

NOTE: SHADED WALLS INDICATE LOAD BEARING WALLS

JOIST & BEAM SIZES SHOWN ARE MINIMUMS. BUILDER MAY INCREASE DEPTH FOR EASE OF CONSTRUCTION.

NOTE: REDUCE JOIST SPACING UNDER TILE FLOORS, GRANITE COUNTERTOPS AND/OR ISLANDS.

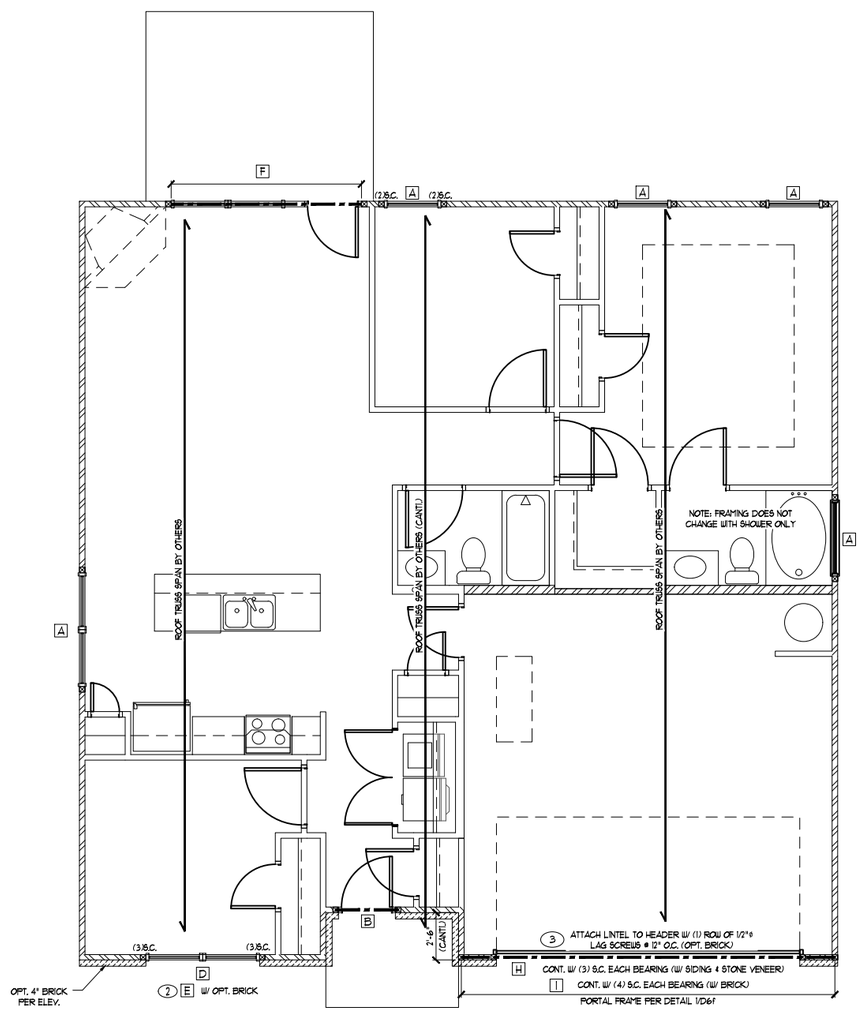

ALL ELEVATIONS

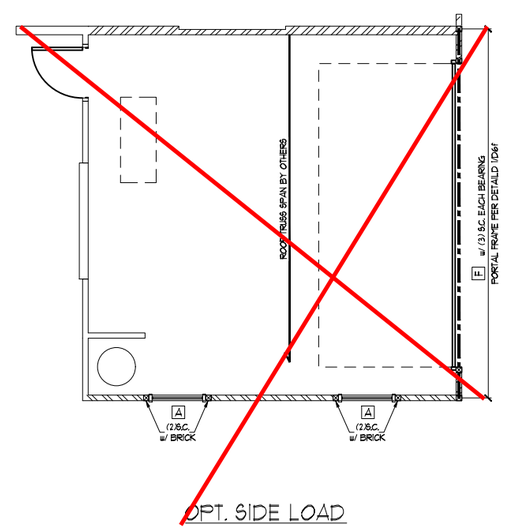

OPT. SIDE LOAD

KING STUD REQUIREMENTS

OPENING WIDTH (FT)	KINGS (EACH END)	
	16" O.C.	24" O.C.
LESS THAN 3'-0"	(1)	(1)
3'-0 TO 4'-0"	(2)	(1)
4'-0" TO 8'-0"	(3)	(2)
8'-0" TO 12'-0"	(5)	(3)
12'-0" TO 16'-0"	(6)	(4)

KING STUD REQUIREMENTS ABOVE DO NOT APPLY TO PORTAL FRAMED OPENINGS

HEADER/BEAM SCHEDULE

HEADER TAG	BEAM TAG	SIZE	JACKS (EACH END)
-	B1	(1) 14" FLOOR JOIST	(2)
-	B2	(2) 14" FLOOR JOIST	(2)
A	B3	(2) 2x6	(1)
B	B4	(2) 2x8	(2)
C	B5	(2) 2x10	(2)
D	B6	(2) 2x12	(2)
E	B7	(2) 9-1/4" LVL	(3)
F	B8	(2) 11-7/8" LVL	(3)
G	B9	(2) 14" LVL	(3)
H	B10	(2) 16" LVL	(3)
I	B11	(2) 18" LVL	(3)
J	B12	(2) 24" LVL	(4)
K	B13	(3) 9-1/4" LVL	(3)
L	B14	(3) 11-7/8" LVL	(3)
M	B16	(3) 14" LVL	(3)
N	B17	(3) 16" LVL	(3)
O	B18	(3) 18" LVL	(3)
P	B19	(3) 24" LVL	(4)

HEADER/BEAM SIZES SHOWN ON PLANS ARE MINIMUMS. GREATER HEADER/BEAM SIZES MAY BE USED FOR EASE OF CONSTRUCTION. ALL HEADERS TO BE DROPPED UNLESS NOTED OTHERWISE. ALL BEAMS TO BE FLUSH UNLESS NOTED OTHERWISE.

LINTEL SCHEDULE

TAG	SIZE	OPENING SIZE
1	L3x3x1/4"	LESS THAN 6'-0"
2	L5x3x1/4"	6'-0" TO 10'-0"
3	L5x3-1/2"x5/16"	GREATER THAN 10'-0"
4	L5x3-1/2"x5/16" ROLLED OR EQUIV.	ALL ARCHED OPENINGS

SECURE LINTEL TO HEADER W/ (2) 1/2" DIAMETER LAG SCREWS STAGGERED @ 16" O.C. (TYP FOR 3)

ALL HEADERS WITH BRICK ABOVE: 1 (UNO)

WALL STUD SCHEDULE

1ST & 2ND FLOOR LOAD BEARING WALLS:
2x6 STUDS @ 24" O.C. OR 2x4 STUDS @ 16" O.C.
1ST FLOOR LOAD BEARING WALLS SUPPORTING 2ND FLOOR + WALK-UP ATTIC:
2x6 STUDS @ 16" O.C. OR 2x4 STUDS @ 12" O.C.
BASEMENT LOAD BEARING WALLS:
2x6 STUDS @ 16" O.C. OR 2x4 STUDS @ 12" O.C.
NON-LOAD BEARING WALLS (ALL FLOORS):
2x4 STUDS @ 24" O.C.
TWO STORY WALLS:
2x4 STUDS @ 12" O.C. OR 2x6 STUDS @ 16" O.C.
W/ 2X BRACING @ 6'-0" O.C. VERTICALLY
(AKA. "BALLOON FRAMING")

Cedar Pointe
LOT 15

THESE PLANS ARE DESIGNED IN ACCORDANCE WITH ARCHITECTURAL PLANS PROVIDED BY SMITH DOUGLAS HOMES COMPLETED/REVISED ON 08/24/2020. IT IS THE RESPONSIBILITY OF THE CLIENT TO NOTIFY SUMMIT ENGINEERING, LABORATORY & TESTING, P.C. IF ANY CHANGES ARE MADE TO THE ARCHITECTURAL PLANS PRIOR TO CONSTRUCTION. SUMMIT CANNOT GUARANTEE THE ADEQUACY OF THESE STRUCTURAL PLANS WHEN USED WITH ARCHITECTURAL PLANS DATED DIFFERENTLY THAN THE DATE LISTED ABOVE.

STRUCTURAL MEMBERS ONLY

ENGINEERING SEAL APPLIES ONLY TO STRUCTURAL COMPONENTS ON THIS DOCUMENT, SEAL DOES NOT INCLUDE CONSTRUCTION MEANS, METHODS, TECHNIQUES, SEQUENCES, PROCEDURES OR SAFETY PRECAUTIONS. ANY DEVIATIONS OR DISCREPANCIES ON PLANS ARE TO BE BROUGHT TO THE IMMEDIATE ATTENTION OF SUMMIT ENGINEERING, LABORATORY & TESTING, P.C. FAILURE TO DO SO WILL VOID SUMMIT LIABILITY.

STRUCTURAL ANALYSIS BASED ON 2018 NCRC.

NORTH CAROLINA PROFESSIONAL SEAL 046048 ENGINEER BRIAN C. PHILBRICK, JR.
9/2/21

STRUCTURAL MEMBERS ONLY

SUMMIT
ENGINEERING LABORATORY TESTING
3070 HAMMOND BUSINESS PLACE, SUITE 171
RALEIGH, NC 27603
OFFICE: 919.380.9991
FAX: 919.380.9993
WWW.SUMMIT-COMPANIES.COM

NORTH CAROLINA CERTIFICATE OF AUTHORIZATION
SUMMIT Engineering, Laboratory & Testing, Inc.
No. F-1454

PROJECT:
FOXCROFT NC RH
First Floor Framing

CLIENT:
Smith Douglas Homes - Raleigh
2520 Reliance Ave
Apex, NC 27539

DRAWING
DATE: 08/03/2020
SCALE: 1/8"=1'-0"
PROJECT #: 3832360R3
DRAWN BY: NAK
CHECKED BY: BCP

ORIGINAL INFORMATION

PROJECT #	DATE
3832184	12/28/2018

S3.0

TRUSS UPLIFT CONNECTOR SCHEDULE

MAX. UPLIFT	ROOF TO WALL	FLOOR TO FLOOR	FLOOR TO FND
535 LBS	H2.5A	PER WALL SHEATHING & FASTENERS	
970 LBS	(2) H2.5A	CS16 (END + 13")	DTT2Z
1245 LBS	HTS20	CS16 (END + 13")	DTT2Z
1720 LBS	(2) HTS20	(2) CS16 (END + 13")	DTT2Z
2490 LBS	(2) HTS20	(2) CS16 (END + 13")	HTT4
2365 LBS	LGT3-SDS25	(2) CS16 (END + 13")	HTT4

1. ALL PRODUCTS LISTED ARE SIMPSON STRONG-TIE. EQUIVALENT PRODUCTS MAY BE USED PER MANUFACTURER'S SPECIFICATIONS.
2. UPLIFT VALUES LISTED ARE FOR SPF #2 GRADE MEMBERS.
3. REFER TO TRUSS LAYOUT PER MANUF. FOR UPLIFT VALUES AND TRUSS TO TRUSS CONNECTIONS. CONNECTORS SPECIFIED BY TRUSS MANUFACTURER OVERRIDE THOSE LISTED ABOVE.
4. CONTACT SUMMIT FOR REQUIRED CONNECTORS WHEN LOADS EXCEED THOSE LISTED ABOVE.

NOTE: 1ST PLY OF ALL SHOWN GIRDER TRUSSES TO ALIGN WITH INSIDE FACE OF WALL (TYP, UNO)

NOTE: ROOF TRUSSES SHALL BE SPACED TO SUPPORT FALSE FRAMED DORMER WALLS (TYP, UNO)

NOTE: TRUSS UPLIFT LOADS SHALL BE DETERMINED PER TRUSS MANUFACTURER IN ACCORDANCE WITH SECTION R802.11.1. WALL SHEATHING AND FASTENERS HAVE BEEN DESIGNED TO RESIST THE WIND UPLIFT LOAD PATH IN ACCORDANCE WITH METHOD 3 OF SECTION R602.3.5 OF THE 2018 NCRC. REFER TO BRACED WALL PLANS FOR SHEATHING AND FASTENER REQUIREMENTS.

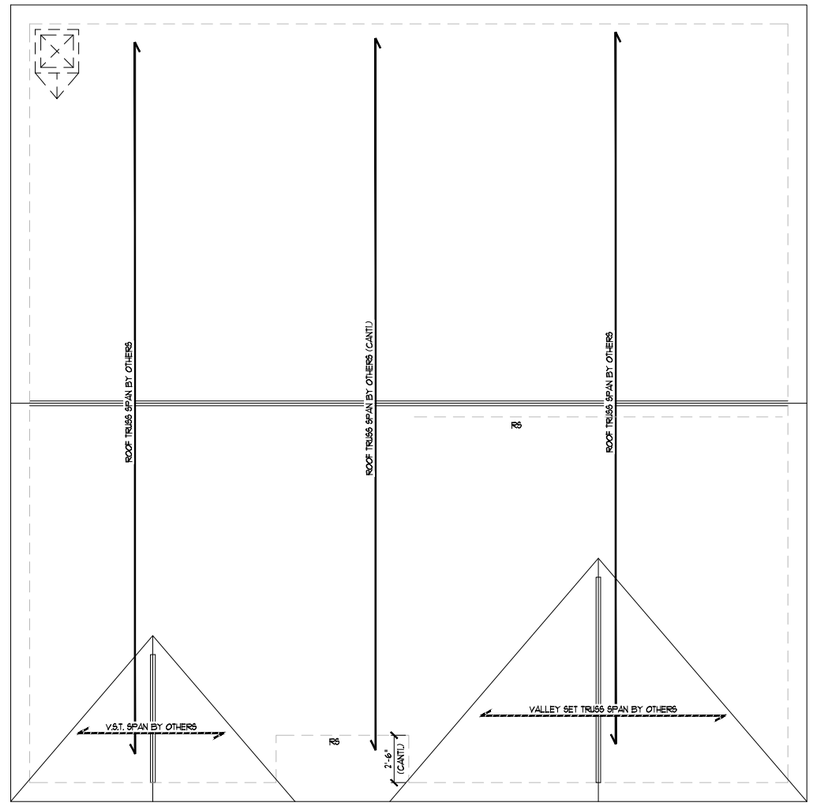

ELEVATION C,F,I

RS = ROOF SUPPORT

Cedar Pointe
LOT 15

THESE PLANS ARE DESIGNED IN ACCORDANCE WITH ARCHITECTURAL PLANS PROVIDED BY SMITH DOUGLAS HOMES COMPLETED/REVISED ON 07/24/2020. IT IS THE RESPONSIBILITY OF THE CLIENT TO NOTIFY SUMMIT ENGINEERING, LABORATORY & TESTING, P.C. IF ANY CHANGES ARE MADE TO THE ARCHITECTURAL PLANS PRIOR TO CONSTRUCTION. SUMMIT CANNOT GUARANTEE THE ADEQUACY OF THESE STRUCTURAL PLANS WHEN USED WITH ARCHITECTURAL PLANS DATED DIFFERENTLY THAN THE DATE LISTED ABOVE.

STRUCTURAL MEMBERS ONLY

ENGINEERING SEAL APPLIES ONLY TO STRUCTURAL COMPONENTS ON THIS DOCUMENT, SEAL DOES NOT INCLUDE CONSTRUCTION MEANS, METHODS, TECHNIQUES, SEQUENCES, PROCEDURES OR SAFETY PRECAUTIONS. ANY DEVIATIONS OR DISCREPANCIES ON PLANS ARE TO BE BROUGHT TO THE IMMEDIATE ATTENTION OF SUMMIT ENGINEERING, LABORATORY & TESTING, P.C. FAILURE TO DO SO WILL VOID SUMMIT LIABILITY.

STRUCTURAL ANALYSIS BASED ON 2018 NCRC.

NORTH CAROLINA PROFESSIONAL SEAL 046048 ENGINEER BRIAN C. PHILBRICK, JR.

2/12/21

STRUCTURAL MEMBERS ONLY

SUMMIT
ENGINEERING LABORATORY TESTING
3070 HAMMOND BUSINESS PLACE, SUITE 171
RALEIGH, NC 27603
OFFICE: 919.380.9991
FAX: 919.380.9993
WWW.SUMMIT-COMPANIES.COM

NORTH CAROLINA CERTIFICATE OF AUTHORIZATION
SUMMIT Engineering, Laboratory & Testing, Inc.
No. F-1454

PROJECT:
FOXCROFT NC RH
Roof Framing Plan

CLIENT:
Smith Douglas Homes - Raleigh
2520 Reliance Ave
Apex, NC 27539

DRAWING
DATE: 08/03/2020
SCALE: 1/8"=1'-0"
PROJECT #: 3832360R3
DRAWN BY: NAK
CHECKED BY: BCP

ORIGINAL INFORMATION

PROJECT #	DATE
3832184	12/28/2018

S5.1

REQUIRED BRACED WALL PANEL CONNECTIONS				
METHOD	MATERIAL	MIN. THICKNESS	REQUIRED CONNECTION @ PANEL EDGES	REQUIRED CONNECTION @ INTERMEDIATE SUPPORTS
CS-WSP	WOOD STRUCTURAL PANEL	3/8"	6d COMMON NAILS @ 6" O.C.	6d COMMON NAILS @ 12" O.C.
GB	GYPSUM BOARD	1/2"	5d COOLER NAILS** @ 7" O.C.	5d COOLER NAILS** @ 7" O.C.
WSP	WOOD STRUCTURAL PANEL	3/8"	6d COMMON NAILS @ 6" O.C.	6d COMMON NAILS @ 12" O.C.
PF	WOOD STRUCTURAL PANEL	7/16"	PER FIGURE R602.10.1	PER FIGURE R602.10.1
**OR EQUIVALENT PER TABLE R1003.5.5				

BRACED WALL NOTES:

1. WALLS SHALL BE DESIGNED IN ACCORDANCE WITH SECTION R602.10 FROM THE 2018 NORTH CAROLINA RESIDENTIAL CODE.
2. WALLS ARE DESIGNED FOR SEISMIC ZONES A-C AND ULTIMATE WIND SPEEDS UP TO 130 MPH.
3. REFER TO ARCHITECTURAL PLAN FOR DOOR/WINDOW OPENING SIZES.
4. BRACING MATERIALS, METHODS AND FASTENERS SHALL BE IN ACCORDANCE WITH TABLE R602.10.1.
5. ALL BRACED WALL PANELS SHALL BE FULL WALL HEIGHT AND SHALL NOT EXCEED 10 FEET FOR ISOLATED PANEL METHOD AND 12 FEET FOR CONTINUOUS SHEATHING METHOD WITHOUT ADDITIONAL ENGINEERING CALCULATIONS.
6. MINIMUM PANEL LENGTH SHALL BE PER TABLE R602.10.1.
7. THE INTERIOR SIDE OF EXTERIOR WALLS AND BOTH SIDES OF INTERIOR WALLS SHALL BE SHEATHED CONTINUOUSLY WITH MINIMUM 1/2" GYPSUM BOARD (UNO).
8. FOR CONTINUOUS SHEATHING METHOD, EXTERIOR WALLS SHALL BE SHEATHED ON ALL SHEATHABLE SURFACES INCLUDING INFILL AREAS BETWEEN BRACED WALL PANELS, ABOVE AND BELOW WALL OPENINGS, AND ON GABLE END WALLS.
9. FLOORS SHALL NOT BE CANTILEVERED MORE THAN 24" BEYOND THE FOUNDATION OR BEARING WALL BELOW WITHOUT ADDITIONAL ENGINEERING CALCULATIONS.
10. A BRACED WALL PANEL SHALL BE LOCATED WITHIN 12 FEET OF EACH END OF A BRACED WALL LINE.
11. THE MAXIMUM EDGE DISTANCE BETWEEN BRACED WALL PANELS SHALL NOT EXCEED 21 FEET.
12. MASONRY OR CONCRETE STEM WALLS WITH A LENGTH OF 48" OR LESS SUPPORTING A BRACED WALL PANEL SHALL BE DESIGNED IN ACCORDANCE WITH FIGURE R602.10.4.3 OF THE 2018 NCRC.
13. BRACED WALL PANEL CONNECTIONS TO FLOOR/CEILING SHALL BE CONSTRUCTED IN ACCORDANCE WITH SECTION R602.10.4.4
14. BRACED WALL PANEL CONNECTIONS TO ROOF SHALL BE CONSTRUCTED IN ACCORDANCE WITH SECTION R602.10.4.5
15. CRIPPLE WALLS AND WALK OUT BASEMENT WALLS SHALL BE DESIGNED IN ACCORDANCE WITH SECTION R602.10.4.6
16. PORTAL WALLS SHALL BE DESIGNED IN ACCORDANCE WITH FIGURE R602.10.1 (UNO)
17. ON SCHEMATIC, SHADED WALLS INDICATE BRACED WALL PANELS.
18. ABBREVIATIONS:

GB = GYPSUM BOARD
CS-XXX = CONT. SHEATHED
PF = PORTAL FRAME
WSP = WOOD STRUCTURAL PANEL
ENG = ENGINEERED SOLUTION
PF-ENG = ENG. PORTAL FRAME

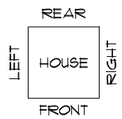

FIRST FLOOR BRACING (FT)		
CONTINUOUS SHEATHING METHOD - OPT DINING		
	REQUIRED	PROVIDED
BWL 1-1	6.2	15.1
BWL 1-2	6.2	16.3
BWL 1-A	6.2	34.0
BWL 1-B	6.2	36.0

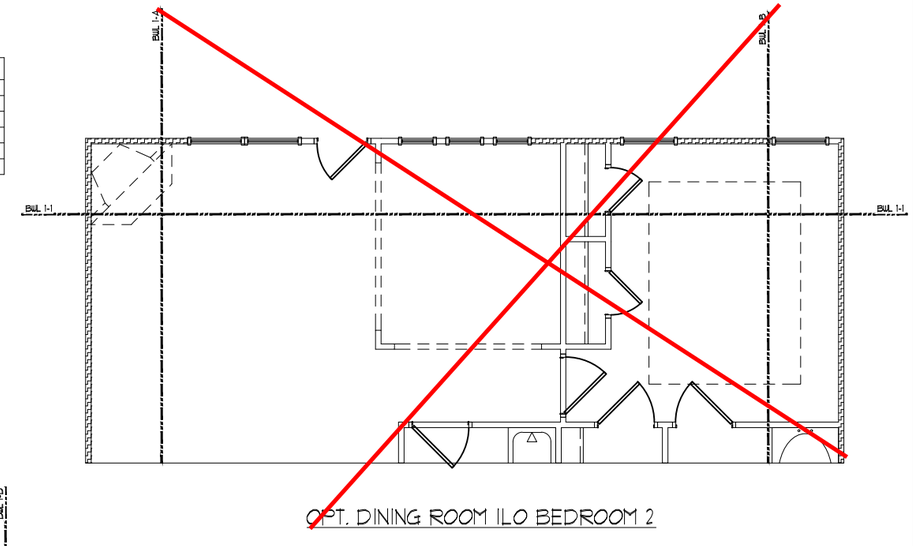

OPT. DINING ROOM ILO BEDROOM 2

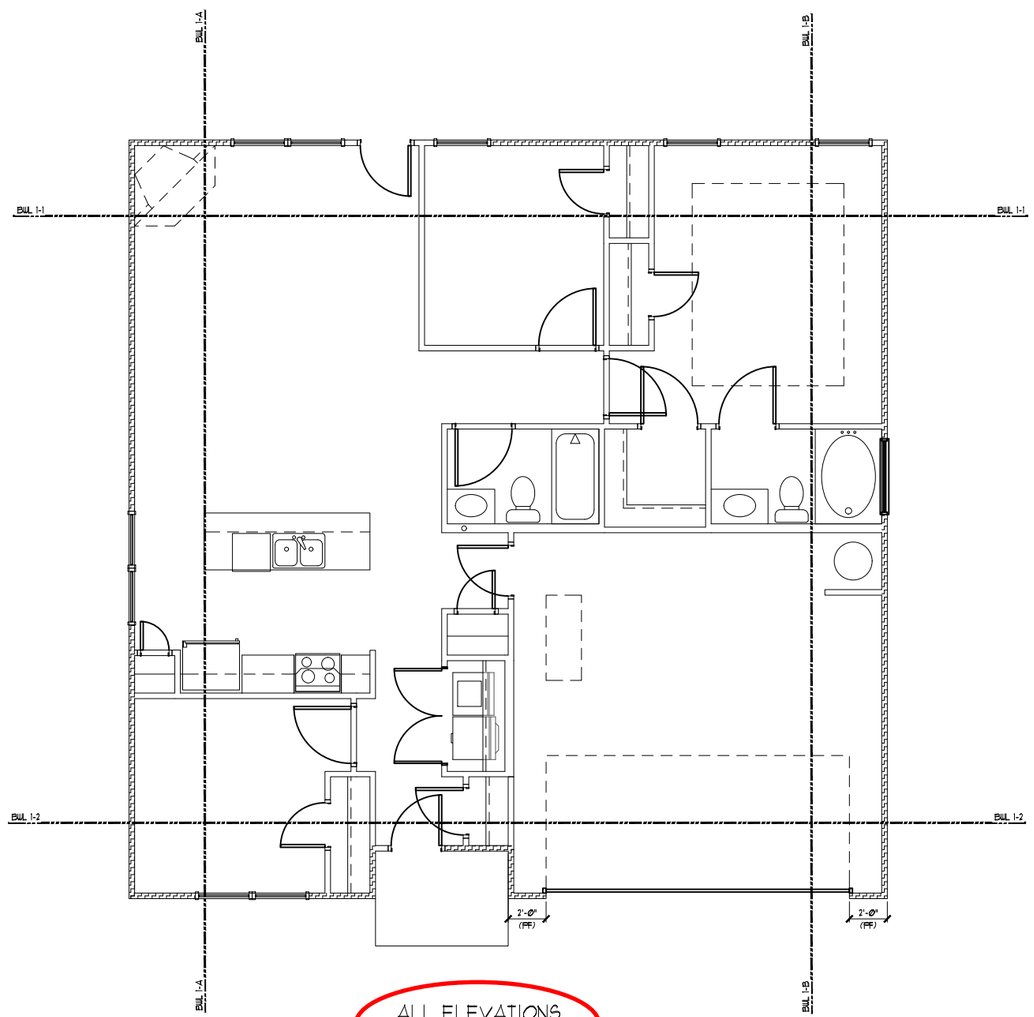

FIRST FLOOR BRACING (FT)		
CONTINUOUS SHEATHING METHOD		
	REQUIRED	PROVIDED
BWL 1-1	6.2	19.5
BWL 1-2	6.2	16.3
BWL 1-A	6.2	34.0
BWL 1-B	6.2	36.0

INSTALL HOLD-DOWNS PER SECTION R602.10.4 AND FIGURE R602.10.3(4) OF THE 2018 NCRC.

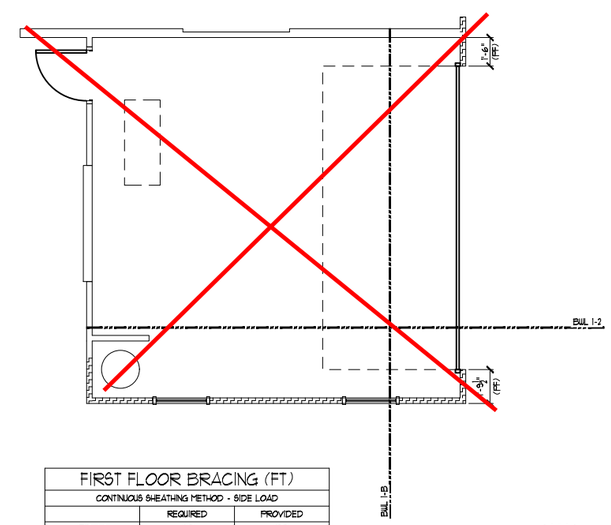

FIRST FLOOR BRACING (FT)		
CONTINUOUS SHEATHING METHOD - SIDE LOAD		
	REQUIRED	PROVIDED
BWL 1-1	6.2	19.5
BWL 1-2	6.2	24.3
BWL 1-A	6.2	34.0
BWL 1-B	6.2	20.7

THESE PLANS ARE DESIGNED IN ACCORDANCE WITH ARCHITECTURAL PLANS PROVIDED BY SMITH DOUGLAS HOMES COMPLETED/REVISED ON 01/24/2020. IT IS THE RESPONSIBILITY OF THE CLIENT TO NOTIFY SUMMIT ENGINEERING, LABORATORY & TESTING, P.C. IF ANY CHANGES ARE MADE TO THE ARCHITECTURAL PLANS PRIOR TO CONSTRUCTION. SUMMIT CANNOT GUARANTEE THE ADEQUACY OF THESE STRUCTURAL PLANS WHEN USED WITH ARCHITECTURAL PLANS DATED DIFFERENTLY THAN THE DATE LISTED ABOVE.

STRUCTURAL MEMBERS ONLY

ENGINEERING SEAL APPLIES ONLY TO STRUCTURAL COMPONENTS ON THIS DOCUMENT, SEAL DOES NOT INCLUDE CONSTRUCTION MEANS, METHODS, TECHNIQUES, SEQUENCES, PROCEDURES OR SAFETY PRECAUTIONS. ANY DEVIATIONS OR DISCREPANCIES ON PLANS ARE TO BE BROUGHT TO THE IMMEDIATE ATTENTION OF SUMMIT ENGINEERING, LABORATORY & TESTING, P.C. FAILURE TO DO SO WILL VOID SUMMIT LIABILITY.

STRUCTURAL ANALYSIS BASED ON 2018 NCRC.

ALL ELEVATIONS
Bracing Option 1

Cedar Pointe
LOT 15

NORTH CAROLINA PROFESSIONAL SEAL 046048 ENGINEER BRIAN C. PHILBRICK, JR.

12/12/

STRUCTURAL MEMBERS ONLY

SUMMIT
ENGINEERING LABORATORY TESTING
3070 HAMMOND BUSINESS PLACE, SUITE 171
RALEIGH, NC 27603
OFFICE: 919.380.9991
FAX: 919.380.9993
WWW.SUMMIT-COMPANIES.COM

NORTH CAROLINA CERTIFICATE OF AUTHORIZATION
SUMMIT Engineering, Laboratory & Testing, Inc. No. F-1454

PROJECT:
FOXCROFT NC RH
First Floor Bracing

CLIENT:
Smith Douglas Homes - Raleigh
2520 Reliance Ave
Apex, NC 27539

DRAWING
DATE: 08/03/2020
SCALE: 1/8"=1'-0"
PROJECT #: 3832360R3
DRAWN BY: NAK
CHECKED BY: BCP

ORIGINAL INFORMATION
PROJECT # 3832184
DATE 12/28/2018

S7.0

REQUIRED BRACED WALL PANEL CONNECTIONS

METHOD	MATERIAL	MIN. THICKNESS	REQUIRED CONNECTION @ PANEL EDGES	REQUIRED CONNECTION @ INTERMEDIATE SUPPORTS
CS-WSP	WOOD STRUCTURAL PANEL	3/8"	6d COMMON NAILS @ 6" O.C.	6d COMMON NAILS @ 12" O.C.
GB	GYPSUM BOARD	1/2"	5d COOLER NAILS** @ 7" O.C.	5d COOLER NAILS** @ 7" O.C.
WSP	WOOD STRUCTURAL PANEL	3/8"	6d COMMON NAILS @ 6" O.C.	6d COMMON NAILS @ 12" O.C.
PF	WOOD STRUCTURAL PANEL	7/16"	PER FIGURE R602.10.1	PER FIGURE R602.10.1

**OR EQUIVALENT PER TABLE R702.3.5

BRACED WALL NOTES:

1. WALLS SHALL BE DESIGNED IN ACCORDANCE WITH SECTION R602.10 FROM THE 2018 NORTH CAROLINA RESIDENTIAL CODE.
2. WALLS ARE DESIGNED FOR SEISMIC ZONES A-C AND ULTIMATE WIND SPEEDS UP TO 130 MPH.
3. REFER TO ARCHITECTURAL PLAN FOR DOOR/WINDOW OPENING SIZES.
4. BRACING MATERIALS, METHODS AND FASTENERS SHALL BE IN ACCORDANCE WITH TABLE R602.10.1.
5. ALL BRACED WALL PANELS SHALL BE FULL WALL HEIGHT AND SHALL NOT EXCEED 10 FEET FOR ISOLATED PANEL METHOD AND 12 FEET FOR CONTINUOUS SHEATHING METHOD WITHOUT ADDITIONAL ENGINEERING CALCULATIONS.
6. MINIMUM PANEL LENGTH SHALL BE PER TABLE R602.10.1.
7. THE INTERIOR SIDE OF EXTERIOR WALLS AND BOTH SIDES OF INTERIOR WALLS SHALL BE SHEATHED CONTINUOUSLY WITH MINIMUM 1/2" GYPSUM BOARD (UNO).
8. FOR CONTINUOUS SHEATHING METHOD, EXTERIOR WALLS SHALL BE SHEATHED ON ALL SHEATHABLE SURFACES INCLUDING INFILL AREAS BETWEEN BRACED WALL PANELS, ABOVE AND BELOW WALL OPENINGS, AND ON GABLE END WALLS.
9. FLOORS SHALL NOT BE CANTILEVERED MORE THAN 24" BEYOND THE FOUNDATION OR BEARING WALL BELOW WITHOUT ADDITIONAL ENGINEERING CALCULATIONS.
10. A BRACED WALL PANEL SHALL BE LOCATED WITHIN 12 FEET OF EACH END OF A BRACED WALL LINE.
11. THE MAXIMUM EDGE DISTANCE BETWEEN BRACED WALL PANELS SHALL NOT EXCEED 21 FEET.
12. MASONRY OR CONCRETE STEM WALLS WITH A LENGTH OF 48" OR LESS SUPPORTING A BRACED WALL PANEL SHALL BE DESIGNED IN ACCORDANCE WITH FIGURE R602.10.4.3 OF THE 2018 NCRC.
13. BRACED WALL PANEL CONNECTIONS TO FLOOR/CEILING SHALL BE CONSTRUCTED IN ACCORDANCE WITH SECTION R602.10.4.4
14. BRACED WALL PANEL CONNECTIONS TO ROOF SHALL BE CONSTRUCTED IN ACCORDANCE WITH SECTION R602.10.4.5
15. CRIPPLE WALLS AND WALK OUT BASEMENT WALLS SHALL BE DESIGNED IN ACCORDANCE WITH SECTION R602.10.4.6
16. PORTAL WALLS SHALL BE DESIGNED IN ACCORDANCE WITH FIGURE R602.10.1 (UNO)
17. ON SCHEMATIC, SHADED WALLS INDICATE BRACED WALL PANELS.
18. ABBREVIATIONS:

GB = GYPSUM BOARD — WSP = WOOD STRUCTURAL PANEL
CS-XXX = CONT. SHEATHED — ENG = ENGINEERED SOLUTION
PF = PORTAL FRAME — PF-ENG = ENG. PORTAL FRAME

FIRST FLOOR BRACING (FT)

CONTINUOUS SHEATHING METHOD

	REQUIRED	PROVIDED
BWL 1-1	6.2	14.9
BWL 1-2	6.2	13.0
BWL 1-A	6.2	14.7
BWL 1-B	6.2	15.0

INSTALL HOLD-DOWNS PER SECTION R602.10.4 AND FIGURE R602.10.3(4) OF THE 2018 NCRC.

THESE PLANS ARE DESIGNED IN ACCORDANCE WITH ARCHITECTURAL PLANS PROVIDED BY SMITH DOUGLAS HOMES COMPLETED/REVISED ON 01/24/2020. IT IS THE RESPONSIBILITY OF THE CLIENT TO NOTIFY SUMMIT ENGINEERING, LABORATORY & TESTING, P.C. IF ANY CHANGES ARE MADE TO THE ARCHITECTURAL PLANS PRIOR TO CONSTRUCTION. SUMMIT CANNOT GUARANTEE THE ADEQUACY OF THESE STRUCTURAL PLANS WHEN USED WITH ARCHITECTURAL PLANS DATED DIFFERENTLY THAN THE DATE LISTED ABOVE.

STRUCTURAL MEMBERS ONLY

ENGINEERING SEAL APPLIES ONLY TO STRUCTURAL COMPONENTS ON THIS DOCUMENT, SEAL DOES NOT INCLUDE CONSTRUCTION MEANS, METHODS, TECHNIQUES, SEQUENCES, PROCEDURES OR SAFETY PRECAUTIONS. ANY DEVIATIONS OR DISCREPANCIES ON PLANS ARE TO BE BROUGHT TO THE IMMEDIATE ATTENTION OF SUMMIT ENGINEERING, LABORATORY & TESTING, P.C. FAILURE TO DO SO WILL VOID SUMMIT LIABILITY.

STRUCTURAL ANALYSIS BASED ON 2018 NCRC.

INSTALL HOLD-DOWNS PER SECTION R602.10.4 AND FIGURE R602.10.3(4) OF THE 2018 NCRC.

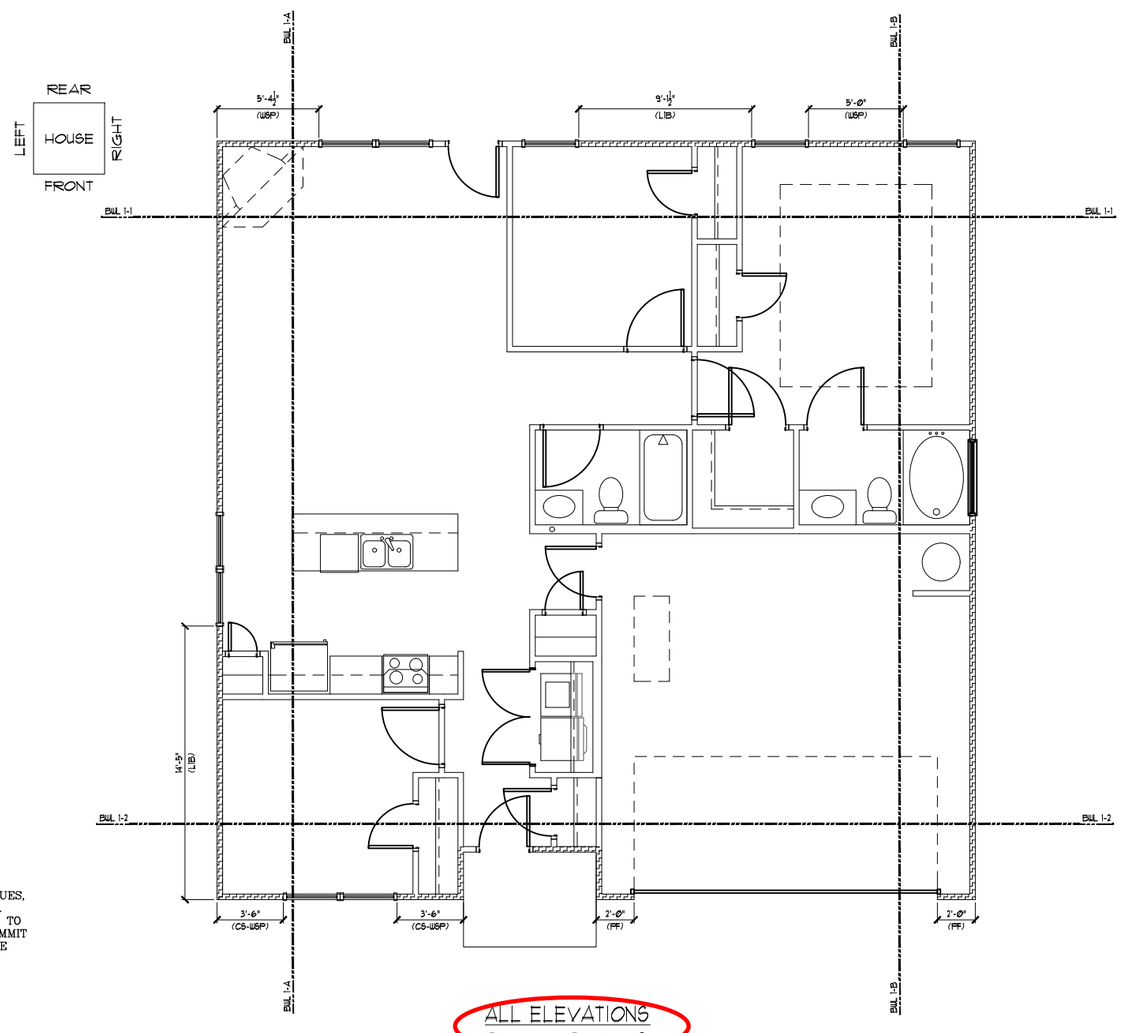

ALL ELEVATIONS
Bracing Option 2

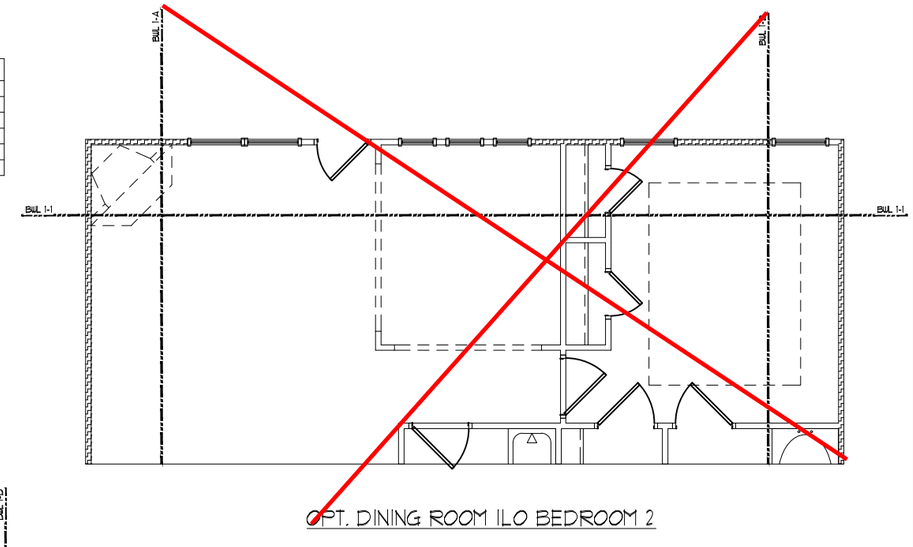

OPT. DINING ROOM ILO BEDROOM 2

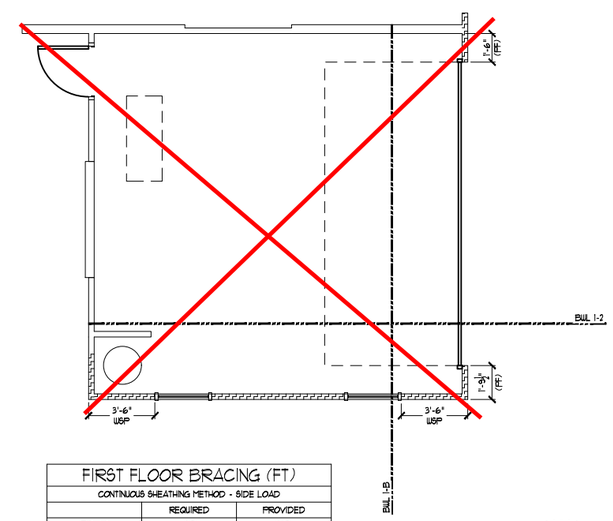

FIRST FLOOR BRACING (FT)

CONTINUOUS SHEATHING METHOD - SIDE LOAD

	REQUIRED	PROVIDED
BWL 1-1	6.2	14.9
BWL 1-2	6.2	14.0
BWL 1-A	6.2	14.7
BWL 1-B	6.2	12.4

Cedar Pointe
LOT 15

NORTH CAROLINA PROFESSIONAL SEAL 046048 ENGINEER BRIAN C. PHILBRICK, JR.
12/12

STRUCTURAL MEMBERS ONLY

SUMMIT
ENGINEERING LABORATORY TESTING
3070 HAMMOND BUSINESS PLACE, SUITE 171
RALEIGH, NC 27603
OFFICE: 919.380.9991
FAX: 919.380.9993
WWW.SUMMIT-COMPANIES.COM

NORTH CAROLINA CERTIFICATE OF AUTHORIZATION
SUMMIT Engineering, Laboratory & Testing, Inc.
No. F-1454

PROJECT:
FOXCROFT NC RH
First Floor Bracing

CLIENT:
Smith Douglas Homes - Raleigh
2520 Reliance Ave
Apex, NC 27539

DRAWING
DATE: 08/03/2020
SCALE: 1/8"=1'-0"
PROJECT #: 3832360R3
DRAWN BY: NAK
CHECKED BY: BCP

ORIGINAL INFORMATION
PROJECT # 3832184 — DATE 12/28/2018

S7.1

GENERAL STRUCTURAL NOTES:

1. The design professional whose seal appears on these drawings is the structural engineer of record (SER) for this project. The SER bears the responsibility of the primary structural elements and the performance of this structure. No other party may revise, alter, or delete any structural aspects of these construction documents without written permission of SUMMIT Engineering, Laboratory & Testing, Inc. (SUMMIT) or the SER. For the purposes of these construction documents the SER and SUMMIT shall be considered the same entity.
2. The structure is only stable in its completed form. The contractor shall provide all required temporary bracing during construction to stabilize the structure.
3. The SER is not responsible for construction sequences, methods, or techniques in connection with the construction of this structure. The SER will not be held responsible for the contractor's failure to conform to the contract documents, should any non-conformities occur.
4. Any structural elements or details not fully developed on the construction drawings shall be completed under the direction of a licensed professional engineer. These shop drawings shall be submitted to SUMMIT for review before any construction begins. The shop drawings will be reviewed for overall compliance as it relates to the structural design of this project. Verification of the shop drawings for dimensions, or for actual field conditions, is not the responsibility of the SER or SUMMIT.
5. Verification of assumed field conditions is not the responsibility of the SER. The contractor shall verify the field conditions for accuracy and report any discrepancies to SUMMIT before construction begins.
6. The SER is not responsible for any secondary structural elements or non-structural elements, except for the elements specifically noted on the structural drawings.
7. This structure and all construction shall conform to all applicable sections of the international residential code.
8. This structure and all construction shall conform to all applicable sections of the 2018 North Carolina Residential Code (NCRC) and any local codes or restrictions

FOUNDATIONS:

1. Foundations shall be constructed in accordance with chapter 4 of the 2018 NC Residential Building Code (Special consideration shall be given to Chapter 45 in wind zones above 130mph)
2. Footing sizes based on a presumptive soil bearing capacity of 2000 PSF. Contractor is solely responsible for verifying the suitability of the site soil conditions at the time of construction
3. Maximum depth of unbalanced fill against masonry walls to be as specified in section R404.1 of the 2018 NCRC
4. The structural engineer has not performed a subsurface investigation. Verification of this assumed value is the responsibility of the owner or the contractor. Should any adverse soil condition be encountered the SER must be contacted before proceeding.
5. The bottom of all footings shall extend below the frost line for the region in which the structure is to be constructed. However, the bottom of all footings shall be a minimum of 12" below grade.
6. Any fill shall be placed under the direction or recommendation of a licensed professional engineer. The resulting soil shall be compacted to a minimum of 95% maximum dry density.
7. Excavations of footings shall be lined temporarily with a 6 mil polyethylene membrane if placement of concrete does not occur within 24 hours of excavation.
8. No concrete shall be placed against any subgrade containing water, ice, frost, or loose material.
9. Each crawl space pier shall bear in the middle third of its respective footing and each girder shall bearing in the middle third of the piers. Pilasters to be bonded to perimeter foundation wall
10. Crawl spaced to be graded level and clear of all debris
11. Provide foundation waterproofing and drain with positive slope to outlet as required by site conditions
12. Energy efficiency compliance and insulation of the structure to be in accordance with chapter 11 of the 2018 NCRC

CONCRETE:

1. Concrete shall have a normal weight aggregate and a minimum compressive strength (f'c) at 28 days of 3000 psi, unless otherwise noted on the plan.
2. Concrete shall be proportioned, mixed, and placed in accordance with the latest editions of ACI 318: "Building Code Requirements for Reinforced Concrete" and ACI 301: "Specifications for Structural Concrete for Buildings".
3. Air entrained concrete must be used for all structural elements exposed to freeze/thaw cycles and deicing chemicals. Air entrainment amounts (in percent) shall be within −1% to +2% of target values as follows:
   3.1. Footings: 5%
   3.2. Exterior Slabs: 5%
4. No admixtures shall be added to any structural concrete without written permission of the SER
5. Concrete slabs-on-grade shall be constructed in accordance with ACI 302.1R-96: "Guide for Concrete Slab and Slab Construction".
6. The concrete slab-on-grade has been designed using a subgrade modulus of k=250 pci and a design loading of 200 psf. The SER is not responsible for differential settlement, slab cracking or other future defects resulting from unreported conditions not in accordance with the above assumptions.
7. Control or saw cut joints shall be spaced in interior slabs-on-grade at a maximum of 15'-0" O.C. and in exterior slabs-on-grade at a maximum of 10'-0" unless otherwise noted.
8. Control or saw cut joints shall be produced using conventional process within 4 to 12 hours after the slab has been finished
9. Reinforcing steel may not extend through a control joint. Reinforcing steel may extend through a saw cut joint.
10. All welded wire fabric (W.W.F.) for concrete slabs-on-grade shall be placed at mid-depth of slab. The W.W.F. shall be securely supported during the concrete pour. Fibermesh may be used in lieu of W.W.F.

CONCRETE REINFORCEMENT:

1. Fibrous concrete reinforcement, or fibermesh, specified in concrete slabs-on-grade may be used for control of cracking due to shrinkage and thermal expansion/contraction, lowered water migration, an increase in impact capacity, increased abrasion resistance, and residual strength.
2. Fibermesh reinforcing to be 100% virgin polypropylene fibers containing no reprocessed olefin materials and specifically manufactured for use as concrete secondary reinforcement.
3. Application of fibermesh per cubic yard of concrete shall equal a minimum of 0.1% by volume (1.5 pounds per cubic yard)
4. Fibermesh shall comply with ASTM C1116, any local building code requirements, and shall meet or exceed the current industry standard.
5. Steel Reinforcing bars shall be new billet steel conforming to ASTM A615, grade 60.
6. Detailing, fabrication, and placement of reinforcing steel shall be in accordance with the latest edition of ACI 315: "Manual of Standard Practice for Detailing Concrete Structures"
7. Horizontal footing and wall reinforcement shall be continuous and shall have 90° bends, or corner bars with the same size/spacing as the horizontal reinforcement with a class B tension splice.
8. Lap reinforcement as required, a minimum of 40 bar diameters for tension or compression unless otherwise noted. Splices in masonry shall be a minimum of 48 bar diameters.
9. Where reinforcing dowels are required , they shall be equivalent in size and spacing to the vertical reinforcement. The dowel shall extend 48 bar diameters vertically and 20 bar diameters into the footing.
10. Where reinforcing steel is required vertically, dowels shall be provided unless otherwise noted.

WOOD FRAMING:

1. Solid sawn wood framing members shall conform to the specifications listed in the latest edition of the "National Design Specification for Wood Construction" (NDS). Unless otherwise noted, all wood framing members are designed to be Spruce-Pine-Fir (SPF) #2.
2. LVL or PSL engineered wood shall have the following minimum design values:
   2.1. E = 1,900,000 psi
   2.2. Fb = 2600 psi
   2.3. Fv = 285 psi
   2.4. Fc = 700 psi
3. Wood in contact with concrete, masonry, or earth shall be pressure treated in accordance with AWPA standard C-15. All other moisture exposed wood shall be treated in accordance with AWPA standard C-2
4. Nails shall be common wire nails unless otherwise noted.
5. Lag screws shall conform to ANSI/ASME standard B18.2.1-1981. Lead holes for lag screws shall be in accordance with NDS specifications.
6. All beams shall have full bearing on supporting framing members unless otherwise noted.
7. Exterior and load bearing stud walls are to be 2x4 SPF#2 @16" O.C. unless otherwise noted. Studs shall be continuous from the sole plate to the double top plate. Studs shall only be discontinuous at headers for window/door openings. A minimum of one king stud shall be placed at each end of the header. King studs shall be continuous.
8. Individual studs forming a column shall be attached with one 10d nail @6" O.C. staggered. The stud column shall be continuous to the foundation or beam. The column shall be fully blocked at all floor levels to ensure proper load transfer.
9. Multi-ply beams shall have each ply attached wth (3)10d nails @ 24" O.C.
10. Flitch beams and four and five ply beams shall be bolted together with (2) rows of 1/2" dia. through bolts staggered @24" O.C. w/ 2" edge distance and (2) bolts located at 6" from each end, unless noted otherwise.

WOOD TRUSSES:

1. The wood truss manufacturer/fabricator is responsible for the design of the wood trusses. Submit sealed shop drawings and supporting calculations to the SER for review prior to fabrication. The SER shall have a minimum of five (5) days for review. The review by the SER shall review for overall compliance with the design documents. The SER shall assume no responsibility for the correctness for the structural design for the wood trusses.
2. The wood trusses shall be designed for all required loadings as specified in the local building code, the ASCE Standard "Minimum Design Loads for Buildings and Other Structures." (ASCE 7-10), and the loading requirements shown on these specifications. The truss drawings shall be coordinated with all other construction documents and provisions provided for loads shown on these drawings including but not limited to HVAC equipment, piping, and architectural fixtures attached to the trusses.
3. The trusses shall be designed, fabricated, and erected in accordance with the latest edition of the "National Design Specification for Wood Construction." (NDS) and "Design Specification for Metal Plate Connected Wood Trusses."
4. The truss manufacturer shall provide adequate bracing information in accordance with "Commentary and Recommendations for Handling, Installing, and Bracing Metal Plate Connected Wood Trusses" (HIB-91). This bracing, both temporary and permanent, shall be shown on the shop drawings. Also, the shop drawings shall show the required attachments for the trusses.
5. Any chords or truss webs shown on these drawings have been shown as a reference only. The final design of the trusses shall be per the manufacturer.

WOOD STRUCTURAL PANELS:

1. Fabrication and placement of structural wood sheathing shall be in accordance with the APA Design/Construction Guide "Residential and Commercial," and all other applicable APA standards.
2. All structurally required wood sheathing shall bear the mark of the APA.
3. Wood wall sheathing shall comply with the requirements of local building codes for the appropriate state as indicated on these drawings. Refer to wall bracing notes in plan set for more information. Sheathing shall be applied with the long direction perpendicular to framing, unless noted otherwise.
4. Roof sheathing shall be APA rated sheathing exposure 1 or 2. Roof sheathing shall be continuous over two supports and attached to its supporting roof framing with (1)-8d CC nail at 6"o/c at panel edges and at 12"o/c in panel field unless otherwise noted on the plans. Sheathing shall be applied with the long direction perpendicular to framing. Sheathing shall have a span rating consistent with the framing spacing. Use suitable edge support by use of plywood clips or lumber blocking unless otherwise noted. Panel end joints shall occur over framing. Apply building paper over the sheathing as required by the state Building Code.
5. Wood floor sheathing shall be APA rated sheathing exposure 1 or 2. Attach sheathing to its supporting framing with (1)-8d CC ringshank nail at 6"o/c at panel edges and at 12"o/c in panel field unless otherwise noted on the plans. Sheathing shall be applied perpendicular to framing. Sheathing shall have a span rating consistent with the framing spacing. Use suitable edge support by use of T&G plywood or lumber blocking unless otherwise noted. Panel end joints shall occur over framing. Apply building paper over the sheathing as required by the state Building Code.
6. Sheathing shall have a 1/8" gap at panel ends and edges as recommended in accordance with the APA.

STRUCTURAL FIBERBOARD PANELS:

1. Fabrication and placement of structural fiberboard sheathing shall be in accordance with the applicable AFA standards.
2. Fiberboard wall sheathing shall comply with the requirements of local building codes for the appropriate state as indicated on these drawings. Refer to wall bracing notes in plan set for more information.
3. Sheathing shall have a 1/8" gap at panel ends and edges are recommended in accordance with the AFA.

EXTERIOR WOOD FRAMED DECKS:

1. Decks are to be framed in accordance with local building codes and as referenced on the structural plans, either through code references or construction details.

STRUCTURAL STEEL:

1. Structural steel shall be fabricated and erected in accordance with the American Institute of Steel Construction "Code of Standard Practice for Steel Buildings and Bridges" and of the manual of Steel Construction "Load Resistance Factor Design" latest editions.
2. All steel shall have a minimum yield stress (Fy) of 36 ksi unless otherwise noted.
3. Welding shall conform to the latest edition of the American Welding Society's Structural Welding Code AWS D1.1. Electrodes for shopt and field welding shall be class E70XX. All welding shall be performed by a certified welder per the above standards.

NORTH CAROLINA PROFESSIONAL SEAL 046048 ENGINEER BRIAN C. PHILBRICK, JR.

6/1/21

STRUCTURAL MEMBERS ONLY

SUMMIT
ENGINEERING LABORATORY TESTING
3070 HAMMOND BUSINESS PLACE,
SUITE 171, RALEIGH, NC 27603
OFFICE: 919.380.9991
FAX: 919.380.9993
WWW.SUMMIT-COMPANIES.COM

NORTH CAROLINA CERTIFICATE OF AUTHORIZATION
SUMMIT Engineering, Laboratory & Testing, Inc.
No. F-1454

PROJECT
Standard Details
Notes and Specifications

CLIENT
Smith Douglas Homes
110 Village Trail, Suite 215
Woodstock, GA 30188

CURRENT DRAWING
DATE: 4/29/2021
SCALE: NTS
PROJECT #: 3832-R2
DRAWN BY: HDK
CHECKED BY: BCP

ORIGINAL DRAWING

NO.	DATE	PROJECT #
0	1/7/16	3832

REFER TO COVER SHEET FOR A COMPLETE LIST OF REVISIONS

SHEET
CS2

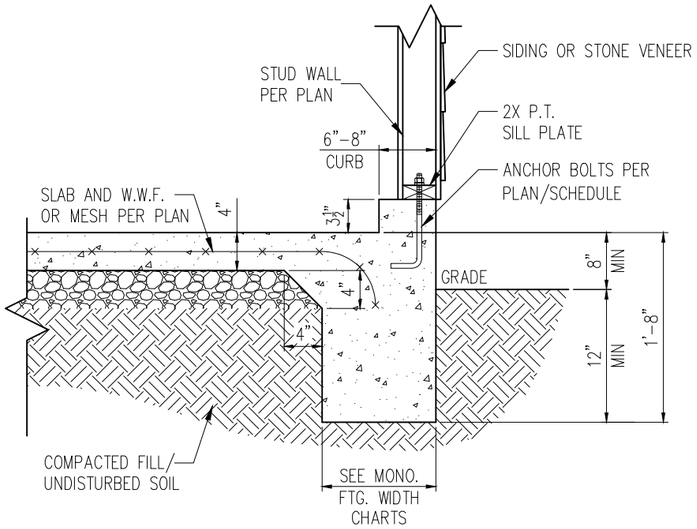

STANDARD – SIDING/STONE

1 D1m TYP. GARAGE CURB DETAIL
3/4" = 1'-0"

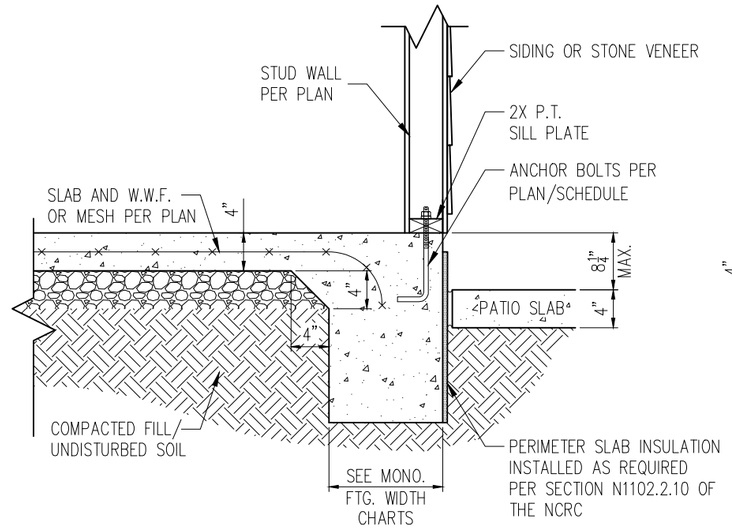

STANDARD – SIDING/STONE

2 D1m PATIO SLAB DETAIL
3/4" = 1'-0"

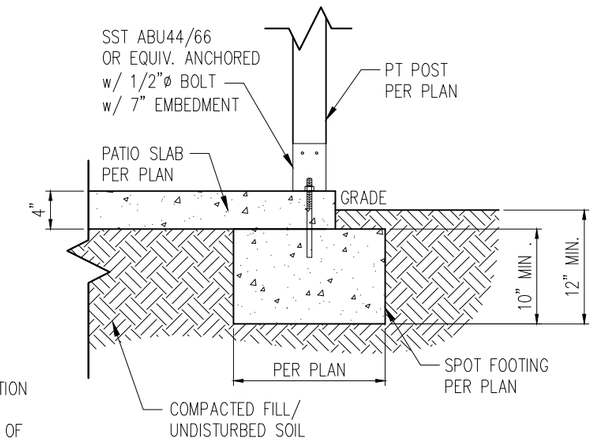

2A D1m COVERED PATIO DETAIL
3/4" = 1'-0"

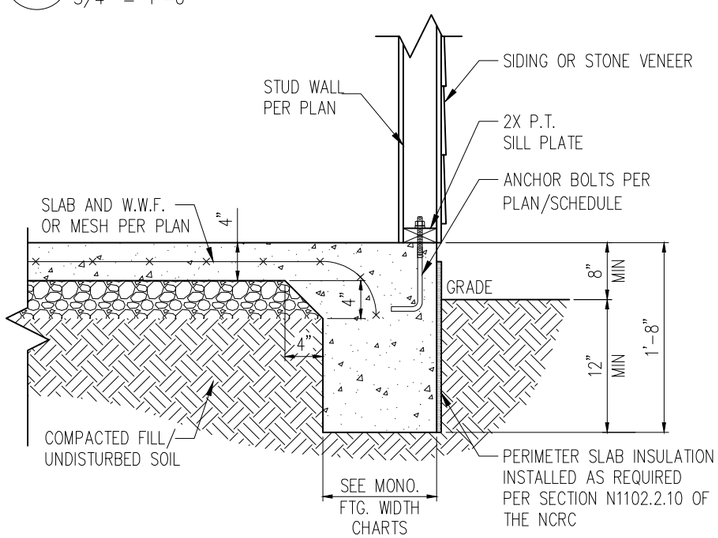

STANDARD – SIDING/STONE

3 D1m TYP. SLAB DETAIL
3/4" = 1'-0"

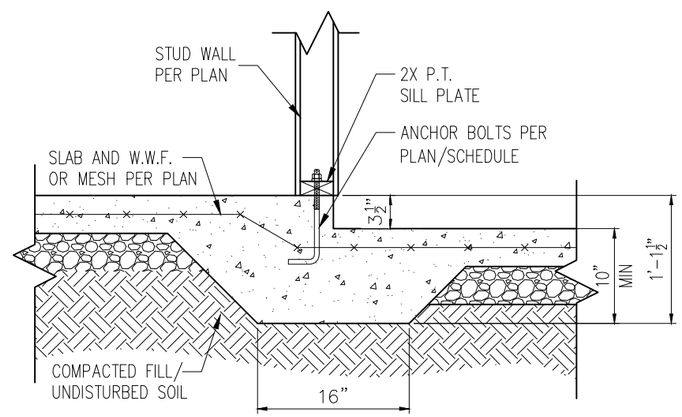

4 D1m STEP IN GARAGE
3/4" = 1'-0"

NOTES:
1. REFER TO GENERAL NOTES & SPECIFICATIONS ON SHEET CS2 FOR ADDITIONAL INFORMATION.
2. PROVIDE 6 MIL VAPOR BARRIER UNDER ALL SLABS-ON-GRADE.
3. SEE ARCH. DWGS. FOR ALL TOP OF THE SLAB ELEVATIONS, SLOPES AND DEPRESSIONS.

WALL ANCHOR SCHEDULE

TYPE OF ANCHOR	MIN. CONC. EMBEDMENT	SPACING EMBEDMENT	INTERIOR WALL	EXTERIOR WALL
1/2"ø A307 BOLTS w/ STD. 90° BEND	7"	6'-0"	YES	YES
SST – MAS	4"	5'-0"	NO	YES
HILTI KWIK BOLT KBI 1/2-2-3/4	2-1/4"	6'-0"	YES	NO
1/2"ø HILTI THREADED ROD w/ HIT HY150 ADHESIVE	7"	6'-0"	YES	YES

NOTE: INSTALL ALL ANCHORS 12" MAX. FROM ALL BOTTOM PLATE ENDS AND JOINTS.

MONOLITHIC FOOTING WIDTH

# OF STORIES	WIDTH BASED ON SOIL BEARING CAPACITY		
	1500 PSF	2000 PSF	2500 PSF
1 STORY – STD.	16"	16"	16"
1 STORY – BRICK VENEER	21"*	21"*	21"*
2 STORY – STD.	20"	16"	16"
2 STORY – BRICK VENEER	25"*	21"*	21"*

*5" BRICK LEDGE HAS BEEN ADDED TO THE MONOLITHIC FOOTING WIDTH FOR BRICK SUPPORT

NORTH CAROLINA PROFESSIONAL SEAL 046048 ENGINEER BRIAN C. PHILBRICK, JR.
6/1/21

STRUCTURAL MEMBERS ONLY

SUMMIT
ENGINEERING LABORATORY TESTING
3070 HAMMOND BUSINESS PLACE, SUITE 171, RALEIGH, NC 27603
OFFICE: 919.380.9991
FAX: 919.380.9993
WWW.SUMMIT-COMPANIES.COM

NORTH CAROLINA CERTIFICATE OF AUTHORIZATION
SUMMIT Engineering, Laboratory & Testing, Inc.
No. F-1454

PROJECT
Standard Details
Monolithic Slab Details

CLIENT
Smith Douglas Homes
110 Village Trail, Suite 215
Woodstock, GA 30188

CURRENT DRAWING
DATE: 4/29/2021
SCALE: NTS
PROJECT #: 3832-R2
DRAWN BY: HDK
CHECKED BY: BCP

ORIGINAL DRAWING

NO.	DATE	PROJECT #
0	1/7/16	3832

REFER TO COVER SHEET FOR A COMPLETE LIST OF REVISIONS

SHEET
D1m

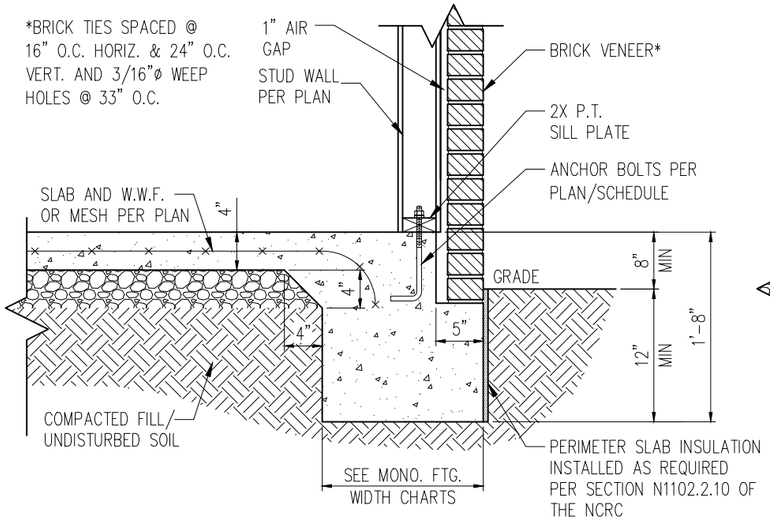

STANDARD – BRICK

1 D2m TYP. SLAB DETAIL W/ BRICK VENEER
3/4" = 1'-0"

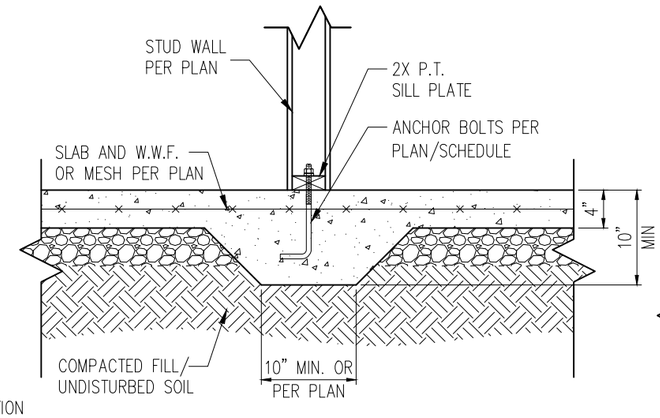

3 D2m TYP. THICKENED SLAB DETAIL
3/4" = 1'-0"

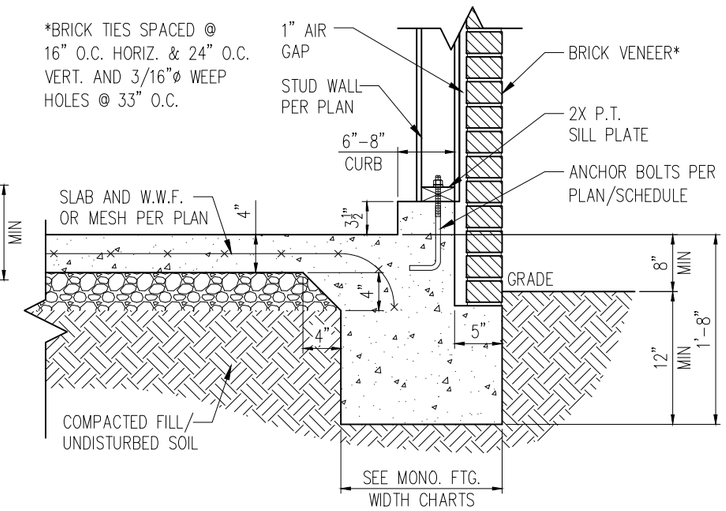

STANDARD – BRICK

5 D2m TYP. GARAGE CURB DETAIL W/ BRICK VENEER
3/4" = 1'-0"

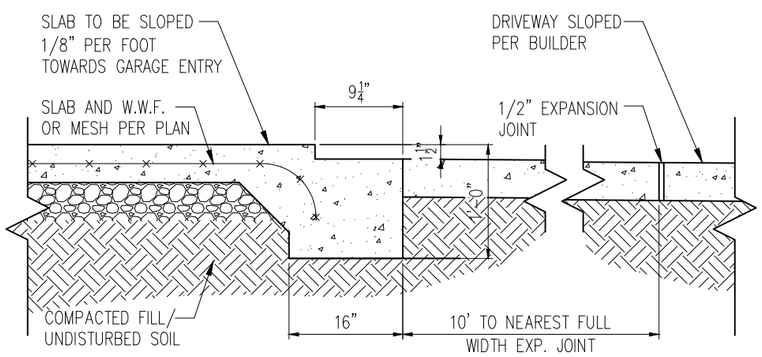

2 D2m SLAB AT GARAGE DOOR
3/4" = 1'-0"

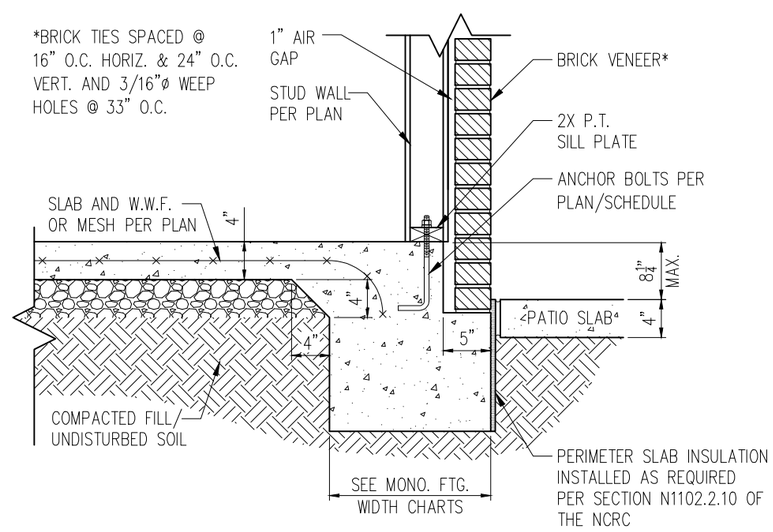

STANDARD – BRICK

4 D2m PATIO SLAB DETAIL W/ BRICK VENEER
3/4" = 1'-0"

NOTES:
1. REFER TO GENERAL NOTES & SPECIFICATIONS ON SHEET CS2 FOR ADDITIONAL INFORMATION.
2. PROVIDE 6 MIL VAPOR BARRIER UNDER ALL SLABS-ON-GRADE.
3. SEE ARCH. DWGS. FOR ALL TOP OF THE SLAB ELEVATIONS, SLOPES AND DEPRESSIONS.

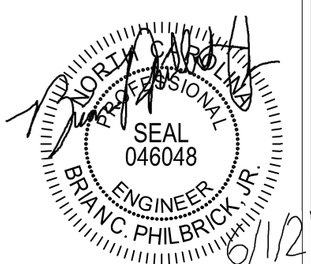

STRUCTURAL MEMBERS ONLY

SUMMIT
ENGINEERING LABORATORY TESTING
3070 HAMMOND BUSINESS PLACE, SUITE 171, RALEIGH, NC 27603
OFFICE: 919.380.9991
FAX: 919.380.9993
WWW.SUMMIT-COMPANIES.COM

NORTH CAROLINA CERTIFICATE OF AUTHORIZATION
SUMMIT Engineering, Laboratory & Testing, Inc.
No. F-1454

PROJECT
Standard Details
Monolithic Slab Details

CLIENT
Smith Douglas Homes
110 Village Trail, Suite 215
Woodstock, GA 30188

CURRENT DRAWING
DATE: 4/29/2021
SCALE: NTS
PROJECT #: 3832-R2
DRAWN BY: HDK
CHECKED BY: BCP

ORIGINAL DRAWING

NO.	DATE	PROJECT #
0	1/7/16	3832

REFER TO COVER SHEET FOR A COMPLETE LIST OF REVISIONS

SHEET
D2m

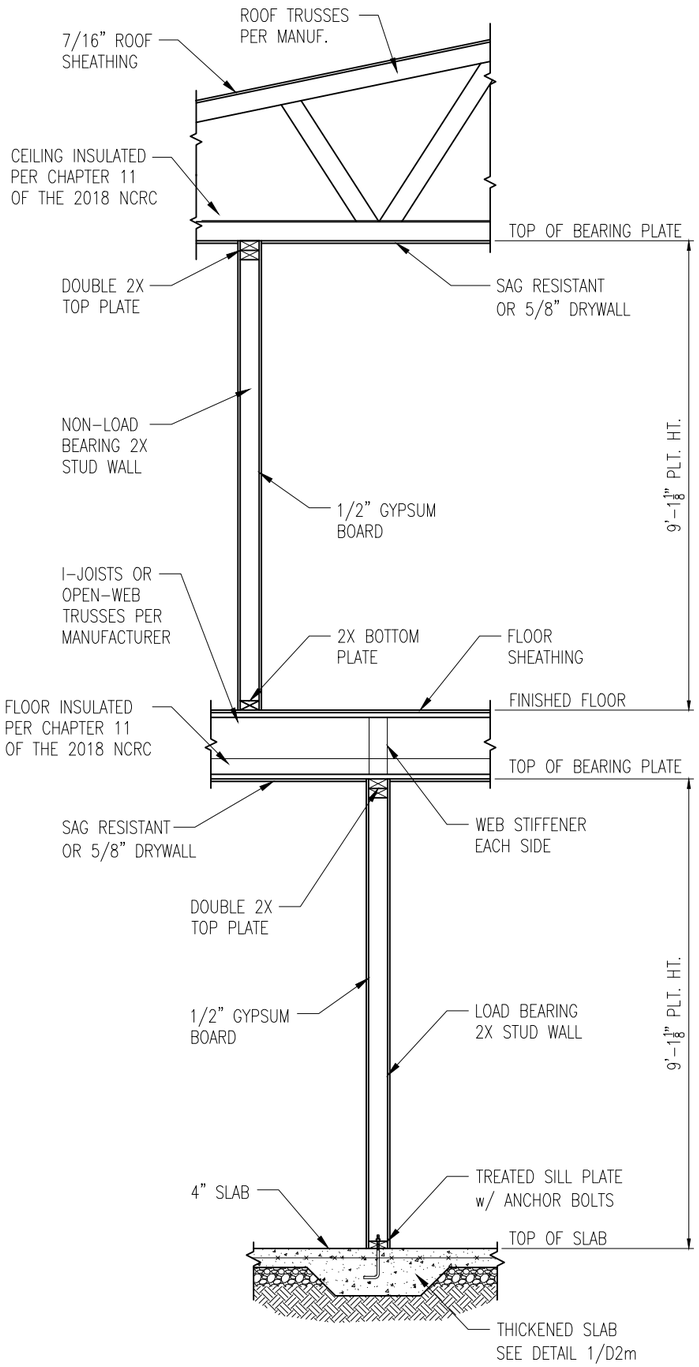

1 D3m TYP. INTERIOR LOAD BEARING WALL SECTION

3/4" = 1'-0"

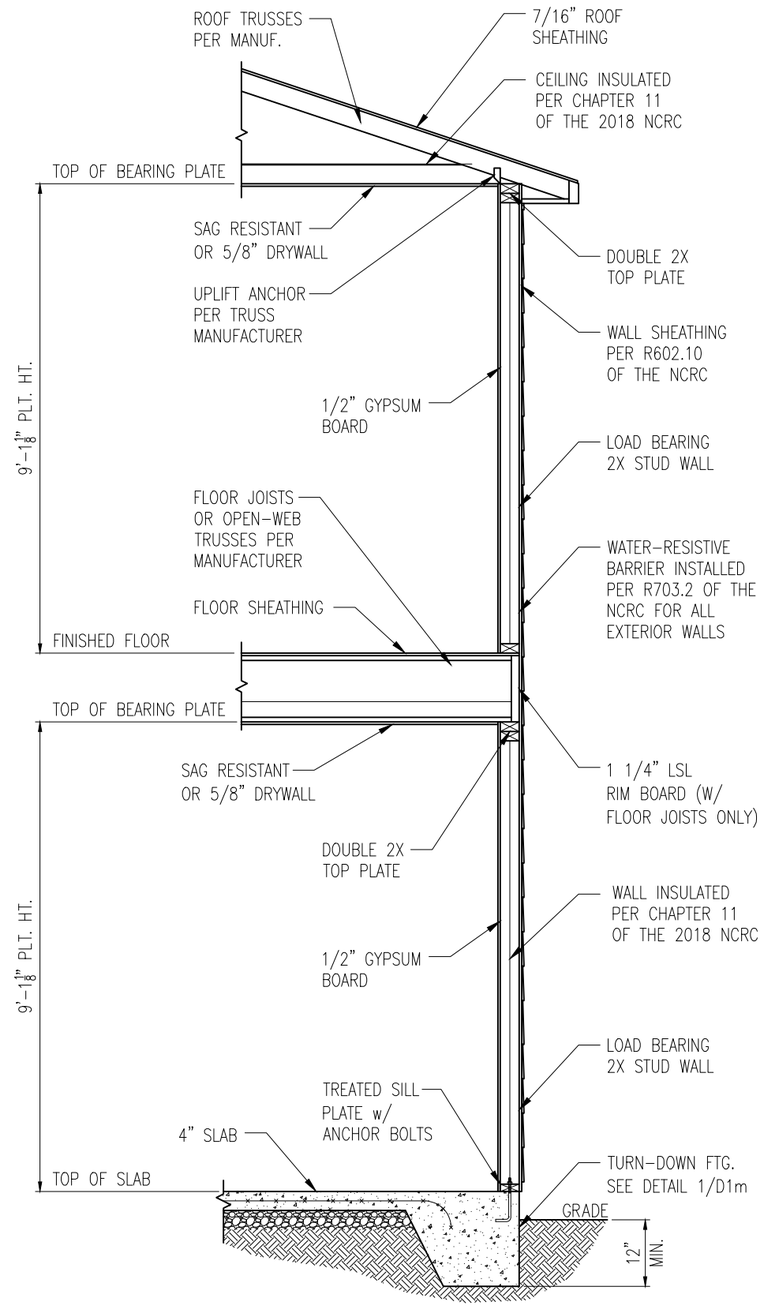

2 D3m TYP. EXTERIOR LOAD BEARING WALL SECTION

3/4" = 1'-0"

-SIMILAR w/ BRICK AND STONE
-BRICK TIES SPACED @ 16" O.C. HORIZ. & 24" O.C. VERT.
-MIN. 3/16"ø WEEP HOLES @ 33" O.C.

NOTES:

1. REFER TO GENERAL NOTES & SPECIFICATIONS ON SHEET CS2 FOR ADDITIONAL INFORMATION.
2. PROVIDE 6 MIL VAPOR BARRIER UNDER ALL SLABS-ON-GRADE.
3. SEE ARCH. DWGS. FOR ALL TOP OF THE SLAB ELEVATIONS, SLOPES AND DEPRESSIONS.

NORTH CAROLINA PROFESSIONAL SEAL 046048 ENGINEER BRIAN C. PHILBRICK, JR.

6/1/21

STRUCTURAL MEMBERS ONLY

SUMMIT
ENGINEERING LABORATORY TESTING
3070 HAMMOND BUSINESS PLACE,
SUITE 171, RALEIGH, NC 27603
OFFICE: 919.380.9991
FAX: 919.380.9993
WWW.SUMMIT-COMPANIES.COM

NORTH CAROLINA CERTIFICATE OF AUTHORIZATION
SUMMIT Engineering, Laboratory & Testing, Inc.
No. F-1454

PROJECT
Standard Details
Monolithic Slab Details

CLIENT
Smith Douglas Homes
110 Village Trail, Suite 215
Woodstock, GA 30188

CURRENT DRAWING
DATE: 4/29/2021
SCALE: NTS
PROJECT #: 3832-R2
DRAWN BY: HDK
CHECKED BY: BCP

ORIGINAL DRAWING

NO.	DATE	PROJECT #
0	1/7/16	3832

REFER TO COVER SHEET FOR A COMPLETE LIST OF REVISIONS

SHEET
D3m

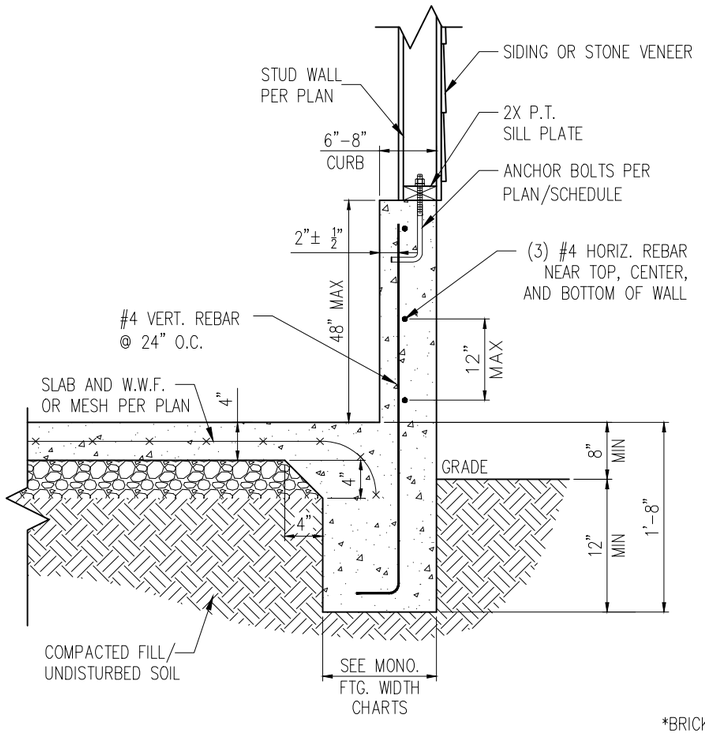

STANDARD – SIDING/STONE

1 D4m EXTENDED GARAGE CURB DETAIL

NTS

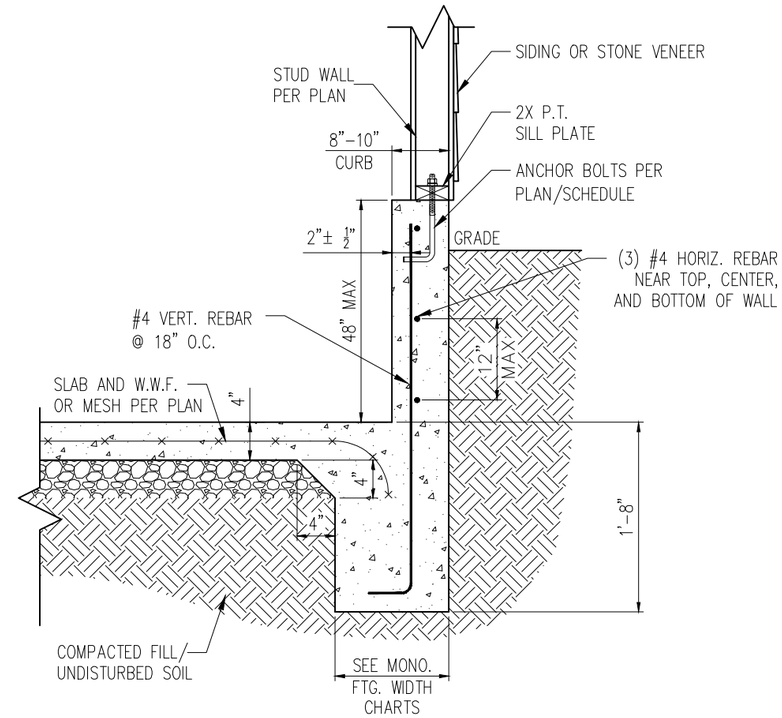

STANDARD – SIDING/STONE

2 D4m EXTENDED GARAGE CURB DETAIL W/ UNBALANCED FILL

NTS

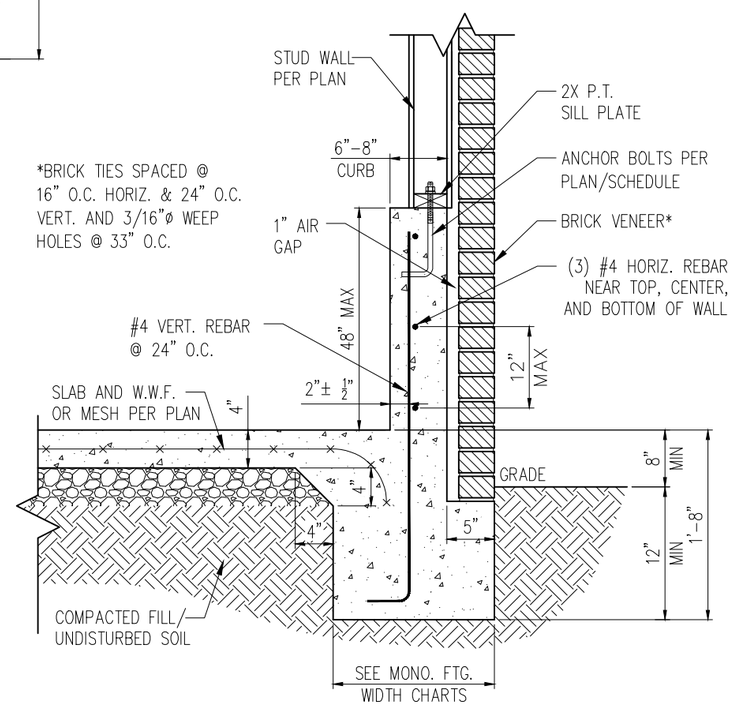

STANDARD – BRICK

3 D4m EXTENDED GARAGE CURB DETAIL W/ BRICK VENEER

NTS

STRUCTURAL MEMBERS ONLY

SUMMIT
ENGINEERING LABORATORY TESTING
3070 HAMMOND BUSINESS PLACE,
SUITE 171, RALEIGH, NC 27603
OFFICE: 919.380.9991
FAX: 919.380.9993
WWW.SUMMIT-COMPANIES.COM

NORTH CAROLINA CERTIFICATE OF AUTHORIZATION
SUMMIT Engineering, Laboratory & Testing, Inc.
No. F-1454

PROJECT
Standard Details
Monolithic Slab Details

CLIENT
Smith Douglas Homes
110 Village Trail, Suite 215
Woodstock, GA 30188

CURRENT DRAWING
DATE: 4/29/2021
SCALE: NTS
PROJECT #: 3832-R2
DRAWN BY: HDK
CHECKED BY: BCP

ORIGINAL DRAWING

NO.	DATE	PROJECT #
0	1/7/16	3832

REFER TO COVER SHEET FOR A COMPLETE LIST OF REVISIONS

NORTH CAROLINA PROFESSIONAL SEAL 046048 ENGINEER BRIAN C. PHILBRICK, JR.
6/1/21

SHEET
D4m

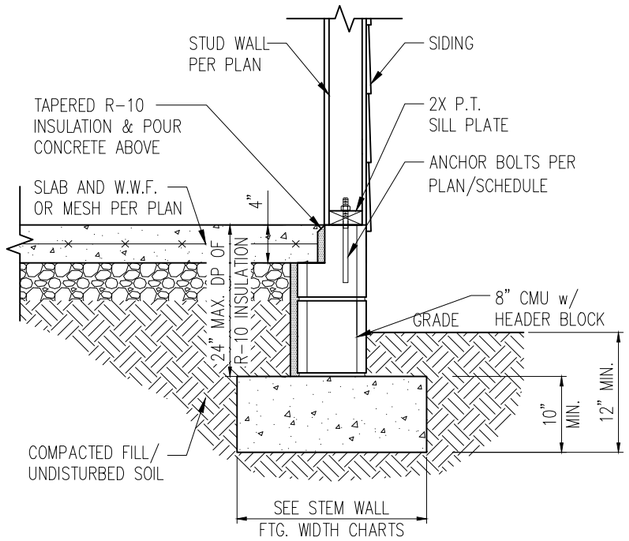

STANDARD – SIDING

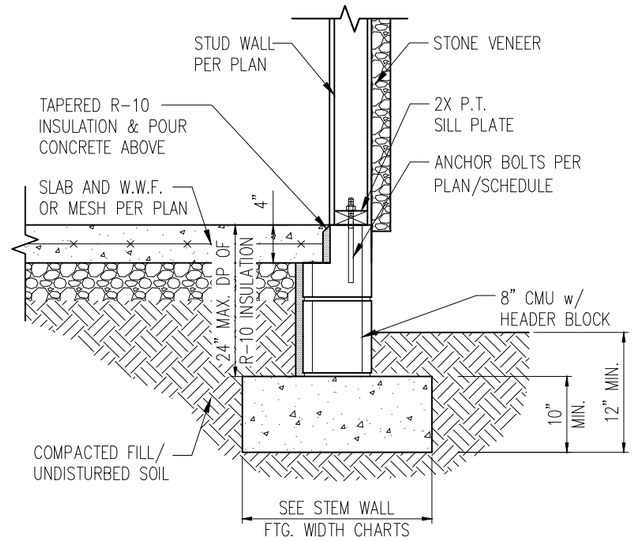

STANDARD – STONE

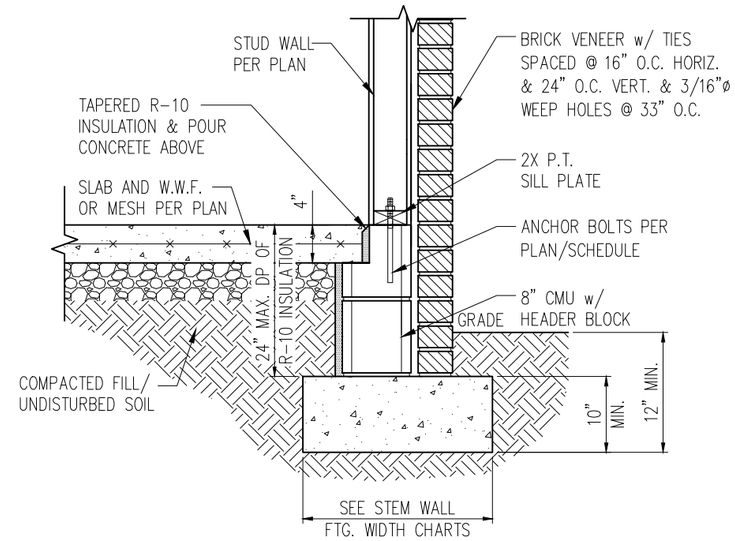

STANDARD – BRICK

1 / D1s TYP. STEM WALL DETAIL

3/4" = 1'-0"

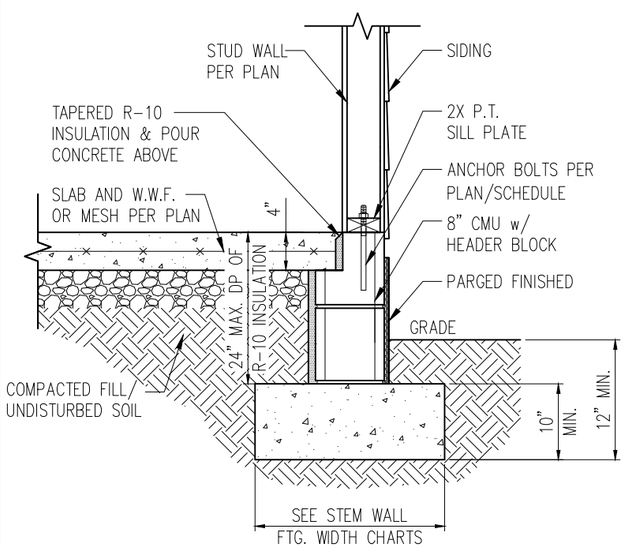

STANDARD – SIDING

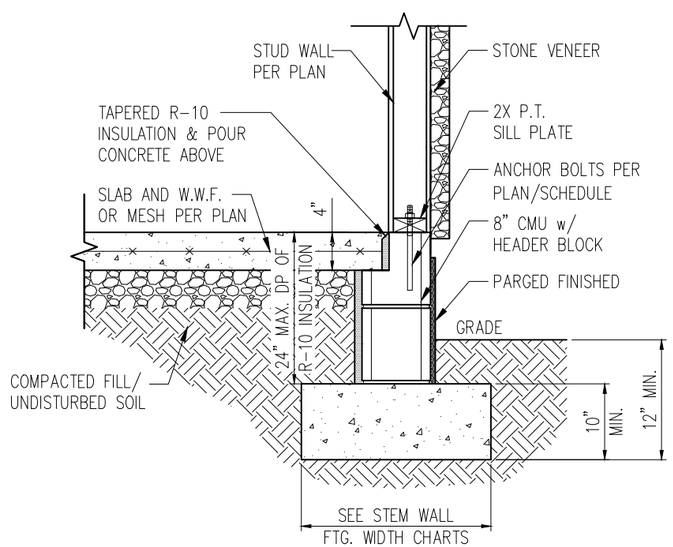

STANDARD – STONE

1a / D1s STEM WALL DETAIL w/ PARGED FINISH

3/4" = 1'-0"

STEM WALL FOOTING WIDTH

# OF STORIES	WIDTH BASED ON SOIL BEARING CAPACITY		
	1500 PSF	2000 PSF	2500 PSF
1 STORY – STD.	16"	16"	16"
1 STORY – BRICK VENEER	21"*	21"*	21"*
2 STORY – STD.	20"	16"	16"
2 STORY – BRICK VENEER	25"*	21"*	21"*
*5" BRICK LEDGE HAS BEEN ADDED TO THE STEM WALL FOOTING WIDTH FOR BRICK SUPPORT			

WALL ANCHOR SCHEDULE

TYPE OF ANCHOR	MIN. CONC. EMBEDMENT	SPACING EMBEDMENT	INTERIOR WALL	EXTERIOR WALL
1/2"ø A307 BOLTS w/ STD. 90° BEND	7"	6'-0"	YES	YES
SST – MAS	4"	5'-0"	NO	YES
HILTI KWIK BOLT KBI 1/2-2-3/4	2-1/4"	6'-0"	YES	NO
1/2"ø HILTI THREADED ROD w/ HIT HY150 ADHESIVE	7"	6'-0"	YES	YES

NOTE: INSTALL ALL ANCHORS 12" MAX. FROM ALL BOTTOM PLATE ENDS AND JOINTS.

NOTES:
1. REFER TO GENERAL NOTES & SPECIFICATIONS ON SHEET CS2 FOR ADDITIONAL INFORMATION.
2. PROVIDE 6 MIL VAPOR BARRIER UNDER ALL SLABS-ON-GRADE.
3. SEE ARCH. DWGS. FOR ALL TOP OF THE SLAB ELEVATIONS, SLOPS AND DEPRESSIONS.

NORTH CAROLINA PROFESSIONAL SEAL 046048 ENGINEER BRIAN C. PHILBRICK, JR.
6/1/21

STRUCTURAL MEMBERS ONLY

SUMMIT
ENGINEERING LABORATORY TESTING
3070 HAMMOND BUSINESS PLACE, SUITE 171, RALEIGH, NC 27603
OFFICE: 919.380.9991
FAX: 919.380.9993
WWW.SUMMIT-COMPANIES.COM

NORTH CAROLINA CERTIFICATE OF AUTHORIZATION
SUMMIT Engineering, Laboratory & Testing, Inc.
No. F-1454

PROJECT
Standard Details
Stemwall Details

CLIENT
Smith Douglas Homes
110 Village Trail, Suite 215
Woodstock, GA 30188

CURRENT DRAWING
DATE: 4/29/2021
SCALE: NTS
PROJECT #: 3832-R2
DRAWN BY: HDK
CHECKED BY: BCP

ORIGINAL DRAWING

NO.	DATE	PROJECT #
0	1/7/16	3832

REFER TO COVER SHEET FOR A COMPLETE LIST OF REVISIONS

SHEET
D1s

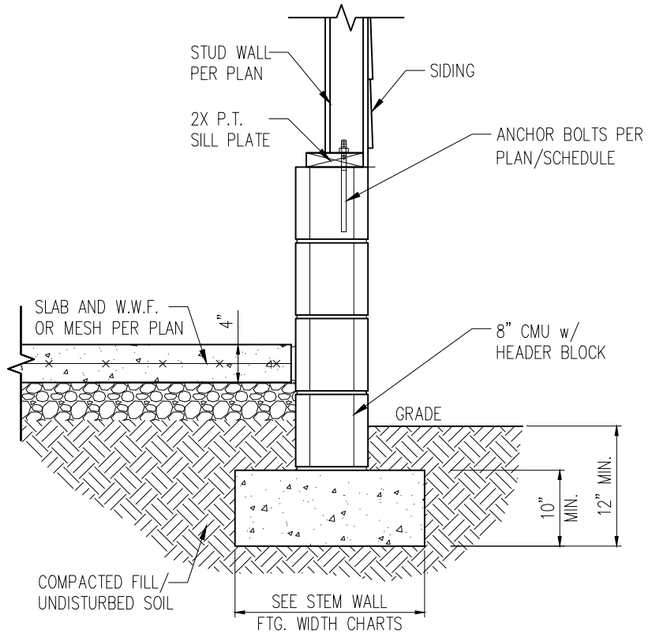

STANDARD – SIDING

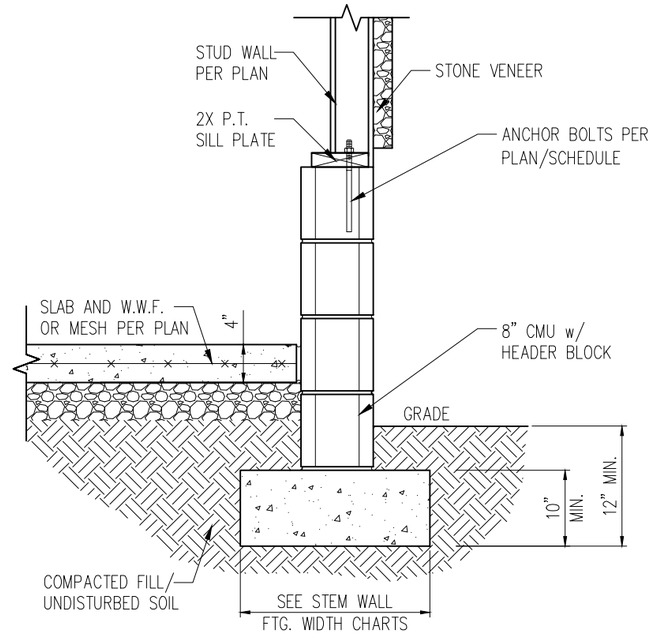

STANDARD – STONE

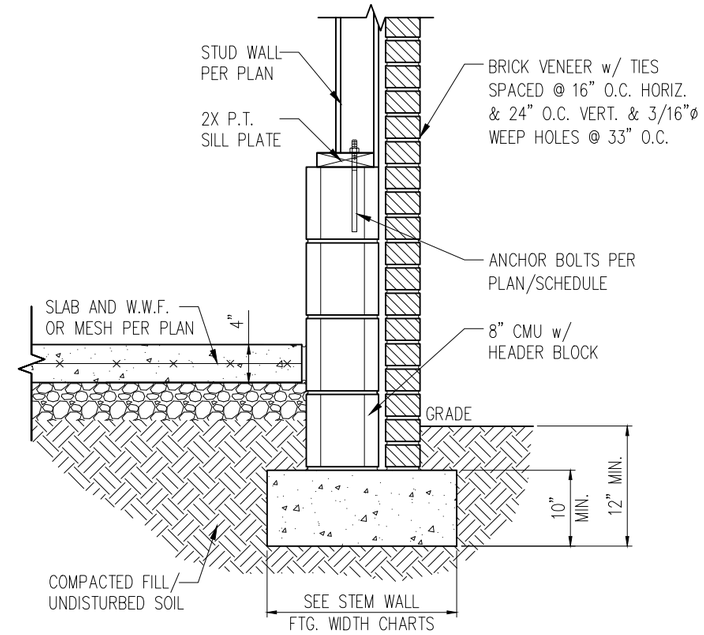

STANDARD – BRICK

1 D2s TYP. GARAGE CURB DETAIL

3/4" = 1'-0"

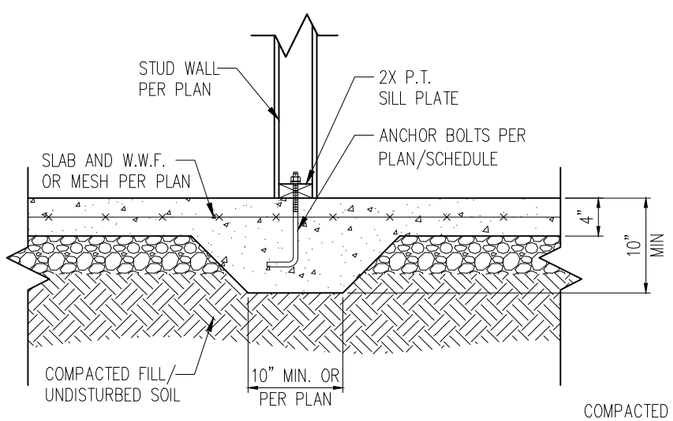

2 D2s TYP. THICKENED SLAB DETAIL

3/4" = 1'-0"

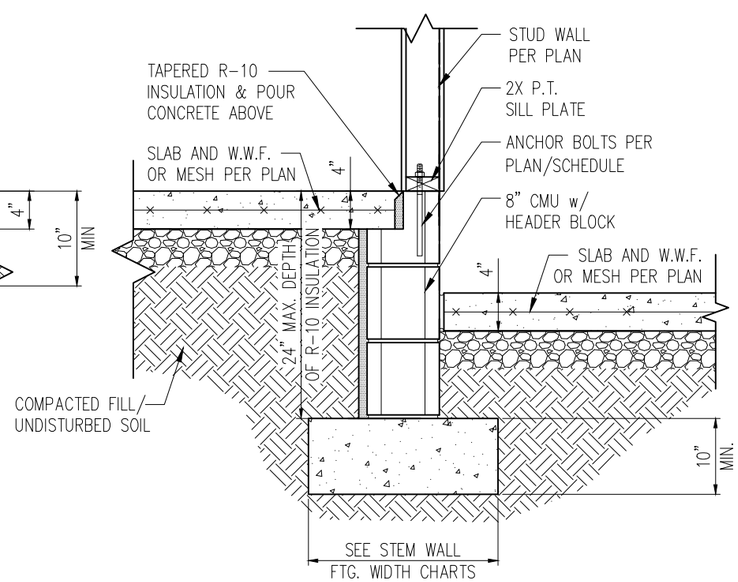

3 D2s HOUSE/GARAGE WALL DETAIL

3/4" = 1'-0"

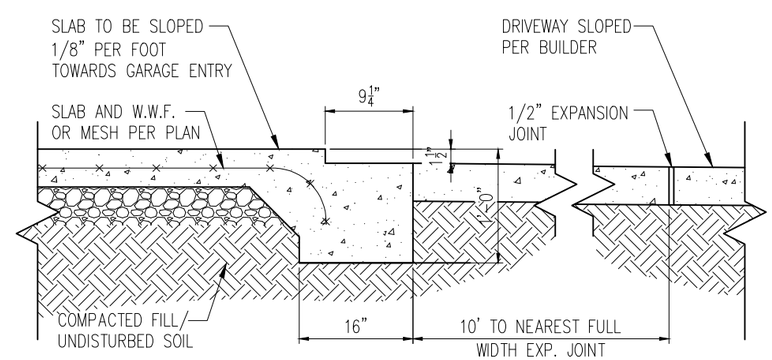

4 D2s SLAB AT GARAGE DOOR

3/4" = 1'-0"

NOTES:

1. REFER TO GENERAL NOTES & SPECIFICATIONS ON SHEET CS2 FOR ADDITIONAL INFORMATION.
2. PROVIDE 6 MIL VAPOR BARRIER UNDER ALL SLABS-ON-GRADE.
3. SEE ARCH. DWGS. FOR ALL TOP OF THE SLAB ELEVATIONS, SLOPES AND DEPRESSIONS.

NORTH CAROLINA PROFESSIONAL SEAL 046048 ENGINEER BRIAN C. PHILBRICK, JR.

6/1/21

STRUCTURAL MEMBERS ONLY

SUMMIT
ENGINEERING LABORATORY TESTING
3070 HAMMOND BUSINESS PLACE, SUITE 171, RALEIGH, NC 27603
OFFICE: 919.380.9991
FAX: 919.380.9993
WWW.SUMMIT-COMPANIES.COM

NORTH CAROLINA CERTIFICATE OF AUTHORIZATION
SUMMIT Engineering, Laboratory & Testing, Inc.
No. F-1454

PROJECT
Standard Details
Stemwall Details

CLIENT
Smith Douglas Homes
110 Village Trail, Suite 215
Woodstock, GA 30188

CURRENT DRAWING
DATE: 4/29/2021
SCALE: NTS
PROJECT #: 3832-R2
DRAWN BY: HDK
CHECKED BY: BCP

ORIGINAL DRAWING

NO.	DATE	PROJECT #
0	1/7/16	3832

REFER TO COVER SHEET FOR A COMPLETE LIST OF REVISIONS

SHEET
D2s

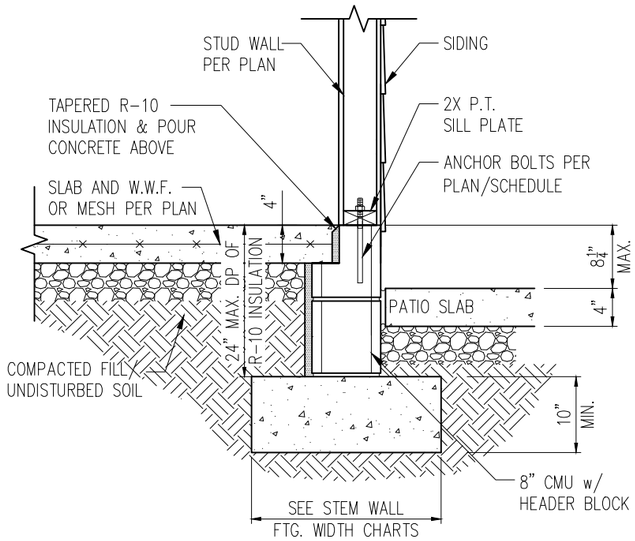

STANDARD – SIDING

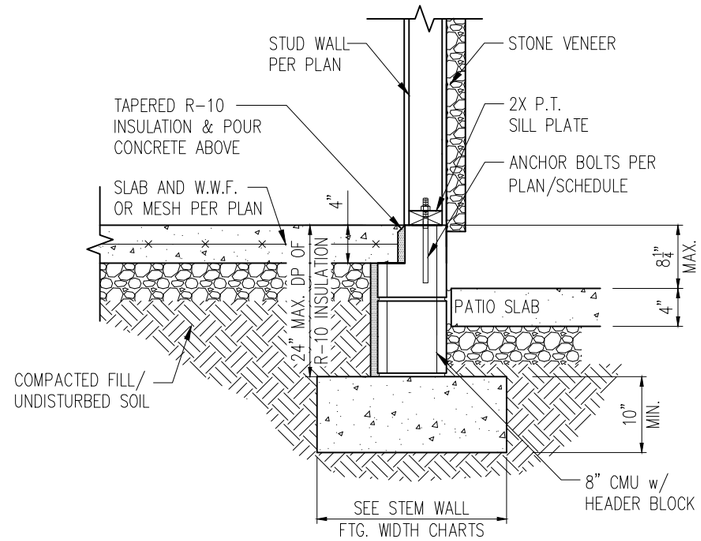

STANDARD – STONE

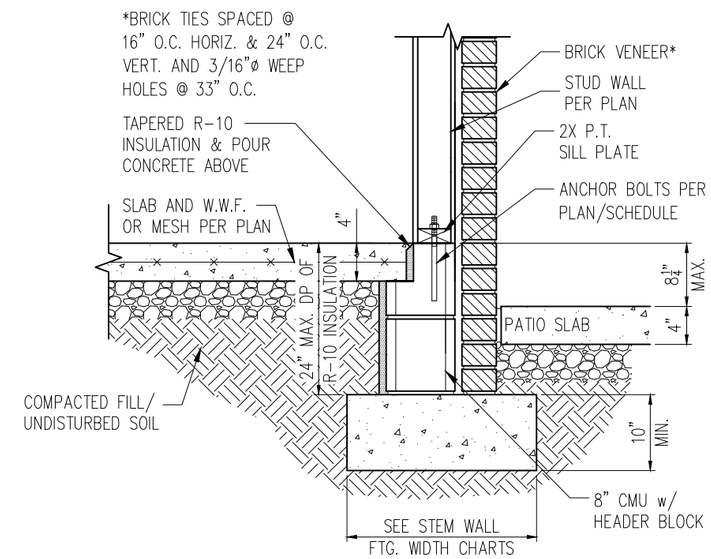

STANDARD – BRICK

1 / D3s PORCH SLAB DETAIL

3/4" = 1'-0"

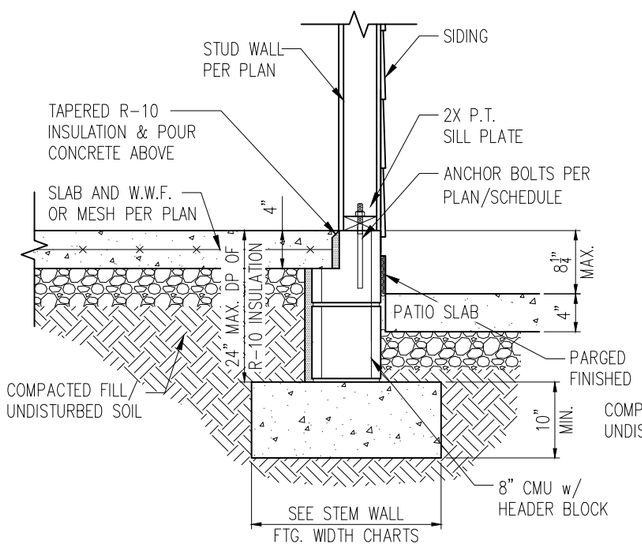

STANDARD – SIDING

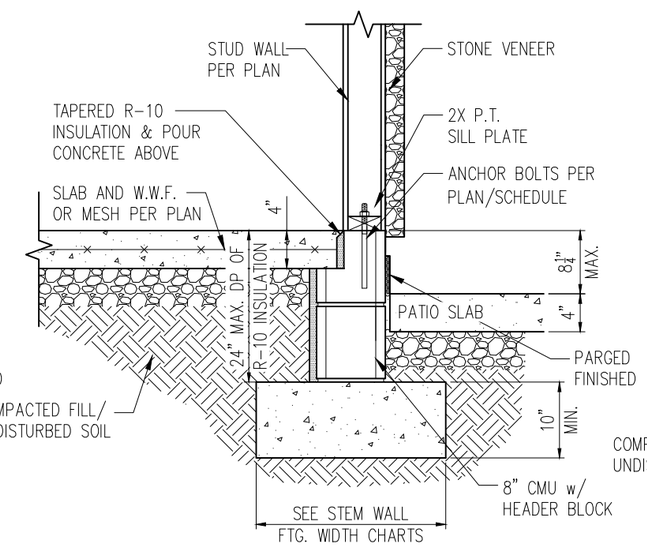

STANDARD – STONE

1a / D1s PORCH SLAB DETAIL w/ PARGED FINISH

3/4" = 1'-0"

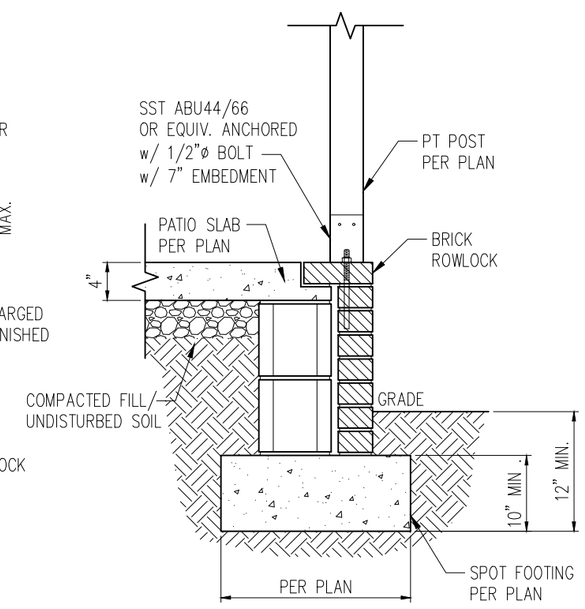

2 / D3s COVERED PORCH DETAIL

3/4" = 1'-0"

NOTES:

1. REFER TO GENERAL NOTES & SPECIFICATIONS ON SHEET CS2 FOR ADDITIONAL INFORMATION.
2. PROVIDE 6 MIL VAPOR BARRIER UNDER ALL SLABS-ON-GRADE.
3. SEE ARCH. DWGS. FOR ALL TOP OF THE SLAB ELEVATIONS, SLOPES AND DEPRESSIONS.

NORTH CAROLINA PROFESSIONAL SEAL 046048 ENGINEER BRIAN C. PHILBRICK, JR.

6/1/21

STRUCTURAL MEMBERS ONLY

SUMMIT
ENGINEERING LABORATORY TESTING
3070 HAMMOND BUSINESS PLACE, SUITE 171, RALEIGH, NC 27603
OFFICE: 919.380.9991
FAX: 919.380.9993
WWW.SUMMIT-COMPANIES.COM

NORTH CAROLINA CERTIFICATE OF AUTHORIZATION
SUMMIT Engineering, Laboratory & Testing, Inc.
No. F-1454

PROJECT
Standard Details
Stemwall Details

CLIENT
Smith Douglas Homes
110 Village Trail, Suite 215
Woodstock, GA 30188

CURRENT DRAWING

DATE: 4/29/2021

SCALE: NTS

PROJECT #: 3832-R2

DRAWN BY: HDK

CHECKED BY: BCP

ORIGINAL DRAWING

NO.	DATE	PROJECT #
0	1/7/16	3832

REFER TO COVER SHEET FOR A COMPLETE LIST OF REVISIONS

SHEET

D3s

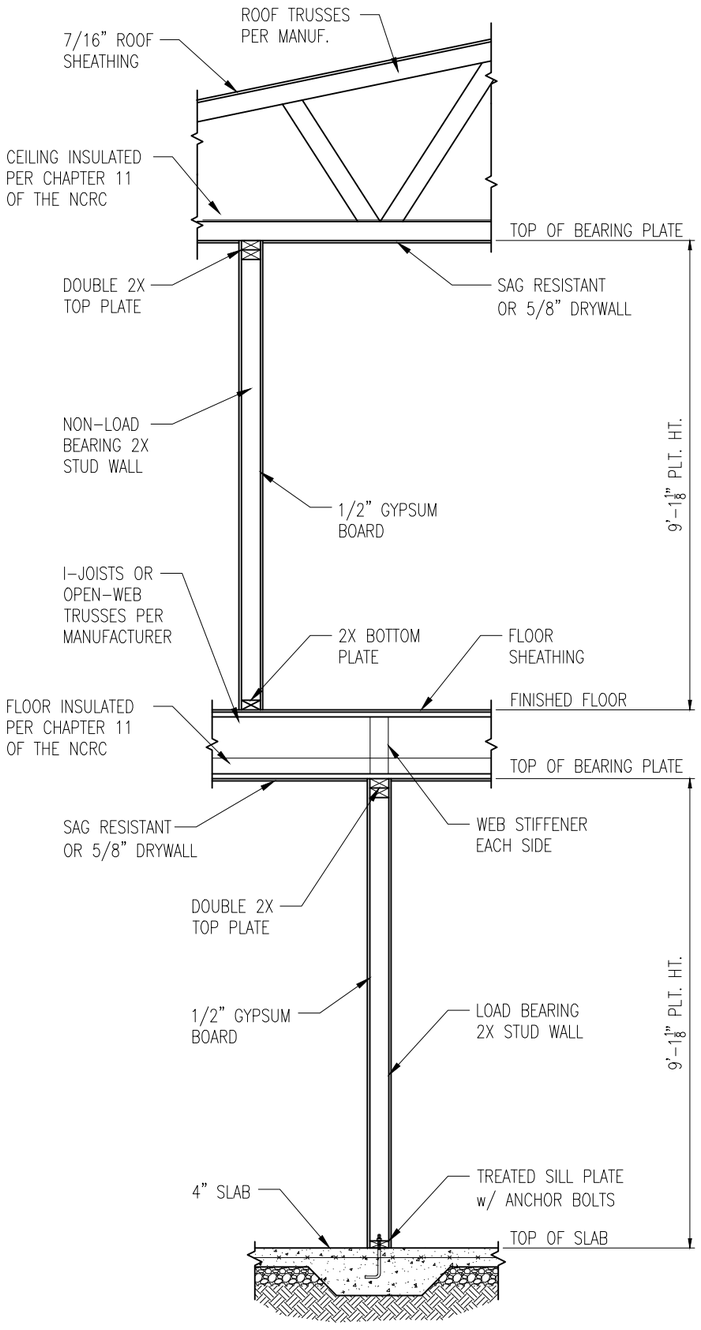

1 D4s TYP. INTERIOR LOAD BEARING WALL SECTION

3/4" = 1'-0"

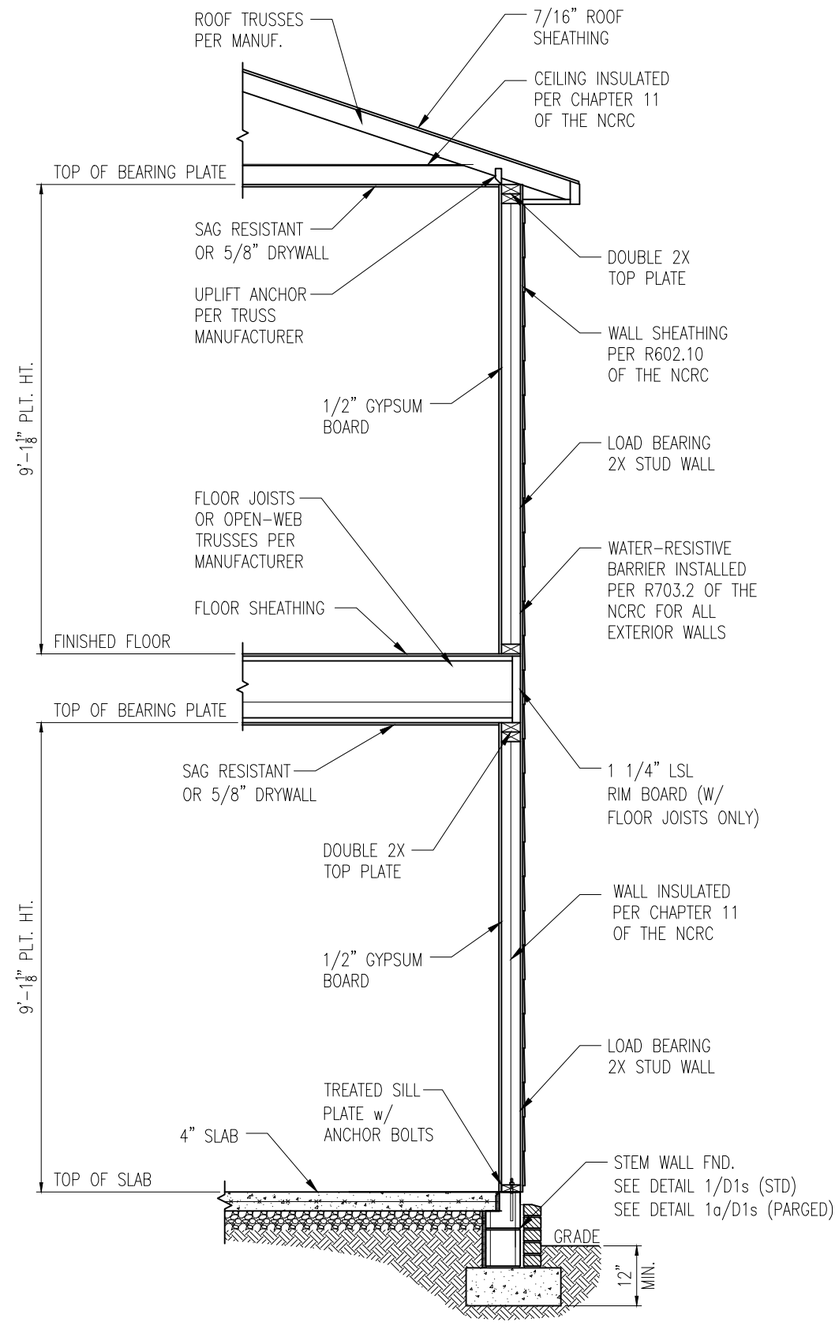

2 D4s TYP. EXTERIOR LOAD BEARING WALL SECTION

3/4" = 1'-0"

-SIMILAR w/ BRICK AND STONE
-BRICK TIES SPACED @ 16" O.C. HORIZ. & 24" O.C. VERT.
-MIN. 3/16"ø WEEP HOLES @ 33" O.C.

NOTES:

1. REFER TO GENERAL NOTES & SPECIFICATIONS ON SHEET CS2 FOR ADDITIONAL INFORMATION.
2. PROVIDE 6 MIL VAPOR BARRIER UNDER ALL SLABS-ON-GRADE.
3. SEE ARCH. DWGS. FOR ALL TOP OF THE SLAB ELEVATIONS, SLOPES AND DEPRESSIONS.

NORTH CAROLINA PROFESSIONAL SEAL 046048 ENGINEER BRIAN C. PHILBRICK, JR.

6/1/21

STRUCTURAL MEMBERS ONLY

SUMMIT
ENGINEERING LABORATORY TESTING
3070 HAMMOND BUSINESS PLACE,
SUITE 171, RALEIGH, NC 27603
OFFICE: 919.380.9991
FAX: 919.380.9993
WWW.SUMMIT-COMPANIES.COM

NORTH CAROLINA CERTIFICATE OF AUTHORIZATION
SUMMIT Engineering, Laboratory & Testing, Inc.
No. F-1454

PROJECT
Standard Details
Stemwall Details

CLIENT
Smith Douglas Homes
110 Village Trail, Suite 215
Woodstock, GA 30188

CURRENT DRAWING

DATE: 4/29/2021

SCALE: NTS

PROJECT #: 3832-R2

DRAWN BY: HDK

CHECKED BY: BCP

ORIGINAL DRAWING

NO.	DATE	PROJECT #
0	1/7/16	3832

REFER TO COVER SHEET FOR A COMPLETE LIST OF REVISIONS

SHEET

D4s

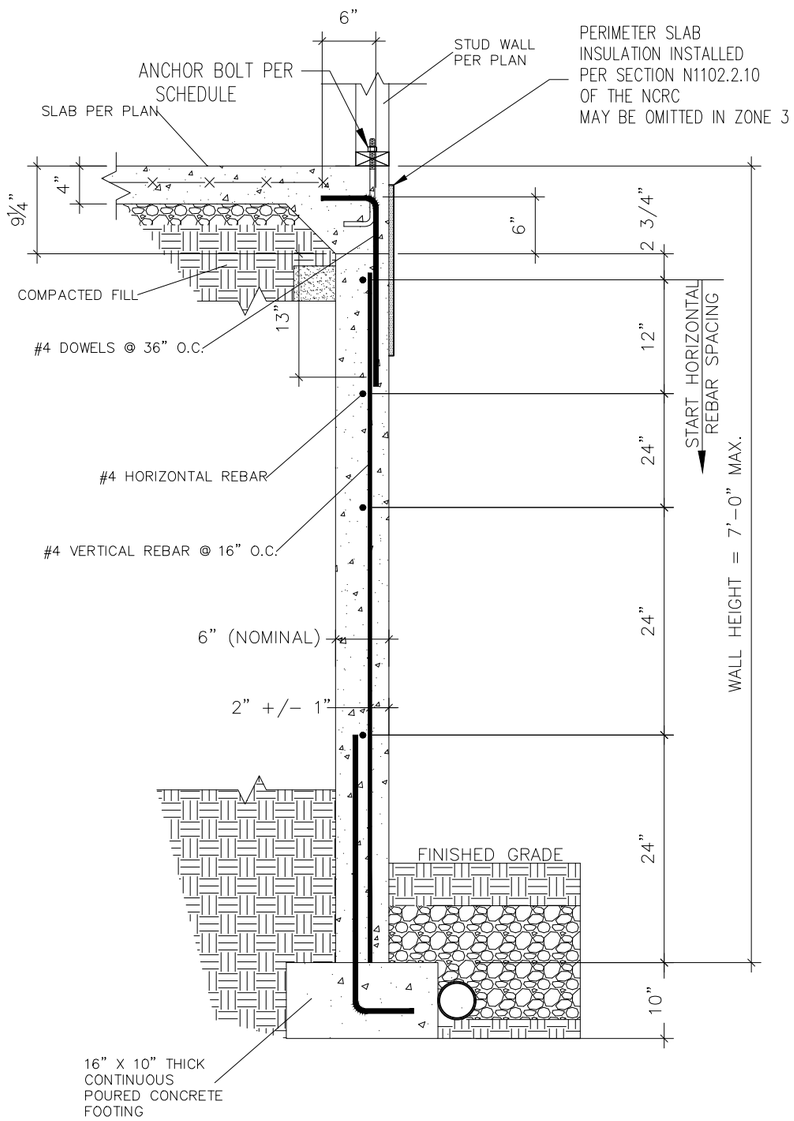

1 D5s SUBWALL FOUNDATION

3/4" = 1'-0"

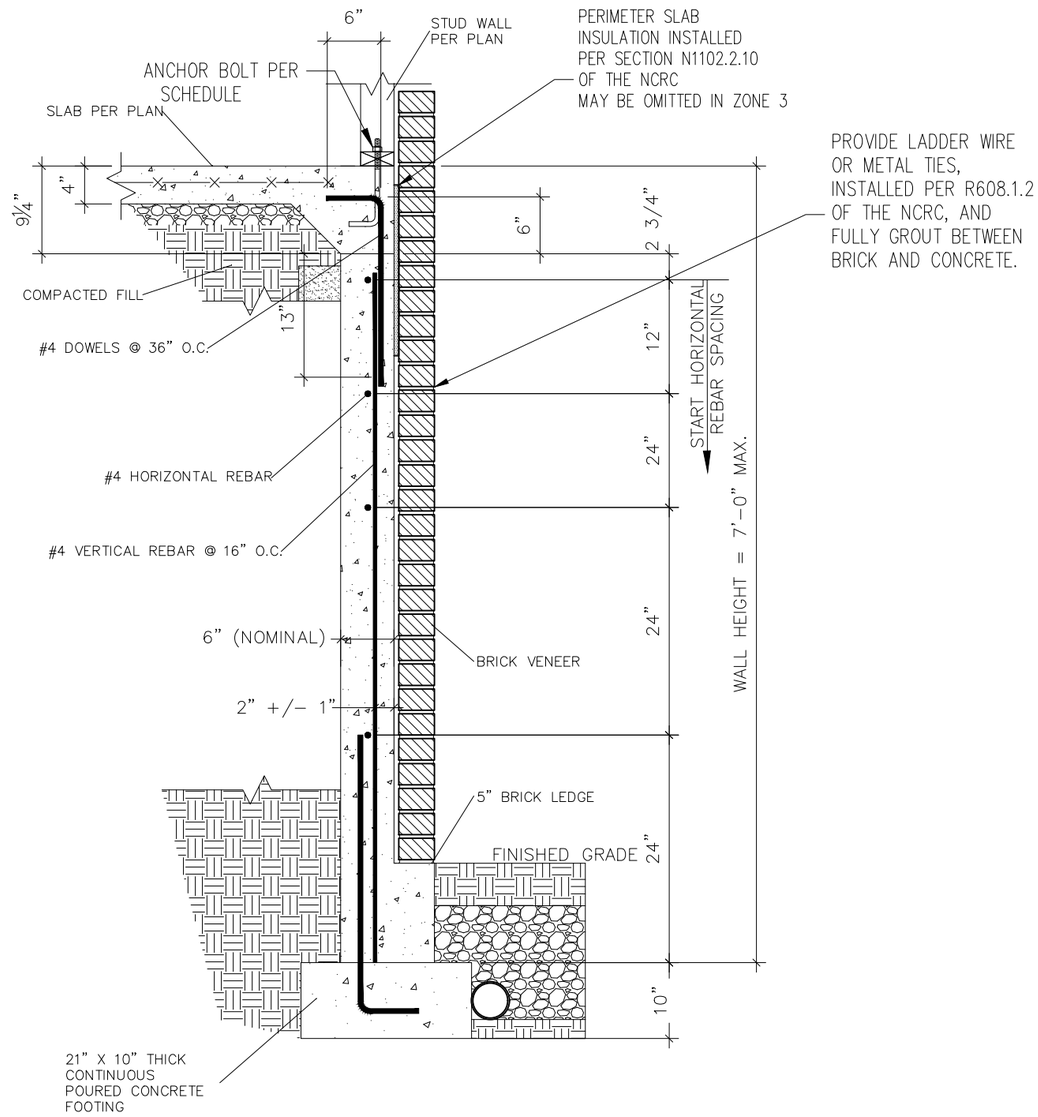

2 D5s SUBWALL FOUNDATION W/ BRICK VENEER

3/4" = 1'-0"

NORTH CAROLINA PROFESSIONAL SEAL 046048 ENGINEER BRIAN C. PHILBRICK, JR.

6/1/21

STRUCTURAL MEMBERS ONLY

SUMMIT
ENGINEERING LABORATORY TESTING
3070 HAMMOND BUSINESS PLACE,
SUITE 171, RALEIGH, NC 27603
OFFICE: 919.380.9991
FAX: 919.380.9993
WWW.SUMMIT-COMPANIES.COM

NORTH CAROLINA CERTIFICATE OF AUTHORIZATION
SUMMIT Engineering, Laboratory & Testing, Inc.
No. F-1454

PROJECT
Standard Details
Stemwall Details

CLIENT
Smith Douglas Homes
110 Village Trail, Suite 215
Woodstock, GA 30188

CURRENT DRAWING

DATE: 4/29/2021

SCALE: NTS

PROJECT #: 3832-R2

DRAWN BY: HDK

CHECKED BY: BCP

ORIGINAL DRAWING

NO.	DATE	PROJECT #
0	1/7/16	3832

REFER TO COVER SHEET FOR A COMPLETE LIST OF REVISIONS

SHEET

D5s

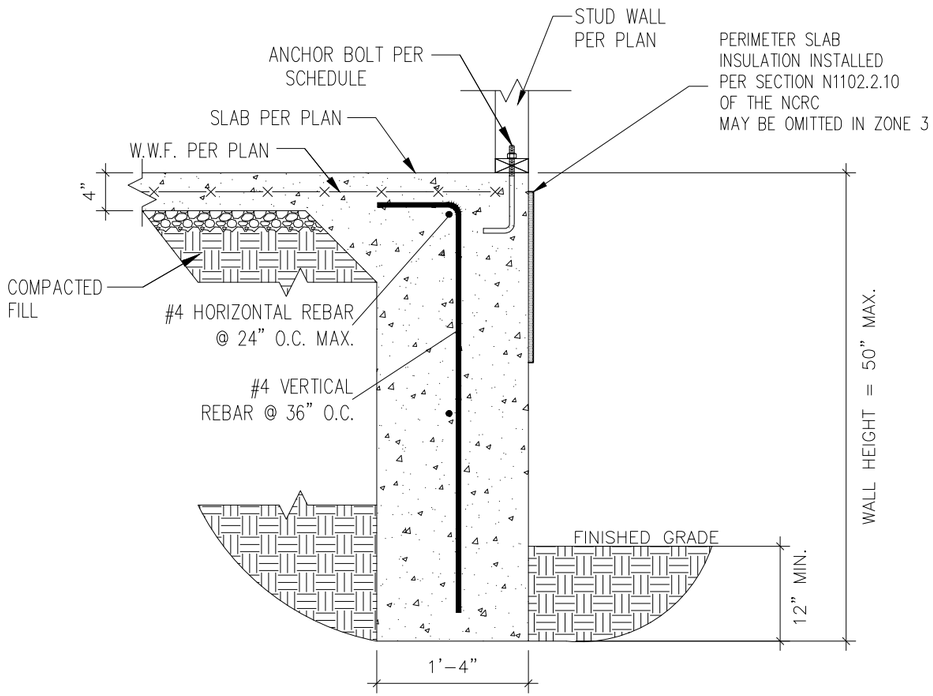

1 D6s TURNDOWN FOUNDATION

3/4" = 1'-0"

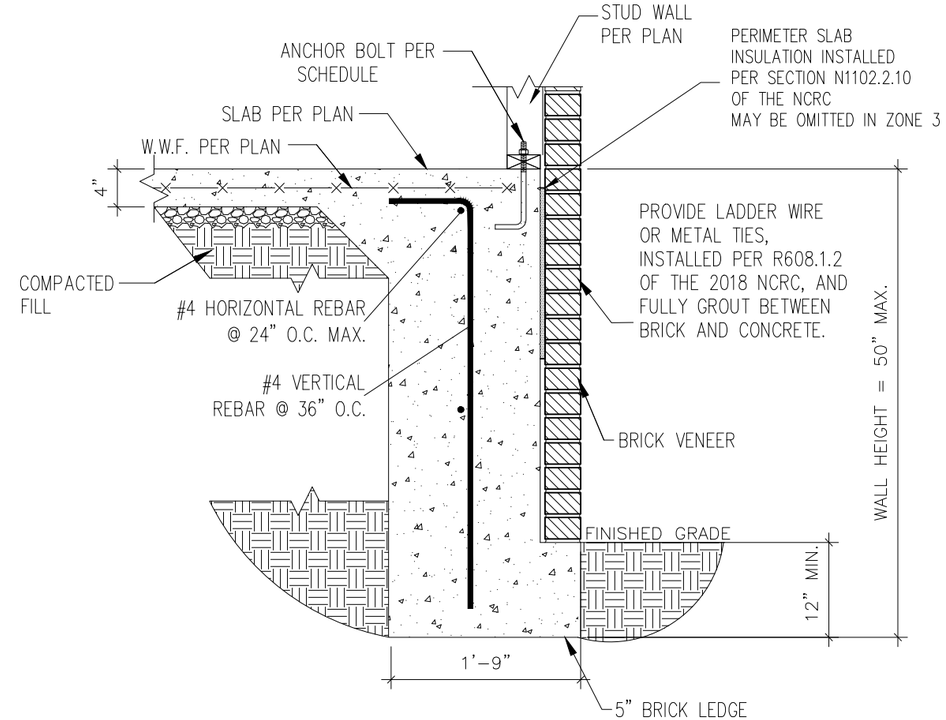

2 D6s TURNDOWN FOUNDATION W/ BRICK VENEER

3/4" = 1'-0"

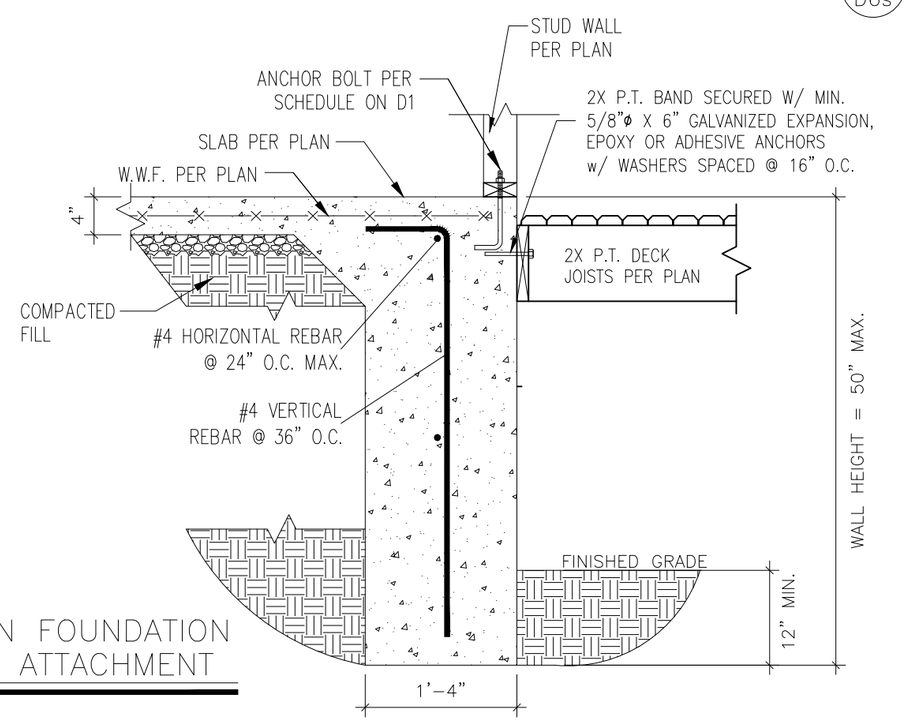

3 D6s TURNDOWN FOUNDATION W/ DECK ATTACHMENT

3/4" = 1'-0"

NORTH CAROLINA PROFESSIONAL SEAL 046048 ENGINEER BRIAN C. PHILBRICK, JR.

6/1/21

STRUCTURAL MEMBERS ONLY

SUMMIT
ENGINEERING LABORATORY TESTING
3070 HAMMOND BUSINESS PLACE,
SUITE 171, RALEIGH, NC 27603
OFFICE: 919.380.9991
FAX: 919.380.9993
WWW.SUMMIT-COMPANIES.COM

NORTH CAROLINA CERTIFICATE OF AUTHORIZATION
SUMMIT Engineering, Laboratory & Testing, Inc.
No. F-1454

PROJECT
Standard Details
Stemwall Details

CLIENT
Smith Douglas Homes
110 Village Trail, Suite 215
Woodstock, GA 30188

CURRENT DRAWING

DATE: 4/29/2021

SCALE: NTS

PROJECT #: 3832-R2

DRAWN BY: HDK

CHECKED BY: BCP

ORIGINAL DRAWING

NO.	DATE	PROJECT #
0	1/7/16	3832

REFER TO COVER SHEET FOR A COMPLETE LIST OF REVISIONS

SHEET

D6s

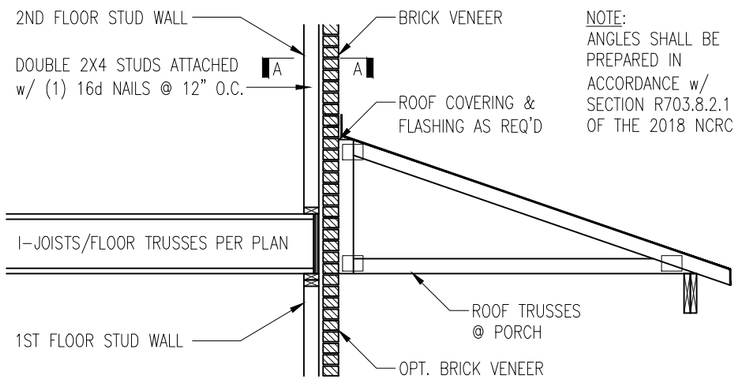

NOTE:
ANGLES SHALL BE PREPARED IN ACCORDANCE w/ SECTION R703.8.2.1 OF THE 2018 NCRC

TRUSSES PERPENDICULAR TO STUD WALL

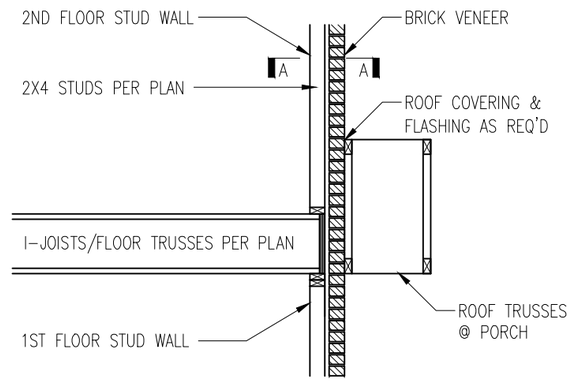

TRUSSES PARALLEL TO STUD WALL
w/ CONTINUOUS BRICK VENEER

1 / D5f BRICK SUPPORT ABOVE STORAGE/PORCH ROOF DETAIL

NTS

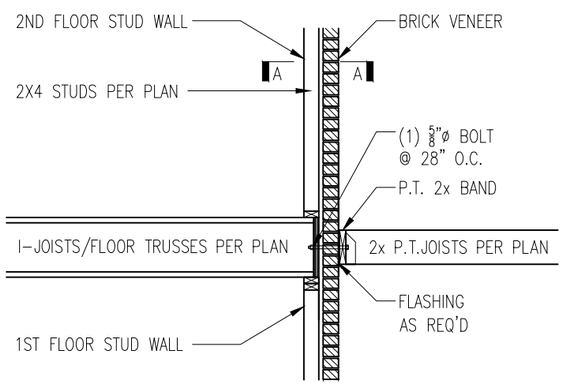

3 / D5f BALCONY JOIST ATTACHMENT

NTS

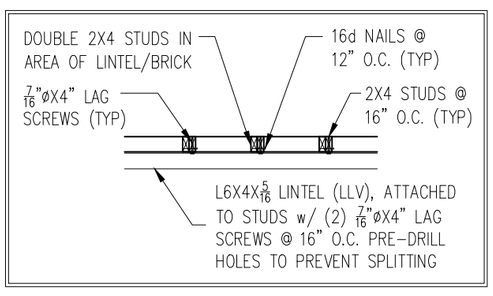

SECTION A-A

NTS

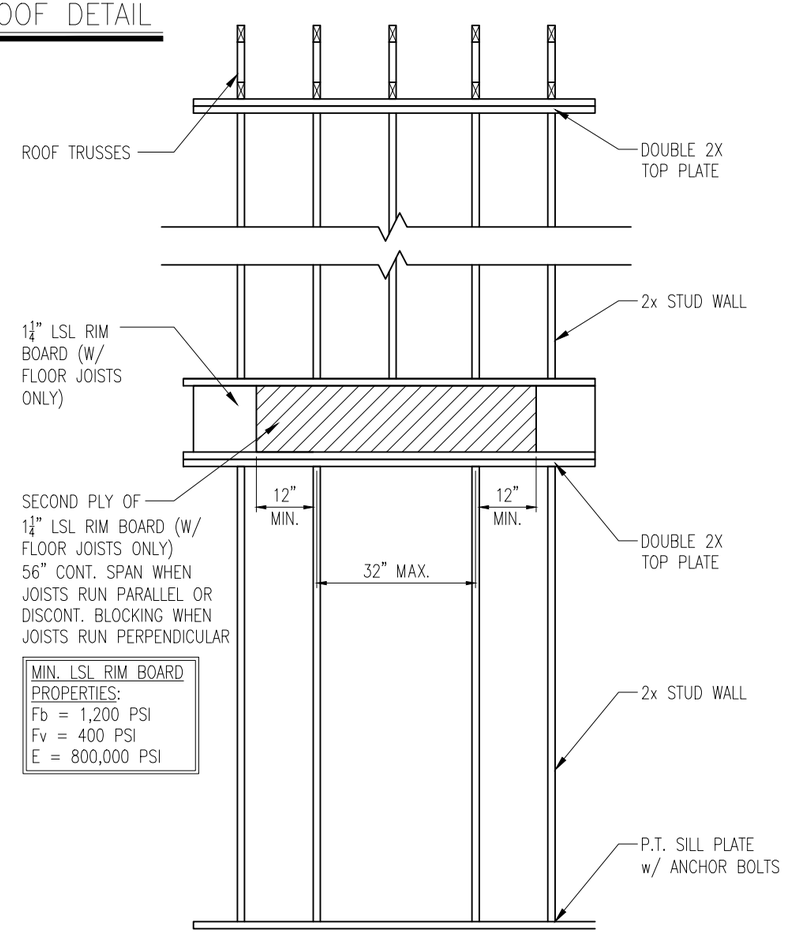

MIN. LSL RIM BOARD PROPERTIES:
Fb = 1,200 PSI
Fv = 400 PSI
E = 800,000 PSI

4 / D5f TYP. RANGE VENT FRAMING

VENTED TO EXTERIOR WALL

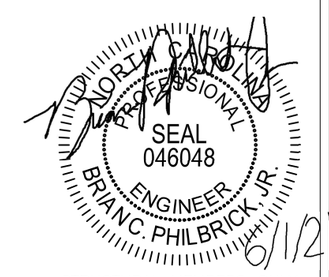

6/1/21

STRUCTURAL MEMBERS ONLY

SUMMIT
ENGINEERING LABORATORY TESTING
3070 HAMMOND BUSINESS PLACE,
SUITE 171, RALEIGH, NC 27603
OFFICE: 919.380.9991
FAX: 919.380.9993
WWW.SUMMIT-COMPANIES.COM

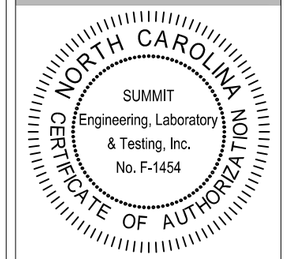

PROJECT
Standard Details
Framing Details

CLIENT
Smith Douglas Homes
110 Village Trail, Suite 215
Woodstock, GA 30188

CURRENT DRAWING
DATE: 4/29/2021
SCALE: NTS
PROJECT #: 3832-R2
DRAWN BY: HDK
CHECKED BY: BCP

ORIGINAL DRAWING

NO.	DATE	PROJECT #
0	1/7/16	3832

REFER TO COVER SHEET FOR A COMPLETE LIST OF REVISIONS

SHEET
D5f

1 D6f METHOD PF: PORTAL FRAME DETAIL

3/8" = 1'-0"

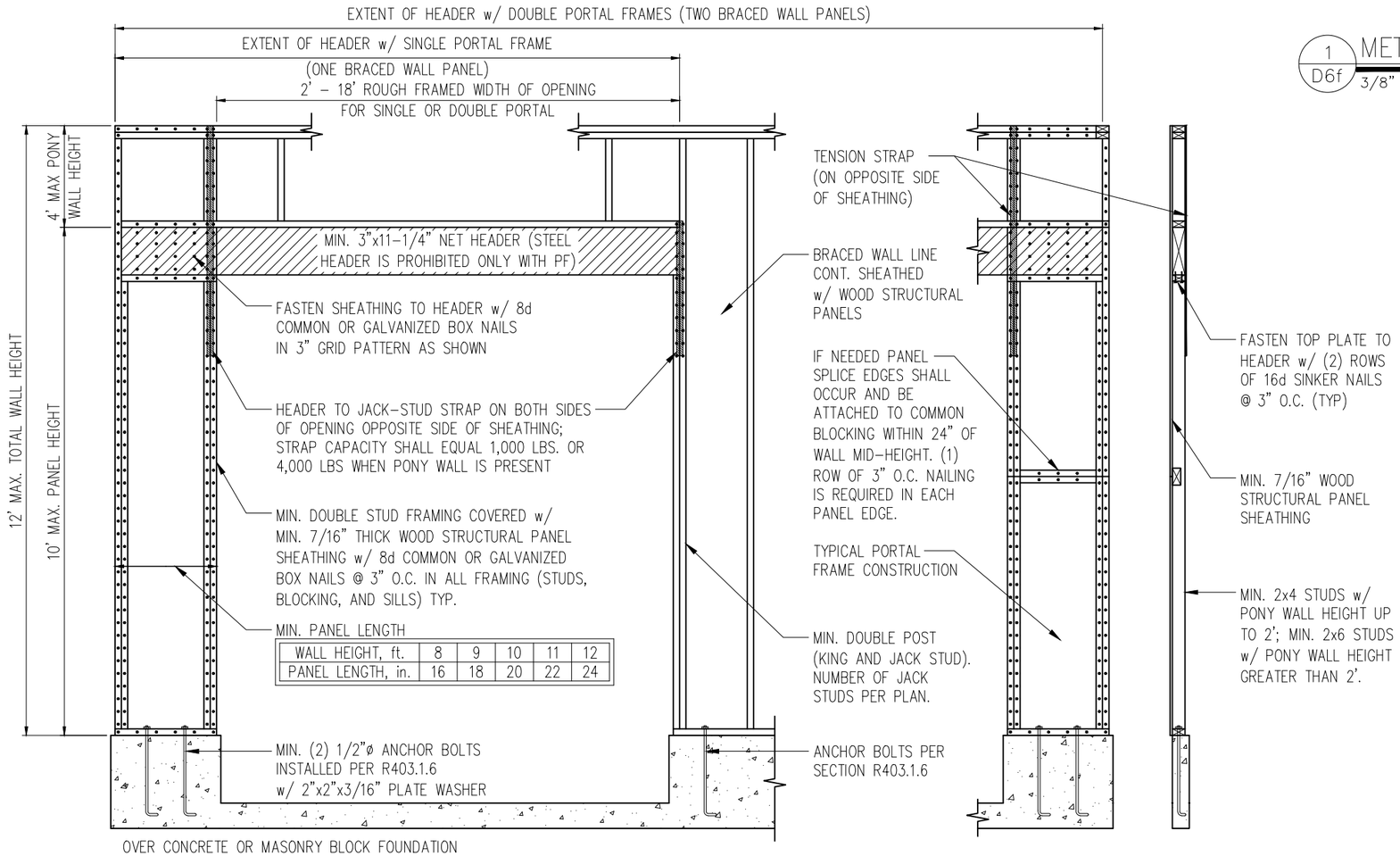

WALL HEIGHT, ft.	8	9	10	11	12
PANEL LENGTH, in.	16	18	20	22	24

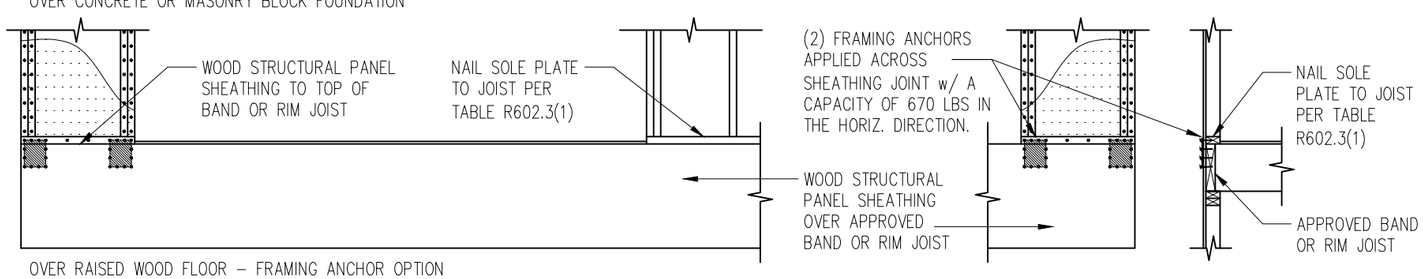

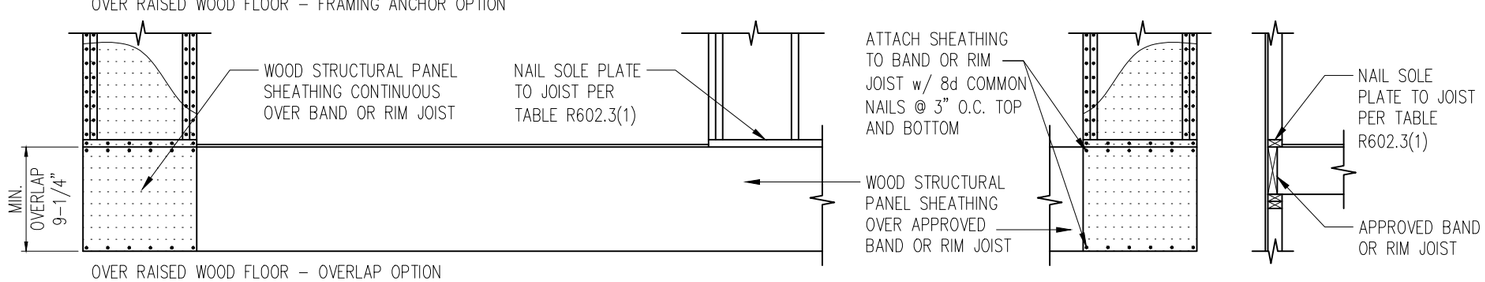

FRONT ELEVATION

SECTION

SUMMIT
ENGINEERING LABORATORY TESTING
3070 HAMMOND BUSINESS PLACE,
SUITE 171, RALEIGH, NC 27603
OFFICE: 919.380.9991
FAX: 919.380.9993
WWW.SUMMIT-COMPANIES.COM

NORTH CAROLINA CERTIFICATE OF AUTHORIZATION
SUMMIT Engineering, Laboratory & Testing, Inc.
No. F-1454

PROJECT
Standard Details
Framing Details - Bracing

CLIENT
Smith Douglas Homes
110 Village Trail, Suite 215
Woodstock, GA 30188

CURRENT DRAWING
DATE: 4/29/2021
SCALE: NTS
PROJECT #: 3832-R2
DRAWN BY: HDK
CHECKED BY: BCP

ORIGINAL DRAWING

NO.	DATE	PROJECT #
0	1/7/16	3832

REFER TO COVER SHEET FOR A COMPLETE LIST OF REVISIONS

NORTH CAROLINA PROFESSIONAL SEAL 046048 ENGINEER BRIAN C. PHILBRICK, JR.
6/1/21

STRUCTURAL MEMBERS ONLY

SHEET
D6f

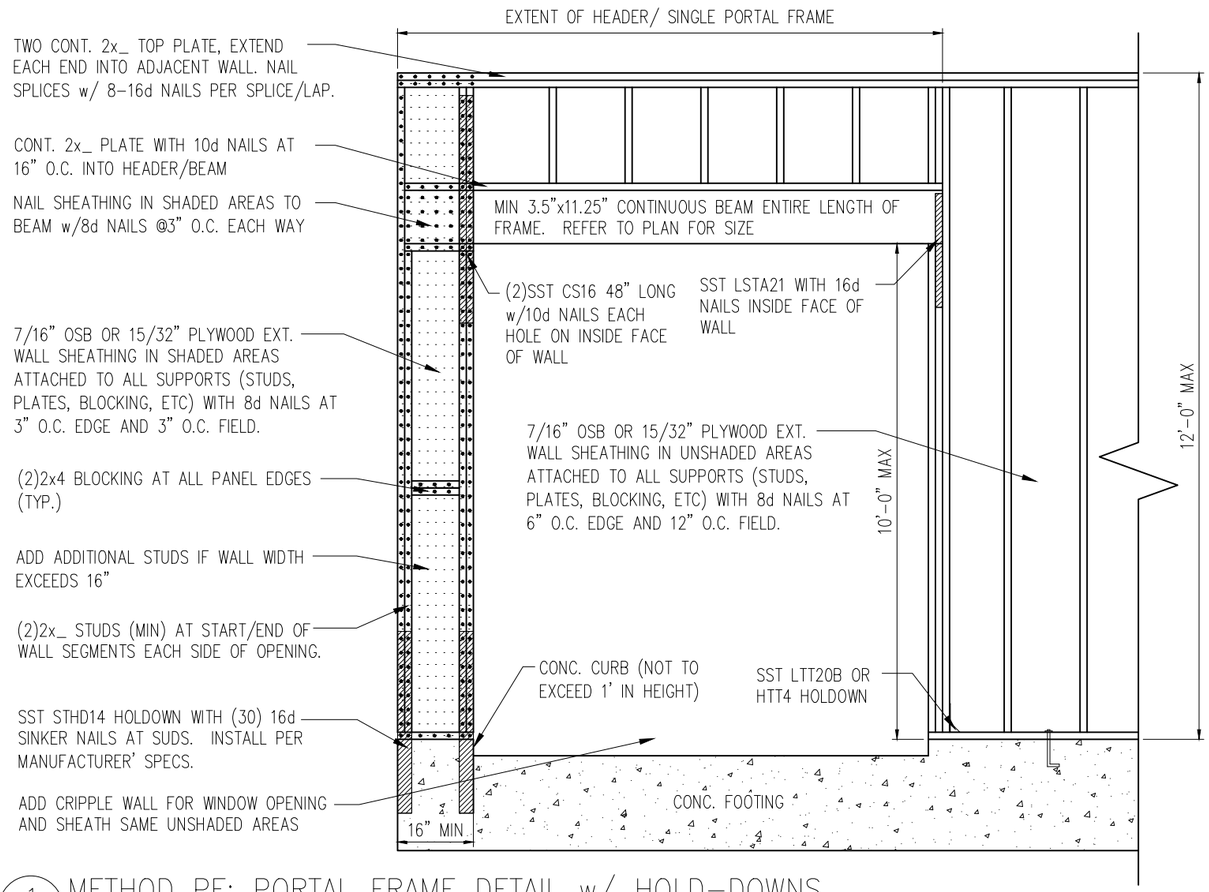

1 D7f METHOD PF: PORTAL FRAME DETAIL w/ HOLD-DOWNS

3/4" = 1'-0"

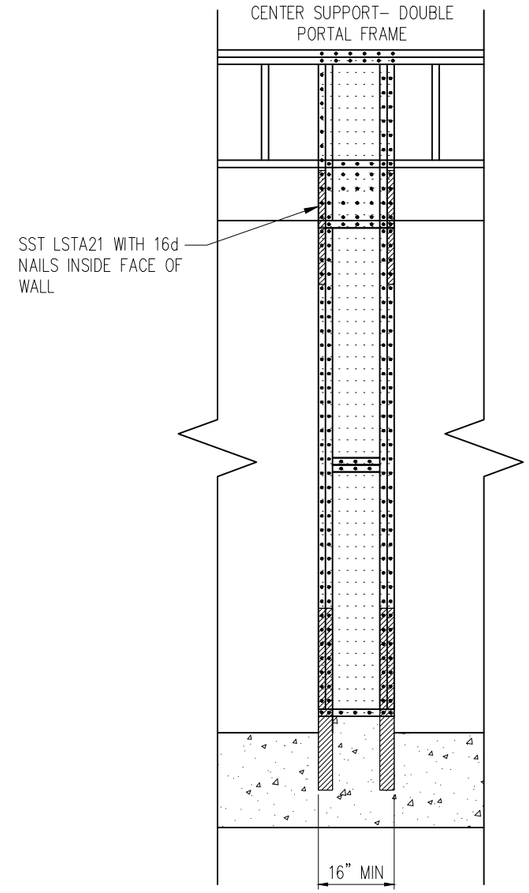

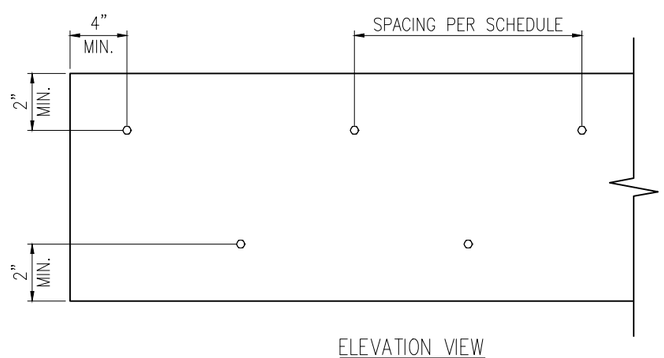

ELEVATION VIEW

2 D7f MULTI-PLY BEAM CONNECTION DETAIL

N.T.S

MINIMUM FASTENING REQUIREMENTS FOR TOP- AND SIDE-LOADED MEMBERS

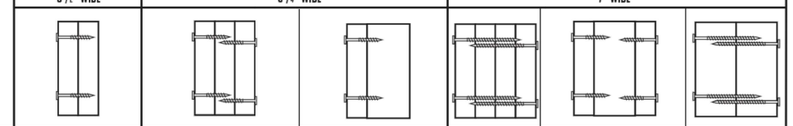

		3½" WIDE	5¼" WIDE		7" WIDE		
FASTENER TYPE	LVL DEPTH	2-Ply 1¾"	3-Ply 1¾"	1¾" + 3½"	4-Ply 1¾"	2-Ply 1¾" + 3½"	2-Ply 3½"
10d (0.128" x 3") Nails	7¼"≤d<14"	3 rows @ 12" o.c.	3 rows @ 12" o.c. **(ES)**	3 rows @ 12" o.c.	-	3 rows @ 12" o.c. **(ES)**	-
	d≥14"	4 rows @ 12" o.c.	4 rows @ 12" o.c. **(ES)**	4 rows @ 12" o.c.	-	4 rows @ 12" o.c. **(ES)**	-
16d (0.162" x 3½") Nails	7¼"≤d<14"	2 rows @ 12" o.c.	2 rows @ 12" o.c. **(ES)**	2 rows @ 12" o.c.	-	2 rows @ 12" o.c. **(ES)**	-
	d≥14"	3 rows @ 12" o.c.	3 rows @ 12" o.c. **(ES)**	3 rows @ 12" o.c.	-	3 rows @ 12" o.c. **(ES)**	-
½" Through Bolts	d≥7¼"	2 rows @ 24" o.c.	2 rows @ 24" o.c.		2 rows @ 24" o.c.		
SDS ¼" x 3½", WS35, 3⅜" TrussLok		2 rows @ 24" o.c.	2 rows @ 24" o.c. **(ES)**	2 rows @ 24" o.c.	-	2 rows @ 24" o.c. **(ES)**	-
SDS ¼" x 6", WS6		-	-		2 rows @ 24" o.c. **(ES)**		
5" TrussLok		-	2 rows @ 24" o.c.		-		
6¾" TrussLok		-	-		2 rows @ 24" o.c.		

NOTES:

1. All fasteners must meet the minimum requirements in the table above. Side-loaded multiple-ply members must meet the minimum fastening and side-loading capacity requirements given on page 48.
2. Minimum fastening requirements for depths less than 7¼" require special consideration. Please contact your technical representative.
3. Three general rules for staggering or offsetting for a certain fastener schedule:
   (1) if staggering or offsetting is not referenced, then none is required;
   (2) if staggering is referenced, then fasteners installed in adjacent rows on the front side are to be staggered up to one-half the o.c. spacing, but maintaining the fastener clearances above; and
   (3) if "**ES**" is referenced, then the fastener schedule must be repeated on each side, with the fasteners on the back side offset up to one-half the o.c. spacing of the front side (whether or not it is staggered).

NORTH CAROLINA PROFESSIONAL SEAL 046048 ENGINEER BRIAN C. PHILBRICK, JR.

6/1/21

STRUCTURAL MEMBERS ONLY

SUMMIT
ENGINEERING LABORATORY TESTING
3070 HAMMOND BUSINESS PLACE,
SUITE 171, RALEIGH, NC 27603
OFFICE: 919.380.9991
FAX: 919.380.9993
WWW.SUMMIT-COMPANIES.COM

NORTH CAROLINA CERTIFICATE OF AUTHORIZATION
SUMMIT Engineering, Laboratory & Testing, Inc.
No. F-1454

PROJECT
Standard Details
Framing Details - Bracing

CLIENT
Smith Douglas Homes
110 Village Trail, Suite 215
Woodstock, GA 30188

CURRENT DRAWING
DATE: 4/29/2021
SCALE: NTS
PROJECT #: 3832-R2
DRAWN BY: HDK
CHECKED BY: BCP

ORIGINAL DRAWING

NO.	DATE	PROJECT #
0	1/7/16	3832

REFER TO COVER SHEET FOR A COMPLETE LIST OF REVISIONS

SHEET
D7f

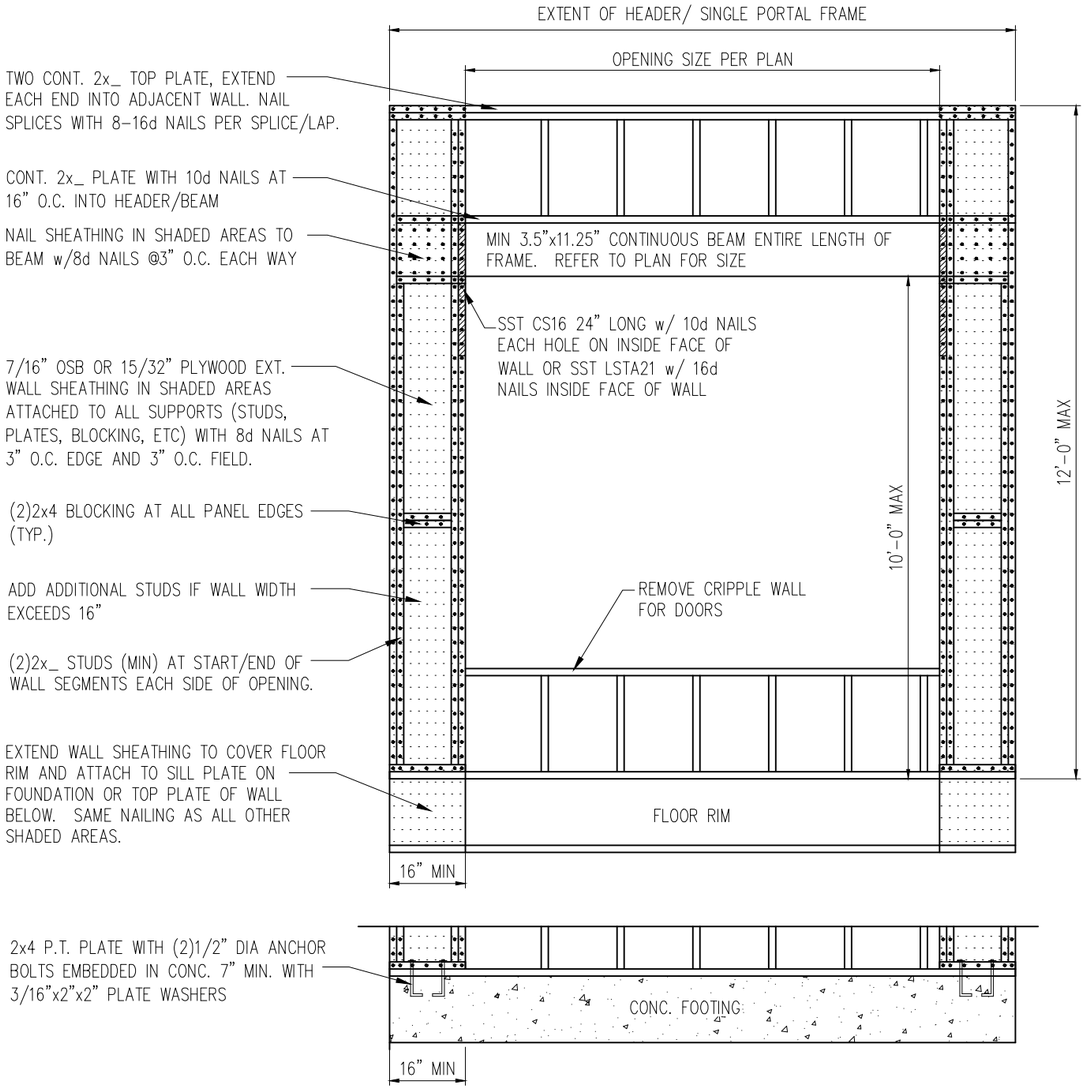

1 D8f METHOD PF: PORTAL FRAME DETAIL

3/4" = 1'-0" OPENINGS UNDER 8'-0"

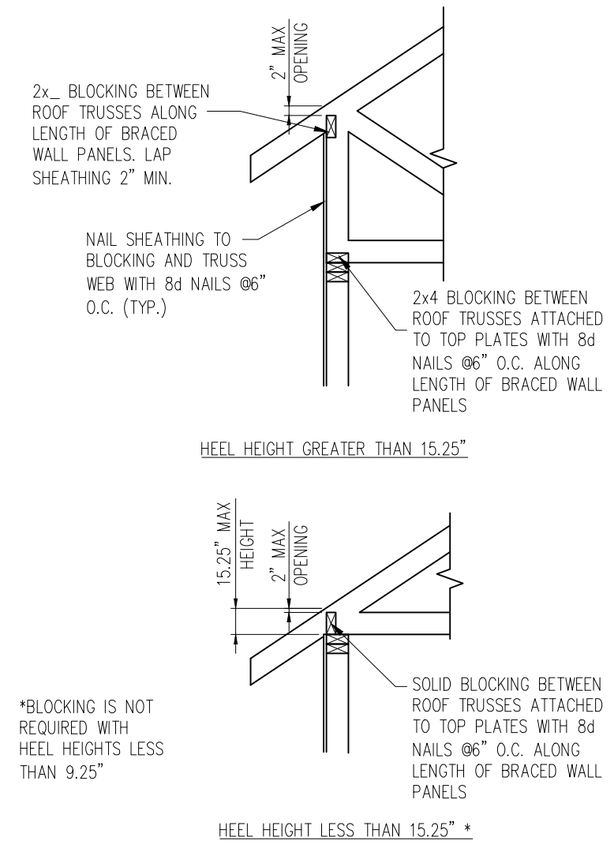

2 D8f TYP. WALL PANEL TO ROOF TRUSS CONNECTION

1" = 1'-0"

NORTH CAROLINA PROFESSIONAL SEAL 046048 ENGINEER BRIAN C. PHILBRICK, JR.

6/1/21

STRUCTURAL MEMBERS ONLY

SUMMIT
ENGINEERING LABORATORY TESTING
3070 HAMMOND BUSINESS PLACE,
SUITE 171, RALEIGH, NC 27603
OFFICE: 919.380.9991
FAX: 919.380.9993
WWW.SUMMIT-COMPANIES.COM

NORTH CAROLINA CERTIFICATE OF AUTHORIZATION
SUMMIT Engineering, Laboratory & Testing, Inc.
No. F-1454

PROJECT
Standard Details
Framing Details - Bracing

CLIENT
Smith Douglas Homes
110 Village Trail, Suite 215
Woodstock, GA 30188

CURRENT DRAWING
DATE: 4/29/2021
SCALE: NTS
PROJECT #: 3832-R2
DRAWN BY: HDK
CHECKED BY: BCP

ORIGINAL DRAWING

NO.	DATE	PROJECT #
0	1/7/16	3832

REFER TO COVER SHEET FOR A COMPLETE LIST OF REVISIONS

SHEET
D8f

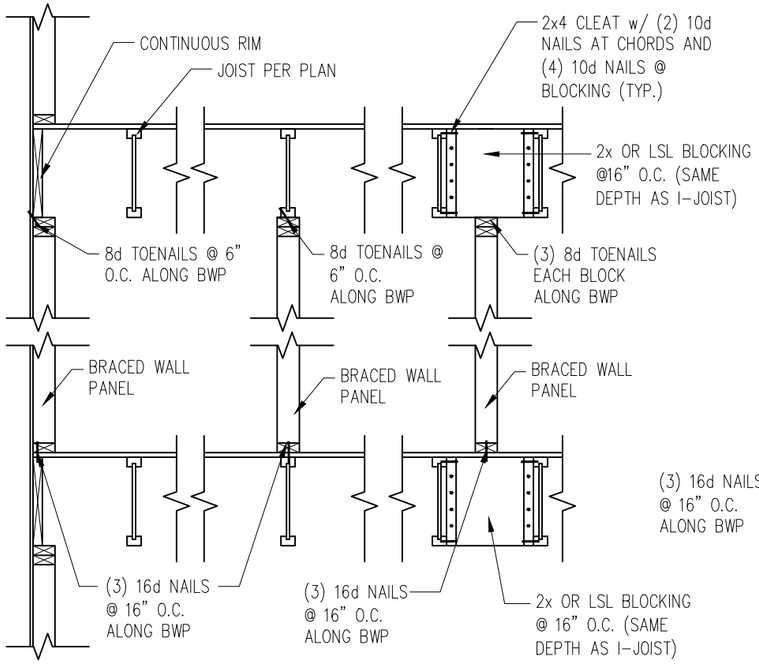

JOISTS PARALLEL TO BRACED WALLS

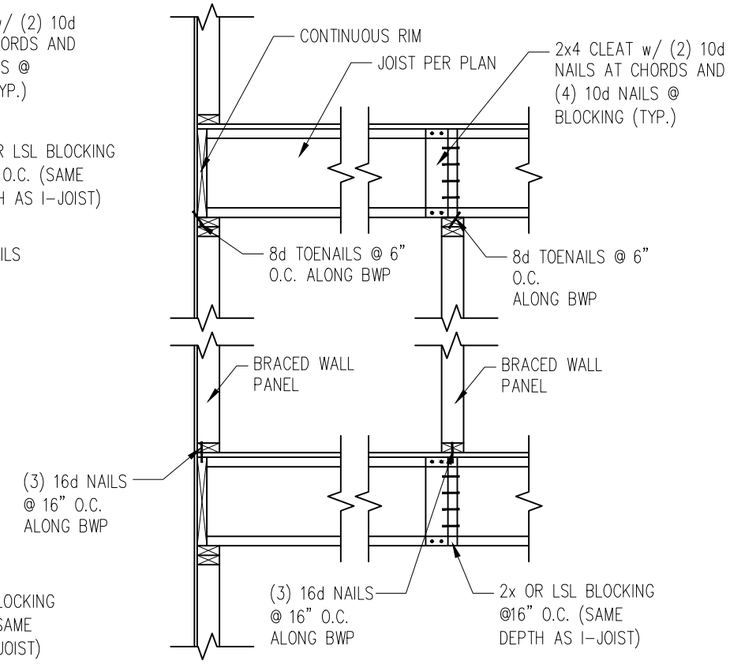

JOISTS PERPENDICULAR TO BRACED WALLS

1 D9f TYP. WALL PANEL TO FLOOR/CEILING CONNECTION

1" = 1'-0"

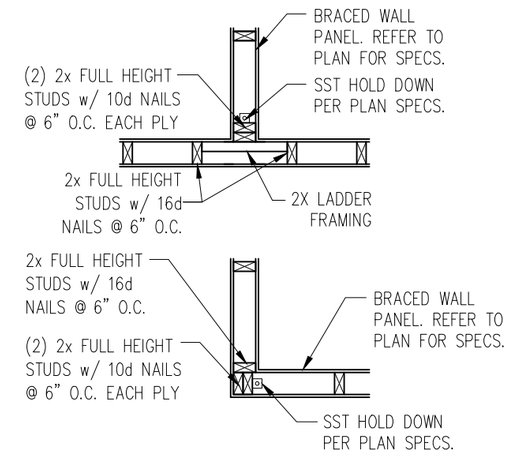

4 D9f TYP. HOLD DOWN DETAIL

1" = 1'-0"

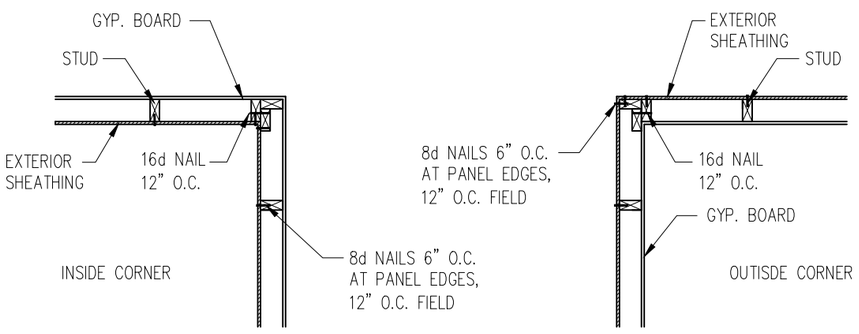

2 D9f TYP. EXTERIOR CORNER FRAMING

1" = 1'-0"

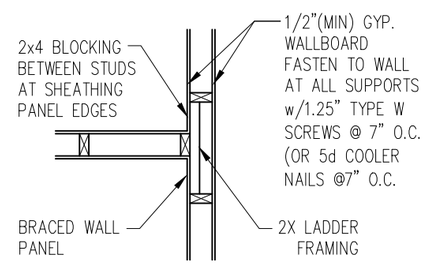

3 D9f INTERIOR 3-STUD WALL INTERSECTION

1" = 1'-0"

STRUCTURAL MEMBERS ONLY

SUMMIT
ENGINEERING LABORATORY TESTING
3070 HAMMOND BUSINESS PLACE,
SUITE 171, RALEIGH, NC 27603
OFFICE: 919.380.9991
FAX: 919.380.9993
WWW.SUMMIT-COMPANIES.COM

NORTH CAROLINA CERTIFICATE OF AUTHORIZATION
SUMMIT Engineering, Laboratory & Testing, Inc.
No. F-1454

PROJECT
Standard Details
Framing Details - Bracing

CLIENT
Smith Douglas Homes
110 Village Trail, Suite 215
Woodstock, GA 30188

CURRENT DRAWING
DATE: 4/29/2021
SCALE: NTS
PROJECT #: 3832-R2
DRAWN BY: HDK
CHECKED BY: BCP

ORIGINAL DRAWING

NO.	DATE	PROJECT #
0	1/7/16	3832

REFER TO COVER SHEET FOR A COMPLETE LIST OF REVISIONS

NORTH CAROLINA PROFESSIONAL SEAL 046048 ENGINEER BRIAN C. PHILBRICK, JR.
6/1/21

SHEET
D9f

72509252 15 CEDAR POINTE

FOXCROFT CFI

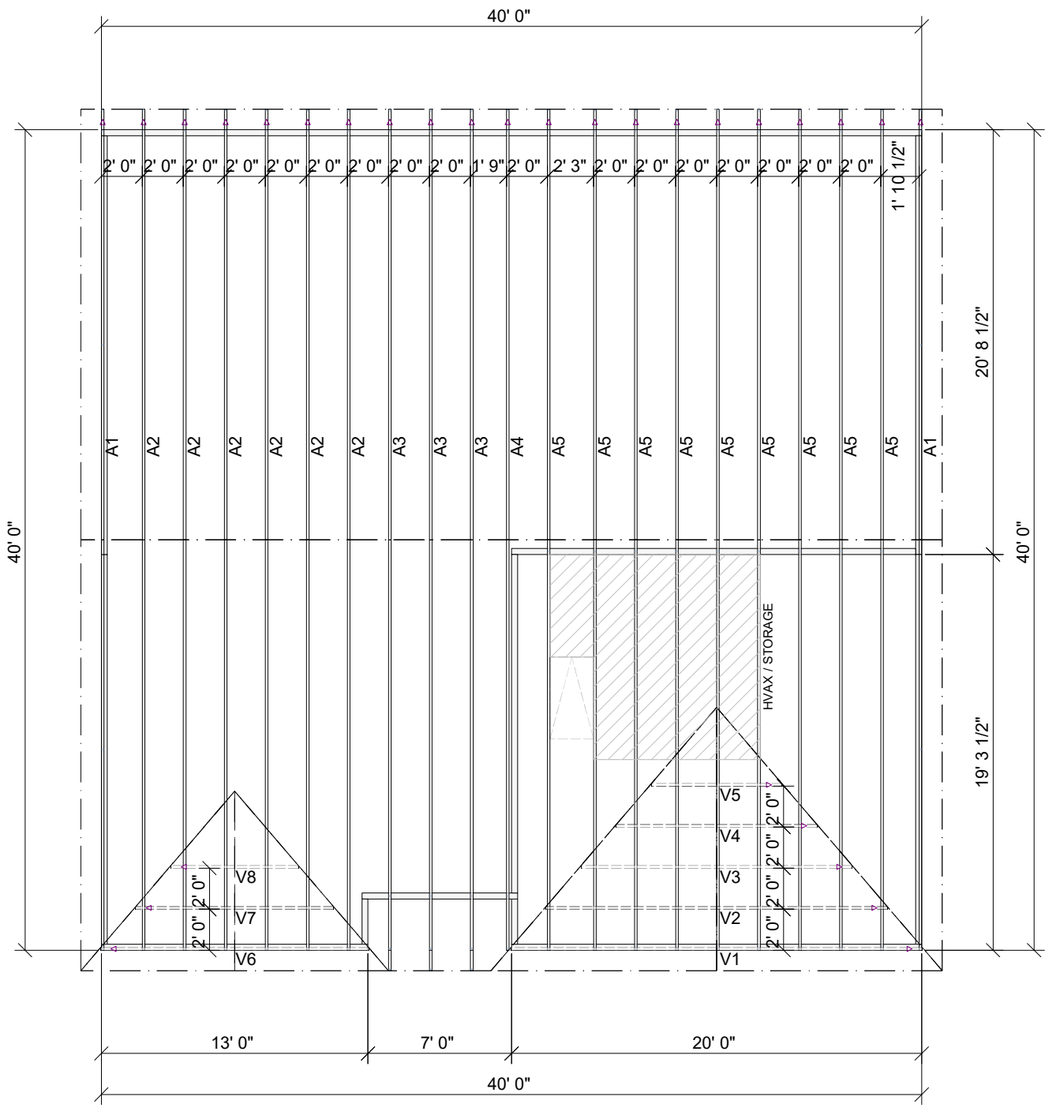

THIS IS A TRUSS PLACEMENT DIAGRAM (TPD) ONLY: NOT AN ENGINEERED DOCUMENT. Trusses are designed as individual building components to be incorporated into the building design at the specification of the building designer. See individual truss design drawings (TDD's) for each truss design identified on the TPD. The Contractor is responsible for the temporary bracing of the roof and floor system, and requirements for the permanent restraint/bracing of truss systems may be met by following the methods outlined in ANSI-TPI 1-2014 - 2.3.3. The design of the support structure including but not limited to headers, beams, walls, and columns is also the responsibility of the building designer. For general guidance regarding installation and bracing, consult "Building Component Safety Information" (BCSI) available from the SBC Association (www.sbcacomponents.com). It is the responsibility of the General Contractor to verify that the provided component layout matches the final intended construction plans, loading conditions, and use. If they do not, it is the responsibility of the General Contractor to notify UFP and provide plans containing the latest specifications and designs. UFP will not be responsible for plan changes by others after final approval of shop drawings, or for errors or modifications made on-site during construction. DO NOT CUT, NOTCH, DRILL, OR OTHERWISE "REPAIR" MANUFACTURED TRUSSES IN ANY WAY WITHOUT PRIOR WRITTEN AUTHORIZATION BY A LICENSED PROFESSIONAL DESIGNATED BY UFP. The Framer is responsible to verify all dimensions, including adjusting member spacing within tolerances to allow for the drop and rise of plumbing/HVAC, unless noted otherwise. Truss-to-wall connections, if shown, are for uplift only and do not consider lateral loads. All connectors on this project are to be installed per the connector manufacturer's specifications. All connectors shown that are not truss-to-truss are suggestions only and are to be verified by the Building Designer or Engineer of Record for suitability to this particular project. UFP accepts no responsibility for the specific application or suitability of any connector that is not truss-to-truss as they apply to this specific structure.

ROOF PLACEMENT PLAN

△ **INDICATES LEFT END OF TRUSS** **SCALE:** N.T.S

ROOF AREA: 1980.42 sqft | **RIDGE LINE:** 63.58 ft | **VALLEY LINES:** 60.81 ft | **HIP LINES:** 0 ft

THESE VALUES ARE APPROXIMATE ONLY

FOXCROFT CFI

SMITH DOUGLAS

REVISIONS		
DATE	DESCRIPTION	DSN
-	-	-
-	-	-
-	-	-
-	-	-
-	-	-
-	-	-
-	-	-
-	-	-

DESIGNER AG
LAYOUT DATE 4-3-25
ARCH DATE -
STRUC DATE -
JOB #: MASTER

This drawing is property of UFP Site Built, LLC. Any unauthorized use of this document without written permission is prohibited. UFP relinquishes ownership of delivered product upon delivery. Owner of product must obtain UFP's authorization prior to any alteration or modification of product; UFP will not be held responsible for any unauthorized modifications done or costs incurred without prior written authorization from UFP.

TRUSSTRAX UFP CONSTRUCTION

TrussTrax.ufpi.com

UFP SITE BUILT
A UFP INDUSTRIES COMPANY

Burlington, NC
Chesapeake, VA
Clinton, NC
Conway, SC
Jefferson, GA
Locust, NC
Liberty, NC
Ooltewah, TN
Pearisburg, VA
Stanfield, NC

Customer Service (800) 476-9356