- PLANS TO BE DESIGNED UNDER 2018 NORTH CAROLINA RESIDENTIAL CODE.
- HOUSE DESIGNED FOR 115 MPH 3 SECOND GUST (89 FASTEST WIND) , EXPOSURE B
- ANCHOR BOLTS SHALL BE MIN. 1/2" DIAMETER & SHALL EXTEND A MINIMUM 7" INTO MASONRY OR CONCRETE
- ANCHOR BOLTS TO BE NO MORE THAN 6' O.C. AND WITHIN 12" OF THE CORNER
- WALL BRACING IS REQUIRED . DESIGNER MUST SPECIFY METHOD OF BRACING PER SECTION R602 (NC 2018 RESIDENTIAL BUILDING CODE) AND PROVIDE DETAIL

MEAN ROOF HEIGHT = < 30'-0"

COMPONENT & CLADDING DESIGNED FOR THE FOLLOWING LOADS

MEAN ROOF HEIGHT	UP TO 30'	30'-1" - 35'	35'-1" - 40'	40'-1" - 45'
ZONE 1	16.5, -18.0	17.3, -18.9	18.0, -19.6	18.5, -20.2
ZONE 2	16.5, -21.0	17.3, -22.1	18.0, -22.9	18.5, -23.5
ZONE 3	16.5, -21.0	17.3, -22.1	18.0, -22.9	18.5, -23.5
ZONE 4	18.0, -19.5	18.9, -20.5	19.6, -21.3	20.2, -21.8
ZONE 5	18.0, -24.1	18.9, -25.3	19.6, -26.3	20.2, -27.0

MINIMUM VALUES FOR ENERGY COMPLIANCE:

ZONE 4
MAX GLAZING U-FACTOR = 0.35
CEILING R-38 WALLS R-15 FLOORS R-19

NOTE: PLANS DESIGNED UNDER 2018 NORTH CAROLINA RESIDENTIAL CODE.

FRONT ELEVATION

SCALE: 1/4"=1'-0"

LIST OF ABBREVIATIONS

CLG. : CEILING
HGT. : HEIGHT
D.O. : DOUBLE OVEN
WD. : WOOD
CONT.:CONTINUOUS
CONC. : CONCRETE
COL. : COLUMN
ELLIP. : ELLIPSE
W/ : WITH
TRANS. : TRANSOM
CANT. : CANTILEVER
M.O. : MASONRY OPENING
5S= 5 SHELVES
1R/1S = 1 ROD AND 1 SHELF
2R/2S =2 RODS AND 2 SHELVES
SD= SMOKE DETECTOR
CMD= CARBON MONOXIDE DETECTOR
ABV. : ABOVE
C.O. : CASED OPENING
REFG. : REFRIGERATOR
D.W. : DISHWASHER
T.B.D.: TO BE DETERMINED
W.I.C. : WALK IN CLOSET
W : WASHER
D : DRYER
SHWR. : SHOWER
DN. : DOWN
K.S. : KNEE SPACE
TYP. : TYPICAL

GENERAL PLAN NOTES

1.) SEE CHAPTER 6 OF 2018 NCRC FOR WALL CONSTRUCTION.

2.) TEMPERED GLASS TO BE USED AT ALL SAFETY REQUIRED LOCATIONS ACCORDING TO 2018 NCRC SECTION R308.4.

3.) DWELLING/GARAGE FIRE SEPARATION SHALL PER TABLE 302.6 OF 2018 NCRC.

4.) ALL HABITABLE ROOMS SHALL MEET LIGHT/VENTILATION & EGRESS AS REQUIRED IN 2018 NCRC SECTIONS R303.1 AND R310

5.) ALL ANGLED WALLS ARE 45° UNLESS NOTED OTHERWISE.

6.) VERIFY ALL WINDOW SIZES, RADIUS, AND DETAILS WITH CHOSEN MANUFACTURE.

7.) LOCATE DORMER FACE TO ALLOW 6" MIN. BELOW WINDOW FRAME.

8.) FLOOR PLAN NOTATIONS GOVERN OVER ELEVATION SCALE.

9.) ALL CABINET DESIGNS/LAYOUTS TO BE VERIFIED WITH OWNER VIA SHOP DRAWINGS FROM CABINET MANUF.

10.) ALL FLOOR COVERINGS AND FINISHES BY OWNER/ BLDR. COORDINATE HEIGHTS DUE TO THICKNESS CHANGES.

11.) ALL WINDOW GLAZING TO HAVE 0.32 U-FACTOR MIN. SEE TABLE E-4A, E-4B

12.) FINISHES OF SCREEN PORCH COLUMNS,RAILS, FLOORS , CEILINGS ;SCREEN DOOR SYSTEM,AND DOOR TO PORCH BY BLDR. & OWNER, PER CONTRACT SPECIFICATIONS

13.) FINISHES FOR CLOSET SHELVING AND ROD BY BLDR. & OWNER, PER CONTRACT SPECIFICATIONS

14.) FINISHES OF ALL INTERIOR BASE BOARD , CLG. DETAIL / MOLDING ,OPENING DETAILS ,PASS-THRUS ,WAINSCOTTING DETAILS BY BLDR. & OWNER, PER CONTRACT SPECIFICATIONS

ACCESSORIES LEGEND

PROVIDE BLOCKING FOR:

TB = TOWEL BAR
TP = TOILET PAPER
TR = TOWEL RING
MR = MAGAZINE RACK
MC = MEDICINE CABINET

NOTE:
SELECTION BY OWNER PER BUILDER CONTRACT SPECIFICATIONS

NOTE:
-SEE ROOF PLAN FOR KNEEWALL HEIGHTS AND LOCATIONS.

-GRADE LINES ARE ASSUMED. VERIFY WITH FINAL GRADING PLAN.

AREA CALCULATIONS

HEATED (SQ. FT.)		UNHEATED (SQ. FT.)	
		GARAGE:	616
1ST FLOOR:	2547	COV. PORCH:	396
2ND FLOOR:	797	ENTRY PORCH:	104
REC ROOM:	200	DECK:	139
ATTIC:	N/A	BRICK FRONT:	30+/-
TOTAL: (HEATED)	3544	TOTAL: (UNHEATED)	1289
OVERALL DIMENSION		UNFINISHED (SQ. FT.)	
WIDTH:	64'-0"	STORAGE:	258
DEPTH:	75'-0"		

©COPYRIGHT, 2024 BY DESIGN TECH, INC. ALL RIGHTS RESERVED. NO PART OF THESE PLANS MAY BE USED, REPRODUCED, STORED IN A RETRIEVAL SYSTEM, OR TRANSMITTED IN ANY FORM BY ANY MEANS, ELECTRONIC, MECHANICAL PHOTOCOPYING,RECORDING, OR OTHERWISE WITHOUT THE PERMISSION OF DESIGN TECH INC.

CONTRACTOR SHALL VERIFY ALL CONDITIONS AND DIMENSIONS PRIOR TO CONSTRUCTION. ANY ERROR OR OMISSIONS SHALL BE REPORTED TO DESIGN TECH. CONSTRUCTION WITHOUT JUSTIFICATION, CONTRACTOR MUST COMPLY WITH ALL LOCAL BUILDING CODES WHICH HOME IS TO BE BUILT. IF NO ENGINEERING DRAWINGS ARE PROVIDED, CONTRACTOR MUST HAVE STRUCTURAL DRAWINGS FOR STRUCTURAL DESIGN. ONCE CONSTRUCTION HAS STARTED, CONTRACTOR WILL ASSUME ALL RESPONSIBILITY.
PLAN HAS BEEN DESIGNED TO COMPLY WITH 2018 NCRC.

REVISIONS:

DATE:	NAME:

DRAWN BY: RKR
CHECKED BY: RKR
DATE: 3-25-25
PLAN NO. 15-3544-DT

DESIGNTECH INC.
130 WIND CHIME CT.
UNIT A
RALEIGH, NC 27615
919-239-4972
WWW.DESIGN-TECH.COM

JEFFRIES RESIDENCE

15-3544-DT

SHEET NO. 1 OF 8

COPYRIGHT 2024 BY DESIGN TECH, INC. ALL RIGHTS RESERVED. NO PART OF THESE PLANS MAY BE USED, REPRODUCED, STORED IN A RETRIEVAL SYSTEM, OR TRANSMITTED IN ANY FORM BY ANY MEANS, ELECTRONIC, MECHANICAL PHOTOCOPYING, RECORDING, OR OTHERWISE WITHOUT THE PERMISSION OF DESIGN TECH INC.

NOTE:
SEE ROOF PLAN FOR KNEEWALL HEIGHTS AND LOCATIONS.

NOTE:
GRADE LINES ARE ASSUMED. VERIFY WITH FINAL GRADING PLAN.

REAR ELEVATION

SCALE: 1/8"=1'-0"

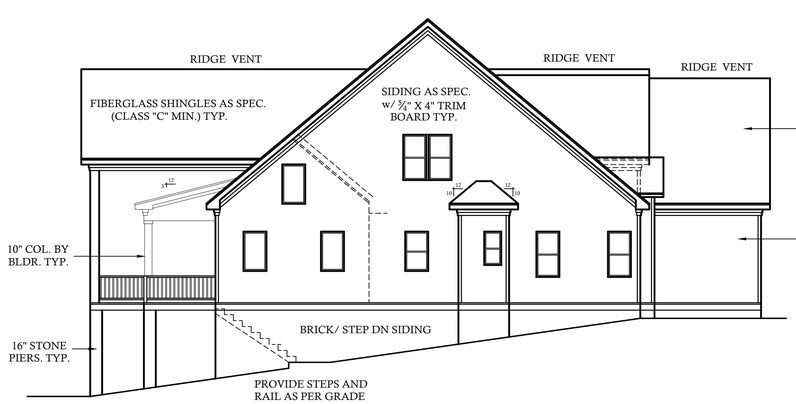

LEFT SIDE ELEVATION

SCALE: 1/8"=1'-0"

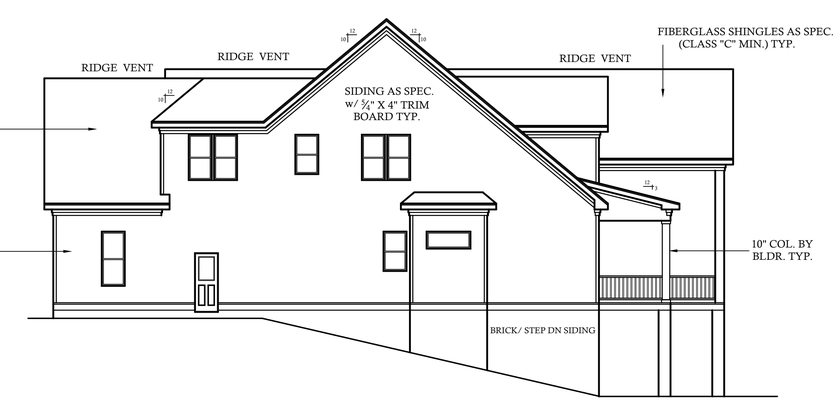

RIGHT SIDE ELEVATION

SCALE: 1/8"=1'-0"

CONTRACTOR SHALL VERIFY ALL CONDITIONS AND DIMENSIONS PRIOR TO CONSTRUCTION. ANY ERROR OR OMISSIONS SHALL BE REPORTED TO DESIGNTECH PRIOR TO CONSTRUCTION FOR JUSTIFICATION. CONTRACTOR MUST COMPLY WITH ALL LOCAL, STATE AND NATIONAL CODES. HOME IS TO BE BUILT IF NO ENGINEERING DRAWINGS ARE PROVIDED. CONTRACTOR MUST SELECT A QUALIFIED STRUCTURAL ENGINEER FOR STRUCTURAL DESIGN. ONCE CONSTRUCTION HAS STARTED, THE CONTRACTOR WILL ASSUME ALL RESPONSIBILITY. PLAN HAS BEEN DESIGNED TO COMPLY WITH 2018 IRC.

REVISIONS:

DATE:	NAME:

DRAWN BY:
RKR

CHECKED BY:
RKR

DATE:
3-25-25

PLAN NO.
15-3544-DT

DESIGNTECH INC.
130 WIND CHIME CT.
UNIT A
RALEIGH, NC 27615
919-239-4072
WWW.DESIGN-TECH.COM

JEFFRIES RESIDENCE

15-3544-DT

SHEET NO. 2 OF 8

COPYRIGHT 2024 BY DESIGN TECH, INC. ALL RIGHTS RESERVED. NO PART OF THESE PLANS MAY BE USED, REPRODUCED, STORED IN A RETRIEVAL SYSTEM, OR TRANSMITTED IN ANY FORM BY ANY MEANS, ELECTRONIC, MECHANICAL, PHOTOCOPYING, RECORDING, OR OTHERWISE WITHOUT THE PERMISSION OF DESIGNTECH, INC.

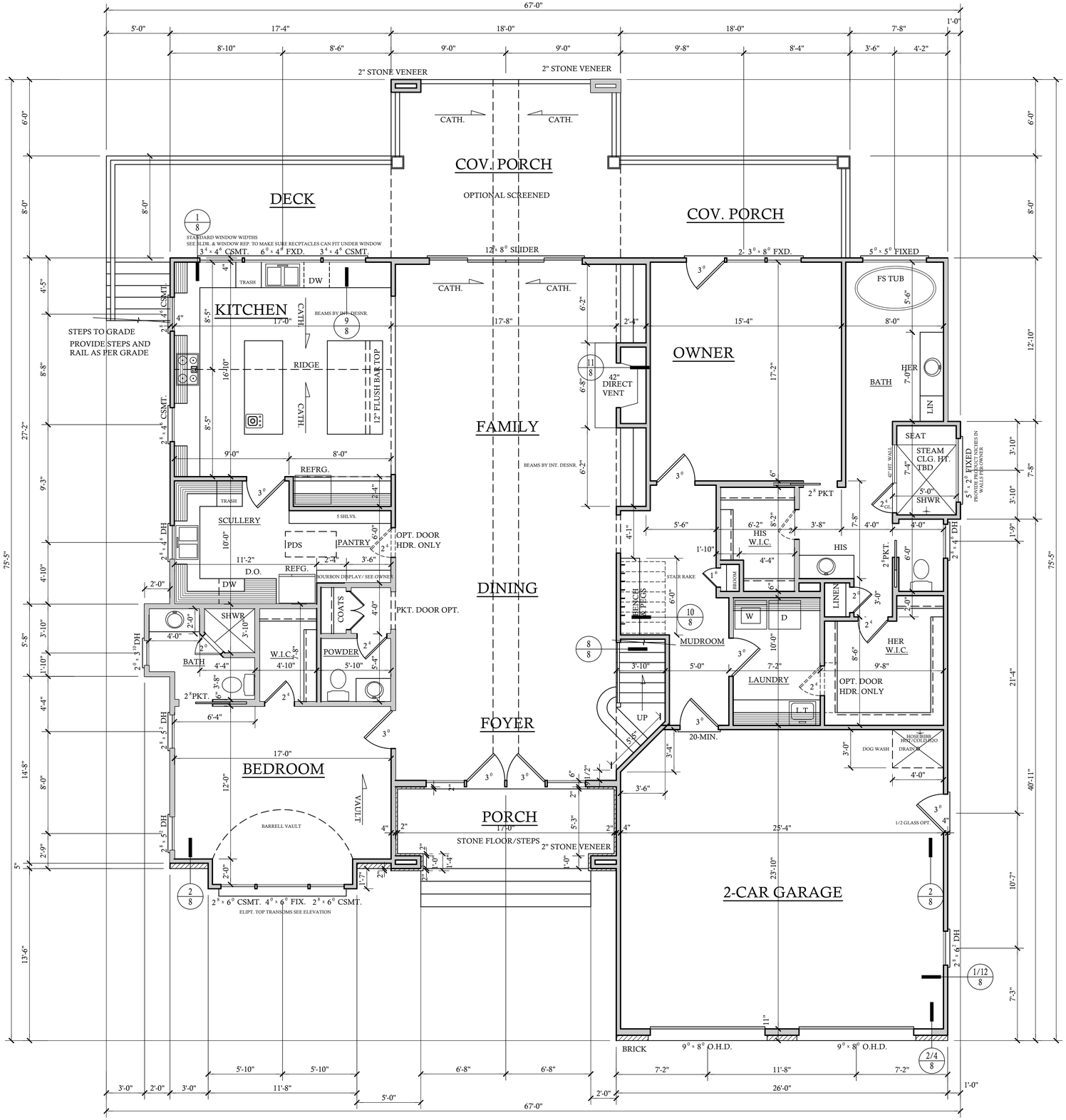

FIRST FLOOR PLAN

SCALE: 1/4"=1'-0"

10'-0" CLG. HGT. U.N.O.
SET WINDOWS @ 8'-0" U.N.O.

CONTRACTOR SHALL VERIFY ALL CONDITIONS AND DIMENSIONS PRIOR TO CONSTRUCTION. ANY ERROR OR OMISSIONS SHALL BE REPORTED TO DESIGNTECH, INC. PRIOR TO CONSTRUCTION JUSTIFICATION: CONTRACTOR MUST COMPLY WITH ALL LOCAL BUILDING CODES THAT HOME IS TO BE BUILT. IF NO ENGINEERING DRAWINGS ARE PROVIDED, CONTRACTOR MUST SELECT A LICENSED ENGINEER FOR STRUCTURAL DESIGN. ONCE CONSTRUCTION HAS STARTED, CONTRACTOR WILL ASSUME ALL RESPONSIBILITY.
PLAN HAS BEEN DESIGNED TO COMPLY WITH 2018 IRC.

REVISIONS:

DATE:	NAME:

DRAWN BY: RKR
CHECKED BY: RKR
DATE: 3-25-25
PLAN NO. 15-3544-DT

DESIGNTECH INC.
UNIT A
130 WIND CHIME CT.
RALEIGH, NC 27615
919-239-4072
WWW.DESIGNTECH.COM

JEFFRIES RESIDENCE
15-3544-DT

SHEET NO. 3 OF 8

COPYRIGHT 2024 BY DESIGN TECH, INC. ALL RIGHTS RESERVED. NO PART OF THESE PLANS MAY BE USED, REPRODUCED, STORED IN A RETRIEVAL SYSTEM, OR TRANSMITTED IN ANY FORM BY ANY MEANS: ELECTRONIC, MECHANICAL PHOTOCOPYING, RECORDING, OR OTHERWISE WITHOUT THE PERMISSION OF DESIGNTECH, INC.

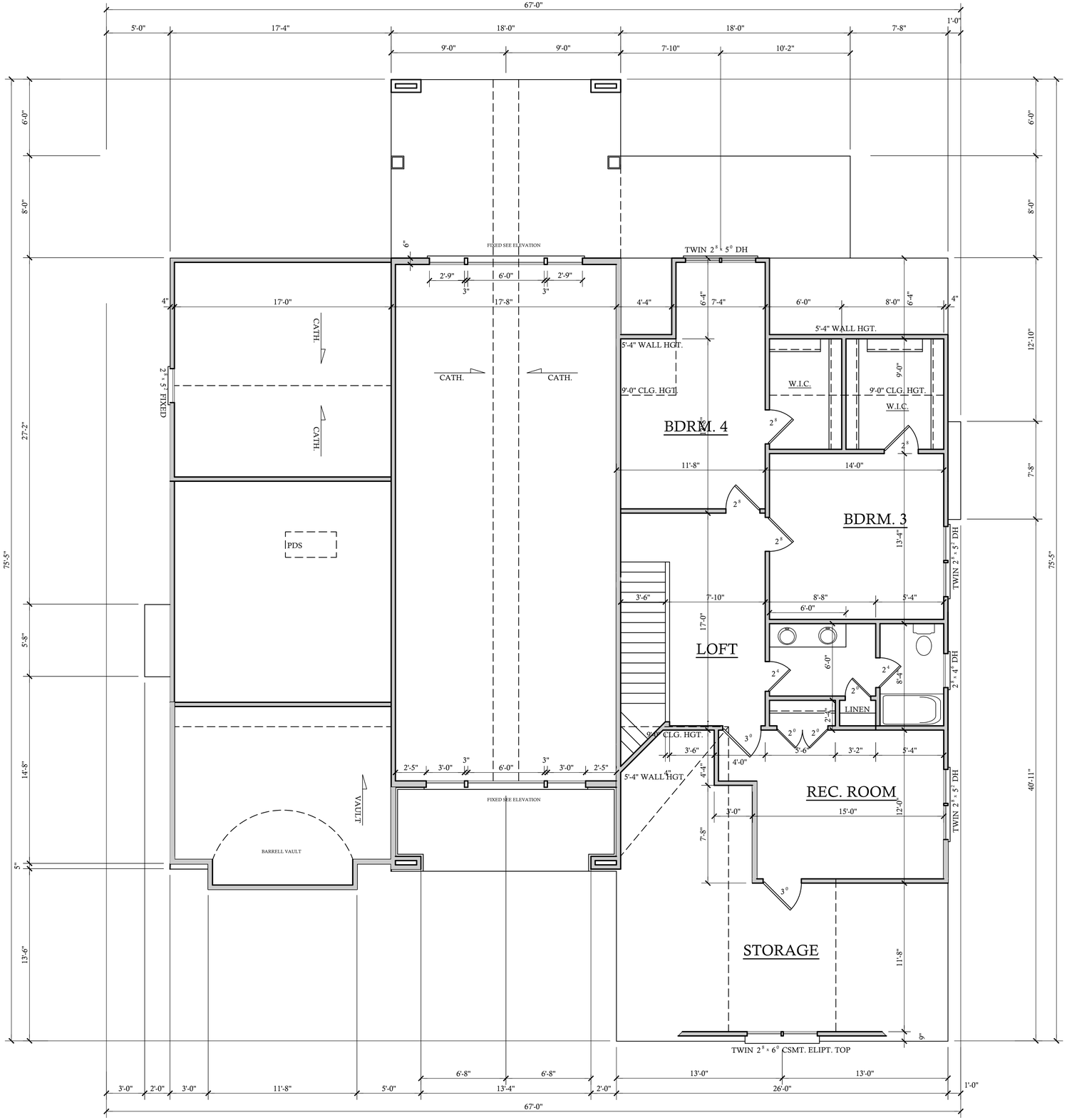

SECOND FLOOR PLAN

SCALE: 1/4"=1'-0"

9'-0" CLG. HGT. U.N.O.
SET WINDOWS @ 7'-8" U.N.O.

CONTRACTOR SHALL VERIFY ALL CONDITIONS AND DIMENSIONS PRIOR TO CONSTRUCTION. ANY ERROR OR OMISSIONS SHALL BE REPORTED TO DESIGNTECH, INC. PRIOR TO CONSTRUCTIONJUSTIFICATION. CONTRACTOR MUST COMPLY WITH ALL LOCAL BUILDING CODES WHERE HOME IS TO BE BUILT. IF NO ENGINEERING DRAWINGS ARE PROVIDED, CONTRACTOR MUST COMPLY WITH PRESCRIPTIVE CODES. STRUCTURAL DESIGN, ONCE CONSTRUCTION HAS STARTED, IS THE CONTRACTOR WILL ASSUME ALL RESPONSIBILITY.
PLAN HAS BEEN DESIGNED TO COMPLY WITH 2018 IRC.

REVISIONS:

DATE:	NAME:

DRAWN BY: RKR
CHECKED BY: RKR
DATE: 3-25-25
PLAN NO. 15-3544-DT

DESIGNTECH INC.
130 WIND CHIME CT.
UNIT A
RALEIGH, NC 27615
919-239-4972
WWW.DESIGNTECH.COM

JEFFRIES RESIDENCE
15-3544-DT

SHEET NO. 4 OF 8

COPYRIGHT©2024 BY DESIGN TECH, INC. ALL RIGHTS RESERVED. NO PART OF THESE PLANS MAY BE USED, REPRODUCED, STORED IN A RETRIEVAL SYSTEM, OR TRANSMITTED IN ANY FORM BY ANY MEANS, ELECTRONIC, MECHANICAL PHOTOCOPYING, RECORDING, OR OTHERWISE WITHOUT THE PERMISSION OF DESIGNTECH INC.

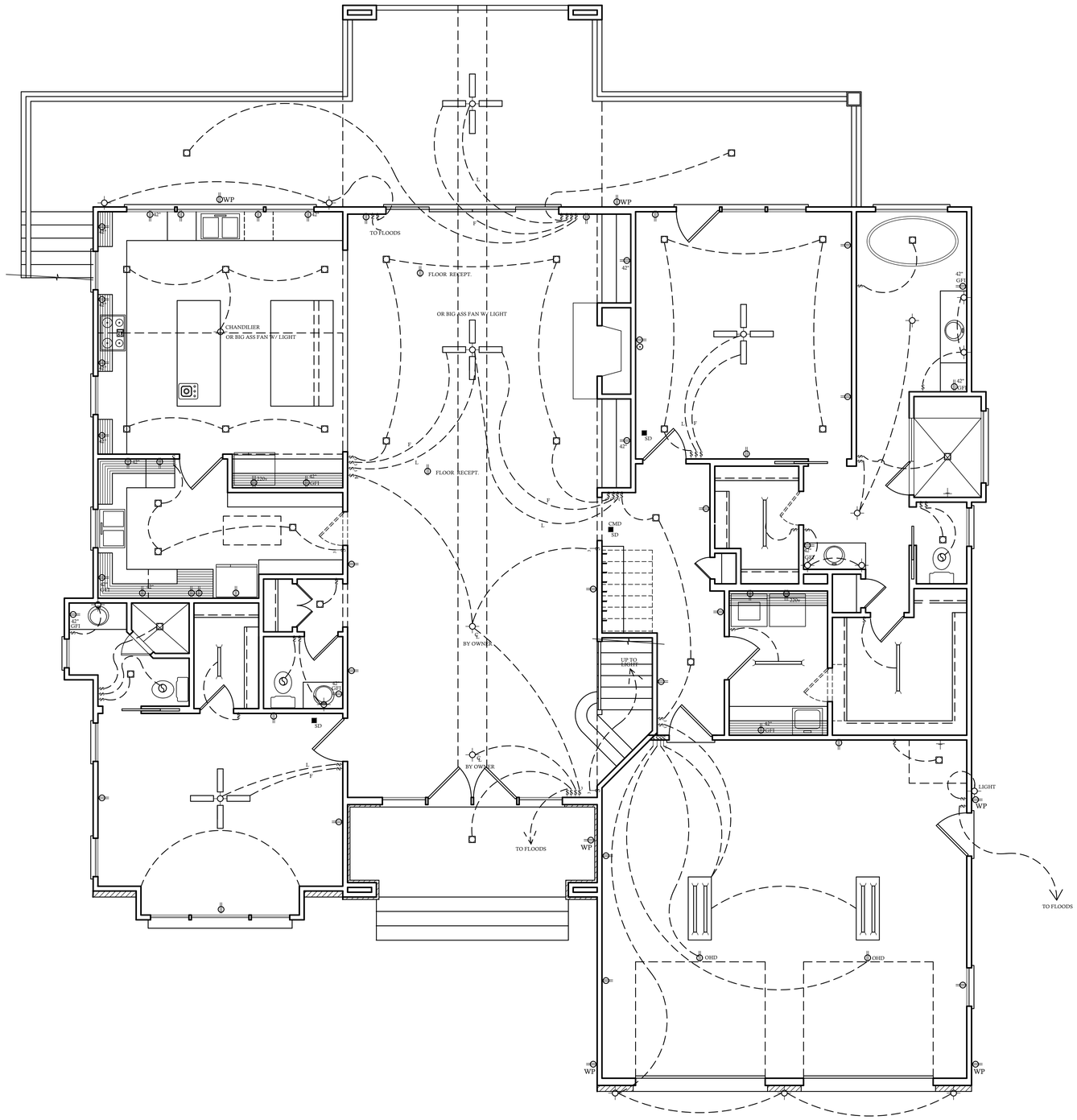

FIRST FLOOR ELECTRICAL PLAN

ELECTRICAL LEGEND

- LIGHT FIXTURE
- FAN/LIGHT
- WP WATERPROOF OUTLET
- RECESSED LIGHTING
- CAN LIGHT W/ FAN
- SINGLE SWITCH
- 3-WAY SWITCH
- 4-WAY SWITCH
- DIMMER SWITCH
- CMD CARBON MONOXIDE DETECTOR
- SD SMOKE DETECTOR
- FLOOD LIGHTS
- EYEBALL SPOTS
- DUPLEX RECEPTACLE (110V)
- 220 VOLT RECEPTACLE
- SWITCHED RECEPTACLE (TOP WIRE ONLY)
- GFI GROUND FAULT CIRCUIT INTERRUPTOR
- CLG FAN/LIGHTS
- TRACK LIGHTS
- FLUORESCENT/LED LIGHTING
- CABLE OUTLET
- TELEPHONE OUTLET
- COMPUTER DATA OUTLET
- INTERCOM

NOTE:
ALL ELECTRICAL INSTALLATIONS SHALL BE IN ACCORDANCE WITH THE NEC.

ELECTRICAL NOTES:

1. THE ELECTRICAL DIAGRAMS SHOWN ON THESE PLANS ARE TO BE USED AS A GUIDE. HOME OWNER AND BUILDER ARE REQUIRED TO REVIEW AND CONFIRM WITH LICENSED ELECTRICAL CONTRACTOR THESE CONTENTS PRIOR TO ROUGH-IN FOR CODE COMPLIANCE AND SPECIAL REQUIREMENTS BY THE HOME OWNER. ONCE CONSTRUCTION BEGINS, IT IS THE RESPONSIBILITY OF THE CONTRACTOR, NOT DESIGN TECH, INCORPORATED.
2. SEE ELECTRICIAN, BUILDER, AND OWNER FOR POSSIBLE GENERATOR LOCATION, SWITCHES, RECEPTACLES, AND ATTACHMENTS. COORDINATE SIZE AND MODEL OF GENERATOR TO HANDLE LOADS ADEQUATELY.
3. UNDER-CABINET COUNTER LIGHTING FOR KITCHEN IS OPTIONAL. PLEASE CONFIRM WITH CABINET MAKER AND ELECTRICIAN.
4. ELECTRICAL FOR EXTERIOR LANDSCAPE LIGHTING AND POOL EQUIPMENT BY BUILDER AS PER CODE.
5. IT IS AN OPTION FOR EVERY TOP RECEPTACLE AT FRONT WINDOWS TO BE ON ONE SWITCH LOCATED BY OWNER/ BUILDER FOR WINDOW DECORATION LIGHTING.
6. CLOSET LIGHTING TO BE CONTROLLED BY SWITCH AS SHOWN OR IN-JAMB SWITCH WHICH WOULD ILLUMINATE LIGHT WHEN DOOR IS OPENED. SOME ELECTRICAL PLANS MAY OR MAY NOT SHOW CLOSET LIGHTING. SEE OWNER AND CONFIRM WITH BUILDER.
7. EXHAUST FANS ARE REQUIRED IN BATHROOMS WITHOUT NATURAL VENTILATION. OUR PLANS WILL ALWAYS SHOW EXHAUST FAN.
8. NO HEAT LAMPS OR HEATERS MAY BE SHOWN IN THIS DRAWING. PLEASE CONFIRM WITH BUILDER FOR PRESENCE AND LOCATION.
9. ALL SLEEPING AREAS/BEDROOMS SHOULD CONTAIN SMOKE DETECTORS. SOME CORRIDORS ALSO REQUIRE SMOKE DETECTORS. PLEASE SEE LOCAL, STATE, AND FEDERAL BUILDING CODES TO CONFIRM THESE REQUIREMENTS.
10. PANEL BOX LOCATION BY ELECTRICIAN/BUILDER AS PER CODE.

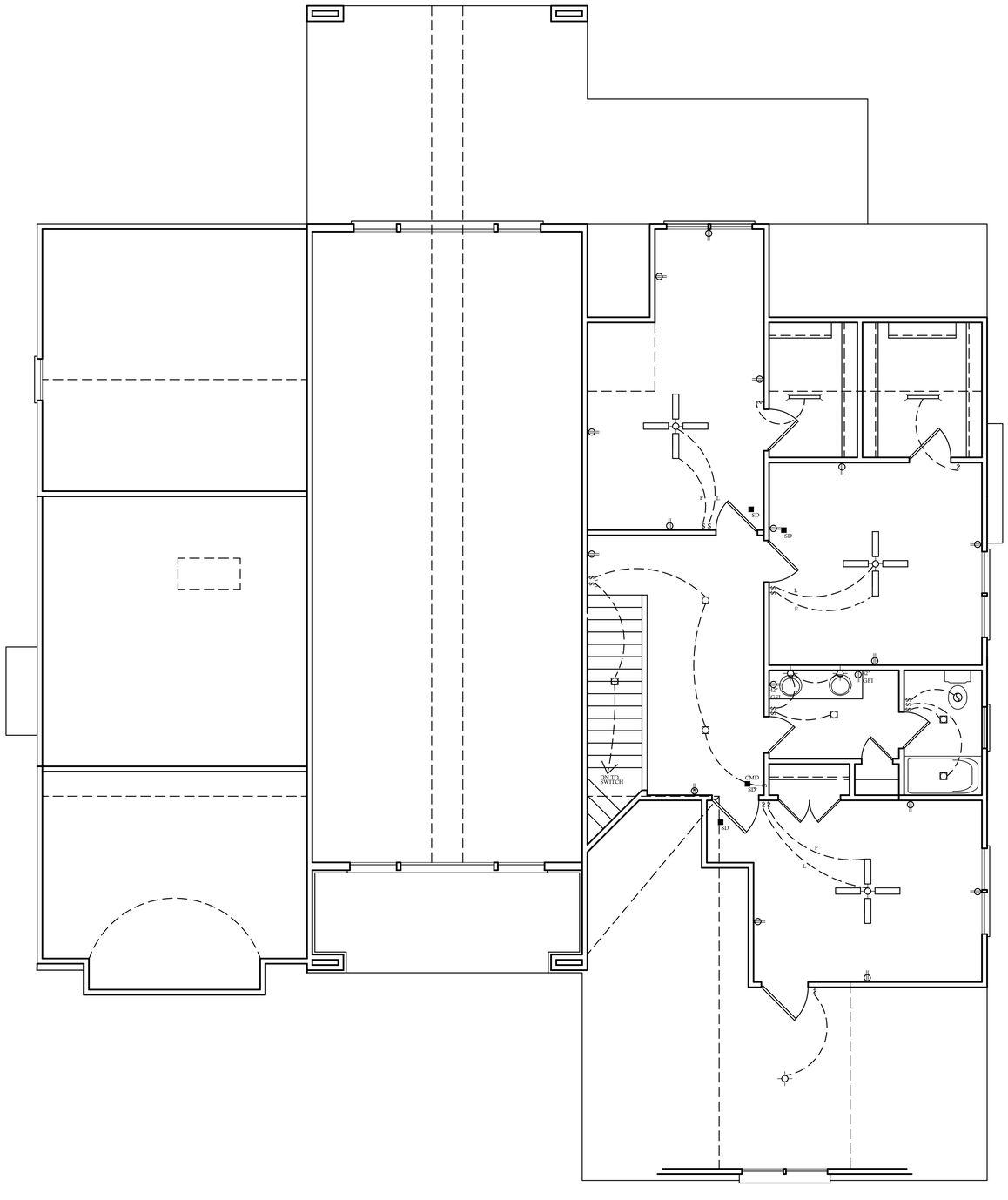

ELECTRICAL LEGEND

- LIGHT FIXTURE
- FAN/LIGHT
- WP WATERPROOF OUTLET
- RECESSED LIGHTING
- CAN LIGHT W/ FAN
- $ SINGLE SWITCH
- $3 3-WAY SWITCH
- $4 4-WAY SWITCH
- $D DIMMER SWITCH
- CMD CARBON MONOXIDE DETECTOR
- SD SMOKE DETECTOR
- FLOOD LIGHTS
- EYEBALL SPOTS
- DUPLEX RECEPTACLE (110V)
- 220 VOLT RECEPTACLE
- SWITCHED RECEPTACLE (TOP WIRE ONLY)
- GFI GROUND FAULT CIRCUIT INTERRUPTOR
- CLG FAN/LIGHTS
- TRACK LIGHTS
- FLUORESCENT/LED LIGHTING
- CABLE OUTLET
- TELEPHONE OUTLET
- COMPUTER DATA OUTLET
- INTERCOM

NOTE:
ALL ELECTRICAL INSTALLATIONS SHALL BE IN ACCORDANCE WITH THE NEC.

ELECTRICAL NOTES:

1. THE ELECTRICAL DIAGRAMS SHOWN ON THESE PLANS ARE TO BE USED AS A GUIDE. HOME OWNER AND BUILDER ARE REQUIRED TO REVIEW AND CONFIRM WITH LICENSED ELECTRICAL CONTRACTOR THESE CONTENTS PRIOR TO ROUGH-IN FOR CODE COMPLIANCE AND SPECIAL REQUIREMENTS BY THE HOME OWNER. ONCE CONSTRUCTION BEGINS, IT IS THE RESPONSIBILITY OF THE CONTRACTOR, NOT DESIGN TECH, INCORPORATED.
2. SEE ELECTRICIAN, BUILDER, AND OWNER FOR POSSIBLE GENERATOR LOCATION, SWITCHES, RECEPTACLES, AND ATTACHMENTS. COORDINATE SIZE AND MODEL OF GENERATOR TO HANDLE LOADS ADEQUATELY.
3. UNDER-CABINET COUNTER LIGHTING FOR KITCHEN IS OPTIONAL. PLEASE CONFIRM WITH CABINET MAKER AND ELECTRICIAN.
4. ELECTRICAL FOR EXTERIOR LANDSCAPE LIGHTING AND POOL EQUIPMENT BY BUILDER AS PER CODE.
5. IT IS AN OPTION FOR EVERY TOP RECEPTACLE AT FRONT WINDOWS TO BE ON ONE SWITCH LOCATED BY OWNER/ BUILDER FOR WINDOW DECORATION LIGHTING.
6. CLOSET LIGHTING TO BE CONTROLLED BY SWITCH AS SHOWN OR IN-JAMB SWITCH WHICH WOULD ILLUMINATE LIGHT WHEN DOOR IS OPENED. SOME ELECTRICAL PLANS MAY OR MAY NOT SHOW CLOSET LIGHTING. SEE OWNER AND CONFIRM WITH BUILDER.
7. EXHAUST FANS ARE REQUIRED IN BATHROOMS WITHOUT NATURAL VENTILATION. OUR PLANS WILL ALWAYS SHOW EXHAUST FAN.
8. NO HEAT LAMPS OR HEATERS MAY BE SHOWN IN THIS DRAWING. PLEASE CONFIRM WITH BUILDER FOR PRESENCE AND LOCATION.
9. ALL SLEEPING AREAS/BEDROOMS SHOULD CONTAIN SMOKE DETECTORS. SOME CORRIDORS ALSO REQUIRE SMOKE DETECTORS. PLEASE SEE LOCAL, STATE, AND FEDERAL BUILDING CODES TO CONFIRM THESE REQUIREMENTS.
10. PANEL BOX LOCATION BY ELECTRICIAN/BUILDER AS PER CODE.

SECOND FLOOR ELECTRICAL PLAN

MATERIAL REFERENCE

1. CONT. POURED CONC. FOOTING
2. 4 X 8 X 16 C.M.U.
3. 6 X 8 X 16 C.M.U.
4. 8 X 8 X 16 C.M.U.
5. 12 X 8 X 16 C.M.U.
6. BRICK
7. SOLID MASONRY CAP
8. 4" CONCRETE SLAB
9. 6 MIL VAPOR BARRIER
10. 4" STONE BASE
11. 6" X 6" 10-10 W.W.M.
12. 2 X 4 TREATED SILL PLATE
13. 2 X 6 TREATED SILL PLATE
14. 2 X 6 JOIST
15. 2 X 6 BAND
16. 2 X 8 JOIST
17. 2 X 8 BAND
18. 2 X 10 JOIST
19. 2 X 10 BAND
20. A.P.A. RATED SUB-FLOOR
21. A.P.A. RATED UNDERLAYMENT
22. 2 X 4 SOLE PLATE
23. 2 X 4 STUD WALL
24. DBL 2 X 4 TOP PLATE
25. 2 X 6 SOLE PLATE
26. 2 X 6 STUD WALL
27. DBL 2 X 6 TOP PLATE
28. EXTERIOR SHEATHING
29. SHEATHING PAPER
30. 1/2" DRY WALL
31. R-15 BATT INSULATION MIN.
32. BRICK VENEER
33. WALL TIE
34. WEEP HOLES @ 16" O.C. HORZ.
35. FLASHING AS REQ. PER CODE
36. SELF FURRING GALV METAL LATH
37. METAL BEAD
38. STUCCO PLASTER
39. SIDING AS SPECIFIED
40. TPL 2 X BLOCKING
41. WOOD FILLER
42. 1 X FRIEZE BOARD
43. NAILER
44. LOOKOUT
45. 3/8" EXT PLYWOOD SOFFIT
46. SOFFIT VENT
47. SUB FASCIA
48. 1 X FASCIA
49. METAL DRIP STRIP
50. SHINGLES AS SPECIFIED
51. 15 LB. FELT PAPER
52. A.P.A. RATED SHEATHING
53. 2 X 8 RAFTER
54. 2 X 6 RAFTER
55. R-38 BATT INSULATION MIN.
56. C.M.U. PIER
57. TREATED 2 X 6 SHIM PLATE
58. GIRDER SIZE PER PLAN
59. 2 X 2 LEDGER BOARD
60. 1/2" EXPANSION JOINT
61. 1 1/2" RIGID INSULATION (R 5.0 MIN)
62. WATERPROOFING
63. 4" PERFORATED DRAIN TILE (SLOPE TO DRAIN)
64. CRUSHED STONE W/ INFILTRATION BARRIER ABOVE
65. CONC. WASH
66. 2 X 4 RAFTER TIE BACKS PER ENG SPECS. AT MIN EVERY THIRD RAFTER
67. SEE STRUCTURAL SHEETS FOR FOR JOIST DIRECTION & SIZES
68. R-19 BATT INSULATION (MIN.)
69. POURED CONC. FND. WALL
70. OPT. TRIM SEE BLDR.
71. STONE VENEER
72. TRUSSES PER MANUFACTURER
73. STUCCO DRIP CAP
74. STUCCO ON CMU OR CONCRETE WALL
75. BAND W/ DRIP CAP
76. SOFFIT BED MOLD TRIM
77. 2 X 8 TREATED SILL PLATE
78. 2 X 12 JOIST
79. 2 X 12 BAND
80. 66 MIL. OF THRU WALL FLASHING

BRICK
CONC. MASONRY UNIT
CONCRETE
STEEL
EARTH
BATT INSULATION
RIGID INSULATION
STUCCO
WOOD
STONE
GRAVEL BED
WELDED WIRE MESH
DETAIL NUMBER / SHEET NUMBER
INT ELEV LETTER
INT ELEV NUMBER / SHEET NUMBER
SECTION NUMBER / SHEET NUMBER
12 ROOF PITCH RATIO
101 ROOM NUMBER

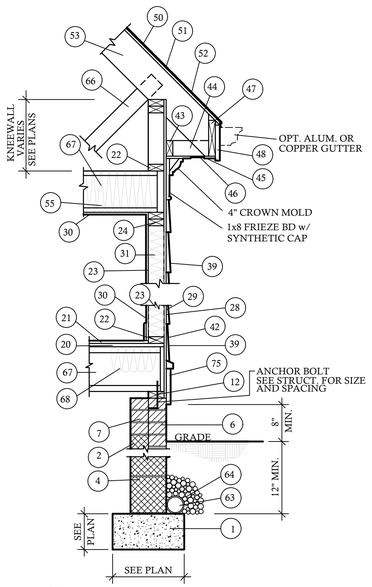

1 ONE STORY WALL W/ SIDING @ 3/4"=1'-0"
PROPERTY OF DESIGN TECH INC.
DESIGNED FOR 115 MPH WINDS

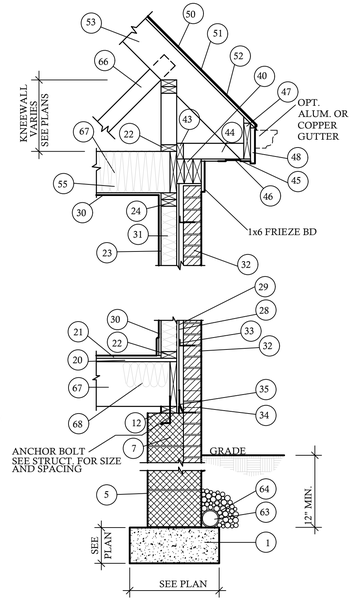

2 ONE STORY WALL W/ BRICK @ 3/4"=1'-0"
PROPERTY OF DESIGN TECH INC.
DESIGNED FOR 115 MPH WINDS

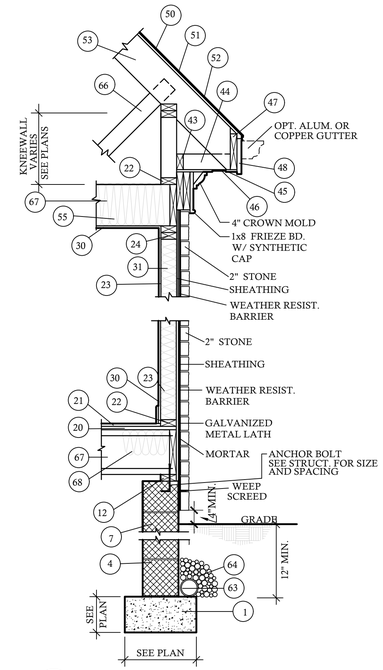

3 ONE STORY WALL W/ 2" STONE @ 3/4"=1'-0"
PROPERTY OF DESIGN TECH INC.
PLANS DESIGNED FOR 115 MPH WIND ZONE

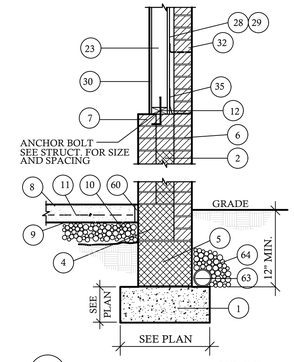

4 GARAGE WALL W/ BRICK @ 3/4"=1'-0"
DESIGNED FOR 115 MPH WINDS

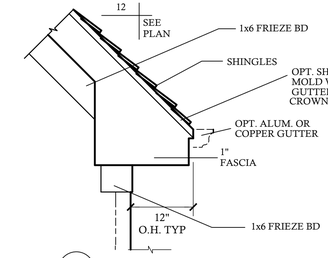

5 BOXING DETAIL @ 3/4"=1'-0"
PROPERTY OF DESIGN TECH INC.

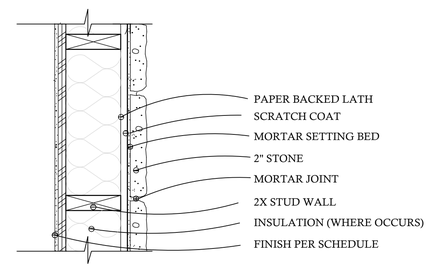

6 INSTALLATION OVER OPEN STUD FRAMING
N.T.S.

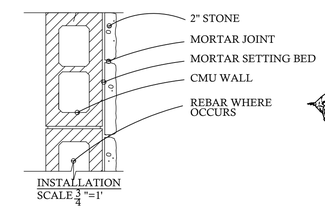

7 INSTALLATION ON CMU WALL
N.T.S.

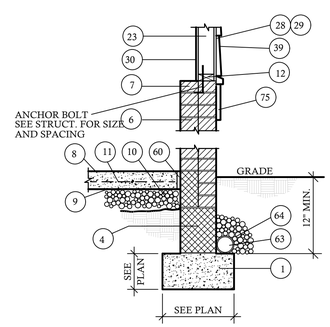

12 GARAGE WALL W/ SIDING @ 3/4"=1'-0"
PROPERTY OF DESIGN TECH INC.
DESIGNED FOR 115 MPH

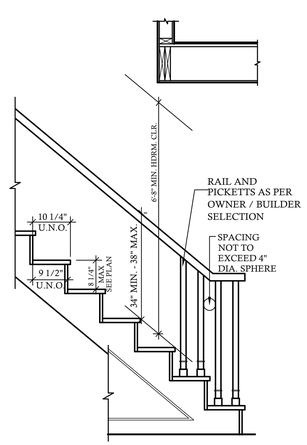

8 TYP. STAIR DETAIL @ 3/4"=1'-0"
PROPERTY OF DESIGN TECH INC.

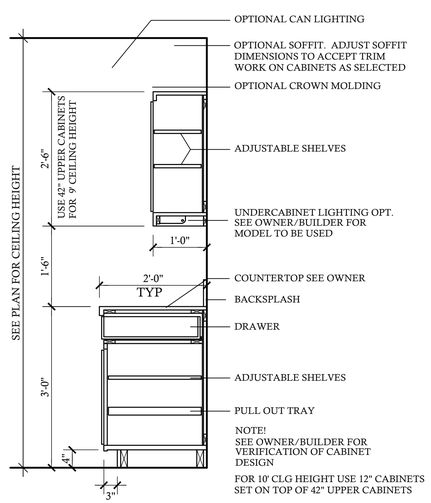

9 TYP. KITCHEN CABINET SECTION @ 3/4"=1'-0"
PROPERTY OF DESIGN TECH INC.

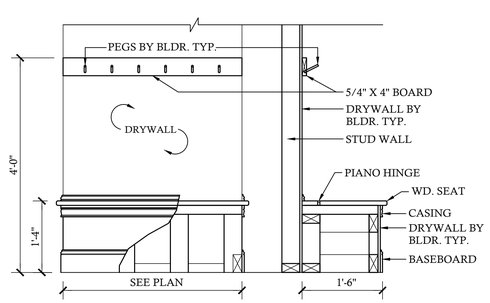

10 TYP. BENCH & PEGS SECTION @ 3/4"=1'-0"
PROPERTY OF DESIGN TECH INC.

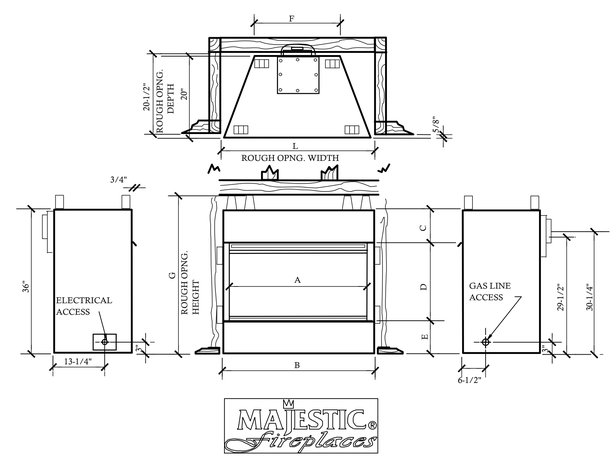

MAJESTIC Fireplaces
HISTYLE REAR VENT
DVBR36

11 DIRECT VENT FIREPLACE NTS
PROPERTY OF DESIGN TECH INC.

FIREPLACE DIMENSIONS

	A	B	C	D	E	F	G	H	J	K	L	M
DVBR36	36"	40"	6-3/8"	23-1/4"	6-3/8"	22"	40-1/2"	45-3/4"	45-3/4"	64-3/4"	41"	32-3/8"
DVBR42	42"	46"	6-3/8"	23-1/4"	5-3/8"	28"	40-1/2"	49"	49"	69-1/2"	47"	35-1/4"

NOTE - VERIFY W/ MANUF. UNIT MODEL NO. & DIMENSIONS REQUIRED FOR FRAMING AROUND FIREPLACE UNIT PRIOR TO CONSTRUCTION

CONTRACTOR SHALL VERIFY ALL CONDITIONS AND DIMENSIONS PRIOR TO CONSTRUCTION. ANY ERROR OR OMISSIONS SHALL BE REPORTED TO DESIGNTECH INC. IMMEDIATELY FOR JUSTIFICATION. CONTRACTOR MUST COMPLY WITH ALL LOCAL, STATE AND FEDERAL CODES. HOME IS TO BE BUILT IF NO ENGINEERING DRAWINGS ARE PROVIDED. CONTRACTOR MUST SUBMIT ENGINEERING DRAWINGS FOR STRUCTURAL DESIGN. ONCE CONSTRUCTION HAS STARTED THE CONTRACTOR WILL ASSUME ALL RESPONSIBILITY.
PLAN HAS BEEN DESIGNED TO COMPLY WITH 2018 IRC.

REVISIONS:

DATE:	NAME:

DRAWN BY: RKR
CHECKED BY: RKR
DATE: 3-25-25
PLAN NO. 15-3544-DT

DESIGNTECH INC.
130 WIND CHIME CT.
UNIT A
RALEIGH, NC 27615
919-239-4972
WWW.DESIGNTECH.COM

JEFFRIES RESIDENCE
15-3544-DT

SHEET NO. 7 OF 8

COPYRIGHT 2025 © BY DESIGN TECH, INC. ALL RIGHTS RESERVED. NO PART OF THESE PLANS MAY BE USED, REPRODUCED, STORED IN A RETRIEVAL SYSTEM, OR TRANSMITTED IN ANY FORM BY ANY MEANS, ELECTRONIC, MECHANICAL PHOTOCOPYING, RECORDING, OR OTHERWISE WITHOUT THE PERMISSION OF DESIGNTECH INC.

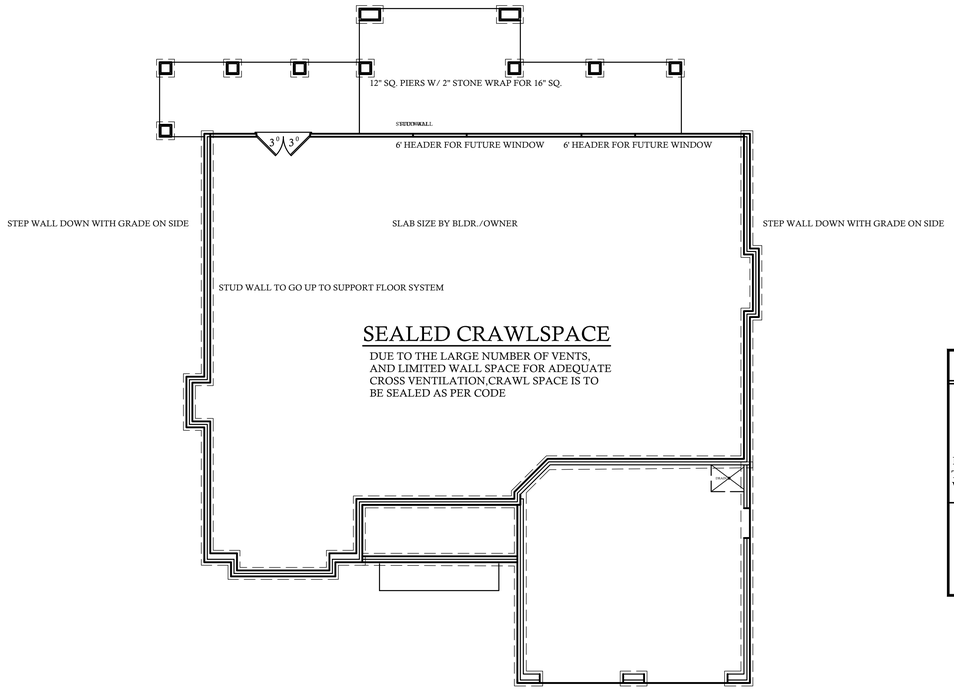

FOUNDATION VENT PLAN

SCALE: 1/8"=1'-0"

-VENT LOCATIONS ARE TO BE VERIFIED PRIOR TO CONSTRUCTION W/ BUILDER BASED ON SECTION R-408 IN THE 2018 NCRC.

-CRAWL SPACE TO HAVE A MIN. OF 24" OF CLEAR SPACE ABOVE GRADE.

-A MIN. OF 36" OF CLEAR SPACE ABOVE GRADE IS NEEDED WHEN HVAC UNIT IS LOCATED IN CRAWL, PROVIDE A CLEAR PATH FROM ACCESS TO THE HVAC UNIT.

ROOF VENTILATING REQUIREMENTS

SQ.FT. OF AREA VENTILATED $\frac{2547}{150}$ (144) = $\frac{2455}{10}$ TOTAL SQ. IN. OF ATTIC VENTILATION REQ'D

NOTE: FIGURE BASED ON SECTION R-806.2 OF THE 2018 NCRC .

MINIMUM NET FREE VENTILATING AREA IS PERMITTED TO BE REDUCED TO 1 TO 300 WHEN CONDITIONS ARE MET AS PER SECTION R806.2 OF THE 2018 NCRC

INLET:

2455 (.5) = 1227.5 SQ. IN. OF INLET VENTING REQ'D

OUTLET:

2455 (.5) = 1227.5 SQ. IN. OF OUTLET VENTING REQ'D

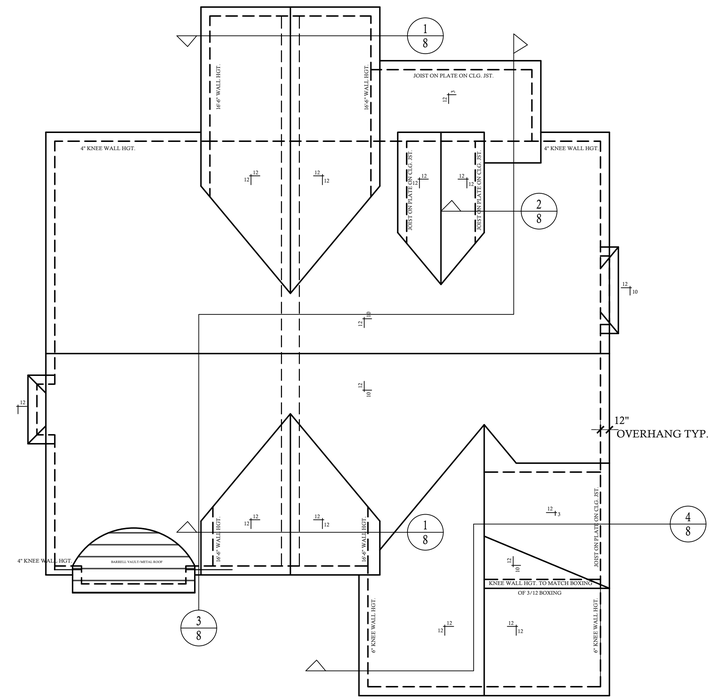

ROOF FRAMING PLAN

SCALE : 1/8"=1'-0"

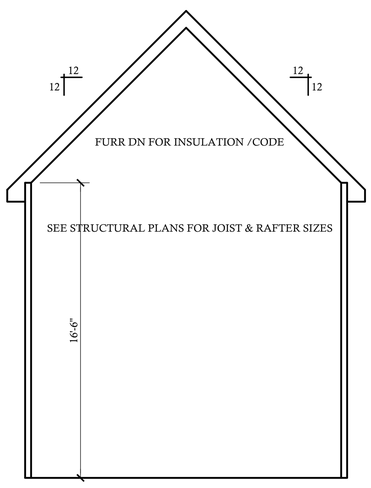

1 BUILDING SECTION SCALE : 1/4"=1'-0"

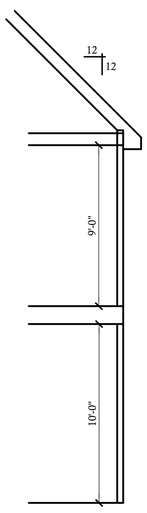

2 BUILDING SECTION SCALE : 1/4"=1'-0"

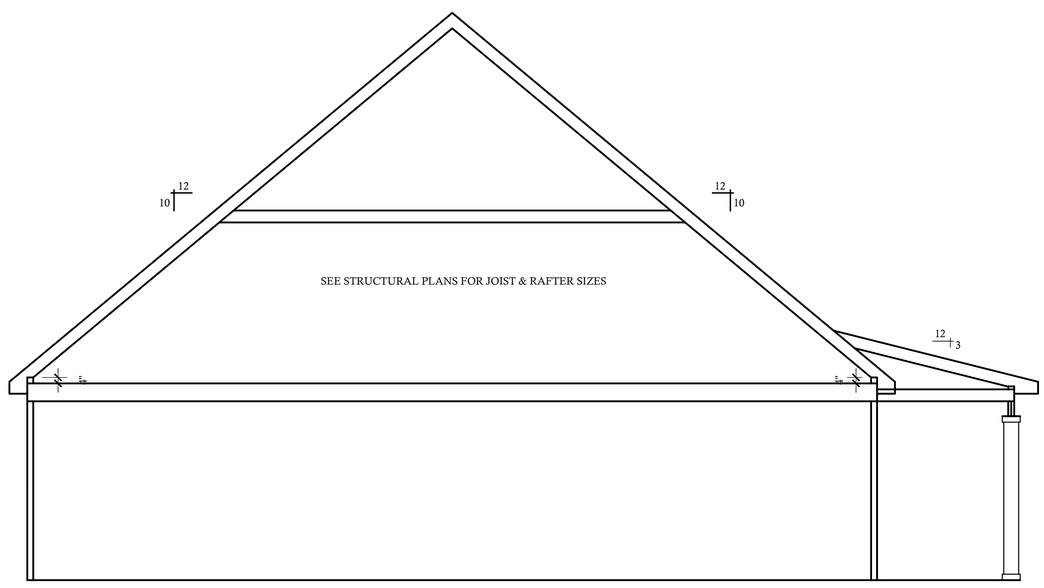

3 BUILDING SECTION SCALE : 1/4"=1'-0"

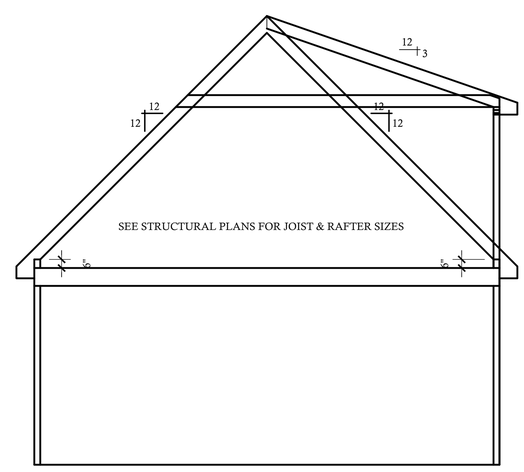

4 BUILDING SECTION SCALE : 1/4"=1'-0"

CONTRACTOR SHALL VERIFY ALL CONDITIONS AND DIMENSIONS PRIOR TO CONSTRUCTION. ANY ERROR OR OMISSIONS SHALL BE REPORTED TO DESIGNTECH INC. PRIOR TO CONSTRUCTION JUSTIFICATION: CONTRACTOR MUST COMPLY WITH ALL LOCAL JURISDICTIONAL CODES THE HOME IS TO BE BUILT IF NO ENGINEERING DRAWINGS ARE PROVIDED, CONTRACTOR MUST SUPPLY ALL DETAILS TO CODE. ALL STRUCTURAL DESIGN, ONCE CONSTRUCTION HAS STARTED, IS THE CONTRACTOR WILL ASSUME ALL RESPONSIBILITY. PLAN HAS BEEN DESIGNED TO COMPLY WITH 2018 NCRC.

REVISIONS:

DATE:	NAME:

DRAWN BY: RKR

CHECKED BY: RKR

DATE: 3-25-25

PLAN NO. 15-3544-DT

DESIGNTECH INC.
130 WIND CHIME CT.
UNIT A
RALEIGH, NC 27615
919-239-4072
WWW.DESIGNTECH.COM

JEFFRIES RESIDENCE

15-3544-DT

SHEET NO. 8 OF 8

COPYRIGHT 2025 © BY DESIGN TECH, INC. ALL RIGHTS RESERVED. NO PART OF THESE PLANS MAY BE USED, REPRODUCED, STORED IN A RETRIEVAL SYSTEM, OR TRANSMITTED IN ANY FORM BY ANY MEANS, ELECTRONIC, MECHANICAL PHOTOCOPYING, RECORDING, OR OTHERWISE WITHOUT THE PERMISSION OF DESIGNTECH INC.

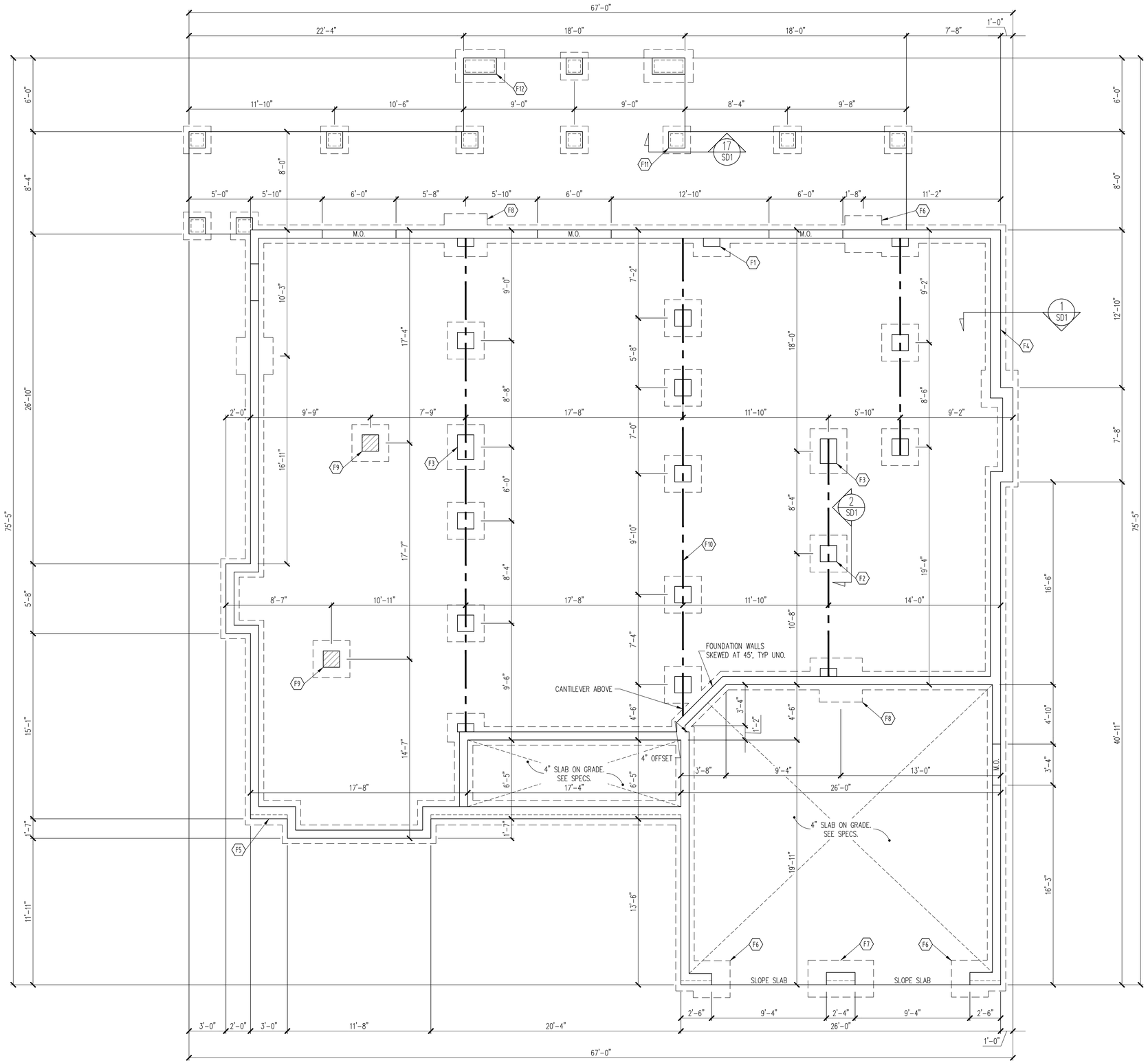

FOUNDATION PLAN

1/4" = 1'-0"

CONSTRUCTION SPECIFICATIONS

INSTANT REFERENCES

REFER TO THE CONSTRUCTION SPECIFICATIONS SECTIONS FOR THE FOLLOWING INFORMATION:

PART 1.01: CURRENT GOVERNING CODE

PART 14: STUD SUPPORT FOR BEAMS

PART 16.02: GENERAL WALL BRACING NOTES

PART 17: KING STUDS FOR EXTERIOR WALLS

SEE DETAIL / CONSTRUCTION SPECIFICATIONS SHEETS FOR I-JOISTS ALLOWABLE SUBSTITUTIONS

FOUNDATION SCHEDULE

F1 8" X 16" CMU PILASTER, PROJECT FOOTING 8" X 8" THICK, TYP UNO.

F2 16" SQ. MASONRY PIER ON A 36" SQ. X 10" THICK CONC FTG TYP UNO.

F3 16" X 24" MASONRY PIER ON A 36" X 44" X 10" THICK CONC FTG.

F4 8" THICK MASONRY FND WALL ON A 18" X 8" THICK CONT POUR CONC FTG TYP UNO

F5 12" THICK MASONRY FND WALL ON A 24" X 8" THICK CONT POUR CONC FTG, TYP @ FOUNDATION WALLS W/ BRICK VENEER ABOVE FLOOR LEVEL.

F6 ENLARGE FOOTING TO 36" SQ. X 12" THICK. SOLID MASONRY ABOVE.

F7 COMMON FOOTING 36" X 64" X 12" THICK. SOLID MASONRY ABOVE

F8 ENLARGE FOOTING TO 42" SQ. X 12" THICK. SOLID MASONRY ABOVE.

F9 FLUSH PIER SET @ FND HGT

F10 DROPPED GIRDER: (3) 1.75" X 9.25" LVL, TYP UNO.

F11 12" SQ MASONRY PIER W/ 2" STONE WRAP ON A 30" SQ. X 10" THK CONC FTG @ DECK, TYP UNO.

F12 24" X 12" MASONRY PIER 2" STONE WRAP ON 46" X 30" X 12" THICK CONC FTG, TYP @ REAR PORCH.

NOTES:
- HEIGHT AND BACKFILL LIMITATIONS FOR FOUNDATION WALLS ARE TO BE GOVERNED BY THE NCSBC, LATEST EDITION.
- BUILDER TO FIELD LOCATE CRAWLSPACE ACCESS OPENING WITH MINIMUM DIMENSIONS OF 18X24. DO NOT LOCATE ACCESS OPENING BELOW POINT LOADS FROM ABOVE WITHOUT ENGINEER APPROVAL.

The structural design of this plan is the property of Engineering Tech Associates, P.A. These plans are for the one time use at the location and for the client listed. Engineering Tech Associates, P.A. assumes no liability for these plans if they are reproduced, in whole or in part, for construction at any other location without written permission from Engineering Tech Associates, P.A.

NORTH CAROLINA PROFESSIONAL SEAL 51637 ENGINEER JAMES NORWOOD CHANG

Engineering Tech ASSOCIATES, P.A.
STRUCTURAL ENGINEERS
License No. C-3870
318 W Millbrook Rd. Unit 201
Raleigh, North Carolina 27609
Phone (919) 844-1661

REV #	REF PROJ #	DATE

DESIGN TECH, INC.
STRUCTURAL ADDENDUM

SCOPE:
LOC: 838 KEITH HILLS RD.
BUIES CREEK, NC
JEFFERIES RESIDENCE

ENG: JNC
DATE: 3/25/2025

PROJECT NO.
25-15-002

SHEET NO.
S1

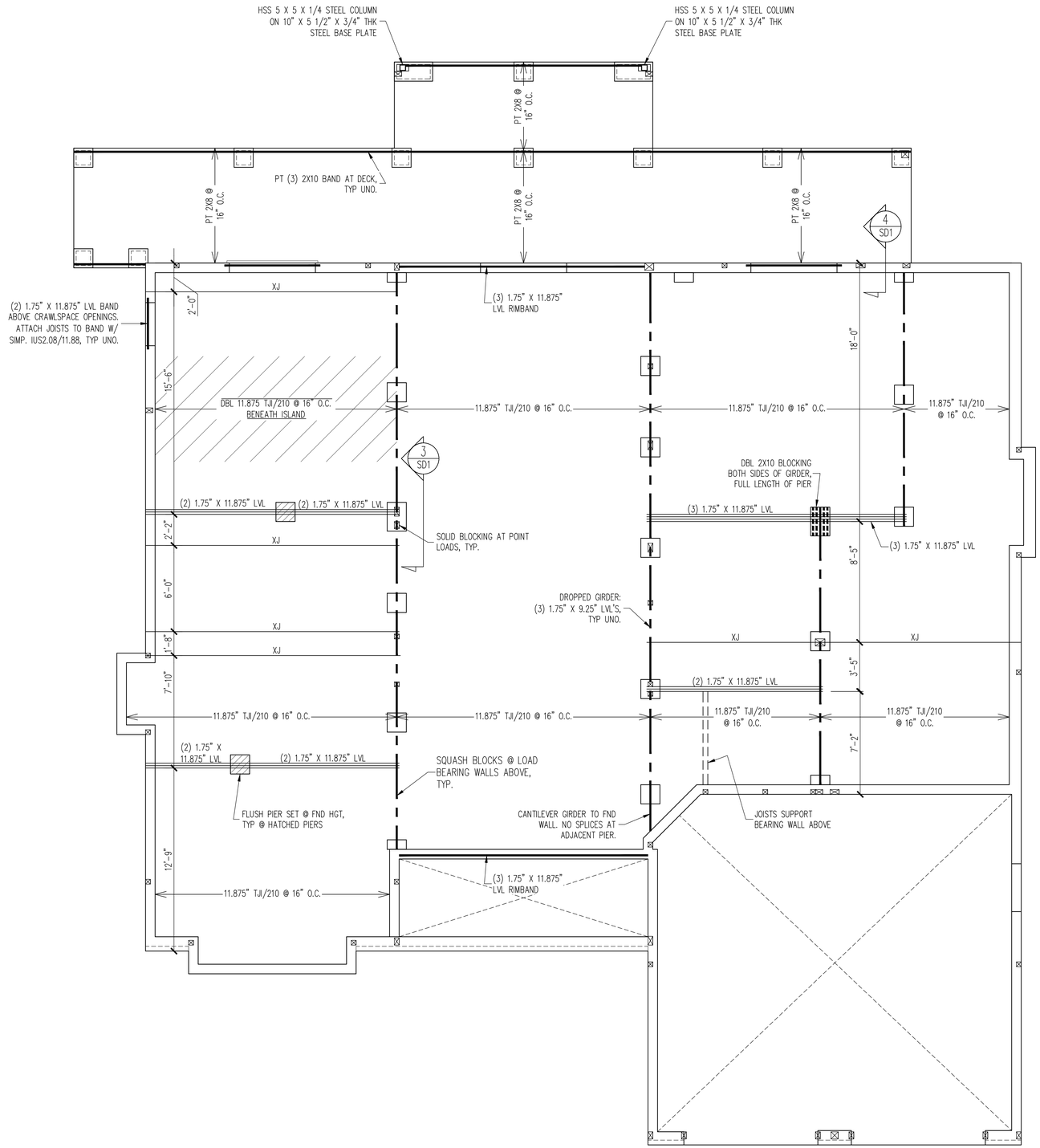

CRAWLSPACE FRAMING PLAN

1/4" = 1'-0"

The structural design of this plan is the property of Engineering Tech Associates, P.A. These plans are for the one time use at the location and for the client listed. Engineering Tech Associates, P.A. assumes no liability for these plans if they are reproduced, in whole or in part, for construction at any other location without written permission from Engineering Tech Associates, P.A.

NORTH CAROLINA PROFESSIONAL SEAL 51637 ENGINEER JAMES NORWOOD CHANG

Engineering Tech ASSOCIATES, P.A.
STRUCTURAL ENGINEERS
License No. C-3870
318 W Millbrook Rd. Unit 201
Raleigh, North Carolina 27609
Phone (919) 844-1661

DESIGN TECH, INC.
STRUCTURAL ADDENDUM

REV #	REF PROJ #	DATE

SCOPE:
LOC: 838 KEITH HILLS RD.
BUIES CREEK, NC
JEFFERIES RESIDENCE

ENG: JNC
DATE: 3/25/2025

PROJECT NO.
25-15-002

SHEET NO.
S2

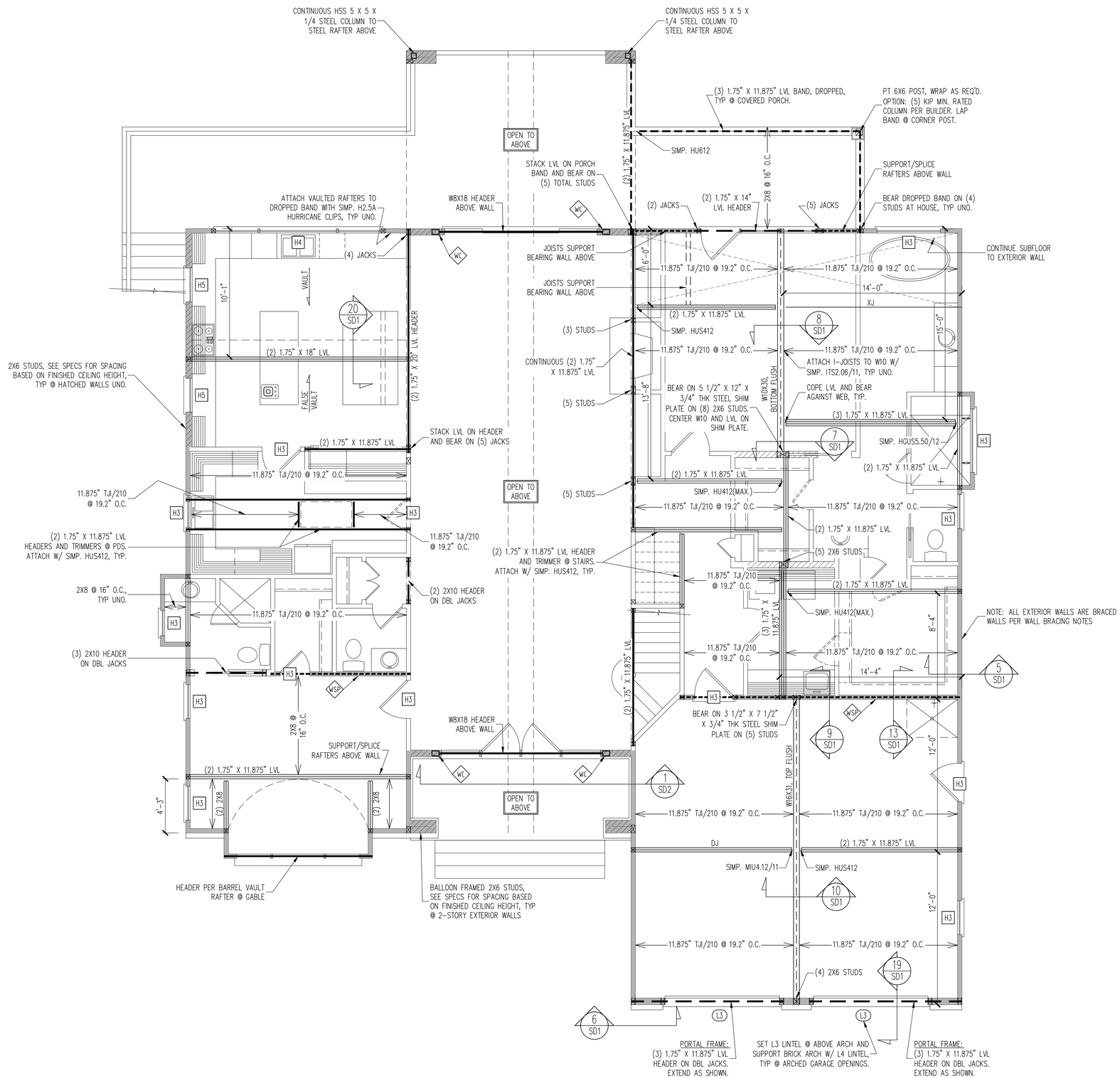

WALL BRACING

CS – ALL EXTERIOR STUD WALLS, EXTERIOR SIDE, ARE TO BE CONTINUOUSLY SHEATHED WITH 7/16 APA RATED OSB NAILED TO STUDS WITH 8d NAILS @ 6" O.C. AT PANEL EDGES, 12" O.C. IN PANEL FIELD.

SHADED WALLS:

WSP ONE SIDE OF INTERIOR WALL OR INSIDE OF EXTERIOR WALL WITH 3/8" MIN. THICKNESS WOOD STRUCTURAL PANELING. ATTACH WSP TO STUD WALL WITH 8d NAILS @ 6" O.C. AT PANEL EDGES, 12" O.C. IN PANEL FIELD.

GB INTERIOR BRACED WALL. 1/2" GB SECURED PER TABLE R602.10.1 OF THE 2018 NCRBC. (FASTENERS @ 7" O.C.) BOTH SIDES OF WALL, OR (FASTENERS @ 4" O.C.) ONE SIDE OF WALL AT STAIRS

WC CONTINUOUS HSS 7 X 5 X 1/4 STEEL COLUMN

NOTES:
–PROVIDED CONTINUOUS SHEATHING = 266' MIN.

LINTEL SCHEDULE

L1 L 3 1/2 X 3 1/2 X 1/4 TYP UNO

L2 L 5 X 3 1/2 X 5/16

L3 L 6 X 4 X 5/16 ATTACHED TO HEADER WITH (2) 1/2" X 3" LAG SCREWS @ 16" O.C.

L4 16 GAGE STEEL FLEX LINTEL AT ARCH

HEADER SCHEDULE

H1 SINGLE 2X4 TURNED FLAT (A)

H2 (2) 2X4'S ON SINGLE JACKS (B)

H3 (2) 2X10'S ON SINGLE JACKS (C)

H4 (2) 1.75" X 9.25" LVL'S ON DBL JACKS

H5 (3) 2X10'S ON SINGLE JACKS

(A) TYPICAL FOR INTERIOR NON LOAD BEARING WALLS ONLY, ROUGH OPENING 38" MAX.

(B) TYPICAL FOR INTERIOR NON LOAD BEARING WALLS ONLY, ROUGH OPNG 38" TO 74" MAX.

(C) TYPICAL FOR ALL CONDITIONS NOT LISTED IN (A) OR (B) UNO.

NOTES:
–HEADERS IN NON LOAD BEARING INTERIOR WALLS ARE NOT LABELED.

1ST FLOOR FRAMING PLAN

WALLS AND CEILING 1/4" = 1'-0"

The structural design of this plan is the property of Engineering Tech Associates, P.A. These plans are for the one time use at the location and for the client listed. Engineering Tech Associates, P.A. assumes no liability for these plans if they are reproduced, in whole or in part, for construction at any other location without written permission from Engineering Tech Associates, P.A.

NORTH CAROLINA PROFESSIONAL SEAL 51637 ENGINEER JAMES A. NORWOOD, JR.

Engineering Tech ASSOCIATES, P.A.
STRUCTURAL ENGINEERS
License No. C-3870
318 W Millbrook Rd. Unit 201
Raleigh, North Carolina 27609
Phone (919) 844-1661

DESIGN TECH, INC.
STRUCTURAL ADDENDUM

REV #	REF PROJ #	DATE

SCOPE:
LOC: 838 KEITH HILLS RD. BUIES CREEK, NC
JEFFERIES RESIDENCE

ENG: JNC
DATE: 3/25/2025

PROJECT NO.
25-15-002

SHEET NO.
S3
3 of 7

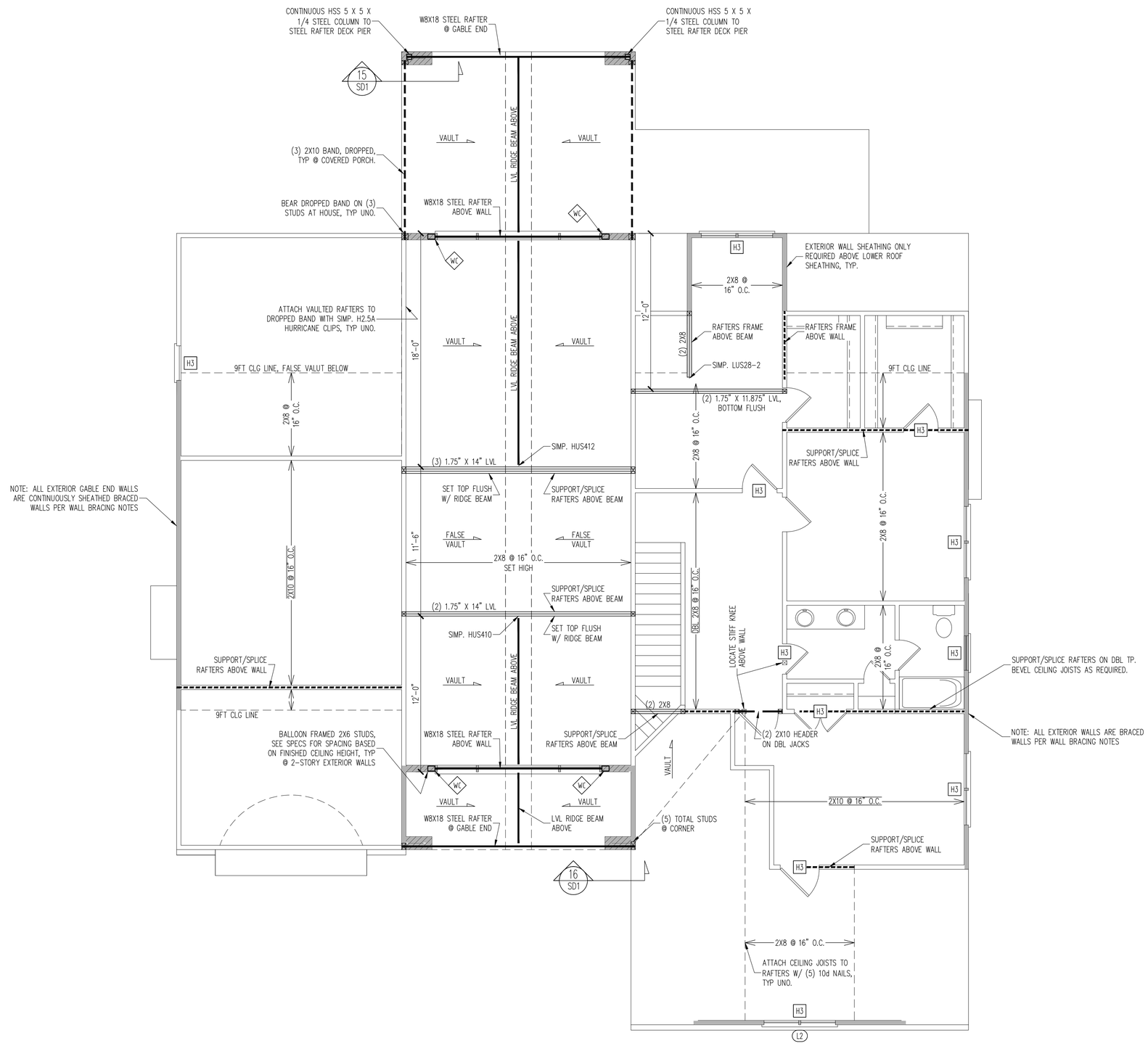

WALL BRACING

CS – ALL EXTERIOR STUD WALLS, EXTERIOR SIDE, ARE TO BE CONTINUOUSLY SHEATHED WITH 7/16 APA RATED OSB NAILED TO STUDS WITH 8d NAILS @ 6" O.C. AT PANEL EDGES, 12" O.C. IN PANEL FIELD.

SHADED WALLS:

WSP ONE SIDE OF INTERIOR WALL OR INSIDE OF EXTERIOR WALL WITH 3/8" MIN. THICKNESS WOOD STRUCTURAL PANELING. ATTACH WSP TO STUD WALL WITH 8d NAILS @ 6" O.C. AT PANEL EDGES, 12" O.C. IN PANEL FIELD.

GB INTERIOR BRACED WALL. 1/2" GB SECURED PER TABLE R602.10.1 OF THE 2018 NCRBC. (FASTENERS @ 7" O.C.) BOTH SIDES OF WALL, OR (FASTENERS @ 4" O.C.) ONE SIDE OF WALL AT STAIRS

WC CONTINUOUS HSS 7 X 5 X 1/4 STEEL COLUMN

NOTES:
–PROVIDED CONTINUOUS SHEATHING = 135' MIN.

LINTEL SCHEDULE

L1 L 3 1/2 X 3 1/2 X 1/4 TYP UNO

L2 L 5 X 3 1/2 X 5/16

L3 L 6 X 4 X 5/16 ATTACHED TO HEADER WITH (2) 1/2" X 3" LAG SCREWS @ 16" O.C.

L4 16 GAGE STEEL FLEX LINTEL AT ARCH

HEADER SCHEDULE

H1 SINGLE 2X4 TURNED FLAT (A)

H2 (2) 2X4'S ON SINGLE JACKS (B)

H3 (2) 2X10'S ON SINGLE JACKS (C)

H4 (2) 1.75" X 9.25" LVL'S ON DBL JACKS

H5 (3) 2X10'S ON SINGLE JACKS

(A) TYPICAL FOR INTERIOR NON LOAD BEARING WALLS ONLY, ROUGH OPENING 38" MAX.

(B) TYPICAL FOR INTERIOR NON LOAD BEARING WALLS ONLY, ROUGH OPNG 38" TO 74" MAX.

(C) TYPICAL FOR ALL CONDITIONS NOT LISTED IN (A) OR (B) UNO.

NOTES:
–HEADERS IN NON LOAD BEARING INTERIOR WALLS ARE NOT LABELED.

2ND FLOOR FRAMING PLAN

WALLS AND CEILING 1/4" = 1'-0"

The structural design of this plan is the property of Engineering Tech Associates, P.A. These plans are for the one time use at the location and for the client listed. Engineering Tech Associates, P.A. assumes no liability for these plans if they are reproduced, in whole or in part, for construction at any other location without written permission from Engineering Tech Associates, P.A.

NORTH CAROLINA PROFESSIONAL SEAL 51637 ENGINEER JAMES NORWOOD CHANG

Engineering Tech ASSOCIATES, P.A.
STRUCTURAL ENGINEERS
License No. C-3870
318 W Millbrook Rd. Unit 201
Raleigh, North Carolina 27609
Phone (919) 844-1661

DESIGN TECH, INC.
STRUCTURAL ADDENDUM

REV #	REF PROJ #	DATE

SCOPE:
LOC: 838 KEITH HILLS RD.
BUIES CREEK, NC
JEFFERIES RESIDENCE

ENG: JNC
DATE: 3/25/2025

PROJECT NO.
25-15-002

SHEET NO.
S4
4 of 7

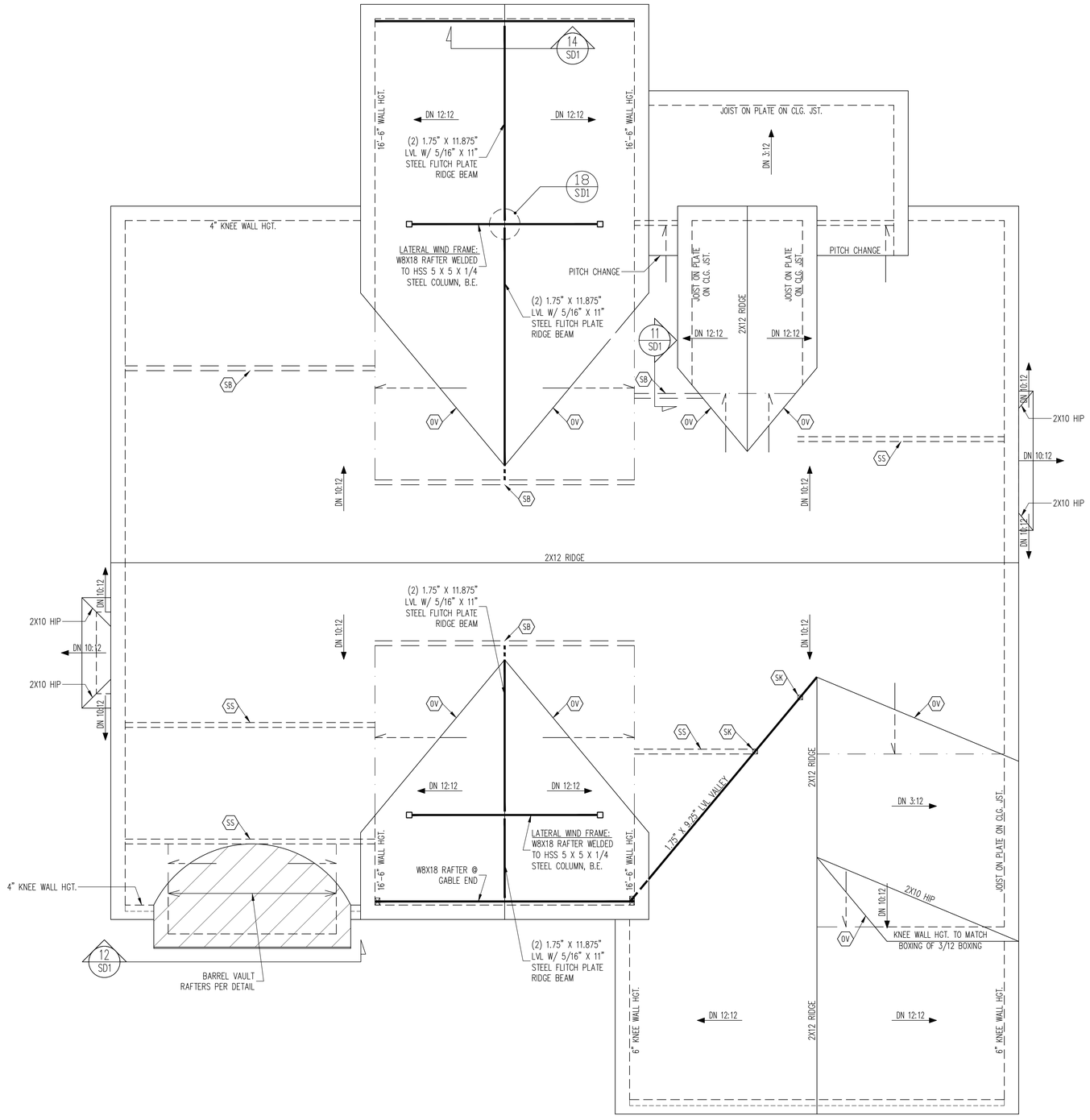

FRAMING NOTES

ROOF ONLY

- COMMON RAFTERS 2X8 @ 16" O.C. TYP U.N.O.
- COLLAR TIES 2X4 EVERY 3RD SET OF RAFTERS TYP U.N.O.
- VERIFY ROOF PITCHES, OVERHANG LENGTHS, AND KNEEWALL FRAMING HGTS WITH ARCHITECTURAL DRAWINGS, TYPICAL.

FRAMING SCHEDULE

ROOF ONLY

OV	OVERFRAME VALLEY (2X10 SLEEPER)
SK	STIFF KNEE (DBL 2X4)
SS	SUPPORT/SPLICE RAFTERS ON KNEEWALL BELOW
SB	SUPPORT/SPLICE RAFTERS ON BEAM BELOW
BR	SUPPORT BRICK VENEER PER SECT 703.8.2 OF THE NCRC, LATEST EDITION
AN	SUPPORT BRICK VENEER WITH ANGLE ATTACHED TO MODIFIED STUD WALL
DR	DOUBLE RAFTER

ROOF FRAMING PLAN

1/4" = 1'-0"

The structural design of this plan is the property of Engineering Tech Associates, P.A. These plans are for the one time use at the location and for the client listed. Engineering Tech Associates, P.A. assumes no liability for these plans if they are reproduced, in whole or in part, for construction at any other location without written permission from Engineering Tech Associates, P.A.

NORTH CAROLINA PROFESSIONAL SEAL 51637 ENGINEER JAMES NORWOOD CHANG

Engineering Tech ASSOCIATES, P.A.
STRUCTURAL ENGINEERS
License No. C-3870
318 W Millbrook Rd. Unit 201
Raleigh, North Carolina 27609
Phone (919) 844-1661

DESIGN TECH, INC.
STRUCTURAL ADDENDUM

REV #	REF PROJ #	DATE

SCOPE:
LOC: 838 KEITH HILLS RD.
BUIES CREEK, NC
JEFFERIES RESIDENCE

ENG: JNC
DATE: 3/25/2025

PROJECT NO.
25-15-002

SHEET NO.
S5
5 of 7

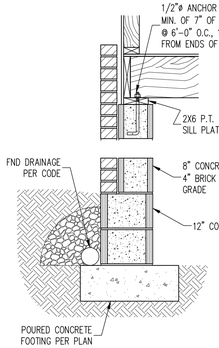

1 / S1 SECTION
TYPICAL FND WALL: CRAWL SPACE WITH BRICK VENEER
3/4" = 1'-0"

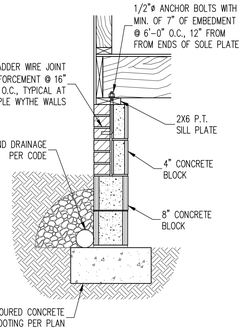

1 / S1 SECTION
TYPICAL FND WALL
3/4" = 1'-0"

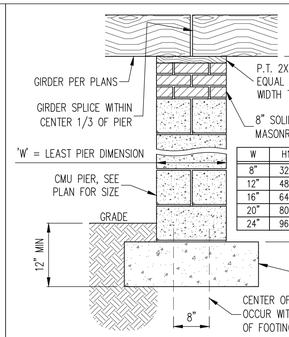

W	H1	H2
8"	32"	80"
12"	48"	120"
16"	64"	160"
20"	80"	---
24"	96"	---

2 / S1 SECTION
TYPICAL MASONRY PIER, GIRDER
3/4" = 1'-0"

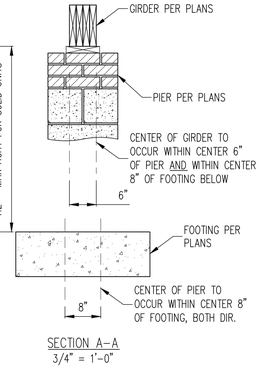

SECTION A-A
3/4" = 1'-0"

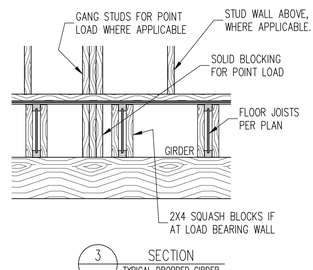

3 SECTION
TYPICAL DROPPED GIRDER
3/4" = 1'-0"

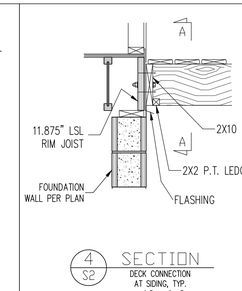

4 / S2 SECTION
DECK CONNECTION AT SIDING, TYP.
3/4" = 1'-0"

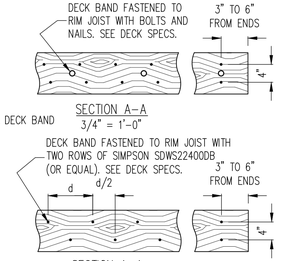

SECTION A-A
3/4" = 1'-0"

SECTION A-A
OPTIONAL
3/4" = 1'-0"

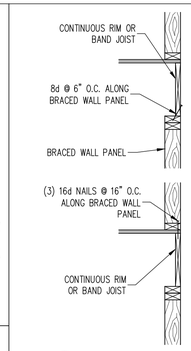

5 / S3 SECTION
TYPICAL BRACED WALL PANEL CONNECTION AT EXTERIOR WALL, JOISTS PERPENDICULAR OR PARALLEL
3/4" = 1'-0"

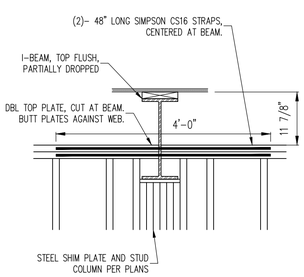

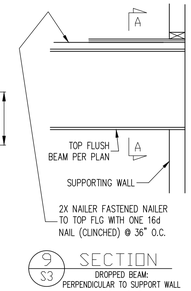

9 / S3 SECTION
DROPPED BEAM: PERPENDICULAR TO SUPPORT WALL
3/4" = 1'-0"

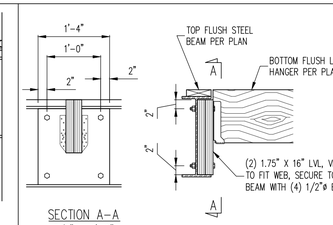

SECTION A-A
3/4" = 1'-0"

10 / S3 SECTION
FLUSH LVL BEAM AT WT8
3/4" = 1'-0"

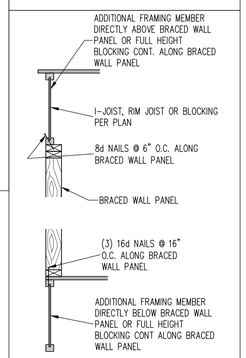

13 / S3 SECTION
TYPICAL BRACED WALL PANEL CONNECTION AT INTERIOR WALL, JOISTS PERPENDICULAR OR PARALLEL
3/4" = 1'-0"

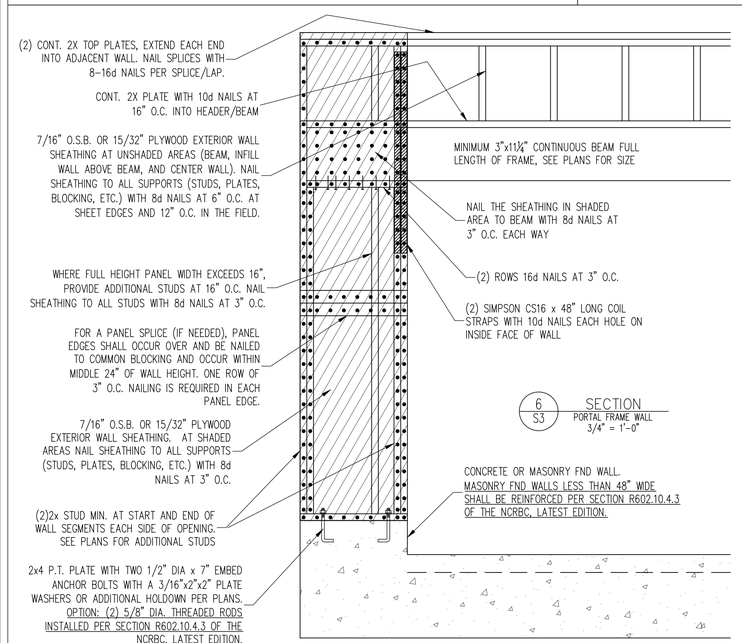

6 / S3 SECTION
PORTAL FRAME WALL
3/4" = 1'-0"

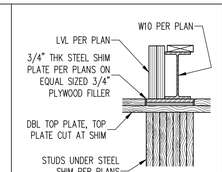

7 / S3 SECTION
FLUSH BEAM ON STEEL SHIM PLATE OVER STUDS
3/4" = 1'-0"

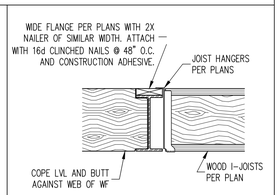

8 / S3 SECTION
WOOD I-JOIST AT WIDE FLANGE
3/4" = 1'-0"

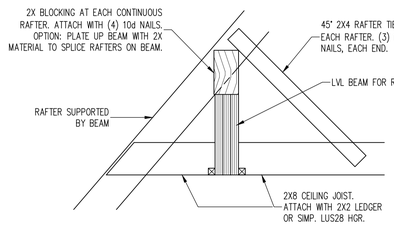

11 / S5 SECTION
ROOF SUPPORT BEAM, TYPICAL.
3/4" = 1'-0"

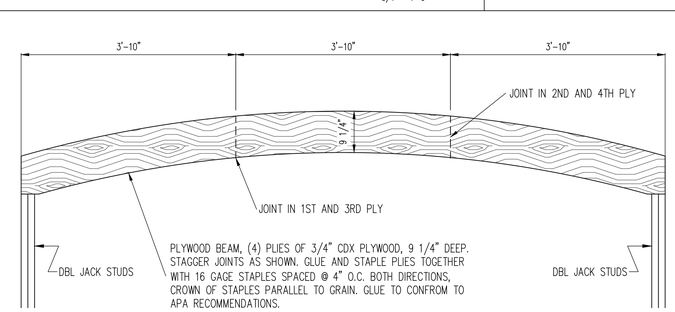

12 / S5 SECTION
PLYWOOD BEAM AT BARRELL VAULT
3/4" = 1'-0"

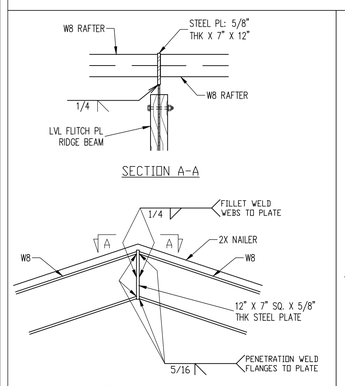

14 / S5 DETAIL
W10 RAFTER CONNECTION WITH RIDGE BEAM
3/4" = 1'-0"

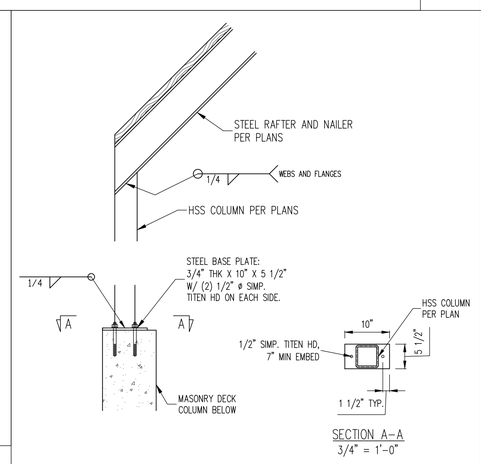

SECTION A-A
3/4" = 1'-0"

15 / S4 SECTION
STEEL BAND ATTACHMENT AT REAR DECK, TYP.
3/4" = 1'-0"

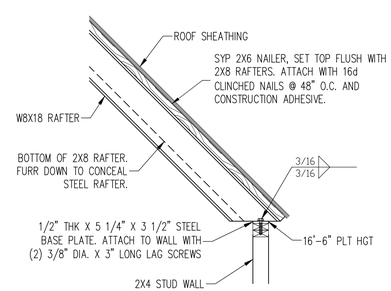

16 / S4 SECTION
STEEL RAFTER
3/4" = 1'-0"

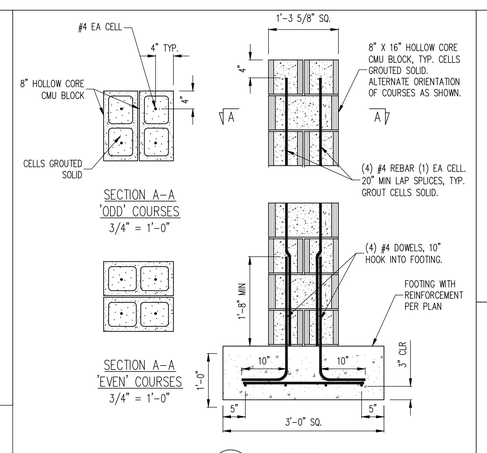

17 / S1 SECTION
TYPICAL 16" SQ. MASONRY COLUMN AT PORCH
3/4" = 1'-0"

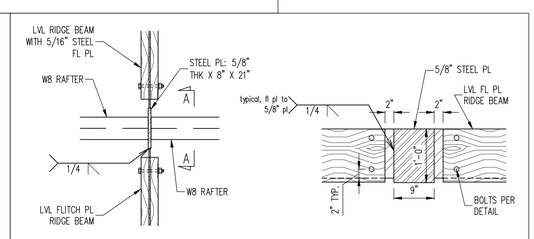

18 / S5 DETAIL
FL PL RIDGE / STEEL RAFTER INTERSECTION
3/4" = 1'-0"

SECTION A-A
3/4" = 1'-0"

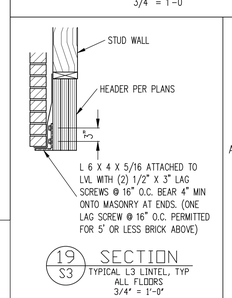

19 / S3 SECTION
TYPICAL L3 LINTEL, TYP ALL FLOORS
3/4" = 1'-0"

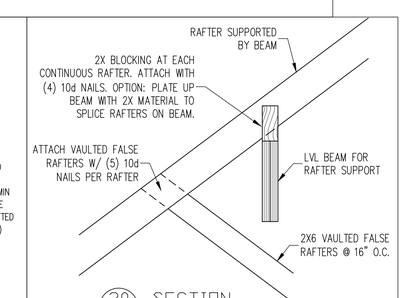

20 / S3 SECTION
TYPICAL VAULTED CEILING
3/4" = 1'-0"

The structural design of this plan is the property of Engineering Tech Associates, P.A. These plans are for the one time use at the location and for the client listed. Engineering Tech Associates, P.A. assumes no liability for these plans if they are reproduced, in whole or in part, for construction at any other location without written permission from Engineering Tech Associates, P.A.

Engineering Tech ASSOCIATES, P.A.
STRUCTURAL ENGINEERS
License No. C-3870
318 W Millbrook Rd. Unit 201
Raleigh, North Carolina 27609
Phone (919) 844-1661

REV #	REF PROJ #	DATE

DESIGN TECH, INC.
SCOPE: STRUCTURAL ADDENDUM
LOC: 838 KEITH HILLS RD. BUIES CREEK, NC
JEFFERIES RESIDENCE

ENG: JNC
DATE: 3/25/2025

PROJECT NO.
25-15-002

SHEET NO.
SD1
6 of 7

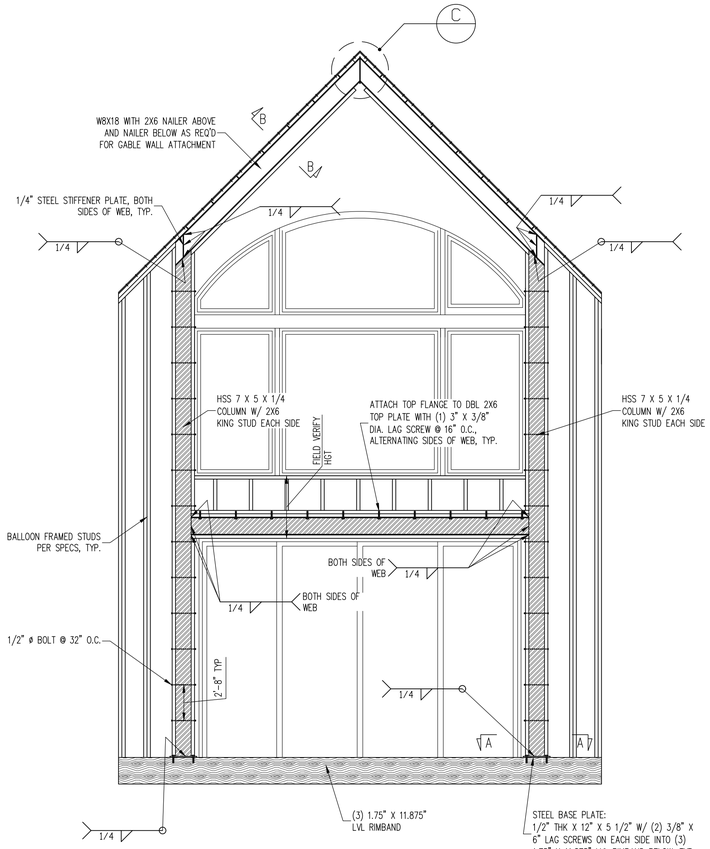

1 / S3 SECTION
TYP. STEEL FRAME @ EXTERIOR WALLS
3/8" = 1'-0"

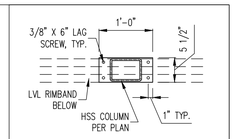

SECTION A-A
3/4" = 1'-0"

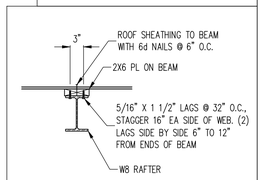

SECTION B-B
3/4" = 1'-0"

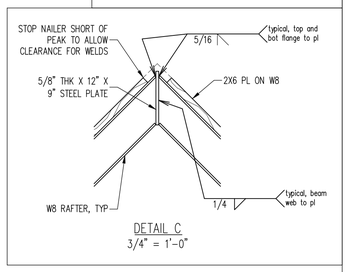

DETAIL C
3/4" = 1'-0"

CONSTRUCTION SPECIFICATIONS

PART 1: GENERAL

1.01 CONSTRUCTION SHALL MEET THE REQUIREMENTS OF THE NORTH CAROLINA RESIDENTIAL CODE, 2018 EDITION.

1.02 DIMENSIONS SHOWN SHALL GOVERN OVER SCALE ON THESE DRAWINGS.

1.05 METHODS, PROCEDURES AND SEQUENCES OF CONSTRUCTION ARE THE RESPONSIBILITY OF THE CONTRACTOR, WHO SHALL TAKE ALL NECESSARY PRECAUTIONS TO MAINTAIN AND INSURE THE INTEGRITY OF THE STRUCTURE AT ALL STAGES OF CONSTRUCTION.

PART 2: DESIGN LOADS

2.01 DESIGN LOADS SHALL CONFORM WITH THE TABLE BELOW:

USE	LIVE LOAD (PSF)	DEAD LOAD (PSF)
BALCONIES, DECKS, ATTICS WITH FIXED STAIR ACCESS, DWELLING UNITS INCLUDING ATTICS WITH FIXED STAIR ACCESS, STAIRS, FIRE ESCAPES	40	10
GARAGES (PASSENGER CARS ONLY)	50	--
ATTICS (NO STORAGE, LESS THAN 5' HEADROOM)	10	10
ATTICS (WITH STORAGE)	20	10
ROOF	20	10 (15 FOR VAULTS)

NOTES: – INDIVIDUAL STAIR TREADS ARE TO BE DESIGNED FOR THE UNIFORMLY DISTRIBUTED LIVE LOAD OF 40 PSF OR A 300 LB. CONCENTRATED LOAD ACTING OVER AN AREA OF 4 SQ. WHICHEVER PRODUCES THE GREATER STRESS.
– BUILDER TO VERIFY DEAD LOAD DOES NOT EXCEED 10 PSF WHEN HEAVY FLOOR OR ROOF FINISHES SUCH AS TILE OR SLATE ARE UTILIZED. NOTIFY ENGINEERING UNDER THESE CONDITIONS

2.02 INTERIOR WALLS: 5 PSF LATERAL.

2.03 BASIC WIND DESIGN VELOCITY OF 120 MPH.

2.04 SOIL BEARING CAPACITY 2000 PSF (PRESUMPTIVE).

PART 3: STRUCTURAL STEEL

3.01 WIDE FLANGE BEAMS AND TEE SECTIONS SHALL CONFORM TO ASTM A992 MINIMUM GRADE

3.02 SQUARE AND RECTANGULAR TUBING SHALL CONFORM TO ASTM A500 GRADE B MINIMUM GRADE.

3.03 STEEL PIPE SHALL CONFORM TO ASTM A53 GRADE B, TYPE S, MINIMUM GRADE

3.04 ALL OTHER STRUCTURAL STEEL SHALL CONFORM TO ASTM A36 MINIMUM GRADE

3.05 STRUCTURAL STEEL CONSTRUCTION SHALL MEET THE REQUIREMENTS OF THE AISC SPECIFICATION FOR THE DESIGN, FABRICATION AND ERECTION OF STRUCTURAL STEEL FOR BUILDINGS.

PART 4: WELDING

4.01 WELDING ELECTRODES SHALL BE E70XX AND ALL WELDING SHALL BE PERFORMED BY AN AWS CERTIFIED WELDER

PART 5: CONCRETE AND SLABS ON GRADE

5.01 CAST IN PLACE CONCRETE SHALL BE OF NORMAL WEIGHT, 4–6% AIR ENTRAINMENT, FOR EXTERIOR CONCRETE AND SHALL HAVE A MINIMUM COMPRESSIVE STRENGTH OF 3000 PSI AT 28 DAYS TYP UNO. ALL ITEMS NOTED AS "CONCRETE" ARE TO BE CAST IN PLACE, TYP UNO.

5.02 REINFORCED CAST IN PLACE CONCRETE SHALL BE PROPORTIONED, MIXED AND PLACED IN ACCORDANCE WITH THE SPECIFICATIONS OF ACI 318, LATEST EDITION.

5.03 SLABS ON GRADE, IF ANY, SHALL BE CAST IN PLACE, CONTAIN SYNTHETIC POLYPROPYLENE FIBRILLATED MICRO FIBERS, FIBER LENGTH 1 1/2", DOSAGE RATE 1 1/2 LBS/CU YD. SLAB TO BE PLACED ON A 6 MIL VAPOR BARRIER ON 4" MIN GRANULAR FILL ON SOIL WITH 90% MIN STANDARD PROCTOR DENSITY. VAPOR BARRIER MAY BE OMITTED FOR SLABS NOT IN ENCLOSED AREAS

PART 6: REBAR AND WIRE REINFORCEMENT

6.01 REBAR SHALL BE DEFORMED STEEL CONFORMING TO ASTM A615 GRADE 60 TYP UNO

6.02 LAP SPLICES SHALL BE CLASS B AS DEFINED BY ACI 318, TYP UNO

6.03 WIRE REINFORCEMENT SHALL BE 9 GA AND SHALL CONFORM TO ASTM A1064.

PART 7: MASONRY

7.01 CONCRETE MASONRY UNITS SHALL CONFORM TO ASTM C90 AND C55, NORMAL WEIGHT, fM = 1,500 PSI MIN

7.02 CLAY MASONRY UNITS SHALL CONFORM TO ASTM C62–17 GRADE SW

7.03 MORTAR SHALL BE TYPE S. MORTAR AND GROUT SHALL CONFORM TO ASTM C476, MIN COMPRESSIVE STRENGTH OF 2000 PSI.

7.04 MASONRY CONSTRUCTION SHALL CONFORM TO THE SPECIFICATIONS OF ACI 530

7.05 LADDER WIRE REINFORCEMENT SHALL CONFORM TO ASTM A951. 6" MIN LAPS FOR CONTINUOUS WALL APPLICATIONS

PART 8: BOLTS AND LAG SCREWS

8.01 BOLTS SHALL CONFORM TO ASTM A307 MINIMUM GRADE TYP UNO. INSTALL STANDARD STEEL WASHERS (ASTM F844–07a) FOR THE NUT / BOLT HEAD WHEN BOLTING WOOD MEMBERS. HOLES FOR BOLTS SHALL BE AISC STANDARD HOLES UNO

8.02 LAG SCREWS SHALL CONFORM TO ANSI/ASME STANDARD B18.2.1–1981. PILOT HOLES SHALL BE USED FOR LAG SCREW INSTALLATION AND SHALL BE BORED ACCORDING TO NDS SPECIFICATIONS. INSTALL STANDARD STEEL WASHERS (ASTM F844–07a) FOR SCREW HEAD

8.03 ANCHOR RODS AND BOLTS SHALL CONFORM TO ASTM F1554–15 GRADE 36 UNO. BENT ANCHOR BOLTS SHALL HAVE A 2" MIN HOOK UNO

PART 9: DRIVEN FASTENERS

9.01 NAILS, SPIKES AND STAPLES SHALL CONFORM TO ASTM F 1667– 05. NAILS ARE TO BE COMMON WIRE OR BOX

PART 10: DIMENSIONAL LUMBER

10.01 SOLID SAWN WOOD FRAMING DESIGN IS BASED ON NO. 2 SPRUCE PINE FIR OR SYP #2 FOR JOISTS, RAFTERS, GIRDERS, BEAMS, STUDS, ETC. MINIMUM ALLOWABLE DESIGN PROPERTIES ARE AS FOLLOWS:
E= 1,400,000 PSI, F_c perp = 425 PSI, F_v = 135 PSI, SPECIFIC GRAVITY = 0.42 MIN
F_b = 875 PSI FOR 2X4, 2X6, 2X8. F_b = 800 PSI FOR 2X10'S, 750 PSI FOR 2X12'S

PART 11: ENGINEERED LUMBER

11.01 LVL OR PSL MINIMUM ALLOWABLE DESIGN PROPERTIES ARE AS FOLLOWS:
E= 1,900,000 PSI, F_b = 2600 PSI, F_v = 285 PSI, F_c perp = 750 PSI
LSL MINIMUM ALLOWABLE DESIGN STRESSES ARE AS FOLLOWS:
E= 1.3 X 10E6 PSI, F_b = 1700 PSI, F_v = 400 PSI, F_c perp = 680 PSI

11.02 LVL OR PSL MEMBERS MAY BE RIPPED FROM DEEPER MEMBERS TO MATCH THE MEMBER DEPTH SPECIFIED IN THE PLANS

PART 12: PRESSURE TREATED LUMBER

12.01 LUMBER IN CONTACT WITH THE GROUND, CONCRETE OR MASONRY SHALL BE PRESSURE TREATED IN ACCORDANCE WITH AWPA STANDARD C–15. ALL OTHER EXPOSED LUMBER SHALL BE TREATED IN ACCORDANCE WITH AWPA STANDARD C–2 OR BY ANY METHOD GIVING EQUAL PROTECTION. THE BUILDING CODE OFFICE MAY ALSO APPROVE A NATURAL DECAY RESISTANT WOOD PER SECTION 19–6(A)

PART 13: STEEL FLITCH PLATE BEAMS

13.01 FLITCH PLATE BEAMS SHALL CONSIST OF A CONTINUOUS STEEL PLATE BOLTED BETWEEN TWO PIECES OF CONTINUOUS LUMBER AS SIZED ON THE PLANS. BOLT PIECES TOGETHER USING 1/2" ø BOLTS SPACED AT 16" O.C. STAGGERED TOP TO BOTTOM OF THE BEAM. MAINTAIN A 2" EDGE DISTANCE. PLACE TWO BOLTS, ONE ABOVE THE OTHER, 16" MAX FROM EACH END OF THE BEAM. TYP UNO

PART 14: STUD SUPPORTS FOR BEAMS

14.01 STEEL ENGINEERED LUMBER, AND FLITCH PLATE BEAMS BEARING ON A STUD WALL SHALL BEAR AS FOLLOWS:

1–WHEN THE BEAM IS PERPENDICULAR TO, OR SKEWED RELATIVE TO THE WALL, THE BEAM SHALL BEAR FULL WIDTH ON THE SUPPORTING WALL INDICATED AND SHALL BE SUPPORTED BY A MINIMUM OF THREE GANGED STUDS, OR A GANGED STUD COLUMN WITH A NUMBER OF STUDS SUCH THAT THE STUD COLUMN IS AT LEAST AS WIDE AS THE TRUE WIDTH OF THE BEAM BEING SUPPORTED, WHICHEVER IS GREATER, TYP UNO. FOR THE SKEWED CONDITION PARTICULAR CARE SHALL BE TAKEN TO ENSURE STUD COLUMN IS CENTERED ON THE BEAM
2–BEAMS BEARING ONTO THE END OF A STUD WALL PARALLEL TO THE BEAM SHALL BEAR A MINIMUM OF 4 1/2" ONTO THE WALL AND BE SUPPORTED BY A TRPL STUD GANGED COLUMN TYP UNO.

14.02 DIMENSIONAL LUMBER BEAMS BEARING ON A STUD WALL SHALL BEAR AS FOLLOWS:

1–WHEN THE BEAM IS PERPENDICULAR TO, OR SKEWED RELATIVE TO THE WALL, THE BEAM SHALL BEAR FULL WIDTH ON THE SUPPORTING WALL INDICATED (LESS 1 1/2" TO ALLOW FOR A CONTINUOUS RIM JOIST WHERE APPLICABLE) AND SHALL BE SUPPORTED BY A GANGED STUD COLUMN THE SAME WIDTH AS THE BEAM TYP UNO. (E.G. A TRIPLE 2X10 IS TO BE SUPPORTED BY (3) STUDS). FOR THE SKEWED CONDITION PARTICULAR CARE SHALL BE TAKEN TO ENSURE STUD COLUMN IS CENTERED ON THE BEAM
2–BEAMS BEARING ONTO THE END OF A STUD WALL PARALLEL TO THE BEAM SHALL BEAR A MINIMUM OF 3" ONTO THE WALL AND BE SUPPORTED BY A DBL STUD GANGED COLUMN TYP UNO.

14.03 EXTRA JOISTS BEARING ON A STUD WALL PERPENDICULAR TO OR SKEWED RELATIVE TO THE BEAM SHALL BE SUPPORTED BY ONE ADDITIONAL STUD.

14.04 STUDS THAT ARE GANGED TO FORM A COLUMN SHALL HAVE ADJACENT STUDS WITHIN THE COLUMN NAILED TOGETHER WITH ONE ROW OF 10d NAILS AT 8" O.C. (TWO ROWS OF 10d NAILS @ 8" O.C., 3" APART, FOR 2X8 OR 2X10 STUDS) ALL COLUMNS SHALL BE CONTINUOUS DOWN TO THE FOUNDATION OR OTHER PROPERLY DESIGNED STRUCTURAL ELEMENT SUCH AS A BEAM. COLUMNS TRANSFERRING LOADS THROUGH FLOOR LEVELS SHALL BE SOLIDLY BLOCKED FOR THE FULL WIDTH OF THE STUD COLUMN WITHIN THE CAVITY FORMED BY THE FLOOR JOISTS.

PART 15: NAILING OF MULTI PLY WOOD BEAMS

15.01 SOLID SAWN LUMBER JOISTS THAT ARE GANGED TO FORM A BEAM SHALL HAVE ADJACENT MEMBERS IN THE BEAM NAILED TOGETHER WITH THREE ROWS OF 10d NAILS @ 16" O.C. FOR 2X10 OR LARGER, TWO ROWS OF 10d NAILS @ 16" O.C. FOR 2X8, ONE ROW OF 10d NAILS @ 16" O.C. FOR 2X6 OR SMALLER. STAGGER ROWS 5" MIN.

15.02 LVL MEMBERS THAT ARE GANGED TO FORM A BEAM SHALL HAVE ADJACENT MEMBERS IN THE BEAM FASTENED TOGETHER PER MANUFACTURERS RECOMMENDATIONS, TYP UNO

PART 16: WALL FRAMING AND BRACING

16.01 STUD WALLS SHALL CONSIST OF 2X4 STUDS SPACED AT 16" O.C. UNO. STUDS SHALL BE CONTINUOUS FROM SOLE PLATE AT FLOOR TO DOUBLE TOP PLATE AT THE CEILING OR ROOF. NO INTERMEDIATE BANDS OR PLATES SHALL CAUSE DISCONTINUITIES IN A STUD WALL EXCEPT AS REQUIRED FOR DOOR OR WINDOW OPENINGS. THE KING STUDS FOR SUCH OPENINGS SHALL BE CONTINUOUS, TYP UNO.
MAX ALLOWABLE WALL HEIGHTS FOR EXTERIOR STUD WALLS, INCLUSIVE OF SOLE PLATE AND DBL TOP PLATE AND 7/16" OSB EXTERIOR BRACING AND ROW OF 2X4 2X6 PURLINS AT 8' HEIGHT (AND AT 16' HEIGHT FOR TALL WALLS), TYP UNO:
2X4 @ 16" O.C.: 11'–1 1/2" 2X6 @ 16" O.C.: 17'–0"
2X4 @ 12" O.C.: 12'–1 1/2" 2X6 @ 12" O.C.: 18'–8"
DBL 2X4 @ 16" O.C.: 13'–4" DBL 2X6 @ 16" O.C.: 21'–0"

16.02 FOR WALL BRACING THE FOLLOWING SHALL APPLY:
–BLOCKING AT UNSUPPORTED PANEL EDGES IS REQUIRED TYP UNO.
–WALL BRACING IS BY ENGINEERED DESIGN AND NOT PRESCRIPTIVE PER SECTION 602.10 OF THE 2018 NCRC. CONTINUOUS SHEATHING HAS BEEN PROVIDED, ALONG WITH ALTERNATIVE METHODS TO INSURE THE MINIMUM INTENT OF SECTION 602.10 OF THE 2018 NCRC HAS BEEN MET AND EXCEEDED.
–BRACED WALL PANELS SHALL BE FASTENED IN ACCORDANCE WITH TABLE 602.3(1) TO PROVIDE CONTINUOUS PANEL UPLIFT RESISTANCE AND COMPLIANCE WITH NCRBC R602.3.5 AND R602.11 UNLESS NOTED OTHERWISE ON STRUCTURAL PLANS.
–MAY SUBSTITUTE WSP FOR GB
–SINGLE JOIST, CONTINUOUS RIM JOIST, OR BLOCKING OF EQUAL DEPTH IS REQUIRED ABOVE AND BELOW ALL BRACED WALLS. NAIL BLOCKING ABOVE WALL TO TOP PLATE WITH 16d TOE NAILS @ 6" O.C. NAIL SOLE PLATE OF BRACED WALL TO BLOCKING BELOW WITH (3) 16d NAILS @ 16" O.C. BLOCKING AT HORIZONTAL JOINTS IN BRACED WALL LINES ONLY REQUIRED AT SHADED WALLS, UNO.

PART 17: KING STUDS

17.01 KING STUDS FOR OPENINGS IN EXTERIOR WALLS SHALL BE AS FOLLOWS:

		NUMBER OF KING STUDS				
MAX OPENING WIDTH		5'–0"	9'–0"	13'–0"	17'–0"	21'–0"
STUD SIZE	2X4	1	2	3	4	5
	2X6	1	1	2	2	2
	2X8	1	1	1	1	2

PART 18: SUBSTITUTIONS

18.01 MATERIAL OR MEMBER SIZE SUBSTITUTIONS OR PLAN DEVIATIONS REQUIRE THE WRITTEN AUTHORIZATION OF THE DESIGNERS. UNAUTHORIZED DEVIATIONS ARE THE SOLE RESPONSIBILITY OF THE CONTRACTOR.

PART 19: OWNERSHIP OF STRUCTURAL DESIGN

19.01 THE STRUCTURAL DESIGN OF THIS PLAN IS THE PROPERTY OF ENGINEERING TECH ASSOCIATES (ETA). THESE PLANS ARE FOR THE ONE TIME USE AT THE LOCATION INDICATED AND FOR THE CLIENT LISTED. ETA ASSUMES NO LIABILITY FOR THESE PLANS IF THEY ARE REPRODUCED, IN WHOLE OR IN PART, FOR CONSTRUCTION AT ANY OTHER LOCATION WITHOUT WRITTEN PERMISSION FROM ETA

NOTES

THE BUILDER IS RESPONSIBLE FOR REVIEWING PLANS PRIOR TO CONSTRUCTION. THE BUILDER SHALL IMMEDIATELY CONTACT THE ENGINEER OF RECORD (EOR) BEFORE PROCEEDING IF THE FOLLOWING CONDITIONS ARE NOTED BEFORE OR DURING CONSTRUCTION:
1) THE WORKING PLANS DO NOT BEAR THE SEAL OF THE EOR
2) THE PLANS CONTAIN DISCREPANT OR INCOMPLETE INFORMATION

ANY ERRORS DUE TO A FAILURE TO FOLLOW THE ABOVE PROCEDURES SHALL NOT BE THE RESPONSIBILITY OF THE EOR. FURTHERMORE, IT IS THE RESPONSIBILITY OF THE BUILDER TO ENSURE THAN ANY REVISIONS ISSUED BY THE EOR ARE PROMPLY DISTRIBUTED TO THE SUBCONTRACTORS

THE EOR DOES NOT PERFORM FENESTRATION OR VENTING CALCULATIONS OR ANY OTHER CALCULATIONS THAT ARE NOT DIRECTLY RELATED TO STRUCTURAL ENGINEERING.

ROOF AND FLOOR TRUSSES TO BE DESIGNED BY AN ENGINEER REGISTERED BY THE STATE. FINAL TRUSS DRAWING SHOULD BE SUBMITTED TO THE EOR FOR REVIEW

ABBREVIATIONS

ABV	ABOVE	FND	FOUNDATION	TJ	TRIPLE JOIST
B.	BOTH	FTG	FOOTING	TYP	TYPICAL
B.E.	BOTH ENDS	HDG	HOT DIPPED GALVANIZED	TRPL	TRIPLE
BTWN	BETWEEN	HGR	HANGER	TSP	TRIPLE STUD POCKET
CIP	CAST IN PLACE	LVL	LAMINATED VENEER LUMBER	UNO	UNLESS NOTED OTHERWISE
CONC	CONCRETE	NTS	NOT TO SCALE	XJ	EXTRA JOIST
CS	CONTINUOUS SHEATHING	O.C.	ON CENTER		
DIA	DIAMETER	PSL	PARALLEL STRAND LUMBER		
DBL	DOUBLE	PT	PRESSURE TREATED		
DJ	DOUBLE JOIST	QJ	QUAD JOIST		
DSP	DBL STUD POCKET	SP	SPACE (OR SPACING)		
EQ	EQUAL	SSP	SINGLE STUD POCKET		
EA	EACH	SQ	SQUARE		
FLG	FLANGE				
FL PL	FLITCH PLATE				
FLR	FLOOR				

ALLOWABLE I-JOIST SUBSTITUTION

NOTE: MAINTAIN JOIST DEPTH, DIRECTION, AND SPACING SPECIFIED ON PLANS.

MANUFACTURER	DEPTH	SERIES	SIMPSON FACE MOUNT HGR	SIMPSON TOP FLANGE HGR
BLUELINX	11.875"	BLI 40	IUS2.56/11.88	ITS2.56/11.88
BOISE CASCADE	11.875"	BCI 5000s	IUS2.06/11.88	ITS2.06/11.88
BOISE CASCADE	11.875"	BCI 6000s	IUS2.37/11.88	ITS2.37/11.88
INTERNATIONAL BEAMS	11.875"	IB 400	IUS2.56/11.88	ITS2.56/11.88
LP CORP	11.875"	LPI 20+	IUS2.56/11.88	ITS2.56/11.88
NORDIC	11.875"	NI 40X	IUS2.56/11.88	ITS2.56/11.88
ROSEBURG	11.875"	RFPI 40s	IUS2.56/11.88	ITS2.56/11.88
WEYERHAEUSER	11.875"	TJI 210	IUS2.06/11.88	ITS2.06/11.88
WEYERHAEUSER	11.875"	EEI–20	IUS2.37/11.88	ITS2.37/11.88

JOISTS NOT LISTED IN THE ABOVE TABLE MAY BE USED PROVIDED THEY MEET OR EXCEED THE PROPERTIES OF THOSE LISTED. SUBSTITUTE USP BRAND HANGERS WITH EQUIVALENT VALUES AS DESIRED.

DECK SPECIFICATIONS

1. A DECK IS AN EXPOSED EXTERIOR WOOD FLOOR STRUCTURE WHICH MAY BE ATTACHED TO A STRUCTURE OR BE FREE STANDING. ROOFED PORCHES, OPEN OR SCREENED IN, MAY BE CONSTRUCTED USING THESE PROVISIONS.

2. SUPPORT POSTS SHALL BE SUPPORTED BY A FOOTING.

3. WHEN ATTACHED TO A STRUCTURE, THE STRUCTURE TO WHICH ATTACHED SHALL HAVE A TREATED WOOD BAND FOR THE LENGTH OF THE DECK, OR CORROSION RESISTANT FLASHING SHALL BE USED TO PREVENT MOISTURE FROM COMING IN CONTACT WITH THE UNTREATED FRAMING OF THE STRUCTURE. THE DECK BAND AND THE STRUCTURE BAND SHALL BE CONSTRUCTED IN CONTACT WITH EACH OTHER EXCEPT AT BRICK VENEER AND WHERE PLYWOOD SHEATHING IS REQUIRED AND PROPERLY FLASHED. SIDING SHALL NOT BE INSTALLED BETWEEN THE STRUCTURE AND THE DECK BAND. IF ATTACHED TO A BRICK STRUCTURE, NEITHER FLASHING NOR A TREATED BAND FOR THE BRICK STRUCTURE IS REQUIRED. IN ADDITION, THE TREATED DECK BAND SHALL BE CONSTRUCTED IN CONTACT WITH THE BRICK

4. WHEN THE DECK IS SUPPORTED AT THE STRUCTURE BY ATTACHING THE DECK TO THE STRUCTURE, THE FOLLOWING ATTACHMENT SCHEDULES SHALL APPLY FOR ATTACHING THE DECK BAND TO THE STRUCTURE:

A. ALL STRUCTURES EXCEPT BRICK STRUCTURES

	JOIST LENGTH	
	UP TO 8' MAX.	UP TO 16' MAX.
REQUIRED FASTENERS	ONE– 5/8" ø BOLT @ 42" O.C. AND (2) ROWS OF 12d NAILS @ 8" O.C. OR TWO ROWS OF SIMPSON SDWS22400DB @ d = 32" O.C. STAGGERED	ONE– 5/8" ø BOLT @ 20" O.C. AND (3) ROWS OF 12d NAILS @ 6" O.C. OR TWO ROWS OF SIMPSON SDWS22400DB @ d = 16" O.C. STAGGERED

A . BRICK VENEER STRUCTURES

	JOIST LENGTH	
	UP TO 8' MAX.	UP TO 16' MAX.
REQUIRED FASTENERS	ONE– 5/8" ø BOLT @ 28" O.C.	ONE– 5/8" ø BOLT @ 16" O.C.

5. IF THE DECK BAND IS SUPPORTED BY A 1/2" MINIMUM MASONRY LEDGE ALONG THE FOUNDATION WALL, 5/8" ø BOLTS SPACED @ 48" O.C. MAY BE USED FOR SUPPORT.

6. OTHER MEANS OF SUPPORT, SUCH AS JOIST HANGERS, MAY BE USED TO CONNECT DECK JOISTS TO A TREATED STRUCTURE BAND

7. GIRDERS SHALL BEAR DIRECTLY ON POSTS OR BE BE CONNECTED TO THE SIDES OF POSTS WITH 2– 5/8" ø BOLTS

8. FLOOR DECKING SHALL BE NO. 2 GRADE TREATED SOUTHERN PINE OR EQUIVALENT. THE MINIMUM FLOOR DECKING THICKNESS SHALL BE AS FOLLOWS:

JOIST SPAN	DECKING
12" O.C.	1" S4S
16" O.C.	1" T&G
24" O.C.	1 1/4" S4S
32" O.C.	2" S4S

9. MAXIMUM HEIGHT OF DECK SUPPORT POSTS IS AS FOLLOWS:

POST SIZE	MAX POST HEIGHT
4X4	8'
6X6	20'
ENGINEERED	20' +

NOTES: 1) THIS TABLE IS BASED ON NO. 2 TREATED SOUTHERN PINE POSTS.
2) THIS TABLE IS BASED ON A MAXIMUM TRIBUTARY AREA OF 128 SQ. FT.
3) POST HEIGHT IS FROM TOP OF FOOTING TO BOTTOM OF GIRDER.

10. DECKS SHALL BE BRACED TO PROVIDE LATERAL STABILITY BY ONE OF THE FOLLOWING METHODS:

A. WHEN THE DECK FLOOR HEIGHT IS LESS THAN 4'–0" AND THE DECK IS ATTACHED TO THE STRUCTURE IN ACCORDANCE WITH SECTION 4, LATERAL BRACING IS NOT REQUIRED.

B. 4X4 WOOD KNEE BRACES MAY BE PROVIDED ON EACH COLUMN IN BOTH DIRECTIONS. THE KNEE BRACES SHALL ATTACH TO EACH POST AT A POINT NOT LESS THAN 1/3 OF THE POST LENGTH FROM THE TOP OF THE POST, AND THE BRACES SHALL BE ANGLED BETWEEN 45° AND 60° FROM THE HORIZONTAL. KNEE BRACES SHALL BE ATTACHED AT THE ENDS TO THE GIRDER AND THE POST WITH ONE – 5/8"ø BOLT

C. FOR FREE STANDING DECKS WITHOUT KNEE BRACES OR DIAGONAL BRACING, LATERAL STABILITY MAY BE PROVIDED BY EMBEDDING THE POSTS IN CONCRETE IN ACCORDANCE WITH THE FOLLOWING:

POST SIZE	TRIBUT. AREA	POST HEIGHT	EMB. DEPTH	CONC. DIAM.
4X4	48 SQ. FT.	4'–0"	2'–6"	1'–0"
6X6	120 SQ. FT.	6'–0"	3'–6"	1'–8"

D. 2X6 DIAGONAL VERTICAL CROSS BRACING SHALL BE PROVIDED IN TWO PERPENDICULAR DIRECTIONS FOR FREE STANDING DECKS OR PARALLEL TO THE STRUCTURE AT THE EXTERIOR COLUMN LINE FOR ATTACHED DECKS. THE BRACES SHALL BE ATTACHED TO THE POSTS WITH ONE – 5/8" ø BOLT AT EACH END OF THE BRACE.

NOTES: 1) ALL NAILS AND BOLTS ARE TO BE HOT DIPPED GALVANIZED.
2) MINIMUM EDGE DISTANCE FOR BOLTS IS 2 1/2".
3) NAILS MUST PENETRATE THE SUPPORTING STRUCTURE BAND A MINIMUM OF 1 1/2".

The structural design of this plan is the property of Engineering Tech Associates, P.A. These plans are for the one time use at the location and for the client listed. Engineering Tech Associates, P.A. assumes no liability for these plans if they are reproduced, in whole or in part, for construction at any other location without written permission from Engineering Tech Associates, P.A.

NORTH CAROLINA PROFESSIONAL ENGINEER SEAL 51637 JAMES NORWOOD CHANG

Engineering Tech ASSOCIATES, P.A.
STRUCTURAL ENGINEERS
License No. C-3870
318 W Millbrook Rd. Unit 201
Raleigh, North Carolina 27609
Phone (919) 844-1661

DESIGN TECH, INC.
STRUCTURAL ADDENDUM
SCOPE:
LOC: 838 KEITH HILLS RD.
BUIES CREEK, NC
JEFFERIES RESIDENCE

REV #	REF PROJ #	DATE

ENG: JNC
DATE: 3/25/2025

PROJECT NO.
25-15-002

SHEET NO.
SD2
7 of 7