Carter Sanford Component Plant
298 Harvey Faulk Rd
Sanford, NC 27332

Phone #:919-775-1450

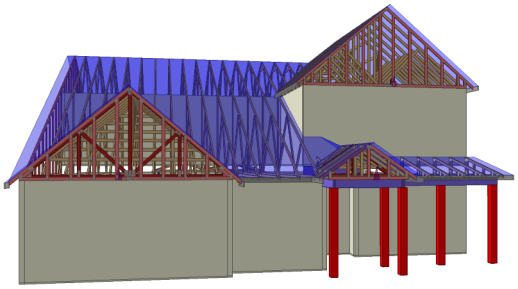

Builder: **David Weekley Homes**

Model: **328 A CP GLH - 1004 Serenity**

THE PLACEMENT PLAN NOTES:

1. The Placement Plan is a diagram for truss installation. It is not an engineered drawing and has not been reviewed by an engineer. The Owner/Building Designer is responsible for obtaining an engineer's review if one is required by the local jurisdiction.
2. The responsibilities of the Owner, Contractor, Building Designer, Component Designer and Component Manufacturer shall be as set forth in ANSI/TPI 1. Capitalized terms shall be as defined in ANSI/TP 1 unless otherwise indicated.
3. Each Component is designed as an individual component utilizing information provided by others. The Owner/Building Designer is responsible for reviewing all Component Submittal Packages and individual Component Design Drawings for compliance with the Construction Documents and compatibility with the overall Building design.
4. Contractor will not proceed with component installation until the Owner/Building Designer has reviewed the Component Submittal Package. Questions on the suitability of any Component will be resolved by the Building Designer.
5. The Building Designer and Contractor are responsible for all temporary and permanent bracing.
6. The Placement Plan assumes the building is dimensionally correct, structurally sound, and in a suitable condition to support each Component during installation and thereafter, including but not limited to installation of all bearing points. Proper design and construction of all structural components, including foundations, headers, beams, walls and columns are the responsibility of the Owner, Building Designer and Contractor.
7. Do not cut, drill, or modify any Component without first consulting the Component Manufacturer or Building Designer. Damaged Components shall not be installed unless directed by the Building Designer or approved by the Component Manufacturer.
8. Components must be handled and installed following all applicable safety standards and best practices, including but not limited to BCSI, OSHA, TPI and local codes. Failure to properly handle, brace or otherwise install Component can result in serious injury or death.
9. All uplift connectors shown within these documents are recommendations only. Per ANSI/TPI 1, all uplift connectors are the responsibility of the building designer and or contractor.

Approved By: _____ **Date:** _____

General Notes: ** CUTTING OR DRILLING OF COMPONENTS SHOULD NOT BE DONE WITHOUT CONTACTING COMPONENT SUPPLIER FIRST. CUSTOMER TAKES FULL RESPONSIBILITY FOR COMPONENTS IF CUT BEFORE AUTHORIZATION. ** ALL BEARING POINTS MUST BE INSTALLED PRIOR TO SETTING ANY COMPONENTS.

** FRAMER MUST REFER TO PLANS WHILE SETTING COMPONENTS. ** DAMAGED COMPONENTS SHOULD NOT BE INSTALLED UNLESS TOLD TO BY THE COMPONENT PLANT. ** TRUSS TO TRUSS CONNECTIONS ARE TOE-NAILED, UNLESS NOTED OTHERWISE.

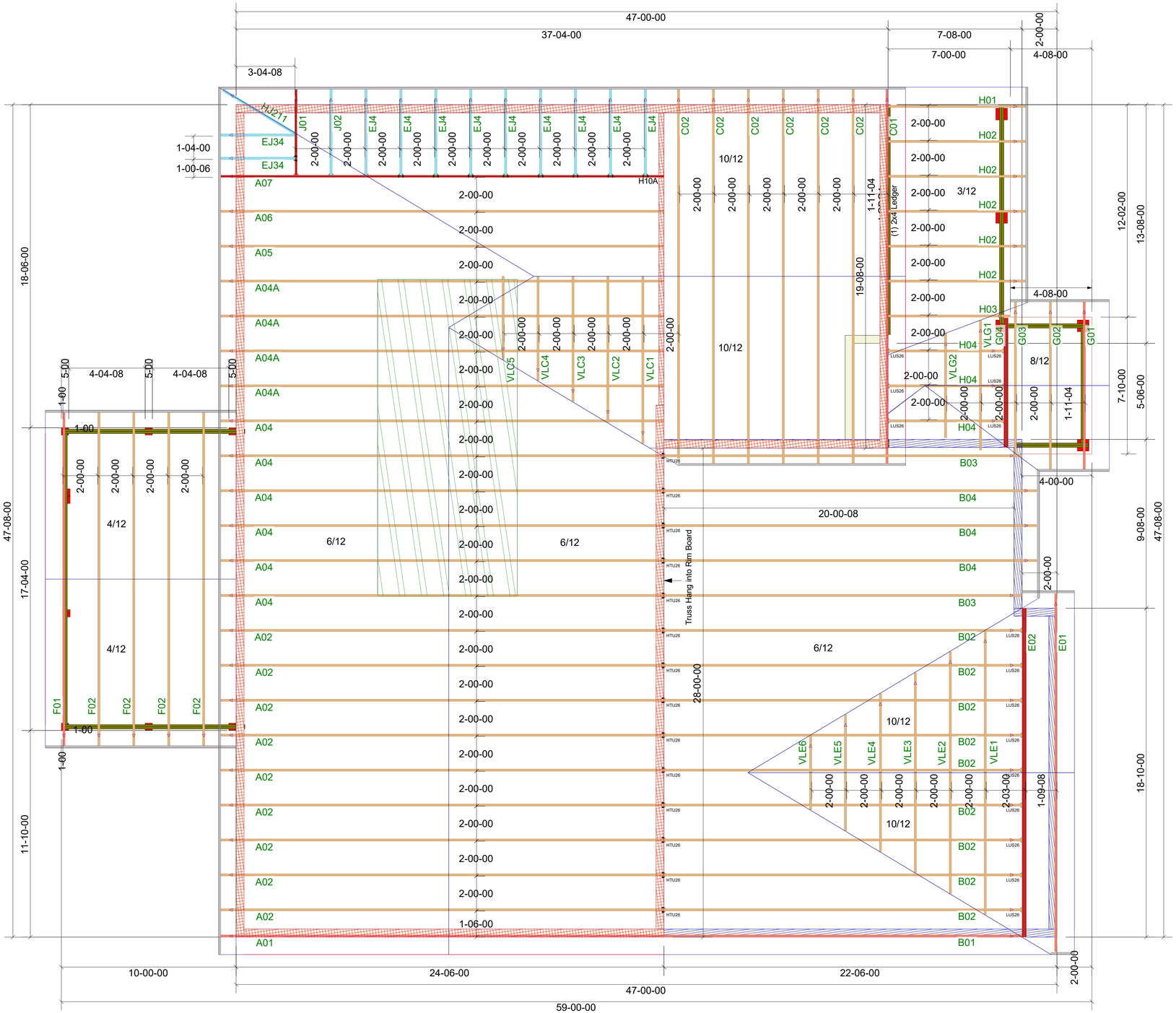

ALL UPLIFT CONNECTIONS ARE ONE H2.5A UNLESS OTHERWISE NOTED ON THE LAYOUT

Manuf	Product	Qty
Simpson	One H2.5A	83
Simpson	LUS26	15
Simpson	HTU26	14
Simpson	H10A	1

Truss Connector Total List

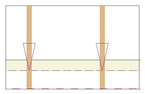

Truss Drawing Left End Indicator

** TRIANGULAR SYMBOL NEAR END OF TRUSS INDICATES LEFT END OF TRUSS AS SHOWN ON INDIVIDUAL TRUSS DRAWINGS. ** PLUMBING DROPS NOTED ARE IN THE APPROXIMATE LOCATIONS PER PLAN. BUILDER TO VERIFY LOCATIONS BEFORE SETTING TRUSSES. ** REFER TO FINAL TRUSS ENGINEERING SHEETS FOR PLY TO PLY CONNECTIONS.

Revisions	
00/00/00	Name
00/00/00	Name
00/00/00	Name
00/00/00	Name
00/00/00	Name

THIS IS A TRUSS PLACEMENT DIAGRAM ONLY. These trusses are designed as individual components to be incorporated into the building design at the specification of the building designer. See Individual design sheets for each truss design identified on the placement drawing. The building designer is responsible for temporary and permanent bracing of the roof and floor systems and for the overall structure. The design of the tuss support structure including headers, beams, walls, and columns is the responsibility of the building designer. For general guidance regarding the bracing consult "Bracing of Wood Trusses" available from the Truss Plate Institute, 583 D'Onofrio Drive: Madison, WI 53179

** All uplift connectors shown within these documents are recommendations only. Per ANSI/TPI 1, all uplift connectors are the responsibility of the bldg designer and or contractor.

** GIRDERS MUST BE FULLY CONNECTED TOGETHER PRIOR TO ADDING ANY LOADS. ** DIMENSIONS ARE READ AS: FOOT-INCH-SIXTEENTH.

CARTER Lumber

David Weekley Homes

1004 Serenity-Roof-328 A CP GLH

ROOF PLACEMENT PLAN

Scale: ***NTS***

Date: 3/25/2025

Designer: Mike Finch

Project Number: **25030123-01**

Sheet Number: **1/1**

Job	Truss	Truss Type	Qty	Ply	1004 Serenity-Roof-328 A CP GLH
25030123-01	A01	Common Supported Gable	1	1	I72264648 Job Reference (optional)

Carter Components (Sanford, NC), Sanford, NC - 27332, Run: 8.73 S Feb 19 2025 Print: 8.730 S Feb 19 2025 MiTek Industries, Inc. Tue Mar 25 09:15:22 Page: 1
ID:_6rcLElwA7tnlXY?wa67GkyzB5f-RfC?PsB70Hq3NSgPqnL8w3uITXbGKWrCDoi7J4zJC?f

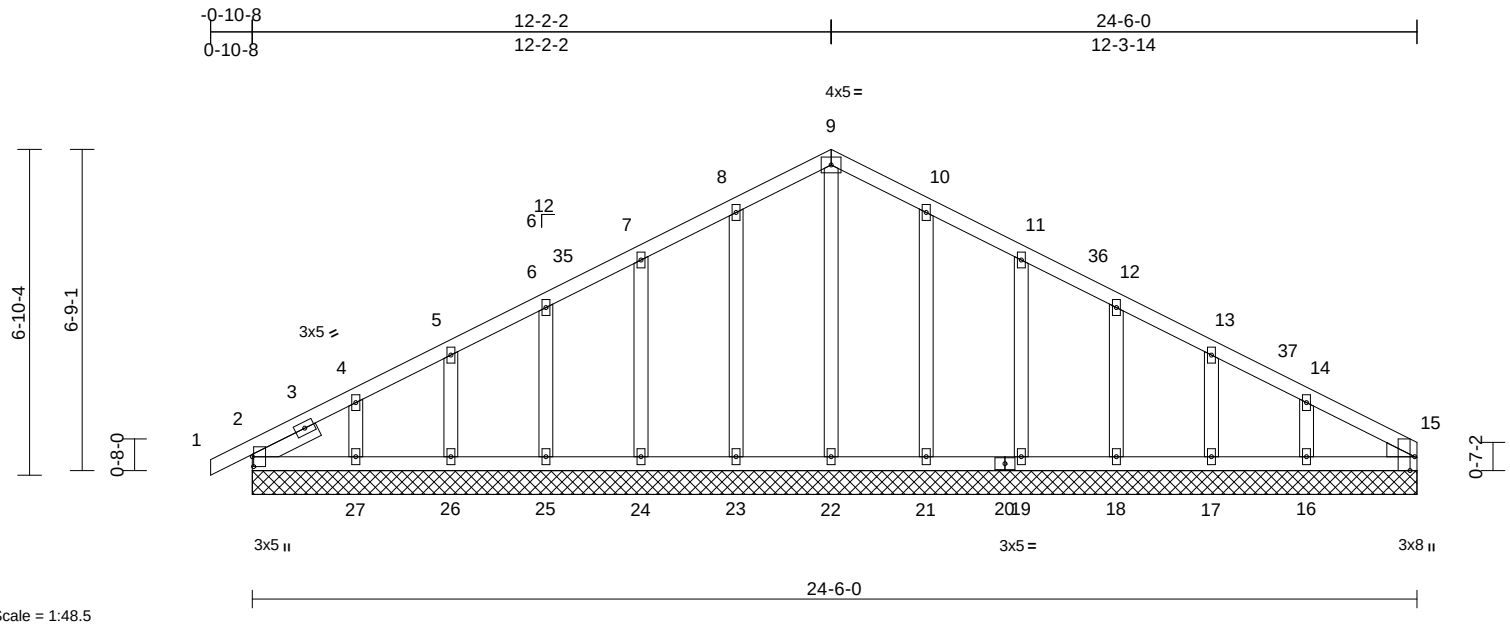

Scale = 1:48.5

Plate Offsets (X, Y): [2:0-2-8,0-0-5], [15:0-3-8,Edge]

Loading	(psf)	Spacing	2-0-0	CSI		DEFL	in	(loc)	l/defl	L/d	PLATES	GRIP
TCLL (roof)	20.0	Plate Grip DOL	1.15	TC	0.07	Vert(LL)	n/a	-	n/a	999	MT20	244/190
Snow (Pf)	20.0	Lumber DOL	1.15	BC	0.06	Vert(CT)	n/a	-	n/a	999		
TCDL	10.0	Rep Stress Incr	YES	WB	0.12	Horz(CT)	0.00	15	n/a	n/a		
BCLL	0.0*	Code	IRC2021/TPI2014	Matrix-MSH								
BCDL	10.0										Weight: 139 lb	FT = 20%

LUMBER

TOP CHORD 2x4 SP No.2
BOT CHORD 2x4 SP No.2
OTHERS 2x4 SP No.3
WEDGE Right: 2x4 SP No.3
SLIDER Left 2x4 SP No.3 -- 1-6-0

BRACING

TOP CHORD Structural wood sheathing directly applied or 6-0-0 oc purlins.
BOT CHORD Rigid ceiling directly applied or 10-0-0 oc bracing.

REACTIONS (size) 2=24-6-0, 15=24-6-0, 16=24-6-0, 17=24-6-0, 18=24-6-0, 19=24-6-0, 21=24-6-0, 22=24-6-0, 23=24-6-0, 24=24-6-0, 25=24-6-0, 26=24-6-0, 27=24-6-0
Max Horiz 2=109 (LC 18)
Max Uplift 2=-13 (LC 15), 16=-71 (LC 15), 17=-36 (LC 15), 18=-45 (LC 15), 19=-45 (LC 15), 21=-43 (LC 15), 23=-45 (LC 14), 24=-44 (LC 14), 25=-46 (LC 14), 26=-36 (LC 14), 27=-77 (LC 14)
Max Grav 2=149 (LC 1), 15=88 (LC 1), 16=197 (LC 37), 17=150 (LC 1), 18=178 (LC 22), 19=228 (LC 22), 21=245 (LC 22), 22=153 (LC 28), 23=245 (LC 21), 24=228 (LC 21), 25=176 (LC 21), 26=157 (LC 1), 27=171 (LC 36)

FORCES (lb) - Maximum Compression/Maximum Tension

TOP CHORD 1-2=0/23, 2-4=-117/49, 4-5=-87/56, 5-6=-66/79, 6-7=-64/102, 7-8=-75/147, 8-9=-89/191, 9-10=-89/191, 10-11=-75/147, 11-12=-64/101, 12-13=-51/55, 13-14=-59/17, 14-15=-77/23
BOT CHORD 2-27=-23/89, 26-27=-23/89, 25-26=-23/89, 24-25=-23/89, 23-24=-23/89, 22-23=-23/89, 21-22=-23/89, 19-21=-23/89, 18-19=-23/89, 17-18=-23/89, 16-17=-23/89, 15-16=-23/89
WEBS 9-22=-113/15, 8-23=-205/75, 7-24=-188/79, 6-25=-135/78, 5-26=-125/72, 4-27=-134/110, 10-21=-205/75, 11-19=-188/79, 12-18=-136/78, 13-17=-122/73, 14-16=-142/127

NOTES

1) Unbalanced roof live loads have been considered for this design.
2) Wind: ASCE 7-16; Vult=130mph (3-second gust) Vasd=103mph; TCDL=6.0psf; BCDL=6.0psf; h=25ft; Cat. II; Exp B; Enclosed; MWFRS (envelope) exterior zone and C-C Corner(3E) -0-10-8 to 2-2-2, Exterior(2N) 2-2-2 to 9-2-2, Corner(3R) 9-2-2 to 15-2-2, Exterior(2N) 15-2-2 to 21-6-0, Corner(3E) 21-6-0 to 24-6-0 zone; cantilever left and right exposed ; end vertical left and right exposed;C-C for members and forces & MWFRS for reactions shown; Lumber DOL=1.60 plate grip DOL=1.60
3) Truss designed for wind loads in the plane of the truss only. For studs exposed to wind (normal to the face), see Standard Industry Gable End Details as applicable, or consult qualified building designer as per ANSI/TPI 1.
4) TCLL: ASCE 7-16; Pr=20.0 psf (roof LL: Lum DOL=1.15 Plate DOL=1.15); Pf=20.0 psf (Lum DOL=1.15 Plate DOL=1.15); Is=1.0; Rough Cat B; Fully Exp.; Ce=0.9; Cs=1.00; Ct=1.10
5) Unbalanced snow loads have been considered for this design.
6) This truss has been designed for greater of min roof live load of 12.0 psf or 1.00 times flat roof load of 20.0 psf on overhangs non-concurrent with other live loads.
7) All plates are 2x4 MT20 unless otherwise indicated.
8) Gable requires continuous bottom chord bearing.
9) Gable studs spaced at 2-0-0 oc.
10) This truss has been designed for a 10.0 psf bottom chord live load nonconcurrent with any other live loads.
11) * This truss has been designed for a live load of 20.0psf on the bottom chord in all areas where a rectangle 3-06-00 tall by 2-00-00 wide will fit between the bottom chord and any other members.
12) Provide mechanical connection (by others) of truss to bearing plate capable of withstanding 13 lb uplift at joint 2, 45 lb uplift at joint 23, 44 lb uplift at joint 24, 46 lb uplift at joint 25, 36 lb uplift at joint 26, 77 lb uplift at joint 27, 43 lb uplift at joint 21, 45 lb uplift at joint 19, 45 lb uplift at joint 18, 36 lb uplift at joint 17, 71 lb uplift at joint 16 and 13 lb uplift at joint 2.

LOAD CASE(S) Standard

March 26,2025

WARNING - Verify design parameters and READ NOTES ON THIS AND INCLUDED MITEK REFERENCE PAGE MII-7473 rev. 1/2/2023 BEFORE USE.
Design valid for use only with MiTek® connectors. This design is based only upon parameters shown, and is for an individual building component, not a truss system. Before use, the building designer must verify the applicability of design parameters and properly incorporate this design into the overall building design. Bracing indicated is to prevent buckling of individual truss web and/or chord members only. Additional temporary and permanent bracing is always required for stability and to prevent collapse with possible personal injury and property damage. For general guidance regarding the fabrication, storage, delivery, erection and bracing of trusses and truss systems, see **ANSI/TPI1 Quality Criteria and DSB-22** available from Truss Plate Institute (www.tpinst.org) and **BCSI Building Component Safety Information** available from the Structural Building Component Association (www.sbcacomponents.com)

ENGINEERING BY TRENCO A MiTek Affiliate
818 Soundside Road
Edenton, NC 27932

Job	Truss	Truss Type	Qty	Ply	1004 Serenity-Roof-328 A CP GLH
25030123-01	A02	Common	9	1	I72264649 Job Reference (optional)

Carter Components (Sanford, NC), Sanford, NC - 27332,

Run: 8.73 S Feb 19 2025 Print: 8.730 S Feb 19 2025 MiTek Industries, Inc. Tue Mar 25 09:15:23 Page: 1
ID:sL1H2zO6Ev519wGE9Ha53QyzB67-RfC?PsB70Hq3NSgPqnL8w3uITXbGKWrCDoi7J4zJC?f

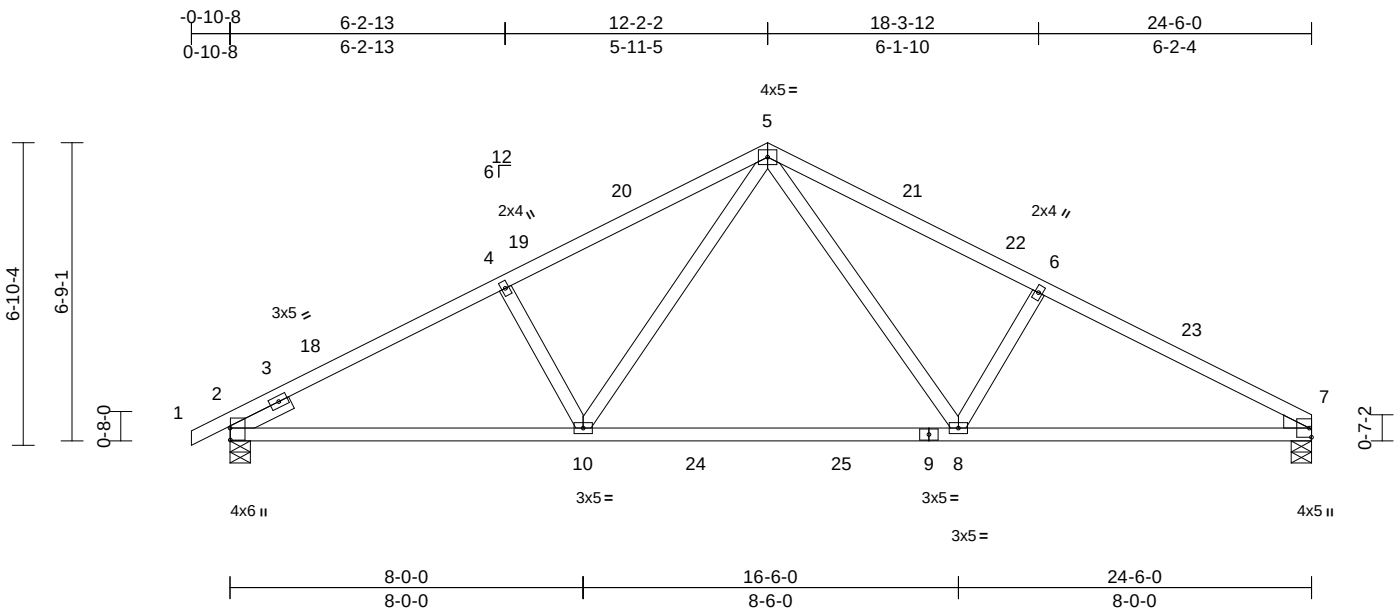

Scale = 1:52.2

Plate Offsets (X, Y): [2:0-3-4,0-0-1]

Loading	(psf)	Spacing	2-0-0	CSI		DEFL	in	(loc)	l/defl	L/d	PLATES	GRIP
TCLL (roof)	20.0	Plate Grip DOL	1.15	TC	0.98	Vert(LL)	-0.23	8-10	>999	240	MT20	244/190
Snow (Pf)	20.0	Lumber DOL	1.15	BC	0.81	Vert(CT)	-0.37	8-10	>785	180		
TCDL	10.0	Rep Stress Incr	YES	WB	0.30	Horz(CT)	0.05	7	n/a	n/a		
BCLL	0.0*	Code	IRC2021/TPI2014	Matrix-MSH								
BCDL	10.0										Weight: 115 lb	FT = 20%

LUMBER

TOP CHORD	2x4 SP No.2
BOT CHORD	2x4 SP No.2
WEBS	2x4 SP No.3
WEDGE	Right: 2x4 SP No.3
SLIDER	Left 2x4 SP No.3 -- 1-6-0

BRACING

TOP CHORD	Structural wood sheathing directly applied.
BOT CHORD	Rigid ceiling directly applied or 10-0-0 oc bracing.

REACTIONS (size) 2=0-5-8, 7=0-5-8
Max Horiz 2=109 (LC 18)
Max Uplift 2=-110 (LC 14), 7=-94 (LC 15)
Max Grav 2=1132 (LC 5), 7=1088 (LC 6)

FORCES (lb) - Maximum Compression/Maximum Tension

TOP CHORD	1-2=0/23, 2-4=-1918/250, 4-5=-1797/278, 5-6=-1835/283, 6-7=-1975/258
BOT CHORD	2-10=-191/1645, 8-10=-52/1113, 7-8=-163/1696
WEBS	4-10=-400/195, 5-10=-91/703, 5-8=-94/741, 6-8=-423/200

NOTES

1) Unbalanced roof live loads have been considered for this design.
2) Wind: ASCE 7-16; Vult=130mph (3-second gust) Vasd=103mph; TCDL=6.0psf; BCDL=6.0psf; h=25ft; Cat. II; Exp B; Enclosed; MWFRS (envelope) exterior zone and C-C Exterior(2E) -0-10-8 to 2-1-8, Interior (1) 2-1-8 to 9-2-2, Exterior(2R) 9-2-2 to 15-2-2, Interior (1) 15-2-2 to 21-6-0, Exterior(2E) 21-6-0 to 24-6-0 zone; cantilever left and right exposed ; end vertical left and right exposed;C-C for members and forces & MWFRS for reactions shown; Lumber DOL=1.60 plate grip DOL=1.60
3) TCLL: ASCE 7-16; Pr=20.0 psf (roof LL: Lum DOL=1.15 Plate DOL=1.15); Pf=20.0 psf (Lum DOL=1.15 Plate DOL=1.15); Is=1.0; Rough Cat B; Fully Exp.; Ce=0.9; Cs=1.00; Ct=1.10
4) Unbalanced snow loads have been considered for this design.
5) This truss has been designed for greater of min roof live load of 12.0 psf or 1.00 times flat roof load of 20.0 psf on overhangs non-concurrent with other live loads.
6) This truss has been designed for a 10.0 psf bottom chord live load nonconcurrent with any other live loads.
7) * This truss has been designed for a live load of 20.0psf on the bottom chord in all areas where a rectangle 3-06-00 tall by 2-00-00 wide will fit between the bottom chord and any other members, with BCDL = 10.0psf.
8) One H2.5A Simpson Strong-Tie connectors recommended to connect truss to bearing walls due to UPLIFT at jt(s) 2 and 7. This connection is for uplift only and does not consider lateral forces.

LOAD CASE(S) Standard

March 26,2025

WARNING - Verify design parameters and READ NOTES ON THIS AND INCLUDED MITEK REFERENCE PAGE MII-7473 rev. 1/2/2023 BEFORE USE.
Design valid for use only with MiTek® connectors. This design is based only upon parameters shown, and is for an individual building component, not a truss system. Before use, the building designer must verify the applicability of design parameters and properly incorporate this design into the overall building design. Bracing indicated is to prevent buckling of individual truss web and/or chord members only. Additional temporary and permanent bracing is always required for stability and to prevent collapse with possible personal injury and property damage. For general guidance regarding the fabrication, storage, delivery, erection and bracing of trusses and truss systems, see **ANSI/TPI1 Quality Criteria and DSB-22** available from Truss Plate Institute (www.tpinst.org) and **BCSI Building Component Safety Information** available from the Structural Building Component Association (www.sbcacomponents.com)

ENGINEERING BY TRENCO A MiTek Affiliate
818 Soundside Road
Edenton, NC 27932

Job	Truss	Truss Type	Qty	Ply	1004 Serenity-Roof-328 A CP GLH
25030123-01	A04	Common	6	1	I72264650 Job Reference (optional)

Carter Components (Sanford, NC), Sanford, NC - 27332, Run: 8.73 S Feb 19 2025 Print: 8.730 S Feb 19 2025 MiTek Industries, Inc. Tue Mar 25 09:15:23 Page: 1
ID:1N5k5UiLgOv7p9PHKp3jFOyzB70-RfC?PsB70Hq3NSgPqnL8w3uITXbGKWrCDoi7J4zJC?f

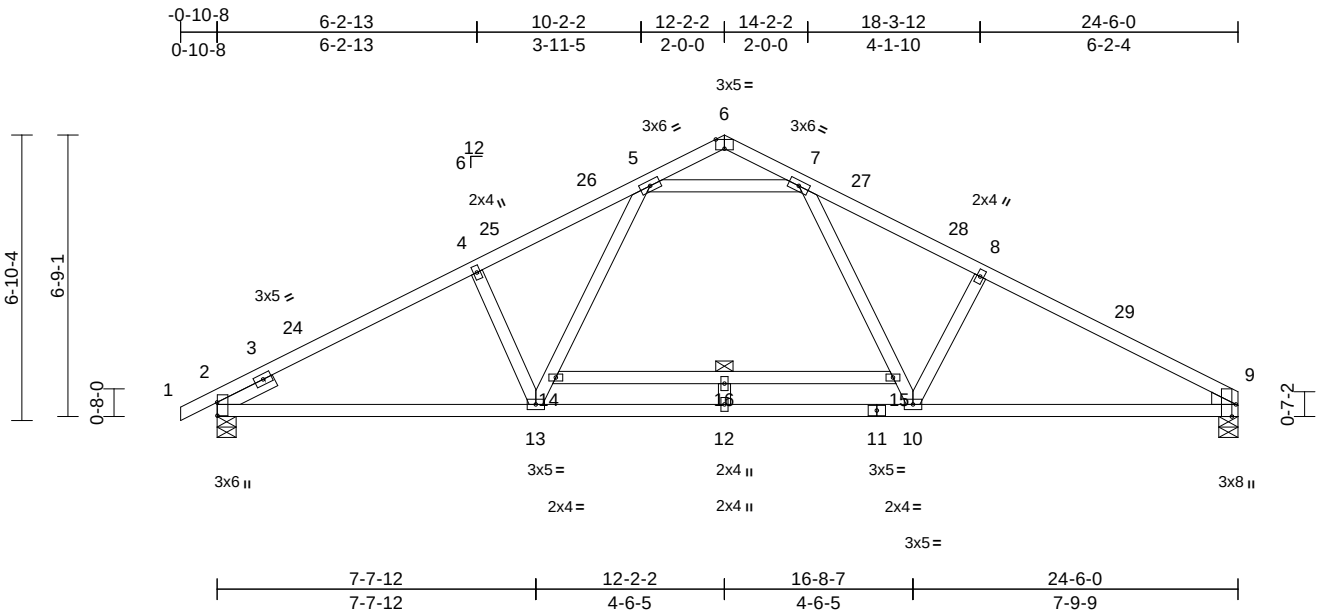

Scale = 1:55.3

Plate Offsets (X, Y): [2:0-3-13,0-0-1], [6:0-2-8,Edge], [9:0-3-8,Edge]

Loading	(psf)	Spacing	2-0-0	CSI		DEFL	in	(loc)	l/defl	L/d	PLATES	GRIP
TCLL (roof)	20.0	Plate Grip DOL	1.15	TC	0.68	Vert(LL)	-0.21	10-23	>999	240	MT20	244/190
Snow (Pf)	20.0	Lumber DOL	1.15	BC	0.61	Vert(CT)	-0.27	10-12	>999	180		
TCDL	10.0	Rep Stress Incr	YES	WB	0.48	Horz(CT)	0.05	9	n/a	n/a		
BCLL	0.0*	Code	IRC2021/TPI2014	Matrix-MSH								
BCDL	10.0										Weight: 129 lb	FT = 20%

LUMBER

TOP CHORD	2x4 SP No.2
BOT CHORD	2x4 SP No.2
WEBS	2x4 SP No.3
WEDGE	Right: 2x4 SP No.3
SLIDER	Left 2x4 SP No.3 -- 1-6-0

BRACING

TOP CHORD	Structural wood sheathing directly applied or 3-5-15 oc purlins.
BOT CHORD	Rigid ceiling directly applied or 10-0-0 oc bracing.
WEBS	1 Row at midpt 14-15

REACTIONS (size) 2=0-5-8, 9=0-5-8
Max Horiz 2=109 (LC 18)
Max Uplift 2=-110 (LC 14), 9=-94 (LC 15)
Max Grav 2=1063 (LC 21), 9=1009 (LC 22)

FORCES (lb) - Maximum Compression/Maximum Tension

TOP CHORD 1-2=0/23, 2-4=-1626/240, 4-5=-1512/270, 5-6=-138/46, 6-7=-144/51, 7-8=-1534/271, 8-9=-1682/248

BOT CHORD 2-13=-183/1396, 12-13=-80/1071, 10-12=-80/1071, 9-10=-152/1444

WEBS 4-13=-364/195, 13-14=-91/495, 5-14=-83/515, 7-15=-76/536, 10-15=-84/517, 8-10=-391/195, 14-16=-26/0, 15-16=-26/0, 12-16=0/50, 5-7=-1034/247

NOTES

1) Unbalanced roof live loads have been considered for this design.
2) Wind: ASCE 7-16; Vult=130mph (3-second gust) Vasd=103mph; TCDL=6.0psf; BCDL=6.0psf; h=25ft; Cat. II; Exp B; Enclosed; MWFRS (envelope) exterior zone and C-C Exterior(2E) -0-10-8 to 2-1-8, Interior (1) 2-1-8 to 9-2-2, Exterior(2R) 9-2-2 to 15-2-2, Interior (1) 15-2-2 to 21-6-0, Exterior(2E) 21-6-0 to 24-6-0 zone; end vertical left exposed;C-C for members and forces & MWFRS for reactions shown; Lumber DOL=1.60 plate grip DOL=1.60
3) TCLL: ASCE 7-16; Pr=20.0 psf (roof LL: Lum DOL=1.15 Plate DOL=1.15); Pf=20.0 psf (Lum DOL=1.15 Plate DOL=1.15); Is=1.0; Rough Cat B; Fully Exp.; Ce=0.9; Cs=1.00; Ct=1.10
4) Unbalanced snow loads have been considered for this design.
5) This truss has been designed for greater of min roof live load of 12.0 psf or 1.00 times flat roof load of 20.0 psf on overhangs non-concurrent with other live loads.
6) This truss has been designed for a 10.0 psf bottom chord live load nonconcurrent with any other live loads.
7) * This truss has been designed for a live load of 20.0psf on the bottom chord in all areas where a rectangle 3-06-00 tall by 2-00-00 wide will fit between the bottom chord and any other members.
8) One H2.5A Simpson Strong-Tie connectors recommended to connect truss to bearing walls due to UPLIFT at jt(s) 2 and 9. This connection is for uplift only and does not consider lateral forces.

LOAD CASE(S) Standard

March 26,2025

WARNING - Verify design parameters and READ NOTES ON THIS AND INCLUDED MITEK REFERENCE PAGE MII-7473 rev. 1/2/2023 BEFORE USE.
Design valid for use only with MiTek® connectors. This design is based only upon parameters shown, and is for an individual building component, not a truss system. Before use, the building designer must verify the applicability of design parameters and properly incorporate this design into the overall building design. Bracing indicated is to prevent buckling of individual truss web and/or chord members only. Additional temporary and permanent bracing is always required for stability and to prevent collapse with possible personal injury and property damage. For general guidance regarding the fabrication, storage, delivery, erection and bracing of trusses and truss systems, see **ANSI/TPI1 Quality Criteria and DSB-22** available from Truss Plate Institute (www.tpinst.org) and **BCSI Building Component Safety Information** available from the Structural Building Component Association (www.sbcacomponents.com)

ENGINEERING BY TRENCO A MiTek Affiliate
818 Soundside Road
Edenton, NC 27932

Job	Truss	Truss Type	Qty	Ply	1004 Serenity-Roof-328 A CP GLH
25030123-01	A04A	Common	4	1	I72264651 Job Reference (optional)

Carter Components (Sanford, NC), Sanford, NC - 27332, Run: 8.73 S Feb 19 2025 Print: 8.730 S Feb 19 2025 MiTek Industries, Inc. Tue Mar 25 09:15:24 Page: 1
ID:1N5k5UiLgOv7p9PHKp3jFOyzB70-RfC?PsB70Hq3NSgPqnL8w3uITXbGKWrCDoi7J4zJC?f

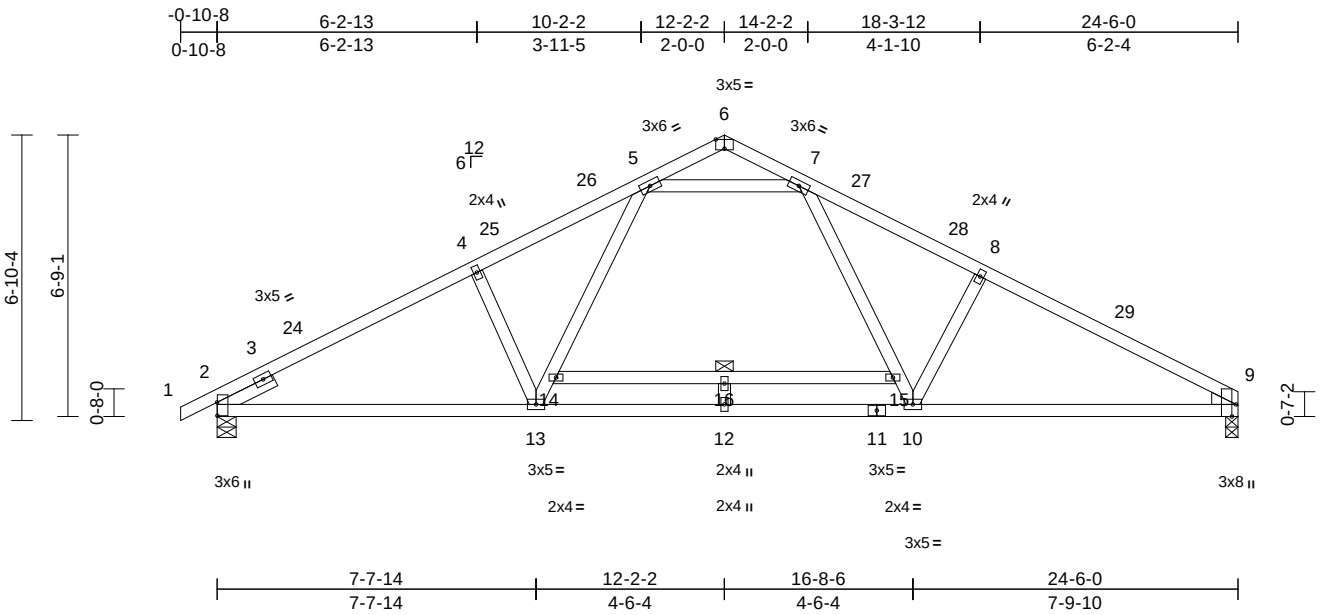

Scale = 1:55.3

Plate Offsets (X, Y): [2:0-3-13,0-0-1], [6:0-2-8,Edge], [9:0-3-8,Edge]

Loading	(psf)	Spacing	2-0-0	CSI		DEFL	in	(loc)	l/defl	L/d	PLATES	GRIP
TCLL (roof)	20.0	Plate Grip DOL	1.15	TC	0.68	Vert(LL)	-0.21	10-23	>999	240	MT20	244/190
Snow (Pf)	20.0	Lumber DOL	1.15	BC	0.62	Vert(CT)	-0.27	10-12	>999	180		
TCDL	10.0	Rep Stress Incr	YES	WB	0.48	Horz(CT)	0.05	9	n/a	n/a		
BCLL	0.0*	Code	IRC2021/TPI2014	Matrix-MSH								
BCDL	10.0										Weight: 129 lb	FT = 20%

LUMBER
TOP CHORD 2x4 SP No.2
BOT CHORD 2x4 SP No.2
WEBS 2x4 SP No.3
WEDGE Right: 2x4 SP No.3
SLIDER Left 2x4 SP No.3 -- 1-6-0

BRACING
TOP CHORD Structural wood sheathing directly applied or 3-5-15 oc purlins.
BOT CHORD Rigid ceiling directly applied or 10-0-0 oc bracing.
WEBS 1 Row at midpt 14-15

REACTIONS (size) 2=0-5-8, 9=0-3-8
Max Horiz 2=109 (LC 18)
Max Uplift 2=-110 (LC 14), 9=-94 (LC 15)
Max Grav 2=1063 (LC 21), 9=1009 (LC 22)

FORCES (lb) - Maximum Compression/Maximum Tension
TOP CHORD 1-2=0/23, 2-4=-1626/240, 4-5=-1511/269, 5-6=-138/46, 6-7=-144/51, 7-8=-1533/271, 8-9=-1682/249
BOT CHORD 2-13=-183/1396, 12-13=-80/1071, 10-12=-80/1071, 9-10=-152/1444
WEBS 4-13=-364/194, 13-14=-91/495, 5-14=-82/514, 7-15=-76/536, 10-15=-84/517, 8-10=-391/195, 14-16=-26/0, 15-16=-26/0, 5-7=-1034/247, 12-16=0/50

NOTES
1) Unbalanced roof live loads have been considered for this design.
2) Wind: ASCE 7-16; Vult=130mph (3-second gust) Vasd=103mph; TCDL=6.0psf; BCDL=6.0psf; h=25ft; Cat. II; Exp B; Enclosed; MWFRS (envelope) exterior zone and C-C Exterior(2E) -0-10-8 to 2-1-8, Interior (1) 2-1-8 to 9-2-2, Exterior(2R) 9-2-2 to 15-2-2, Interior (1) 15-2-2 to 21-6-0, Exterior(2E) 21-6-0 to 24-6-0 zone; end vertical left exposed;C-C for members and forces & MWFRS for reactions shown; Lumber DOL=1.60 plate grip DOL=1.60
3) TCLL: ASCE 7-16; Pr=20.0 psf (roof LL: Lum DOL=1.15 Plate DOL=1.15); Pf=20.0 psf (Lum DOL=1.15 Plate DOL=1.15); Is=1.0; Rough Cat B; Fully Exp.; Ce=0.9; Cs=1.00; Ct=1.10
4) Unbalanced snow loads have been considered for this design.
5) This truss has been designed for greater of min roof live load of 12.0 psf or 1.00 times flat roof load of 20.0 psf on overhangs non-concurrent with other live loads.
6) This truss has been designed for a 10.0 psf bottom chord live load nonconcurrent with any other live loads.
7) * This truss has been designed for a live load of 20.0psf on the bottom chord in all areas where a rectangle 3-06-00 tall by 2-00-00 wide will fit between the bottom chord and any other members.
8) One H2.5A Simpson Strong-Tie connectors recommended to connect truss to bearing walls due to UPLIFT at jt(s) 2 and 9. This connection is for uplift only and does not consider lateral forces.

LOAD CASE(S) Standard

March 26,2025

WARNING - Verify design parameters and READ NOTES ON THIS AND INCLUDED MITEK REFERENCE PAGE MII-7473 rev. 1/2/2023 BEFORE USE.
Design valid for use only with MiTek® connectors. This design is based only upon parameters shown, and is for an individual building component, not a truss system. Before use, the building designer must verify the applicability of design parameters and properly incorporate this design into the overall building design. Bracing indicated is to prevent buckling of individual truss web and/or chord members only. Additional temporary and permanent bracing is always required for stability and to prevent collapse with possible personal injury and property damage. For general guidance regarding the fabrication, storage, delivery, erection and bracing of trusses and truss systems, see **ANSI/TPI1 Quality Criteria and DSB-22** available from Truss Plate Institute (www.tpinst.org) and **BCSI Building Component Safety Information** available from the Structural Building Component Association (www.sbcacomponents.com)

ENGINEERING BY TRENCO A MiTek Affiliate
818 Soundside Road
Edenton, NC 27932

Job	Truss	Truss Type	Qty	Ply	1004 Serenity-Roof-328 A CP GLH
25030123-01	A05	Half Hip	1	1	I72264652 Job Reference (optional)

Carter Components (Sanford, NC), Sanford, NC - 27332, Run: 8.73 S Feb 19 2025 Print: 8.730 S Feb 19 2025 MiTek Industries, Inc. Tue Mar 25 09:15:24 Page: 1

ID:N_FUI7kAVpqTDsHve?dz?XyzB8G-RfC?PsB70Hq3NSgPqnL8w3uITXbGKWrCDoi7J4zJC?f

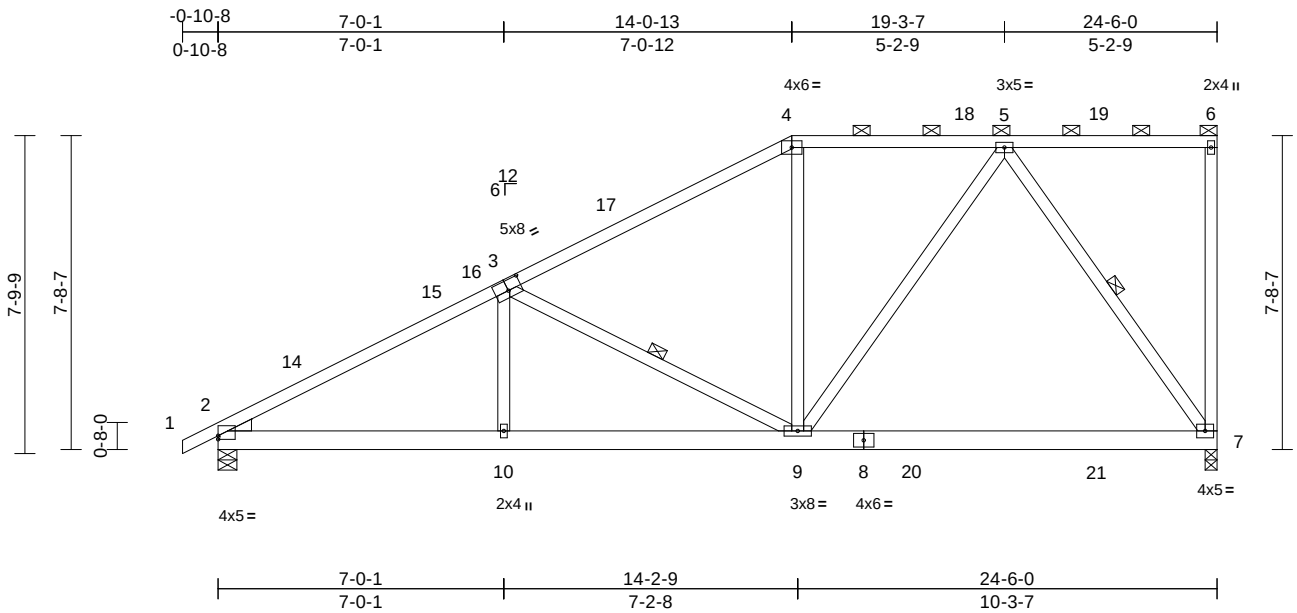

Scale = 1:56.5

Plate Offsets (X, Y): [2:Edge,0-1-1], [3:0-4-0,0-3-0]

Loading	(psf)	Spacing	2-0-0	CSI		DEFL	in	(loc)	l/defl	L/d	PLATES	GRIP
TCLL (roof)	20.0	Plate Grip DOL	1.15	TC	0.88	Vert(LL)	-0.16	7-9	>999	240	MT20	244/190
Snow (Pf)	20.0	Lumber DOL	1.15	BC	0.63	Vert(CT)	-0.26	7-9	>999	180		
TCDL	10.0	Rep Stress Incr	YES	WB	0.48	Horz(CT)	0.03	7	n/a	n/a		
BCLL	0.0*	Code	IRC2021/TPI2014	Matrix-MSH								
BCDL	10.0										Weight: 161 lb	FT = 20%

LUMBER

TOP CHORD 2x4 SP No.2
BOT CHORD 2x6 SP No.2
WEBS 2x4 SP No.3
WEDGE Left: 2x4 SP No.3

BRACING

TOP CHORD Structural wood sheathing directly applied or 2-2-0 oc purlins, except end verticals, and 2-0-0 oc purlins (5-6-8 max.): 4-6.
BOT CHORD Rigid ceiling directly applied or 10-0-0 oc bracing.
WEBS 1 Row at midpt 3-9, 5-7

REACTIONS (size) 2=0-5-8, 7=0-3-8
Max Horiz 2=272 (LC 14)
Max Uplift 2=-123 (LC 14), 7=-123 (LC 14)
Max Grav 2=1156 (LC 40), 7=1176 (LC 39)

FORCES (lb) - Maximum Compression/Maximum Tension
TOP CHORD 1-2=0/23, 2-4=-2014/185, 4-5=-1065/155, 5-6=-15/0, 6-7=-182/55
BOT CHORD 2-10=-344/1796, 9-10=-345/1794, 7-9=-108/683
WEBS 3-10=0/226, 3-9=-829/213, 4-9=0/233, 5-9=-82/801, 5-7=-1174/194

NOTES

1) Wind: ASCE 7-16; Vult=130mph (3-second gust) Vasd=103mph; TCDL=6.0psf; BCDL=6.0psf; h=25ft; Cat. II; Exp B; Enclosed; MWFRS (envelope) exterior zone and C-C Exterior(2E) -0-10-8 to 2-1-8, Interior (1) 2-1-8 to 9-9-15, Exterior(2R) 9-9-15 to 18-3-12, Interior (1) 18-3-12 to 21-4-4, Exterior(2E) 21-4-4 to 24-4-4 zone; end vertical left exposed;C-C for members and forces & MWFRS for reactions shown; Lumber DOL=1.60 plate grip DOL=1.60
2) TCLL: ASCE 7-16; Pr=20.0 psf (roof LL: Lum DOL=1.15 Plate DOL=1.15); Pf=20.0 psf (Lum DOL=1.15 Plate DOL=1.15); Is=1.0; Rough Cat B; Fully Exp.; Ce=0.9; Cs=1.00; Ct=1.10
3) Unbalanced snow loads have been considered for this design.
4) This truss has been designed for greater of min roof live load of 12.0 psf or 1.00 times flat roof load of 20.0 psf on overhangs non-concurrent with other live loads.
5) Provide adequate drainage to prevent water ponding.
6) This truss has been designed for a 10.0 psf bottom chord live load nonconcurrent with any other live loads.
7) * This truss has been designed for a live load of 20.0psf on the bottom chord in all areas where a rectangle 3-06-00 tall by 2-00-00 wide will fit between the bottom chord and any other members, with BCDL = 10.0psf.
8) One H2.5A Simpson Strong-Tie connectors recommended to connect truss to bearing walls due to UPLIFT at jt(s) 7 and 2. This connection is for uplift only and does not consider lateral forces.
9) Graphical purlin representation does not depict the size or the orientation of the purlin along the top and/or bottom chord.

LOAD CASE(S) Standard

March 26,2025

WARNING - Verify design parameters and READ NOTES ON THIS AND INCLUDED MITEK REFERENCE PAGE MII-7473 rev. 1/2/2023 BEFORE USE.
Design valid for use only with MiTek® connectors. This design is based only upon parameters shown, and is for an individual building component, not a truss system. Before use, the building designer must verify the applicability of design parameters and properly incorporate this design into the overall building design. Bracing indicated is to prevent buckling of individual truss web and/or chord members only. Additional temporary and permanent bracing is always required for stability and to prevent collapse with possible personal injury and property damage. For general guidance regarding the fabrication, storage, delivery, erection and bracing of trusses and truss systems, see **ANSI/TPI1 Quality Criteria and DSB-22** available from Truss Plate Institute (www.tpinst.org) and **BCSI Building Component Safety Information** available from the Structural Building Component Association (www.sbcacomponents.com)

ENGINEERING BY TRENCO A MiTek Affiliate
818 Soundside Road
Edenton, NC 27932

Job	Truss	Truss Type	Qty	Ply	1004 Serenity-Roof-328 A CP GLH
25030123-01	A06	Half Hip	1	1	I72264653 Job Reference (optional)

Carter Components (Sanford, NC), Sanford, NC - 27332,

Run: 8.73 S Feb 19 2025 Print: 8.730 S Feb 19 2025 MiTek Industries, Inc. Tue Mar 25 09:15:24 Page: 1
ID:8_hfrEPsdpZA5tIv6Y9sy2yzB8g-RfC?PsB70Hq3NSgPqnL8w3uITXbGKWrCDoi7J4zJC?f

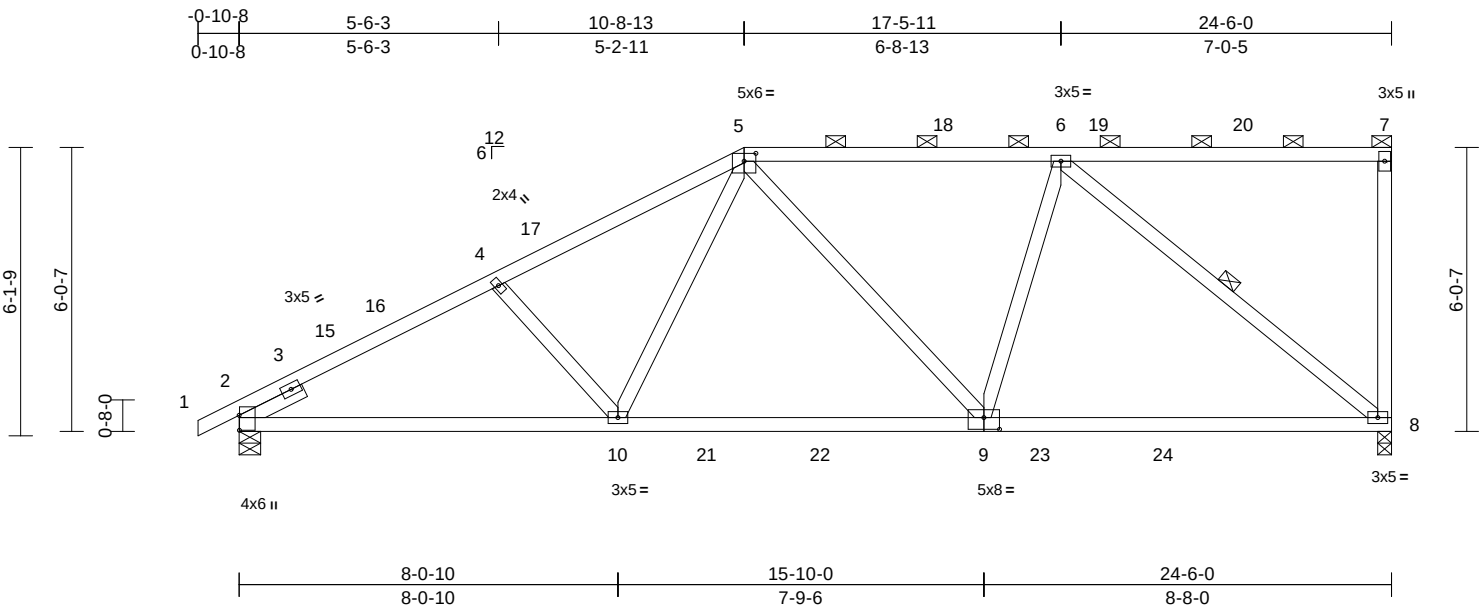

Scale = 1:49

Plate Offsets (X, Y): [2:0-3-13,0-0-1], [5:0-3-0,0-2-0], [9:0-4-0,0-3-0]

Loading	(psf)	Spacing	2-0-0	CSI		DEFL	in	(loc)	l/defl	L/d	PLATES	GRIP
TCLL (roof)	20.0	Plate Grip DOL	1.15	TC	1.00	Vert(LL)	-0.19	8-9	>999	240	MT20	244/190
Snow (Pf)	20.0	Lumber DOL	1.15	BC	0.89	Vert(CT)	-0.34	8-9	>851	180		
TCDL	10.0	Rep Stress Incr	YES	WB	0.65	Horz(CT)	0.05	8	n/a	n/a		
BCLL	0.0*	Code	IRC2021/TPI2014	Matrix-MSH								
BCDL	10.0										Weight: 134 lb	FT = 20%

LUMBER

TOP CHORD	2x4 SP No.2
BOT CHORD	2x4 SP No.2
WEBS	2x4 SP No.3
SLIDER	Left 2x4 SP No.3 -- 1-6-0

BRACING

TOP CHORD	Structural wood sheathing directly applied or 3-9-14 oc purlins, except end verticals, and 2-0-0 oc purlins (2-2-0 max.): 5-7.
BOT CHORD	Rigid ceiling directly applied or 10-0-0 oc bracing.
WEBS	1 Row at midpt 6-8

REACTIONS (size) 2=0-5-8, 8=0-3-8
Max Horiz 2=211 (LC 14)
Max Uplift 2=-132 (LC 14), 8=-136 (LC 11)
Max Grav 2=1164 (LC 40), 8=1240 (LC 39)

FORCES (lb) - Maximum Compression/Maximum Tension

TOP CHORD	1-2=0/23, 2-4=-1992/217, 4-5=-1769/206, 5-6=-1333/124, 6-7=-32/2, 7-8=-253/76
BOT CHORD	2-10=-325/1770, 8-10=-203/1322
WEBS	5-10=-38/622, 4-10=-414/163, 5-9=-226/124, 6-9=0/523, 6-8=-1563/173

NOTES

1) Wind: ASCE 7-16; Vult=130mph (3-second gust) Vasd=103mph; TCDL=6.0psf; BCDL=6.0psf; h=25ft; Cat. II; Exp B; Enclosed; MWFRS (envelope) exterior zone and C-C Exterior(2E) -0-10-8 to 2-1-8, Interior (1) 2-1-8 to 6-5-15, Exterior(2R) 6-5-15 to 14-11-12, Interior (1) 14-11-12 to 21-4-4, Exterior(2E) 21-4-4 to 24-4-4 zone; end vertical left exposed;C-C for members and forces & MWFRS for reactions shown; Lumber DOL=1.60 plate grip DOL=1.60
2) TCLL: ASCE 7-16; Pr=20.0 psf (roof LL: Lum DOL=1.15 Plate DOL=1.15); Pf=20.0 psf (Lum DOL=1.15 Plate DOL=1.15); Is=1.0; Rough Cat B; Fully Exp.; Ce=0.9; Cs=1.00; Ct=1.10
3) Unbalanced snow loads have been considered for this design.
4) This truss has been designed for greater of min roof live load of 12.0 psf or 1.00 times flat roof load of 20.0 psf on overhangs non-concurrent with other live loads.
5) Provide adequate drainage to prevent water ponding.
6) This truss has been designed for a 10.0 psf bottom chord live load nonconcurrent with any other live loads.
7) * This truss has been designed for a live load of 20.0psf on the bottom chord in all areas where a rectangle 3-06-00 tall by 2-00-00 wide will fit between the bottom chord and any other members, with BCDL = 10.0psf.
8) One H2.5A Simpson Strong-Tie connectors recommended to connect truss to bearing walls due to UPLIFT at jt(s) 8 and 2. This connection is for uplift only and does not consider lateral forces.
9) Graphical purlin representation does not depict the size or the orientation of the purlin along the top and/or bottom chord.

LOAD CASE(S) Standard

March 26,2025

WARNING - Verify design parameters and READ NOTES ON THIS AND INCLUDED MITEK REFERENCE PAGE MII-7473 rev. 1/2/2023 BEFORE USE.
Design valid for use only with MiTek® connectors. This design is based only upon parameters shown, and is for an individual building component, not a truss system. Before use, the building designer must verify the applicability of design parameters and properly incorporate this design into the overall building design. Bracing indicated is to prevent buckling of individual truss web and/or chord members only. Additional temporary and permanent bracing is always required for stability and to prevent collapse with possible personal injury and property damage. For general guidance regarding the fabrication, storage, delivery, erection and bracing of trusses and truss systems, see **ANSI/TPI1 Quality Criteria and DSB-22** available from Truss Plate Institute (www.tpinst.org) and **BCSI Building Component Safety Information** available from the Structural Building Component Association (www.sbcacomponents.com)

ENGINEERING BY TRENCO A MiTek Affiliate
818 Soundside Road
Edenton, NC 27932

Job	Truss	Truss Type	Qty	Ply	1004 Serenity-Roof-328 A CP GLH
25030123-01	A07	Half Hip Girder	1	1	I72264654 Job Reference (optional)

Carter Components (Sanford, NC), Sanford, NC - 27332, Run: 8.73 S Feb 19 2025 Print: 8.730 S Feb 19 2025 MiTek Industries, Inc. Tue Mar 25 09:15:24 Page: 1
ID:LxL4nxeDZSif7gIvCyYAAlyzBCF-RfC?PsB70Hq3NSgPqnL8w3uITXbGKWrCDoi7J4zJC?f

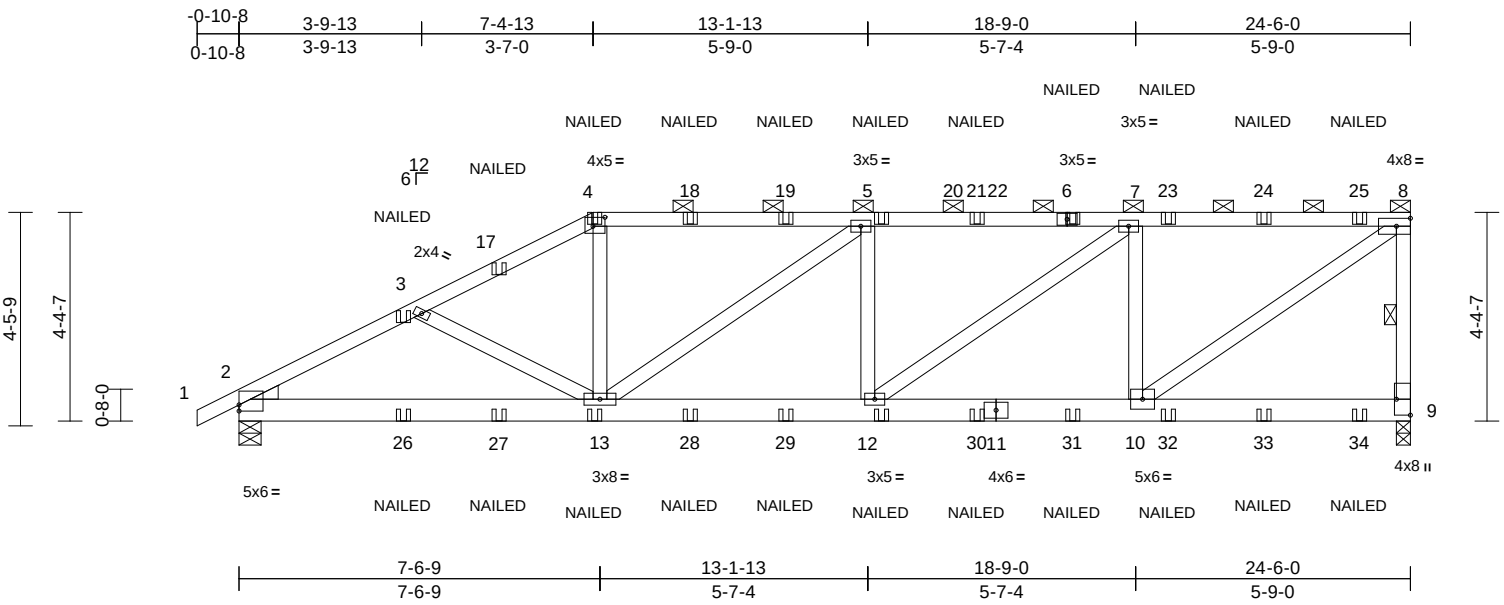

Scale = 1:48.2

Plate Offsets (X, Y): [2:Edge,0-1-9], [4:0-3-0,0-2-4], [9:Edge,0-3-8]

Loading	(psf)	Spacing	2-0-0	CSI		DEFL	in	(loc)	l/defl	L/d	PLATES	GRIP
TCLL (roof)	20.0	Plate Grip DOL	1.15	TC	0.90	Vert(LL)	-0.15	12-13	>999	240	MT20	244/190
Snow (Pf)	20.0	Lumber DOL	1.15	BC	0.96	Vert(CT)	-0.23	12-13	>999	180		
TCDL	10.0	Rep Stress Incr	NO	WB	0.68	Horz(CT)	0.05	9	n/a	n/a		
BCLL	0.0*	Code	IRC2021/TPI2014	Matrix-MSH								
BCDL	10.0										Weight: 154 lb	FT = 20%

LUMBER

TOP CHORD 2x4 SP No.1 *Except* 1-4:2x4 SP No.2
BOT CHORD 2x6 SP No.2
WEBS 2x4 SP No.3 *Except* 8-10,5-13,7-12:2x4 SP No.2
WEDGE Left: 2x4 SP No.3

BRACING

TOP CHORD Structural wood sheathing directly applied or 2-9-4 oc purlins, except end verticals, and 2-0-0 oc purlins (2-8-6 max.): 4-8.
BOT CHORD Rigid ceiling directly applied or 7-5-6 oc bracing.
WEBS 1 Row at midpt 8-9

REACTIONS (size) 2=0-5-8, 9=0-3-8
Max Horiz 2=150 (LC 12)
Max Uplift 2=-501 (LC 12), 9=-646 (LC 9)
Max Grav 2=1847 (LC 34), 9=1996 (LC 33)

FORCES (lb) - Maximum Compression/Maximum Tension
TOP CHORD 1-2=0/35, 2-3=-3066/929, 3-4=-2807/879, 4-5=-2522/822, 5-7=-3070/990, 7-8=-2242/722, 8-9=-1891/645
BOT CHORD 2-13=-912/2662, 12-13=-990/3070, 10-12=-722/2242, 9-10=-17/44
WEBS 4-13=-152/721, 3-13=-361/109, 8-10=-866/2700, 5-12=-396/223, 5-13=-673/272, 7-12=-368/1030, 7-10=-1357/530

NOTES

1) Wind: ASCE 7-16; Vult=130mph (3-second gust) Vasd=103mph; TCDL=6.0psf; BCDL=6.0psf; h=25ft; Cat. II; Exp B; Enclosed; MWFRS (envelope) exterior zone; end vertical left exposed; Lumber DOL=1.60 plate grip DOL=1.60
2) TCLL: ASCE 7-16; Pr=20.0 psf (roof LL: Lum DOL=1.15 Plate DOL=1.15); Pf=20.0 psf (Lum DOL=1.15 Plate DOL=1.15); Is=1.0; Rough Cat B; Fully Exp.; Ce=0.9; Cs=1.00; Ct=1.10
3) Unbalanced snow loads have been considered for this design.
4) This truss has been designed for greater of min roof live load of 12.0 psf or 1.00 times flat roof load of 20.0 psf on overhangs non-concurrent with other live loads.
5) Provide adequate drainage to prevent water ponding.
6) This truss has been designed for a 10.0 psf bottom chord live load nonconcurrent with any other live loads.
7) * This truss has been designed for a live load of 20.0psf on the bottom chord in all areas where a rectangle 3-06-00 tall by 2-00-00 wide will fit between the bottom chord and any other members.
8) H10A Simpson Strong-Tie connectors recommended to connect truss to bearing walls due to UPLIFT at jt(s) 9. This connection is for uplift only and does not consider lateral forces.
9) One H2.5A Simpson Strong-Tie connectors recommended to connect truss to bearing walls due to UPLIFT at jt(s) 2. This connection is for uplift only and does not consider lateral forces.
10) Graphical purlin representation does not depict the size or the orientation of the purlin along the top and/or bottom chord.
11) "NAILED" indicates 3-10d (0.148"x3") or 3-12d (0.148"x3.25") toe-nails per NDS guidlines.
12) In the LOAD CASE(S) section, loads applied to the face of the truss are noted as front (F) or back (B).

LOAD CASE(S) Standard

1) Dead + Snow (balanced): Lumber Increase=1.15, Plate Increase=1.15
Uniform Loads (lb/ft)
Vert: 1-4=-60, 4-8=-60, 9-14=-20
Concentrated Loads (lb)
Vert: 4=-111 (F), 6=-111 (F), 13=-34 (F), 3=-116 (F), 5=-111 (F), 12=-34 (F), 17=-25 (F), 18=-111 (F), 19=-111 (F), 21=-111 (F), 23=-111 (F), 24=-111 (F), 25=-113 (F), 26=-95 (F), 27=-83 (F), 28=-34 (F), 29=-34 (F), 30=-34 (F), 31=-34 (F), 32=-34 (F), 33=-34 (F), 34=-35 (F)

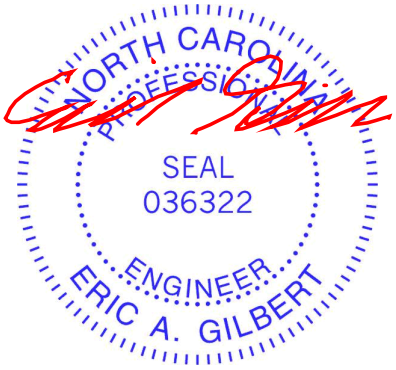

March 26,2025

WARNING - Verify design parameters and READ NOTES ON THIS AND INCLUDED MITEK REFERENCE PAGE MII-7473 rev. 1/2/2023 BEFORE USE.
Design valid for use only with MiTek® connectors. This design is based only upon parameters shown, and is for an individual building component, not a truss system. Before use, the building designer must verify the applicability of design parameters and properly incorporate this design into the overall building design. Bracing indicated is to prevent buckling of individual truss web and/or chord members only. Additional temporary and permanent bracing is always required for stability and to prevent collapse with possible personal injury and property damage. For general guidance regarding the fabrication, storage, delivery, erection and bracing of trusses and truss systems, see **ANSI/TPI1 Quality Criteria and DSB-22** available from Truss Plate Institute (www.tpinst.org) and **BCSI Building Component Safety Information** available from the Structural Building Component Association (www.sbcacomponents.com)

ENGINEERING BY TRENCO A MiTek Affiliate
818 Soundside Road
Edenton, NC 27932

Job	Truss	Truss Type	Qty	Ply	1004 Serenity-Roof-328 A CP GLH
25030123-01	B01	Monopitch Supported Gable	1	1	I72264655 Job Reference (optional)

Carter Components (Sanford, NC), Sanford, NC - 27332, Run: 8.73 S Feb 19 2025 Print: 8.730 S Feb 19 2025 MiTek Industries, Inc. Tue Mar 25 09:15:25 Page: 1
ID:pRYBEe4gu7lwx_7UFLIIXlyzBJR-RfC?PsB70Hq3NSgPqnL8w3uITXbGKWrCDoi7J4zJC?f

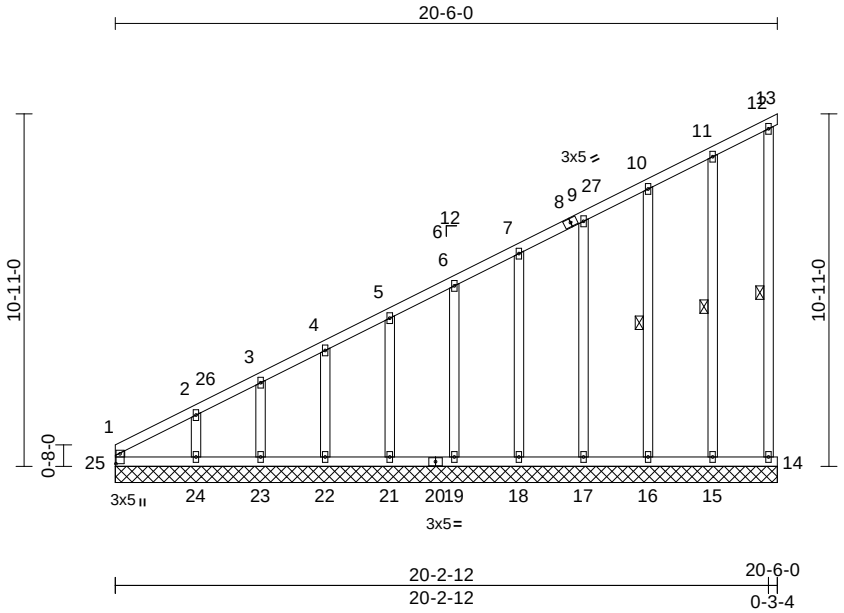

Scale = 1:71.4

Plate Offsets (X, Y): [25:0-3-11,0-1-8]

Loading	(psf)	Spacing	2-0-0	CSI		DEFL	in	(loc)	l/defl	L/d	PLATES	GRIP
TCLL (roof)	20.0	Plate Grip DOL	1.15	TC	0.29	Vert(LL)	n/a	-	n/a	999	MT20	244/190
Snow (Pf)	20.0	Lumber DOL	1.15	BC	0.19	Vert(TL)	n/a	-	n/a	999		
TCDL	10.0	Rep Stress Incr	YES	WB	0.15	Horiz(TL)	-0.02	13	n/a	n/a		
BCLL	0.0*	Code	IRC2021/TPI2014	Matrix-MR								
BCDL	10.0										Weight: 152 lb	FT = 20%

LUMBER
TOP CHORD 2x4 SP No.2
BOT CHORD 2x4 SP No.2
WEBS 2x4 SP No.3 *Except* 12-14:2x4 SP No.2
OTHERS 2x4 SP No.3

BRACING
TOP CHORD Structural wood sheathing directly applied or 6-0-0 oc purlins, except end verticals.
BOT CHORD Rigid ceiling directly applied or 10-0-0 oc bracing.
WEBS 1 Row at midpt 12-14, 11-15, 10-16

REACTIONS (size) 13=20-6-0, 14=20-6-0, 15=20-6-0, 16=20-6-0, 17=20-6-0, 18=20-6-0, 19=20-6-0, 21=20-6-0, 22=20-6-0, 23=20-6-0, 24=20-6-0, 25=20-6-0
Max Horiz 25=373 (LC 14)
Max Uplift 13=-11 (LC 14), 14=-16 (LC 14), 15=-41 (LC 14), 16=-45 (LC 14), 17=-43 (LC 14), 18=-44 (LC 14), 19=-44 (LC 14), 21=-41 (LC 14), 22=-53 (LC 14), 23=-5 (LC 14), 24=-171 (LC 14)
Max Grav 13=23 (LC 20), 14=83 (LC 20), 15=235 (LC 20), 16=233 (LC 20), 17=177 (LC 20), 18=160 (LC 1), 19=161 (LC 20), 21=159 (LC 1), 22=163 (LC 20), 23=147 (LC 20), 24=202 (LC 1), 25=253 (LC 14)

FORCES (lb) - Maximum Compression/Maximum Tension
TOP CHORD 1-25=-209/69, 1-2=-492/192, 2-3=-389/156, 3-4=-355/143, 4-5=-306/123, 5-6=-260/105, 6-7=-213/87, 7-9=-167/69, 9-10=-121/52, 10-11=-74/42, 11-12=-45/22, 12-13=-7/9, 12-14=-69/26
BOT CHORD 24-25=-1/0, 23-24=-1/0, 22-23=-1/0, 21-22=-1/0, 19-21=-1/0, 18-19=-1/0, 17-18=-1/0, 16-17=-1/0, 15-16=-1/0, 14-15=-1/0
WEBS 11-15=-194/79, 10-16=-193/81, 9-17=-137/79, 7-18=-126/80, 6-19=-127/80, 5-21=-126/78, 4-22=-129/86, 3-23=-113/53, 2-24=-172/204

NOTES
1) Wind: ASCE 7-16; Vult=130mph (3-second gust) Vasd=103mph; TCDL=6.0psf; BCDL=6.0psf; h=25ft; Cat. II; Exp B; Enclosed; MWFRS (envelope) exterior zone and C-C Corner(3E) 0-1-12 to 3-1-12, Exterior(2N) 3-1-12 to 20-6-0 zone;C-C for members and forces & MWFRS for reactions shown; Lumber DOL=1.60 plate grip DOL=1.60
2) Truss designed for wind loads in the plane of the truss only. For studs exposed to wind (normal to the face), see Standard Industry Gable End Details as applicable, or consult qualified building designer as per ANSI/TPI 1.
3) TCLL: ASCE 7-16; Pr=20.0 psf (roof LL: Lum DOL=1.15 Plate DOL=1.15); Pf=20.0 psf (Lum DOL=1.15 Plate DOL=1.15); Is=1.0; Rough Cat B; Fully Exp.; Ce=0.9; Cs=1.00; Ct=1.10
4) Unbalanced snow loads have been considered for this design.
5) All plates are 2x4 MT20 unless otherwise indicated.
6) Gable requires continuous bottom chord bearing.
7) Truss to be fully sheathed from one face or securely braced against lateral movement (i.e. diagonal web).
8) Gable studs spaced at 2-0-0 oc.
9) This truss has been designed for a 10.0 psf bottom chord live load nonconcurrent with any other live loads.
10) * This truss has been designed for a live load of 20.0psf on the bottom chord in all areas where a rectangle 3-06-00 tall by 2-00-00 wide will fit between the bottom chord and any other members.
11) Bearing at joint(s) 13 considers parallel to grain value using ANSI/TPI 1 angle to grain formula. Building designer should verify capacity of bearing surface.
12) Provide mechanical connection (by others) of truss to bearing plate capable of withstanding 11 lb uplift at joint 13, 16 lb uplift at joint 14, 41 lb uplift at joint 15, 45 lb uplift at joint 16, 43 lb uplift at joint 17, 44 lb uplift at joint 18, 44 lb uplift at joint 19, 41 lb uplift at joint 21, 53 lb uplift at joint 22, 5 lb uplift at joint 23 and 171 lb uplift at joint 24.

LOAD CASE(S) Standard

March 26,2025

WARNING - Verify design parameters and READ NOTES ON THIS AND INCLUDED MITEK REFERENCE PAGE MII-7473 rev. 1/2/2023 BEFORE USE.
Design valid for use only with MiTek® connectors. This design is based only upon parameters shown, and is for an individual building component, not a truss system. Before use, the building designer must verify the applicability of design parameters and properly incorporate this design into the overall building design. Bracing indicated is to prevent buckling of individual truss web and/or chord members only. Additional temporary and permanent bracing is always required for stability and to prevent collapse with possible personal injury and property damage. For general guidance regarding the fabrication, storage, delivery, erection and bracing of trusses and truss systems, see **ANSI/TPI1 Quality Criteria and DSB-22** available from Truss Plate Institute (www.tpinst.org) and **BCSI Building Component Safety Information** available from the Structural Building Component Association (www.sbcacomponents.com)

ENGINEERING BY TRENCO A MiTek Affiliate
818 Soundside Road
Edenton, NC 27932

Job	Truss	Truss Type	Qty	Ply	1004 Serenity-Roof-328 A CP GLH
25030123-01	B02	Monopitch	9	1	I72264656 Job Reference (optional)

Carter Components (Sanford, NC), Sanford, NC - 27332, Run: 8.73 S Feb 19 2025 Print: 8.730 S Feb 19 2025 MiTek Industries, Inc. Tue Mar 25 09:15:25 Page: 1

ID:DTBTk2iEBbrKjDFXxKE1mCyzBJw-RfC?PsB70Hq3NSgPqnL8w3uITXbGKWrCDoi7J4zJC?f

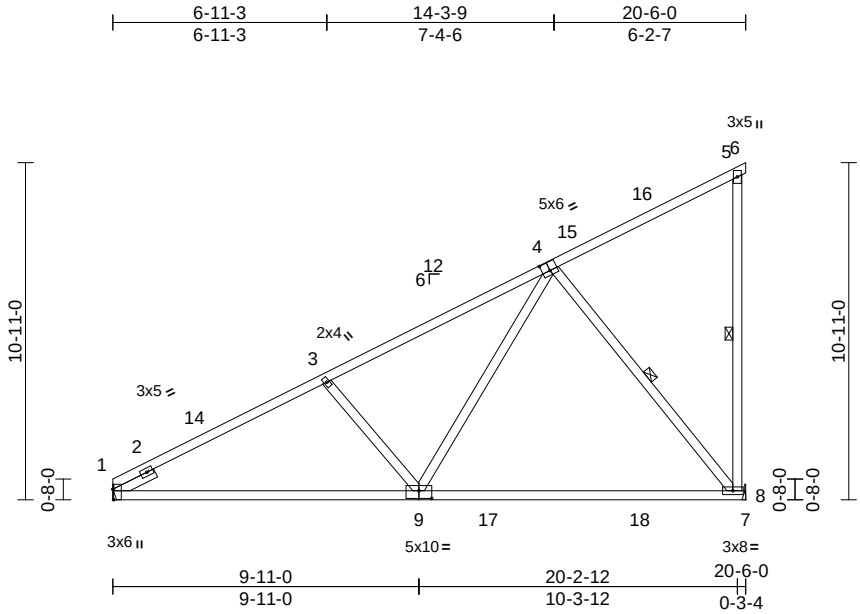

Scale = 1:74.6

Plate Offsets (X, Y): [1:0-4-1,Edge], [4:0-3-0,0-3-4], [9:0-5-0,0-3-0]

Loading	(psf)	Spacing	2-0-0	CSI		DEFL	in	(loc)	l/defl	L/d	PLATES	GRIP
TCLL (roof)	20.0	Plate Grip DOL	1.15	TC	0.72	Vert(LL)	-0.48	8-9	>504	240	MT20	244/190
Snow (Pf)	20.0	Lumber DOL	1.15	BC	0.91	Vert(CT)	-0.73	8-9	>331	180		
TCDL	10.0	Rep Stress Incr	YES	WB	0.43	Horz(CT)	0.02	8	n/a	n/a		
BCLL	0.0*	Code	IRC2021/TPI2014	Matrix-MSH								
BCDL	10.0										Weight: 115 lb	FT = 20%

LUMBER

TOP CHORD 2x4 SP No.2
BOT CHORD 2x4 SP No.1
WEBS 2x4 SP No.3 *Except* 5-8:2x4 SP No.2
SLIDER Left 2x4 SP No.3 -- 1-6-0

BRACING

TOP CHORD Structural wood sheathing directly applied or 4-8-11 oc purlins, except end verticals.
BOT CHORD Rigid ceiling directly applied or 8-3-12 oc bracing.
WEBS 1 Row at midpt 5-8, 4-8

REACTIONS (size) 1= Mechanical, 8= Mechanical
Max Horiz 1=375 (LC 14)
Max Uplift 1=-27 (LC 14), 8=-232 (LC 14)
Max Grav 1=898 (LC 5), 8=1065 (LC 5)

FORCES (lb) - Maximum Compression/Maximum Tension
TOP CHORD 1-3=-1402/34, 3-5=-1185/96, 5-6=-12/0, 5-8=-271/90
BOT CHORD 1-8=-408/1298, 7-8=0/0
WEBS 4-8=-923/258, 4-9=-51/875, 3-9=-408/222

NOTES

1) Wind: ASCE 7-16; Vult=130mph (3-second gust) Vasd=103mph; TCDL=6.0psf; BCDL=6.0psf; h=25ft; Cat. II; Exp B; Enclosed; MWFRS (envelope) exterior zone and C-C Exterior(2E) 0-0-0 to 3-0-0, Interior (1) 3-0-0 to 17-6-0, Exterior(2E) 17-6-0 to 20-6-0 zone;C-C for members and forces & MWFRS for reactions shown; Lumber DOL=1.60 plate grip DOL=1.60
2) TCLL: ASCE 7-16; Pr=20.0 psf (roof LL: Lum DOL=1.15 Plate DOL=1.15); Pf=20.0 psf (Lum DOL=1.15 Plate DOL=1.15); Is=1.0; Rough Cat B; Fully Exp.; Ce=0.9; Cs=1.00; Ct=1.10
3) Unbalanced snow loads have been considered for this design.
4) This truss has been designed for a 10.0 psf bottom chord live load nonconcurrent with any other live loads.
5) * This truss has been designed for a live load of 20.0psf on the bottom chord in all areas where a rectangle 3-06-00 tall by 2-00-00 wide will fit between the bottom chord and any other members, with BCDL = 10.0psf.
6) Refer to girder(s) for truss to truss connections.
7) Provide mechanical connection (by others) of truss to bearing plate capable of withstanding 232 lb uplift at joint 8 and 27 lb uplift at joint 1.

LOAD CASE(S) Standard

March 26,2025

WARNING - Verify design parameters and READ NOTES ON THIS AND INCLUDED MITEK REFERENCE PAGE MII-7473 rev. 1/2/2023 BEFORE USE.
Design valid for use only with MiTek® connectors. This design is based only upon parameters shown, and is for an individual building component, not a truss system. Before use, the building designer must verify the applicability of design parameters and properly incorporate this design into the overall building design. Bracing indicated is to prevent buckling of individual truss web and/or chord members only. Additional temporary and permanent bracing is always required for stability and to prevent collapse with possible personal injury and property damage. For general guidance regarding the fabrication, storage, delivery, erection and bracing of trusses and truss systems, see **ANSI/TPI1 Quality Criteria and DSB-22** available from Truss Plate Institute (www.tpinst.org) and **BCSI Building Component Safety Information** available from the Structural Building Component Association (www.sbcacomponents.com)

ENGINEERING BY TRENCO A MiTek Affiliate
818 Soundside Road
Edenton, NC 27932

Job	Truss	Truss Type	Qty	Ply	1004 Serenity-Roof-328 A CP GLH
25030123-01	B03	Monopitch	2	1	I72264657 Job Reference (optional)

Carter Components (Sanford, NC), Sanford, NC - 27332, Run: 8.73 S Feb 19 2025 Print: 8.730 S Feb 19 2025 MiTek Industries, Inc. Tue Mar 25 09:15:25 Page: 1
ID:KLIp2cdP9FdyXYyQD889fRyzBLJ-RfC?PsB70Hq3NSgPqnL8w3uITXbGKWrCDoi7J4zJC?f

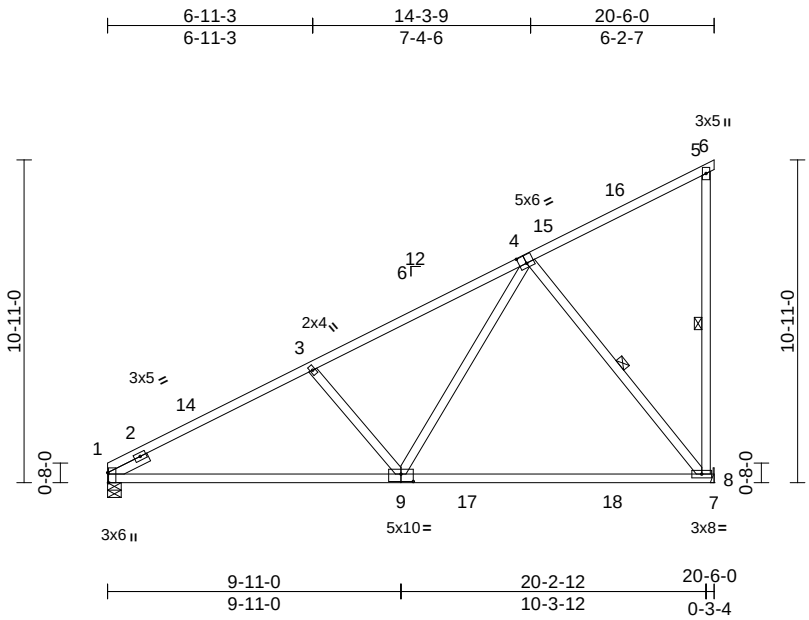

Scale = 1:77.9

Plate Offsets (X, Y): [1:0-4-1,Edge], [4:0-3-0,0-3-4], [9:0-5-0,0-3-0]

Loading	(psf)	Spacing	2-0-0	CSI		DEFL	in	(loc)	l/defl	L/d	PLATES	GRIP
TCLL (roof)	20.0	Plate Grip DOL	1.15	TC	0.72	Vert(LL)	-0.48	8-9	>504	240	MT20	244/190
Snow (Pf)	20.0	Lumber DOL	1.15	BC	0.91	Vert(CT)	-0.73	8-9	>331	180		
TCDL	10.0	Rep Stress Incr	YES	WB	0.43	Horz(CT)	0.02	8	n/a	n/a		
BCLL	0.0*	Code	IRC2021/TPI2014	Matrix-MSH								
BCDL	10.0										Weight: 115 lb	FT = 20%

LUMBER
TOP CHORD 2x4 SP No.2
BOT CHORD 2x4 SP No.1
WEBS 2x4 SP No.3 *Except* 5-8:2x4 SP No.2
SLIDER Left 2x4 SP No.3 -- 1-6-0

BRACING
TOP CHORD Structural wood sheathing directly applied or 4-8-11 oc purlins, except end verticals.
BOT CHORD Rigid ceiling directly applied or 8-3-12 oc bracing.
WEBS 1 Row at midpt 5-8, 4-8

REACTIONS (size) 1=0-5-8, 8= Mechanical
Max Horiz 1=375 (LC 14)
Max Uplift 1=-27 (LC 14), 8=-232 (LC 14)
Max Grav 1=898 (LC 5), 8=1065 (LC 5)

FORCES (lb) - Maximum Compression/Maximum Tension
TOP CHORD 1-3=-1402/34, 3-5=-1185/96, 5-6=-12/0, 5-8=-271/90
BOT CHORD 1-8=-408/1298, 7-8=0/0
WEBS 4-8=-923/258, 4-9=-51/875, 3-9=-408/222

NOTES
1) Wind: ASCE 7-16; Vult=130mph (3-second gust) Vasd=103mph; TCDL=6.0psf; BCDL=6.0psf; h=25ft; Cat. II; Exp B; Enclosed; MWFRS (envelope) exterior zone and C-C Exterior(2E) 0-0-0 to 3-0-0, Interior (1) 3-0-0 to 17-6-0, Exterior(2E) 17-6-0 to 20-6-0 zone; end vertical left exposed;C-C for members and forces & MWFRS for reactions shown; Lumber DOL=1.60 plate grip DOL=1.60
2) TCLL: ASCE 7-16; Pr=20.0 psf (roof LL: Lum DOL=1.15 Plate DOL=1.15); Pf=20.0 psf (Lum DOL=1.15 Plate DOL=1.15); Is=1.0; Rough Cat B; Fully Exp.; Ce=0.9; Cs=1.00; Ct=1.10
3) Unbalanced snow loads have been considered for this design.
4) This truss has been designed for a 10.0 psf bottom chord live load nonconcurrent with any other live loads.
5) * This truss has been designed for a live load of 20.0psf on the bottom chord in all areas where a rectangle 3-06-00 tall by 2-00-00 wide will fit between the bottom chord and any other members, with BCDL = 10.0psf.
6) Refer to girder(s) for truss to truss connections.
7) Provide mechanical connection (by others) of truss to bearing plate capable of withstanding 232 lb uplift at joint 8.
8) One H2.5A Simpson Strong-Tie connectors recommended to connect truss to bearing walls due to UPLIFT at jt(s) 1. This connection is for uplift only and does not consider lateral forces.

LOAD CASE(S) Standard

March 26,2025

WARNING - Verify design parameters and READ NOTES ON THIS AND INCLUDED MITEK REFERENCE PAGE MII-7473 rev. 1/2/2023 BEFORE USE.
Design valid for use only with MiTek® connectors. This design is based only upon parameters shown, and is for an individual building component, not a truss system. Before use, the building designer must verify the applicability of design parameters and properly incorporate this design into the overall building design. Bracing indicated is to prevent buckling of individual truss web and/or chord members only. Additional temporary and permanent bracing is always required for stability and to prevent collapse with possible personal injury and property damage. For general guidance regarding the fabrication, storage, delivery, erection and bracing of trusses and truss systems, see **ANSI/TPI1 Quality Criteria and DSB-22** available from Truss Plate Institute (www.tpinst.org) and **BCSI Building Component Safety Information** available from the Structural Building Component Association (www.sbcacomponents.com)

ENGINEERING BY TRENCO A MiTek Affiliate
818 Soundside Road
Edenton, NC 27932

Job	Truss	Truss Type	Qty	Ply	1004 Serenity-Roof-328 A CP GLH
25030123-01	B04	Monopitch	3	1	I72264658 Job Reference (optional)

Carter Components (Sanford, NC), Sanford, NC - 27332, Run: 8.73 S Feb 19 2025 Print: 8.730 S Feb 19 2025 MiTek Industries, Inc. Tue Mar 25 09:15:25 Page: 1
ID:uKtrJGkYuK_5qa1S4NLaLYyzBNl-RfC?PsB70Hq3NSgPqnL8w3uITXbGKWrCDoi7J4zJC?f

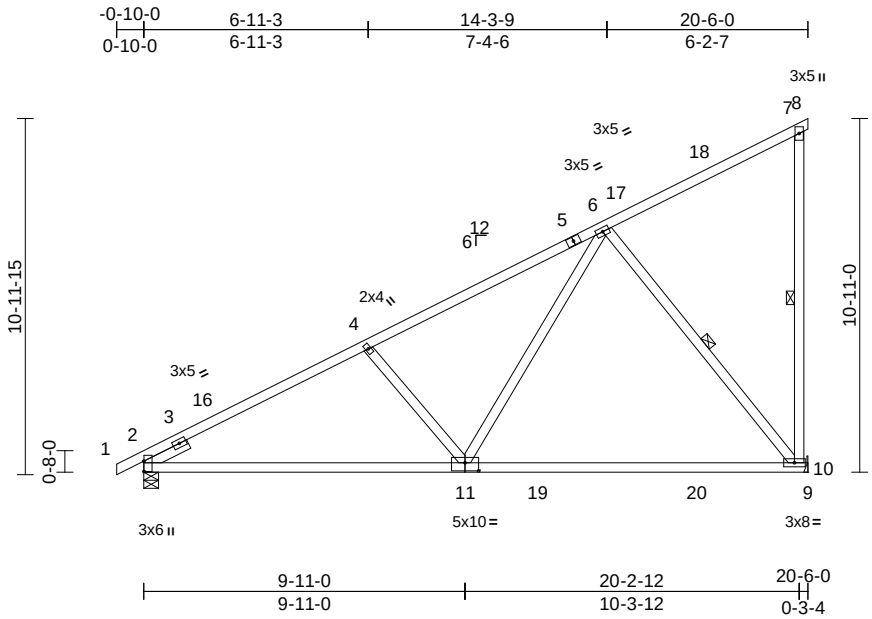

Scale = 1:71.1

Plate Offsets (X, Y): [2:0-3-13,0-0-1], [11:0-5-0,0-3-0]

Loading	(psf)	Spacing	2-0-0	CSI		DEFL	in	(loc)	l/defl	L/d	PLATES	GRIP
TCLL (roof)	20.0	Plate Grip DOL	1.15	TC	0.72	Vert(LL)	-0.48	10-11	>504	240	MT20	244/190
Snow (Pf)	20.0	Lumber DOL	1.15	BC	0.91	Vert(CT)	-0.73	10-11	>330	180		
TCDL	10.0	Rep Stress Incr	YES	WB	0.43	Horz(CT)	0.02	10	n/a	n/a		
BCLL	0.0*	Code	IRC2021/TPI2014	Matrix-MSH								
BCDL	10.0										Weight: 117 lb	FT = 20%

LUMBER
TOP CHORD 2x4 SP No.2
BOT CHORD 2x4 SP No.1
WEBS 2x4 SP No.3 *Except* 7-10:2x4 SP No.2
SLIDER Left 2x4 SP No.3 -- 1-6-0

BRACING
TOP CHORD Structural wood sheathing directly applied or 4-10-6 oc purlins, except end verticals.
BOT CHORD Rigid ceiling directly applied or 8-3-12 oc bracing.
WEBS 1 Row at midpt 7-10, 6-10

REACTIONS (size) 2=0-5-8, 10= Mechanical
Max Horiz 2=388 (LC 14)
Max Uplift 2=-43 (LC 14), 10=-232 (LC 14)
Max Grav 2=942 (LC 5), 10=1071 (LC 5)

FORCES (lb) - Maximum Compression/Maximum Tension
TOP CHORD 1-2=0/22, 2-4=-1400/34, 4-6=-1183/25, 6-7=-155/95, 7-8=-12/0, 7-10=-269/88
BOT CHORD 2-10=-399/1296, 9-10=0/0
WEBS 6-10=-919/258, 6-11=-52/880, 4-11=-411/224

NOTES
1) Wind: ASCE 7-16; Vult=130mph (3-second gust) Vasd=103mph; TCDL=6.0psf; BCDL=6.0psf; h=25ft; Cat. II; Exp B; Enclosed; MWFRS (envelope) exterior zone and C-C Exterior(2E) -0-10-0 to 2-2-0, Interior (1) 2-2-0 to 17-6-0, Exterior(2E) 17-6-0 to 20-6-0 zone; end vertical left exposed;C-C for members and forces & MWFRS for reactions shown; Lumber DOL=1.60 plate grip DOL=1.60
2) TCLL: ASCE 7-16; Pr=20.0 psf (roof LL: Lum DOL=1.15 Plate DOL=1.15); Pf=20.0 psf (Lum DOL=1.15 Plate DOL=1.15); Is=1.0; Rough Cat B; Fully Exp.; Ce=0.9; Cs=1.00; Ct=1.10
3) Unbalanced snow loads have been considered for this design.
4) This truss has been designed for greater of min roof live load of 12.0 psf or 1.00 times flat roof load of 20.0 psf on overhangs non-concurrent with other live loads.
5) This truss has been designed for a 10.0 psf bottom chord live load nonconcurrent with any other live loads.
6) * This truss has been designed for a live load of 20.0psf on the bottom chord in all areas where a rectangle 3-06-00 tall by 2-00-00 wide will fit between the bottom chord and any other members, with BCDL = 10.0psf.
7) Refer to girder(s) for truss to truss connections.
8) Provide mechanical connection (by others) of truss to bearing plate capable of withstanding 232 lb uplift at joint 10.
9) One H2.5A Simpson Strong-Tie connectors recommended to connect truss to bearing walls due to UPLIFT at jt(s) 2. This connection is for uplift only and does not consider lateral forces.

LOAD CASE(S) Standard

March 26,2025

WARNING - Verify design parameters and READ NOTES ON THIS AND INCLUDED MITEK REFERENCE PAGE MII-7473 rev. 1/2/2023 BEFORE USE.
Design valid for use only with MiTek® connectors. This design is based only upon parameters shown, and is for an individual building component, not a truss system. Before use, the building designer must verify the applicability of design parameters and properly incorporate this design into the overall building design. Bracing indicated is to prevent buckling of individual truss web and/or chord members only. Additional temporary and permanent bracing is always required for stability and to prevent collapse with possible personal injury and property damage. For general guidance regarding the fabrication, storage, delivery, erection and bracing of trusses and truss systems, see **ANSI/TPI1 Quality Criteria and DSB-22** available from Truss Plate Institute (www.tpinst.org) and **BCSI Building Component Safety Information** available from the Structural Building Component Association (www.sbcacomponents.com)

ENGINEERING BY TRENCO A MiTek Affiliate
818 Soundside Road
Edenton, NC 27932

Job	Truss	Truss Type	Qty	Ply	1004 Serenity-Roof-328 A CP GLH
25030123-01	C01	Common Supported Gable	1	1	I72264659 Job Reference (optional)

Carter Components (Sanford, NC), Sanford, NC - 27332, Run: 8.73 S Feb 19 2025 Print: 8.730 S Feb 19 2025 MiTek Industries, Inc. Tue Mar 25 09:15:25 Page: 1

ID:y?lVUHJnnTWv5Ac?yd58OGyzBFF-RfC?PsB70Hq3NSgPqnL8w3uITXbGKWrCDoi7J4zJC?f

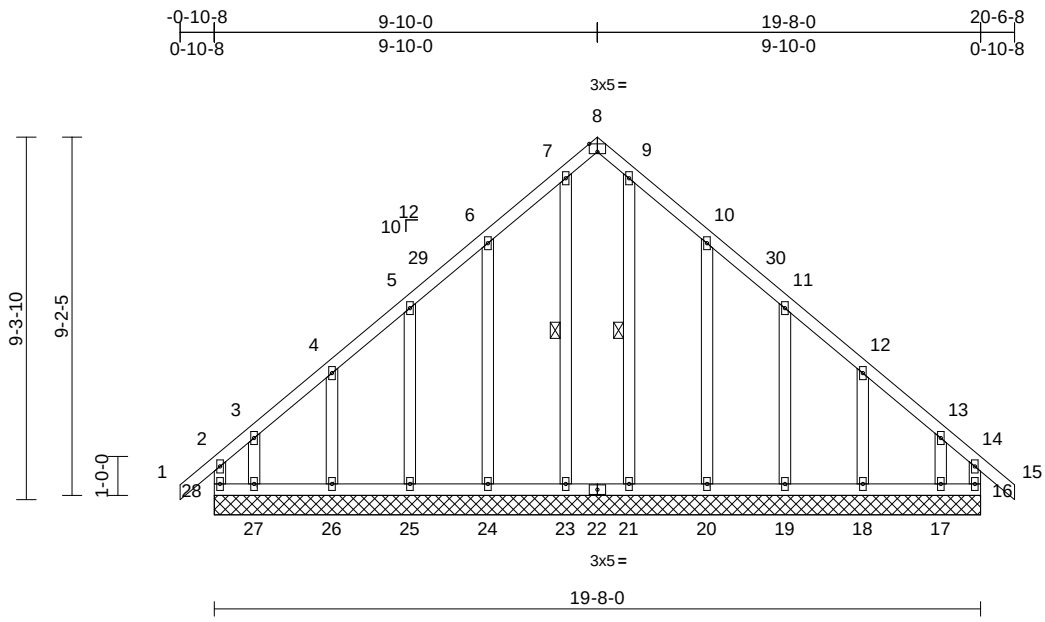

Scale = 1:59.1

Plate Offsets (X, Y): [8:0-2-8,Edge]

Loading	(psf)	Spacing	2-0-0	CSI		DEFL	in	(loc)	l/defl	L/d	PLATES	GRIP
TCLL (roof)	20.0	Plate Grip DOL	1.15	TC	0.20	Vert(LL)	n/a	-	n/a	999	MT20	244/190
Snow (Pf)	20.0	Lumber DOL	1.15	BC	0.12	Vert(CT)	n/a	-	n/a	999		
TCDL	10.0	Rep Stress Incr	YES	WB	0.18	Horz(CT)	0.00	16	n/a	n/a		
BCLL	0.0*	Code	IRC2021/TPI2014	Matrix-MR								
BCDL	10.0										Weight: 142 lb	FT = 20%

LUMBER

TOP CHORD 2x4 SP No.2
BOT CHORD 2x4 SP No.2
WEBS 2x4 SP No.3
OTHERS 2x4 SP No.3

BRACING

TOP CHORD Structural wood sheathing directly applied or 6-0-0 oc purlins, except end verticals.
BOT CHORD Rigid ceiling directly applied or 6-0-0 oc bracing.
WEBS 1 Row at midpt 7-23, 9-21

REACTIONS (size) 16=19-8-0, 17=19-8-0, 18=19-8-0, 19=19-8-0, 20=19-8-0, 21=19-8-0, 23=19-8-0, 24=19-8-0, 25=19-8-0, 26=19-8-0, 27=19-8-0, 28=19-8-0
Max Horiz 28=-236 (LC 12)
Max Uplift 16=-116 (LC 13), 17=-212 (LC 15), 18=-68 (LC 15), 19=-74 (LC 15), 20=-103 (LC 15), 24=-101 (LC 14), 25=-75 (LC 14), 26=-67 (LC 14), 27=-225 (LC 14), 28=-161 (LC 12)
Max Grav 16=230 (LC 15), 17=193 (LC 13), 18=176 (LC 26), 19=175 (LC 22), 20=260 (LC 22), 21=210 (LC 22), 23=210 (LC 21), 24=260 (LC 21), 25=175 (LC 21), 26=174 (LC 25), 27=219 (LC 12), 28=252 (LC 14)

FORCES (lb) - Maximum Compression/Maximum Tension

TOP CHORD 2-28=-173/105, 1-2=0/39, 2-3=-237/179, 3-4=-134/128, 4-5=-105/102, 5-6=-84/122, 6-7=-109/182, 7-8=-85/129, 8-9=-85/129, 9-10=-109/171, 10-11=-64/106, 11-12=-79/73, 12-13=-116/98, 13-14=-218/141, 14-15=0/39, 14-16=-156/74
BOT CHORD 27-28=-113/157, 26-27=-113/157, 25-26=-113/157, 24-25=-113/157, 23-24=-113/157, 21-23=-113/157, 20-21=-113/157, 19-20=-113/157, 18-19=-113/157, 17-18=-113/157, 16-17=-113/157
WEBS 7-23=-175/10, 9-21=-175/6, 6-24=-219/126, 5-25=-147/96, 4-26=-156/100, 3-27=-133/155, 10-20=-219/128, 11-19=-147/96, 12-18=-156/100, 13-17=-124/148

NOTES

1) Unbalanced roof live loads have been considered for this design.
2) Wind: ASCE 7-16; Vult=130mph (3-second gust) Vasd=103mph; TCDL=6.0psf; BCDL=6.0psf; h=25ft; Cat. II; Exp B; Enclosed; MWFRS (envelope) exterior zone and C-C Exterior(2E) -0-10-8 to 2-1-8, Interior (1) 2-1-8 to 6-10-0, Exterior(2R) 6-10-0 to 12-7-12, Interior (1) 12-7-12 to 17-6-8, Exterior(2E) 17-6-8 to 20-6-8 zone; end vertical left and right exposed;C-C for members and forces & MWFRS for reactions shown; Lumber DOL=1.60 plate grip DOL=1.60
3) Truss designed for wind loads in the plane of the truss only. For studs exposed to wind (normal to the face), see Standard Industry Gable End Details as applicable, or consult qualified building designer as per ANSI/TPI 1.
4) TCLL: ASCE 7-16; Pr=20.0 psf (roof LL: Lum DOL=1.15 Plate DOL=1.15); Pf=20.0 psf (Lum DOL=1.15 Plate DOL=1.15); Is=1.0; Rough Cat B; Fully Exp.; Ce=0.9; Cs=1.00; Ct=1.10
5) Unbalanced snow loads have been considered for this design.
6) This truss has been designed for greater of min roof live load of 12.0 psf or 1.00 times flat roof load of 20.0 psf on overhangs non-concurrent with other live loads.
7) All plates are 2x4 MT20 unless otherwise indicated.
8) Gable requires continuous bottom chord bearing.
9) Truss to be fully sheathed from one face or securely braced against lateral movement (i.e. diagonal web).
10) Gable studs spaced at 2-0-0 oc.
11) This truss has been designed for a 10.0 psf bottom chord live load nonconcurrent with any other live loads.
12) * This truss has been designed for a live load of 20.0psf on the bottom chord in all areas where a rectangle 3-06-00 tall by 2-00-00 wide will fit between the bottom chord and any other members.
13) Provide mechanical connection (by others) of truss to bearing plate capable of withstanding 161 lb uplift at joint 28, 116 lb uplift at joint 16, 101 lb uplift at joint 24, 75 lb uplift at joint 25, 67 lb uplift at joint 26, 225 lb uplift at joint 27, 103 lb uplift at joint 20, 74 lb uplift at joint 19, 68 lb uplift at joint 18 and 212 lb uplift at joint 17.

LOAD CASE(S) Standard

March 26,2025

WARNING - Verify design parameters and READ NOTES ON THIS AND INCLUDED MITEK REFERENCE PAGE MII-7473 rev. 1/2/2023 BEFORE USE.
Design valid for use only with MiTek® connectors. This design is based only upon parameters shown, and is for an individual building component, not a truss system. Before use, the building designer must verify the applicability of design parameters and properly incorporate this design into the overall building design. Bracing indicated is to prevent buckling of individual truss web and/or chord members only. Additional temporary and permanent bracing is always required for stability and to prevent collapse with possible personal injury and property damage. For general guidance regarding the fabrication, storage, delivery, erection and bracing of trusses and truss systems, see **ANSI/TPI1 Quality Criteria and DSB-22** available from Truss Plate Institute (www.tpinst.org) and **BCSI Building Component Safety Information** available from the Structural Building Component Association (www.sbcacomponents.com)

ENGINEERING BY TRENCO A MiTek Affiliate
818 Soundside Road
Edenton, NC 27932

Job	Truss	Truss Type	Qty	Ply	1004 Serenity-Roof-328 A CP GLH
25030123-01	C02	Common	6	1	I72264660 Job Reference (optional)

Carter Components (Sanford, NC), Sanford, NC - 27332,

Run: 8.73 S Feb 19 2025 Print: 8.730 S Feb 19 2025 MiTek Industries, Inc. Tue Mar 25 09:15:25 Page: 1
ID:veOhTnYiIJvCs5ZfZ6xbfGyzBEy-RfC?PsB70Hq3NSgPqnL8w3uITXbGKWrCDoi7J4zJC?f

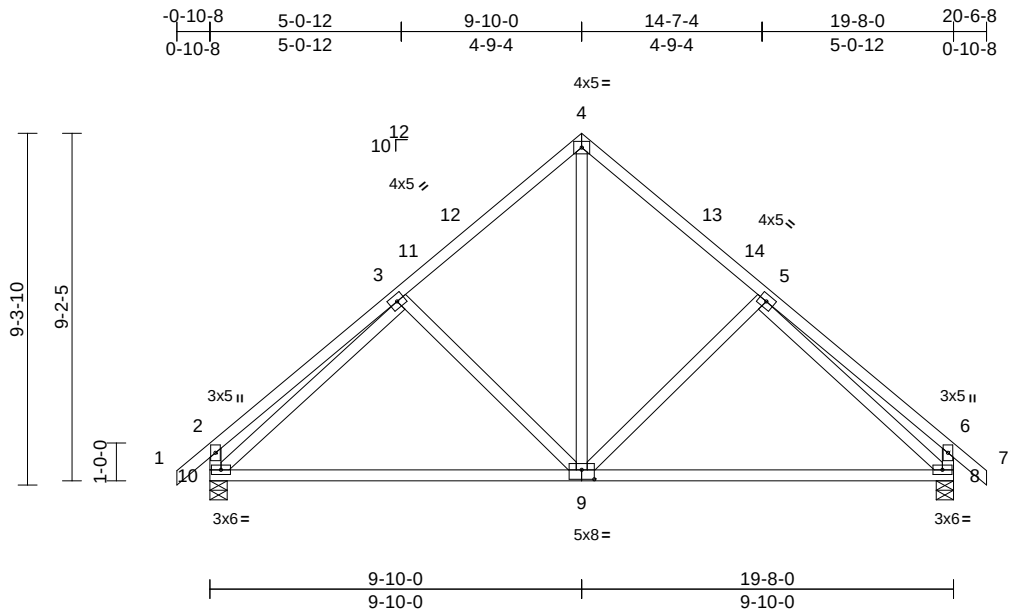

Scale = 1:60.9

Plate Offsets (X, Y): [9:0-4-0,0-3-0]

Loading	(psf)	Spacing	2-0-0	CSI		DEFL	in	(loc)	l/defl	L/d	PLATES	GRIP
TCLL (roof)	20.0	Plate Grip DOL	1.15	TC	0.50	Vert(LL)	-0.17	8-9	>999	240	MT20	244/190
Snow (Pf)	20.0	Lumber DOL	1.15	BC	0.90	Vert(CT)	-0.35	8-9	>669	180		
TCDL	10.0	Rep Stress Incr	YES	WB	0.59	Horz(CT)	0.02	8	n/a	n/a		
BCLL	0.0*	Code	IRC2021/TPI2014	Matrix-MSH								
BCDL	10.0										Weight: 124 lb	FT = 20%

LUMBER
TOP CHORD 2x4 SP No.2
BOT CHORD 2x4 SP No.2
WEBS 2x4 SP No.3

BRACING
TOP CHORD Structural wood sheathing directly applied or 6-0-0 oc purlins, except end verticals.
BOT CHORD Rigid ceiling directly applied or 10-0-0 oc bracing.

REACTIONS (size) 8=0-5-8, 10=0-5-8
Max Horiz 10=-236 (LC 12)
Max Uplift 8=-73 (LC 15), 10=-73 (LC 14)
Max Grav 8=884 (LC 22), 10=884 (LC 21)

FORCES (lb) - Maximum Compression/Maximum Tension
TOP CHORD 1-2=0/39, 2-3=-415/131, 3-4=-757/159, 4-5=-757/159, 5-6=-395/131, 6-7=0/39, 2-10=-407/144, 6-8=-394/144
BOT CHORD 8-10=-100/652
WEBS 4-9=-82/568, 5-9=-259/212, 3-9=-259/212, 3-10=-666/53, 5-8=-666/53

NOTES
1) Unbalanced roof live loads have been considered for this design.
2) Wind: ASCE 7-16; Vult=130mph (3-second gust) Vasd=103mph; TCDL=6.0psf; BCDL=6.0psf; h=25ft; Cat. II; Exp B; Enclosed; MWFRS (envelope) exterior zone and C-C Exterior(2E) -0-10-8 to 2-1-8, Interior (1) 2-1-8 to 6-10-0, Exterior(2R) 6-10-0 to 12-10-0, Interior (1) 12-10-0 to 17-6-8, Exterior(2E) 17-6-8 to 20-6-8 zone; end vertical left and right exposed;C-C for members and forces & MWFRS for reactions shown; Lumber DOL=1.60 plate grip DOL=1.60
3) TCLL: ASCE 7-16; Pr=20.0 psf (roof LL: Lum DOL=1.15 Plate DOL=1.15); Pf=20.0 psf (Lum DOL=1.15 Plate DOL=1.15); Is=1.0; Rough Cat B; Fully Exp.; Ce=0.9; Cs=1.00; Ct=1.10
4) Unbalanced snow loads have been considered for this design.
5) This truss has been designed for greater of min roof live load of 12.0 psf or 1.00 times flat roof load of 20.0 psf on overhangs non-concurrent with other live loads.
6) This truss has been designed for a 10.0 psf bottom chord live load nonconcurrent with any other live loads.
7) * This truss has been designed for a live load of 20.0psf on the bottom chord in all areas where a rectangle 3-06-00 tall by 2-00-00 wide will fit between the bottom chord and any other members.
8) One H2.5A Simpson Strong-Tie connectors recommended to connect truss to bearing walls due to UPLIFT at jt(s) 10 and 8. This connection is for uplift only and does not consider lateral forces.

LOAD CASE(S) Standard

March 26,2025

WARNING - Verify design parameters and READ NOTES ON THIS AND INCLUDED MITEK REFERENCE PAGE MII-7473 rev. 1/2/2023 BEFORE USE.
Design valid for use only with MiTek® connectors. This design is based only upon parameters shown, and is for an individual building component, not a truss system. Before use, the building designer must verify the applicability of design parameters and properly incorporate this design into the overall building design. Bracing indicated is to prevent buckling of individual truss web and/or chord members only. Additional temporary and permanent bracing is always required for stability and to prevent collapse with possible personal injury and property damage. For general guidance regarding the fabrication, storage, delivery, erection and bracing of trusses and truss systems, see **ANSI/TPI1 Quality Criteria and DSB-22** available from Truss Plate Institute (www.tpinst.org) and **BCSI Building Component Safety Information** available from the Structural Building Component Association (www.sbcacomponents.com)

ENGINEERING BY TRENCO A MiTek Affiliate
818 Soundside Road
Edenton, NC 27932

Job	Truss	Truss Type	Qty	Ply	1004 Serenity-Roof-328 A CP GLH
25030123-01	E01	Common Supported Gable	1	1	I72264661 Job Reference (optional)

Carter Components (Sanford, NC), Sanford, NC - 27332,

Run: 8.73 S Feb 19 2025 Print: 8.730 S Feb 19 2025 MiTek Industries, Inc. Tue Mar 25 09:15:25 Page: 1
ID:x0ypEL3Up0yR9Rp3VsFHJqyzBIA-RfC?PsB70Hq3NSgPqnL8w3uITXbGKWrCDoi7J4zJC?f

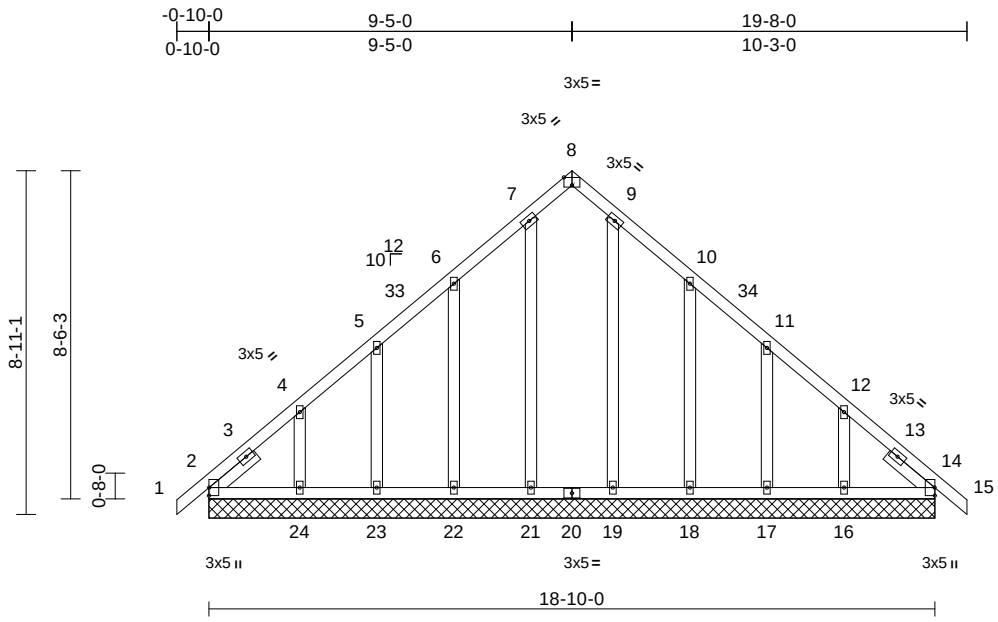

Scale = 1:59.8

Plate Offsets (X, Y): [8:0-2-8,Edge]

Loading	(psf)	Spacing	2-0-0	CSI		DEFL	in	(loc)	l/defl	L/d	PLATES	GRIP
TCLL (roof)	20.0	Plate Grip DOL	1.15	TC	0.07	Vert(LL)	n/a	-	n/a	999	MT20	244/190
Snow (Pf)	20.0	Lumber DOL	1.15	BC	0.09	Vert(CT)	n/a	-	n/a	999		
TCDL	10.0	Rep Stress Incr	YES	WB	0.18	Horz(CT)	0.01	14	n/a	n/a		
BCLL	0.0*	Code	IRC2021/TPI2014	Matrix-MSH								
BCDL	10.0										Weight: 127 lb	FT = 20%

LUMBER

TOP CHORD 2x4 SP No.2
BOT CHORD 2x4 SP No.2
OTHERS 2x4 SP No.3
SLIDER Left 2x4 SP No.3 -- 1-6-0, Right 2x4 SP No.3 -- 1-6-0

BRACING

TOP CHORD Structural wood sheathing directly applied or 6-0-0 oc purlins.
BOT CHORD Rigid ceiling directly applied or 10-0-0 oc bracing.

REACTIONS (size) 2=18-10-0, 14=18-10-0, 16=18-10-0, 17=18-10-0, 18=18-10-0, 19=18-10-0, 21=18-10-0, 22=18-10-0, 23=18-10-0, 24=18-10-0
Max Horiz 2=201 (LC 13)
Max Uplift 2=-22 (LC 10), 14=-1 (LC 11), 16=-138 (LC 15), 17=-55 (LC 15), 18=-101 (LC 15), 21=-3 (LC 11), 22=-97 (LC 14), 23=-55 (LC 14), 24=-141 (LC 14)
Max Grav 2=206 (LC 27), 14=195 (LC 28), 16=216 (LC 26), 17=163 (LC 22), 18=252 (LC 22), 19=217 (LC 22), 21=217 (LC 21), 22=252 (LC 21), 23=163 (LC 21), 24=219 (LC 25)

FORCES (lb) - Maximum Compression/Maximum Tension

TOP CHORD 1-2=0/32, 2-4=-252/136, 4-5=-154/92, 5-6=-111/67, 6-7=-110/77, 7-8=-89/67, 8-9=-89/66, 9-10=-110/56, 10-11=-92/40, 11-12=-136/64, 12-14=-232/116, 14-15=0/32
BOT CHORD 2-24=-84/227, 23-24=-84/227, 22-23=-84/227, 21-22=-84/227, 19-21=-84/226, 18-19=-84/226, 17-18=-84/226, 16-17=-84/226, 14-16=-84/226
WEBS 7-21=-175/29, 9-19=-175/12, 6-22=-211/118, 5-23=-142/88, 4-24=-175/136, 10-18=-211/122, 11-17=-142/88, 12-16=-175/134

NOTES

1) Unbalanced roof live loads have been considered for this design.
2) Wind: ASCE 7-16; Vult=130mph (3-second gust) Vasd=103mph; TCDL=6.0psf; BCDL=6.0psf; h=25ft; Cat. II; Exp B; Enclosed; MWFRS (envelope) exterior zone and C-C Exterior(2E) -0-10-0 to 2-4-4, Interior (1) 2-4-4 to 6-4-4, Exterior(2R) 6-4-4 to 12-5-12, Interior (1) 12-5-12 to 16-5-12, Exterior(2E) 16-5-12 to 19-8-0 zone; end vertical left and right exposed;C-C for members and forces & MWFRS for reactions shown; Lumber DOL=1.60 plate grip DOL=1.60
3) Truss designed for wind loads in the plane of the truss only. For studs exposed to wind (normal to the face), see Standard Industry Gable End Details as applicable, or consult qualified building designer as per ANSI/TPI 1.
4) TCLL: ASCE 7-16; Pr=20.0 psf (roof LL: Lum DOL=1.15 Plate DOL=1.15); Pf=20.0 psf (Lum DOL=1.15 Plate DOL=1.15); Is=1.0; Rough Cat B; Fully Exp.; Ce=0.9; Cs=1.00; Ct=1.10
5) Unbalanced snow loads have been considered for this design.
6) This truss has been designed for greater of min roof live load of 12.0 psf or 1.00 times flat roof load of 20.0 psf on overhangs non-concurrent with other live loads.
7) All plates are 2x4 MT20 unless otherwise indicated.
8) Gable requires continuous bottom chord bearing.
9) Gable studs spaced at 2-0-0 oc.
10) This truss has been designed for a 10.0 psf bottom chord live load nonconcurrent with any other live loads.
11) * This truss has been designed for a live load of 20.0psf on the bottom chord in all areas where a rectangle 3-06-00 tall by 2-00-00 wide will fit between the bottom chord and any other members.
12) Provide mechanical connection (by others) of truss to bearing plate capable of withstanding 22 lb uplift at joint 2, 1 lb uplift at joint 14, 3 lb uplift at joint 21, 97 lb uplift at joint 22, 55 lb uplift at joint 23, 141 lb uplift at joint 24, 101 lb uplift at joint 18, 55 lb uplift at joint 17, 138 lb uplift at joint 16, 22 lb uplift at joint 2 and 1 lb uplift at joint 14.

LOAD CASE(S) Standard

March 26,2025

WARNING - Verify design parameters and READ NOTES ON THIS AND INCLUDED MITEK REFERENCE PAGE MII-7473 rev. 1/2/2023 BEFORE USE.
Design valid for use only with MiTek® connectors. This design is based only upon parameters shown, and is for an individual building component, not a truss system. Before use, the building designer must verify the applicability of design parameters and properly incorporate this design into the overall building design. Bracing indicated is to prevent buckling of individual truss web and/or chord members only. Additional temporary and permanent bracing is always required for stability and to prevent collapse with possible personal injury and property damage. For general guidance regarding the fabrication, storage, delivery, erection and bracing of trusses and truss systems, see **ANSI/TPI1 Quality Criteria and DSB-22** available from Truss Plate Institute (www.tpinst.org) and **BCSI Building Component Safety Information** available from the Structural Building Component Association (www.sbcacomponents.com)

ENGINEERING BY TRENCO A MiTek Affiliate
818 Soundside Road
Edenton, NC 27932

Job	Truss	Truss Type	Qty	Ply	1004 Serenity-Roof-328 A CP GLH
25030123-01	E02	Common Girder	1	**2**	I72264662 Job Reference (optional)

Carter Components (Sanford, NC), Sanford, NC - 27332,

Run: 8.73 S Feb 19 2025 Print: 8.730 S Feb 19 2025 MiTek Industries, Inc. Tue Mar 25 09:15:26 Page: 1
ID:xqX4xngTohNCmGDs_3fFtayzBHN-RfC?PsB70Hq3NSgPqnL8w3uITXbGKWrCDoi7J4zJC?f

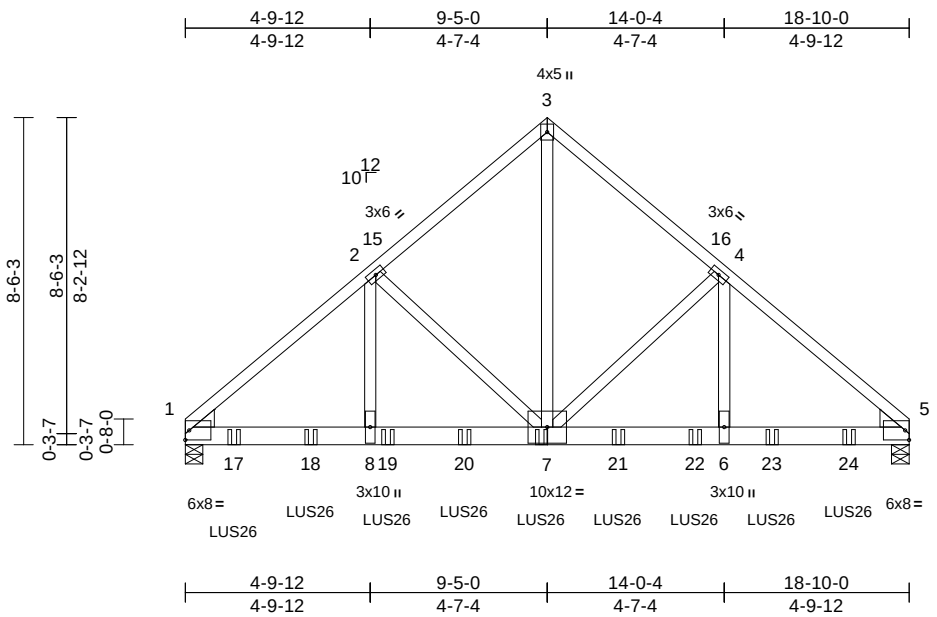

Scale = 1:59.9

Loading	(psf)	Spacing	2-0-0	CSI		DEFL	in	(loc)	l/defl	L/d	PLATES	GRIP
TCLL (roof)	20.0	Plate Grip DOL	1.15	TC	0.43	Vert(LL)	-0.08	6-7	>999	240	MT20	244/190
Snow (Pf)	20.0	Lumber DOL	1.15	BC	0.78	Vert(CT)	-0.14	6-7	>999	180		
TCDL	10.0	Rep Stress Incr	NO	WB	0.95	Horz(CT)	0.04	5	n/a	n/a		
BCLL	0.0*	Code	IRC2021/TPI2014	Matrix-MSH								
BCDL	10.0										Weight: 249 lb	FT = 20%

LUMBER
TOP CHORD 2x4 SP No.2
BOT CHORD 2x6 SP No.2
WEBS 2x4 SP No.3
WEDGE Left: 2x6 SP No.2
Right: 2x6 SP No.2

BRACING
TOP CHORD Structural wood sheathing directly applied or 5-2-6 oc purlins.
BOT CHORD Rigid ceiling directly applied or 10-0-0 oc bracing.

REACTIONS (size) 1=0-5-8, 5=0-5-8
Max Horiz 1=-184 (LC 10)
Max Uplift 1=-231 (LC 12), 5=-227 (LC 13)
Max Grav 1=4700 (LC 5), 5=4592 (LC 6)

FORCES (lb) - Maximum Compression/Maximum Tension
TOP CHORD 1-2=-5590/301, 2-3=-3907/297, 3-4=-3906/297, 4-5=-5608/301
BOT CHORD 1-8=-266/4312, 6-8=-266/4312, 5-6=-175/4253
WEBS 3-7=-271/4600, 4-7=-1844/240, 4-6=-54/2076, 2-7=-1827/238, 2-8=-52/2049

NOTES
1) 2-ply truss to be connected together with 10d (0.131"x3") nails as follows:
Top chords connected as follows: 2x4 - 1 row at 0-9-0 oc.
Bottom chords connected as follows: 2x6 - 2 rows staggered at 0-9-0 oc.
Web connected as follows: 2x4 - 1 row at 0-9-0 oc.
2) All loads are considered equally applied to all plies, except if noted as front (F) or back (B) face in the LOAD CASE(S) section. Ply to ply connections have been provided to distribute only loads noted as (F) or (B), unless otherwise indicated.
3) Unbalanced roof live loads have been considered for this design.
4) Wind: ASCE 7-16; Vult=130mph (3-second gust) Vasd=103mph; TCDL=6.0psf; BCDL=6.0psf; h=25ft; Cat. II; Exp B; Enclosed; MWFRS (envelope) exterior zone; Lumber DOL=1.60 plate grip DOL=1.60
5) TCLL: ASCE 7-16; Pr=20.0 psf (roof LL: Lum DOL=1.15 Plate DOL=1.15); Pf=20.0 psf (Lum DOL=1.15 Plate DOL=1.15); Is=1.0; Rough Cat B; Fully Exp.; Ce=0.9; Cs=1.00; Ct=1.10
6) Unbalanced snow loads have been considered for this design.
7) This truss has been designed for a 10.0 psf bottom chord live load nonconcurrent with any other live loads.
8) * This truss has been designed for a live load of 20.0psf on the bottom chord in all areas where a rectangle 3-06-00 tall by 2-00-00 wide will fit between the bottom chord and any other members.
9) One H2.5A Simpson Strong-Tie connectors recommended to connect truss to bearing walls due to UPLIFT at jt(s) 1 and 5. This connection is for uplift only and does not consider lateral forces.
10) Use Simpson Strong-Tie LUS26 (4-10d Girder, 3-10d Truss) or equivalent spaced at 2-0-0 oc max. starting at 1-3-4 from the left end to 17-3-4 to connect truss(es) to back face of bottom chord.
11) Fill all nail holes where hanger is in contact with lumber.

LOAD CASE(S) Standard
1) Dead + Snow (balanced): Lumber Increase=1.15, Plate Increase=1.15
Uniform Loads (lb/ft)
Vert: 1-3=-60, 3-5=-60, 9-12=-20
Concentrated Loads (lb)
Vert: 7=-813 (B), 17=-813 (B), 18=-813 (B), 19=-813 (B), 20=-813 (B), 21=-813 (B), 22=-813 (B), 23=-813 (B), 24=-813 (B)

March 26,2025

WARNING - Verify design parameters and READ NOTES ON THIS AND INCLUDED MITEK REFERENCE PAGE MII-7473 rev. 1/2/2023 BEFORE USE.
Design valid for use only with MiTek® connectors. This design is based only upon parameters shown, and is for an individual building component, not a truss system. Before use, the building designer must verify the applicability of design parameters and properly incorporate this design into the overall building design. Bracing indicated is to prevent buckling of individual truss web and/or chord members only. Additional temporary and permanent bracing is always required for stability and to prevent collapse with possible personal injury and property damage. For general guidance regarding the fabrication, storage, delivery, erection and bracing of trusses and truss systems, see **ANSI/TPI1 Quality Criteria and DSB-22** available from Truss Plate Institute (www.tpinst.org) and **BCSI Building Component Safety Information** available from the Structural Building Component Association (www.sbcacomponents.com)

ENGINEERING BY TRENCO A MiTek Affiliate
818 Soundside Road
Edenton, NC 27932

Job	Truss	Truss Type	Qty	Ply	1004 Serenity-Roof-328 A CP GLH
25030123-01	EJ4	Jack-Open	9	1	I72264663 Job Reference (optional)

Carter Components (Sanford, NC), Sanford, NC - 27332, Run: 8.73 S Feb 19 2025 Print: 8.730 S Feb 19 2025 MiTek Industries, Inc. Tue Mar 25 09:15:26 Page: 1
ID:crXu80texbJNcE7reHwwFyyzBEX-RfC?PsB70Hq3NSgPqnL8w3uITXbGKWrCDoi7J4zJC?f

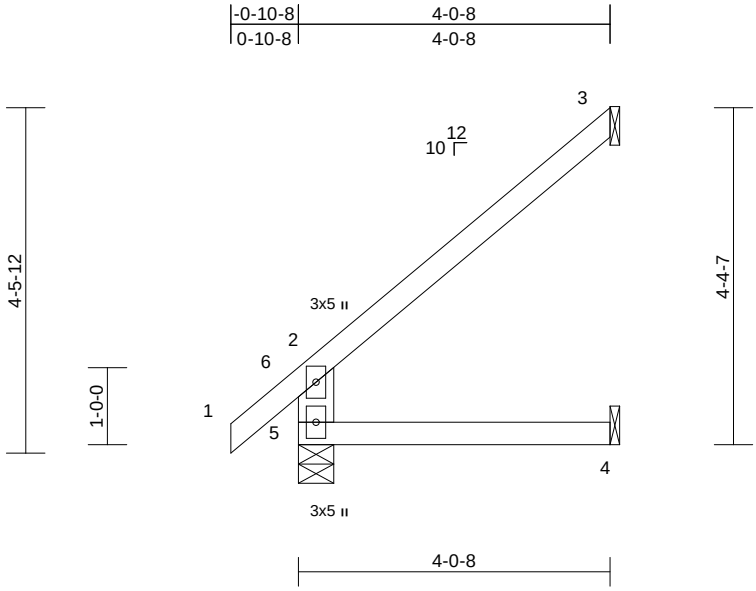

Scale = 1:29.9

Loading	(psf)	Spacing	2-0-0	CSI		DEFL	in	(loc)	l/defl	L/d	PLATES	GRIP
TCLL (roof)	20.0	Plate Grip DOL	1.15	TC	0.36	Vert(LL)	0.02	4-5	>999	240	MT20	244/190
Snow (Pf)	20.0	Lumber DOL	1.15	BC	0.32	Vert(CT)	-0.02	4-5	>999	180		
TCDL	10.0	Rep Stress Incr	YES	WB	0.00	Horz(CT)	-0.03	3	n/a	n/a		
BCLL	0.0*	Code	IRC2021/TPI2014	Matrix-MR								
BCDL	10.0										Weight: 18 lb	FT = 20%

LUMBER
TOP CHORD 2x4 SP No.2
BOT CHORD 2x4 SP No.2
WEBS 2x6 SP No.2

BRACING
TOP CHORD Structural wood sheathing directly applied or 4-0-8 oc purlins, except end verticals.
BOT CHORD Rigid ceiling directly applied or 10-0-0 oc bracing.

REACTIONS (size) 3= Mechanical, 4= Mechanical, 5=0-5-8
Max Horiz 5=133 (LC 14)
Max Uplift 3=-90 (LC 14), 4=-6 (LC 14)
Max Grav 3=171 (LC 21), 4=71 (LC 7), 5=328 (LC 21)

FORCES (lb) - Maximum Compression/Maximum Tension
TOP CHORD 2-5=-307/92, 1-2=0/53, 2-3=-144/84
BOT CHORD 4-5=0/0

NOTES
1) Wind: ASCE 7-16; Vult=130mph (3-second gust) Vasd=103mph; TCDL=6.0psf; BCDL=6.0psf; h=25ft; Cat. II; Exp B; Enclosed; MWFRS (envelope) exterior zone and C-C Exterior(2E) zone; cantilever left and right exposed ; end vertical left and right exposed;C-C for members and forces & MWFRS for reactions shown; Lumber DOL=1.60 plate grip DOL=1.60
2) TCLL: ASCE 7-16; Pr=20.0 psf (roof LL: Lum DOL=1.15 Plate DOL=1.15); Pf=20.0 psf (Lum DOL=1.15 Plate DOL=1.15); Is=1.0; Rough Cat B; Fully Exp.; Ce=0.9; Cs=1.00; Ct=1.10
3) Unbalanced snow loads have been considered for this design.
4) This truss has been designed for greater of min roof live load of 12.0 psf or 1.00 times flat roof load of 20.0 psf on overhangs non-concurrent with other live loads.
5) This truss has been designed for a 10.0 psf bottom chord live load nonconcurrent with any other live loads.
6) * This truss has been designed for a live load of 20.0psf on the bottom chord in all areas where a rectangle 3-06-00 tall by 2-00-00 wide will fit between the bottom chord and any other members.
7) Bearings are assumed to be: , Joint 5 User Defined .
8) Refer to girder(s) for truss to truss connections.
9) Provide mechanical connection (by others) of truss to bearing plate capable of withstanding 90 lb uplift at joint 3 and 6 lb uplift at joint 4.

LOAD CASE(S) Standard

March 26,2025

WARNING - Verify design parameters and READ NOTES ON THIS AND INCLUDED MITEK REFERENCE PAGE MII-7473 rev. 1/2/2023 BEFORE USE.
Design valid for use only with MiTek® connectors. This design is based only upon parameters shown, and is for an individual building component, not a truss system. Before use, the building designer must verify the applicability of design parameters and properly incorporate this design into the overall building design. Bracing indicated is to prevent buckling of individual truss web and/or chord members only. Additional temporary and permanent bracing is always required for stability and to prevent collapse with possible personal injury and property damage. For general guidance regarding the fabrication, storage, delivery, erection and bracing of trusses and truss systems, see **ANSI/TPI1 Quality Criteria and DSB-22** available from Truss Plate Institute (www.tpinst.org) and **BCSI Building Component Safety Information** available from the Structural Building Component Association (www.sbcacomponents.com)

ENGINEERING BY TRENCO A MiTek Affiliate
818 Soundside Road
Edenton, NC 27932

Job	Truss	Truss Type	Qty	Ply	1004 Serenity-Roof-328 A CP GLH
25030123-01	EJ34	Jack-Open	2	1	I72264664 Job Reference (optional)

Carter Components (Sanford, NC), Sanford, NC - 27332,

Run: 8.73 S Feb 19 2025 Print: 8.730 S Feb 19 2025 MiTek Industries, Inc. Tue Mar 25 09:15:26 Page: 1
ID:wY4gRT_LHtvJeN9W1caV_MyzBD5-RfC?PsB70Hq3NSgPqnL8w3uITXbGKWrCDoi7J4zJC?f

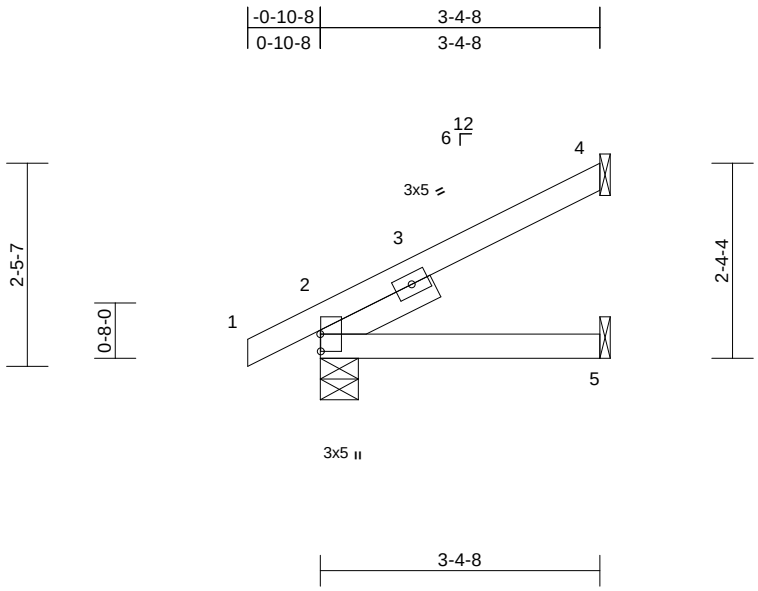

Scale = 1:27.8

Plate Offsets (X, Y): [2:0-2-8,0-0-1]

Loading	(psf)	Spacing	2-0-0	CSI		DEFL	in	(loc)	l/defl	L/d	PLATES	GRIP
TCLL (roof)	20.0	Plate Grip DOL	1.15	TC	0.20	Vert(LL)	-0.01	5-8	>999	240	MT20	244/190
Snow (Pf)	20.0	Lumber DOL	1.15	BC	0.16	Vert(CT)	-0.02	5-8	>999	180		
TCDL	10.0	Rep Stress Incr	YES	WB	0.00	Horz(CT)	0.01	2	n/a	n/a		
BCLL	0.0*	Code	IRC2021/TPI2014	Matrix-MP								
BCDL	10.0										Weight: 15 lb	FT = 20%

LUMBER
TOP CHORD 2x4 SP No.2
BOT CHORD 2x4 SP No.2
SLIDER Left 2x4 SP No.3 -- 1-6-0

BRACING
TOP CHORD Structural wood sheathing directly applied or 3-4-8 oc purlins.
BOT CHORD Rigid ceiling directly applied or 10-0-0 oc bracing.

REACTIONS (size) 2=0-5-8, 4= Mechanical, 5= Mechanical
Max Horiz 2=74 (LC 14)
Max Uplift 2=-18 (LC 14), 4=-45 (LC 14)
Max Grav 2=279 (LC 21), 4=126 (LC 21), 5=59 (LC 7)

FORCES (lb) - Maximum Compression/Maximum Tension
TOP CHORD 1-2=0/36, 2-4=-98/45
BOT CHORD 2-5=-113/88

NOTES
1) Wind: ASCE 7-16; Vult=130mph (3-second gust) Vasd=103mph; TCDL=6.0psf; BCDL=6.0psf; h=25ft; Cat. II; Exp B; Enclosed; MWFRS (envelope) exterior zone and C-C Exterior(2E) zone; cantilever left and right exposed ; end vertical left and right exposed;C-C for members and forces & MWFRS for reactions shown; Lumber DOL=1.60 plate grip DOL=1.60
2) TCLL: ASCE 7-16; Pr=20.0 psf (roof LL: Lum DOL=1.15 Plate DOL=1.15); Pf=20.0 psf (Lum DOL=1.15 Plate DOL=1.15); Is=1.0; Rough Cat B; Fully Exp.; Ce=0.9; Cs=1.00; Ct=1.10
3) Unbalanced snow loads have been considered for this design.
4) This truss has been designed for greater of min roof live load of 12.0 psf or 1.00 times flat roof load of 20.0 psf on overhangs non-concurrent with other live loads.
5) This truss has been designed for a 10.0 psf bottom chord live load nonconcurrent with any other live loads.
6) * This truss has been designed for a live load of 20.0psf on the bottom chord in all areas where a rectangle 3-06-00 tall by 2-00-00 wide will fit between the bottom chord and any other members.
7) Bearings are assumed to be: , Joint 2 User Defined .
8) Refer to girder(s) for truss to truss connections.
9) Provide mechanical connection (by others) of truss to bearing plate capable of withstanding 45 lb uplift at joint 4.
10) One H2.5A Simpson Strong-Tie connectors recommended to connect truss to bearing walls due to UPLIFT at jt(s) 2. This connection is for uplift only and does not consider lateral forces.

LOAD CASE(S) Standard

March 26,2025

WARNING - Verify design parameters and READ NOTES ON THIS AND INCLUDED MITEK REFERENCE PAGE MII-7473 rev. 1/2/2023 BEFORE USE.
Design valid for use only with MiTek® connectors. This design is based only upon parameters shown, and is for an individual building component, not a truss system. Before use, the building designer must verify the applicability of design parameters and properly incorporate this design into the overall building design. Bracing indicated is to prevent buckling of individual truss web and/or chord members only. Additional temporary and permanent bracing is always required for stability and to prevent collapse with possible personal injury and property damage. For general guidance regarding the fabrication, storage, delivery, erection and bracing of trusses and truss systems, see **ANSI/TPI1 Quality Criteria and DSB-22** available from Truss Plate Institute (www.tpinst.org) and **BCSI Building Component Safety Information** available from the Structural Building Component Association (www.sbcacomponents.com)

ENGINEERING BY TRENCO A MiTek Affiliate
818 Soundside Road
Edenton, NC 27932

Job	Truss	Truss Type	Qty	Ply	1004 Serenity-Roof-328 A CP GLH
25030123-01	F01	Common Supported Gable	1	1	I72264665 Job Reference (optional)

Carter Components (Sanford, NC), Sanford, NC - 27332,

Run: 8.73 S Feb 19 2025 Print: 8.730 S Feb 19 2025 MiTek Industries, Inc. Tue Mar 25 09:15:26 Page: 1
ID:bIbw4E4_5X0UgfFVg5xqNryzBV3-RfC?PsB70Hq3NSgPqnL8w3uITXbGKWrCDoi7J4zJC?f

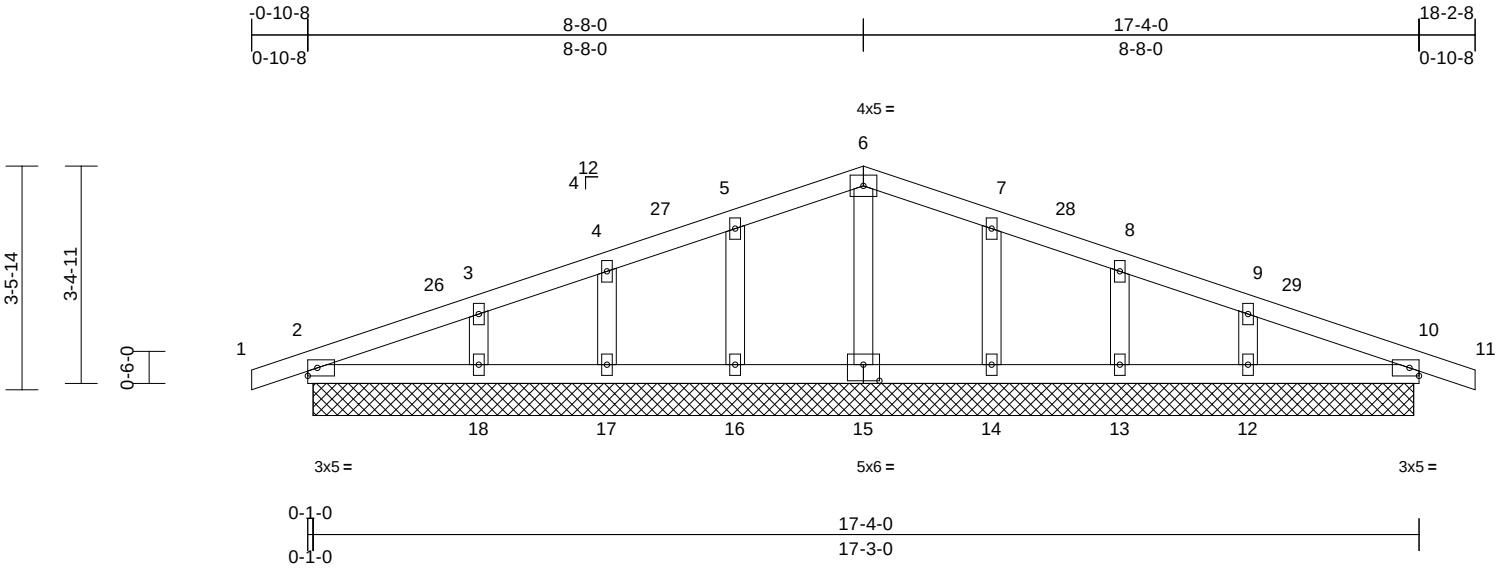

Scale = 1:35.9

Plate Offsets (X, Y): [15:0-3-0,0-3-0]

Loading	(psf)	Spacing	2-0-0	CSI		DEFL	in	(loc)	l/defl	L/d	PLATES	GRIP
TCLL (roof)	20.0	Plate Grip DOL	1.15	TC	0.08	Vert(LL)	n/a	-	n/a	999	MT20	244/190
Snow (Pf)	20.0	Lumber DOL	1.15	BC	0.05	Vert(CT)	n/a	-	n/a	999		
TCDL	10.0	Rep Stress Incr	YES	WB	0.04	Horz(CT)	0.00	10	n/a	n/a		
BCLL	0.0*	Code	IRC2021/TPI2014	Matrix-MSH								
BCDL	10.0										Weight: 74 lb	FT = 20%

LUMBER

TOP CHORD 2x4 SP No.2
BOT CHORD 2x4 SP No.2
OTHERS 2x4 SP No.3

BRACING

TOP CHORD Structural wood sheathing directly applied or 6-0-0 oc purlins.
BOT CHORD Rigid ceiling directly applied or 10-0-0 oc bracing.

REACTIONS (size) 2=17-2-0, 10=17-2-0, 12=17-2-0, 13=17-2-0, 14=17-2-0, 15=17-2-0, 16=17-2-0, 17=17-2-0, 18=17-2-0
Max Horiz 2=-50 (LC 19)
Max Uplift 2=-38 (LC 10), 10=-45 (LC 11), 12=-46 (LC 15), 13=-31 (LC 11), 14=-38 (LC 15), 16=-38 (LC 14), 17=-30 (LC 10), 18=-49 (LC 14)
Max Grav 2=160 (LC 1), 10=160 (LC 1), 12=249 (LC 22), 13=203 (LC 22), 14=235 (LC 22), 15=135 (LC 22), 16=235 (LC 21), 17=203 (LC 21), 18=249 (LC 21)

FORCES (lb) - Maximum Compression/Maximum Tension
TOP CHORD 1-2=0/17, 2-3=-60/34, 3-4=-51/47, 4-5=-54/78, 5-6=-64/121, 6-7=-64/121, 7-8=-54/78, 8-9=-51/43, 9-10=-48/34, 10-11=0/17
BOT CHORD 2-18=-22/45, 17-18=0/45, 16-17=0/45, 14-16=0/45, 13-14=0/45, 12-13=0/45, 10-12=-18/45
WEBS 6-15=-96/12, 5-16=-193/109, 4-17=-170/86, 3-18=-190/104, 7-14=-193/109, 8-13=-170/86, 9-12=-190/104

NOTES

1) Unbalanced roof live loads have been considered for this design.
2) Wind: ASCE 7-16; Vult=130mph (3-second gust) Vasd=103mph; TCDL=6.0psf; BCDL=6.0psf; h=25ft; Cat. II; Exp B; Enclosed; MWFRS (envelope) exterior zone and C-C Corner(3E) -0-10-8 to 2-1-8, Exterior(2N) 2-1-8 to 5-8-0, Corner(3R) 5-8-0 to 11-8-0, Exterior(2N) 11-8-0 to 15-2-8, Corner(3E) 15-2-8 to 18-2-8 zone; cantilever left and right exposed ; end vertical left and right exposed;C-C for members and forces & MWFRS for reactions shown; Lumber DOL=1.60 plate grip DOL=1.60
3) Truss designed for wind loads in the plane of the truss only. For studs exposed to wind (normal to the face), see Standard Industry Gable End Details as applicable, or consult qualified building designer as per ANSI/TPI 1.
4) TCLL: ASCE 7-16; Pr=20.0 psf (roof LL: Lum DOL=1.15 Plate DOL=1.15); Pf=20.0 psf (Lum DOL=1.15 Plate DOL=1.15); Is=1.0; Rough Cat B; Fully Exp.; Ce=0.9; Cs=1.00; Ct=1.10
5) Unbalanced snow loads have been considered for this design.
6) This truss has been designed for greater of min roof live load of 12.0 psf or 1.00 times flat roof load of 20.0 psf on overhangs non-concurrent with other live loads.
7) All plates are 2x4 MT20 unless otherwise indicated.
8) Gable studs spaced at 2-0-0 oc.
9) This truss has been designed for a 10.0 psf bottom chord live load nonconcurrent with any other live loads.
10) * This truss has been designed for a live load of 20.0psf on the bottom chord in all areas where a rectangle 3-06-00 tall by 2-00-00 wide will fit between the bottom chord and any other members.

LOAD CASE(S) Standard

March 26,2025

WARNING - Verify design parameters and READ NOTES ON THIS AND INCLUDED MITEK REFERENCE PAGE MII-7473 rev. 1/2/2023 BEFORE USE.
Design valid for use only with MiTek® connectors. This design is based only upon parameters shown, and is for an individual building component, not a truss system. Before use, the building designer must verify the applicability of design parameters and properly incorporate this design into the overall building design. Bracing indicated is to prevent buckling of individual truss web and/or chord members only. Additional temporary and permanent bracing is always required for stability and to prevent collapse with possible personal injury and property damage. For general guidance regarding the fabrication, storage, delivery, erection and bracing of trusses and truss systems, see **ANSI/TPI1 Quality Criteria and DSB-22** available from Truss Plate Institute (www.tpinst.org) and **BCSI Building Component Safety Information** available from the Structural Building Component Association (www.sbcacomponents.com)

ENGINEERING BY TRENCO A MiTek Affiliate
818 Soundside Road
Edenton, NC 27932

Job	Truss	Truss Type	Qty	Ply	1004 Serenity-Roof-328 A CP GLH
25030123-01	F02	Common	4	1	I72264666 Job Reference (optional)

Carter Components (Sanford, NC), Sanford, NC - 27332,

Run: 8.73 S Feb 19 2025 Print: 8.730 S Feb 19 2025 MiTek Industries, Inc. Tue Mar 25 09:15:26 Page: 1
ID:qaiA6xbzzlROKF1mhdDvcwyzBUO-RfC?PsB70Hq3NSgPqnL8w3uITXbGKWrCDoi7J4zJC?f

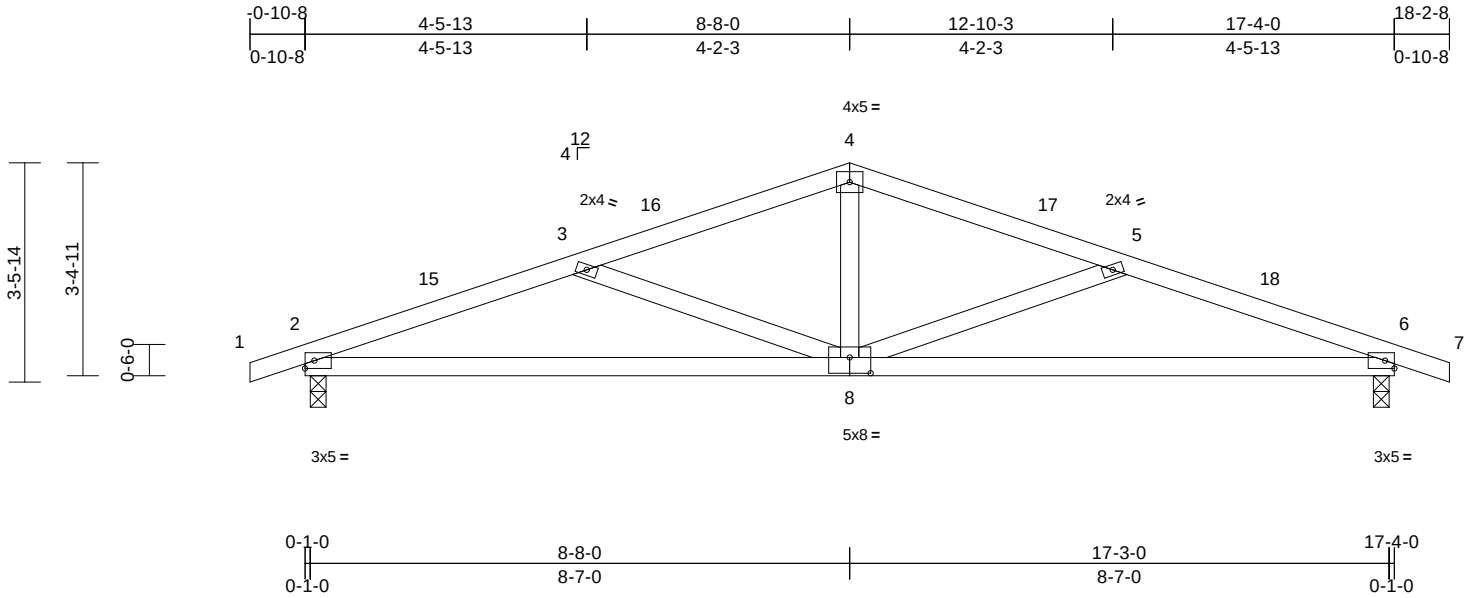

Scale = 1:36.7

Plate Offsets (X, Y): [8:0-4-0,0-3-0]

Loading	(psf)	Spacing	2-0-0	CSI		DEFL	in	(loc)	l/defl	L/d	PLATES	GRIP
TCLL (roof)	20.0	Plate Grip DOL	1.15	TC	0.39	Vert(LL)	0.10	8-11	>999	240	MT20	244/190
Snow (Pf)	20.0	Lumber DOL	1.15	BC	0.70	Vert(CT)	-0.19	8-11	>999	180		
TCDL	10.0	Rep Stress Incr	YES	WB	0.24	Horz(CT)	0.03	6	n/a	n/a		
BCLL	0.0*	Code	IRC2021/TPI2014	Matrix-MSH								
BCDL	10.0										Weight: 73 lb	FT = 20%

LUMBER
TOP CHORD 2x4 SP No.2
BOT CHORD 2x4 SP No.2
WEBS 2x4 SP No.3

BRACING
TOP CHORD Structural wood sheathing directly applied or 4-4-6 oc purlins.
BOT CHORD Rigid ceiling directly applied or 7-0-4 oc bracing.

REACTIONS (size) 2=0-3-0, 6=0-3-0
Max Horiz 2=-50 (LC 19)
Max Uplift 2=-266 (LC 10), 6=-266 (LC 11)
Max Grav 2=816 (LC 21), 6=816 (LC 22)

FORCES (lb) - Maximum Compression/Maximum Tension
TOP CHORD 1-2=0/17, 2-3=-1656/800, 3-4=-1134/656, 4-5=-1134/656, 5-6=-1656/800, 6-7=0/17
BOT CHORD 2-6=-692/1528
WEBS 4-8=-243/461, 5-8=-547/206, 3-8=-547/206

NOTES
1) Unbalanced roof live loads have been considered for this design.
2) Wind: ASCE 7-16; Vult=130mph (3-second gust) Vasd=103mph; TCDL=6.0psf; BCDL=6.0psf; h=25ft; Cat. II; Exp B; Enclosed; MWFRS (envelope) exterior zone and C-C Exterior(2E) -0-10-8 to 2-1-8, Interior (1) 2-1-8 to 5-8-0, Exterior(2R) 5-8-0 to 11-8-0, Interior (1) 11-8-0 to 15-2-8, Exterior(2E) 15-2-8 to 18-2-8 zone; cantilever left and right exposed ; end vertical left and right exposed; porch left and right exposed;C-C for members and forces & MWFRS for reactions shown; Lumber DOL=1.60 plate grip DOL=1.60
3) TCLL: ASCE 7-16; Pr=20.0 psf (roof LL: Lum DOL=1.15 Plate DOL=1.15); Pf=20.0 psf (Lum DOL=1.15 Plate DOL=1.15); Is=1.0; Rough Cat B; Fully Exp.; Ce=0.9; Cs=1.00; Ct=1.10
4) Unbalanced snow loads have been considered for this design.
5) This truss has been designed for greater of min roof live load of 12.0 psf or 1.00 times flat roof load of 20.0 psf on overhangs non-concurrent with other live loads.
6) This truss has been designed for a 10.0 psf bottom chord live load nonconcurrent with any other live loads.
7) * This truss has been designed for a live load of 20.0psf on the bottom chord in all areas where a rectangle 3-06-00 tall by 2-00-00 wide will fit between the bottom chord and any other members.
8) One H2.5A Simpson Strong-Tie connectors recommended to connect truss to bearing walls due to UPLIFT at jt(s) 2 and 6. This connection is for uplift only and does not consider lateral forces.

LOAD CASE(S) Standard

March 26,2025

WARNING - Verify design parameters and READ NOTES ON THIS AND INCLUDED MITEK REFERENCE PAGE MII-7473 rev. 1/2/2023 BEFORE USE.
Design valid for use only with MiTek® connectors. This design is based only upon parameters shown, and is for an individual building component, not a truss system. Before use, the building designer must verify the applicability of design parameters and properly incorporate this design into the overall building design. Bracing indicated is to prevent buckling of individual truss web and/or chord members only. Additional temporary and permanent bracing is always required for stability and to prevent collapse with possible personal injury and property damage. For general guidance regarding the fabrication, storage, delivery, erection and bracing of trusses and truss systems, see **ANSI/TPI1 Quality Criteria and DSB-22** available from Truss Plate Institute (www.tpinst.org) and **BCSI Building Component Safety Information** available from the Structural Building Component Association (www.sbcacomponents.com)

ENGINEERING BY TRENCO A MiTek Affiliate
818 Soundside Road
Edenton, NC 27932

Job	Truss	Truss Type	Qty	Ply	1004 Serenity-Roof-328 A CP GLH
25030123-01	G01	Common Supported Gable	1	1	I72264667 Job Reference (optional)

Carter Components (Sanford, NC), Sanford, NC - 27332,

Run: 8.73 S Feb 19 2025 Print: 8.730 S Feb 19 2025 MiTek Industries, Inc. Tue Mar 25 09:15:26 Page: 1
ID:DP_lNHM2kIcG82JXPRIrjVyzBPX-RfC?PsB70Hq3NSgPqnL8w3uITXbGKWrCDoi7J4zJC?f

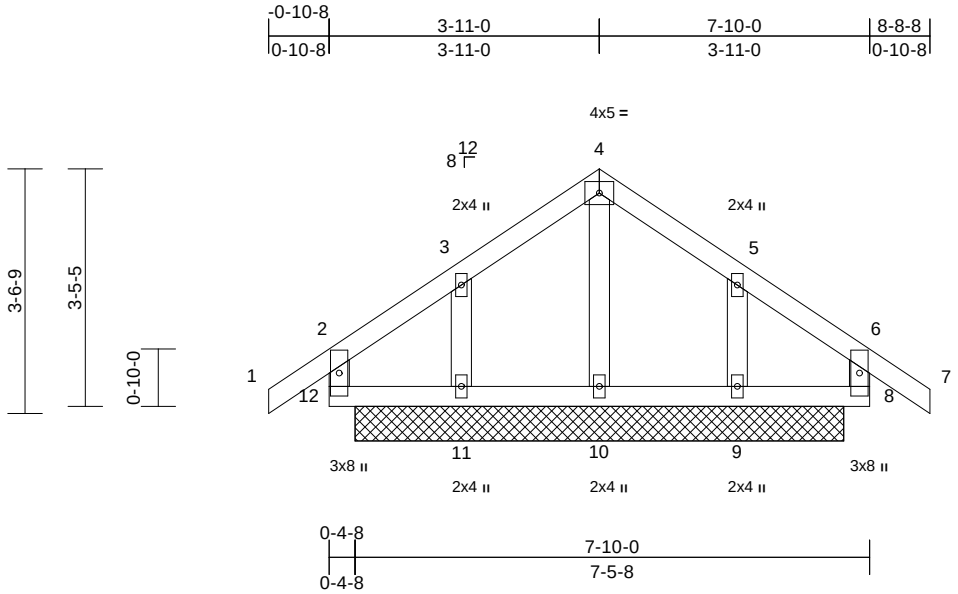

Scale = 1:33.4

Loading	(psf)	Spacing	2-0-0	CSI		DEFL	in	(loc)	l/defl	L/d	PLATES	GRIP
TCLL (roof)	20.0	Plate Grip DOL	1.15	TC	0.28	Vert(LL)	n/a	-	n/a	999	MT20	244/190
Snow (Pf)	20.0	Lumber DOL	1.15	BC	0.23	Vert(CT)	n/a	-	n/a	999		
TCDL	10.0	Rep Stress Incr	YES	WB	0.07	Horz(CT)	0.00	9	n/a	n/a		
BCLL	0.0*	Code	IRC2021/TPI2014	Matrix-MR								
BCDL	10.0										Weight: 39 lb	FT = 20%

LUMBER

TOP CHORD	2x4 SP No.2
BOT CHORD	2x4 SP No.2
WEBS	2x4 SP No.3
OTHERS	2x4 SP No.3

BRACING

TOP CHORD	Structural wood sheathing directly applied or 7-10-0 oc purlins, except end verticals.
BOT CHORD	Rigid ceiling directly applied or 6-0-0 oc bracing.

REACTIONS (size) 9=7-1-0, 10=7-1-0, 11=7-1-0
Max Horiz 11=96 (LC 13)
Max Uplift 9=-83 (LC 15), 11=-82 (LC 14)
Max Grav 9=459 (LC 22), 10=260 (LC 22), 11=459 (LC 21)

FORCES (lb) - Maximum Compression/Maximum Tension

TOP CHORD	2-12=-51/46, 1-2=0/57, 2-3=-113/228, 3-4=-27/172, 4-5=-29/172, 5-6=-113/228, 6-7=0/57, 6-8=-51/46
BOT CHORD	11-12=-129/162, 10-11=-129/205, 9-10=-129/205, 8-9=-129/205
WEBS	4-10=-256/49, 3-11=-301/199, 5-9=-301/197

NOTES

1) Unbalanced roof live loads have been considered for this design.
2) Wind: ASCE 7-16; Vult=130mph (3-second gust) Vasd=103mph; TCDL=6.0psf; BCDL=6.0psf; h=25ft; Cat. II; Exp B; Enclosed; MWFRS (envelope) exterior zone and C-C Corner(3E) -0-10-8 to 1-11-0, Corner(3R) 1-11-0 to 5-11-0, Corner(3E) 5-11-0 to 8-8-8 zone; end vertical left and right exposed;C-C for members and forces & MWFRS for reactions shown; Lumber DOL=1.60 plate grip DOL=1.60
3) Truss designed for wind loads in the plane of the truss only. For studs exposed to wind (normal to the face), see Standard Industry Gable End Details as applicable, or consult qualified building designer as per ANSI/TPI 1.
4) TCLL: ASCE 7-16; Pr=20.0 psf (roof LL: Lum DOL=1.15 Plate DOL=1.15); Pf=20.0 psf (Lum DOL=1.15 Plate DOL=1.15); Is=1.0; Rough Cat B; Fully Exp.; Ce=0.9; Cs=1.00; Ct=1.10
5) Unbalanced snow loads have been considered for this design.
6) This truss has been designed for greater of min roof live load of 12.0 psf or 1.00 times flat roof load of 20.0 psf on overhangs non-concurrent with other live loads.
7) Truss to be fully sheathed from one face or securely braced against lateral movement (i.e. diagonal web).
8) Gable studs spaced at 2-0-0 oc.
9) This truss has been designed for a 10.0 psf bottom chord live load nonconcurrent with any other live loads.
10) * This truss has been designed for a live load of 20.0psf on the bottom chord in all areas where a rectangle 3-06-00 tall by 2-00-00 wide will fit between the bottom chord and any other members.

LOAD CASE(S) Standard

March 26,2025

WARNING - Verify design parameters and READ NOTES ON THIS AND INCLUDED MITEK REFERENCE PAGE MII-7473 rev. 1/2/2023 BEFORE USE.
Design valid for use only with MiTek® connectors. This design is based only upon parameters shown, and is for an individual building component, not a truss system. Before use, the building designer must verify the applicability of design parameters and properly incorporate this design into the overall building design. Bracing indicated is to prevent buckling of individual truss web and/or chord members only. Additional temporary and permanent bracing is always required for stability and to prevent collapse with possible personal injury and property damage. For general guidance regarding the fabrication, storage, delivery, erection and bracing of trusses and truss systems, see **ANSI/TPI1 Quality Criteria and DSB-22** available from Truss Plate Institute (www.tpinst.org) and **BCSI Building Component Safety Information** available from the Structural Building Component Association (www.sbcacomponents.com)

ENGINEERING BY TRENCO A MiTek Affiliate
818 Soundside Road
Edenton, NC 27932

Job	Truss	Truss Type	Qty	Ply	1004 Serenity-Roof-328 A CP GLH
25030123-01	G02	Common	1	1	I72264668 Job Reference (optional)

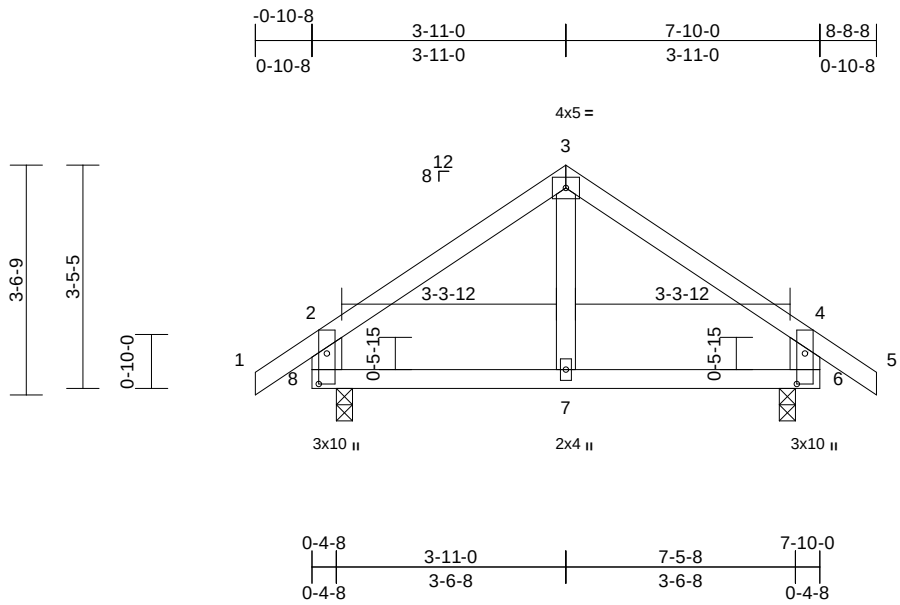

Scale = 1:35.5

Plate Offsets (X, Y): [6:0-5-10,0-1-8], [8:0-5-10,0-1-8]

Loading	(psf)	Spacing	2-0-0	CSI		DEFL	in	(loc)	l/defl	L/d	PLATES	GRIP
TCLL (roof)	20.0	Plate Grip DOL	1.15	TC	0.33	Vert(LL)	0.01	7-8	>999	240	MT20	244/190
Snow (Pf)	20.0	Lumber DOL	1.15	BC	0.15	Vert(CT)	-0.01	7-8	>999	180		
TCDL	10.0	Rep Stress Incr	YES	WB	0.05	Horz(CT)	0.00	6	n/a	n/a		
BCLL	0.0*	Code	IRC2021/TPI2014	Matrix-MR								
BCDL	10.0										Weight: 36 lb	FT = 20%

LUMBER
TOP CHORD 2x4 SP No.2
BOT CHORD 2x4 SP No.2
WEBS 2x6 SP No.2 *Except* 7-3:2x4 SP No.3

BRACING
TOP CHORD Structural wood sheathing directly applied or 6-0-0 oc purlins, except end verticals.
BOT CHORD Rigid ceiling directly applied or 10-0-0 oc bracing.

REACTIONS (size) 6=0-3-0, 8=0-3-0
Max Horiz 8=98 (LC 13)
Max Uplift 6=-45 (LC 15), 8=-45 (LC 14)
Max Grav 6=498 (LC 22), 8=498 (LC 21)

FORCES (lb) - Maximum Compression/Maximum Tension
TOP CHORD 1-2=0/62, 2-3=-344/190, 3-4=-344/188, 4-5=0/62, 2-8=-455/234, 4-6=-455/232
BOT CHORD 7-8=-33/184, 6-7=-33/184
WEBS 3-7=-72/142

NOTES
1) Unbalanced roof live loads have been considered for this design.
2) Wind: ASCE 7-16; Vult=130mph (3-second gust) Vasd=103mph; TCDL=6.0psf; BCDL=6.0psf; h=25ft; Cat. II; Exp B; Enclosed; MWFRS (envelope) exterior zone and C-C Exterior(2E) -0-10-8 to 2-1-8, Exterior(2R) 2-1-8 to 5-8-8, Exterior(2E) 5-8-8 to 8-8-8 zone; end vertical left and right exposed; porch left and right exposed;C-C for members and forces & MWFRS for reactions shown; Lumber DOL=1.60 plate grip DOL=1.60
3) TCLL: ASCE 7-16; Pr=20.0 psf (roof LL: Lum DOL=1.15 Plate DOL=1.15); Pf=20.0 psf (Lum DOL=1.15 Plate DOL=1.15); Is=1.0; Rough Cat B; Fully Exp.; Ce=0.9; Cs=1.00; Ct=1.10
4) Unbalanced snow loads have been considered for this design.
5) This truss has been designed for greater of min roof live load of 12.0 psf or 1.00 times flat roof load of 20.0 psf on overhangs non-concurrent with other live loads.
6) This truss has been designed for a 10.0 psf bottom chord live load nonconcurrent with any other live loads.
7) * This truss has been designed for a live load of 20.0psf on the bottom chord in all areas where a rectangle 3-06-00 tall by 2-00-00 wide will fit between the bottom chord and any other members.
8) Provide mechanical connection (by others) of truss to bearing plate capable of withstanding 45 lb uplift at joint 8 and 45 lb uplift at joint 6.

LOAD CASE(S) Standard

March 26,2025

WARNING - Verify design parameters and READ NOTES ON THIS AND INCLUDED MITEK REFERENCE PAGE MII-7473 rev. 1/2/2023 BEFORE USE.
Design valid for use only with MiTek® connectors. This design is based only upon parameters shown, and is for an individual building component, not a truss system. Before use, the building designer must verify the applicability of design parameters and properly incorporate this design into the overall building design. Bracing indicated is to prevent buckling of individual truss web and/or chord members only. Additional temporary and permanent bracing is always required for stability and to prevent collapse with possible personal injury and property damage. For general guidance regarding the fabrication, storage, delivery, erection and bracing of trusses and truss systems, see **ANSI/TPI1 Quality Criteria and DSB-22** available from Truss Plate Institute (www.tpinst.org) and **BCSI Building Component Safety Information** available from the Structural Building Component Association (www.sbcacomponents.com)

ENGINEERING BY TRENCO A MiTek Affiliate
818 Soundside Road
Edenton, NC 27932

Job	Truss	Truss Type	Qty	Ply	1004 Serenity-Roof-328 A CP GLH
25030123-01	G03	Common	1	1	I72264669 Job Reference (optional)

Carter Components (Sanford, NC), Sanford, NC - 27332,

Run: 8.73 S Feb 19 2025 Print: 8.730 S Feb 19 2025 MiTek Industries, Inc. Tue Mar 25 09:15:26 Page: 1
ID:?D?Cdqfjr_mjeujLNBFiEnyzBP8-RfC?PsB70Hq3NSgPqnL8w3uITXbGKWrCDoi7J4zJC?f

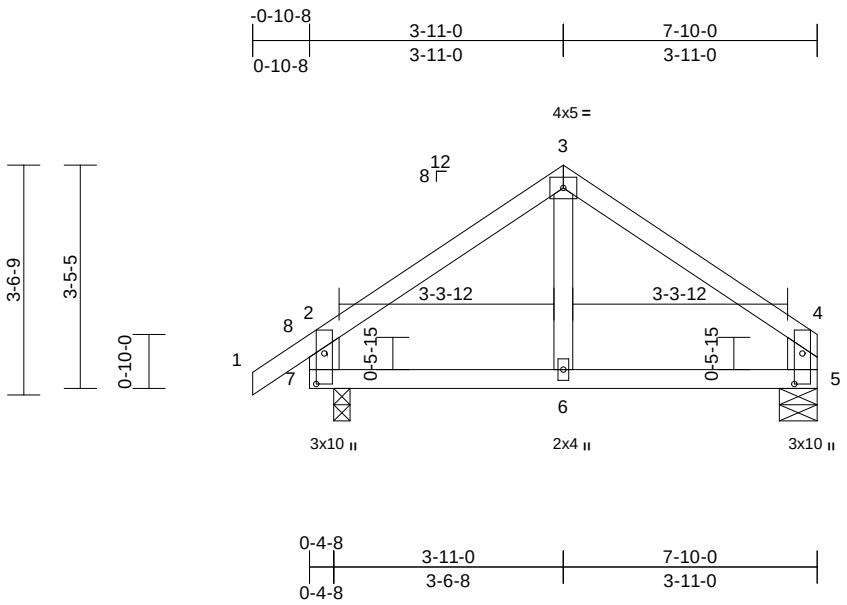

Scale = 1:35.5

Plate Offsets (X, Y): [5:0-5-10,0-1-8], [7:0-5-10,0-1-8]

Loading	(psf)	Spacing	2-0-0	CSI		DEFL	in	(loc)	l/defl	L/d	PLATES	GRIP
TCLL (roof)	20.0	Plate Grip DOL	1.15	TC	0.29	Vert(LL)	0.01	6-7	>999	240	MT20	244/190
Snow (Pf)	20.0	Lumber DOL	1.15	BC	0.18	Vert(CT)	-0.02	6-7	>999	180		
TCDL	10.0	Rep Stress Incr	YES	WB	0.05	Horz(CT)	0.00	5	n/a	n/a		
BCLL	0.0*	Code	IRC2021/TPI2014	Matrix-MR								
BCDL	10.0										Weight: 34 lb	FT = 20%

LUMBER
TOP CHORD 2x4 SP No.2
BOT CHORD 2x4 SP No.2
WEBS 2x6 SP No.2 *Except* 6-3:2x4 SP No.3

BRACING
TOP CHORD Structural wood sheathing directly applied or 6-0-0 oc purlins, except end verticals.
BOT CHORD Rigid ceiling directly applied or 10-0-0 oc bracing.

REACTIONS (size) 5=0-7-0, 7=0-3-0
Max Horiz 7=82 (LC 11)
Max Uplift 5=-23 (LC 15), 7=-45 (LC 14)
Max Grav 5=378 (LC 22), 7=450 (LC 21)

FORCES (lb) - Maximum Compression/Maximum Tension
TOP CHORD 1-2=0/43, 2-3=-337/190, 3-4=-345/186, 2-7=-408/234, 4-5=-332/165
BOT CHORD 6-7=-83/194, 5-6=-83/194
WEBS 3-6=-65/137

NOTES
1) Unbalanced roof live loads have been considered for this design.
2) Wind: ASCE 7-16; Vult=130mph (3-second gust) Vasd=103mph; TCDL=6.0psf; BCDL=6.0psf; h=25ft; Cat. II; Exp B; Enclosed; MWFRS (envelope) exterior zone and C-C Exterior(2E) -0-10-8 to 2-1-8, Exterior(2R) 2-1-8 to 4-7-4, Exterior(2E) 4-7-4 to 7-7-4 zone; end vertical left exposed; porch left and right exposed;C-C for members and forces & MWFRS for reactions shown; Lumber DOL=1.60 plate grip DOL=1.60
3) TCLL: ASCE 7-16; Pr=20.0 psf (roof LL: Lum DOL=1.15 Plate DOL=1.15); Pf=20.0 psf (Lum DOL=1.15 Plate DOL=1.15); Is=1.0; Rough Cat B; Fully Exp.; Ce=0.9; Cs=1.00; Ct=1.10
4) Unbalanced snow loads have been considered for this design.
5) This truss has been designed for greater of min roof live load of 12.0 psf or 1.00 times flat roof load of 20.0 psf on overhangs non-concurrent with other live loads.
6) This truss has been designed for a 10.0 psf bottom chord live load nonconcurrent with any other live loads.
7) * This truss has been designed for a live load of 20.0psf on the bottom chord in all areas where a rectangle 3-06-00 tall by 2-00-00 wide will fit between the bottom chord and any other members.
8) Provide mechanical connection (by others) of truss to bearing plate capable of withstanding 45 lb uplift at joint 7.
9) One H2.5A Simpson Strong-Tie connectors recommended to connect truss to bearing walls due to UPLIFT at jt(s) 5. This connection is for uplift only and does not consider lateral forces.

LOAD CASE(S) Standard

March 26,2025

WARNING - Verify design parameters and READ NOTES ON THIS AND INCLUDED MITEK REFERENCE PAGE MII-7473 rev. 1/2/2023 BEFORE USE.
Design valid for use only with MiTek® connectors. This design is based only upon parameters shown, and is for an individual building component, not a truss system. Before use, the building designer must verify the applicability of design parameters and properly incorporate this design into the overall building design. Bracing indicated is to prevent buckling of individual truss web and/or chord members only. Additional temporary and permanent bracing is always required for stability and to prevent collapse with possible personal injury and property damage. For general guidance regarding the fabrication, storage, delivery, erection and bracing of trusses and truss systems, see **ANSI/TPI1 Quality Criteria and DSB-22** available from Truss Plate Institute (www.tpinst.org) and **BCSI Building Component Safety Information** available from the Structural Building Component Association (www.sbcacomponents.com)

ENGINEERING BY TRENCO A MiTek Affiliate
818 Soundside Road
Edenton, NC 27932

Job	Truss	Truss Type	Qty	Ply	1004 Serenity-Roof-328 A CP GLH
25030123-01	G04	Common Girder	1	**2**	I72264670 Job Reference (optional)

Carter Components (Sanford, NC), Sanford, NC - 27332,

Run: 8.73 S Feb 19 2025 Print: 8.730 S Feb 19 2025 MiTek Industries, Inc. Tue Mar 25 09:15:27 Page: 1
ID:mIX4RCA3yu3lhLxPq??YxdyzBOU-RfC?PsB70Hq3NSgPqnL8w3uITXbGKWrCDoi7J4zJC?f

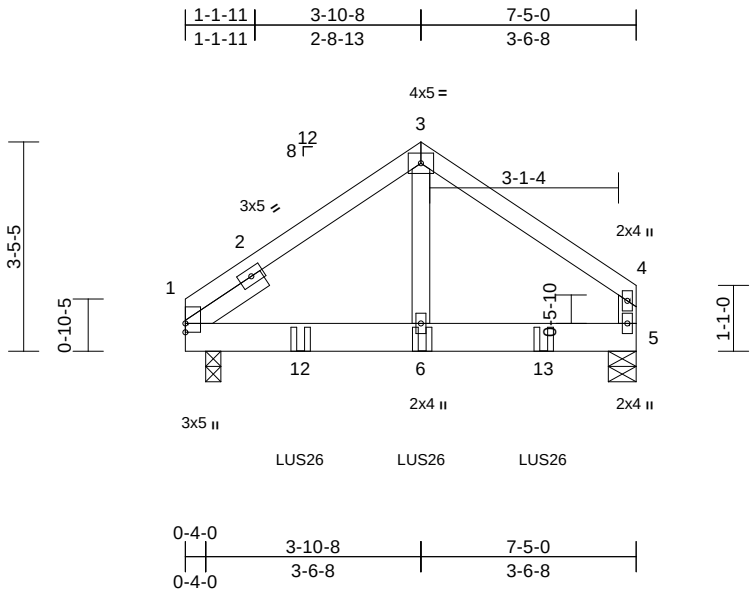

Scale = 1:37.9

Loading	(psf)	Spacing	2-0-0	CSI		DEFL	in	(loc)	l/defl	L/d	PLATES	GRIP
TCLL (roof)	20.0	Plate Grip DOL	1.15	TC	0.26	Vert(LL)	-0.11	6	>761	240	MT20	244/190
Snow (Pf)	20.0	Lumber DOL	1.15	BC	0.84	Vert(CT)	-0.19	6	>464	180		
TCDL	10.0	Rep Stress Incr	NO	WB	0.03	Horz(CT)	0.04	1	n/a	n/a		
BCLL	0.0*	Code	IRC2021/TPI2014	Matrix-MP								
BCDL	10.0										Weight: 76 lb	FT = 20%

LUMBER
TOP CHORD 2x4 SP No.2
BOT CHORD 2x6 SP No.2
WEBS 2x4 SP No.3

BRACING
TOP CHORD Structural wood sheathing directly applied or 6-0-0 oc purlins, except end verticals.
BOT CHORD Rigid ceiling directly applied or 10-0-0 oc bracing.

REACTIONS (size) 1=0-3-0, 5=0-5-8
Max Horiz 1=60 (LC 9)
Max Uplift 1=-169 (LC 12), 5=-167 (LC 13)
Max Grav 1=857 (LC 18), 5=814 (LC 19)

FORCES (lb) - Maximum Compression/Maximum Tension
TOP CHORD 1-3=-245/126, 3-4=-73/73, 4-5=-164/70
BOT CHORD 1-6=-57/60, 5-6=0/0
WEBS 3-6=-261/40

NOTES
1) 2-ply truss to be connected together with 10d (0.131"x3") nails as follows:
Top chords connected as follows: 2x4 - 1 row at 0-9-0 oc.
Bottom chords connected as follows: 2x6 - 2 rows staggered at 0-9-0 oc.
Web connected as follows: 2x4 - 1 row at 0-9-0 oc.
2) All loads are considered equally applied to all plies, except if noted as front (F) or back (B) face in the LOAD CASE(S) section. Ply to ply connections have been provided to distribute only loads noted as (F) or (B), unless otherwise indicated.
3) Unbalanced roof live loads have been considered for this design.
4) Wind: ASCE 7-16; Vult=130mph (3-second gust) Vasd=103mph; TCDL=6.0psf; BCDL=6.0psf; h=25ft; Cat. II; Exp B; Enclosed; MWFRS (envelope) exterior zone; end vertical left exposed; porch left and right exposed; Lumber DOL=1.60 plate grip DOL=1.60
5) TCLL: ASCE 7-16; Pr=20.0 psf (roof LL: Lum DOL=1.15 Plate DOL=1.15); Pf=20.0 psf (Lum DOL=1.15 Plate DOL=1.15); Is=1.0; Rough Cat B; Fully Exp.; Ce=0.9; Cs=1.00; Ct=1.10
6) Unbalanced snow loads have been considered for this design.
7) This truss has been designed for a 10.0 psf bottom chord live load nonconcurrent with any other live loads.
8) * This truss has been designed for a live load of 20.0psf on the bottom chord in all areas where a rectangle 3-06-00 tall by 2-00-00 wide will fit between the bottom chord and any other members.
9) One H2.5A Simpson Strong-Tie connectors recommended to connect truss to bearing walls due to UPLIFT at jt(s) 5 and 1. This connection is for uplift only and does not consider lateral forces.
10) Use Simpson Strong-Tie LUS26 (4-10d Girder, 3-10d Truss, Single Ply Girder) or equivalent spaced at 2-0-0 oc max. starting at 1-10-12 from the left end to 5-10-12 to connect truss(es) to back face of bottom chord.
11) Fill all nail holes where hanger is in contact with lumber.

LOAD CASE(S) Standard
1) Dead + Snow (balanced): Lumber Increase=1.15, Plate Increase=1.15
Uniform Loads (lb/ft)
Vert: 1-3=-60, 3-4=-60, 5-7=-20
Concentrated Loads (lb)
Vert: 6=-313 (B), 12=-313 (B), 13=-313 (B)

March 26,2025

WARNING - Verify design parameters and READ NOTES ON THIS AND INCLUDED MITEK REFERENCE PAGE MII-7473 rev. 1/2/2023 BEFORE USE.
Design valid for use only with MiTek® connectors. This design is based only upon parameters shown, and is for an individual building component, not a truss system. Before use, the building designer must verify the applicability of design parameters and properly incorporate this design into the overall building design. Bracing indicated is to prevent buckling of individual truss web and/or chord members only. Additional temporary and permanent bracing is always required for stability and to prevent collapse with possible personal injury and property damage. For general guidance regarding the fabrication, storage, delivery, erection and bracing of trusses and truss systems, see **ANSI/TPI1 Quality Criteria and DSB-22** available from Truss Plate Institute (www.tpinst.org) and **BCSI Building Component Safety Information** available from the Structural Building Component Association (www.sbcacomponents.com)

ENGINEERING BY TRENCO A MiTek Affiliate
818 Soundside Road
Edenton, NC 27932

Job	Truss	Truss Type	Qty	Ply	1004 Serenity-Roof-328 A CP GLH
25030123-01	H01	Monopitch	1	1	I72264671 Job Reference (optional)

Carter Components (Sanford, NC), Sanford, NC - 27332, Run: 8.73 S Feb 19 2025 Print: 8.730 S Feb 19 2025 MiTek Industries, Inc. Tue Mar 25 09:15:27 Page: 1

ID:1aYKOOAVMhpxxEzlIwYOtKyzBSM-RfC?PsB70Hq3NSgPqnL8w3uITXbGKWrCDoi7J4zJC?f

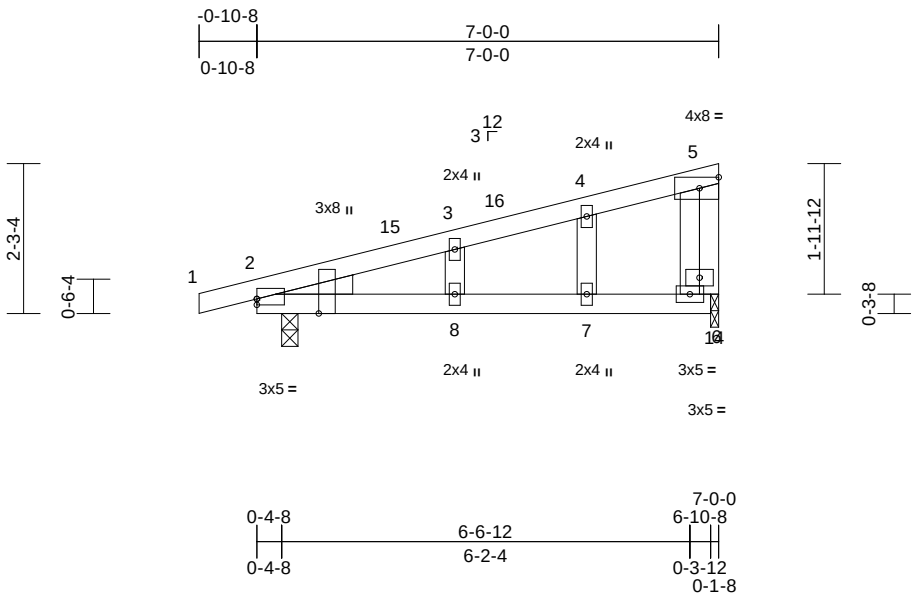

Scale = 1:34.9

Plate Offsets (X, Y): [2:Edge,0-1-1], [2:0-2-10,Edge]

Loading	(psf)	Spacing	2-0-0	CSI		DEFL	in	(loc)	l/defl	L/d	PLATES	GRIP
TCLL (roof)	20.0	Plate Grip DOL	1.15	TC	0.60	Vert(LL)	0.06	7-8	>999	240	MT20	244/190
Snow (Pf)	20.0	Lumber DOL	1.15	BC	0.53	Vert(CT)	-0.09	7-8	>944	180		
TCDL	10.0	Rep Stress Incr	YES	WB	0.01	Horz(CT)	0.01	2	n/a	n/a		
BCLL	0.0*	Code	IRC2021/TPI2014	Matrix-MR								
BCDL	10.0										Weight: 32 lb	FT = 20%

LUMBER

TOP CHORD	2x4 SP No.2
BOT CHORD	2x4 SP No.2
WEBS	2x4 SP No.3
OTHERS	2x4 SP No.3
WEDGE	Left: 2x4 SP No.3

BRACING

TOP CHORD	Structural wood sheathing directly applied or 6-0-0 oc purlins, except end verticals.
BOT CHORD	Rigid ceiling directly applied or 10-0-0 oc bracing.

REACTIONS (size) 2=0-3-0, 14=0-1-8
Max Horiz 2=72 (LC 10)
Max Uplift 2=-137 (LC 10), 14=-98 (LC 10)
Max Grav 2=469 (LC 21), 14=311 (LC 21)

FORCES (lb) - Maximum Compression/Maximum Tension

TOP CHORD	1-2=0/18, 2-3=-295/143, 3-4=-277/159, 4-5=-255/176, 5-6=-137/170
BOT CHORD	2-8=-212/263, 7-8=-212/263, 6-7=-212/263
WEBS	4-7=-60/47, 3-8=-64/43, 5-14=-333/268

NOTES

1) Wind: ASCE 7-16; Vult=130mph (3-second gust) Vasd=103mph; TCDL=6.0psf; BCDL=6.0psf; h=25ft; Cat. II; Exp B; Enclosed; MWFRS (envelope) exterior zone and C-C Exterior(2E) -0-10-8 to 2-1-8, Interior (1) 2-1-8 to 3-8-8, Exterior(2E) 3-8-8 to 6-8-8 zone; cantilever left exposed ; end vertical left exposed; porch left and right exposed;C-C for members and forces & MWFRS for reactions shown; Lumber DOL=1.60 plate grip DOL=1.60
2) Truss designed for wind loads in the plane of the truss only. For studs exposed to wind (normal to the face), see Standard Industry Gable End Details as applicable, or consult qualified building designer as per ANSI/TPI 1.
3) TCLL: ASCE 7-16; Pr=20.0 psf (roof LL: Lum DOL=1.15 Plate DOL=1.15); Pf=20.0 psf (Lum DOL=1.15 Plate DOL=1.15); Is=1.0; Rough Cat B; Fully Exp.; Ce=0.9; Cs=1.00; Ct=1.10
4) Unbalanced snow loads have been considered for this design.
5) This truss has been designed for greater of min roof live load of 12.0 psf or 1.00 times flat roof load of 20.0 psf on overhangs non-concurrent with other live loads.
6) Gable studs spaced at 2-0-0 oc.
7) This truss has been designed for a 10.0 psf bottom chord live load nonconcurrent with any other live loads.
8) * This truss has been designed for a live load of 20.0psf on the bottom chord in all areas where a rectangle 3-06-00 tall by 2-00-00 wide will fit between the bottom chord and any other members.
9) Bearing at joint(s) 14 considers parallel to grain value using ANSI/TPI 1 angle to grain formula. Building designer should verify capacity of bearing surface.
10) Provide mechanical connection (by others) of truss to bearing plate at joint(s) 14.
11) One H2.5A Simpson Strong-Tie connectors recommended to connect truss to bearing walls due to UPLIFT at jt(s) 2 and 14. This connection is for uplift only and does not consider lateral forces.

LOAD CASE(S) Standard

March 26,2025

WARNING - Verify design parameters and READ NOTES ON THIS AND INCLUDED MITEK REFERENCE PAGE MII-7473 rev. 1/2/2023 BEFORE USE.
Design valid for use only with MiTek® connectors. This design is based only upon parameters shown, and is for an individual building component, not a truss system. Before use, the building designer must verify the applicability of design parameters and properly incorporate this design into the overall building design. Bracing indicated is to prevent buckling of individual truss web and/or chord members only. Additional temporary and permanent bracing is always required for stability and to prevent collapse with possible personal injury and property damage. For general guidance regarding the fabrication, storage, delivery, erection and bracing of trusses and truss systems, see **ANSI/TPI1 Quality Criteria and DSB-22** available from Truss Plate Institute (www.tpinst.org) and **BCSI Building Component Safety Information** available from the Structural Building Component Association (www.sbcacomponents.com)

ENGINEERING BY TRENCO A MiTek Affiliate
818 Soundside Road
Edenton, NC 27932

Job	Truss	Truss Type	Qty	Ply	1004 Serenity-Roof-328 A CP GLH
25030123-01	H02	Monopitch	5	1	I72264672 Job Reference (optional)

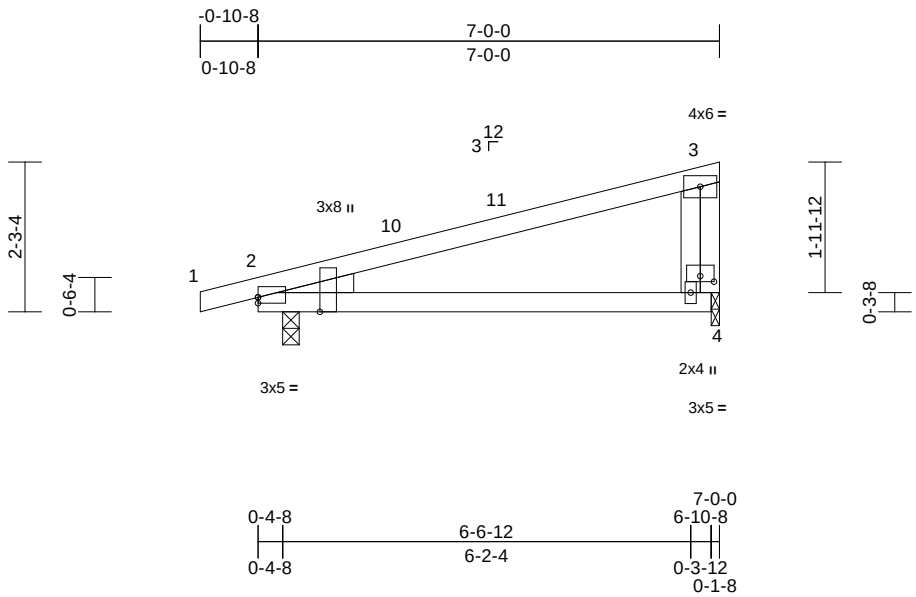

Scale = 1:34.9

Plate Offsets (X, Y): [2:Edge,0-1-1], [2:0-2-10,Edge], [4:0-2-8,0-1-0]

Loading	(psf)	Spacing	2-0-0	CSI		DEFL	in	(loc)	l/defl	L/d	PLATES	GRIP
TCLL (roof)	20.0	Plate Grip DOL	1.15	TC	0.78	Vert(LL)	0.16	4-9	>518	240	MT20	244/190
Snow (Pf)	20.0	Lumber DOL	1.15	BC	0.64	Vert(CT)	-0.21	4-9	>390	180		
TCDL	10.0	Rep Stress Incr	YES	WB	0.00	Horz(CT)	0.02	2	n/a	n/a		
BCLL	0.0*	Code	IRC2021/TPI2014	Matrix-MP								
BCDL	10.0										Weight: 29 lb	FT = 20%

LUMBER

TOP CHORD	2x4 SP No.2
BOT CHORD	2x4 SP No.2
WEBS	2x4 SP No.3
OTHERS	2x4 SP No.3
WEDGE	Left: 2x4 SP No.3

BRACING

TOP CHORD	Structural wood sheathing directly applied or 6-0-0 oc purlins, except end verticals.
BOT CHORD	Rigid ceiling directly applied or 10-0-0 oc bracing.

REACTIONS (size) 2=0-3-0, 4=0-1-8
Max Horiz 2=72 (LC 10)
Max Uplift 2=-133 (LC 10), 4=-102 (LC 10)
Max Grav 2=457 (LC 21), 4=322 (LC 21)

FORCES (lb) - Maximum Compression/Maximum Tension
TOP CHORD 1-2=0/18, 2-3=-108/102, 3-4=-225/179
BOT CHORD 2-4=-135/127

NOTES

1) Wind: ASCE 7-16; Vult=130mph (3-second gust) Vasd=103mph; TCDL=6.0psf; BCDL=6.0psf; h=25ft; Cat. II; Exp B; Enclosed; MWFRS (envelope) exterior zone and C-C Exterior(2E) -0-10-8 to 2-1-8, Interior (1) 2-1-8 to 3-8-8, Exterior(2E) 3-8-8 to 6-8-8 zone; cantilever left exposed ; end vertical left exposed; porch left and right exposed;C-C for members and forces & MWFRS for reactions shown; Lumber DOL=1.60 plate grip DOL=1.60
2) TCLL: ASCE 7-16; Pr=20.0 psf (roof LL: Lum DOL=1.15 Plate DOL=1.15); Pf=20.0 psf (Lum DOL=1.15 Plate DOL=1.15); Is=1.0; Rough Cat B; Fully Exp.; Ce=0.9; Cs=1.00; Ct=1.10
3) Unbalanced snow loads have been considered for this design.
4) This truss has been designed for greater of min roof live load of 12.0 psf or 1.00 times flat roof load of 20.0 psf on overhangs non-concurrent with other live loads.
5) This truss has been designed for a 10.0 psf bottom chord live load nonconcurrent with any other live loads.
6) * This truss has been designed for a live load of 20.0psf on the bottom chord in all areas where a rectangle 3-06-00 tall by 2-00-00 wide will fit between the bottom chord and any other members.
7) Bearing at joint(s) 4 considers parallel to grain value using ANSI/TPI 1 angle to grain formula. Building designer should verify capacity of bearing surface.
8) Provide mechanical connection (by others) of truss to bearing plate at joint(s) 4.
9) One H2.5A Simpson Strong-Tie connectors recommended to connect truss to bearing walls due to UPLIFT at jt(s) 2 and 4. This connection is for uplift only and does not consider lateral forces.

LOAD CASE(S) Standard

March 26,2025

WARNING - Verify design parameters and READ NOTES ON THIS AND INCLUDED MITEK REFERENCE PAGE MII-7473 rev. 1/2/2023 BEFORE USE.
Design valid for use only with MiTek® connectors. This design is based only upon parameters shown, and is for an individual building component, not a truss system. Before use, the building designer must verify the applicability of design parameters and properly incorporate this design into the overall building design. Bracing indicated is to prevent buckling of individual truss web and/or chord members only. Additional temporary and permanent bracing is always required for stability and to prevent collapse with possible personal injury and property damage. For general guidance regarding the fabrication, storage, delivery, erection and bracing of trusses and truss systems, see **ANSI/TPI1 Quality Criteria and DSB-22** available from Truss Plate Institute (www.tpinst.org) and **BCSI Building Component Safety Information** available from the Structural Building Component Association (www.sbcacomponents.com)

ENGINEERING BY TRENCO A MiTek Affiliate
818 Soundside Road
Edenton, NC 27932

Job	Truss	Truss Type	Qty	Ply	1004 Serenity-Roof-328 A CP GLH
25030123-01	H03	Monopitch	1	1	I72264673 Job Reference (optional)

Carter Components (Sanford, NC), Sanford, NC - 27332, Run: 8.73 S Feb 19 2025 Print: 8.730 S Feb 19 2025 MiTek Industries, Inc. Tue Mar 25 09:15:27 Page: 1
ID:qsbcfelXa5E8GwWwy0z5_xykdBf-RfC?PsB70Hq3NSgPqnL8w3uITXbGKWrCDoi7J4zJC?f

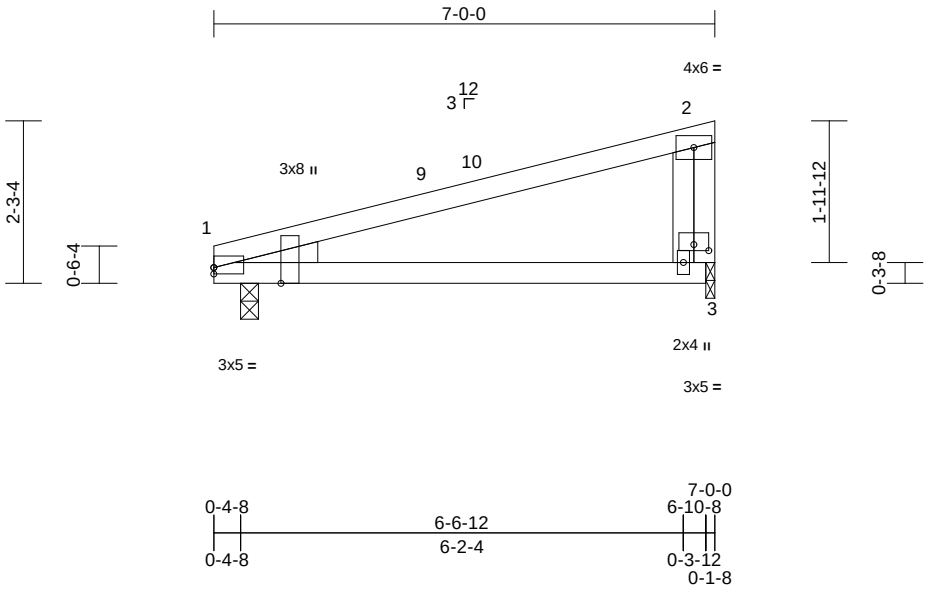

Scale = 1:32.2

Plate Offsets (X, Y): [1:Edge,0-1-1], [1:0-2-10,Edge], [3:0-2-8,0-1-0]

Loading	(psf)	Spacing	2-0-0	CSI		DEFL	in	(loc)	l/defl	L/d	PLATES	GRIP
TCLL (roof)	20.0	Plate Grip DOL	1.15	TC	0.82	Vert(LL)	0.17	3-8	>472	240	MT20	244/190
Snow (Pf)	20.0	Lumber DOL	1.15	BC	0.70	Vert(CT)	-0.22	3-8	>361	180		
TCDL	10.0	Rep Stress Incr	YES	WB	0.00	Horz(CT)	0.03	1	n/a	n/a		
BCLL	0.0*	Code	IRC2021/TPI2014	Matrix-MP								
BCDL	10.0										Weight: 28 lb	FT = 20%

LUMBER
TOP CHORD 2x4 SP No.2
BOT CHORD 2x4 SP No.2
WEBS 2x4 SP No.3
OTHERS 2x4 SP No.3
WEDGE Left: 2x4 SP No.3

BRACING
TOP CHORD Structural wood sheathing directly applied or 6-0-0 oc purlins, except end verticals.
BOT CHORD Rigid ceiling directly applied or 10-0-0 oc bracing.

REACTIONS (size) 1=0-3-0, 3=0-1-8
Max Horiz 1=62 (LC 14)
Max Uplift 1=-97 (LC 10), 3=-105 (LC 10)
Max Grav 1=373 (LC 21), 3=332 (LC 21)

FORCES (lb) - Maximum Compression/Maximum Tension
TOP CHORD 1-2=-188/130, 2-3=-230/186
BOT CHORD 1-3=-217/211

NOTES
1) Wind: ASCE 7-16; Vult=130mph (3-second gust) Vasd=103mph; TCDL=6.0psf; BCDL=6.0psf; h=25ft; Cat. II; Exp B; Enclosed; MWFRS (envelope) exterior zone and C-C Exterior(2E) 0-0-0 to 3-0-0, Interior (1) 3-0-0 to 3-8-8, Exterior(2E) 3-8-8 to 6-8-8 zone; cantilever left exposed ; porch left and right exposed;C-C for members and forces & MWFRS for reactions shown; Lumber DOL=1.60 plate grip DOL=1.60
2) TCLL: ASCE 7-16; Pr=20.0 psf (roof LL: Lum DOL=1.15 Plate DOL=1.15); Pf=20.0 psf (Lum DOL=1.15 Plate DOL=1.15); Is=1.0; Rough Cat B; Fully Exp.; Ce=0.9; Cs=1.00; Ct=1.10
3) Unbalanced snow loads have been considered for this design.
4) This truss has been designed for a 10.0 psf bottom chord live load nonconcurrent with any other live loads.
5) * This truss has been designed for a live load of 20.0psf on the bottom chord in all areas where a rectangle 3-06-00 tall by 2-00-00 wide will fit between the bottom chord and any other members.
6) Bearing at joint(s) 3 considers parallel to grain value using ANSI/TPI 1 angle to grain formula. Building designer should verify capacity of bearing surface.
7) Provide mechanical connection (by others) of truss to bearing plate at joint(s) 3.
8) One H2.5A Simpson Strong-Tie connectors recommended to connect truss to bearing walls due to UPLIFT at jt(s) 1 and 3. This connection is for uplift only and does not consider lateral forces.

LOAD CASE(S) Standard

March 26,2025

WARNING - Verify design parameters and READ NOTES ON THIS AND INCLUDED MITEK REFERENCE PAGE MII-7473 rev. 1/2/2023 BEFORE USE.
Design valid for use only with MiTek® connectors. This design is based only upon parameters shown, and is for an individual building component, not a truss system. Before use, the building designer must verify the applicability of design parameters and properly incorporate this design into the overall building design. Bracing indicated is to prevent buckling of individual truss web and/or chord members only. Additional temporary and permanent bracing is always required for stability and to prevent collapse with possible personal injury and property damage. For general guidance regarding the fabrication, storage, delivery, erection and bracing of trusses and truss systems, see **ANSI/TPI1 Quality Criteria and DSB-22** available from Truss Plate Institute (www.tpinst.org) and **BCSI Building Component Safety Information** available from the Structural Building Component Association (www.sbcacomponents.com)

ENGINEERING BY TRENCO A MiTek Affiliate
818 Soundside Road
Edenton, NC 27932

Job	Truss	Truss Type	Qty	Ply	1004 Serenity-Roof-328 A CP GLH
25030123-01	H04	Monopitch	3	1	I72264674 Job Reference (optional)

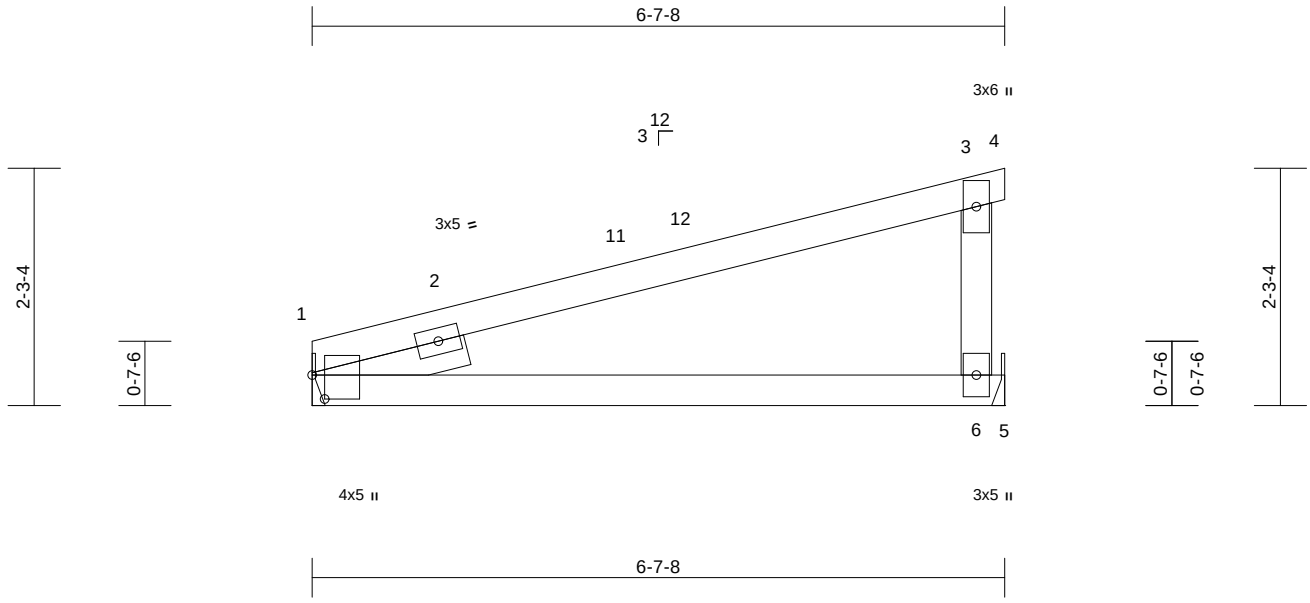

Scale = 1:22

Plate Offsets (X, Y): [1:0-2-12,0-1-7]

Loading	(psf)	Spacing	2-0-0	CSI		DEFL	in	(loc)	l/defl	L/d	PLATES	GRIP
TCLL (roof)	20.0	Plate Grip DOL	1.15	TC	0.68	Vert(LL)	0.07	6-9	>999	240	MT20	244/190
Snow (Pf)	20.0	Lumber DOL	1.15	BC	0.54	Vert(CT)	-0.09	6-9	>838	180		
TCDL	10.0	Rep Stress Incr	YES	WB	0.00	Horz(CT)	0.02	1	n/a	n/a		
BCLL	0.0*	Code	IRC2021/TPI2014	Matrix-MR								
BCDL	10.0										Weight: 25 lb	FT = 20%

LUMBER
TOP CHORD 2x4 SP No.2
BOT CHORD 2x4 SP No.2
OTHERS 2x4 SP No.2
SLIDER Left 2x4 SP No.3 -- 1-6-0

BRACING
TOP CHORD Structural wood sheathing directly applied or 6-0-0 oc purlins.
BOT CHORD Rigid ceiling directly applied or 10-0-0 oc bracing.

REACTIONS (size) 1= Mechanical, 6= Mechanical
Max Horiz 1=60 (LC 10)
Max Uplift 1=-85 (LC 10), 6=-109 (LC 10)
Max Grav 1=333 (LC 20), 6=363 (LC 20)

FORCES (lb) - Maximum Compression/Maximum Tension
TOP CHORD 1-3=-272/161, 3-4=-6/0, 3-6=-239/172
BOT CHORD 1-6=-350/381, 5-6=0/0

NOTES
1) Wind: ASCE 7-16; Vult=130mph (3-second gust) Vasd=103mph; TCDL=6.0psf; BCDL=6.0psf; h=25ft; Cat. II; Exp B; Enclosed; MWFRS (envelope) exterior zone and C-C Exterior(2E) 0-0-0 to 3-0-0, Interior (1) 3-0-0 to 3-7-8, Exterior(2E) 3-7-8 to 6-7-8 zone; porch left and right exposed;C-C for members and forces & MWFRS for reactions shown; Lumber DOL=1.60 plate grip DOL=1.60
2) TCLL: ASCE 7-16; Pr=20.0 psf (roof LL: Lum DOL=1.15 Plate DOL=1.15); Pf=20.0 psf (Lum DOL=1.15 Plate DOL=1.15); Is=1.0; Rough Cat B; Fully Exp.; Ce=0.9; Cs=1.00; Ct=1.10
3) Unbalanced snow loads have been considered for this design.
4) This truss has been designed for a 10.0 psf bottom chord live load nonconcurrent with any other live loads.
5) * This truss has been designed for a live load of 20.0psf on the bottom chord in all areas where a rectangle 3-06-00 tall by 2-00-00 wide will fit between the bottom chord and any other members.
6) Refer to girder(s) for truss to truss connections.
7) Provide mechanical connection (by others) of truss to bearing plate capable of withstanding 85 lb uplift at joint 1 and 109 lb uplift at joint 6.

LOAD CASE(S) Standard

March 26,2025

WARNING - Verify design parameters and READ NOTES ON THIS AND INCLUDED MITEK REFERENCE PAGE MII-7473 rev. 1/2/2023 BEFORE USE.
Design valid for use only with MiTek® connectors. This design is based only upon parameters shown, and is for an individual building component, not a truss system. Before use, the building designer must verify the applicability of design parameters and properly incorporate this design into the overall building design. Bracing indicated is to prevent buckling of individual truss web and/or chord members only. Additional temporary and permanent bracing is always required for stability and to prevent collapse with possible personal injury and property damage. For general guidance regarding the fabrication, storage, delivery, erection and bracing of trusses and truss systems, see **ANSI/TPI1 Quality Criteria and DSB-22** available from Truss Plate Institute (www.tpinst.org) and **BCSI Building Component Safety Information** available from the Structural Building Component Association (www.sbcacomponents.com)

ENGINEERING BY TRENCO A MiTek Affiliate
818 Soundside Road
Edenton, NC 27932

Job	Truss	Truss Type	Qty	Ply	1004 Serenity-Roof-328 A CP GLH
25030123-01	HJ211	Jack-Open	1	1	I72264675 Job Reference (optional)

Carter Components (Sanford, NC), Sanford, NC - 27332,

Run: 8.73 S Feb 19 2025 Print: 8.730 S Feb 19 2025 MiTek Industries, Inc. Tue Mar 25 09:15:27 Page: 1
ID:sO9akXcGp1tsoTjN9u??hcyzBDb-RfC?PsB70Hq3NSgPqnL8w3uITXbGKWrCDoi7J4zJC?f

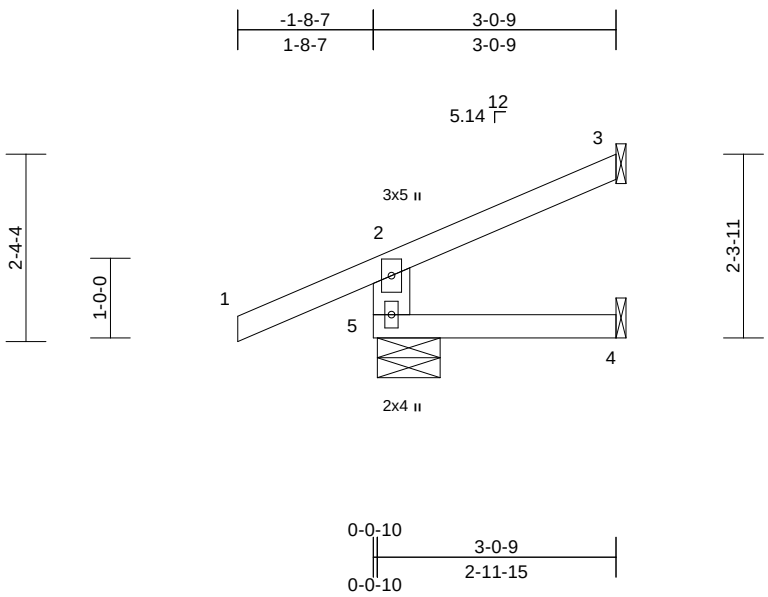

Scale = 1:28.9

Loading	(psf)	Spacing	2-0-0	CSI		DEFL	in	(loc)	l/defl	L/d	PLATES	GRIP
TCLL (roof)	20.0	Plate Grip DOL	1.15	TC	0.40	Vert(LL)	0.00	4-5	>999	240	MT20	244/190
Snow (Pf)	20.0	Lumber DOL	1.15	BC	0.11	Vert(CT)	-0.01	4-5	>999	180		
TCDL	10.0	Rep Stress Incr	YES	WB	0.00	Horz(CT)	-0.01	3	n/a	n/a		
BCLL	0.0*	Code	IRC2021/TPI2014	Matrix-MR								
BCDL	10.0										Weight: 14 lb	FT = 20%

LUMBER
TOP CHORD 2x4 SP No.2
BOT CHORD 2x4 SP No.2
WEBS 2x6 SP No.2

BRACING
TOP CHORD Structural wood sheathing directly applied or 3-0-9 oc purlins, except end verticals.
BOT CHORD Rigid ceiling directly applied or 10-0-0 oc bracing.

REACTIONS (size) 3= Mechanical, 4= Mechanical, 5=0-9-7
Max Horiz 5=59 (LC 14)
Max Uplift 3=-36 (LC 14), 5=-47 (LC 10)
Max Grav 3=82 (LC 21), 4=46 (LC 7), 5=394 (LC 21)

FORCES (lb) - Maximum Compression/Maximum Tension
TOP CHORD 2-5=-349/235, 1-2=0/70, 2-3=-68/27
BOT CHORD 4-5=0/0

NOTES
1) Wind: ASCE 7-16; Vult=130mph (3-second gust) Vasd=103mph; TCDL=6.0psf; BCDL=6.0psf; h=25ft; Cat. II; Exp B; Enclosed; MWFRS (envelope) exterior zone and C-C Corner (3) -1-8-7 to 2-6-8, Exterior(2R) 2-6-8 to 2-11-13 zone; end vertical left exposed;C-C for members and forces & MWFRS for reactions shown; Lumber DOL=1.60 plate grip DOL=1.60
2) TCLL: ASCE 7-16; Pr=20.0 psf (roof LL: Lum DOL=1.15 Plate DOL=1.15); Pf=20.0 psf (Lum DOL=1.15 Plate DOL=1.15); Is=1.0; Rough Cat B; Fully Exp.; Ce=0.9; Cs=1.00; Ct=1.10
3) Unbalanced snow loads have been considered for this design.
4) This truss has been designed for greater of min roof live load of 12.0 psf or 1.00 times flat roof load of 20.0 psf on overhangs non-concurrent with other live loads.
5) This truss has been designed for a 10.0 psf bottom chord live load nonconcurrent with any other live loads.
6) * This truss has been designed for a live load of 20.0psf on the bottom chord in all areas where a rectangle 3-06-00 tall by 2-00-00 wide will fit between the bottom chord and any other members.
7) Bearings are assumed to be: , Joint 5 User Defined .
8) Refer to girder(s) for truss to truss connections.
9) Provide mechanical connection (by others) of truss to bearing plate capable of withstanding 47 lb uplift at joint 5 and 36 lb uplift at joint 3.

LOAD CASE(S) Standard

March 26,2025

WARNING - Verify design parameters and READ NOTES ON THIS AND INCLUDED MITEK REFERENCE PAGE MII-7473 rev. 1/2/2023 BEFORE USE.
Design valid for use only with MiTek® connectors. This design is based only upon parameters shown, and is for an individual building component, not a truss system. Before use, the building designer must verify the applicability of design parameters and properly incorporate this design into the overall building design. Bracing indicated is to prevent buckling of individual truss web and/or chord members only. Additional temporary and permanent bracing is always required for stability and to prevent collapse with possible personal injury and property damage. For general guidance regarding the fabrication, storage, delivery, erection and bracing of trusses and truss systems, see **ANSI/TPI1 Quality Criteria and DSB-22** available from Truss Plate Institute (www.tpinst.org) and **BCSI Building Component Safety Information** available from the Structural Building Component Association (www.sbcacomponents.com)

ENGINEERING BY TRENCO A MiTek Affiliate
818 Soundside Road
Edenton, NC 27932

Job	Truss	Truss Type	Qty	Ply	1004 Serenity-Roof-328 A CP GLH
25030123-01	J01	Jack-Open Girder	1	1	I72264676 Job Reference (optional)

Carter Components (Sanford, NC), Sanford, NC - 27332,

Run: 8.73 S Feb 19 2025 Print: 8.730 S Feb 19 2025 MiTek Industries, Inc. Tue Mar 25 09:15:27 Page: 1
ID:5fFqlE7FhFHmT3VeBQG4whyzBCw-RfC?PsB70Hq3NSgPqnL8w3uITXbGKWrCDoi7J4zJC?f

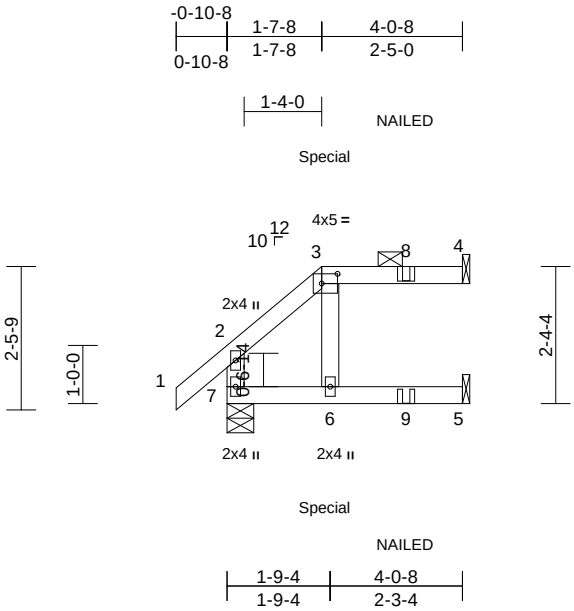

Scale = 1:39.6

Plate Offsets (X, Y): [3:0-3-4,0-2-0]

Loading	(psf)	Spacing	2-0-0	CSI		DEFL	in	(loc)	l/defl	L/d	PLATES	GRIP
TCLL (roof)	20.0	Plate Grip DOL	1.15	TC	0.36	Vert(LL)	-0.03	5-6	>999	240	MT20	244/190
Snow (Pf)	20.0	Lumber DOL	1.15	BC	0.43	Vert(CT)	-0.05	5-6	>911	180		
TCDL	10.0	Rep Stress Incr	NO	WB	0.02	Horz(CT)	0.07	4	n/a	n/a		
BCLL	0.0*	Code	IRC2021/TPI2014	Matrix-MP								
BCDL	10.0										Weight: 18 lb	FT = 20%

LUMBER
TOP CHORD 2x4 SP No.2
BOT CHORD 2x4 SP No.2
WEBS 2x4 SP No.3

BRACING
TOP CHORD Structural wood sheathing directly applied or 4-0-8 oc purlins, except end verticals, and 2-0-0 oc purlins: 3-4.
BOT CHORD Rigid ceiling directly applied or 6-0-0 oc bracing.

REACTIONS (size) 4= Mechanical, 5= Mechanical, 7=0-5-8
Max Horiz 7=64 (LC 53)
Max Uplift 4=-50 (LC 9), 5=-7 (LC 12), 7=-46 (LC 12)
Max Grav 4=176 (LC 33), 5=115 (LC 30), 7=381 (LC 34)

FORCES (lb) - Maximum Compression/Maximum Tension
TOP CHORD 2-7=-266/35, 1-2=0/63, 2-3=-114/21, 3-4=0/0
BOT CHORD 6-7=-6/7, 5-6=0/0
WEBS 3-6=-103/80

NOTES
1) Unbalanced roof live loads have been considered for this design.
2) Wind: ASCE 7-16; Vult=130mph (3-second gust) Vasd=103mph; TCDL=6.0psf; BCDL=6.0psf; h=25ft; Cat. II; Exp B; Enclosed; MWFRS (envelope) exterior zone; end vertical left exposed; Lumber DOL=1.60 plate grip DOL=1.60
3) TCLL: ASCE 7-16; Pr=20.0 psf (roof LL: Lum DOL=1.15 Plate DOL=1.15); Pf=20.0 psf (Lum DOL=1.15 Plate DOL=1.15); Is=1.0; Rough Cat B; Fully Exp.; Ce=0.9; Cs=1.00; Ct=1.10
4) Unbalanced snow loads have been considered for this design.
5) This truss has been designed for greater of min roof live load of 12.0 psf or 1.00 times flat roof load of 20.0 psf on overhangs non-concurrent with other live loads.
6) Provide adequate drainage to prevent water ponding.
7) This truss has been designed for a 10.0 psf bottom chord live load nonconcurrent with any other live loads.
8) * This truss has been designed for a live load of 20.0psf on the bottom chord in all areas where a rectangle 3-06-00 tall by 2-00-00 wide will fit between the bottom chord and any other members.
9) Bearings are assumed to be: , Joint 7 User Defined .
10) Refer to girder(s) for truss to truss connections.
11) Provide mechanical connection (by others) of truss to bearing plate capable of withstanding 50 lb uplift at joint 4 and 7 lb uplift at joint 5.
12) One H2.5A Simpson Strong-Tie connectors recommended to connect truss to bearing walls due to UPLIFT at jt(s) 7. This connection is for uplift only and does not consider lateral forces.
13) Graphical purlin representation does not depict the size or the orientation of the purlin along the top and/or bottom chord.
14) "NAILED" indicates 3-10d (0.148"x3") or 3-12d (0.148"x3.25") toe-nails per NDS guidlines.
15) Hanger(s) or other connection device(s) shall be provided sufficient to support concentrated load(s) 122 lb down and 92 lb up at 1-7-8 on top chord, and 34 lb down and 3 lb up at 1-7-11 on bottom chord. The design/selection of such connection device(s) is the responsibility of others.
16) In the LOAD CASE(S) section, loads applied to the face of the truss are noted as front (F) or back (B).

LOAD CASE(S) Standard
1) Dead + Snow (balanced): Lumber Increase=1.15, Plate Increase=1.15
Uniform Loads (lb/ft)
Vert: 1-2=-60, 2-3=-60, 3-4=-60, 5-7=-20
Concentrated Loads (lb)
Vert: 3=-81 (B), 6=-29 (B), 8=-68 (B), 9=-31 (B)

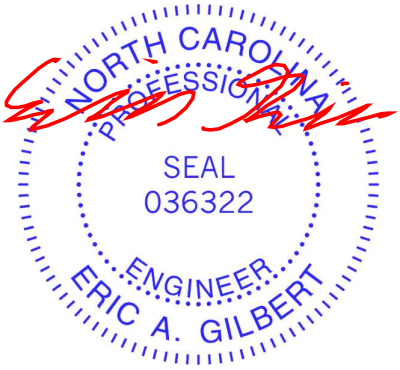

March 26,2025

WARNING - Verify design parameters and READ NOTES ON THIS AND INCLUDED MITEK REFERENCE PAGE MII-7473 rev. 1/2/2023 BEFORE USE.
Design valid for use only with MiTek® connectors. This design is based only upon parameters shown, and is for an individual building component, not a truss system. Before use, the building designer must verify the applicability of design parameters and properly incorporate this design into the overall building design. Bracing indicated is to prevent buckling of individual truss web and/or chord members only. Additional temporary and permanent bracing is always required for stability and to prevent collapse with possible personal injury and property damage. For general guidance regarding the fabrication, storage, delivery, erection and bracing of trusses and truss systems, see **ANSI/TPI1 Quality Criteria and DSB-22** available from Truss Plate Institute (www.tpinst.org) and **BCSI Building Component Safety Information** available from the Structural Building Component Association (www.sbcacomponents.com)

ENGINEERING BY TRENCO A MiTek Affiliate
818 Soundside Road
Edenton, NC 27932

Job	Truss	Truss Type	Qty	Ply	1004 Serenity-Roof-328 A CP GLH
25030123-01	J02	Jack-Open	1	1	I72264677 Job Reference (optional)

Carter Components (Sanford, NC), Sanford, NC - 27332,

Run: 8.73 S Feb 19 2025 Print: 8.730 S Feb 19 2025 MiTek Industries, Inc. Tue Mar 25 09:15:27 Page: 1
ID:oyh2Rm0XL_ipQxTyo5dVCHyzBEM-RfC?PsB70Hq3NSgPqnL8w3uITXbGKWrCDoi7J4zJC?f

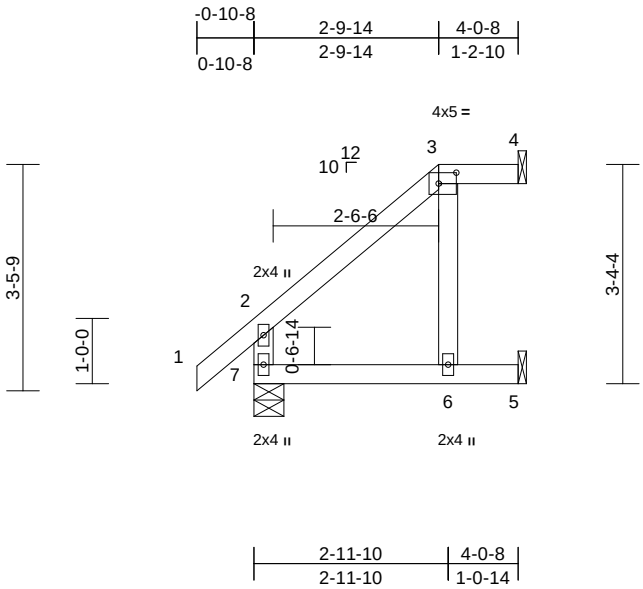

Scale = 1:35.3

Plate Offsets (X, Y): [3:0-3-4,0-2-0]

Loading	(psf)	Spacing	2-0-0	CSI		DEFL	in	(loc)	l/defl	L/d	PLATES	GRIP
TCLL (roof)	20.0	Plate Grip DOL	1.15	TC	0.23	Vert(LL)	0.03	6-7	>999	240	MT20	244/190
Snow (Pf)	20.0	Lumber DOL	1.15	BC	0.23	Vert(CT)	-0.03	6-7	>999	180		
TCDL	10.0	Rep Stress Incr	YES	WB	0.04	Horz(CT)	-0.04	4	n/a	n/a		
BCLL	0.0*	Code	IRC2021/TPI2014	Matrix-MP								
BCDL	10.0										Weight: 20 lb	FT = 20%

LUMBER
TOP CHORD 2x4 SP No.2
BOT CHORD 2x4 SP No.2
WEBS 2x4 SP No.3

BRACING
TOP CHORD Structural wood sheathing directly applied or 4-0-8 oc purlins, except end verticals, and 2-0-0 oc purlins: 3-4.
BOT CHORD Rigid ceiling directly applied or 6-0-0 oc bracing.

REACTIONS (size) 4= Mechanical, 5= Mechanical, 7=0-5-8
Max Horiz 7=100 (LC 14)
Max Uplift 4=-15 (LC 11), 5=-42 (LC 14), 7=-1 (LC 14)
Max Grav 4=85 (LC 37), 5=103 (LC 38), 7=324 (LC 38)

FORCES (lb) - Maximum Compression/Maximum Tension
TOP CHORD 2-7=-261/82, 1-2=0/63, 2-3=-113/60, 3-4=0/0
BOT CHORD 6-7=-6/6, 5-6=0/0
WEBS 3-6=-117/125

NOTES
1) Unbalanced roof live loads have been considered for this design.
2) Wind: ASCE 7-16; Vult=130mph (3-second gust) Vasd=103mph; TCDL=6.0psf; BCDL=6.0psf; h=25ft; Cat. II; Exp B; Enclosed; MWFRS (envelope) exterior zone and C-C Exterior(2E) zone; end vertical left exposed;C-C for members and forces & MWFRS for reactions shown; Lumber DOL=1.60 plate grip DOL=1.60
3) TCLL: ASCE 7-16; Pr=20.0 psf (roof LL: Lum DOL=1.15 Plate DOL=1.15); Pf=20.0 psf (Lum DOL=1.15 Plate DOL=1.15); Is=1.0; Rough Cat B; Fully Exp.; Ce=0.9; Cs=1.00; Ct=1.10
4) Unbalanced snow loads have been considered for this design.
5) This truss has been designed for greater of min roof live load of 12.0 psf or 1.00 times flat roof load of 20.0 psf on overhangs non-concurrent with other live loads.
6) Provide adequate drainage to prevent water ponding.
7) This truss has been designed for a 10.0 psf bottom chord live load nonconcurrent with any other live loads.
8) * This truss has been designed for a live load of 20.0psf on the bottom chord in all areas where a rectangle 3-06-00 tall by 2-00-00 wide will fit between the bottom chord and any other members.
9) Bearings are assumed to be: , Joint 7 User Defined .
10) Refer to girder(s) for truss to truss connections.
11) Provide mechanical connection (by others) of truss to bearing plate capable of withstanding 15 lb uplift at joint 4 and 42 lb uplift at joint 5.
12) One H2.5A Simpson Strong-Tie connectors recommended to connect truss to bearing walls due to UPLIFT at jt(s) 7. This connection is for uplift only and does not consider lateral forces.
13) Graphical purlin representation does not depict the size or the orientation of the purlin along the top and/or bottom chord.

LOAD CASE(S) Standard

March 26,2025

WARNING - Verify design parameters and READ NOTES ON THIS AND INCLUDED MITEK REFERENCE PAGE MII-7473 rev. 1/2/2023 BEFORE USE.
Design valid for use only with MiTek® connectors. This design is based only upon parameters shown, and is for an individual building component, not a truss system. Before use, the building designer must verify the applicability of design parameters and properly incorporate this design into the overall building design. Bracing indicated is to prevent buckling of individual truss web and/or chord members only. Additional temporary and permanent bracing is always required for stability and to prevent collapse with possible personal injury and property damage. For general guidance regarding the fabrication, storage, delivery, erection and bracing of trusses and truss systems, see **ANSI/TPI1 Quality Criteria and DSB-22** available from Truss Plate Institute (www.tpinst.org) and **BCSI Building Component Safety Information** available from the Structural Building Component Association (www.sbcacomponents.com)

ENGINEERING BY TRENCO A MiTek Affiliate
818 Soundside Road
Edenton, NC 27932

Job	Truss	Truss Type	Qty	Ply	1004 Serenity-Roof-328 A CP GLH
25030123-01	VLC1	Valley	1	1	I72264678 Job Reference (optional)

Carter Components (Sanford, NC), Sanford, NC - 27332, Run: 8.73 S Feb 19 2025 Print: 8.730 S Feb 19 2025 MiTek Industries, Inc. Tue Mar 25 09:15:27 Page: 1
ID:MUJwr2X04VK7oB8VeTRuFYyzBGG-RfC?PsB70Hq3NSgPqnL8w3uITXbGKWrCDoi7J4zJC?f

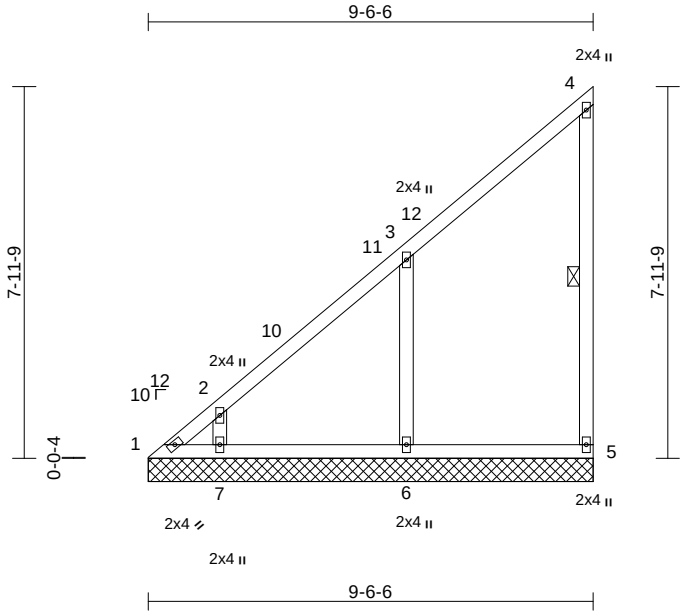

Scale = 1:49.4

Loading	(psf)	Spacing	2-0-0	CSI		DEFL	in	(loc)	l/defl	L/d	PLATES	GRIP
TCLL (roof)	20.0	Plate Grip DOL	1.15	TC	0.31	Vert(LL)	n/a	-	n/a	999	MT20	244/190
Snow (Pf)	20.0	Lumber DOL	1.15	BC	0.17	Vert(TL)	n/a	-	n/a	999		
TCDL	10.0	Rep Stress Incr	YES	WB	0.15	Horiz(TL)	0.00	7	n/a	n/a		
BCLL	0.0*	Code	IRC2021/TPI2014	Matrix-MSH								
BCDL	10.0										Weight: 50 lb	FT = 20%

LUMBER
TOP CHORD 2x4 SP No.2
BOT CHORD 2x4 SP No.2
WEBS 2x4 SP No.3
OTHERS 2x4 SP No.3

BRACING
TOP CHORD Structural wood sheathing directly applied or 6-0-0 oc purlins, except end verticals.
BOT CHORD Rigid ceiling directly applied or 10-0-0 oc bracing.
WEBS 1 Row at midpt 4-5

REACTIONS (size) 1=9-6-6, 5=9-6-6, 6=9-6-6, 7=9-6-6
Max Horiz 1=249 (LC 14)
Max Uplift 1=-63 (LC 12), 5=-30 (LC 16), 6=-134 (LC 14), 7=-100 (LC 14)
Max Grav 1=179 (LC 14), 5=218 (LC 5), 6=508 (LC 5), 7=308 (LC 24)

FORCES (lb) - Maximum Compression/Maximum Tension
TOP CHORD 1-2=-433/212, 2-3=-317/158, 3-4=-156/83, 4-5=-171/114
BOT CHORD 1-7=-51/14, 6-7=-3/5, 5-6=-3/5
WEBS 3-6=-393/289, 2-7=-253/183

NOTES
1) Wind: ASCE 7-16; Vult=130mph (3-second gust) Vasd=103mph; TCDL=6.0psf; BCDL=6.0psf; h=25ft; Cat. II; Exp B; Enclosed; MWFRS (envelope) exterior zone and C-C Exterior(2E) 0-0-5 to 3-0-5, Interior (1) 3-0-5 to 5-2-1, Exterior(2R) 5-2-1 to 9-4-15 zone;C-C for members and forces & MWFRS for reactions shown; Lumber DOL=1.60 plate grip DOL=1.60
2) Truss designed for wind loads in the plane of the truss only. For studs exposed to wind (normal to the face), see Standard Industry Gable End Details as applicable, or consult qualified building designer as per ANSI/TPI 1.
3) TCLL: ASCE 7-16; Pr=20.0 psf (roof LL: Lum DOL=1.15 Plate DOL=1.15); Pf=20.0 psf (Lum DOL=1.15 Plate DOL=1.15); Is=1.0; Rough Cat B; Fully Exp.; Ce=0.9; Cs=1.00; Ct=1.10
4) Unbalanced snow loads have been considered for this design.
5) Gable requires continuous bottom chord bearing.
6) Gable studs spaced at 4-0-0 oc.
7) This truss has been designed for a 10.0 psf bottom chord live load nonconcurrent with any other live loads.
8) * This truss has been designed for a live load of 20.0psf on the bottom chord in all areas where a rectangle 3-06-00 tall by 2-00-00 wide will fit between the bottom chord and any other members, with BCDL = 10.0psf.
9) Provide mechanical connection (by others) of truss to bearing plate capable of withstanding 63 lb uplift at joint 1, 30 lb uplift at joint 5, 134 lb uplift at joint 6 and 100 lb uplift at joint 7.

LOAD CASE(S) Standard

March 26,2025

WARNING - Verify design parameters and READ NOTES ON THIS AND INCLUDED MITEK REFERENCE PAGE MII-7473 rev. 1/2/2023 BEFORE USE.
Design valid for use only with MiTek® connectors. This design is based only upon parameters shown, and is for an individual building component, not a truss system. Before use, the building designer must verify the applicability of design parameters and properly incorporate this design into the overall building design. Bracing indicated is to prevent buckling of individual truss web and/or chord members only. Additional temporary and permanent bracing is always required for stability and to prevent collapse with possible personal injury and property damage. For general guidance regarding the fabrication, storage, delivery, erection and bracing of trusses and truss systems, see **ANSI/TPI1 Quality Criteria and DSB-22** available from Truss Plate Institute (www.tpinst.org) and **BCSI Building Component Safety Information** available from the Structural Building Component Association (www.sbcacomponents.com)

ENGINEERING BY TRENCO A MiTek Affiliate
818 Soundside Road
Edenton, NC 27932

Job	Truss	Truss Type	Qty	Ply	1004 Serenity-Roof-328 A CP GLH
25030123-01	VLC2	Valley	1	1	I72264679 Job Reference (optional)

Carter Components (Sanford, NC), Sanford, NC - 27332, Run: 8.73 S Feb 19 2025 Print: 8.730 S Feb 19 2025 MiTek Industries, Inc. Tue Mar 25 09:15:27 Page: 1
ID:BehB56cngL4GW6cf?kYJVpyzBGA-RfC?PsB70Hq3NSgPqnL8w3uITXbGKWrCDoi7J4zJC?f

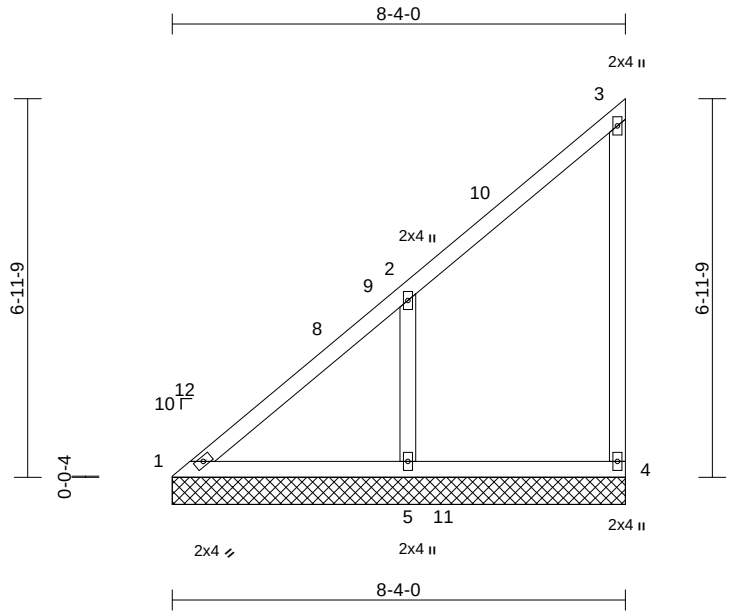

Scale = 1:42.4

Loading	(psf)	Spacing	2-0-0	CSI		DEFL	in	(loc)	l/defl	L/d	PLATES	GRIP
TCLL (roof)	20.0	Plate Grip DOL	1.15	TC	0.35	Vert(LL)	n/a	-	n/a	999	MT20	244/190
Snow (Pf)	20.0	Lumber DOL	1.15	BC	0.20	Vert(TL)	n/a	-	n/a	999		
TCDL	10.0	Rep Stress Incr	YES	WB	0.11	Horiz(TL)	0.00	4	n/a	n/a		
BCLL	0.0*	Code	IRC2021/TPI2014	Matrix-MP								
BCDL	10.0										Weight: 42 lb	FT = 20%

LUMBER

TOP CHORD	2x4 SP No.2
BOT CHORD	2x4 SP No.2
WEBS	2x4 SP No.3
OTHERS	2x4 SP No.3

BRACING

TOP CHORD	Structural wood sheathing directly applied or 6-0-0 oc purlins, except end verticals.
BOT CHORD	Rigid ceiling directly applied or 10-0-0 oc bracing.

REACTIONS (size) 1=8-4-0, 4=8-4-0, 5=8-4-0
Max Horiz 1=224 (LC 14)
Max Uplift 4=-29 (LC 16), 5=-165 (LC 14)
Max Grav 1=165 (LC 26), 4=201 (LC 5), 5=554 (LC 5)

FORCES (lb) - Maximum Compression/Maximum Tension

TOP CHORD	1-2=-337/179, 2-3=-157/78, 3-4=-163/119
BOT CHORD	1-5=-96/162, 4-5=0/0
WEBS	2-5=-420/319

NOTES

1) Wind: ASCE 7-16; Vult=130mph (3-second gust) Vasd=103mph; TCDL=6.0psf; BCDL=6.0psf; h=25ft; Cat. II; Exp B; Enclosed; MWFRS (envelope) exterior zone and C-C Exterior(2E) 0-0-5 to 3-0-5, Interior (1) 3-0-5 to 3-11-10, Exterior(2R) 3-11-10 to 8-2-9 zone;C-C for members and forces & MWFRS for reactions shown; Lumber DOL=1.60 plate grip DOL=1.60
2) Truss designed for wind loads in the plane of the truss only. For studs exposed to wind (normal to the face), see Standard Industry Gable End Details as applicable, or consult qualified building designer as per ANSI/TPI 1.
3) TCLL: ASCE 7-16; Pr=20.0 psf (roof LL: Lum DOL=1.15 Plate DOL=1.15); Pf=20.0 psf (Lum DOL=1.15 Plate DOL=1.15); Is=1.0; Rough Cat B; Fully Exp.; Ce=0.9; Cs=1.00; Ct=1.10
4) Unbalanced snow loads have been considered for this design.
5) Gable requires continuous bottom chord bearing.
6) Gable studs spaced at 4-0-0 oc.
7) This truss has been designed for a 10.0 psf bottom chord live load nonconcurrent with any other live loads.
8) * This truss has been designed for a live load of 20.0psf on the bottom chord in all areas where a rectangle 3-06-00 tall by 2-00-00 wide will fit between the bottom chord and any other members, with BCDL = 10.0psf.
9) Provide mechanical connection (by others) of truss to bearing plate capable of withstanding 29 lb uplift at joint 4 and 165 lb uplift at joint 5.

LOAD CASE(S) Standard

March 26,2025

WARNING - Verify design parameters and READ NOTES ON THIS AND INCLUDED MITEK REFERENCE PAGE MII-7473 rev. 1/2/2023 BEFORE USE.
Design valid for use only with MiTek® connectors. This design is based only upon parameters shown, and is for an individual building component, not a truss system. Before use, the building designer must verify the applicability of design parameters and properly incorporate this design into the overall building design. Bracing indicated is to prevent buckling of individual truss web and/or chord members only. Additional temporary and permanent bracing is always required for stability and to prevent collapse with possible personal injury and property damage. For general guidance regarding the fabrication, storage, delivery, erection and bracing of trusses and truss systems, see **ANSI/TPI1 Quality Criteria and DSB-22** available from Truss Plate Institute (www.tpinst.org) and **BCSI Building Component Safety Information** available from the Structural Building Component Association (www.sbcacomponents.com)

ENGINEERING BY TRENCO A MiTek Affiliate
818 Soundside Road
Edenton, NC 27932

Job	Truss	Truss Type	Qty	Ply	1004 Serenity-Roof-328 A CP GLH
25030123-01	VLC3	Valley	1	1	I72264680 Job Reference (optional)

Carter Components (Sanford, NC), Sanford, NC - 27332, Run: 8.73 S Feb 19 2025 Print: 8.730 S Feb 19 2025 MiTek Industries, Inc. Tue Mar 25 09:15:28 Page: 1
ID:0o2TM9gXFBrQE13pL?fjk4yzBG4-RfC?PsB70Hq3NSgPqnL8w3uITXbGKWrCDoi7J4zJC?f

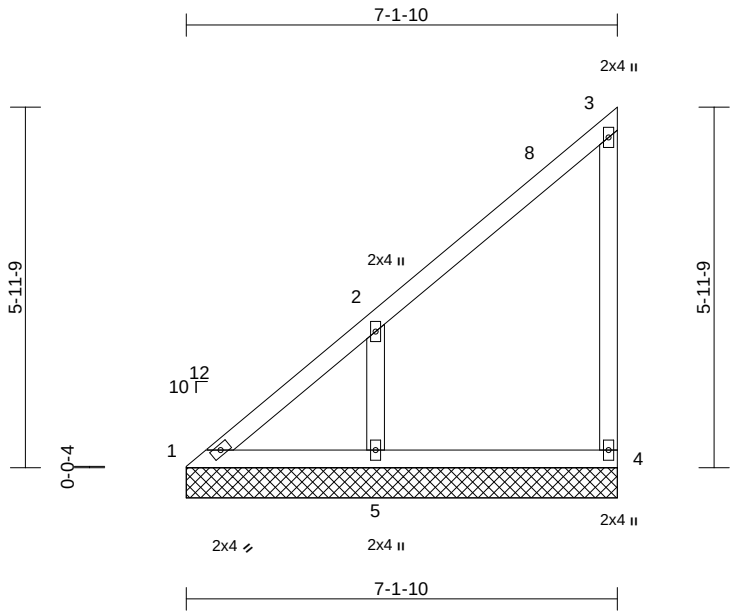

Scale = 1:38.1

Loading	(psf)	Spacing	2-0-0	CSI		DEFL	in	(loc)	l/defl	L/d	PLATES	GRIP
TCLL (roof)	20.0	Plate Grip DOL	1.15	TC	0.36	Vert(LL)	n/a	-	n/a	999	MT20	244/190
Snow (Pf)	20.0	Lumber DOL	1.15	BC	0.12	Vert(TL)	n/a	-	n/a	999		
TCDL	10.0	Rep Stress Incr	YES	WB	0.09	Horiz(TL)	0.00	4	n/a	n/a		
BCLL	0.0*	Code	IRC2021/TPI2014	Matrix-MP								
BCDL	10.0										Weight: 35 lb	FT = 20%

LUMBER

TOP CHORD	2x4 SP No.2
BOT CHORD	2x4 SP No.2
WEBS	2x4 SP No.3
OTHERS	2x4 SP No.3

BRACING

TOP CHORD	Structural wood sheathing directly applied or 6-0-0 oc purlins, except end verticals.
BOT CHORD	Rigid ceiling directly applied or 10-0-0 oc bracing.

REACTIONS (size) 1=7-1-10, 4=7-1-10, 5=7-1-10
Max Horiz 1=198 (LC 14)
Max Uplift 4=-44 (LC 14), 5=-149 (LC 14)
Max Grav 1=121 (LC 26), 4=198 (LC 20), 5=467 (LC 20)

FORCES (lb) - Maximum Compression/Maximum Tension

TOP CHORD	1-2=-303/163, 2-3=-154/81, 3-4=-167/112
BOT CHORD	1-5=-73/91, 4-5=0/0
WEBS	2-5=-383/290

NOTES

1) Wind: ASCE 7-16; Vult=130mph (3-second gust) Vasd=103mph; TCDL=6.0psf; BCDL=6.0psf; h=25ft; Cat. II; Exp B; Enclosed; MWFRS (envelope) exterior zone and C-C Exterior(2E) zone;C-C for members and forces & MWFRS for reactions shown; Lumber DOL=1.60 plate grip DOL=1.60
2) Truss designed for wind loads in the plane of the truss only. For studs exposed to wind (normal to the face), see Standard Industry Gable End Details as applicable, or consult qualified building designer as per ANSI/TPI 1.
3) TCLL: ASCE 7-16; Pr=20.0 psf (roof LL: Lum DOL=1.15 Plate DOL=1.15); Pf=20.0 psf (Lum DOL=1.15 Plate DOL=1.15); Is=1.0; Rough Cat B; Fully Exp.; Ce=0.9; Cs=1.00; Ct=1.10
4) Unbalanced snow loads have been considered for this design.
5) Gable requires continuous bottom chord bearing.
6) Gable studs spaced at 4-0-0 oc.
7) This truss has been designed for a 10.0 psf bottom chord live load nonconcurrent with any other live loads.
8) * This truss has been designed for a live load of 20.0psf on the bottom chord in all areas where a rectangle 3-06-00 tall by 2-00-00 wide will fit between the bottom chord and any other members.
9) Provide mechanical connection (by others) of truss to bearing plate capable of withstanding 44 lb uplift at joint 4 and 149 lb uplift at joint 5.

LOAD CASE(S) Standard

March 26,2025

WARNING - Verify design parameters and READ NOTES ON THIS AND INCLUDED MITEK REFERENCE PAGE MII-7473 rev. 1/2/2023 BEFORE USE.
Design valid for use only with MiTek® connectors. This design is based only upon parameters shown, and is for an individual building component, not a truss system. Before use, the building designer must verify the applicability of design parameters and properly incorporate this design into the overall building design. Bracing indicated is to prevent buckling of individual truss web and/or chord members only. Additional temporary and permanent bracing is always required for stability and to prevent collapse with possible personal injury and property damage. For general guidance regarding the fabrication, storage, delivery, erection and bracing of trusses and truss systems, see **ANSI/TPI1 Quality Criteria and DSB-22** available from Truss Plate Institute (www.tpinst.org) and **BCSI Building Component Safety Information** available from the Structural Building Component Association (www.sbcacomponents.com)

ENGINEERING BY TRENCO A MiTek Affiliate
818 Soundside Road
Edenton, NC 27932

Job	Truss	Truss Type	Qty	Ply	1004 Serenity-Roof-328 A CP GLH
25030123-01	VLC4	Valley	1	1	I72264681 Job Reference (optional)

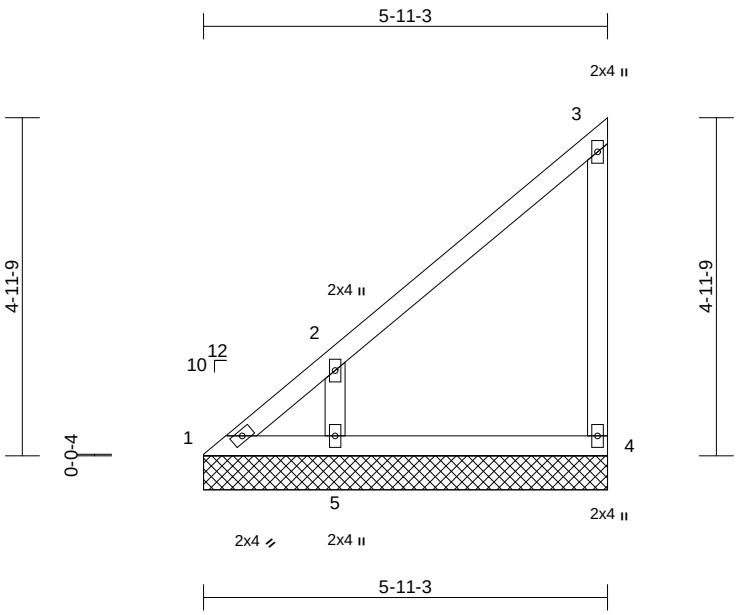

Scale = 1:33.8

Loading	(psf)	Spacing	2-0-0	CSI		DEFL	in	(loc)	l/defl	L/d	PLATES	GRIP
TCLL (roof)	20.0	Plate Grip DOL	1.15	TC	0.34	Vert(LL)	n/a	-	n/a	999	MT20	244/190
Snow (Pf)	20.0	Lumber DOL	1.15	BC	0.12	Vert(TL)	n/a	-	n/a	999		
TCDL	10.0	Rep Stress Incr	YES	WB	0.10	Horiz(TL)	0.00	4	n/a	n/a		
BCLL	0.0*	Code	IRC2021/TPI2014	Matrix-MP								
BCDL	10.0										Weight: 28 lb	FT = 20%

LUMBER

TOP CHORD	2x4 SP No.2
BOT CHORD	2x4 SP No.2
WEBS	2x4 SP No.3
OTHERS	2x4 SP No.3

BRACING

TOP CHORD	Structural wood sheathing directly applied or 5-11-3 oc purlins, except end verticals.
BOT CHORD	Rigid ceiling directly applied or 10-0-0 oc bracing.

REACTIONS (size) 1=5-11-3, 4=5-11-3, 5=5-11-3
Max Horiz 1=171 (LC 14)
Max Uplift 1=-31 (LC 12), 4=-61 (LC 14), 5=-133 (LC 14)
Max Grav 1=120 (LC 14), 4=199 (LC 20), 5=450 (LC 20)

FORCES (lb) - Maximum Compression/Maximum Tension
TOP CHORD 1-2=-330/170, 2-3=-155/80, 3-4=-165/124
BOT CHORD 1-5=-34/11, 4-5=0/0
WEBS 2-5=-414/331

NOTES

1) Wind: ASCE 7-16; Vult=130mph (3-second gust) Vasd=103mph; TCDL=6.0psf; BCDL=6.0psf; h=25ft; Cat. II; Exp B; Enclosed; MWFRS (envelope) exterior zone and C-C Exterior(2E) zone;C-C for members and forces & MWFRS for reactions shown; Lumber DOL=1.60 plate grip DOL=1.60
2) Truss designed for wind loads in the plane of the truss only. For studs exposed to wind (normal to the face), see Standard Industry Gable End Details as applicable, or consult qualified building designer as per ANSI/TPI 1.
3) TCLL: ASCE 7-16; Pr=20.0 psf (roof LL: Lum DOL=1.15 Plate DOL=1.15); Pf=20.0 psf (Lum DOL=1.15 Plate DOL=1.15); Is=1.0; Rough Cat B; Fully Exp.; Ce=0.9; Cs=1.00; Ct=1.10
4) Unbalanced snow loads have been considered for this design.
5) Gable requires continuous bottom chord bearing.
6) Gable studs spaced at 4-0-0 oc.
7) This truss has been designed for a 10.0 psf bottom chord live load nonconcurrent with any other live loads.
8) * This truss has been designed for a live load of 20.0psf on the bottom chord in all areas where a rectangle 3-06-00 tall by 2-00-00 wide will fit between the bottom chord and any other members.
9) Provide mechanical connection (by others) of truss to bearing plate capable of withstanding 61 lb uplift at joint 4, 31 lb uplift at joint 1 and 133 lb uplift at joint 5.

LOAD CASE(S) Standard

March 26,2025

WARNING - Verify design parameters and READ NOTES ON THIS AND INCLUDED MITEK REFERENCE PAGE MII-7473 rev. 1/2/2023 BEFORE USE.
Design valid for use only with MiTek® connectors. This design is based only upon parameters shown, and is for an individual building component, not a truss system. Before use, the building designer must verify the applicability of design parameters and properly incorporate this design into the overall building design. Bracing indicated is to prevent buckling of individual truss web and/or chord members only. Additional temporary and permanent bracing is always required for stability and to prevent collapse with possible personal injury and property damage. For general guidance regarding the fabrication, storage, delivery, erection and bracing of trusses and truss systems, see **ANSI/TPI1 Quality Criteria and DSB-22** available from Truss Plate Institute (www.tpinst.org) and **BCSI Building Component Safety Information** available from the Structural Building Component Association (www.sbcacomponents.com)

ENGINEERING BY TRENCO A MiTek Affiliate
818 Soundside Road
Edenton, NC 27932

Job	Truss	Truss Type	Qty	Ply	1004 Serenity-Roof-328 A CP GLH
25030123-01	VLC5	Valley	1	1	I72264682 Job Reference (optional)

Carter Components (Sanford, NC), Sanford, NC - 27332,

Run: 8.73 S Feb 19 2025 Print: 8.730 S Feb 19 2025 MiTek Industries, Inc. Tue Mar 25 09:15:28 Page: 1
ID:f6m?tGq3QtLjgt_72WsXDcyzBFu-RfC?PsB70Hq3NSgPqnL8w3uITXbGKWrCDoi7J4zJC?f

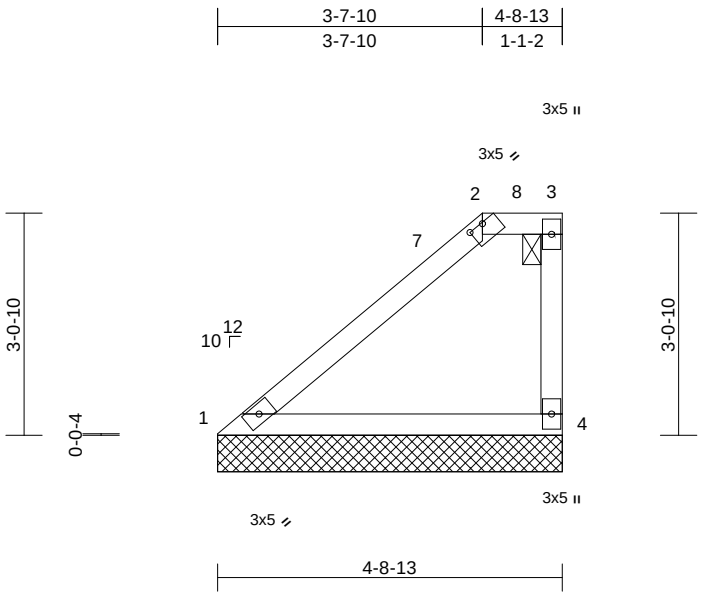

Scale = 1:31.6

Plate Offsets (X, Y): [2:0-2-8,0-0-3]

Loading	(psf)	Spacing	2-0-0	CSI		DEFL	in	(loc)	l/defl	L/d	PLATES	GRIP
TCLL (roof)	20.0	Plate Grip DOL	1.15	TC	0.52	Vert(LL)	n/a	-	n/a	999	MT20	244/190
Snow (Pf)	20.0	Lumber DOL	1.15	BC	0.34	Vert(TL)	n/a	-	n/a	999		
TCDL	10.0	Rep Stress Incr	YES	WB	0.00	Horiz(TL)	0.01	4	n/a	n/a		
BCLL	0.0*	Code	IRC2021/TPI2014	Matrix-MR								
BCDL	10.0										Weight: 19 lb	FT = 20%

LUMBER
TOP CHORD 2x4 SP No.2
BOT CHORD 2x4 SP No.2
WEBS 2x4 SP No.3

BRACING
TOP CHORD Structural wood sheathing directly applied or 4-8-13 oc purlins, except end verticals, and 2-0-0 oc purlins: 2-3.
BOT CHORD Rigid ceiling directly applied or 10-0-0 oc bracing.

REACTIONS (size) 1=4-8-13, 4=4-8-13
Max Horiz 1=107 (LC 14)
Max Uplift 4=-56 (LC 14)
Max Grav 1=261 (LC 37), 4=212 (LC 37)

FORCES (lb) - Maximum Compression/Maximum Tension
TOP CHORD 1-2=-322/1, 2-3=-85/49, 3-4=-139/117
BOT CHORD 1-4=-162/278

NOTES
1) Wind: ASCE 7-16; Vult=130mph (3-second gust) Vasd=103mph; TCDL=6.0psf; BCDL=6.0psf; h=25ft; Cat. II; Exp B; Enclosed; MWFRS (envelope) exterior zone and C-C Exterior(2E) 0-0-5 to 3-0-5, Exterior(2R) 3-0-5 to 3-7-15, Exterior(2E) 3-7-15 to 4-7-6 zone;C-C for members and forces & MWFRS for reactions shown; Lumber DOL=1.60 plate grip DOL=1.60
2) Truss designed for wind loads in the plane of the truss only. For studs exposed to wind (normal to the face), see Standard Industry Gable End Details as applicable, or consult qualified building designer as per ANSI/TPI 1.
3) TCLL: ASCE 7-16; Pr=20.0 psf (roof LL: Lum DOL=1.15 Plate DOL=1.15); Pf=20.0 psf (Lum DOL=1.15 Plate DOL=1.15); Is=1.0; Rough Cat B; Fully Exp.; Ce=0.9; Cs=1.00; Ct=1.10
4) Unbalanced snow loads have been considered for this design.
5) Provide adequate drainage to prevent water ponding.
6) Gable requires continuous bottom chord bearing.
7) Gable studs spaced at 4-0-0 oc.
8) This truss has been designed for a 10.0 psf bottom chord live load nonconcurrent with any other live loads.
9) * This truss has been designed for a live load of 20.0psf on the bottom chord in all areas where a rectangle 3-06-00 tall by 2-00-00 wide will fit between the bottom chord and any other members.
10) Provide mechanical connection (by others) of truss to bearing plate capable of withstanding 56 lb uplift at joint 4.
11) Graphical purlin representation does not depict the size or the orientation of the purlin along the top and/or bottom chord.

LOAD CASE(S) Standard

March 26,2025

WARNING - Verify design parameters and READ NOTES ON THIS AND INCLUDED MITEK REFERENCE PAGE MII-7473 rev. 1/2/2023 BEFORE USE.
Design valid for use only with MiTek® connectors. This design is based only upon parameters shown, and is for an individual building component, not a truss system. Before use, the building designer must verify the applicability of design parameters and properly incorporate this design into the overall building design. Bracing indicated is to prevent buckling of individual truss web and/or chord members only. Additional temporary and permanent bracing is always required for stability and to prevent collapse with possible personal injury and property damage. For general guidance regarding the fabrication, storage, delivery, erection and bracing of trusses and truss systems, see **ANSI/TPI1 Quality Criteria and DSB-22** available from Truss Plate Institute (www.tpinst.org) and **BCSI Building Component Safety Information** available from the Structural Building Component Association (www.sbcacomponents.com)

ENGINEERING BY TRENCO A MiTek Affiliate
818 Soundside Road
Edenton, NC 27932

Job	Truss	Truss Type	Qty	Ply	1004 Serenity-Roof-328 A CP GLH
25030123-01	VLE1	Valley	1	1	I72264683 Job Reference (optional)

Carter Components (Sanford, NC), Sanford, NC - 27332,

Run: 8.73 S Feb 19 2025 Print: 8.730 S Feb 19 2025 MiTek Industries, Inc. Tue Mar 25 09:15:28 Page: 1
ID:DTBTk2iEBbrKjDFXxKE1mCyzBJw-RfC?PsB70Hq3NSgPqnL8w3uITXbGKWrCDoi7J4zJC?f

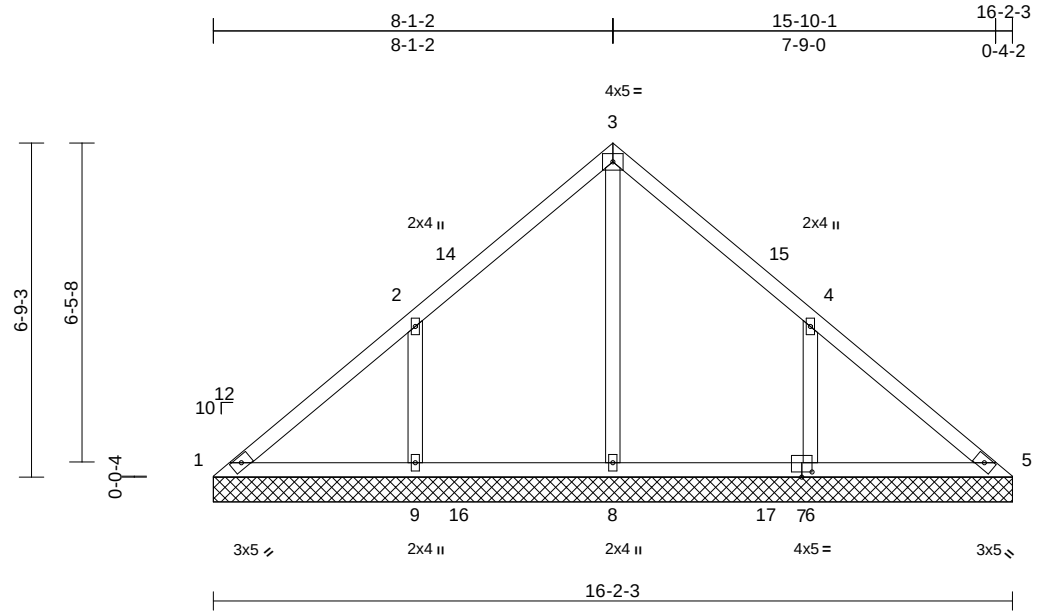

Scale = 1:46.7

Plate Offsets (X, Y): [7:0-2-8,0-1-4]

Loading	(psf)	Spacing	2-0-0	CSI		DEFL	in	(loc)	l/defl	L/d	PLATES	GRIP
TCLL (roof)	20.0	Plate Grip DOL	1.15	TC	0.33	Vert(LL)	n/a	-	n/a	999	MT20	244/190
Snow (Pf)	20.0	Lumber DOL	1.15	BC	0.16	Vert(TL)	n/a	-	n/a	999		
TCDL	10.0	Rep Stress Incr	YES	WB	0.22	Horiz(TL)	0.00	5	n/a	n/a		
BCLL	0.0*	Code	IRC2021/TPI2014	Matrix-MSH								
BCDL	10.0										Weight: 72 lb	FT = 20%

LUMBER
TOP CHORD 2x4 SP No.2
BOT CHORD 2x4 SP No.2
OTHERS 2x4 SP No.3

BRACING
TOP CHORD Structural wood sheathing directly applied or 6-0-0 oc purlins.
BOT CHORD Rigid ceiling directly applied or 6-0-0 oc bracing.

REACTIONS (size) 1=16-2-3, 5=16-2-3, 6=16-2-3, 8=16-2-3, 9=16-2-3
Max Horiz 1=-154 (LC 10)
Max Uplift 1=-22 (LC 10), 6=-174 (LC 15), 9=-177 (LC 14)
Max Grav 1=126 (LC 25), 5=105 (LC 21), 6=496 (LC 6), 8=468 (LC 24), 9=496 (LC 5)

FORCES (lb) - Maximum Compression/Maximum Tension
TOP CHORD 1-2=-149/216, 2-3=-131/167, 3-4=-131/146, 4-5=-123/175
BOT CHORD 1-9=-102/134, 8-9=-102/125, 6-8=-102/125, 5-6=-102/125
WEBS 3-8=-279/0, 2-9=-387/212, 4-6=-387/211

NOTES
1) Unbalanced roof live loads have been considered for this design.
2) Wind: ASCE 7-16; Vult=130mph (3-second gust) Vasd=103mph; TCDL=6.0psf; BCDL=6.0psf; h=25ft; Cat. II; Exp B; Enclosed; MWFRS (envelope) exterior zone and C-C Exterior(2E) 0-0-5 to 3-0-5, Interior (1) 3-0-5 to 5-1-6, Exterior(2R) 5-1-6 to 11-1-6, Interior (1) 11-1-6 to 13-2-8, Exterior(2E) 13-2-8 to 16-2-8 zone; cantilever left and right exposed ; end vertical left and right exposed;C-C for members and forces & MWFRS for reactions shown; Lumber DOL=1.60 plate grip DOL=1.60
3) Truss designed for wind loads in the plane of the truss only. For studs exposed to wind (normal to the face), see Standard Industry Gable End Details as applicable, or consult qualified building designer as per ANSI/TPI 1.
4) TCLL: ASCE 7-16; Pr=20.0 psf (roof LL: Lum DOL=1.15 Plate DOL=1.15); Pf=20.0 psf (Lum DOL=1.15 Plate DOL=1.15); Is=1.0; Rough Cat B; Fully Exp.; Ce=0.9; Cs=1.00; Ct=1.10
5) Unbalanced snow loads have been considered for this design.
6) Gable requires continuous bottom chord bearing.
7) Gable studs spaced at 4-0-0 oc.
8) This truss has been designed for a 10.0 psf bottom chord live load nonconcurrent with any other live loads.
9) * This truss has been designed for a live load of 20.0psf on the bottom chord in all areas where a rectangle 3-06-00 tall by 2-00-00 wide will fit between the bottom chord and any other members, with BCDL = 10.0psf.
10) Provide mechanical connection (by others) of truss to bearing plate capable of withstanding 22 lb uplift at joint 1, 177 lb uplift at joint 9 and 174 lb uplift at joint 6.

LOAD CASE(S) Standard

March 26,2025

WARNING - Verify design parameters and READ NOTES ON THIS AND INCLUDED MITEK REFERENCE PAGE MII-7473 rev. 1/2/2023 BEFORE USE.
Design valid for use only with MiTek® connectors. This design is based only upon parameters shown, and is for an individual building component, not a truss system. Before use, the building designer must verify the applicability of design parameters and properly incorporate this design into the overall building design. Bracing indicated is to prevent buckling of individual truss web and/or chord members only. Additional temporary and permanent bracing is always required for stability and to prevent collapse with possible personal injury and property damage. For general guidance regarding the fabrication, storage, delivery, erection and bracing of trusses and truss systems, see **ANSI/TPI1 Quality Criteria and DSB-22** available from Truss Plate Institute (www.tpinst.org) and **BCSI Building Component Safety Information** available from the Structural Building Component Association (www.sbcacomponents.com)

ENGINEERING BY TRENCO A MiTek Affiliate
818 Soundside Road
Edenton, NC 27932

Job	Truss	Truss Type	Qty	Ply	1004 Serenity-Roof-328 A CP GLH
25030123-01	VLE2	Valley	1	1	I72264684 Job Reference (optional)

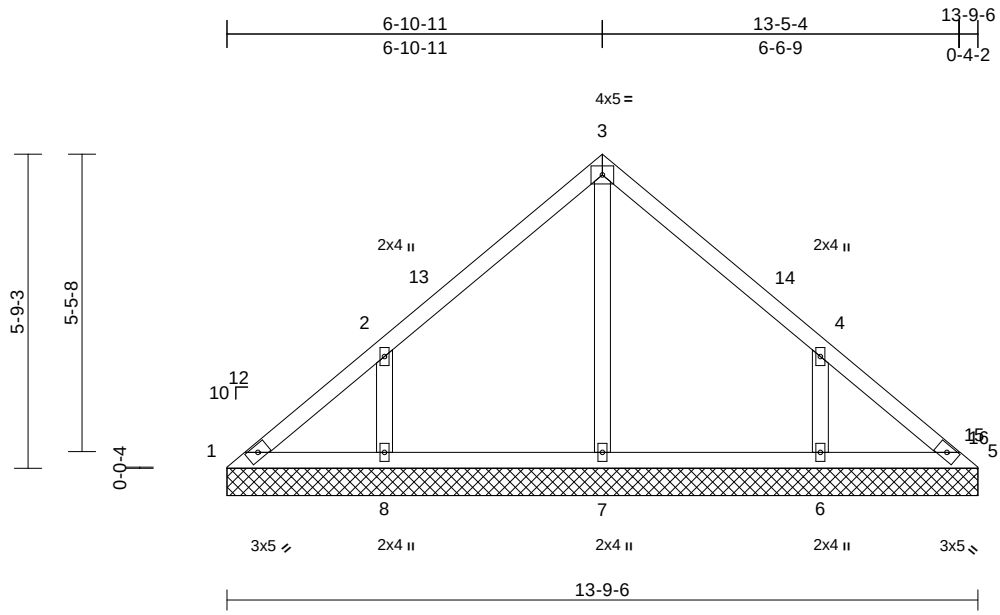

Scale = 1:42.3

Loading	(psf)	Spacing	2-0-0	CSI		DEFL	in	(loc)	l/defl	L/d	PLATES	GRIP
TCLL (roof)	20.0	Plate Grip DOL	1.15	TC	0.33	Vert(LL)	n/a	-	n/a	999	MT20	244/190
Snow (Pf)	20.0	Lumber DOL	1.15	BC	0.11	Vert(TL)	n/a	-	n/a	999		
TCDL	10.0	Rep Stress Incr	YES	WB	0.12	Horiz(TL)	0.00	5	n/a	n/a		
BCLL	0.0*	Code	IRC2021/TPI2014	Matrix-MSH								
BCDL	10.0										Weight: 59 lb	FT = 20%

LUMBER
TOP CHORD 2x4 SP No.2
BOT CHORD 2x4 SP No.2
OTHERS 2x4 SP No.3

BRACING
TOP CHORD Structural wood sheathing directly applied or 6-0-0 oc purlins.
BOT CHORD Rigid ceiling directly applied or 6-0-0 oc bracing.

REACTIONS (size) 1=13-9-6, 5=13-9-6, 6=13-9-6, 7=13-9-6, 8=13-9-6
Max Horiz 1=130 (LC 11)
Max Uplift 1=-25 (LC 10), 6=-147 (LC 15), 8=-151 (LC 14)
Max Grav 1=115 (LC 25), 5=77 (LC 29), 6=443 (LC 21), 7=288 (LC 20), 8=445 (LC 20)

FORCES (lb) - Maximum Compression/Maximum Tension
TOP CHORD 1-2=-143/120, 2-3=-191/114, 3-4=-191/112, 4-5=-103/83
BOT CHORD 1-8=-47/113, 7-8=-47/85, 6-7=-47/85, 5-6=-47/85
WEBS 3-7=-206/0, 2-8=-374/193, 4-6=-374/191

NOTES
1) Unbalanced roof live loads have been considered for this design.
2) Wind: ASCE 7-16; Vult=130mph (3-second gust) Vasd=103mph; TCDL=6.0psf; BCDL=6.0psf; h=25ft; Cat. II; Exp B; Enclosed; MWFRS (envelope) exterior zone and C-C Exterior(2E) 0-0-5 to 2-11-0, Interior (1) 2-11-0 to 3-11-0, Exterior(2R) 3-11-0 to 9-11-0, Interior (1) 9-11-0 to 10-5-3, Exterior(2E) 10-5-3 to 13-5-3 zone; cantilever left and right exposed ; end vertical left and right exposed;C-C for members and forces & MWFRS for reactions shown; Lumber DOL=1.60 plate grip DOL=1.60
3) Truss designed for wind loads in the plane of the truss only. For studs exposed to wind (normal to the face), see Standard Industry Gable End Details as applicable, or consult qualified building designer as per ANSI/TPI 1.
4) TCLL: ASCE 7-16; Pr=20.0 psf (roof LL: Lum DOL=1.15 Plate DOL=1.15); Pf=20.0 psf (Lum DOL=1.15 Plate DOL=1.15); Is=1.0; Rough Cat B; Fully Exp.; Ce=0.9; Cs=1.00; Ct=1.10
5) Unbalanced snow loads have been considered for this design.
6) Gable requires continuous bottom chord bearing.
7) Gable studs spaced at 4-0-0 oc.
8) This truss has been designed for a 10.0 psf bottom chord live load nonconcurrent with any other live loads.
9) * This truss has been designed for a live load of 20.0psf on the bottom chord in all areas where a rectangle 3-06-00 tall by 2-00-00 wide will fit between the bottom chord and any other members.
10) Provide mechanical connection (by others) of truss to bearing plate capable of withstanding 25 lb uplift at joint 1, 151 lb uplift at joint 8 and 147 lb uplift at joint 6.

LOAD CASE(S) Standard

March 26,2025

WARNING - Verify design parameters and READ NOTES ON THIS AND INCLUDED MITEK REFERENCE PAGE MII-7473 rev. 1/2/2023 BEFORE USE.
Design valid for use only with MiTek® connectors. This design is based only upon parameters shown, and is for an individual building component, not a truss system. Before use, the building designer must verify the applicability of design parameters and properly incorporate this design into the overall building design. Bracing indicated is to prevent buckling of individual truss web and/or chord members only. Additional temporary and permanent bracing is always required for stability and to prevent collapse with possible personal injury and property damage. For general guidance regarding the fabrication, storage, delivery, erection and bracing of trusses and truss systems, see **ANSI/TPI1 Quality Criteria and DSB-22** available from Truss Plate Institute (www.tpinst.org) and **BCSI Building Component Safety Information** available from the Structural Building Component Association (www.sbcacomponents.com)

ENGINEERING BY TRENCO A MiTek Affiliate
818 Soundside Road
Edenton, NC 27932

Job	Truss	Truss Type	Qty	Ply	1004 Serenity-Roof-328 A CP GLH
25030123-01	VLE3	Valley	1	1	I72264685 Job Reference (optional)

Carter Components (Sanford, NC), Sanford, NC - 27332, Run: 8.73 S Feb 19 2025 Print: 8.730 S Feb 19 2025 MiTek Industries, Inc. Tue Mar 25 09:15:28 Page: 1
ID:XFryJlebWm?dvpUHJx6YFyyzBHQ-RfC?PsB70Hq3NSgPqnL8w3uITXbGKWrCDoi7J4zJC?f

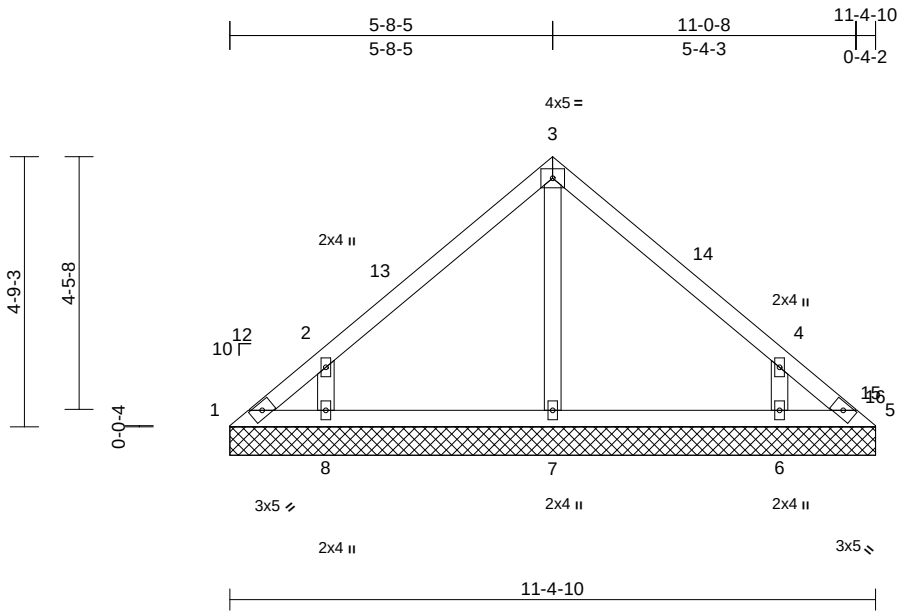

Scale = 1:40.6

Loading	(psf)	Spacing	2-0-0	CSI		DEFL	in	(loc)	l/defl	L/d	PLATES	GRIP
TCLL (roof)	20.0	Plate Grip DOL	1.15	TC	0.32	Vert(LL)	n/a	-	n/a	999	MT20	244/190
Snow (Pf)	20.0	Lumber DOL	1.15	BC	0.12	Vert(TL)	n/a	-	n/a	999		
TCDL	10.0	Rep Stress Incr	YES	WB	0.09	Horiz(TL)	0.00	5	n/a	n/a		
BCLL	0.0*	Code	IRC2021/TPI2014	Matrix-MSH								
BCDL	10.0										Weight: 46 lb	FT = 20%

LUMBER
TOP CHORD 2x4 SP No.2
BOT CHORD 2x4 SP No.2
OTHERS 2x4 SP No.3

BRACING
TOP CHORD Structural wood sheathing directly applied or 6-0-0 oc purlins.
BOT CHORD Rigid ceiling directly applied or 10-0-0 oc bracing.

REACTIONS (size) 1=11-4-10, 5=11-4-10, 6=11-4-10, 7=11-4-10, 8=11-4-10
Max Horiz 1=107 (LC 11)
Max Uplift 1=-38 (LC 10), 5=-22 (LC 13), 6=-133 (LC 15), 8=-138 (LC 14)
Max Grav 1=76 (LC 25), 5=55 (LC 15), 6=438 (LC 21), 7=252 (LC 20), 8=441 (LC 20)

FORCES (lb) - Maximum Compression/Maximum Tension
TOP CHORD 1-2=-124/100, 2-3=-224/109, 3-4=-225/109, 4-5=-101/66
BOT CHORD 1-8=-30/70, 7-8=-23/70, 6-7=-23/70, 5-6=-35/70
WEBS 3-7=-163/1, 2-8=-432/242, 4-6=-431/236

NOTES
1) Unbalanced roof live loads have been considered for this design.
2) Wind: ASCE 7-16; Vult=130mph (3-second gust) Vasd=103mph; TCDL=6.0psf; BCDL=6.0psf; h=25ft; Cat. II; Exp B; Enclosed; MWFRS (envelope) exterior zone and C-C Exterior(2E) 0-0-5 to 3-0-5, Exterior(2R) 3-0-5 to 8-0-6, Exterior(2E) 8-0-6 to 11-0-6 zone; cantilever left and right exposed ; end vertical left and right exposed;C-C for members and forces & MWFRS for reactions shown; Lumber DOL=1.60 plate grip DOL=1.60
3) Truss designed for wind loads in the plane of the truss only. For studs exposed to wind (normal to the face), see Standard Industry Gable End Details as applicable, or consult qualified building designer as per ANSI/TPI 1.
4) TCLL: ASCE 7-16; Pr=20.0 psf (roof LL: Lum DOL=1.15 Plate DOL=1.15); Pf=20.0 psf (Lum DOL=1.15 Plate DOL=1.15); Is=1.0; Rough Cat B; Fully Exp.; Ce=0.9; Cs=1.00; Ct=1.10
5) Unbalanced snow loads have been considered for this design.
6) Gable requires continuous bottom chord bearing.
7) Gable studs spaced at 4-0-0 oc.
8) This truss has been designed for a 10.0 psf bottom chord live load nonconcurrent with any other live loads.
9) * This truss has been designed for a live load of 20.0psf on the bottom chord in all areas where a rectangle 3-06-00 tall by 2-00-00 wide will fit between the bottom chord and any other members.
10) Provide mechanical connection (by others) of truss to bearing plate capable of withstanding 38 lb uplift at joint 1, 22 lb uplift at joint 5, 138 lb uplift at joint 8 and 133 lb uplift at joint 6.

LOAD CASE(S) Standard

March 26,2025

WARNING - Verify design parameters and READ NOTES ON THIS AND INCLUDED MITEK REFERENCE PAGE MII-7473 rev. 1/2/2023 BEFORE USE.
Design valid for use only with MiTek® connectors. This design is based only upon parameters shown, and is for an individual building component, not a truss system. Before use, the building designer must verify the applicability of design parameters and properly incorporate this design into the overall building design. Bracing indicated is to prevent buckling of individual truss web and/or chord members only. Additional temporary and permanent bracing is always required for stability and to prevent collapse with possible personal injury and property damage. For general guidance regarding the fabrication, storage, delivery, erection and bracing of trusses and truss systems, see **ANSI/TPI1 Quality Criteria and DSB-22** available from Truss Plate Institute (www.tpinst.org) and **BCSI Building Component Safety Information** available from the Structural Building Component Association (www.sbcacomponents.com)

ENGINEERING BY TRENCO A MiTek Affiliate
818 Soundside Road
Edenton, NC 27932

Job	Truss	Truss Type	Qty	Ply	1004 Serenity-Roof-328 A CP GLH
25030123-01	VLE4	Valley	1	1	I72264686 Job Reference (optional)

Carter Components (Sanford, NC), Sanford, NC - 27332,

Run: 8.73 S Feb 19 2025 Print: 8.730 S Feb 19 2025 MiTek Industries, Inc. Tue Mar 25 09:15:28 Page: 1
ID:XFryJlebWm?dvpUHJx6YFyyzBHQ-RfC?PsB70Hq3NSgPqnL8w3uITXbGKWrCDoi7J4zJC?f

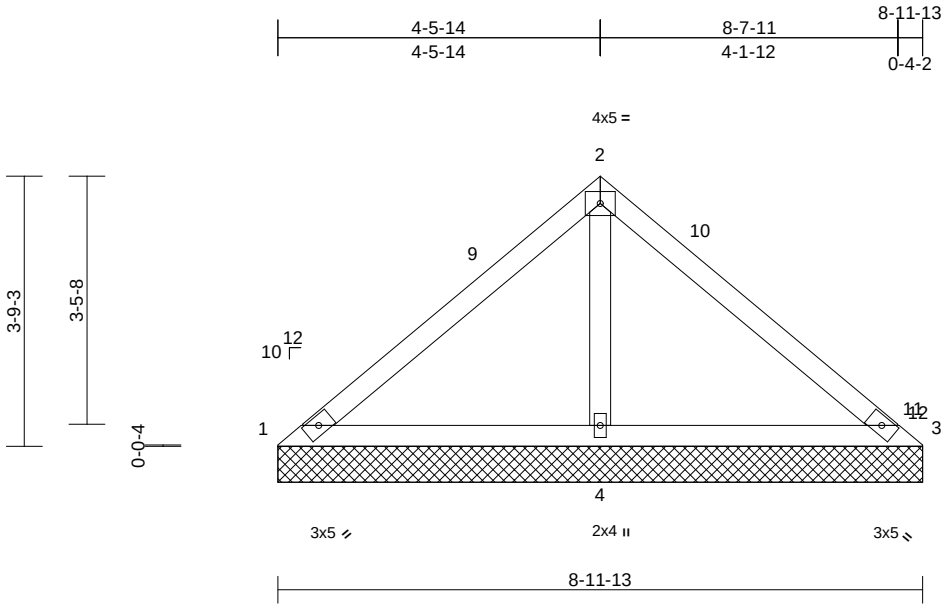

Scale = 1:32.1

Loading	(psf)	Spacing	2-0-0	CSI		DEFL	in	(loc)	l/defl	L/d	PLATES	GRIP
TCLL (roof)	20.0	Plate Grip DOL	1.15	TC	0.45	Vert(LL)	n/a	-	n/a	999	MT20	244/190
Snow (Pf)	20.0	Lumber DOL	1.15	BC	0.41	Vert(TL)	n/a	-	n/a	999		
TCDL	10.0	Rep Stress Incr	YES	WB	0.16	Horiz(TL)	0.00	4	n/a	n/a		
BCLL	0.0*	Code	IRC2021/TPI2014	Matrix-MP								
BCDL	10.0										Weight: 34 lb	FT = 20%

LUMBER
TOP CHORD 2x4 SP No.2
BOT CHORD 2x4 SP No.2
OTHERS 2x4 SP No.3

BRACING
TOP CHORD Structural wood sheathing directly applied or 8-11-13 oc purlins.
BOT CHORD Rigid ceiling directly applied or 6-0-0 oc bracing.

REACTIONS (size) 1=8-11-13, 3=8-11-13, 4=8-11-13
Max Horiz 1=83 (LC 11)
Max Uplift 1=-57 (LC 21), 3=-65 (LC 20), 4=-116 (LC 14)
Max Grav 1=74 (LC 20), 3=66 (LC 21), 4=742 (LC 21)

FORCES (lb) - Maximum Compression/Maximum Tension
TOP CHORD 1-2=-140/339, 2-3=-139/348
BOT CHORD 1-4=-262/187, 3-4=-262/187
WEBS 2-4=-604/275

NOTES
1) Unbalanced roof live loads have been considered for this design.
2) Wind: ASCE 7-16; Vult=130mph (3-second gust) Vasd=103mph; TCDL=6.0psf; BCDL=6.0psf; h=25ft; Cat. II; Exp B; Enclosed; MWFRS (envelope) exterior zone and C-C Exterior(2E) 0-0-5 to 3-0-5, Exterior(2R) 3-0-5 to 5-7-9, Exterior(2E) 5-7-9 to 8-7-9 zone; cantilever left and right exposed ; end vertical left and right exposed;C-C for members and forces & MWFRS for reactions shown; Lumber DOL=1.60 plate grip DOL=1.60
3) Truss designed for wind loads in the plane of the truss only. For studs exposed to wind (normal to the face), see Standard Industry Gable End Details as applicable, or consult qualified building designer as per ANSI/TPI 1.
4) TCLL: ASCE 7-16; Pr=20.0 psf (roof LL: Lum DOL=1.15 Plate DOL=1.15); Pf=20.0 psf (Lum DOL=1.15 Plate DOL=1.15); Is=1.0; Rough Cat B; Fully Exp.; Ce=0.9; Cs=1.00; Ct=1.10
5) Unbalanced snow loads have been considered for this design.
6) Gable requires continuous bottom chord bearing.
7) Gable studs spaced at 4-0-0 oc.
8) This truss has been designed for a 10.0 psf bottom chord live load nonconcurrent with any other live loads.
9) * This truss has been designed for a live load of 20.0psf on the bottom chord in all areas where a rectangle 3-06-00 tall by 2-00-00 wide will fit between the bottom chord and any other members.
10) Provide mechanical connection (by others) of truss to bearing plate capable of withstanding 57 lb uplift at joint 1, 65 lb uplift at joint 3 and 116 lb uplift at joint 4.

LOAD CASE(S) Standard

March 26,2025

WARNING - Verify design parameters and READ NOTES ON THIS AND INCLUDED MITEK REFERENCE PAGE MII-7473 rev. 1/2/2023 BEFORE USE.
Design valid for use only with MiTek® connectors. This design is based only upon parameters shown, and is for an individual building component, not a truss system. Before use, the building designer must verify the applicability of design parameters and properly incorporate this design into the overall building design. Bracing indicated is to prevent buckling of individual truss web and/or chord members only. Additional temporary and permanent bracing is always required for stability and to prevent collapse with possible personal injury and property damage. For general guidance regarding the fabrication, storage, delivery, erection and bracing of trusses and truss systems, see **ANSI/TPI1 Quality Criteria and DSB-22** available from Truss Plate Institute (www.tpinst.org) and **BCSI Building Component Safety Information** available from the Structural Building Component Association (www.sbcacomponents.com)

ENGINEERING BY TRENCO A MiTek Affiliate
818 Soundside Road
Edenton, NC 27932

Job	Truss	Truss Type	Qty	Ply	1004 Serenity-Roof-328 A CP GLH
25030123-01	VLE5	Valley	1	1	I72264687 Job Reference (optional)

Carter Components (Sanford, NC), Sanford, NC - 27332,

Run: 8.73 S Feb 19 2025 Print: 8.730 S Feb 19 2025 MiTek Industries, Inc. Tue Mar 25 09:15:28 Page: 1
ID:XFryJlebWm?dvpUHJx6YFyyzBHQ-RfC?PsB70Hq3NSgPqnL8w3uITXbGKWrCDoi7J4zJC?f

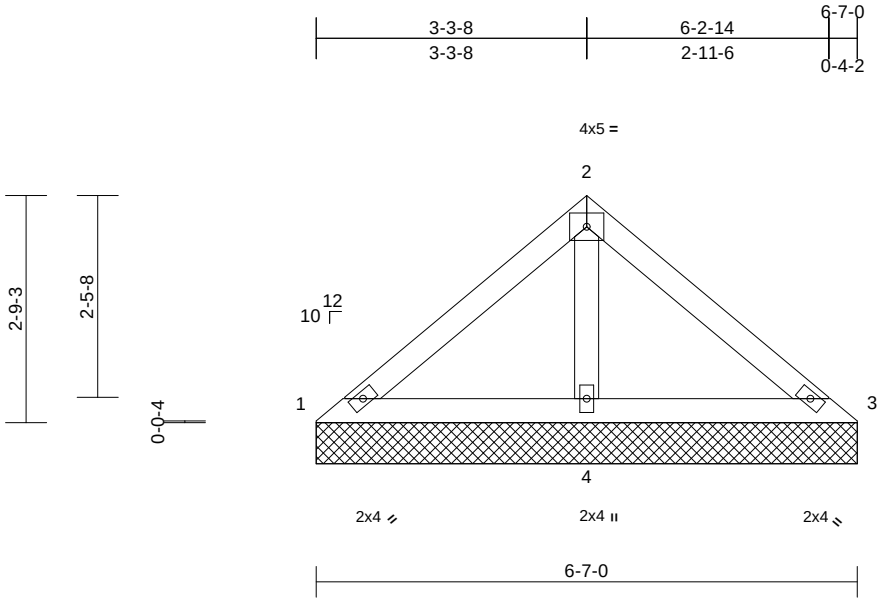

Scale = 1:28

Loading	(psf)	Spacing	2-0-0	CSI		DEFL	in	(loc)	l/defl	L/d	PLATES	GRIP
TCLL (roof)	20.0	Plate Grip DOL	1.15	TC	0.20	Vert(LL)	n/a	-	n/a	999	MT20	244/190
Snow (Pf)	20.0	Lumber DOL	1.15	BC	0.22	Vert(TL)	n/a	-	n/a	999		
TCDL	10.0	Rep Stress Incr	YES	WB	0.07	Horiz(TL)	0.00	4	n/a	n/a		
BCLL	0.0*	Code	IRC2021/TPI2014	Matrix-MP								
BCDL	10.0										Weight: 24 lb	FT = 20%

LUMBER
TOP CHORD 2x4 SP No.2
BOT CHORD 2x4 SP No.2
OTHERS 2x4 SP No.3

BRACING
TOP CHORD Structural wood sheathing directly applied or 6-7-0 oc purlins.
BOT CHORD Rigid ceiling directly applied or 6-0-0 oc bracing.

REACTIONS (size) 1=6-7-0, 3=6-7-0, 4=6-7-0
Max Horiz 1=-60 (LC 12)
Max Uplift 1=-5 (LC 21), 3=-5 (LC 20), 4=-61 (LC 14)
Max Grav 1=102 (LC 20), 3=102 (LC 21), 4=461 (LC 20)

FORCES (lb) - Maximum Compression/Maximum Tension
TOP CHORD 1-2=-88/190, 2-3=-88/190
BOT CHORD 1-4=-150/135, 3-4=-150/135
WEBS 2-4=-359/169

NOTES
1) Unbalanced roof live loads have been considered for this design.
2) Wind: ASCE 7-16; Vult=130mph (3-second gust) Vasd=103mph; TCDL=6.0psf; BCDL=6.0psf; h=25ft; Cat. II; Exp B; Enclosed; MWFRS (envelope) exterior zone and C-C Exterior(2E) zone; cantilever left and right exposed ; end vertical left and right exposed;C-C for members and forces & MWFRS for reactions shown; Lumber DOL=1.60 plate grip DOL=1.60
3) Truss designed for wind loads in the plane of the truss only. For studs exposed to wind (normal to the face), see Standard Industry Gable End Details as applicable, or consult qualified building designer as per ANSI/TPI 1.
4) TCLL: ASCE 7-16; Pr=20.0 psf (roof LL: Lum DOL=1.15 Plate DOL=1.15); Pf=20.0 psf (Lum DOL=1.15 Plate DOL=1.15); Is=1.0; Rough Cat B; Fully Exp.; Ce=0.9; Cs=1.00; Ct=1.10
5) Unbalanced snow loads have been considered for this design.
6) Gable requires continuous bottom chord bearing.
7) Gable studs spaced at 4-0-0 oc.
8) This truss has been designed for a 10.0 psf bottom chord live load nonconcurrent with any other live loads.
9) * This truss has been designed for a live load of 20.0psf on the bottom chord in all areas where a rectangle 3-06-00 tall by 2-00-00 wide will fit between the bottom chord and any other members.
10) Provide mechanical connection (by others) of truss to bearing plate capable of withstanding 5 lb uplift at joint 1, 5 lb uplift at joint 3 and 61 lb uplift at joint 4.

LOAD CASE(S) Standard

March 26,2025

WARNING - Verify design parameters and READ NOTES ON THIS AND INCLUDED MITEK REFERENCE PAGE MII-7473 rev. 1/2/2023 BEFORE USE.
Design valid for use only with MiTek® connectors. This design is based only upon parameters shown, and is for an individual building component, not a truss system. Before use, the building designer must verify the applicability of design parameters and properly incorporate this design into the overall building design. Bracing indicated is to prevent buckling of individual truss web and/or chord members only. Additional temporary and permanent bracing is always required for stability and to prevent collapse with possible personal injury and property damage. For general guidance regarding the fabrication, storage, delivery, erection and bracing of trusses and truss systems, see **ANSI/TPI1 Quality Criteria and DSB-22** available from Truss Plate Institute (www.tpinst.org) and **BCSI Building Component Safety Information** available from the Structural Building Component Association (www.sbcacomponents.com)

ENGINEERING BY TRENCO A MiTek Affiliate
818 Soundside Road
Edenton, NC 27932

Job	Truss	Truss Type	Qty	Ply	1004 Serenity-Roof-328 A CP GLH
25030123-01	VLE6	Valley	1	1	I72264688 Job Reference (optional)

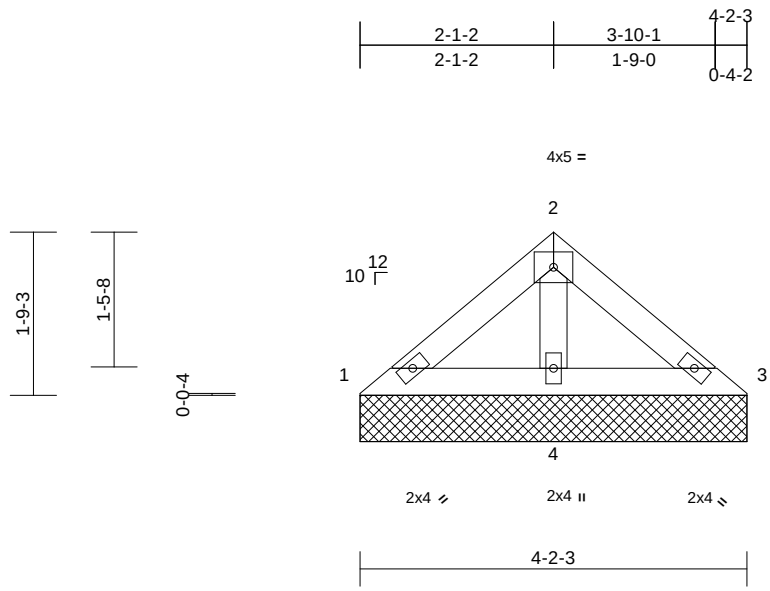

Scale = 1:24.9

Loading	(psf)	Spacing	2-0-0	CSI		DEFL	in	(loc)	l/defl	L/d	PLATES	GRIP
TCLL (roof)	20.0	Plate Grip DOL	1.15	TC	0.06	Vert(LL)	n/a	-	n/a	999	MT20	244/190
Snow (Pf)	20.0	Lumber DOL	1.15	BC	0.08	Vert(TL)	n/a	-	n/a	999		
TCDL	10.0	Rep Stress Incr	YES	WB	0.03	Horiz(TL)	0.00	4	n/a	n/a		
BCLL	0.0*	Code	IRC2021/TPI2014	Matrix-MP								
BCDL	10.0										Weight: 15 lb	FT = 20%

LUMBER
TOP CHORD 2x4 SP No.2
BOT CHORD 2x4 SP No.2
OTHERS 2x4 SP No.3

BRACING
TOP CHORD Structural wood sheathing directly applied or 4-2-3 oc purlins.
BOT CHORD Rigid ceiling directly applied or 6-0-0 oc bracing.

REACTIONS (size) 1=4-2-3, 3=4-2-3, 4=4-2-3
Max Horiz 1=37 (LC 11)
Max Uplift 1=-1 (LC 14), 3=-8 (LC 15), 4=-25 (LC 14)
Max Grav 1=80 (LC 20), 3=80 (LC 21), 4=240 (LC 20)

FORCES (lb) - Maximum Compression/Maximum Tension
TOP CHORD 1-2=-72/77, 2-3=-72/77
BOT CHORD 1-4=-62/70, 3-4=-62/70
WEBS 2-4=-159/69

NOTES
1) Unbalanced roof live loads have been considered for this design.
2) Wind: ASCE 7-16; Vult=130mph (3-second gust) Vasd=103mph; TCDL=6.0psf; BCDL=6.0psf; h=25ft; Cat. II; Exp B; Enclosed; MWFRS (envelope) exterior zone and C-C Exterior(2E) zone; cantilever left and right exposed ; end vertical left and right exposed;C-C for members and forces & MWFRS for reactions shown; Lumber DOL=1.60 plate grip DOL=1.60
3) Truss designed for wind loads in the plane of the truss only. For studs exposed to wind (normal to the face), see Standard Industry Gable End Details as applicable, or consult qualified building designer as per ANSI/TPI 1.
4) TCLL: ASCE 7-16; Pr=20.0 psf (roof LL: Lum DOL=1.15 Plate DOL=1.15); Pf=20.0 psf (Lum DOL=1.15 Plate DOL=1.15); Is=1.0; Rough Cat B; Fully Exp.; Ce=0.9; Cs=1.00; Ct=1.10
5) Unbalanced snow loads have been considered for this design.
6) Gable requires continuous bottom chord bearing.
7) Gable studs spaced at 4-0-0 oc.
8) This truss has been designed for a 10.0 psf bottom chord live load nonconcurrent with any other live loads.
9) * This truss has been designed for a live load of 20.0psf on the bottom chord in all areas where a rectangle 3-06-00 tall by 2-00-00 wide will fit between the bottom chord and any other members.
10) Provide mechanical connection (by others) of truss to bearing plate capable of withstanding 1 lb uplift at joint 1, 8 lb uplift at joint 3 and 25 lb uplift at joint 4.

LOAD CASE(S) Standard

March 26,2025

WARNING - Verify design parameters and READ NOTES ON THIS AND INCLUDED MITEK REFERENCE PAGE MII-7473 rev. 1/2/2023 BEFORE USE.
Design valid for use only with MiTek® connectors. This design is based only upon parameters shown, and is for an individual building component, not a truss system. Before use, the building designer must verify the applicability of design parameters and properly incorporate this design into the overall building design. Bracing indicated is to prevent buckling of individual truss web and/or chord members only. Additional temporary and permanent bracing is always required for stability and to prevent collapse with possible personal injury and property damage. For general guidance regarding the fabrication, storage, delivery, erection and bracing of trusses and truss systems, see **ANSI/TPI1 Quality Criteria and DSB-22** available from Truss Plate Institute (www.tpinst.org) and **BCSI Building Component Safety Information** available from the Structural Building Component Association (www.sbcacomponents.com)

ENGINEERING BY TRENCO A MiTek Affiliate
818 Soundside Road
Edenton, NC 27932

Job	Truss	Truss Type	Qty	Ply	1004 Serenity-Roof-328 A CP GLH
25030123-01	VLG1	Valley	1	1	I72264689 Job Reference (optional)

Carter Components (Sanford, NC), Sanford, NC - 27332,

Run: 8.73 S Feb 19 2025 Print: 8.730 S Feb 19 2025 MiTek Industries, Inc. Tue Mar 25 09:15:28 Page: 1
ID:aURQiS0qpwcnaEzI3_tgZTyjNsg-RfC?PsB70Hq3NSgPqnL8w3uITXbGKWrCDoi7J4zJC?f

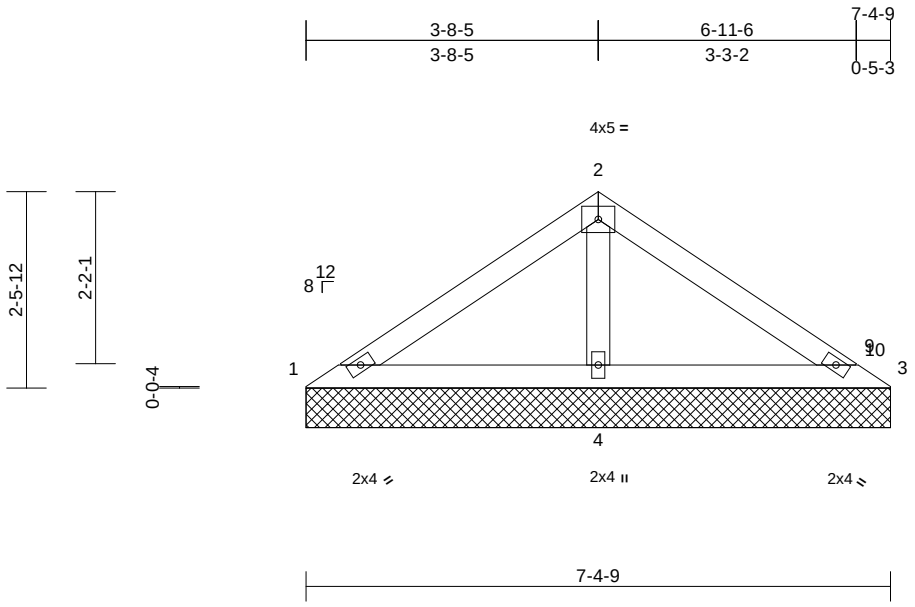

Scale = 1:29.1

Loading	(psf)	Spacing	2-0-0	CSI		DEFL	in	(loc)	l/defl	L/d	PLATES	GRIP
TCLL (roof)	20.0	Plate Grip DOL	1.15	TC	0.25	Vert(LL)	n/a	-	n/a	999	MT20	244/190
Snow (Pf)	20.0	Lumber DOL	1.15	BC	0.25	Vert(TL)	n/a	-	n/a	999		
TCDL	10.0	Rep Stress Incr	YES	WB	0.08	Horiz(TL)	0.00	4	n/a	n/a		
BCLL	0.0*	Code	IRC2021/TPI2014	Matrix-MP								
BCDL	10.0										Weight: 25 lb	FT = 20%

LUMBER
TOP CHORD 2x4 SP No.2
BOT CHORD 2x4 SP No.2
OTHERS 2x4 SP No.3

BRACING
TOP CHORD Structural wood sheathing directly applied or 7-2-12 oc purlins.
BOT CHORD Rigid ceiling directly applied or 6-0-0 oc bracing.

REACTIONS (size) 1=7-4-9, 3=7-4-9, 4=7-4-9
Max Horiz 1=54 (LC 11)
Max Uplift 1=-10 (LC 21), 3=-24 (LC 20), 4=-56 (LC 14)
Max Grav 1=102 (LC 20), 3=67 (LC 21), 4=518 (LC 21)

FORCES (lb) - Maximum Compression/Maximum Tension
TOP CHORD 1-2=-96/237, 2-3=-83/237
BOT CHORD 1-4=-197/126, 3-4=-197/126
WEBS 2-4=-413/176

NOTES
1) Unbalanced roof live loads have been considered for this design.
2) Wind: ASCE 7-16; Vult=130mph (3-second gust) Vasd=103mph; TCDL=6.0psf; BCDL=6.0psf; h=25ft; Cat. II; Exp B; Enclosed; MWFRS (envelope) exterior zone and C-C Exterior(2E) 0-0-6 to 3-0-6, Exterior(2R) 3-0-6 to 3-8-11, Exterior(2E) 3-8-11 to 6-11-9 zone; cantilever left and right exposed ; end vertical left and right exposed;C-C for members and forces & MWFRS for reactions shown; Lumber DOL=1.60 plate grip DOL=1.60
3) Truss designed for wind loads in the plane of the truss only. For studs exposed to wind (normal to the face), see Standard Industry Gable End Details as applicable, or consult qualified building designer as per ANSI/TPI 1.
4) TCLL: ASCE 7-16; Pr=20.0 psf (roof LL: Lum DOL=1.15 Plate DOL=1.15); Pf=20.0 psf (Lum DOL=1.15 Plate DOL=1.15); Is=1.0; Rough Cat B; Fully Exp.; Ce=0.9; Cs=1.00; Ct=1.10
5) Unbalanced snow loads have been considered for this design.
6) Gable requires continuous bottom chord bearing.
7) Gable studs spaced at 4-0-0 oc.
8) This truss has been designed for a 10.0 psf bottom chord live load nonconcurrent with any other live loads.
9) * This truss has been designed for a live load of 20.0psf on the bottom chord in all areas where a rectangle 3-06-00 tall by 2-00-00 wide will fit between the bottom chord and any other members.
10) Provide mechanical connection (by others) of truss to bearing plate capable of withstanding 10 lb uplift at joint 1 and 24 lb uplift at joint 3.

LOAD CASE(S) Standard

March 26,2025

WARNING - Verify design parameters and READ NOTES ON THIS AND INCLUDED MITEK REFERENCE PAGE MII-7473 rev. 1/2/2023 BEFORE USE.
Design valid for use only with MiTek® connectors. This design is based only upon parameters shown, and is for an individual building component, not a truss system. Before use, the building designer must verify the applicability of design parameters and properly incorporate this design into the overall building design. Bracing indicated is to prevent buckling of individual truss web and/or chord members only. Additional temporary and permanent bracing is always required for stability and to prevent collapse with possible personal injury and property damage. For general guidance regarding the fabrication, storage, delivery, erection and bracing of trusses and truss systems, see **ANSI/TPI1 Quality Criteria and DSB-22** available from Truss Plate Institute (www.tpinst.org) and **BCSI Building Component Safety Information** available from the Structural Building Component Association (www.sbcacomponents.com)

ENGINEERING BY TRENCO A MiTek Affiliate
818 Soundside Road
Edenton, NC 27932

Job	Truss	Truss Type	Qty	Ply	1004 Serenity-Roof-328 A CP GLH
25030123-01	VLG2	Valley	1	1	I72264690 Job Reference (optional)

Carter Components (Sanford, NC), Sanford, NC - 27332, Run: 8.73 S Feb 19 2025 Print: 8.730 S Feb 19 2025 MiTek Industries, Inc. Tue Mar 25 09:15:29 Page: 1

ID:?Kf_vIGN638x_JV8EBEMMhyjNsM-RfC?PsB70Hq3NSgPqnL8w3uITXbGKWrCDoi7J4zJC?f

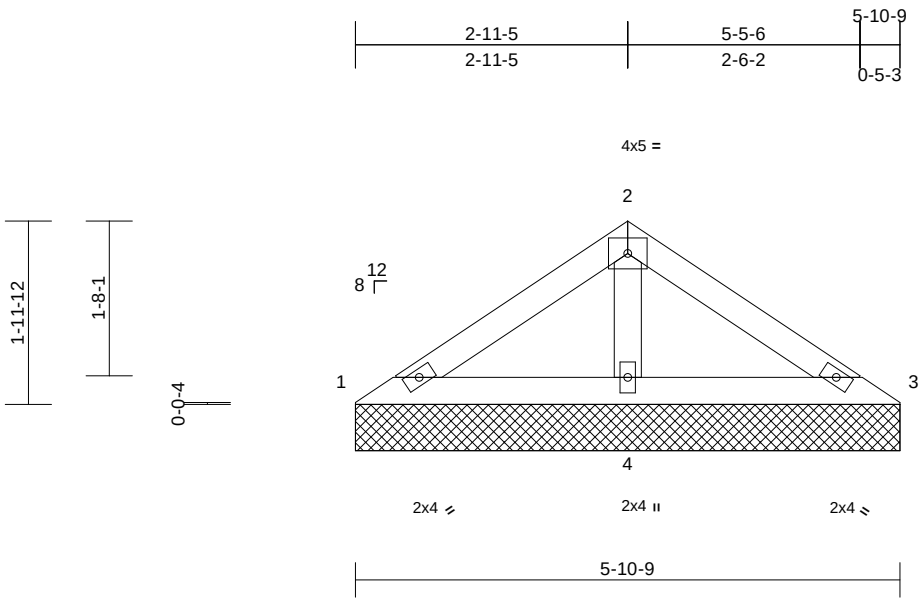

Scale = 1:24.9

Loading	(psf)	Spacing	2-0-0	CSI		DEFL	in	(loc)	l/defl	L/d	PLATES	GRIP
TCLL (roof)	20.0	Plate Grip DOL	1.15	TC	0.14	Vert(LL)	n/a	-	n/a	999	MT20	244/190
Snow (Pf)	20.0	Lumber DOL	1.15	BC	0.16	Vert(TL)	n/a	-	n/a	999		
TCDL	10.0	Rep Stress Incr	YES	WB	0.05	Horiz(TL)	0.00	4	n/a	n/a		
BCLL	0.0*	Code	IRC2021/TPI2014	Matrix-MP								
BCDL	10.0										Weight: 20 lb	FT = 20%

LUMBER

TOP CHORD 2x4 SP No.2
BOT CHORD 2x4 SP No.2
OTHERS 2x4 SP No.3

BRACING

TOP CHORD Structural wood sheathing directly applied or 5-10-9 oc purlins.
BOT CHORD Rigid ceiling directly applied or 6-0-0 oc bracing.

REACTIONS (size) 1=5-10-9, 3=5-10-9, 4=5-10-9
Max Horiz 1=42 (LC 11)
Max Uplift 1=-4 (LC 14), 3=-11 (LC 15), 4=-35 (LC 14)
Max Grav 1=96 (LC 20), 3=96 (LC 21), 4=377 (LC 20)

FORCES (lb) - Maximum Compression/Maximum Tension
TOP CHORD 1-2=-95/154, 2-3=-95/154
BOT CHORD 1-4=-132/101, 3-4=-132/101
WEBS 2-4=-284/126

NOTES

1) Unbalanced roof live loads have been considered for this design.
2) Wind: ASCE 7-16; Vult=130mph (3-second gust) Vasd=103mph; TCDL=6.0psf; BCDL=6.0psf; h=25ft; Cat. II; Exp B; Enclosed; MWFRS (envelope) exterior zone and C-C Exterior(2E) zone; cantilever left and right exposed ; end vertical left and right exposed;C-C for members and forces & MWFRS for reactions shown; Lumber DOL=1.60 plate grip DOL=1.60
3) Truss designed for wind loads in the plane of the truss only. For studs exposed to wind (normal to the face), see Standard Industry Gable End Details as applicable, or consult qualified building designer as per ANSI/TPI 1.
4) TCLL: ASCE 7-16; Pr=20.0 psf (roof LL: Lum DOL=1.15 Plate DOL=1.15); Pf=20.0 psf (Lum DOL=1.15 Plate DOL=1.15); Is=1.0; Rough Cat B; Fully Exp.; Ce=0.9; Cs=1.00; Ct=1.10
5) Unbalanced snow loads have been considered for this design.
6) Gable requires continuous bottom chord bearing.
7) Gable studs spaced at 4-0-0 oc.
8) This truss has been designed for a 10.0 psf bottom chord live load nonconcurrent with any other live loads.
9) * This truss has been designed for a live load of 20.0psf on the bottom chord in all areas where a rectangle 3-06-00 tall by 2-00-00 wide will fit between the bottom chord and any other members.
10) Provide mechanical connection (by others) of truss to bearing plate capable of withstanding 4 lb uplift at joint 1, 11 lb uplift at joint 3 and 35 lb uplift at joint 4.

LOAD CASE(S) Standard

March 26,2025

WARNING - Verify design parameters and READ NOTES ON THIS AND INCLUDED MITEK REFERENCE PAGE MII-7473 rev. 1/2/2023 BEFORE USE.
Design valid for use only with MiTek® connectors. This design is based only upon parameters shown, and is for an individual building component, not a truss system. Before use, the building designer must verify the applicability of design parameters and properly incorporate this design into the overall building design. Bracing indicated is to prevent buckling of individual truss web and/or chord members only. Additional temporary and permanent bracing is always required for stability and to prevent collapse with possible personal injury and property damage. For general guidance regarding the fabrication, storage, delivery, erection and bracing of trusses and truss systems, see **ANSI/TPI1 Quality Criteria and DSB-22** available from Truss Plate Institute (www.tpinst.org) and **BCSI Building Component Safety Information** available from the Structural Building Component Association (www.sbcacomponents.com)

ENGINEERING BY TRENCO A MiTek Affiliate
818 Soundside Road
Edenton, NC 27932

Symbols

PLATE LOCATION AND ORIENTATION

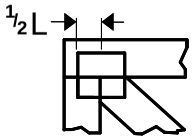

Center plate on joint unless x, y offsets are indicated. Dimensions are in ft-in-sixteenths. Apply plates to both sides of truss and fully embed teeth.

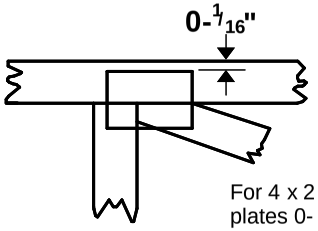

For 4 x 2 orientation, locate plates 0- 1/16" from outside edge of truss.

This symbol indicates the required direction of slots in connector plates.

* Plate location details available in MiTek software or upon request.

PLATE SIZE

4 x 4

The first dimension is the plate width measured perpendicular to slots. Second dimension is the length parallel to slots.

LATERAL BRACING LOCATION

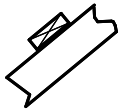

Indicated by symbol shown and/or by text in the bracing section of the output. Use T or I bracing if indicated.

BEARING

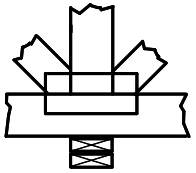

Indicates location where bearings (supports) occur. Icons vary but reaction section indicates joint number/letter where bearings occur. Min size shown is for crushing only.

Industry Standards:

ANSI/TPI1: National Design Specification for Metal Plate Connected Wood Truss Construction.
DSB-22: Design Standard for Bracing.
BCSI: Building Component Safety Information, Guide to Good Practice for Handling, Installing, Restraining & Bracing of Metal Plate Connected Wood Trusses.

Numbering System

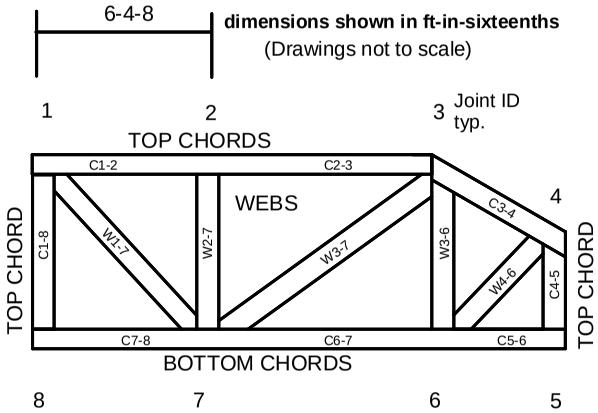

JOINTS ARE GENERALLY NUMBERED/LETTERED CLOCKWISE AROUND THE TRUSS STARTING AT THE JOINT FARTHEST TO THE LEFT.

CHORDS AND WEBS ARE IDENTIFIED BY END JOINT NUMBERS/LETTERS.

Product Code Approvals

ICC-ES Reports:

ESR-1988, ESR-2362, ESR-2685, ESR-3282
ESR-4722, ESL-1388

Design General Notes

Trusses are designed for wind loads in the plane of the truss unless otherwise shown.

Lumber design values are in accordance with ANSI/TPI 1 section 6.3 These truss designs rely on lumber values established by others.

© 2023 MiTek® All Rights Reserved

MiTek®

ENGINEERING BY TRENCO
A MiTek Affiliate

General Safety Notes

Failure to Follow Could Cause Property Damage or Personal Injury

1. Additional stability bracing for truss system, e.g. diagonal or X-bracing, is always required. See BCSI.
2. Truss bracing must be designed by an engineer. For wide truss spacing, individual lateral braces themselves may require bracing, or alternative Tor I bracing should be considered.
3. Never exceed the design loading shown and never stack materials on inadequately braced trusses.
4. Provide copies of this truss design to the building designer, erection supervisor, property owner and all other interested parties.
5. Cut members to bear tightly against each other.
6. Place plates on each face of truss at each joint and embed fully. Knots and wane at joint locations are regulated by ANSI/TPI 1.
7. Design assumes trusses will be suitably protected from the environment in accord with ANSI/TPI 1.
8. Unless otherwise noted, moisture content of lumber shall not exceed 19% at time of fabrication.
9. Unless expressly noted, this design is not applicable for use with fire retardant, preservative treated, or green lumber.
10. Camber is a non-structural consideration and is the responsibility of truss fabricator. General practice is to camber for dead load deflection.
11. Plate type, size, orientation and location dimensions indicated are minimum plating requirements.
12. Lumber used shall be of the species and size, and in all respects, equal to or better than that specified.
13. Top chords must be sheathed or purlins provided at spacing indicated on design.
14. Bottom chords require lateral bracing at 10 ft. spacing, or less, if no ceiling is installed, unless otherwise noted.
15. Connections not shown are the responsibility of others.
16. Do not cut or alter truss member or plate without prior approval of an engineer.
17. Install and load vertically unless indicated otherwise.
18. Use of green or treated lumber may pose unacceptable environmental, health or performance risks. Consult with project engineer before use.
19. Review all portions of this design (front, back, words and pictures) before use. Reviewing pictures alone is not sufficient.
20. Design assumes manufacture in accordance with ANSI/TPI 1 Quality Criteria.
21. The design does not take into account any dynamic or other loads other than those expressly stated.