THIS IS A TRUSS PLACEMENT DIAGRAM (TPD) ONLY; NOT AN ENGINEERED DOCUMENT. Trusses are designed as individual building components to be incorporated into the building design at the specification of the building designer. See individual truss design drawings (TDD's) for each truss design identified on the TPD. The Contractor is responsible for the temporary bracing of the roof and floor system, and requirements for the permanent restraint/bracing of truss systems may be met by following the methods outlined in ANSI-TPI 1-2014 - 2.3.3. The design of the support structure including but not limited to headers, beams, walls, and columns is also the responsibility of the building designer. For general guidance regarding installation and bracing, consult "Building Component Safety Information" (BCSI) available from the SBC Association (www.sbcacomponents.com). It is the responsibility of the General Contractor to verify that the provided component layout matches the final intended construction plans, loading conditions, and use. If they do not, it is the responsibility of the General Contractor to notify UFP and provide plans containing the latest specifications and designs. UFP will not be responsible for plan changes by others after final approval of shop drawings, or for errors or modifications made on-site during construction. DO NOT CUT, NOTCH, DRILL, OR OTHERWISE "REPAIR" MANUFACTURED TRUSSES IN ANY WAY WITHOUT PRIOR WRITTEN AUTHORIZATION BY A LICENSED PROFESSIONAL DESIGNATED BY UFP. The Framer is responsible to verify all dimensions, including adjusting member spacing within tolerances to allow for the drop and rise of plumbing/HVAC, unless noted otherwise. Truss-to-wall connections, if shown, are for uplift only and do not consider lateral loads. All connectors on this project are to be installed per the connector manufacturer's specifications. All connectors shown that are not truss-to-truss are suggestions only and are to be verified by the Building Designer or Engineer of Record for suitability to this particular project. UFP accepts no responsibility for the specific application or suitability of any connector that is not truss-to-truss as they apply to this specific structure.

PLACEMENT PLAN

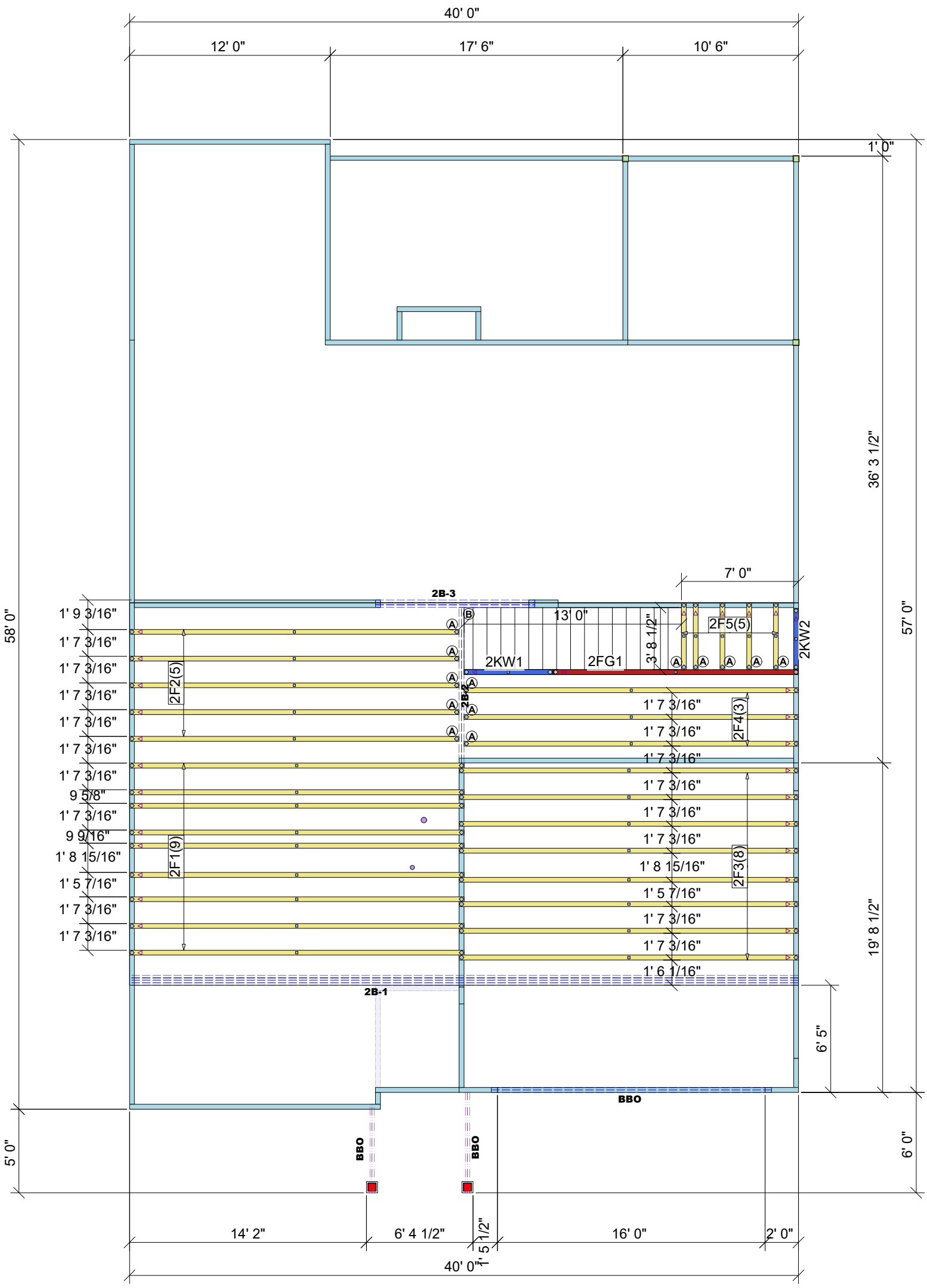

FLUSH LVL BEAMS					
PlotID	Length	Product	Plies	Net Qty	Fab Type
2B-1	40' 0"	1 3/4" x 14" 2.0E Microllam® LVL	4	4	MFD
2B-2	10' 0"	1 3/4" x 14" 2.0E Microllam® LVL	2	2	MFD
2B-3	10' 0"	1 3/4" x 14" 2.0E Microllam® LVL	3	3	MFD

FLOOR HANGER LIST		
A	THA422	13
B	HHUS410	1

△ INDICATES LEFT END OF TRUSS

SCALE: N.T.S

ROOF AREA:	3063.35 ft² sqft	RIDGE LINE:	114.99 ft	VALLEY LINES:	124.72 ft	HIP LINES:	0 ft	THESE VALUES ARE APPROXIMATE ONLY

JOB #: 25030967F2

DESIGNER AM
LAYOUT DATE -
ARCH DATE -
STRUC DATE -

REVISIONS		
DATE	DESCRIPTION	DSN
-	-	-
-	-	-
-	-	-
-	-	-
-	-	-
-	-	-
-	-	-
-	-	-

GUILFORD GEORGIAN 2ND FLOOR

477 BEACON HILL RD.
LILLINGTON, NC 27546

PBS/NEW HOMES INC.

LOT 29 DUNCAN'S CREEK

TRUSSTRAX UFP CONSTRUCTION
TrussTrax.ufpi.com

UFP SITE BUILT
A UFP INDUSTRIES COMPANY
Burlington, NC Locust, NC
Chesapeake, VA Liberty, NC
Clinton, NC Ooltewah, TN
Conway, SC Pearisburg, VA
Jefferson, GA Stanfield, NC
Customer Service (800) 476-9356

Job	Truss	Truss Type	Qty	Ply	PBS/GUILFORD GEORGIAN RH 2ND FL OW
72507639	2F1	Truss	9	1	Job Reference (optional)

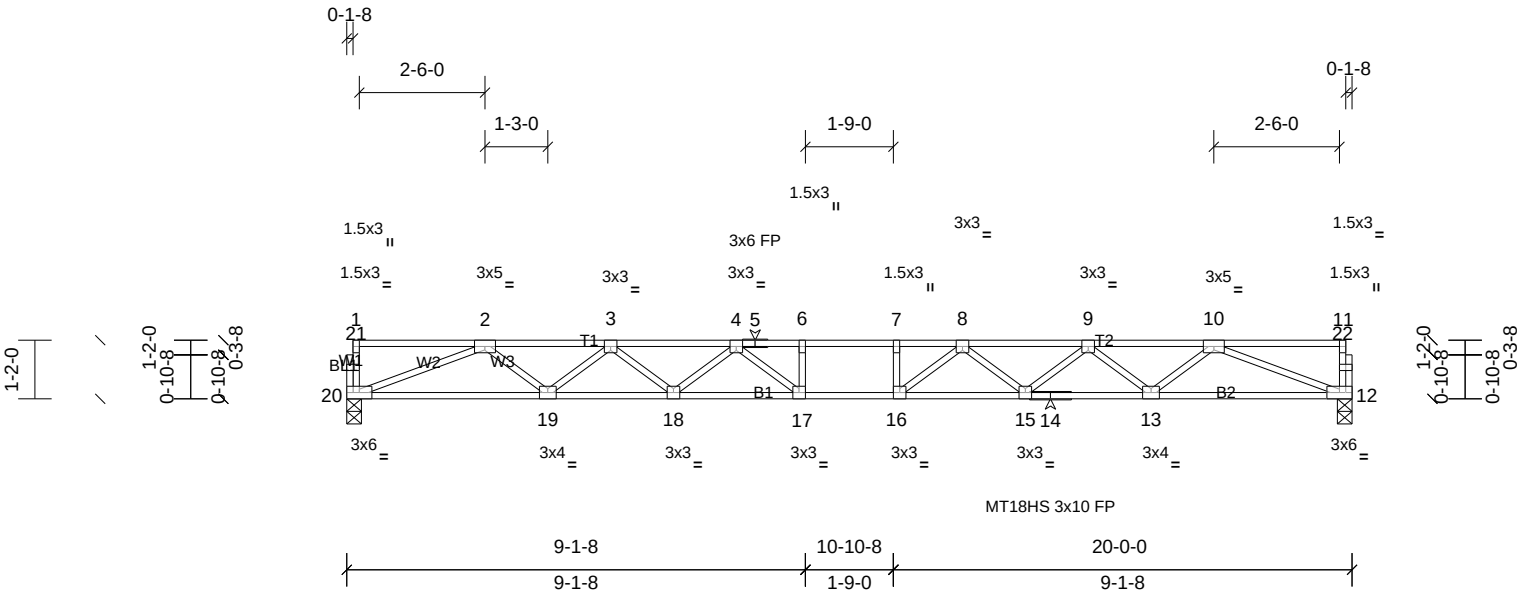

Scale = 1:46

Loading	(psf)	Spacing	1-7-3	CSI		DEFL	in	(loc)	l/defl	L/d	PLATES	GRIP
TCLL	40.0	Plate Grip DOL	1.00	TC	0.33	Vert(LL)	-0.33	16-17	>719	480	MT18HS	244/190
TCDL	10.0	Lumber DOL	1.00	BC	0.48	Vert(CT)	-0.45	16-17	>523	360	MT20	244/190
BCLL	0.0	Rep Stress Incr	YES	WB	0.57	Horz(CT)	0.07	12	n/a	n/a		
BCDL	5.0	Code	IRC2015/TPI2014	Matrix-SH							Weight: 98 lb	FT = 20%F, 11%E

LUMBER

TOP CHORD	2x4 SP SS(flat)
BOT CHORD	2x4 SP SS(flat)
WEBS	2x4 SP No.3(flat)
OTHERS	2x4 SP No.3(flat)

BRACING

TOP CHORD	Structural wood sheathing directly applied or 6-0-0 oc purlins, except end verticals.
BOT CHORD	Rigid ceiling directly applied or 10-0-0 oc bracing.

REACTIONS (lb/size) 12=863/0-3-8, (min. 0-1-8), 20=863/0-3-8, (min. 0-1-8)

FORCES (lb) - Max. Comp./Max. Ten. - All forces 250 (lb) or less except when shown.

TOP CHORD 2-3=-2574/0, 3-4=-3559/0, 4-5=-4078/0, 5-6=-4078/0, 6-7=-4078/0, 7-8=-4078/0, 8-9=-3559/0, 9-10=-2574/0

BOT CHORD 19-20=0/1927, 18-19=0/3188, 17-18=0/3909, 16-17=0/4078, 15-16=0/3909, 14-15=0/3188, 13-14=0/3188, 12-13=0/1927

WEBS 10-12=-2067/0, 2-20=-2067/0, 10-13=0/843, 2-19=0/843, 9-13=-799/0, 3-19=-799/0, 9-15=0/483, 3-18=0/483, 8-15=-455/0, 4-18=-455/0, 8-16=-134/529, 4-17=-134/529

NOTES

1) Unbalanced floor live loads have been considered for this design.
2) All plates are MT20 plates unless otherwise indicated.
3) All plates are 3x3 MT20 unless otherwise indicated.
4) This truss is designed in accordance with the 2015 International Residential Code sections R502.11.1 and R802.10.2 and referenced standard ANSI/TPI 1.
5) Recommend 2x6 strongbacks, on edge, spaced at 10-00-00 oc and fastened to each truss with 3-10d (0.131" X 3") nails. Strongbacks to be attached to walls at their outer ends or restrained by other means.

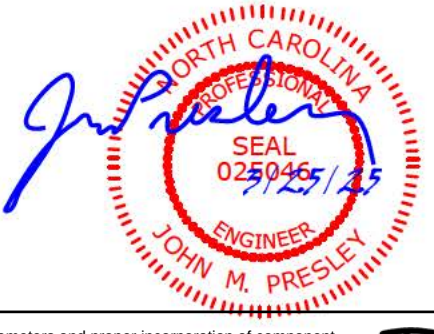

Job	Truss	Truss Type	Qty	Ply	PBS/GUILFORD GEORGIAN RH 2ND FL OW
72507639	2F2	Truss	5	1	Job Reference (optional)

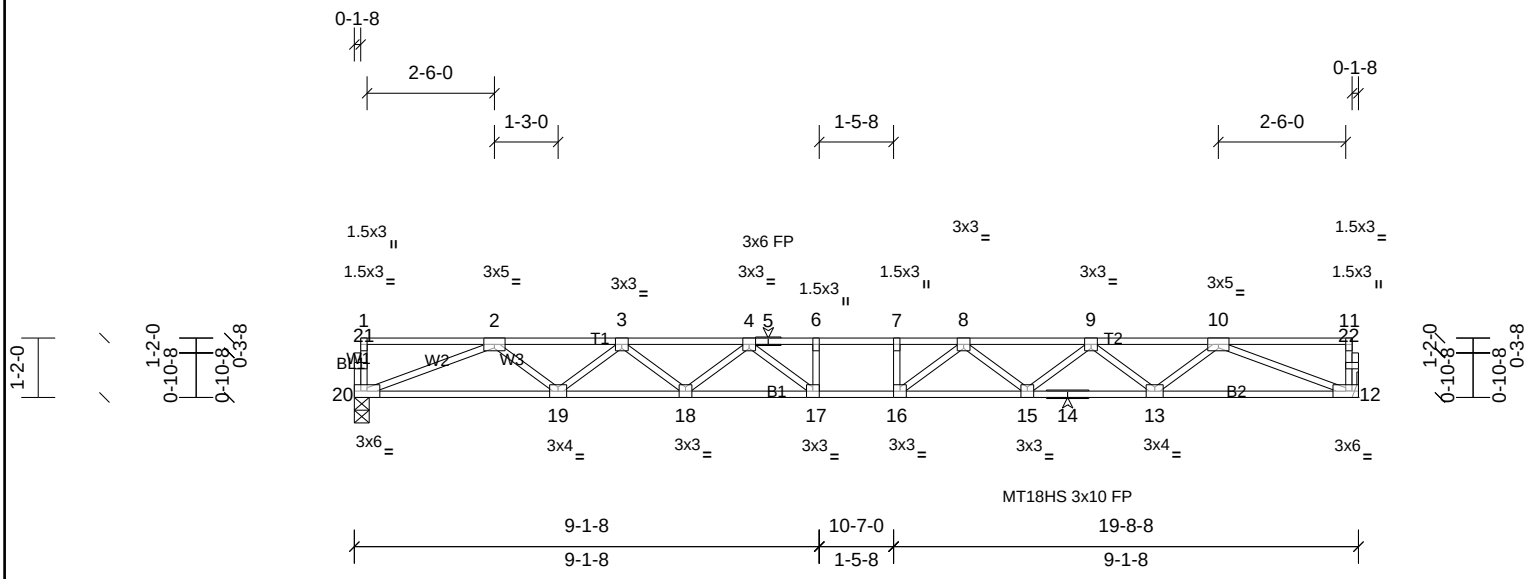

Scale = 1:45.4

Loading	(psf)	Spacing	1-7-3	CSI		DEFL	in	(loc)	l/defl	L/d	PLATES	GRIP
TCLL	40.0	Plate Grip DOL	1.00	TC	0.27	Vert(LL)	-0.31	16-17	>749	480	MT18HS	244/190
TCDL	10.0	Lumber DOL	1.00	BC	0.45	Vert(CT)	-0.43	16-17	>546	360	MT20	244/190
BCLL	0.0	Rep Stress Incr	YES	WB	0.56	Horz(CT)	0.07	12	n/a	n/a		
BCDL	5.0	Code	IRC2015/TPI2014	Matrix-SH							Weight: 97 lb	FT = 20%F, 11%E

LUMBER

TOP CHORD	2x4 SP SS(flat)
BOT CHORD	2x4 SP SS(flat)
WEBS	2x4 SP No.3(flat)
OTHERS	2x4 SP No.3(flat)

BRACING

TOP CHORD	Structural wood sheathing directly applied or 6-0-0 oc purlins, except end verticals.
BOT CHORD	Rigid ceiling directly applied or 10-0-0 oc bracing.

REACTIONS (lb/size) 12=851/ Mechanical, (min. 0-1-8), 20=851/0-3-8, (min. 0-1-8)

FORCES (lb) - Max. Comp./Max. Ten. - All forces 250 (lb) or less except when shown.

TOP CHORD 2-3=-2527/0, 3-4=-3482/0, 4-5=-3963/0, 5-6=-3963/0, 6-7=-3963/0, 7-8=-3963/0, 8-9=-3482/0, 9-10=-2527/0

BOT CHORD 19-20=0/1895, 18-19=0/3125, 17-18=0/3816, 16-17=0/3963, 15-16=0/3816, 14-15=0/3125, 13-14=0/3125, 12-13=0/1895

WEBS 10-12=-2033/0, 2-20=-2033/0, 10-13=0/823, 2-19=0/823, 9-13=-779/0, 3-19=-779/0, 9-15=0/464, 3-18=0/464, 8-15=-436/0, 4-18=-436/0, 8-16=-145/484, 4-17=-145/484

NOTES

1) Unbalanced floor live loads have been considered for this design.
2) All plates are MT20 plates unless otherwise indicated.
3) All plates are 3x3 MT20 unless otherwise indicated.
4) This truss is designed in accordance with the 2015 International Residential Code sections R502.11.1 and R802.10.2 and referenced standard ANSI/TPI 1.
5) Recommend 2x6 strongbacks, on edge, spaced at 10-00-00 oc and fastened to each truss with 3-10d (0.131" X 3") nails. Strongbacks to be attached to walls at their outer ends or restrained by other means.

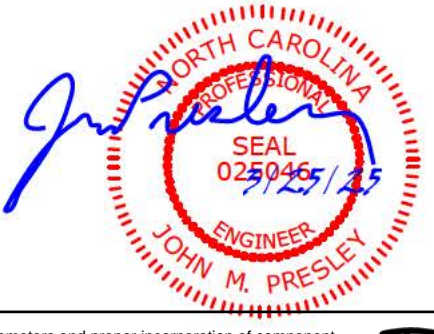

Job	Truss	Truss Type	Qty	Ply	PBS/GUILFORD GEORGIAN RH 2ND FL OW
72507639	2F3	Truss	8	1	Job Reference (optional)

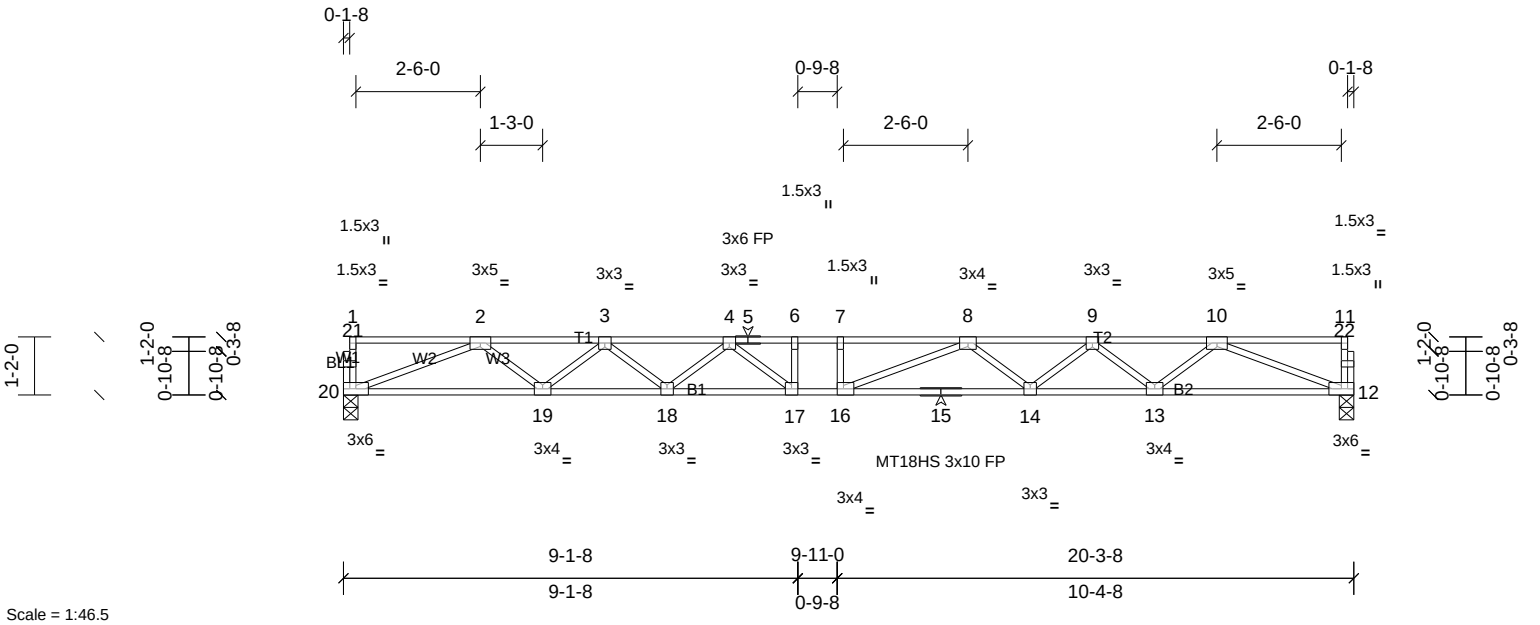

Scale = 1:46.5

Plate Offsets (X, Y): [16:0-1-8,Edge]

Loading	(psf)	Spacing	1-7-3	CSI		DEFL	in	(loc)	l/defl	L/d	PLATES	GRIP
TCLL	40.0	Plate Grip DOL	1.00	TC	0.39	Vert(LL)	-0.36	14-16	>670	480	MT18HS	244/190
TCDL	10.0	Lumber DOL	1.00	BC	0.51	Vert(CT)	-0.50	14-16	>483	360	MT20	244/190
BCLL	0.0	Rep Stress Incr	YES	WB	0.57	Horz(CT)	0.08	12	n/a	n/a		
BCDL	5.0	Code	IRC2015/TPI2014	Matrix-SH							Weight: 100 lb	FT = 20%F, 11%E

LUMBER

TOP CHORD	2x4 SP SS(flat)
BOT CHORD	2x4 SP SS(flat)
WEBS	2x4 SP No.3(flat)
OTHERS	2x4 SP No.3(flat)

BRACING

TOP CHORD	Structural wood sheathing directly applied or 6-0-0 oc purlins, except end verticals.
BOT CHORD	Rigid ceiling directly applied or 10-0-0 oc bracing.

REACTIONS (lb/size) 12=876/0-3-8, (min. 0-1-8), 20=876/0-3-8, (min. 0-1-8)

FORCES (lb) - Max. Comp./Max. Ten. - All forces 250 (lb) or less except when shown.

TOP CHORD 2-3=-2623/0, 3-4=-3632/0, 4-5=-4218/0, 5-6=-4218/0, 6-7=-4218/0, 7-8=-4218/0, 8-9=-3654/0, 9-10=-2618/0

BOT CHORD 19-20=0/1959, 18-19=0/3250, 17-18=0/4007, 16-17=0/4218, 15-16=0/4020, 14-15=0/4020, 13-14=0/3249, 12-13=0/1959

WEBS 10-12=-2102/0, 2-20=-2102/0, 10-13=0/858, 2-19=0/864, 9-13=-821/0, 3-19=-816/0, 9-14=0/528, 3-18=0/497, 8-14=-477/0, 4-18=-488/0, 8-16=-178/533, 4-17=-112/518

NOTES

1) Unbalanced floor live loads have been considered for this design.
2) All plates are MT20 plates unless otherwise indicated.
3) This truss is designed in accordance with the 2015 International Residential Code sections R502.11.1 and R802.10.2 and referenced standard ANSI/TPI 1.
4) Recommend 2x6 strongbacks, on edge, spaced at 10-00-00 oc and fastened to each truss with 3-10d (0.131" X 3") nails. Strongbacks to be attached to walls at their outer ends or restrained by other means.

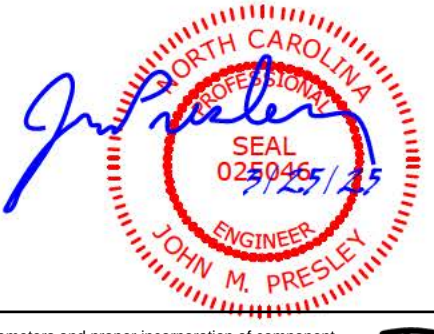

Job	Truss	Truss Type	Qty	Ply	PBS/GUILFORD GEORGIAN RH 2ND FL OW
72507639	2F4	Truss	3	1	Job Reference (optional)

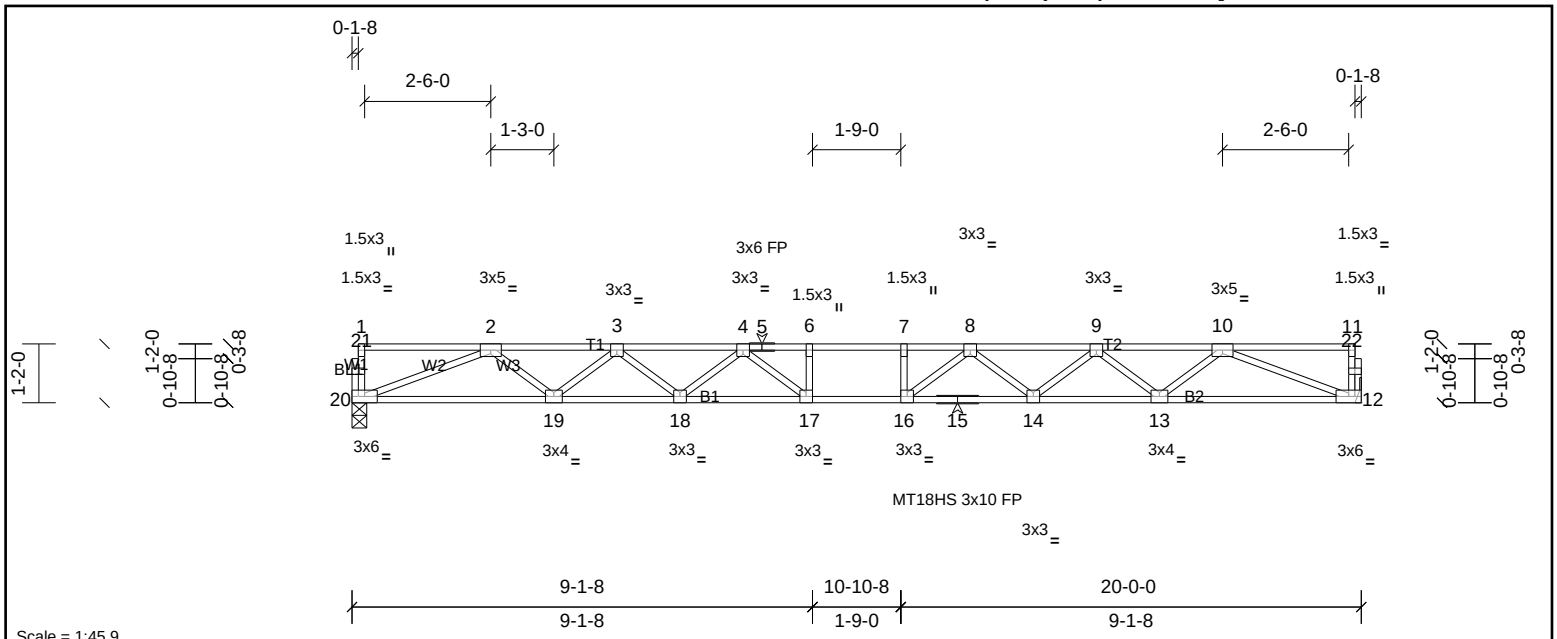

Scale = 1:45.9

Loading	(psf)	Spacing	1-7-3	CSI		DEFL	in	(loc)	l/defl	L/d	PLATES	GRIP
TCLL	40.0	Plate Grip DOL	1.00	TC	0.33	Vert(LL)	-0.33	16-17	>719	480	MT18HS	244/190
TCDL	10.0	Lumber DOL	1.00	BC	0.48	Vert(CT)	-0.45	16-17	>523	360	MT20	244/190
BCLL	0.0	Rep Stress Incr	YES	WB	0.57	Horz(CT)	0.07	12	n/a	n/a		
BCDL	5.0	Code	IRC2015/TPI2014	Matrix-SH							Weight: 98 lb	FT = 20%F, 11%E

LUMBER

TOP CHORD	2x4 SP SS(flat)
BOT CHORD	2x4 SP SS(flat)
WEBS	2x4 SP No.3(flat)
OTHERS	2x4 SP No.3(flat)

BRACING

TOP CHORD	Structural wood sheathing directly applied or 6-0-0 oc purlins, except end verticals.
BOT CHORD	Rigid ceiling directly applied or 10-0-0 oc bracing.

REACTIONS (lb/size) 12=863/ Mechanical, (min. 0-1-8), 20=863/0-3-8, (min. 0-1-8)

FORCES (lb) - Max. Comp./Max. Ten. - All forces 250 (lb) or less except when shown.

TOP CHORD	2-3=-2574/0, 3-4=-3559/0, 4-5=-4078/0, 5-6=-4078/0, 6-7=-4078/0, 7-8=-4078/0, 8-9=-3559/0, 9-10=-2574/0
BOT CHORD	19-20=0/1927, 18-19=0/3188, 17-18=0/3909, 16-17=0/4078, 15-16=0/3909, 14-15=0/3909, 13-14=0/3188, 12-13=0/1927
WEBS	10-12=-2067/0, 2-20=-2067/0, 10-13=0/843, 2-19=0/843, 9-13=-799/0, 3-19=-799/0, 9-14=0/483, 3-18=0/483, 8-14=-455/0, 4-18=-455/0, 8-16=-134/529, 4-17=-134/529

NOTES

1) Unbalanced floor live loads have been considered for this design.
2) All plates are MT20 plates unless otherwise indicated.
3) All plates are 3x3 MT20 unless otherwise indicated.
4) This truss is designed in accordance with the 2015 International Residential Code sections R502.11.1 and R802.10.2 and referenced standard ANSI/TPI 1.
5) Recommend 2x6 strongbacks, on edge, spaced at 10-00-00 oc and fastened to each truss with 3-10d (0.131" X 3") nails. Strongbacks to be attached to walls at their outer ends or restrained by other means.

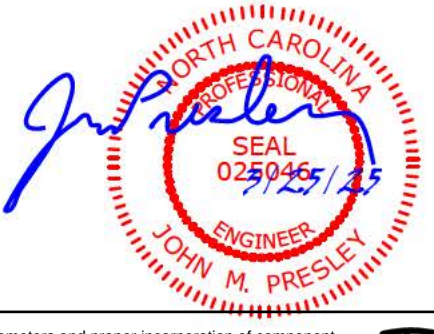

Job	Truss	Truss Type	Qty	Ply	PBS/GUILFORD GEORGIAN RH 2ND FL OW
72507639	2F5	Truss	5	1	Job Reference (optional)

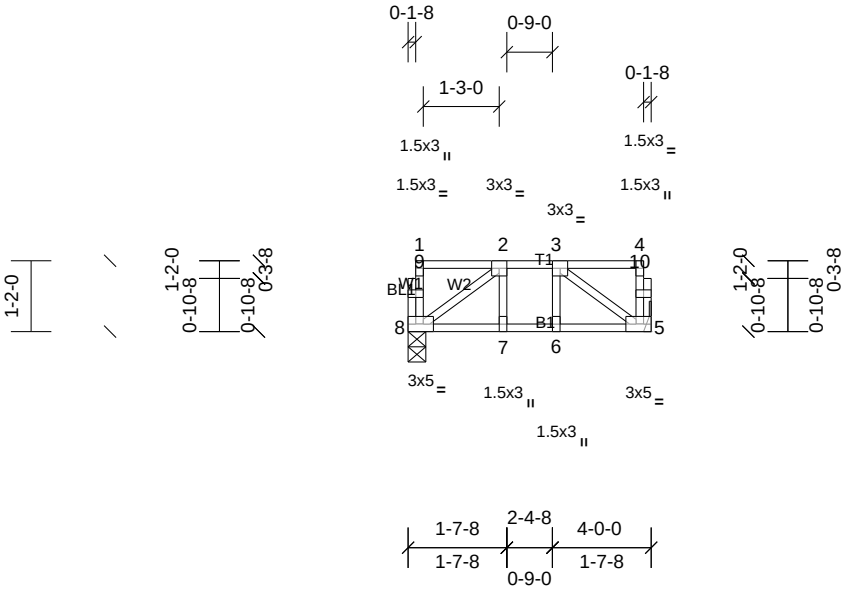

Scale = 1:38.1

Plate Offsets (X, Y): [5:0-2-0,Edge], [8:0-2-0,Edge]

Loading	(psf)	Spacing	1-7-3	CSI		DEFL	in	(loc)	l/defl	L/d	PLATES	GRIP
TCLL	40.0	Plate Grip DOL	1.00	TC	0.09	Vert(LL)	0.00	7-8	>999	480	MT20	244/190
TCDL	10.0	Lumber DOL	1.00	BC	0.07	Vert(CT)	0.00	7-8	>999	360		
BCLL	0.0	Rep Stress Incr	YES	WB	0.04	Horz(CT)	0.00	5	n/a	n/a		
BCDL	5.0	Code	IRC2015/TPI2014	Matrix-SH							Weight: 24 lb	FT = 20%F, 11%E

LUMBER

TOP CHORD	2x4 SP No.2(flat)
BOT CHORD	2x4 SP No.2(flat)
WEBS	2x4 SP No.3(flat)
OTHERS	2x4 SP No.3(flat)

BRACING

TOP CHORD	Structural wood sheathing directly applied or 4-0-0 oc purlins, except end verticals.
BOT CHORD	Rigid ceiling directly applied or 10-0-0 oc bracing.

REACTIONS (lb/size) 5=160/ Mechanical, (min. 0-1-8), 8=160/0-3-8, (min. 0-1-8)

FORCES (lb) - Max. Comp./Max. Ten. - All forces 250 (lb) or less except when shown.

NOTES

1) Unbalanced floor live loads have been considered for this design.
2) This truss is designed in accordance with the 2015 International Residential Code sections R502.11.1 and R802.10.2 and referenced standard ANSI/TPI 1.
3) Recommend 2x6 strongbacks, on edge, spaced at 10-00-00 oc and fastened to each truss with 3-10d (0.131" X 3") nails. Strongbacks to be attached to walls at their outer ends or restrained by other means.

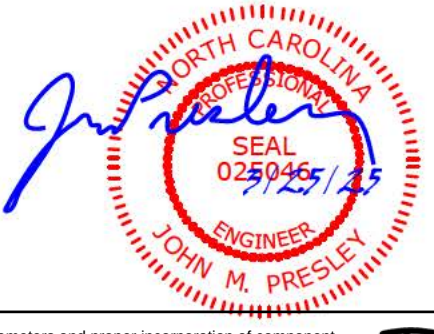

Job	Truss	Truss Type	Qty	Ply	PBS/GUILFORD GEORGIAN RH 2ND FL OW
72507639	2FG1	Truss	1	1	Job Reference (optional)

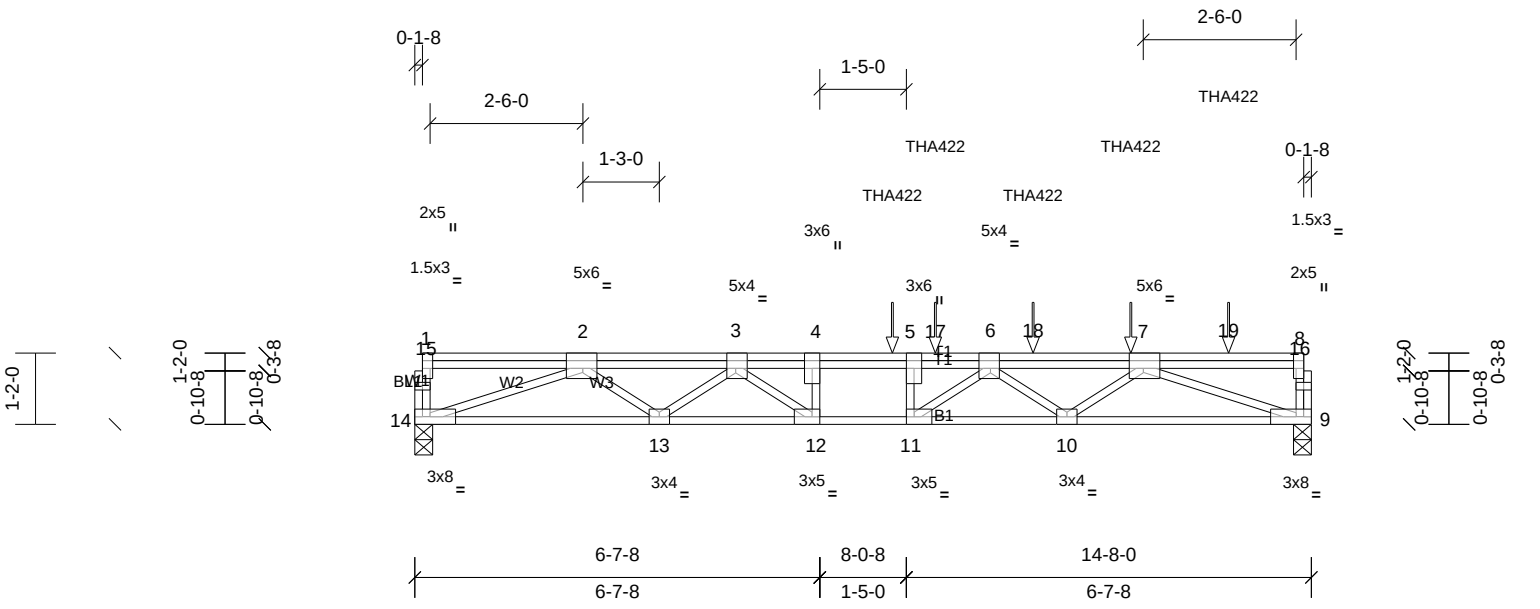

Scale = 1:37.9

Plate Offsets (X, Y): [2:0-2-12,Edge], [3:0-1-12,Edge], [5:0-3-0,Edge], [6:0-1-12,Edge], [7:0-2-12,Edge], [8:0-3-0,Edge], [11:0-1-8,Edge], [12:0-1-8,Edge]

Loading	(psf)	Spacing	2-0-0	CSI		DEFL	in	(loc)	l/defl	L/d	PLATES	GRIP
TCLL	40.0	Plate Grip DOL	1.00	TC	0.55	Vert(LL)	-0.19	10-11	>928	480	MT20	244/190
TCDL	10.0	Lumber DOL	1.00	BC	0.94	Vert(CT)	-0.26	10-11	>672	360		
BCLL	0.0	Rep Stress Incr	NO	WB	0.76	Horz(CT)	0.06	9	n/a	n/a		
BCDL	5.0	Code	IRC2015/TPI2014	Matrix-SH							Weight: 93 lb	FT = 20%F, 11%E

LUMBER

TOP CHORD	2x4 SP No.2(flat)
BOT CHORD	2x4 SP No.1(flat)
WEBS	2x4 SP No.3(flat)
OTHERS	2x4 SP No.3(flat)

BRACING

TOP CHORD	Structural wood sheathing directly applied or 6-0-0 oc purlins, except end verticals.
BOT CHORD	Rigid ceiling directly applied or 10-0-0 oc bracing.

REACTIONS (lb/size) 9=1071/0-3-8, (min. 0-1-8), 14=902/0-3-8, (min. 0-1-8)
Max Grav 9=1184 (LC 4), 14=902 (LC 1)

FORCES (lb) - Max. Comp./Max. Ten. - All forces 250 (lb) or less except when shown.

TOP CHORD	2-3=-2683/0, 3-4=-3709/0, 4-5=-3709/0, 5-17=-3709/0, 6-17=-3709/0, 6-18=-3232/0, 7-18=-3232/0
BOT CHORD	13-14=0/2060, 12-13=0/3266, 11-12=0/3709, 10-11=0/3758, 9-10=0/2639
WEBS	7-9=-2803/0, 2-14=-2191/0, 7-10=0/790, 2-13=0/791, 6-10=-721/0, 3-13=-754/0, 6-11=-270/507, 3-12=0/1059, 4-12=-555/0, 5-11=-283/117

NOTES

1) Unbalanced floor live loads have been considered for this design.
2) This truss is designed in accordance with the 2015 International Residential Code sections R502.11.1 and R802.10.2 and referenced standard ANSI/TPI 1.
3) Recommend 2x6 strongbacks, on edge, spaced at 10-00-00 oc and fastened to each truss with 3-10d (0.131" X 3") nails. Strongbacks to be attached to walls at their outer ends or restrained by other means.
4) Use Simpson Strong-Tie THA422 (6-16d Girder, 6-10d Truss) or equivalent spaced at 1-7-3 oc max. starting at 7-9-12 from the left end to 13-3-12 to connect truss(es) to back face of top chord.
5) Fill all nail holes where hanger is in contact with lumber.
6) In the LOAD CASE(S) section, loads applied to the face of the truss are noted as front (F) or back (B).

LOAD CASE(S) Standard

1) Dead + Floor Live (balanced): Lumber Increase=1.00, Plate Increase=1.00
   Uniform Loads (lb/ft)
   Vert: 9-14=-10, 1-8=-100
   Concentrated Loads (lb)
   Vert: 7=-80 (B), 5=-80 (B), 17=-80 (B), 18=-80 (B), 19=-80 (B)

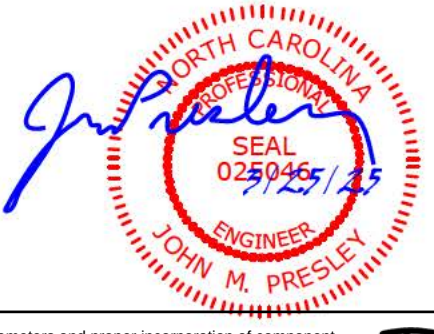

Job	Truss	Truss Type	Qty	Ply	PBS/GUILFORD GEORGIAN RH 2ND FL OW
72507639	2KW1	Truss	1	1	Job Reference (optional)

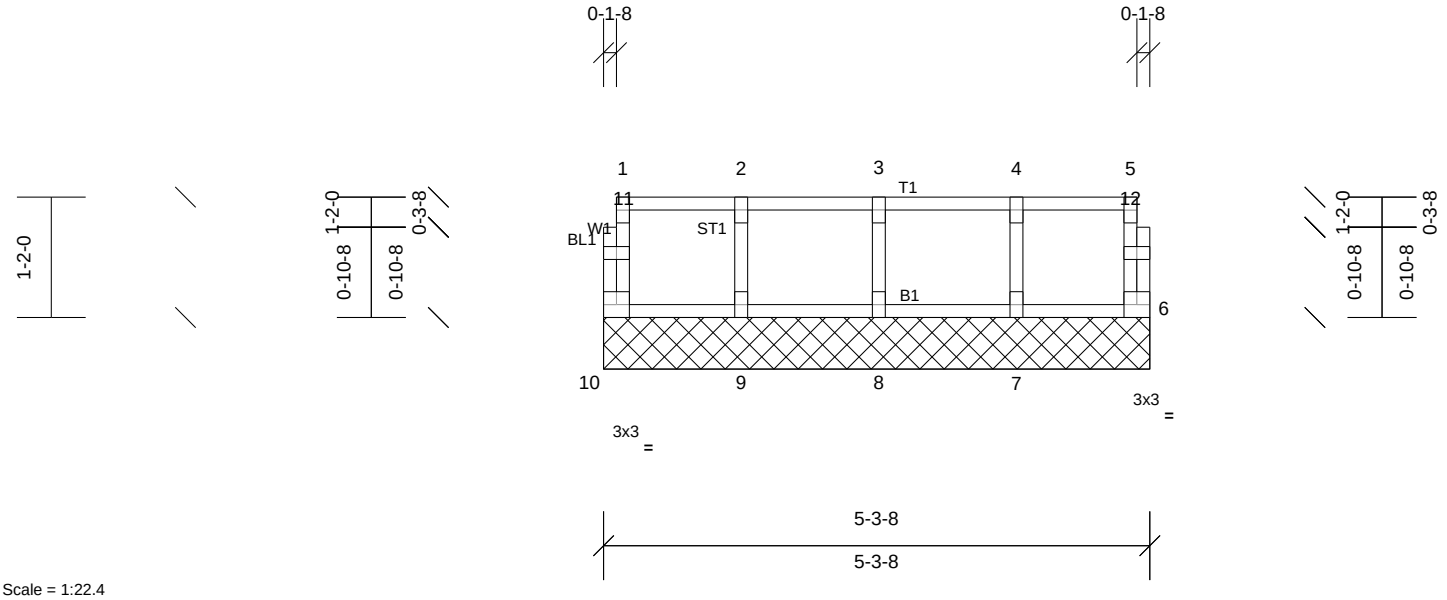

Scale = 1:22.4

Loading	(psf)	Spacing	1-7-3	CSI		DEFL	in	(loc)	l/defl	L/d	PLATES	GRIP
TCLL	40.0	Plate Grip DOL	1.00	TC	0.06	Vert(LL)	n/a	-	n/a	999	MT20	244/190
TCDL	10.0	Lumber DOL	1.00	BC	0.01	Vert(TL)	n/a	-	n/a	999		
BCLL	0.0	Rep Stress Incr	YES	WB	0.02	Horiz(TL)	0.00	6	n/a	n/a		
BCDL	5.0	Code	IRC2015/TPI2014	Matrix-R							Weight: 24 lb	FT = 20%F, 11%E

LUMBER

TOP CHORD	2x4 SP No.2(flat)
BOT CHORD	2x4 SP No.2(flat)
WEBS	2x4 SP No.3(flat)
OTHERS	2x4 SP No.3(flat)

BRACING

TOP CHORD	Structural wood sheathing directly applied or 5-3-8 oc purlins, except end verticals.
BOT CHORD	Rigid ceiling directly applied or 10-0-0 oc bracing.

REACTIONS All bearings 5-3-8.
(lb) - Max Grav All reactions 250 (lb) or less at joint(s) 6, 7, 8, 9, 10

FORCES (lb) - Max. Comp./Max. Ten. - All forces 250 (lb) or less except when shown.

NOTES

1) All plates are 1.5x3 MT20 unless otherwise indicated.
2) Gable requires continuous bottom chord bearing.
3) Truss to be fully sheathed from one face or securely braced against lateral movement (i.e. diagonal web).
4) Gable studs spaced at 1-4-0 oc.
5) This truss is designed in accordance with the 2015 International Residential Code sections R502.11.1 and R802.10.2 and referenced standard ANSI/TPI 1.
6) Recommend 2x6 strongbacks, on edge, spaced at 10-00-00 oc and fastened to each truss with 3-10d (0.131" X 3") nails. Strongbacks to be attached to walls at their outer ends or restrained by other means.

NORTH CAROLINA PROFESSIONAL SEAL 025046 ENGINEER JOHN M. PRESLEY
9/25/25

Job	Truss	Truss Type	Qty	Ply	PBS/GUILFORD GEORGIAN RH 2ND FL OW
72507639	2KW2	Truss	1	1	Job Reference (optional)

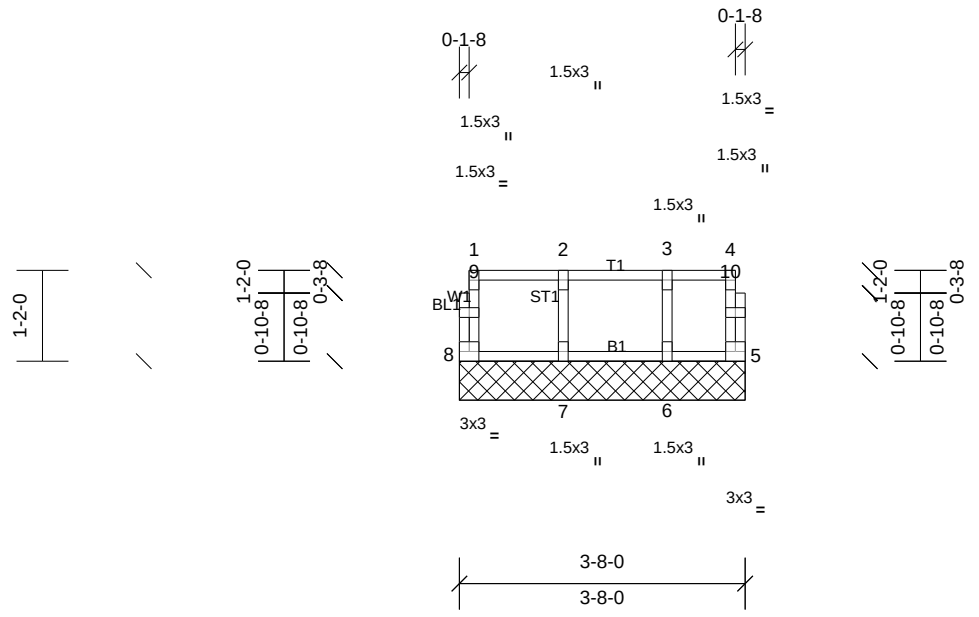

Scale = 1:29.7

Loading	(psf)	Spacing	1-7-3	CSI		DEFL	in	(loc)	l/defl	L/d	PLATES	GRIP
TCLL	40.0	Plate Grip DOL	1.00	TC	0.06	Vert(LL)	n/a	-	n/a	999	MT20	244/190
TCDL	10.0	Lumber DOL	1.00	BC	0.01	Vert(TL)	n/a	-	n/a	999		
BCLL	0.0	Rep Stress Incr	YES	WB	0.02	Horiz(TL)	0.00	5	n/a	n/a		
BCDL	5.0	Code	IRC2015/TPI2014	Matrix-R							Weight: 18 lb	FT = 20%F, 11%E

LUMBER

TOP CHORD	2x4 SP No.2(flat)
BOT CHORD	2x4 SP No.2(flat)
WEBS	2x4 SP No.3(flat)
OTHERS	2x4 SP No.3(flat)

BRACING

TOP CHORD	Structural wood sheathing directly applied or 3-8-0 oc purlins, except end verticals.
BOT CHORD	Rigid ceiling directly applied or 10-0-0 oc bracing.

REACTIONS All bearings 3-8-0.
(lb) - Max Grav All reactions 250 (lb) or less at joint(s) 5, 6, 7, 8

FORCES (lb) - Max. Comp./Max. Ten. - All forces 250 (lb) or less except when shown.

NOTES

1) All plates are 1.5x3 MT20 unless otherwise indicated.
2) Gable requires continuous bottom chord bearing.
3) Truss to be fully sheathed from one face or securely braced against lateral movement (i.e. diagonal web).
4) Gable studs spaced at 1-4-0 oc.
5) This truss is designed in accordance with the 2015 International Residential Code sections R502.11.1 and R802.10.2 and referenced standard ANSI/TPI 1.
6) Recommend 2x6 strongbacks, on edge, spaced at 10-00-00 oc and fastened to each truss with 3-10d (0.131" X 3") nails. Strongbacks to be attached to walls at their outer ends or restrained by other means.

NORTH CAROLINA PROFESSIONAL SEAL 025046 ENGINEER JOHN M. PRESLEY
3/25/25

THIS IS A TRUSS PLACEMENT DIAGRAM (TPD) ONLY; NOT AN ENGINEERED DOCUMENT. Trusses are designed as individual building components to be incorporated into the building design at the specification of the building designer. See individual truss design drawings (TDD's) for each truss design identified on the TPD. The Contractor is responsible for the temporary bracing of the roof and floor system, and requirements for the permanent restraint/bracing of truss systems may be met by following the methods outlined in ANSI-TPI 1-2014 - 2.3.3. The design of the support structure including but not limited to headers, beams, walls, and columns is also the responsibility of the building designer. For general guidance regarding installation and bracing, consult "Building Component Safety Information" (BCSI) available from the SBC Association (www.sbcacomponents.com). It is the responsibility of the General Contractor to verify that the provided component layout matches the final intended construction plans, loading conditions, and use. If they do not, it is the responsibility of the General Contractor to notify UFP and provide plans containing the latest specifications and designs. UFP will not be responsible for plan changes by others after final approval of shop drawings, or for errors or modifications made on-site during construction. DO NOT CUT, NOTCH, DRILL, OR OTHERWISE "REPAIR" MANUFACTURED TRUSSES IN ANY WAY WITHOUT PRIOR WRITTEN AUTHORIZATION BY A LICENSED PROFESSIONAL DESIGNATED BY UFP. The Framer is responsible to verify all dimensions, including adjusting member spacing within tolerances to allow for the drop and rise of plumbing/HVAC, unless noted otherwise. Truss-to-wall connections, if shown, are for uplift only and do not consider lateral loads. All connectors on this project are to be installed per the connector manufacturer's specifications. All connectors shown that are not truss-to-truss are suggestions only and are to be verified by the Building Designer or Engineer of Record for suitability to this particular project. UFP accepts no responsibility for the specific application or suitability of any connector that is not truss-to-truss as they apply to this specific structure.

PLACEMENT PLAN

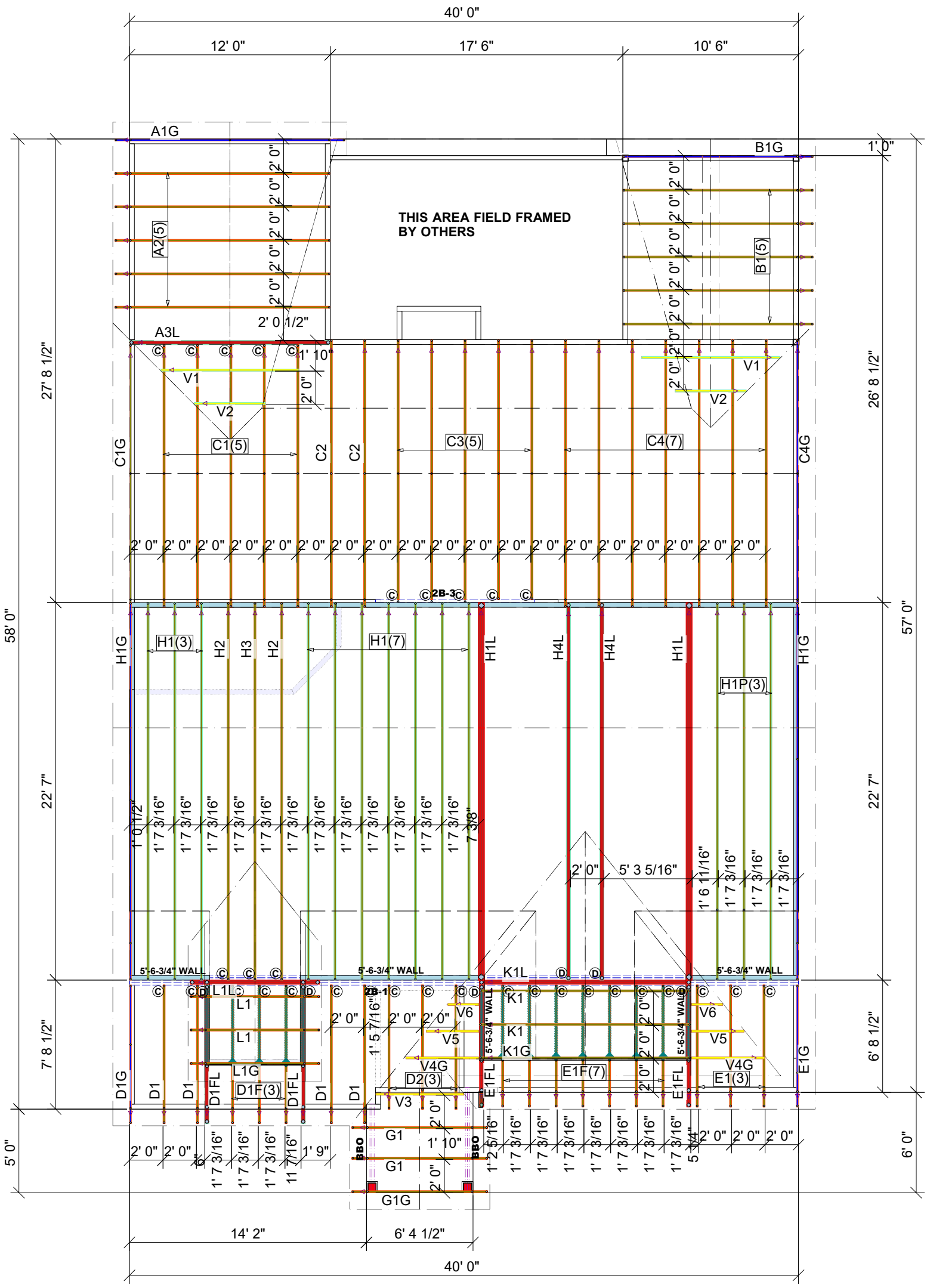

ROOF HANGER LIST		
C	HUS26	33
D	HHUS26-2	6

UNLESS NOTED OTHERWISE USE SINGLE H2.5A TIEDOWN.

△ INDICATES LEFT END OF TRUSS

SCALE: N.T.S

ROOF AREA:	3063.35 sqft	RIDGE LINE:	114.99 ft	VALLEY LINES:	124.72 ft	HIP LINES:	0 ft	THESE VALUES ARE APPROXIMATE ONLY

JOB #: 25030967

DESIGNER AM
LAYOUT DATE 3-18-25
ARCH DATE -
STRUC DATE -

REVISIONS

DATE	DESCRIPTION	DSN
-	-	-
-	-	-
-	-	-
-	-	-
-	-	-
-	-	-
-	-	-
-	-	-

GUILFORD GEORGIAN ROOF

477 BEACON HILL RD.
LILLINGTON, NC 27546

PBS/NEW HOMES INC.

LOT 29 DUNCAN'S CREEK

TRUSSTRAX UFPCONSTRUCTION
TrussTrax.ufpi.com

UFP SITE BUILT
A UFP INDUSTRIES COMPANY
Burlington, NC Locust, NC
Chesapeake, VA Liberty, NC
Clinton, NC Ooltewah, TN
Conway, SC Pearisburg, VA
Jefferson, GA Stanfield, NC
Customer Service (800) 476-9356

Job	Truss	Truss Type	Qty	Ply	PBS/GUILFORD GEORGIAN RH ROOF
72507638	A1G	Truss	1	1	Job Reference (optional)

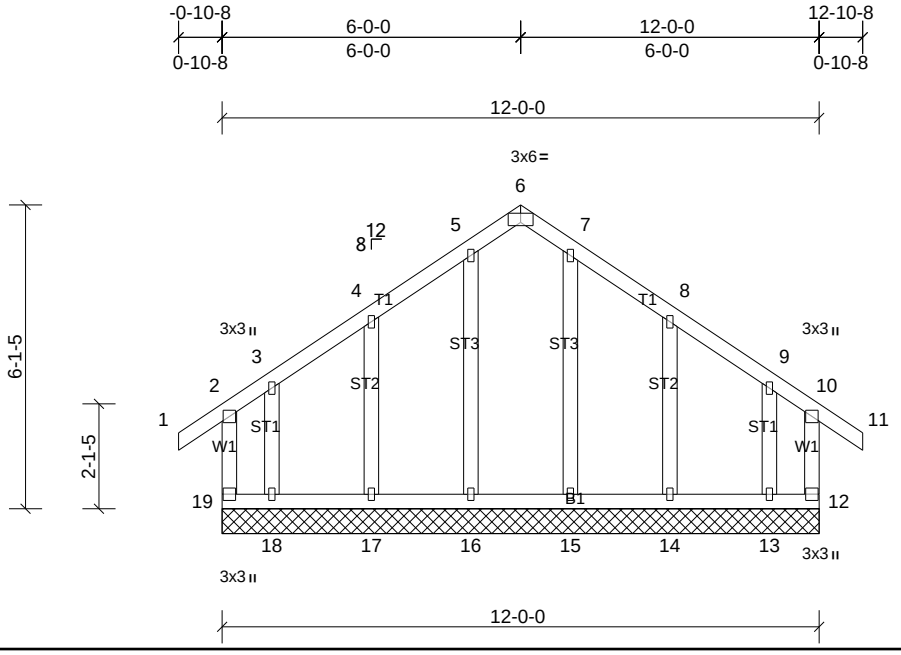

Plate Offsets (X, Y): [6:0-3-0,Edge]

Loading	(psf)	Spacing	2-0-0	CSI		DEFL	in	(loc)	l/defl	L/d	PLATES	GRIP
TCLL (roof)	20.0	Plate Grip DOL	1.15	TC	0.23	Vert(LL)	n/a	-	n/a	999	MT20	244/190
TCDL	10.0	Lumber DOL	1.15	BC	0.13	Vert(CT)	n/a	-	n/a	999		
BCLL	0.0 *	Rep Stress Incr	YES	WB	0.06	Horz(CT)	0.00	12	n/a	n/a		
BCDL	10.0	Code	IRC2015/TPI2014	Matrix-MR							Weight: 80 lb	FT = 20%

LUMBER

TOP CHORD	2x4 SP No.2
BOT CHORD	2x4 SP No.2
WEBS	2x4 SP No.3
OTHERS	2x4 SP No.3

BRACING

TOP CHORD	Structural wood sheathing directly applied or 6-0-0 oc purlins, except end verticals.
BOT CHORD	Rigid ceiling directly applied or 6-0-0 oc bracing.

REACTIONS All bearings 12-0-0.

(lb) - Max Horiz 19=-190 (LC 8)

Max Uplift All uplift 100 (lb) or less at joint(s) 14, 17 except 12=-195 (LC 7), 13=-198 (LC 6), 18=-206 (LC 7), 19=-204 (LC 6)

Max Grav All reactions 250 (lb) or less at joint(s) 12, 14, 15, 16, 17, 19 except 13=281 (LC 9), 18=289 (LC 8)

FORCES (lb) - Max. Comp./Max. Ten. - All forces 250 (lb) or less except when shown.

NOTES

1) Unbalanced roof live loads have been considered for this design.
2) Wind: ASCE 7-10; Vult=130mph (3-second gust) Vasd=103mph; TCDL=6.0psf; BCDL=6.0psf; h=35ft; Cat. II; Exp B; Enclosed; MWFRS (envelope) exterior zone and C-C Corner (3) -0-10-8 to 2-1-8, Exterior (2) 2-1-8 to 3-0-0, Corner (3) 3-0-0 to 9-0-0, Exterior (2) 9-0-0 to 9-10-8, Corner (3) 9-10-8 to 12-10-8 zone; cantilever left and right exposed ; end vertical left and right exposed;C-C for members and forces & MWFRS for reactions shown; Lumber DOL=1.60 plate grip DOL=1.60
3) Truss designed for wind loads in the plane of the truss only.
4) All plates are 1.5x3 MT20 unless otherwise indicated.
5) Gable requires continuous bottom chord bearing.
6) Truss to be fully sheathed from one face or securely braced against lateral movement (i.e. diagonal web).
7) Gable studs spaced at 2-0-0 oc.
8) This truss has been designed for a 10.0 psf bottom chord live load nonconcurrent with any other live loads.
9) * This truss has been designed for a live load of 20.0psf on the bottom chord in all areas where a rectangle 3-06-00 tall by 2-00-00 wide will fit between the bottom chord and any other members.
10) Provide mechanical connection (by others) of truss to bearing plate capable of withstanding 100 lb uplift at joint(s) 17, 14 except (jt=lb) 19=204, 12=195, 18=205, 13=198.
11) This truss is designed in accordance with the 2015 International Residential Code sections R502.11.1 and R802.10.2 and referenced standard ANSI/TPI 1.

Job	Truss	Truss Type	Qty	Ply	PBS/GUILFORD GEORGIAN RH ROOF
72507638	A2	Truss	5	1	Job Reference (optional)

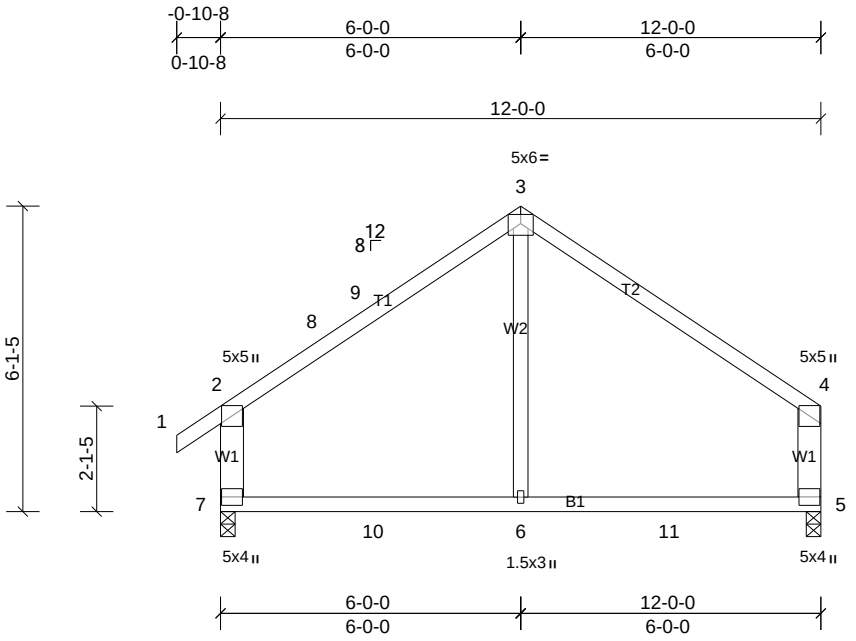

Loading	(psf)	Spacing	2-0-0	CSI		DEFL	in	(loc)	l/defl	L/d	PLATES	GRIP
TCLL (roof)	20.0	Plate Grip DOL	1.15	TC	0.70	Vert(LL)	-0.13	6-7	>999	240	MT20	244/190
TCDL	10.0	Lumber DOL	1.15	BC	0.60	Vert(CT)	-0.22	6-7	>627	180		
BCLL	0.0 *	Rep Stress Incr	YES	WB	0.09	Horz(CT)	0.00	5	n/a	n/a		
BCDL	10.0	Code	IRC2015/TPI2014	Matrix-MR							Weight: 58 lb	FT = 20%

LUMBER

TOP CHORD	2x4 SP No.2
BOT CHORD	2x4 SP No.2
WEBS	2x6 SP No.2 *Except* W2:2x4 SP No.3

BRACING

TOP CHORD	Structural wood sheathing directly applied or 6-0-0 oc purlins, except end verticals.
BOT CHORD	Rigid ceiling directly applied or 10-0-0 oc bracing.

REACTIONS (lb/size) 5=458/0-3-8, (min. 0-1-8), 7=531/0-3-8, (min. 0-1-8)
Max Horiz 7=185 (LC 9)
Max Uplift 5=-54 (LC 11), 7=-75 (LC 10)
Max Grav 5=499 (LC 17), 7=563 (LC 17)

FORCES (lb) - Max. Comp./Max. Ten. - All forces 250 (lb) or less except when shown.
TOP CHORD 2-8=-456/117, 8-9=-404/122, 3-9=-380/143, 3-4=-447/142, 2-7=-454/192, 4-5=-378/142
BOT CHORD 7-10=-35/313, 6-10=-35/313, 6-11=-35/313, 5-11=-35/313

NOTES

1) Unbalanced roof live loads have been considered for this design.
2) Wind: ASCE 7-10; Vult=130mph (3-second gust) Vasd=103mph; TCDL=6.0psf; BCDL=6.0psf; h=35ft; Cat. II; Exp B; Enclosed; MWFRS (envelope) exterior zone and C-C Exterior (2) -0-10-8 to 2-1-8, Interior (1) 2-1-8 to 3-0-0, Exterior (2) 3-0-0 to 11-9-4 zone; cantilever left and right exposed ; end vertical left and right exposed;C-C for members and forces & MWFRS for reactions shown; Lumber DOL=1.60 plate grip DOL=1.60
3) This truss has been designed for a 10.0 psf bottom chord live load nonconcurrent with any other live loads.
4) * This truss has been designed for a live load of 20.0psf on the bottom chord in all areas where a rectangle 3-06-00 tall by 2-00-00 wide will fit between the bottom chord and any other members, with BCDL = 10.0psf.
5) Provide mechanical connection (by others) of truss to bearing plate capable of withstanding 75 lb uplift at joint 7 and 54 lb uplift at joint 5.
6) This truss is designed in accordance with the 2015 International Residential Code sections R502.11.1 and R802.10.2 and referenced standard ANSI/TPI 1.

Job	Truss	Truss Type	Qty	Ply	PBS/GUILFORD GEORGIAN RH ROOF
72507638	A3L	Truss	1	**2**	Job Reference (optional)

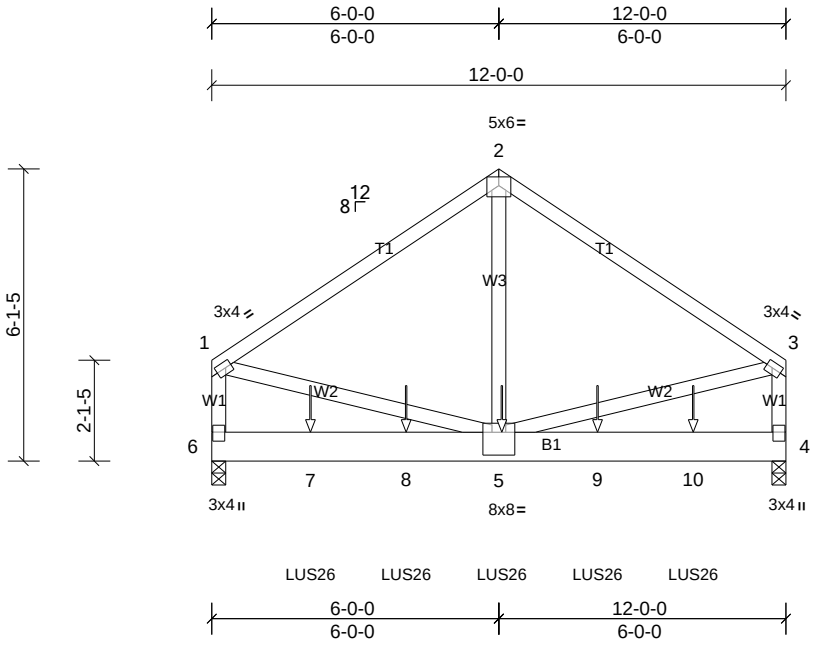

Plate Offsets (X, Y): [1:0-1-8,0-1-8], [3:0-1-8,0-1-8], [4:0-1-12,0-1-8], [5:0-4-0,0-5-12], [6:0-1-12,0-1-8]

Loading	(psf)	**Spacing**	2-0-0	**CSI**		**DEFL**	in	(loc)	l/defl	L/d	**PLATES**	**GRIP**
TCLL (roof)	20.0	Plate Grip DOL	1.15	TC	0.35	Vert(LL)	-0.02	5-6	>999	240	MT20	244/190
TCDL	10.0	Lumber DOL	1.15	BC	0.33	Vert(CT)	-0.04	5-6	>999	180		
BCLL	0.0 *	Rep Stress Incr	NO	WB	0.30	Horz(CT)	0.00	4	n/a	n/a		
BCDL	10.0	Code	IRC2015/TPI2014	Matrix-MSH							Weight: 175 lb	FT = 20%

LUMBER

TOP CHORD	2x4 SP No.2
BOT CHORD	2x8 SP No.2
WEBS	2x4 SP No.3

BRACING

TOP CHORD	Structural wood sheathing directly applied or 6-0-0 oc purlins, except end verticals.
BOT CHORD	Rigid ceiling directly applied or 10-0-0 oc bracing.

REACTIONS (lb/size) 4=1949/0-3-8, (min. 0-1-8), 6=1924/0-3-8, (min. 0-1-8)
Max Horiz 6=-166 (LC 4)

FORCES (lb) - Max. Comp./Max. Ten. - All forces 250 (lb) or less except when shown.

TOP CHORD	1-2=-1701/0, 2-3=-1701/0, 1-6=-1414/0, 3-4=-1414/0
BOT CHORD	6-7=-146/257, 7-8=-146/257, 5-8=-146/257
WEBS	2-5=0/1458, 1-5=0/1235, 3-5=0/1235

NOTES

1) 2-ply truss to be connected together with 10d (0.131"x3") nails as follows:
Top chords connected as follows: 2x4 - 1 row at 0-9-0 oc.
Bottom chords connected as follows: 2x8 - 2 rows staggered at 0-9-0 oc.
Web connected as follows: 2x4 - 1 row at 0-9-0 oc.
2) All loads are considered equally applied to all plies, except if noted as front (F) or back (B) face in the LOAD CASE(S) section. Ply to ply connections have been provided to distribute only loads noted as (F) or (B), unless otherwise indicated.
3) Unbalanced roof live loads have been considered for this design.
4) Wind: ASCE 7-10; Vult=130mph (3-second gust) Vasd=103mph; TCDL=6.0psf; BCDL=6.0psf; h=35ft; Cat. II; Exp B; Enclosed; MWFRS (envelope) exterior zone; cantilever left and right exposed ; end vertical left and right exposed; Lumber DOL=1.60 plate grip DOL=1.60
5) This truss has been designed for a 10.0 psf bottom chord live load nonconcurrent with any other live loads.
6) * This truss has been designed for a live load of 20.0psf on the bottom chord in all areas where a rectangle 3-06-00 tall by 2-00-00 wide will fit between the bottom chord and any other members.
7) This truss is designed in accordance with the 2015 International Residential Code sections R502.11.1 and R802.10.2 and referenced standard ANSI/TPI 1.
8) Use Simpson Strong-Tie LUS26 (4-10d Girder, 3-10d Truss, Single Ply Girder) or equivalent spaced at 2-0-0 oc max. starting at 2-0-12 from the left end to 10-0-12 to connect truss(es) to front face of bottom chord.
9) Fill all nail holes where hanger is in contact with lumber.

LOAD CASE(S) Standard

1) Dead + Roof Live (balanced): Lumber Increase=1.15, Plate Increase=1.15
Uniform Loads (lb/ft)
Vert: 1-2=-60, 2-3=-60, 4-6=-20
Concentrated Loads (lb)
Vert: 5=-587, 7=-587, 8=-587, 9=-587, 10=-587

Job	Truss	Truss Type	Qty	Ply	PBS/GUILFORD GEORGIAN RH ROOF
72507638	B1	Truss	5	1	Job Reference (optional)

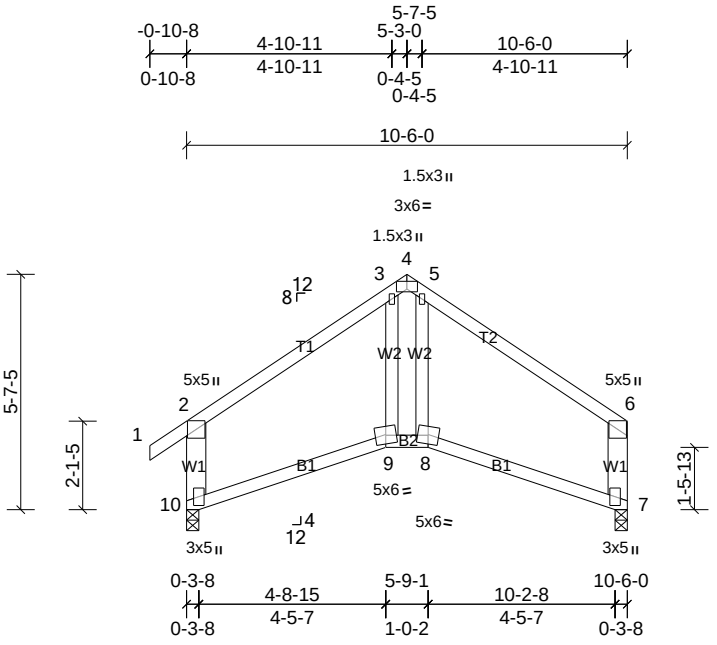

Plate Offsets (X, Y): [4:0-3-0,Edge], [7:0-3-11,0-2-0], [10:0-3-11,0-2-0]

Loading	(psf)	Spacing	2-0-0	CSI		DEFL	in	(loc)	l/defl	L/d	PLATES	GRIP
TCLL (roof)	20.0	Plate Grip DOL	1.15	TC	0.70	Vert(LL)	-0.12	8	>988	240	MT20	244/190
TCDL	10.0	Lumber DOL	1.15	BC	0.61	Vert(CT)	-0.24	8-9	>496	180		
BCLL	0.0 *	Rep Stress Incr	YES	WB	0.06	Horz(CT)	0.16	7	n/a	n/a		
BCDL	10.0	Code	IRC2015/TPI2014	Matrix-MR							Weight: 56 lb	FT = 20%

LUMBER

TOP CHORD	2x4 SP No.2
BOT CHORD	2x4 SP No.2
WEBS	2x4 SP No.3 *Except* W1:2x6 SP No.2

BRACING

TOP CHORD	Structural wood sheathing directly applied or 6-0-0 oc purlins, except end verticals.
BOT CHORD	Rigid ceiling directly applied or 10-0-0 oc bracing.

REACTIONS (lb/size) 7=398/0-3-8, (min. 0-1-8), 10=472/0-3-8, (min. 0-1-8)
Max Horiz 10=173 (LC 7)
Max Uplift 7=-47 (LC 11), 10=-68 (LC 10)

FORCES (lb) - Max. Comp./Max. Ten. - All forces 250 (lb) or less except when shown.
TOP CHORD 2-3=-410/119, 4-5=-262/146, 5-6=-393/118, 2-10=-454/165, 6-7=-360/111
BOT CHORD 9-10=-72/287, 8-9=-54/268, 7-8=-60/274

NOTES

1) Unbalanced roof live loads have been considered for this design.
2) Wind: ASCE 7-10; Vult=130mph (3-second gust) Vasd=103mph; TCDL=6.0psf; BCDL=6.0psf; h=35ft; Cat. II; Exp B; Enclosed; MWFRS (envelope) exterior zone and C-C Exterior (2) zone; cantilever left and right exposed ; end vertical left and right exposed;C-C for members and forces & MWFRS for reactions shown; Lumber DOL=1.60 plate grip DOL=1.60
3) This truss has been designed for a 10.0 psf bottom chord live load nonconcurrent with any other live loads.
4) * This truss has been designed for a live load of 20.0psf on the bottom chord in all areas where a rectangle 3-06-00 tall by 2-00-00 wide will fit between the bottom chord and any other members.
5) Bearing at joint(s) 10, 7 considers parallel to grain value using ANSI/TPI 1 angle to grain formula. Building designer should verify capacity of bearing surface.
6) Provide mechanical connection (by others) of truss to bearing plate capable of withstanding 68 lb uplift at joint 10 and 47 lb uplift at joint 7.
7) This truss is designed in accordance with the 2015 International Residential Code sections R502.11.1 and R802.10.2 and referenced standard ANSI/TPI 1.

NORTH CAROLINA PROFESSIONAL SEAL 054919 ENGINEER HUNTER B. DOSS
3/24/2025

Job	Truss	Truss Type	Qty	Ply	PBS/GUILFORD GEORGIAN RH ROOF
72507638	B1G	Truss	1	1	Job Reference (optional)

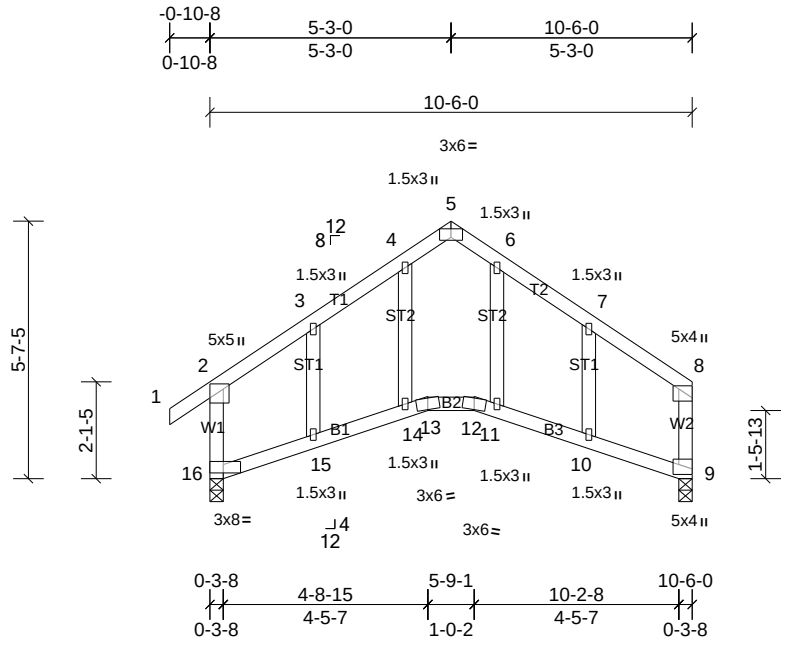

Plate Offsets (X, Y): [5:0-3-0,Edge], [16:0-3-8,Edge]

Loading	(psf)	Spacing	2-0-0	CSI		DEFL	in	(loc)	l/defl	L/d	PLATES	GRIP
TCLL (roof)	20.0	Plate Grip DOL	1.15	TC	0.95	Vert(LL)	-0.13	12-13	>928	240	MT20	244/190
TCDL	10.0	Lumber DOL	1.15	BC	0.59	Vert(CT)	-0.27	12-13	>461	180		
BCLL	0.0 *	Rep Stress Incr	YES	WB	0.05	Horz(CT)	0.18	9	n/a	n/a		
BCDL	10.0	Code	IRC2015/TPI2014	Matrix-MR							Weight: 59 lb	FT = 20%

LUMBER

TOP CHORD	2x4 SP No.2
BOT CHORD	2x4 SP No.2
WEBS	2x4 SP No.3
OTHERS	2x4 SP No.3

BRACING

TOP CHORD	Structural wood sheathing directly applied or 6-0-0 oc purlins, except end verticals.
BOT CHORD	Rigid ceiling directly applied or 10-0-0 oc bracing.

REACTIONS (lb/size) 9=405/0-3-8, (min. 0-1-8), 16=473/0-3-8, (min. 0-1-8)
Max Horiz 16=172 (LC 7)
Max Uplift 9=-48 (LC 11), 16=-67 (LC 10)

FORCES (lb) - Max. Comp./Max. Ten. - All forces 250 (lb) or less except when shown.
TOP CHORD 2-16=-414/123, 2-3=-389/78, 3-4=-340/134, 4-5=-263/140, 5-6=-261/142, 6-7=-358/137, 7-8=-388/77, 8-9=-327/72
BOT CHORD 15-16=-61/258, 14-15=-69/289, 13-14=-64/264, 12-13=-53/272, 10-11=-55/284, 9-10=-64/253

NOTES

1) Unbalanced roof live loads have been considered for this design.
2) Wind: ASCE 7-10; Vult=130mph (3-second gust) Vasd=103mph; TCDL=6.0psf; BCDL=6.0psf; h=35ft; Cat. II; Exp B; Enclosed; MWFRS (envelope) exterior zone and C-C Corner (3) zone; cantilever left and right exposed ; end vertical left and right exposed;C-C for members and forces & MWFRS for reactions shown; Lumber DOL=1.60 plate grip DOL=1.60
3) Truss designed for wind loads in the plane of the truss only.
4) All plates are 1.5x3 MT20 unless otherwise indicated.
5) Truss to be fully sheathed from one face or securely braced against lateral movement (i.e. diagonal web).
6) Gable studs spaced at 2-0-0 oc.
7) This truss has been designed for a 10.0 psf bottom chord live load nonconcurrent with any other live loads.
8) * This truss has been designed for a live load of 20.0psf on the bottom chord in all areas where a rectangle 3-06-00 tall by 2-00-00 wide will fit between the bottom chord and any other members.
9) Bearing at joint(s) 9, 16 considers parallel to grain value using ANSI/TPI 1 angle to grain formula. Building designer should verify capacity of bearing surface.
10) Provide mechanical connection (by others) of truss to bearing plate capable of withstanding 48 lb uplift at joint 9 and 67 lb uplift at joint 16.
11) This truss is designed in accordance with the 2015 International Residential Code sections R502.11.1 and R802.10.2 and referenced standard ANSI/TPI 1.

NORTH CAROLINA PROFESSIONAL SEAL 054919 ENGINEER HUNTER B. DOSS
3/24/2025

Job	Truss	Truss Type	Qty	Ply	PBS/GUILFORD GEORGIAN RH ROOF
72507638	C1	Truss	5	1	Job Reference (optional)

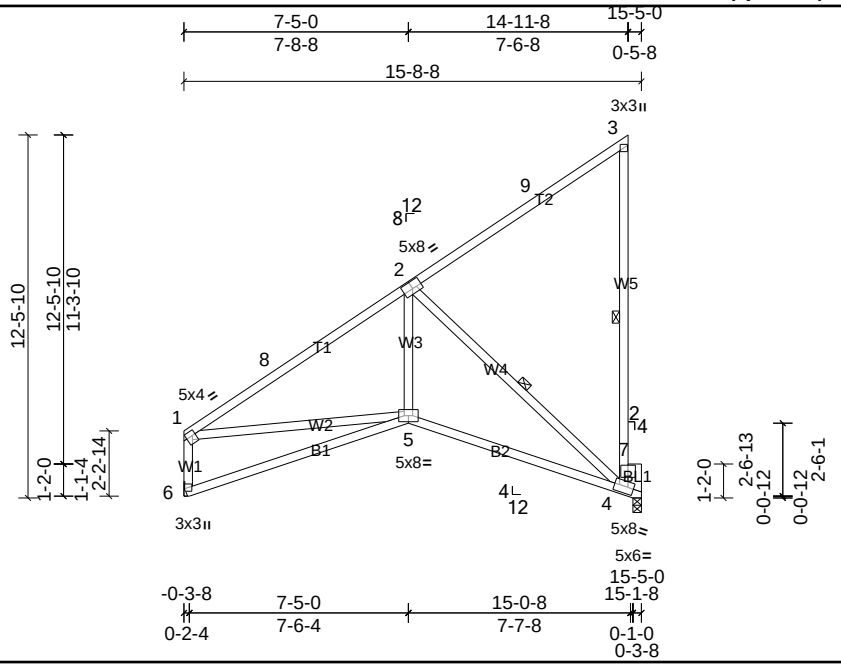

Plate Offsets (X, Y): [1:0-1-4,0-2-0], [2:0-4-0,0-3-0], [4:0-2-0,0-2-12]

Loading	(psf)	Spacing	2-0-0	CSI		DEFL	in	(loc)	l/defl	L/d	PLATES	GRIP
TCLL (roof)	20.0	Plate Grip DOL	1.15	TC	0.79	Vert(LL)	-0.13	4-5	>999	240	MT20	244/190
TCDL	10.0	Lumber DOL	1.15	BC	0.59	Vert(CT)	-0.26	4-5	>707	180		
BCLL	0.0 *	Rep Stress Incr	YES	WB	0.50	Horz(CT)	0.04	4	n/a	n/a		
BCDL	10.0	Code	IRC2015/TPI2014	Matrix-MSH							Weight: 107 lb	FT = 20%

LUMBER

TOP CHORD	2x4 SP No.2
BOT CHORD	2x4 SP No.2
WEBS	2x4 SP No.3
OTHERS	2x6 SP No.2

BRACING

TOP CHORD	Structural wood sheathing directly applied or 4-11-9 oc purlins, except end verticals.
BOT CHORD	Rigid ceiling directly applied or 8-5-15 oc bracing.
WEBS	1 Row at midpt 3-4, 2-4

REACTIONS (lb/size) 4=594/0-3-8, (min. 0-1-8), 6=607/ Mechanical, (min. 0-1-8)
Max Horiz 6=375 (LC 10)
Max Uplift 4=-302 (LC 10)
Max Grav 4=654 (LC 17), 6=607 (LC 1)

FORCES (lb) - Max. Comp./Max. Ten. - All forces 250 (lb) or less except when shown.

TOP CHORD	1-8=-824/44, 2-8=-715/75, 1-6=-562/121
BOT CHORD	5-6=-454/492, 4-5=-383/773
WEBS	2-5=-151/551, 2-4=-959/476, 1-5=0/507

NOTES

1) Unbalanced roof live loads have been considered for this design.
2) Wind: ASCE 7-10; Vult=130mph (3-second gust) Vasd=103mph; TCDL=6.0psf; BCDL=6.0psf; h=35ft; Cat. II; Exp B; Enclosed; MWFRS (envelope) exterior zone and C-C Exterior (2) 0-5-4 to 3-5-4, Interior (1) 3-5-4 to 12-4-12, Exterior (2) 12-4-12 to 15-4-12 zone; cantilever left and right exposed ; end vertical left exposed;C-C for members and forces & MWFRS for reactions shown; Lumber DOL=1.60 plate grip DOL=1.60
3) Provide adequate drainage to prevent water ponding.
4) This truss has been designed for a 10.0 psf bottom chord live load nonconcurrent with any other live loads.
5) * This truss has been designed for a live load of 20.0psf on the bottom chord in all areas where a rectangle 3-06-00 tall by 2-00-00 wide will fit between the bottom chord and any other members.
6) Bearing at joint(s) 4 considers parallel to grain value using ANSI/TPI 1 angle to grain formula. Building designer should verify capacity of bearing surface.
7) Provide mechanical connection (by others) of truss to bearing plate capable of withstanding 302 lb uplift at joint 4.
8) This truss is designed in accordance with the 2015 International Residential Code sections R502.11.1 and R802.10.2 and referenced standard ANSI/TPI 1.

Job	Truss	Truss Type	Qty	Ply	PBS/GUILFORD GEORGIAN RH ROOF
72507638	C1G	Truss	1	1	Job Reference (optional)

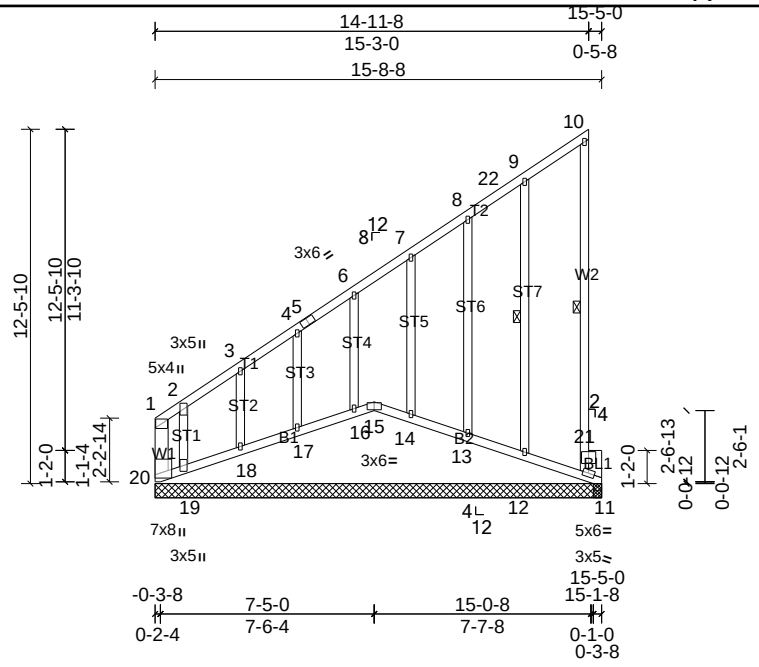

Loading	(psf)	Spacing	2-0-0	CSI		DEFL	in	(loc)	l/defl	L/d	PLATES	GRIP
TCLL (roof)	20.0	Plate Grip DOL	1.15	TC	0.58	Vert(LL)	0.00	19-20	>999	240	MT20	244/190
TCDL	10.0	Lumber DOL	1.15	BC	0.66	Vert(CT)	0.00	19-20	>999	180		
BCLL	0.0 *	Rep Stress Incr	YES	WB	0.18	Horz(CT)	n/a	-	n/a	n/a		
BCDL	10.0	Code	IRC2015/TPI2014	Matrix-MR							Weight: 129 lb	FT = 20%

LUMBER

TOP CHORD	2x4 SP No.2
BOT CHORD	2x4 SP No.2
WEBS	2x4 SP No.3 *Except* W1:2x6 SP No.2
OTHERS	2x4 SP No.3 *Except* BL1:2x6 SP No.2

BRACING

TOP CHORD	Structural wood sheathing directly applied or 5-6-5 oc purlins, except end verticals.
BOT CHORD	Rigid ceiling directly applied or 6-0-0 oc bracing.
WEBS	1 Row at midpt 10-11, 9-12

REACTIONS All bearings 15-8-8.

(lb) - Max Horiz 20=372 (LC 10)
Max Uplift All uplift 100 (lb) or less at joint(s) 11, 12, 13, 14, 16, 17, 18 except 19=-1252 (LC 10), 20=-601 (LC 8)
Max Grav All reactions 250 (lb) or less at joint(s) 11, 12, 13, 14, 15, 16, 17, 18 except 19=636 (LC 8), 20=1403 (LC 10)

FORCES (lb) - Max. Comp./Max. Ten. - All forces 250 (lb) or less except when shown.

TOP CHORD 1-2=-757/634, 2-3=-421/338, 3-4=-364/292, 4-5=-298/221, 5-6=-291/241, 1-20=-769/657
WEBS 2-19=-574/598

NOTES

1) Unbalanced roof live loads have been considered for this design.
2) Wind: ASCE 7-10; Vult=130mph (3-second gust) Vasd=103mph; TCDL=6.0psf; BCDL=6.0psf; h=35ft; Cat. II; Exp B; Enclosed; MWFRS (envelope) exterior zone and C-C Exterior (2) 0-6-4 to 3-3-8, Interior (1) 3-3-8 to 12-4-12, Exterior (2) 12-4-12 to 15-4-12 zone; cantilever left and right exposed ; end vertical left exposed;C-C for members and forces & MWFRS for reactions shown; Lumber DOL=1.60 plate grip DOL=1.60
3) Truss designed for wind loads in the plane of the truss only.
4) Provide adequate drainage to prevent water ponding.
5) All plates are 1.5x3 MT20 unless otherwise indicated.
6) Truss to be fully sheathed from one face or securely braced against lateral movement (i.e. diagonal web).
7) Gable studs spaced at 2-0-0 oc.
8) This truss has been designed for a 10.0 psf bottom chord live load nonconcurrent with any other live loads.
9) * This truss has been designed for a live load of 20.0psf on the bottom chord in all areas where a rectangle 3-06-00 tall by 2-00-00 wide will fit between the bottom chord and any other members.
10) Provide mechanical connection (by others) of truss to bearing plate capable of withstanding 100 lb uplift at joint(s) 11, 18, 17, 16, 14, 13, 12 except (jt=lb) 20=601, 19=1251.
11) This truss is designed in accordance with the 2015 International Residential Code sections R502.11.1 and R802.10.2 and referenced standard ANSI/TPI 1.

NORTH CAROLINA PROFESSIONAL SEAL 054919 ENGINEER HUNTER B. DOSS
3/24/2025

Job	Truss	Truss Type	Qty	Ply	PBS/GUILFORD GEORGIAN RH ROOF
72507638	C2	Truss	2	1	Job Reference (optional)

ID:aIwV38c8xqIu8rROfnhDPFyQtnl-VD55jVbnW7vxefjaWAWPG9EYxQzL0ATvQpydqTzXkDk

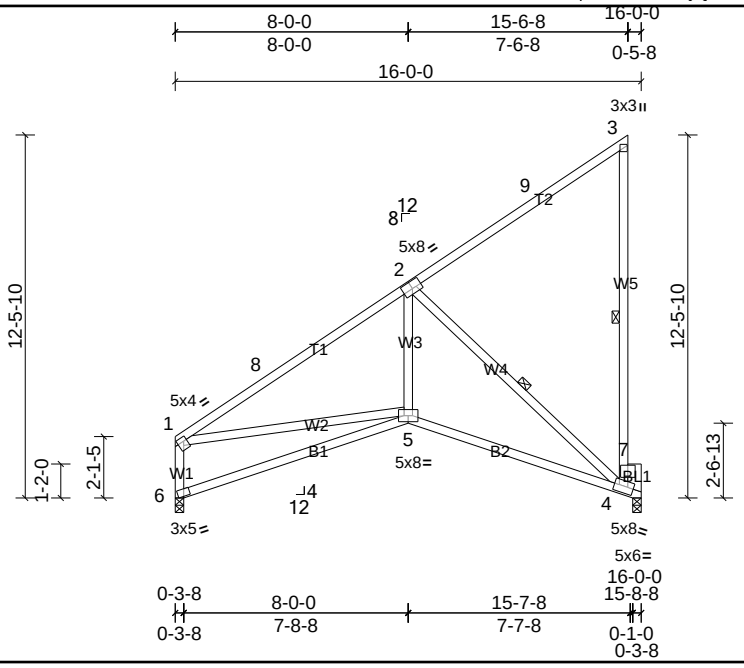

Plate Offsets (X, Y): [1:0-1-4,0-1-12], [2:0-4-0,0-3-0], [4:0-2-0,0-2-12], [6:0-2-8,0-1-2]

Loading	(psf)	Spacing	2-0-0	CSI		DEFL	in	(loc)	l/defl	L/d	PLATES	GRIP
TCLL (roof)	20.0	Plate Grip DOL	1.15	TC	0.83	Vert(LL)	-0.13	5-6	>999	240	MT20	244/190
TCDL	10.0	Lumber DOL	1.15	BC	0.59	Vert(CT)	-0.26	5-6	>709	180		
BCLL	0.0 *	Rep Stress Incr	YES	WB	0.51	Horz(CT)	0.04	4	n/a	n/a		
BCDL	10.0	Code	IRC2015/TPI2014	Matrix-MSH							Weight: 108 lb	FT = 20%

LUMBER

TOP CHORD	2x4 SP No.2
BOT CHORD	2x4 SP No.2
WEBS	2x4 SP No.3
OTHERS	2x6 SP No.2

BRACING

TOP CHORD	Structural wood sheathing directly applied or 4-5-15 oc purlins, except end verticals.
BOT CHORD	Rigid ceiling directly applied or 8-3-13 oc bracing.
WEBS	1 Row at midpt 3-4, 2-4

REACTIONS (lb/size) 4=606/0-3-8, (min. 0-1-8), 6=619/0-3-8, (min. 0-1-8)
Max Horiz 6=384 (LC 10)
Max Uplift 4=-305 (LC 10)
Max Grav 4=665 (LC 17), 6=619 (LC 1)

FORCES (lb) - Max. Comp./Max. Ten. - All forces 250 (lb) or less except when shown.

TOP CHORD	1-8=-857/47, 2-8=-743/80, 1-6=-575/130
BOT CHORD	5-6=-469/513, 4-5=-390/794
WEBS	2-5=-154/573, 2-4=-986/485, 1-5=0/516

NOTES

1) Unbalanced roof live loads have been considered for this design.
2) Wind: ASCE 7-10; Vult=130mph (3-second gust) Vasd=103mph; TCDL=6.0psf; BCDL=6.0psf; h=35ft; Cat. II; Exp B; Enclosed; MWFRS (envelope) exterior zone and C-C Exterior (2) 0-1-12 to 3-1-12, Interior (1) 3-1-12 to 12-4-12, Exterior (2) 12-4-12 to 15-4-12 zone; cantilever left and right exposed ; end vertical left exposed;C-C for members and forces & MWFRS for reactions shown; Lumber DOL=1.60 plate grip DOL=1.60
3) This truss has been designed for a 10.0 psf bottom chord live load nonconcurrent with any other live loads.
4) * This truss has been designed for a live load of 20.0psf on the bottom chord in all areas where a rectangle 3-06-00 tall by 2-00-00 wide will fit between the bottom chord and any other members.
5) Bearing at joint(s) 4, 6 considers parallel to grain value using ANSI/TPI 1 angle to grain formula. Building designer should verify capacity of bearing surface.
6) Provide mechanical connection (by others) of truss to bearing plate capable of withstanding 305 lb uplift at joint 4.
7) This truss is designed in accordance with the 2015 International Residential Code sections R502.11.1 and R802.10.2 and referenced standard ANSI/TPI 1.

Job	Truss	Truss Type	Qty	Ply	PBS/GUILFORD GEORGIAN RH ROOF
72507638	C3	Truss	5	1	Job Reference (optional)

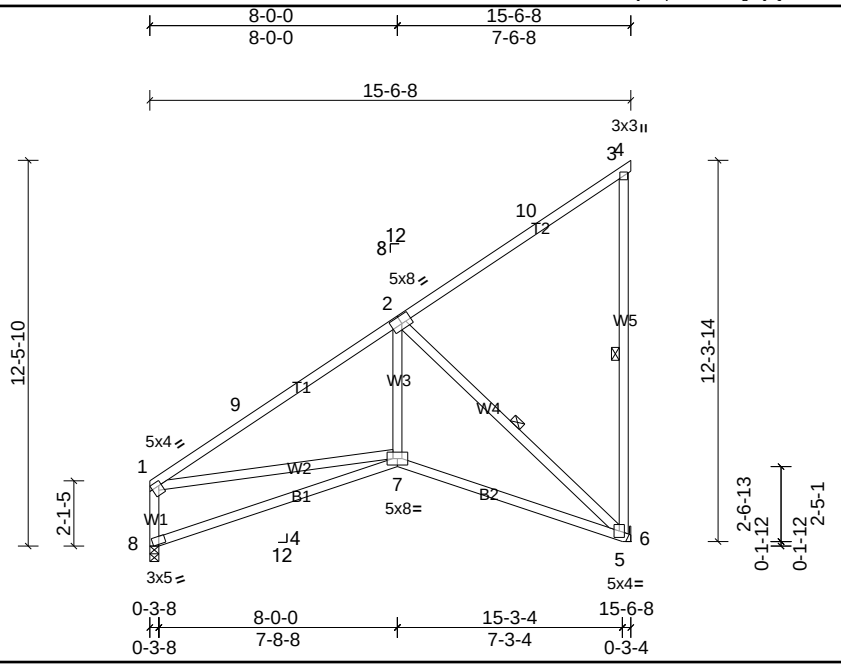

Plate Offsets (X, Y): [1:Edge,0-1-12], [2:0-4-0,0-3-0], [8:0-2-8,0-1-2]

Loading	(psf)	Spacing	2-0-0	CSI		DEFL	in	(loc)	l/defl	L/d	PLATES	GRIP
TCLL (roof)	20.0	Plate Grip DOL	1.15	TC	0.82	Vert(LL)	-0.13	7-8	>999	240	MT20	244/190
TCDL	10.0	Lumber DOL	1.15	BC	0.55	Vert(CT)	-0.26	7-8	>687	180		
BCLL	0.0 *	Rep Stress Incr	YES	WB	0.50	Horz(CT)	0.04	6	n/a	n/a		
BCDL	10.0	Code	IRC2015/TPI2014	Matrix-MSH							Weight: 105 lb	FT = 20%

LUMBER

TOP CHORD	2x4 SP No.2
BOT CHORD	2x4 SP No.2
WEBS	2x4 SP No.3

BRACING

TOP CHORD	Structural wood sheathing directly applied or 4-7-1 oc purlins, except end verticals.
BOT CHORD	Rigid ceiling directly applied or 8-3-8 oc bracing.
WEBS	1 Row at midpt 3-6, 2-6

REACTIONS (lb/size) 6=613/ Mechanical, (min. 0-1-8), 8=607/0-3-8, (min. 0-1-8)
Max Horiz 8=387 (LC 10)
Max Uplift 6=-319 (LC 10)
Max Grav 6=676 (LC 17), 8=607 (LC 1)

FORCES (lb) - Max. Comp./Max. Ten. - All forces 250 (lb) or less except when shown.
TOP CHORD 1-9=-830/30, 2-9=-715/63, 1-8=-562/122
BOT CHORD 7-8=-473/514, 6-7=-374/767
WEBS 2-7=-152/562, 2-6=-970/479, 1-7=0/491

NOTES

1) Unbalanced roof live loads have been considered for this design.
2) Wind: ASCE 7-10; Vult=130mph (3-second gust) Vasd=103mph; TCDL=6.0psf; BCDL=6.0psf; h=35ft; Cat. II; Exp B; Enclosed; MWFRS (envelope) exterior zone and C-C Exterior (2) 0-1-12 to 3-1-12, Interior (1) 3-1-12 to 12-6-8, Exterior (2) 12-6-8 to 15-6-8 zone; cantilever left and right exposed ; end vertical left exposed;C-C for members and forces & MWFRS for reactions shown; Lumber DOL=1.60 plate grip DOL=1.60
3) This truss has been designed for a 10.0 psf bottom chord live load nonconcurrent with any other live loads.
4) * This truss has been designed for a live load of 20.0psf on the bottom chord in all areas where a rectangle 3-06-00 tall by 2-00-00 wide will fit between the bottom chord and any other members.
5) Bearing at joint(s) 8 considers parallel to grain value using ANSI/TPI 1 angle to grain formula. Building designer should verify capacity of bearing surface.
6) Provide mechanical connection (by others) of truss to bearing plate capable of withstanding 319 lb uplift at joint 6.
7) This truss is designed in accordance with the 2015 International Residential Code sections R502.11.1 and R802.10.2 and referenced standard ANSI/TPI 1.

NORTH CAROLINA PROFESSIONAL SEAL 054919 ENGINEER HUNTER B. DOSS
3/24/2025

Job	Truss	Truss Type	Qty	Ply	PBS/GUILFORD GEORGIAN RH ROOF
72507638	C4	Truss	7	1	Job Reference (optional)

ID:36eRhMslhTHG?gpBBv1N4zyQtm8-zPfTxrcPHR1oGoHn3u1epNmjhpJZldj2fTiANvzXkDj

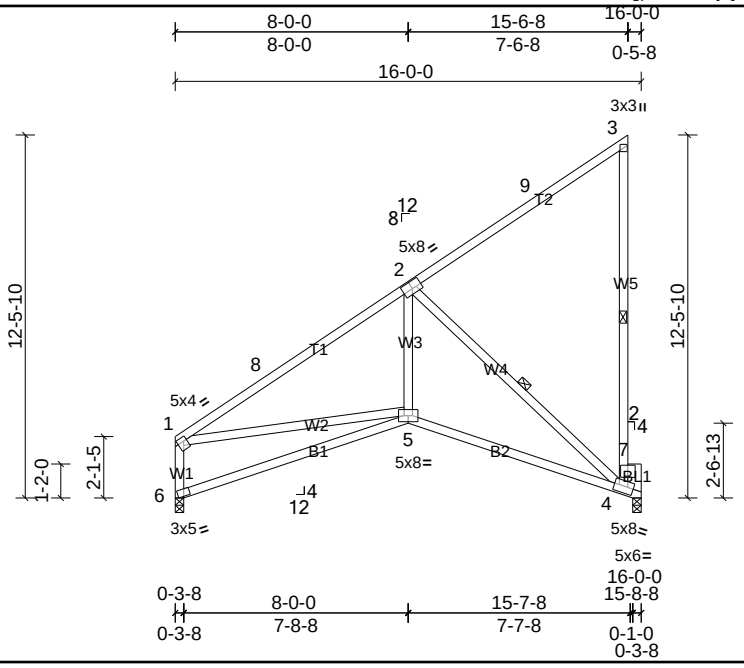

Plate Offsets (X, Y): [1:0-1-4,0-1-12], [2:0-4-0,0-3-0], [4:0-2-0,0-2-12], [6:0-2-8,0-1-2]

Loading	(psf)	Spacing	2-0-0	CSI		DEFL	in	(loc)	l/defl	L/d	PLATES	GRIP
TCLL (roof)	20.0	Plate Grip DOL	1.15	TC	0.83	Vert(LL)	-0.13	5-6	>999	240	MT20	244/190
TCDL	10.0	Lumber DOL	1.15	BC	0.59	Vert(CT)	-0.26	5-6	>709	180		
BCLL	0.0 *	Rep Stress Incr	YES	WB	0.51	Horz(CT)	0.04	4	n/a	n/a		
BCDL	10.0	Code	IRC2015/TPI2014	Matrix-MSH							Weight: 108 lb	FT = 20%

LUMBER

TOP CHORD	2x4 SP No.2
BOT CHORD	2x4 SP No.2
WEBS	2x4 SP No.3
OTHERS	2x6 SP No.2

BRACING

TOP CHORD	Structural wood sheathing directly applied or 4-5-15 oc purlins, except end verticals.
BOT CHORD	Rigid ceiling directly applied or 8-3-13 oc bracing.
WEBS	1 Row at midpt 3-4, 2-4

REACTIONS (lb/size) 4=606/0-3-8, (min. 0-1-8), 6=619/0-3-8, (min. 0-1-8)
Max Horiz 6=384 (LC 10)
Max Uplift 4=-305 (LC 10)
Max Grav 4=665 (LC 17), 6=619 (LC 1)

FORCES (lb) - Max. Comp./Max. Ten. - All forces 250 (lb) or less except when shown.

TOP CHORD	1-8=-857/47, 2-8=-743/80, 1-6=-575/130
BOT CHORD	5-6=-469/513, 4-5=-390/794
WEBS	2-5=-154/573, 2-4=-986/485, 1-5=0/516

NOTES

1) Unbalanced roof live loads have been considered for this design.
2) Wind: ASCE 7-10; Vult=130mph (3-second gust) Vasd=103mph; TCDL=6.0psf; BCDL=6.0psf; h=35ft; Cat. II; Exp B; Enclosed; MWFRS (envelope) exterior zone and C-C Exterior (2) 0-1-12 to 3-1-12, Interior (1) 3-1-12 to 12-4-12, Exterior (2) 12-4-12 to 15-4-12 zone; cantilever left and right exposed ; end vertical left exposed;C-C for members and forces & MWFRS for reactions shown; Lumber DOL=1.60 plate grip DOL=1.60
3) Provide adequate drainage to prevent water ponding.
4) This truss has been designed for a 10.0 psf bottom chord live load nonconcurrent with any other live loads.
5) * This truss has been designed for a live load of 20.0psf on the bottom chord in all areas where a rectangle 3-06-00 tall by 2-00-00 wide will fit between the bottom chord and any other members.
6) Bearing at joint(s) 4, 6 considers parallel to grain value using ANSI/TPI 1 angle to grain formula. Building designer should verify capacity of bearing surface.
7) Provide mechanical connection (by others) of truss to bearing plate capable of withstanding 305 lb uplift at joint 4.
8) This truss is designed in accordance with the 2015 International Residential Code sections R502.11.1 and R802.10.2 and referenced standard ANSI/TPI 1.

Job	Truss	Truss Type	Qty	Ply	PBS/GUILFORD GEORGIAN RH ROOF
72507638	C4G	Truss	1	1	Job Reference (optional)

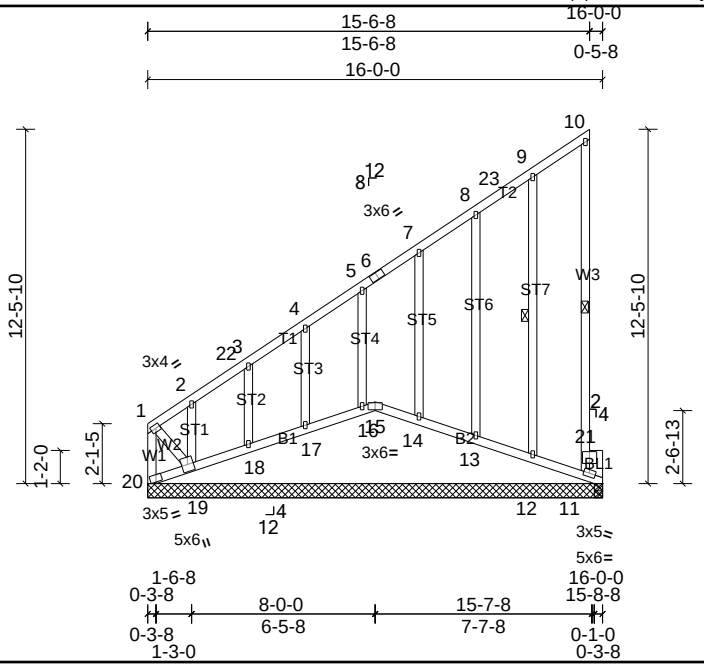

Plate Offsets (X, Y): [1:0-1-12,0-1-8], [20:0-2-8,0-1-2]

Loading	(psf)	Spacing	2-0-0	CSI		DEFL	in	(loc)	l/defl	L/d	PLATES	GRIP
TCLL (roof)	20.0	Plate Grip DOL	1.15	TC	0.15	Vert(LL)	0.00	15-16	>999	240	MT20	244/190
TCDL	10.0	Lumber DOL	1.15	BC	0.07	Vert(CT)	0.00	11-12	>999	180		
BCLL	0.0 *	Rep Stress Incr	YES	WB	0.17	Horz(CT)	0.00	11	n/a	n/a		
BCDL	10.0	Code	IRC2015/TPI2014	Matrix-MSH							Weight: 132 lb	FT = 20%

LUMBER

TOP CHORD	2x4 SP No.2
BOT CHORD	2x4 SP No.2
WEBS	2x4 SP No.3
OTHERS	2x4 SP No.3 *Except* BL1:2x6 SP No.2

BRACING

TOP CHORD	Structural wood sheathing directly applied or 6-0-0 oc purlins, except end verticals.
BOT CHORD	Rigid ceiling directly applied or 6-0-0 oc bracing.
WEBS	1 Row at midpt 10-11, 9-12

REACTIONS All bearings 16-0-0.

(lb) - Max Horiz 20=411 (LC 10)

Max Uplift All uplift 100 (lb) or less at joint(s) 11, 12, 13, 14, 16, 17, 18 except 19=-624 (LC 10), 20=-270 (LC 8)

Max Grav All reactions 250 (lb) or less at joint(s) 11, 12, 13, 14, 15, 16, 17, 18 except 19=315 (LC 8), 20=819 (LC 10)

FORCES (lb) - Max. Comp./Max. Ten. - All forces 250 (lb) or less except when shown.

TOP CHORD 1-20=-672/515, 1-2=-477/384, 2-22=-425/329, 3-22=-413/341, 3-4=-356/287, 4-5=-293/236

BOT CHORD 19-20=-432/346

WEBS 1-19=-465/587

NOTES

1) Unbalanced roof live loads have been considered for this design.
2) Wind: ASCE 7-10; Vult=130mph (3-second gust) Vasd=103mph; TCDL=6.0psf; BCDL=6.0psf; h=35ft; Cat. II; Exp B; Enclosed; MWFRS (envelope) exterior zone and C-C Exterior (2) 0-1-12 to 3-1-12, Interior (1) 3-1-12 to 12-4-12, Exterior (2) 12-4-12 to 15-4-12 zone; cantilever left and right exposed ;C-C for members and forces & MWFRS for reactions shown; Lumber DOL=1.60 plate grip DOL=1.60
3) Truss designed for wind loads in the plane of the truss only.
4) Provide adequate drainage to prevent water ponding.
5) All plates are 1.5x3 MT20 unless otherwise indicated.
6) Truss to be fully sheathed from one face or securely braced against lateral movement (i.e. diagonal web).
7) Gable studs spaced at 2-0-0 oc.
8) This truss has been designed for a 10.0 psf bottom chord live load nonconcurrent with any other live loads.
9) * This truss has been designed for a live load of 20.0psf on the bottom chord in all areas where a rectangle 3-06-00 tall by 2-00-00 wide will fit between the bottom chord and any other members.
10) Bearing at joint(s) 20 considers parallel to grain value using ANSI/TPI 1 angle to grain formula. Building designer should verify capacity of bearing surface.
11) Provide mechanical connection (by others) of truss to bearing plate capable of withstanding 100 lb uplift at joint(s) 11, 12, 13, 14, 16, 17, 18 except (jt=lb) 20=270, 19=623.
12) This truss is designed in accordance with the 2015 International Residential Code sections R502.11.1 and R802.10.2 and referenced standard ANSI/TPI 1.

Job	Truss	Truss Type	Qty	Ply	PBS/GUILFORD GEORGIAN RH ROOF
72507638	D1	Truss	4	1	Job Reference (optional)

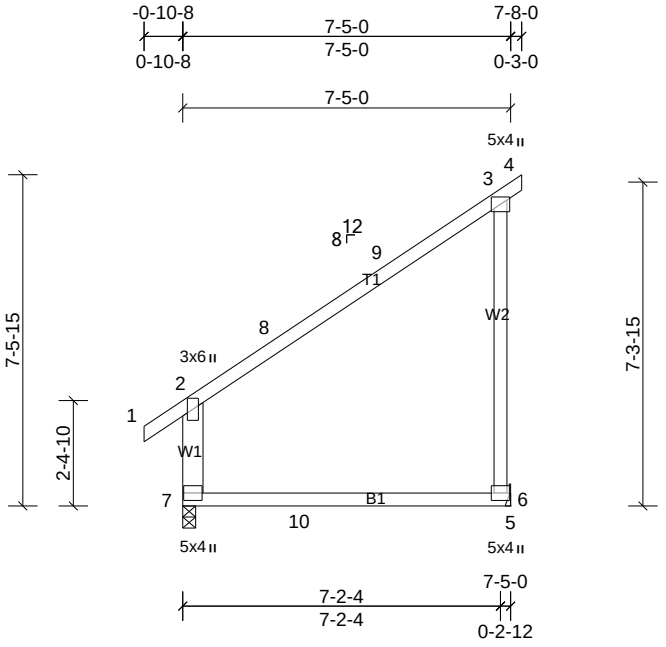

Loading	(psf)	Spacing	2-0-0	CSI		DEFL	in	(loc)	l/defl	L/d	PLATES	GRIP
TCLL (roof)	20.0	Plate Grip DOL	1.15	TC	0.97	Vert(LL)	-0.13	6-7	>663	240	MT20	244/190
TCDL	10.0	Lumber DOL	1.15	BC	0.56	Vert(CT)	-0.22	6-7	>388	180		
BCLL	0.0 *	Rep Stress Incr	YES	WB	0.00	Horz(CT)	0.00	6	n/a	n/a		
BCDL	10.0	Code	IRC2015/TPI2014	Matrix-MR							Weight: 41 lb	FT = 20%

LUMBER

TOP CHORD	2x4 SP No.2
BOT CHORD	2x4 SP No.2
WEBS	2x4 SP No.3 *Except* W1:2x6 SP No.2

BRACING

TOP CHORD	Structural wood sheathing directly applied or 6-0-0 oc purlins, except end verticals.
BOT CHORD	Rigid ceiling directly applied or 10-0-0 oc bracing.

REACTIONS (lb/size) 6=307/ Mechanical, (min. 0-1-8), 7=349/0-3-8, (min. 0-1-8)
Max Horiz 7=193 (LC 10)
Max Uplift 6=-199 (LC 10)
Max Grav 6=445 (LC 17), 7=349 (LC 1)

FORCES (lb) - Max. Comp./Max. Ten. - All forces 250 (lb) or less except when shown.
TOP CHORD 2-7=-298/51

NOTES

1) Unbalanced roof live loads have been considered for this design.
2) Wind: ASCE 7-10; Vult=130mph (3-second gust) Vasd=103mph; TCDL=6.0psf; BCDL=6.0psf; h=35ft; Cat. II; Exp B; Enclosed; MWFRS (envelope) exterior zone and C-C Exterior (2) -0-10-8 to 2-1-8, Interior (1) 2-1-8 to 4-8-0, Exterior (2) 4-8-0 to 7-8-0 zone; cantilever left and right exposed ; end vertical left exposed;C-C for members and forces & MWFRS for reactions shown; Lumber DOL=1.60 plate grip DOL=1.60
3) This truss has been designed for a 10.0 psf bottom chord live load nonconcurrent with any other live loads.
4) * This truss has been designed for a live load of 20.0psf on the bottom chord in all areas where a rectangle 3-06-00 tall by 2-00-00 wide will fit between the bottom chord and any other members, with BCDL = 10.0psf.
5) Provide mechanical connection (by others) of truss to bearing plate capable of withstanding 199 lb uplift at joint 6.
6) This truss is designed in accordance with the 2015 International Residential Code sections R502.11.1 and R802.10.2 and referenced standard ANSI/TPI 1.

Job	Truss	Truss Type	Qty	Ply	PBS/GUILFORD GEORGIAN RH ROOF
72507638	D1F	Truss	3	1	Job Reference (optional)

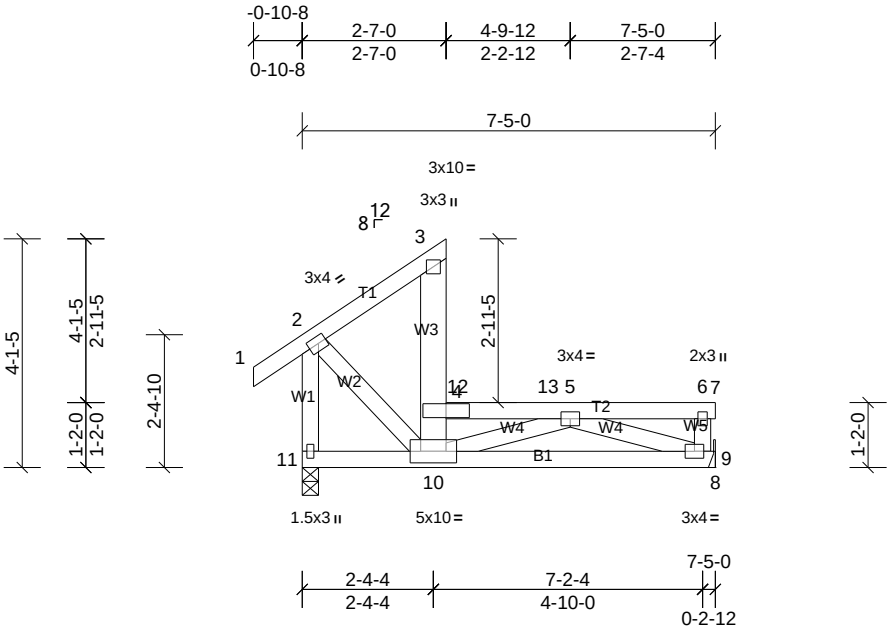

Plate Offsets (X, Y): [2:0-1-12,0-1-8]

Loading	(psf)	Spacing	1-7-3	CSI		DEFL	in	(loc)	l/defl	L/d	PLATES	GRIP
TCLL (roof)	20.0	Plate Grip DOL	1.00	TC	0.64	Vert(LL)	-0.02	10	>999	240	MT20	244/190
TCDL	10.0	Lumber DOL	1.00	BC	0.47	Vert(CT)	-0.05	10	>999	180		
BCLL	0.0 *	Rep Stress Incr	NO	WB	0.23	Horz(CT)	0.01	9	n/a	n/a		
BCDL	10.0	Code	IRC2015/TPI2014	Matrix-MSH							Weight: 47 lb	FT = 20%

LUMBER

TOP CHORD	2x4 SP No.2
BOT CHORD	2x4 SP No.2
WEBS	2x4 SP No.3 *Except* W3:2x6 SP No.2

BRACING

TOP CHORD	Structural wood sheathing directly applied or 6-0-0 oc purlins, except end verticals, and 2-0-0 oc purlins (5-6-10 max.): 4-10, 4-7.
BOT CHORD	Rigid ceiling directly applied or 10-0-0 oc bracing.

REACTIONS (lb/size) 9=304/ Mechanical, (min. 0-1-8), 11=402/0-3-8, (min. 0-1-8)
Max Horiz 11=-132 (LC 8)
Max Uplift 9=-3 (LC 11)
Max Grav 9=486 (LC 17), 11=465 (LC 2)

FORCES (lb) - Max. Comp./Max. Ten. - All forces 250 (lb) or less except when shown.
TOP CHORD 4-12=-1049/81, 12-13=-1049/81, 5-13=-1049/81, 2-11=-367/0
BOT CHORD 9-10=-103/925
WEBS 2-10=0/263, 5-10=-20/296, 5-9=-890/104

NOTES

1) Unbalanced roof live loads have been considered for this design.
2) Wind: ASCE 7-10; Vult=130mph (3-second gust) Vasd=103mph; TCDL=6.0psf; BCDL=6.0psf; h=35ft; Cat. II; Exp B; Enclosed; MWFRS (envelope) exterior zone and C-C Exterior (2) -0-10-8 to 2-4-4, Interior (1) 2-4-4 to 4-5-0, Exterior (2) 4-5-0 to 7-5-0 zone; cantilever left and right exposed ; end vertical left exposed;C-C for members and forces & MWFRS for reactions shown; Lumber DOL=1.60 plate grip DOL=1.60
3) Provide adequate drainage to prevent water ponding.
4) This truss has been designed for a 10.0 psf bottom chord live load nonconcurrent with any other live loads.
5) * This truss has been designed for a live load of 20.0psf on the bottom chord in all areas where a rectangle 3-06-00 tall by 2-00-00 wide will fit between the bottom chord and any other members.
6) Provide mechanical connection (by others) of truss to bearing plate capable of withstanding 3 lb uplift at joint 9.
7) This truss is designed in accordance with the 2015 International Residential Code sections R502.11.1 and R802.10.2 and referenced standard ANSI/TPI 1.
8) Load case(s) 1, 2 has/have been modified. Building designer must review loads to verify that they are correct for the intended use of this truss.
9) Graphical purlin representation does not depict the size or the orientation of the purlin along the top and/or bottom chord.

LOAD CASE(S) Standard

1) Dead + Roof Live (balanced): Lumber Increase=1.00, Plate Increase=1.00
   Uniform Loads (lb/ft)
   Vert: 1-2=-48, 2-3=-48, 4-6=-48, 6-7=-16, 8-11=-16
   Concentrated Loads (lb)
   Vert: 12=-200
2) Dead + 0.75 Roof Live (balanced) + 0.75 Attic Floor: Lumber Increase=1.00, Plate Increase=1.00
   Uniform Loads (lb/ft)
   Vert: 1-2=-40, 2-3=-40, 4-6=-100, 6-7=-76, 8-11=-16
   Concentrated Loads (lb)
   Vert: 12=-200

NORTH CAROLINA PROFESSIONAL SEAL 054919 ENGINEER HUNTER B. DOSS
3/24/2025

Job	Truss	Truss Type	Qty	Ply	PBS/GUILFORD GEORGIAN RH ROOF
72507638	D1FL	Truss	2	**2**	Job Reference (optional)

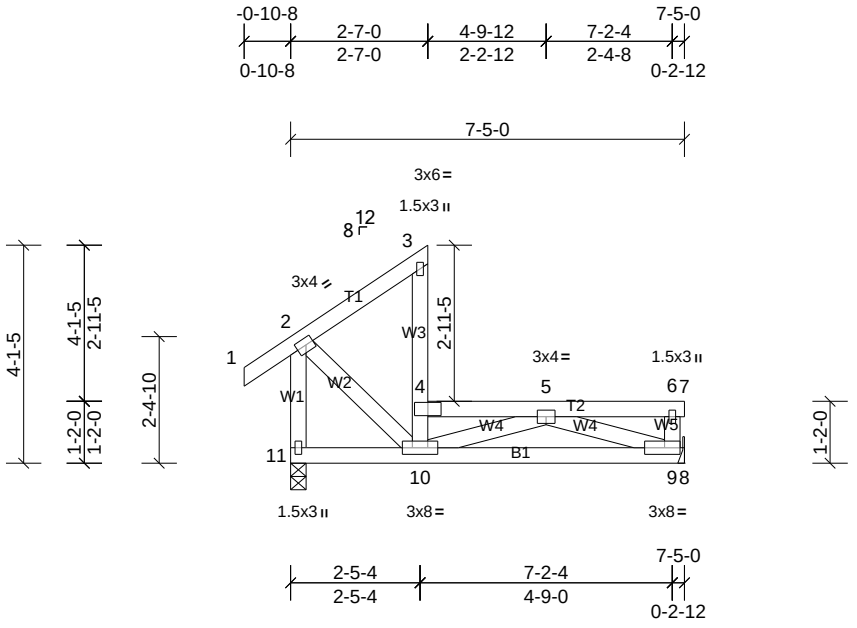

Plate Offsets (X, Y): [2:0-1-12,0-1-8], [9:0-3-8,0-1-8]

Loading	(psf)	**Spacing**	2-0-0	**CSI**		**DEFL**	in	(loc)	l/defl	L/d	**PLATES**	**GRIP**
TCLL (roof)	20.0	Plate Grip DOL	1.00	TC	0.26	Vert(LL)	-0.06	9-10	>999	240	MT20	244/190
TCDL	10.0	Lumber DOL	1.00	BC	0.76	Vert(CT)	-0.16	9-10	>542	180		
BCLL	0.0 *	Rep Stress Incr	NO	WB	0.96	Horz(CT)	0.01	9	n/a	n/a		
BCDL	10.0	Code	IRC2015/TPI2014	Matrix-MSH							Weight: 89 lb	FT = 20%

LUMBER

TOP CHORD	2x4 SP No.2
BOT CHORD	2x4 SP No.2
WEBS	2x4 SP No.3 *Except* W3:2x4 SP No.1

BRACING

TOP CHORD	Structural wood sheathing directly applied or 6-0-0 oc purlins, except end verticals, and 2-0-0 oc purlins (6-0-0 max.): 4-7.
BOT CHORD	Rigid ceiling directly applied or 10-0-0 oc bracing.

REACTIONS (lb/size) 9=1098/ Mechanical, (min. 0-1-8), 11=731/0-3-8, (min. 0-1-8)
Max Horiz 11=93 (LC 5)
Max Grav 9=1199 (LC 2), 11=749 (LC 2)

FORCES (lb) - Max. Comp./Max. Ten. - All forces 250 (lb) or less except when shown.

TOP CHORD	2-3=-405/0, 4-5=-1302/0, 2-11=-575/0
BOT CHORD	9-10=0/1853
WEBS	6-9=-402/0, 2-10=0/378, 5-10=-664/0, 5-9=-1975/0

NOTES

1) 2-ply truss to be connected together with 10d (0.131"x3") nails as follows:
Top chords connected as follows: 2x4 - 1 row at 0-9-0 oc.
Bottom chords connected as follows: 2x4 - 1 row at 0-9-0 oc.
Web connected as follows: 2x4 - 1 row at 0-9-0 oc.
2) All loads are considered equally applied to all plies, except if noted as front (F) or back (B) face in the LOAD CASE(S) section. Ply to ply connections have been provided to distribute only loads noted as (F) or (B), unless otherwise indicated.
3) Unbalanced roof live loads have been considered for this design.
4) Wind: ASCE 7-10; Vult=130mph (3-second gust) Vasd=103mph; TCDL=6.0psf; BCDL=6.0psf; h=35ft; Cat. II; Exp B; Enclosed; MWFRS (envelope) exterior zone; cantilever left and right exposed ; end vertical left exposed; Lumber DOL=1.60 plate grip DOL=1.60
5) Provide adequate drainage to prevent water ponding.
6) This truss has been designed for a 10.0 psf bottom chord live load nonconcurrent with any other live loads.
7) * This truss has been designed for a live load of 20.0psf on the bottom chord in all areas where a rectangle 3-06-00 tall by 2-00-00 wide will fit between the bottom chord and any other members.
8) This truss is designed in accordance with the 2015 International Residential Code sections R502.11.1 and R802.10.2 and referenced standard ANSI/TPI 1.
9) Load case(s) 1, 2 has/have been modified. Building designer must review loads to verify that they are correct for the intended use of this truss.
10) Graphical purlin representation does not depict the size or the orientation of the purlin along the top and/or bottom chord.

LOAD CASE(S) Standard

1) Dead + Roof Live (balanced): Lumber Increase=1.00, Plate Increase=1.00
Uniform Loads (lb/ft)
Vert: 1-2=-60, 2-3=-60, 4-6=-300, 6-7=-260, 8-11=-20
2) Dead + 0.75 Roof Live (balanced) + 0.75 Attic Floor: Lumber Increase=1.00, Plate Increase=1.00
Uniform Loads (lb/ft)
Vert: 1-2=-50, 2-3=-50, 4-6=-330, 6-7=-300, 8-11=-20

NORTH CAROLINA PROFESSIONAL SEAL 054919 ENGINEER HUNTER B. DOSS
3/24/2025

Job	Truss	Truss Type	Qty	Ply	PBS/GUILFORD GEORGIAN RH ROOF
72507638	D1G	Truss	1	1	Job Reference (optional)

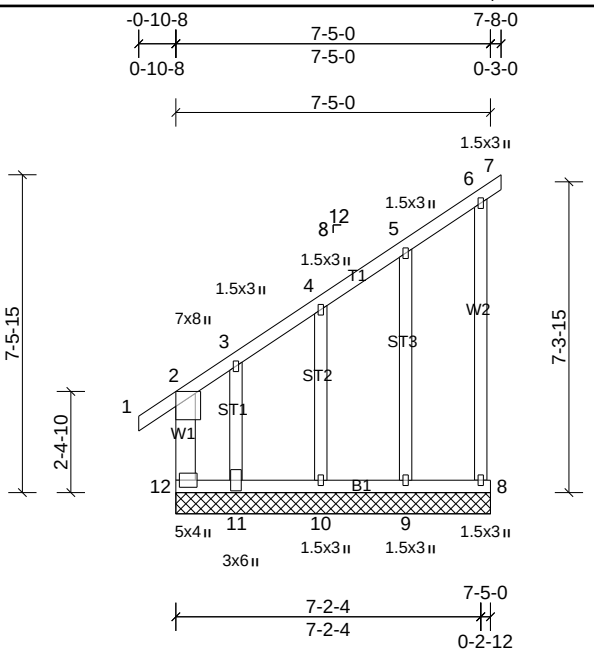

Plate Offsets (X, Y): [12:0-2-0,0-1-0]

Loading	(psf)	Spacing	2-0-0	CSI		DEFL	in	(loc)	l/defl	L/d	PLATES	GRIP
TCLL (roof)	20.0	Plate Grip DOL	1.15	TC	0.50	Vert(LL)	n/a	-	n/a	999	MT20	244/190
TCDL	10.0	Lumber DOL	1.15	BC	0.48	Vert(CT)	n/a	-	n/a	999		
BCLL	0.0 *	Rep Stress Incr	YES	WB	0.13	Horz(CT)	n/a	-	n/a	n/a		
BCDL	10.0	Code	IRC2015/TPI2014	Matrix-MR							Weight: 60 lb	FT = 20%

LUMBER

TOP CHORD	2x4 SP No.2
BOT CHORD	2x4 SP No.2
WEBS	2x6 SP No.2 *Except* W2:2x4 SP No.3
OTHERS	2x4 SP No.3

BRACING

TOP CHORD	Structural wood sheathing directly applied or 6-0-0 oc purlins, except end verticals.
BOT CHORD	Rigid ceiling directly applied or 10-0-0 oc bracing.

REACTIONS All bearings 7-5-0.

(lb) - Max Horiz 12=193 (LC 10)
Max Uplift All uplift 100 (lb) or less at joint(s) 8, 9, 10 except 11=-532 (LC 10), 12=-203 (LC 8)
Max Grav All reactions 250 (lb) or less at joint(s) 8, 9, 10 except 11=344 (LC 8), 12=517 (LC 10)

FORCES (lb) - Max. Comp./Max. Ten. - All forces 250 (lb) or less except when shown.

TOP CHORD 2-12=-391/275, 2-3=-425/281
WEBS 3-11=-336/443

NOTES

1) Unbalanced roof live loads have been considered for this design.
2) Wind: ASCE 7-10; Vult=130mph (3-second gust) Vasd=103mph; TCDL=6.0psf; BCDL=6.0psf; h=35ft; Cat. II; Exp B; Enclosed; MWFRS (envelope) exterior zone and C-C Corner (3) -0-10-8 to 2-1-8, Exterior (2) 2-1-8 to 4-8-0, Corner (3) 4-8-0 to 7-8-0 zone; cantilever left and right exposed ; end vertical left exposed;C-C for members and forces & MWFRS for reactions shown; Lumber DOL=1.60 plate grip DOL=1.60
3) Truss designed for wind loads in the plane of the truss only.
4) Gable requires continuous bottom chord bearing.
5) Truss to be fully sheathed from one face or securely braced against lateral movement (i.e. diagonal web).
6) Gable studs spaced at 2-0-0 oc.
7) This truss has been designed for a 10.0 psf bottom chord live load nonconcurrent with any other live loads.
8) * This truss has been designed for a live load of 20.0psf on the bottom chord in all areas where a rectangle 3-06-00 tall by 2-00-00 wide will fit between the bottom chord and any other members.
9) Provide mechanical connection (by others) of truss to bearing plate capable of withstanding 100 lb uplift at joint(s) 8, 9, 10 except (jt=lb) 12=203, 11=532.
10) This truss is designed in accordance with the 2015 International Residential Code sections R502.11.1 and R802.10.2 and referenced standard ANSI/TPI 1.

NORTH CAROLINA PROFESSIONAL SEAL 054919 ENGINEER HUNTER B. DOSS
3/24/2025

Job	Truss	Truss Type	Qty	Ply	PBS/GUILFORD GEORGIAN RH ROOF
72507638	D2	Truss	3	1	Job Reference (optional)

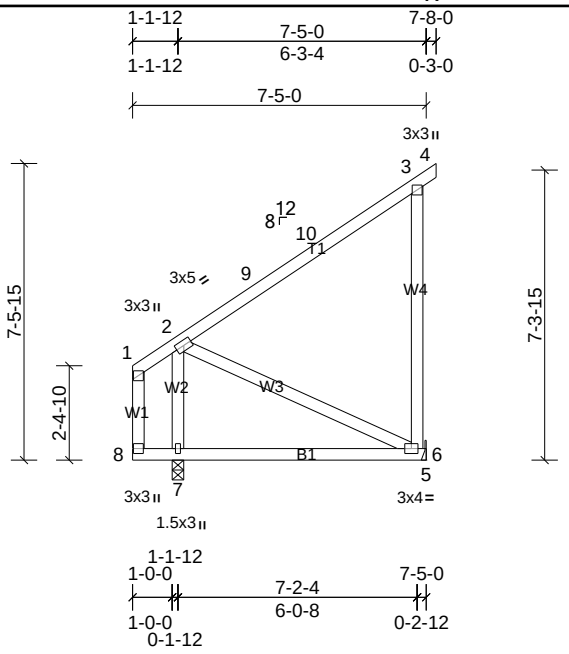

Loading	(psf)	Spacing	2-0-0	CSI		DEFL	in	(loc)	l/defl	L/d	PLATES	GRIP
TCLL (roof)	20.0	Plate Grip DOL	1.15	TC	0.42	Vert(LL)	-0.04	6-7	>999	240	MT20	244/190
TCDL	10.0	Lumber DOL	1.15	BC	0.28	Vert(CT)	-0.08	6-7	>918	180		
BCLL	0.0 *	Rep Stress Incr	YES	WB	0.21	Horz(CT)	0.00	6	n/a	n/a		
BCDL	10.0	Code	IRC2015/TPI2014	Matrix-MSH							Weight: 51 lb	FT = 20%

LUMBER

TOP CHORD	2x4 SP No.2
BOT CHORD	2x4 SP No.2
WEBS	2x4 SP No.3

BRACING

TOP CHORD	Structural wood sheathing directly applied or 6-0-0 oc purlins, except end verticals.
BOT CHORD	Rigid ceiling directly applied or 10-0-0 oc bracing.

REACTIONS (lb/size) 6=270/ Mechanical, (min. 0-1-8), 7=327/0-3-8, (min. 0-1-8)
Max Horiz 7=171 (LC 10)
Max Uplift 6=-206 (LC 10)
Max Grav 6=321 (LC 17), 7=327 (LC 1)

FORCES (lb) - Max. Comp./Max. Ten. - All forces 250 (lb) or less except when shown.
BOT CHORD 6-7=-264/243
WEBS 2-6=-247/284, 2-7=-299/77

NOTES

1) Unbalanced roof live loads have been considered for this design.
2) Wind: ASCE 7-10; Vult=130mph (3-second gust) Vasd=103mph; TCDL=6.0psf; BCDL=6.0psf; h=35ft; Cat. II; Exp B; Enclosed; MWFRS (envelope) exterior zone and C-C Exterior (2) 0-1-12 to 3-1-12, Interior (1) 3-1-12 to 4-8-0, Exterior (2) 4-8-0 to 7-8-0 zone; cantilever left and right exposed ; end vertical left exposed;C-C for members and forces & MWFRS for reactions shown; Lumber DOL=1.60 plate grip DOL=1.60
3) This truss has been designed for a 10.0 psf bottom chord live load nonconcurrent with any other live loads.
4) * This truss has been designed for a live load of 20.0psf on the bottom chord in all areas where a rectangle 3-06-00 tall by 2-00-00 wide will fit between the bottom chord and any other members.
5) Provide mechanical connection (by others) of truss to bearing plate capable of withstanding 206 lb uplift at joint 6.
6) This truss is designed in accordance with the 2015 International Residential Code sections R502.11.1 and R802.10.2 and referenced standard ANSI/TPI 1.

NORTH CAROLINA PROFESSIONAL SEAL 054919 ENGINEER HUNTER B. DOSS
3/24/2025

Job	Truss	Truss Type	Qty	Ply	PBS/GUILFORD GEORGIAN RH ROOF
72507638	E1	Truss	3	1	Job Reference (optional)

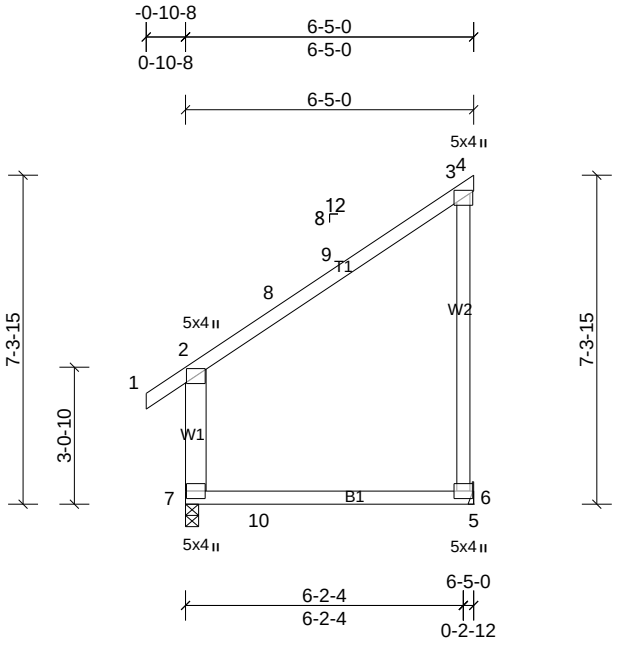

Loading	(psf)	Spacing	2-0-0	CSI		DEFL	in	(loc)	l/defl	L/d	PLATES	GRIP
TCLL (roof)	20.0	Plate Grip DOL	1.15	TC	0.86	Vert(LL)	-0.08	6-7	>872	240	MT20	244/190
TCDL	10.0	Lumber DOL	1.15	BC	0.51	Vert(CT)	-0.13	6-7	>550	180		
BCLL	0.0 *	Rep Stress Incr	YES	WB	0.00	Horz(CT)	n/a	-	n/a	n/a		
BCDL	10.0	Code	IRC2015/TPI2014	Matrix-MR							Weight: 39 lb	FT = 20%

LUMBER

TOP CHORD	2x4 SP No.2
BOT CHORD	2x4 SP No.2
WEBS	2x4 SP No.3 *Except* W1:2x6 SP No.2

BRACING

TOP CHORD	Structural wood sheathing directly applied or 6-0-0 oc purlins, except end verticals.
BOT CHORD	Rigid ceiling directly applied or 10-0-0 oc bracing.

REACTIONS (lb/size) 6=242/ Mechanical, (min. 0-1-8), 7=311/0-3-8, (min. 0-1-8)
Max Horiz 7=168 (LC 7)
Max Uplift 6=-187 (LC 10)
Max Grav 6=384 (LC 17), 7=321 (LC 2)

FORCES (lb) - Max. Comp./Max. Ten. - All forces 250 (lb) or less except when shown.
TOP CHORD 2-7=-264/46

NOTES

1) Unbalanced roof live loads have been considered for this design.
2) Wind: ASCE 7-10; Vult=130mph (3-second gust) Vasd=103mph; TCDL=6.0psf; BCDL=6.0psf; h=35ft; Cat. II; Exp B; Enclosed; MWFRS (envelope) exterior zone and C-C Exterior (2) -0-10-8 to 2-1-8, Interior (1) 2-1-8 to 3-5-0, Exterior (2) 3-5-0 to 6-5-0 zone; cantilever left and right exposed ; end vertical left exposed;C-C for members and forces & MWFRS for reactions shown; Lumber DOL=1.60 plate grip DOL=1.60
3) This truss has been designed for a 10.0 psf bottom chord live load nonconcurrent with any other live loads.
4) * This truss has been designed for a live load of 20.0psf on the bottom chord in all areas where a rectangle 3-06-00 tall by 2-00-00 wide will fit between the bottom chord and any other members, with BCDL = 10.0psf.
5) Provide mechanical connection (by others) of truss to bearing plate capable of withstanding 187 lb uplift at joint 6.
6) This truss is designed in accordance with the 2015 International Residential Code sections R502.11.1 and R802.10.2 and referenced standard ANSI/TPI 1.

NORTH CAROLINA PROFESSIONAL SEAL 054919 ENGINEER HUNTER B. DOSS
3/24/2025

Job	Truss	Truss Type	Qty	Ply	PBS/GUILFORD GEORGIAN RH ROOF
72507638	E1F	Truss	7	1	Job Reference (optional)

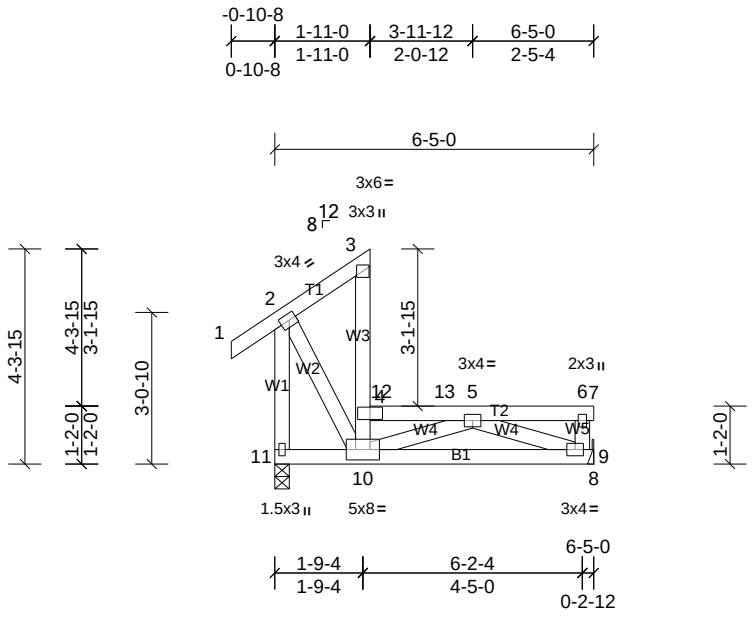

Plate Offsets (X, Y): [2:0-1-12,0-1-8]

Loading	(psf)	Spacing	1-7-3	CSI		DEFL	in	(loc)	l/defl	L/d	PLATES	GRIP
TCLL (roof)	20.0	Plate Grip DOL	1.00	TC	0.77	Vert(LL)	0.04	9-10	>999	240	MT20	244/190
TCDL	10.0	Lumber DOL	1.00	BC	0.75	Vert(CT)	-0.06	9-10	>999	180		
BCLL	0.0 *	Rep Stress Incr	NO	WB	0.17	Horz(CT)	0.00	9	n/a	n/a		
BCDL	10.0	Code	IRC2015/TPI2014	Matrix-MSH							Weight: 42 lb	FT = 20%

LUMBER

TOP CHORD	2x4 SP No.2
BOT CHORD	2x4 SP No.2
WEBS	2x4 SP No.3 *Except* W3:2x4 SP No.2

BRACING

TOP CHORD	Structural wood sheathing directly applied or 6-0-0 oc purlins, except end verticals, and 2-0-0 oc purlins (6-0-0 max.): 4-10, 4-7.
BOT CHORD	Rigid ceiling directly applied or 10-0-0 oc bracing.

REACTIONS (lb/size) 9=263/ Mechanical, (min. 0-1-8), 11=380/0-3-8, (min. 0-1-8)
Max Horiz 11=-184 (LC 8)
Max Uplift 9=-31 (LC 11)
Max Grav 9=448 (LC 17), 11=444 (LC 2)

FORCES (lb) - Max. Comp./Max. Ten. - All forces 250 (lb) or less except when shown.
TOP CHORD 4-10=-262/0, 4-12=-788/258, 12-13=-788/258, 5-13=-788/258, 2-11=-261/0
BOT CHORD 9-10=-183/770
WEBS 2-10=-20/273, 5-9=-716/194

NOTES

1) Unbalanced roof live loads have been considered for this design.
2) Wind: ASCE 7-10; Vult=130mph (3-second gust) Vasd=103mph; TCDL=6.0psf; BCDL=6.0psf; h=35ft; Cat. II; Exp B; Enclosed; MWFRS (envelope) exterior zone and C-C Exterior (2) -0-10-8 to 1-9-4, Interior (1) 1-9-4 to 3-5-0, Exterior (2) 3-5-0 to 6-5-0 zone; cantilever left and right exposed ; end vertical left and right exposed;C-C for members and forces & MWFRS for reactions shown; Lumber DOL=1.60 plate grip DOL=1.60
3) Provide adequate drainage to prevent water ponding.
4) This truss has been designed for a 10.0 psf bottom chord live load nonconcurrent with any other live loads.
5) * This truss has been designed for a live load of 20.0psf on the bottom chord in all areas where a rectangle 3-06-00 tall by 2-00-00 wide will fit between the bottom chord and any other members.
6) Provide mechanical connection (by others) of truss to bearing plate capable of withstanding 31 lb uplift at joint 9.
7) This truss is designed in accordance with the 2015 International Residential Code sections R502.11.1 and R802.10.2 and referenced standard ANSI/TPI 1.
8) Load case(s) 1, 2 has/have been modified. Building designer must review loads to verify that they are correct for the intended use of this truss.
9) Graphical purlin representation does not depict the size or the orientation of the purlin along the top and/or bottom chord.
10) Hanger(s) or other connection device(s) shall be provided sufficient to support concentrated load(s) 200 lb down at 2-1-12 on top chord. The design/selection of such connection device(s) is the responsibility of others.
11) In the LOAD CASE(S) section, loads applied to the face of the truss are noted as front (F) or back (B).

LOAD CASE(S) Standard

1) Dead + Roof Live (balanced): Lumber Increase=1.00, Plate Increase=1.00
   Uniform Loads (lb/ft)
   Vert: 1-2=-48, 2-3=-48, 4-6=-48, 6-7=-16, 8-11=-16
   Concentrated Loads (lb)
   Vert: 12=-200
2) Dead + 0.75 Roof Live (balanced) + 0.75 Attic Floor: Lumber Increase=1.00, Plate Increase=1.00
   Uniform Loads (lb/ft)
   Vert: 1-2=-40, 2-3=-40, 4-6=-100 (F=-60), 6-7=-76 (F=-60), 8-11=-16
   Concentrated Loads (lb)
   Vert: 12=-200

NORTH CAROLINA PROFESSIONAL SEAL 054919 ENGINEER HUNTER B. DOSS
3/24/2025

Job	Truss	Truss Type	Qty	Ply	PBS/GUILFORD GEORGIAN RH ROOF
72507638	E1FL	Truss	2	**2**	Job Reference (optional)

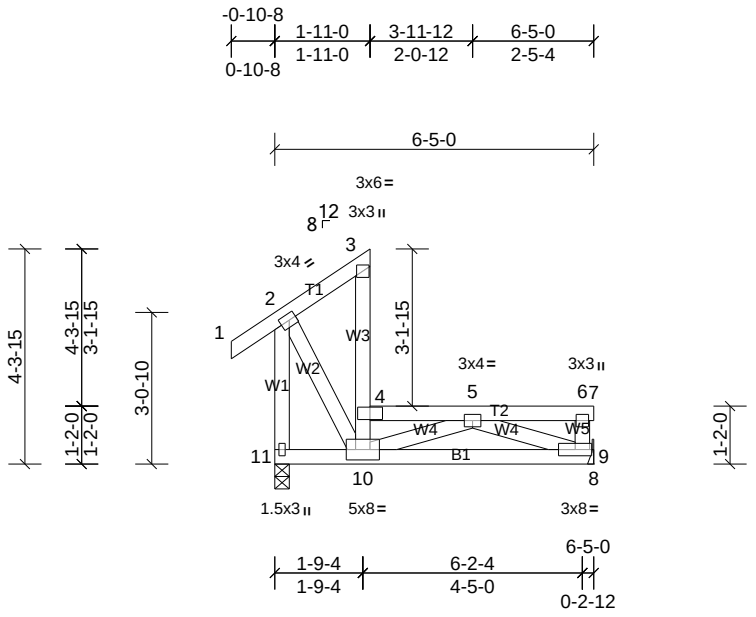

Plate Offsets (X, Y): [2:0-1-12,0-1-8]

Loading	(psf)	Spacing	1-7-3	CSI		DEFL	in	(loc)	l/defl	L/d	PLATES	GRIP
TCLL (roof)	20.0	Plate Grip DOL	1.00	TC	0.76	Vert(LL)	-0.03	9-10	>999	240	MT20	244/190
TCDL	10.0	Lumber DOL	1.00	BC	0.77	Vert(CT)	-0.07	9-10	>999	180		
BCLL	0.0 *	Rep Stress Incr	NO	WB	0.22	Horz(CT)	0.01	9	n/a	n/a		
BCDL	10.0	Code	IRC2015/TPI2014	Matrix-MSH							Weight: 85 lb	FT = 20%

LUMBER

TOP CHORD	2x4 SP No.2
BOT CHORD	2x4 SP No.2
WEBS	2x4 SP No.3 *Except* W3:2x4 SP No.2

BRACING

TOP CHORD	Structural wood sheathing directly applied or 6-0-0 oc purlins, except end verticals, and 2-0-0 oc purlins (6-0-0 max.): 4-10, 4-7.
BOT CHORD	Rigid ceiling directly applied or 10-0-0 oc bracing.

REACTIONS (lb/size) 9=1289/ Mechanical, (min. 0-1-8), 11=826/0-3-8, (min. 0-1-8)
Max Horiz 11=-184 (LC 6)
Max Grav 9=1369 (LC 15), 11=833 (LC 2)

FORCES (lb) - Max. Comp./Max. Ten. - All forces 250 (lb) or less except when shown.
TOP CHORD 4-10=-395/0, 4-5=-1435/0, 5-6=-253/0, 6-9=-573/0, 2-11=-457/0
BOT CHORD 9-10=0/2057
WEBS 2-10=0/380, 5-10=-801/0, 5-9=-1935/0

NOTES

1) 2-ply truss to be connected together with 10d (0.131"x3") nails as follows:
Top chords connected as follows: 2x4 - 1 row at 0-9-0 oc.
Bottom chords connected as follows: 2x4 - 1 row at 0-9-0 oc.
Web connected as follows: 2x4 - 1 row at 0-9-0 oc.
2) All loads are considered equally applied to all plies, except if noted as front (F) or back (B) face in the LOAD CASE(S) section. Ply to ply connections have been provided to distribute only loads noted as (F) or (B), unless otherwise indicated.
3) Unbalanced roof live loads have been considered for this design.
4) Wind: ASCE 7-10; Vult=130mph (3-second gust) Vasd=103mph; TCDL=6.0psf; BCDL=6.0psf; h=35ft; Cat. II; Exp B; Enclosed; MWFRS (envelope) exterior zone; cantilever left and right exposed ; end vertical left and right exposed; Lumber DOL=1.60 plate grip DOL=1.60
5) Provide adequate drainage to prevent water ponding.
6) This truss has been designed for a 10.0 psf bottom chord live load nonconcurrent with any other live loads.
7) * This truss has been designed for a live load of 20.0psf on the bottom chord in all areas where a rectangle 3-06-00 tall by 2-00-00 wide will fit between the bottom chord and any other members.
8) This truss is designed in accordance with the 2015 International Residential Code sections R502.11.1 and R802.10.2 and referenced standard ANSI/TPI 1.
9) Load case(s) 1, 2 has/have been modified. Building designer must review loads to verify that they are correct for the intended use of this truss.
10) Graphical purlin representation does not depict the size or the orientation of the purlin along the top and/or bottom chord.

LOAD CASE(S) Standard

1) Dead + Roof Live (balanced): Lumber Increase=1.00, Plate Increase=1.00
Uniform Loads (lb/ft)
Vert: 1-2=-48, 2-3=-48, 4-6=-408, 6-7=-376, 8-11=-16
2) Dead + 0.75 Roof Live (balanced) + 0.75 Attic Floor: Lumber Increase=1.00, Plate Increase=1.00
Uniform Loads (lb/ft)
Vert: 1-2=-40, 2-3=-40, 4-6=-425, 6-7=-401, 8-11=-16

NORTH CAROLINA PROFESSIONAL SEAL 054919 ENGINEER HUNTER B. DOSS
3/24/2025

Job	Truss	Truss Type	Qty	Ply	PBS/GUILFORD GEORGIAN RH ROOF
72507638	E1G	Truss	1	1	Job Reference (optional)

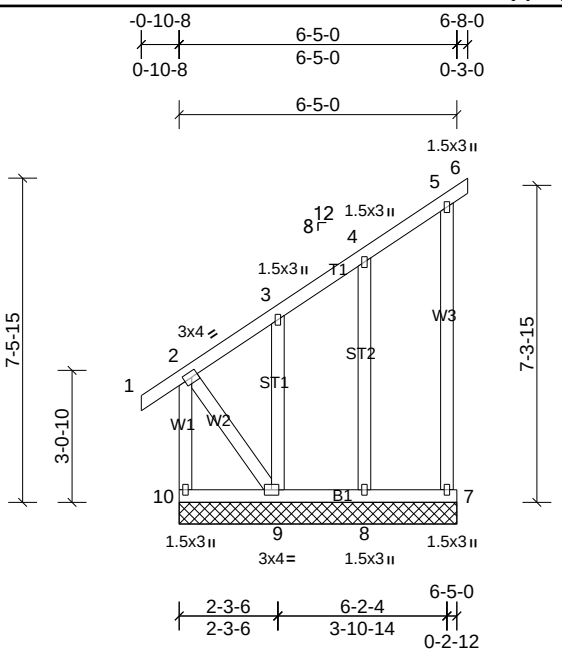

Plate Offsets (X, Y): [2:0-1-12,0-1-8]

Loading	(psf)	Spacing	2-0-0	CSI		DEFL	in	(loc)	l/defl	L/d	PLATES	GRIP
TCLL (roof)	20.0	Plate Grip DOL	1.15	TC	0.14	Vert(LL)	n/a	-	n/a	999	MT20	244/190
TCDL	10.0	Lumber DOL	1.15	BC	0.05	Vert(CT)	n/a	-	n/a	999		
BCLL	0.0 *	Rep Stress Incr	YES	WB	0.15	Horz(CT)	0.00	7	n/a	n/a		
BCDL	10.0	Code	IRC2015/TPI2014	Matrix-MSH							Weight: 56 lb	FT = 20%

LUMBER

TOP CHORD	2x4 SP No.2
BOT CHORD	2x4 SP No.2
WEBS	2x4 SP No.3
OTHERS	2x4 SP No.3

BRACING

TOP CHORD	Structural wood sheathing directly applied or 6-0-0 oc purlins, except end verticals.
BOT CHORD	Rigid ceiling directly applied or 10-0-0 oc bracing.

REACTIONS All bearings 6-5-0.

(lb) - Max Horiz 10=176 (LC 7)
Max Uplift All uplift 100 (lb) or less at joint(s) 7, 8, 10 except 9=-301 (LC 10)
Max Grav All reactions 250 (lb) or less at joint(s) 7, 8 except 9=283 (LC 17), 10=286 (LC 10)

FORCES (lb) - Max. Comp./Max. Ten. - All forces 250 (lb) or less except when shown.

TOP CHORD	2-10=-406/247
BOT CHORD	9-10=-304/168
WEBS	2-9=-277/504

NOTES

1) Unbalanced roof live loads have been considered for this design.
2) Wind: ASCE 7-10; Vult=130mph (3-second gust) Vasd=103mph; TCDL=6.0psf; BCDL=6.0psf; h=35ft; Cat. II; Exp B; Enclosed; MWFRS (envelope) exterior zone and C-C Corner (3) -0-10-8 to 2-3-6, Exterior (2) 2-3-6 to 3-8-0, Corner (3) 3-8-0 to 6-8-0 zone; cantilever left and right exposed ; end vertical left exposed;C-C for members and forces & MWFRS for reactions shown; Lumber DOL=1.60 plate grip DOL=1.60
3) Truss designed for wind loads in the plane of the truss only.
4) Gable requires continuous bottom chord bearing.
5) Truss to be fully sheathed from one face or securely braced against lateral movement (i.e. diagonal web).
6) Gable studs spaced at 2-0-0 oc.
7) This truss has been designed for a 10.0 psf bottom chord live load nonconcurrent with any other live loads.
8) * This truss has been designed for a live load of 20.0psf on the bottom chord in all areas where a rectangle 3-06-00 tall by 2-00-00 wide will fit between the bottom chord and any other members.
9) Provide mechanical connection (by others) of truss to bearing plate capable of withstanding 100 lb uplift at joint(s) 10, 7, 8 except (jt=lb) 9=300.
10) This truss is designed in accordance with the 2015 International Residential Code sections R502.11.1 and R802.10.2 and referenced standard ANSI/TPI 1.

NORTH CAROLINA PROFESSIONAL SEAL 054919 ENGINEER HUNTER B. DOSS
3/24/2025

Job	Truss	Truss Type	Qty	Ply	PBS/GUILFORD GEORGIAN RH ROOF
72507638	G1	Truss	2	1	Job Reference (optional)

ID:jLjqaRqHkckbXrp0av5UkRyHceJ-O_KcZteHaMPM7G0Ml0bLR?ONS1Rfy4BVLRwqzEzXkDg

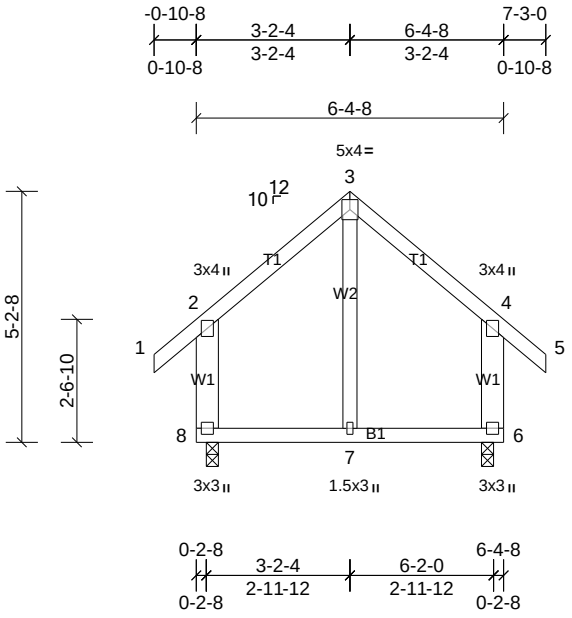

Loading	(psf)	Spacing	2-0-0	CSI		DEFL	in	(loc)	l/defl	L/d	PLATES	GRIP
TCLL (roof)	20.0	Plate Grip DOL	1.15	TC	0.22	Vert(LL)	0.02	6-7	>999	240	MT20	244/190
TCDL	10.0	Lumber DOL	1.15	BC	0.18	Vert(CT)	-0.02	7	>999	180		
BCLL	0.0 *	Rep Stress Incr	YES	WB	0.08	Horz(CT)	0.00	6	n/a	n/a		
BCDL	10.0	Code	IRC2015/TPI2014	Matrix-MR							Weight: 43 lb	FT = 20%

LUMBER

TOP CHORD	2x4 SP No.2
BOT CHORD	2x4 SP No.2
WEBS	2x6 SP No.2 *Except* W2:2x4 SP No.3

BRACING

TOP CHORD	Structural wood sheathing directly applied or 6-0-0 oc purlins, except end verticals.
BOT CHORD	Rigid ceiling directly applied or 10-0-0 oc bracing.

REACTIONS (lb/size) 6=303/0-3-0, (min. 0-1-8), 8=303/0-3-0, (min. 0-1-8)
Max Horiz 8=178 (LC 9)
Max Uplift 6=-54 (LC 7), 8=-54 (LC 6)

FORCES (lb) - Max. Comp./Max. Ten. - All forces 250 (lb) or less except when shown.

NOTES

1) Unbalanced roof live loads have been considered for this design.
2) Wind: ASCE 7-10; Vult=130mph (3-second gust) Vasd=103mph; TCDL=6.0psf; BCDL=6.0psf; h=35ft; Cat. II; Exp B; Enclosed; MWFRS (envelope) exterior zone and C-C Exterior (2) zone; cantilever left and right exposed ; end vertical left and right exposed; porch left and right exposed;C-C for members and forces & MWFRS for reactions shown; Lumber DOL=1.60 plate grip DOL=1.60
3) This truss has been designed for a 10.0 psf bottom chord live load nonconcurrent with any other live loads.
4) * This truss has been designed for a live load of 20.0psf on the bottom chord in all areas where a rectangle 3-06-00 tall by 2-00-00 wide will fit between the bottom chord and any other members.
5) Provide mechanical connection (by others) of truss to bearing plate capable of withstanding 54 lb uplift at joint 8 and 54 lb uplift at joint 6.
6) This truss is designed in accordance with the 2015 International Residential Code sections R502.11.1 and R802.10.2 and referenced standard ANSI/TPI 1.

NORTH CAROLINA PROFESSIONAL SEAL 054919 ENGINEER HUNTER B. DOSS
3/24/2025

Job	Truss	Truss Type	Qty	Ply	PBS/GUILFORD GEORGIAN RH ROOF
72507638	G1G	Truss	1	1	Job Reference (optional)

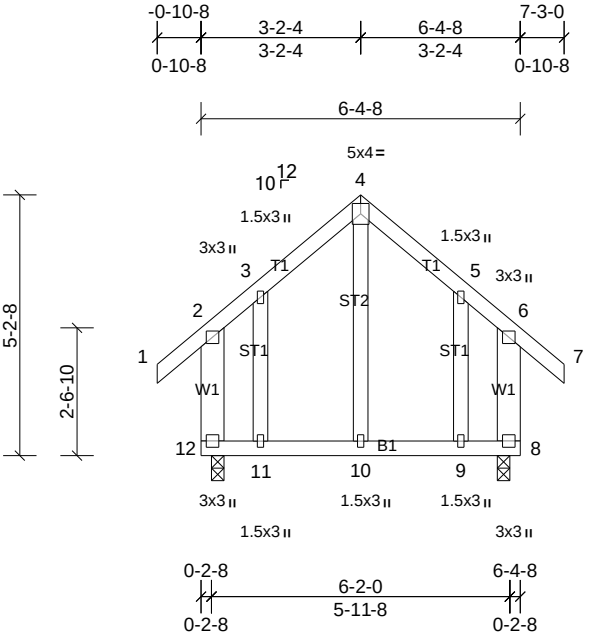

Loading	(psf)	Spacing	2-0-0	CSI		DEFL	in	(loc)	l/defl	L/d	PLATES	GRIP
TCLL (roof)	20.0	Plate Grip DOL	1.15	TC	0.20	Vert(LL)	0.02	10-11	>999	240	MT20	244/190
TCDL	10.0	Lumber DOL	1.15	BC	0.18	Vert(CT)	-0.02	10	>999	180		
BCLL	0.0 *	Rep Stress Incr	YES	WB	0.08	Horz(CT)	0.00	8	n/a	n/a		
BCDL	10.0	Code	IRC2015/TPI2014	Matrix-MR							Weight: 52 lb	FT = 20%

LUMBER

TOP CHORD	2x4 SP No.2
BOT CHORD	2x4 SP No.2
WEBS	2x6 SP No.2
OTHERS	2x4 SP No.3

BRACING

TOP CHORD	Structural wood sheathing directly applied or 6-0-0 oc purlins, except end verticals.
BOT CHORD	Rigid ceiling directly applied or 10-0-0 oc bracing.

REACTIONS (lb/size) 8=303/0-3-0, (min. 0-1-8), 12=303/0-3-0, (min. 0-1-8)
Max Horiz 12=178 (LC 9)
Max Uplift 8=-54 (LC 7), 12=-54 (LC 6)

FORCES (lb) - Max. Comp./Max. Ten. - All forces 250 (lb) or less except when shown.

NOTES

1) Unbalanced roof live loads have been considered for this design.
2) Wind: ASCE 7-10; Vult=130mph (3-second gust) Vasd=103mph; TCDL=6.0psf; BCDL=6.0psf; h=35ft; Cat. II; Exp B; Enclosed; MWFRS (envelope) exterior zone and C-C Exterior (2) zone; cantilever left and right exposed ; end vertical left and right exposed; porch left and right exposed;C-C for members and forces & MWFRS for reactions shown; Lumber DOL=1.60 plate grip DOL=1.60
3) Truss designed for wind loads in the plane of the truss only.
4) Truss to be fully sheathed from one face or securely braced against lateral movement (i.e. diagonal web).
5) Gable studs spaced at 2-0-0 oc.
6) This truss has been designed for a 10.0 psf bottom chord live load nonconcurrent with any other live loads.
7) * This truss has been designed for a live load of 20.0psf on the bottom chord in all areas where a rectangle 3-06-00 tall by 2-00-00 wide will fit between the bottom chord and any other members.
8) Provide mechanical connection (by others) of truss to bearing plate capable of withstanding 54 lb uplift at joint 12 and 54 lb uplift at joint 8.
9) This truss is designed in accordance with the 2015 International Residential Code sections R502.11.1 and R802.10.2 and referenced standard ANSI/TPI 1.

NORTH CAROLINA PROFESSIONAL SEAL 054919 3/24/2025 ENGINEER HUNTER B. DOSS

Job	Truss	Truss Type	Qty	Ply	PBS/GUILFORD GEORGIAN RH ROOF
72507638	H1	Truss	10	1	Job Reference (optional)

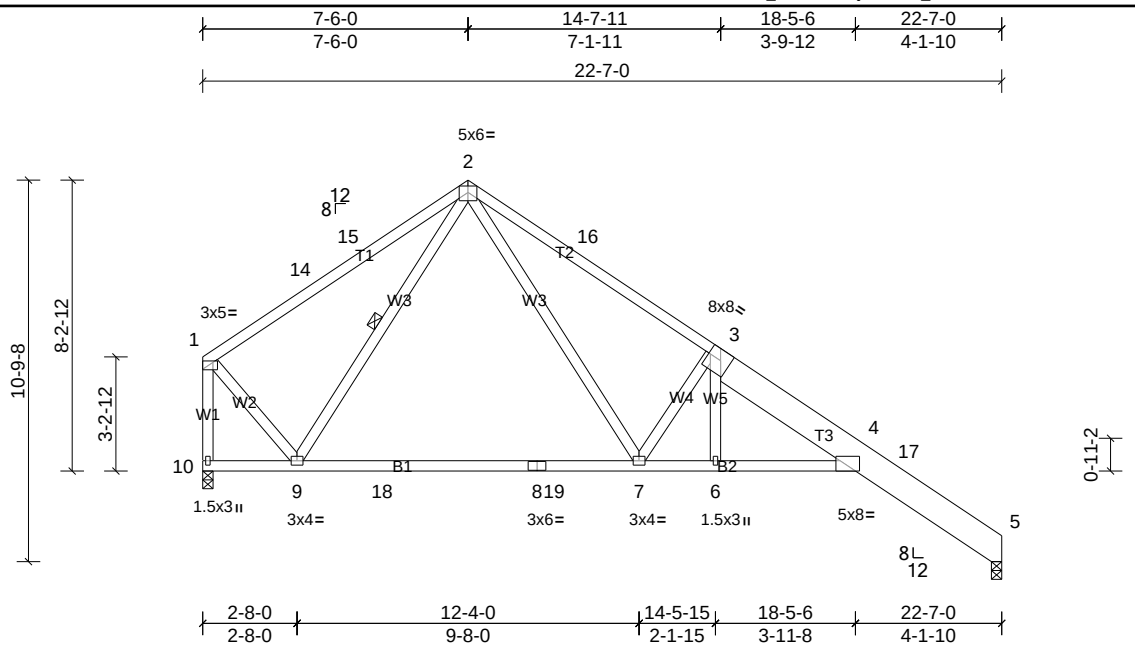

Plate Offsets (X, Y): [1:Edge,0-2-8], [3:0-3-4,Edge]

Loading	(psf)	Spacing	1-7-3	CSI		DEFL	in	(loc)	l/defl	L/d	PLATES	GRIP
TCLL (roof)	20.0	Plate Grip DOL	1.15	TC	0.77	Vert(LL)	-0.22	7-9	>999	240	MT20	244/190
TCDL	10.0	Lumber DOL	1.15	BC	0.77	Vert(CT)	-0.42	7-9	>635	180		
BCLL	0.0 *	Rep Stress Incr	YES	WB	0.33	Horz(CT)	0.19	5	n/a	n/a		
BCDL	10.0	Code	IRC2015/TPI2014	Matrix-MSH							Weight: 139 lb	FT = 20%

LUMBER

TOP CHORD	2x4 SP No.2 *Except* T3:2x10 SP No.1
BOT CHORD	2x4 SP No.2
WEBS	2x4 SP No.3

BRACING

TOP CHORD	Structural wood sheathing directly applied or 4-9-4 oc purlins, except end verticals.
BOT CHORD	Rigid ceiling directly applied or 10-0-0 oc bracing.
WEBS	1 Row at midpt 2-9

REACTIONS (lb/size) 5=725/0-3-8, (min. 0-1-8), 10=714/0-3-8, (min. 0-1-8)
Max Horiz 10=-239 (LC 6)
Max Uplift 5=-106 (LC 11), 10=-76 (LC 11)
Max Grav 5=732 (LC 18), 10=725 (LC 18)

FORCES (lb) - Max. Comp./Max. Ten. - All forces 250 (lb) or less except when shown.

TOP CHORD	1-14=-529/112, 14-15=-447/116, 2-15=-432/135, 2-16=-1091/219, 3-16=-1183/203, 3-4=-1247/194, 4-17=-292/106, 5-17=-393/94, 1-10=-794/81
BOT CHORD	9-18=0/522, 8-18=0/522, 8-19=0/522, 7-19=0/522, 6-7=-67/1238, 4-6=-66/1236
WEBS	1-9=0/571, 2-7=-146/893, 3-7=-652/268

NOTES

1) Unbalanced roof live loads have been considered for this design.
2) Wind: ASCE 7-10; Vult=130mph (3-second gust) Vasd=103mph; TCDL=6.0psf; BCDL=6.0psf; h=35ft; Cat. II; Exp B; Enclosed; MWFRS (envelope) exterior zone and C-C Exterior (2) 0-1-12 to 3-1-12, Interior (1) 3-1-12 to 4-6-0, Exterior (2) 4-6-0 to 10-6-0, Interior (1) 10-6-0 to 19-5-4, Exterior (2) 19-5-4 to 22-5-4 zone; cantilever left and right exposed ; end vertical left and right exposed;C-C for members and forces & MWFRS for reactions shown; Lumber DOL=1.60 plate grip DOL=1.60
3) This truss has been designed for a 10.0 psf bottom chord live load nonconcurrent with any other live loads.
4) * This truss has been designed for a live load of 20.0psf on the bottom chord in all areas where a rectangle 3-06-00 tall by 2-00-00 wide will fit between the bottom chord and any other members, with BCDL = 10.0psf.
5) Bearing at joint(s) 5 considers parallel to grain value using ANSI/TPI 1 angle to grain formula. Building designer should verify capacity of bearing surface.
6) Provide mechanical connection (by others) of truss to bearing plate capable of withstanding 76 lb uplift at joint 10 and 106 lb uplift at joint 5.
7) This truss is designed in accordance with the 2015 International Residential Code sections R502.11.1 and R802.10.2 and referenced standard ANSI/TPI 1.

Job	Truss	Truss Type	Qty	Ply	PBS/GUILFORD GEORGIAN RH ROOF
72507638	H1G	Truss	2	1	Job Reference (optional)

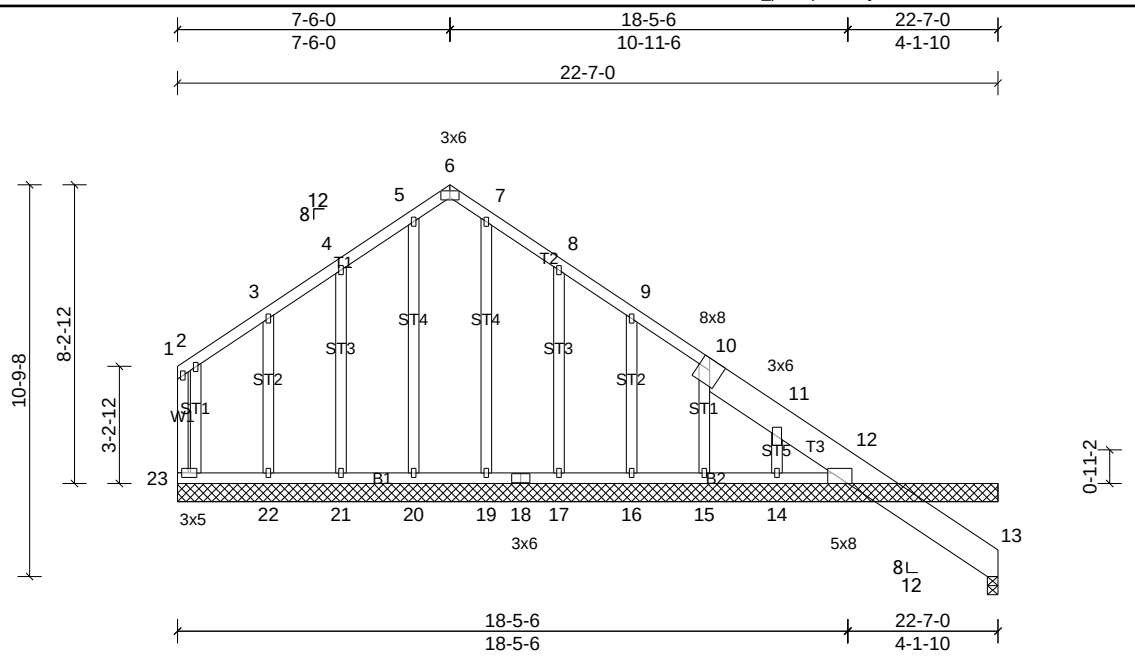

Plate Offsets (X, Y): [6:0-3-0,Edge]

Loading	(psf)	Spacing	1-7-3	CSI		DEFL	in	(loc)	l/defl	L/d	PLATES	GRIP
TCLL (roof)	20.0	Plate Grip DOL	1.15	TC	0.13	Vert(LL)	0.00	22-23	>999	240	MT20	244/190
TCDL	10.0	Lumber DOL	1.15	BC	0.05	Vert(CT)	0.00	22-23	>999	180		
BCLL	0.0 *	Rep Stress Incr	YES	WB	0.12	Horz(CT)	0.01	13	n/a	n/a		
BCDL	10.0	Code	IRC2015/TPI2014	Matrix-MSH							Weight: 159 lb	FT = 20%

LUMBER

TOP CHORD	2x4 SP No.2 *Except* T3:2x10 SP No.2
BOT CHORD	2x4 SP No.2
WEBS	2x4 SP No.3
OTHERS	2x4 SP No.3

BRACING

TOP CHORD	Structural wood sheathing directly applied or 6-0-0 oc purlins, except end verticals.
BOT CHORD	Rigid ceiling directly applied or 10-0-0 oc bracing.

REACTIONS All bearings 22-7-0.

(lb) - Max Horiz 23=-239 (LC 6)

Max Uplift All uplift 100 (lb) or less at joint(s) 12, 13, 14, 15, 16, 17, 19, 21, 22, 23, 24

Max Grav All reactions 250 (lb) or less at joint(s) 13, 14, 15, 16, 17, 19, 20, 21, 22, 23 except 12=309 (LC 17), 24=309 (LC 17)

FORCES (lb) - Max. Comp./Max. Ten. - All forces 250 (lb) or less except when shown.

NOTES

1) Unbalanced roof live loads have been considered for this design.
2) Wind: ASCE 7-10; Vult=130mph (3-second gust) Vasd=103mph; TCDL=6.0psf; BCDL=6.0psf; h=35ft; Cat. II; Exp B; Enclosed; MWFRS (envelope) exterior zone and C-C Corner (3) 0-1-12 to 3-1-12, Exterior (2) 3-1-12 to 4-6-0, Corner (3) 4-6-0 to 10-6-0, Exterior (2) 10-6-0 to 19-5-4, Corner (3) 19-5-4 to 22-5-4 zone; cantilever left and right exposed ; end vertical left and right exposed;C-C for members and forces & MWFRS for reactions shown; Lumber DOL=1.60 plate grip DOL=1.60
3) Truss designed for wind loads in the plane of the truss only.
4) All plates are 1.5x3 MT20 unless otherwise indicated.
5) Gable studs spaced at 2-0-0 oc.
6) This truss has been designed for a 10.0 psf bottom chord live load nonconcurrent with any other live loads.
7) * This truss has been designed for a live load of 20.0psf on the bottom chord in all areas where a rectangle 3-06-00 tall by 2-00-00 wide will fit between the bottom chord and any other members.
8) Provide mechanical connection (by others) of truss to bearing plate capable of withstanding 100 lb uplift at joint(s) 23, 19, 21, 22, 17, 16, 15, 14, 12, 13, 12.
9) This truss is designed in accordance with the 2015 International Residential Code sections R502.11.1 and R802.10.2 and referenced standard ANSI/TPI 1.

Job	Truss	Truss Type	Qty	Ply	PBS/GUILFORD GEORGIAN RH ROOF
72507638	H1L	Truss	2	**3**	Job Reference (optional)

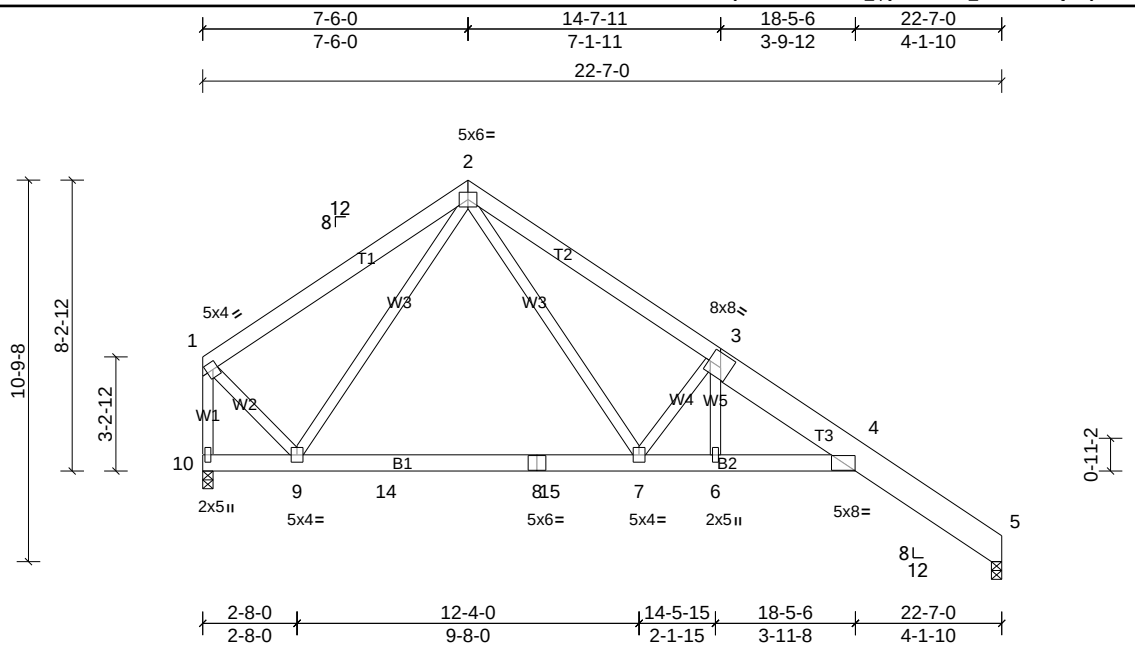

Plate Offsets (X, Y): [1:0-1-12,0-2-8], [3:0-3-4,0-3-8]

Loading	(psf)	Spacing	4-0-0	CSI		DEFL	in	(loc)	l/defl	L/d	PLATES	GRIP
TCLL (roof)	20.0	Plate Grip DOL	1.15	TC	0.74	Vert(LL)	-0.11	6-13	>999	240	MT20	244/190
TCDL	10.0	Lumber DOL	1.15	BC	0.48	Vert(CT)	-0.23	6-13	>999	180		
BCLL	0.0 *	Rep Stress Incr	NO	WB	0.28	Horz(CT)	0.16	5	n/a	n/a		
BCDL	10.0	Code	IRC2015/TPI2014	Matrix-MSH							Weight: 504 lb	FT = 20%

LUMBER

TOP CHORD	2x6 SP No.2 *Except* T3:2x10 SP No.1
BOT CHORD	2x6 SP No.2
WEBS	2x4 SP No.3

BRACING

TOP CHORD	2-0-0 oc purlins (6-0-0 max.), except end verticals (Switched from sheeted: Spacing > 2-0-0).
BOT CHORD	Rigid ceiling directly applied or 10-0-0 oc bracing.

REACTIONS (lb/size) 5=1813/0-3-8, (min. 0-1-8), 10=1786/0-3-8, (min. 0-1-8)
Max Horiz 10=-587 (LC 4)
Max Uplift 5=-268 (LC 9), 10=-186 (LC 9)
Max Grav 5=1829 (LC 16), 10=1803 (LC 16)

FORCES (lb) - Max. Comp./Max. Ten. - All forces 250 (lb) or less except when shown.

TOP CHORD	1-2=-1325/245, 2-3=-3041/541, 3-4=-3419/507, 4-5=-982/266, 1-10=-1958/155
BOT CHORD	9-10=-431/560, 9-14=0/1321, 8-14=0/1321, 8-15=0/1321, 7-15=0/1321, 6-7=-176/3337, 4-6=-173/3318
WEBS	1-9=0/1421, 2-9=-599/215, 2-7=-353/2286, 3-7=-1830/670, 3-6=-49/376

NOTES

1) 3-ply truss to be connected together with 10d (0.131"x3") nails as follows:
Top chords connected as follows: 2x6 - 2 rows staggered at 0-9-0 oc, 2x10 - 2 rows staggered at 0-9-0 oc, 2x4 - 1 row at 0-9-0 oc.
Bottom chords connected as follows: 2x6 - 2 rows staggered at 0-9-0 oc.
Web connected as follows: 2x4 - 1 row at 0-9-0 oc.
2) All loads are considered equally applied to all plies, except if noted as front (F) or back (B) face in the LOAD CASE(S) section. Ply to ply connections have been provided to distribute only loads noted as (F) or (B), unless otherwise indicated.
3) Unbalanced roof live loads have been considered for this design.
4) Wind: ASCE 7-10; Vult=130mph (3-second gust) Vasd=103mph; TCDL=6.0psf; BCDL=6.0psf; h=35ft; Cat. II; Exp B; Enclosed; MWFRS (envelope) exterior zone; cantilever left and right exposed ; end vertical left and right exposed; Lumber DOL=1.60 plate grip DOL=1.60
5) This truss has been designed for a 10.0 psf bottom chord live load nonconcurrent with any other live loads.
6) * This truss has been designed for a live load of 20.0psf on the bottom chord in all areas where a rectangle 3-06-00 tall by 2-00-00 wide will fit between the bottom chord and any other members, with BCDL = 10.0psf.
7) Bearing at joint(s) 5 considers parallel to grain value using ANSI/TPI 1 angle to grain formula. Building designer should verify capacity of bearing surface.
8) Provide mechanical connection (by others) of truss to bearing plate capable of withstanding 186 lb uplift at joint 10 and 268 lb uplift at joint 5.
9) This truss is designed in accordance with the 2015 International Residential Code sections R502.11.1 and R802.10.2 and referenced standard ANSI/TPI 1.
10) Graphical purlin representation does not depict the size or the orientation of the purlin along the top and/or bottom chord.

Job	Truss	Truss Type	Qty	Ply	PBS/GUILFORD GEORGIAN RH ROOF
72507638	H1P	Truss	3	1	Job Reference (optional)

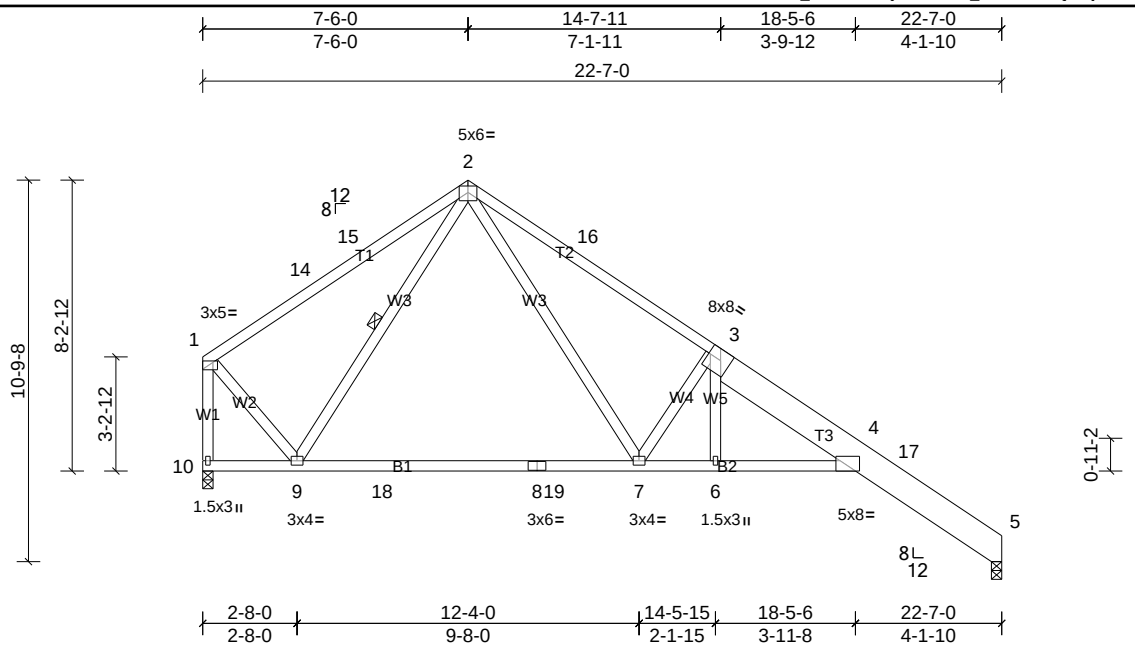

Plate Offsets (X, Y): [1:Edge,0-2-8], [3:0-3-4,Edge]

Loading	(psf)	Spacing	1-7-3	CSI		DEFL	in	(loc)	l/defl	L/d	PLATES	GRIP
TCLL (roof)	20.0	Plate Grip DOL	1.15	TC	0.77	Vert(LL)	-0.22	7-9	>999	240	MT20	244/190
TCDL	10.0	Lumber DOL	1.15	BC	0.77	Vert(CT)	-0.42	7-9	>635	180		
BCLL	0.0 *	Rep Stress Incr	YES	WB	0.33	Horz(CT)	0.19	5	n/a	n/a		
BCDL	10.0	Code	IRC2015/TPI2014	Matrix-MSH							Weight: 139 lb	FT = 20%

LUMBER

TOP CHORD	2x4 SP No.2 *Except* T3:2x10 SP No.1
BOT CHORD	2x4 SP No.2
WEBS	2x4 SP No.3

BRACING

TOP CHORD	Structural wood sheathing directly applied or 4-9-4 oc purlins, except end verticals.
BOT CHORD	Rigid ceiling directly applied or 10-0-0 oc bracing.
WEBS	1 Row at midpt 2-9

REACTIONS (lb/size) 5=725/0-3-8, (min. 0-1-8), 10=714/0-3-8, (min. 0-1-8)
Max Horiz 10=-239 (LC 6)
Max Uplift 5=-106 (LC 11), 10=-76 (LC 11)
Max Grav 5=732 (LC 18), 10=725 (LC 18)

FORCES (lb) - Max. Comp./Max. Ten. - All forces 250 (lb) or less except when shown.
TOP CHORD 1-14=-529/112, 14-15=-447/116, 2-15=-432/135, 2-16=-1091/219, 3-16=-1183/203, 3-4=-1247/194, 4-17=-292/106, 5-17=-393/94, 1-10=-794/81
BOT CHORD 9-18=0/522, 8-18=0/522, 8-19=0/522, 7-19=0/522, 6-7=-67/1238, 4-6=-66/1236
WEBS 1-9=0/571, 2-7=-146/893, 3-7=-652/268

NOTES

1) Unbalanced roof live loads have been considered for this design.
2) Wind: ASCE 7-10; Vult=130mph (3-second gust) Vasd=103mph; TCDL=6.0psf; BCDL=6.0psf; h=35ft; Cat. II; Exp B; Enclosed; MWFRS (envelope) exterior zone and C-C Exterior (2) 0-1-12 to 3-1-12, Interior (1) 3-1-12 to 4-6-0, Exterior (2) 4-6-0 to 10-6-0, Interior (1) 10-6-0 to 19-5-4, Exterior (2) 19-5-4 to 22-5-4 zone; cantilever left and right exposed ; end vertical left and right exposed;C-C for members and forces & MWFRS for reactions shown; Lumber DOL=1.60 plate grip DOL=1.60
3) This truss has been designed for a 10.0 psf bottom chord live load nonconcurrent with any other live loads.
4) * This truss has been designed for a live load of 20.0psf on the bottom chord in all areas where a rectangle 3-06-00 tall by 2-00-00 wide will fit between the bottom chord and any other members, with BCDL = 10.0psf.
5) Bearing at joint(s) 5 considers parallel to grain value using ANSI/TPI 1 angle to grain formula. Building designer should verify capacity of bearing surface.
6) Provide mechanical connection (by others) of truss to bearing plate capable of withstanding 76 lb uplift at joint 10 and 106 lb uplift at joint 5.
7) This truss is designed in accordance with the 2015 International Residential Code sections R502.11.1 and R802.10.2 and referenced standard ANSI/TPI 1.

Job	Truss	Truss Type	Qty	Ply	PBS/GUILFORD GEORGIAN RH ROOF
72507638	H2	Truss	2	1	Job Reference (optional)

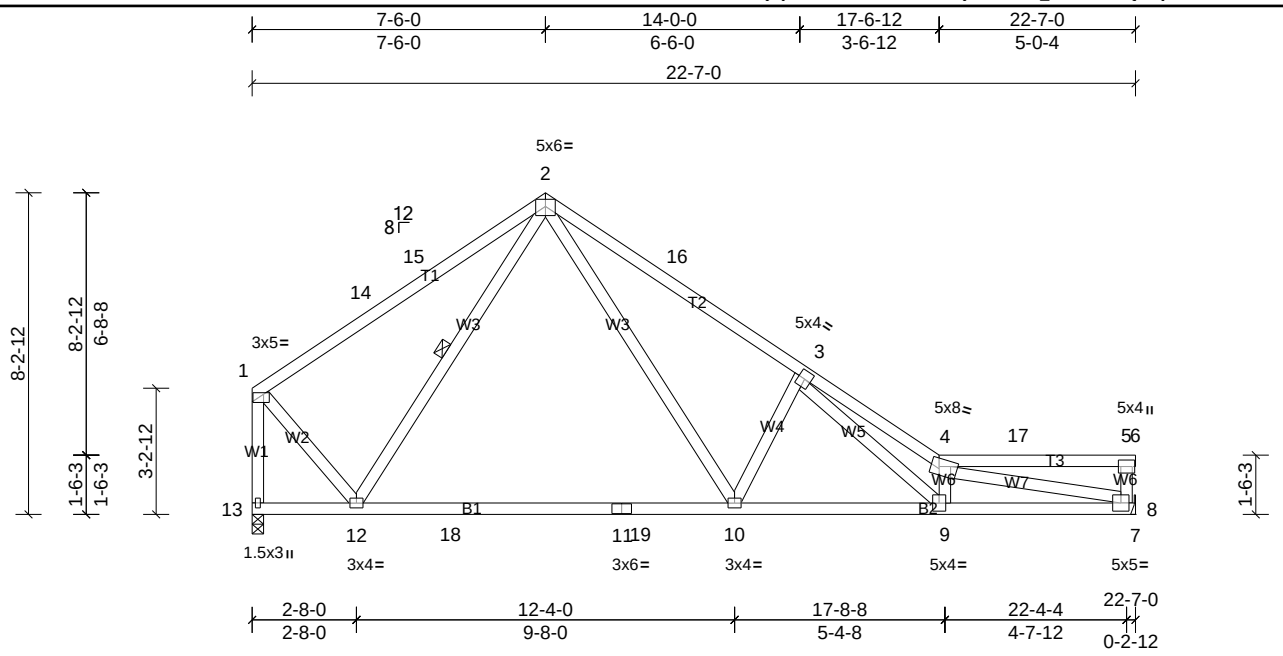

Plate Offsets (X, Y): [1:0-3-4,0-2-8], [4:0-2-8,0-2-8]

Loading	(psf)	Spacing	1-7-3	CSI		DEFL	in	(loc)	l/defl	L/d	PLATES	GRIP
TCLL (roof)	20.0	Plate Grip DOL	1.15	TC	0.66	Vert(LL)	-0.24	10-12	>999	240	MT20	244/190
TCDL	10.0	Lumber DOL	1.15	BC	0.81	Vert(CT)	-0.43	10-12	>623	180		
BCLL	0.0 *	Rep Stress Incr	YES	WB	0.88	Horz(CT)	0.03	8	n/a	n/a		
BCDL	10.0	Code	IRC2015/TPI2014	Matrix-MSH							Weight: 131 lb	FT = 20%

LUMBER

TOP CHORD	2x4 SP No.2
BOT CHORD	2x4 SP No.2
WEBS	2x4 SP No.3

BRACING

TOP CHORD	Structural wood sheathing directly applied or 3-2-14 oc purlins, except end verticals, and 2-0-0 oc purlins (6-0-0 max.): 4-6.
BOT CHORD	Rigid ceiling directly applied or 10-0-0 oc bracing.
WEBS	1 Row at midpt 2-12

REACTIONS (lb/size) 8=718/ Mechanical, (min. 0-1-8), 13=710/0-3-8, (min. 0-1-8)
Max Horiz 13=-185 (LC 8)
Max Uplift 8=-111 (LC 11), 13=-79 (LC 11)

FORCES (lb) - Max. Comp./Max. Ten. - All forces 250 (lb) or less except when shown.

TOP CHORD	1-14=-527/113, 14-15=-446/117, 2-15=-431/136, 2-16=-1037/234, 3-16=-1118/217, 3-4=-2642/399, 1-13=-779/84
BOT CHORD	12-18=-13/494, 11-18=-13/494, 11-19=-13/494, 10-19=-13/494, 9-10=-148/1103, 8-9=-281/2076
WEBS	3-9=-232/1537, 4-9=-1077/211, 4-8=-1946/252, 1-12=0/559, 2-10=-159/837, 3-10=-554/240

NOTES

1) Unbalanced roof live loads have been considered for this design.
2) Wind: ASCE 7-10; Vult=130mph (3-second gust) Vasd=103mph; TCDL=6.0psf; BCDL=6.0psf; h=35ft; Cat. II; Exp B; Enclosed; MWFRS (envelope) exterior zone and C-C Exterior (2) 0-1-12 to 3-1-12, Interior (1) 3-1-12 to 4-6-0, Exterior (2) 4-6-0 to 10-6-0, Interior (1) 10-6-0 to 19-7-0, Exterior (2) 19-7-0 to 22-7-0 zone; cantilever left and right exposed ; end vertical left exposed;C-C for members and forces & MWFRS for reactions shown; Lumber DOL=1.60 plate grip DOL=1.60
3) Provide adequate drainage to prevent water ponding.
4) This truss has been designed for a 10.0 psf bottom chord live load nonconcurrent with any other live loads.
5) * This truss has been designed for a live load of 20.0psf on the bottom chord in all areas where a rectangle 3-06-00 tall by 2-00-00 wide will fit between the bottom chord and any other members, with BCDL = 10.0psf.
6) Provide mechanical connection (by others) of truss to bearing plate capable of withstanding 111 lb uplift at joint 8 and 79 lb uplift at joint 13.
7) This truss is designed in accordance with the 2015 International Residential Code sections R502.11.1 and R802.10.2 and referenced standard ANSI/TPI 1.
8) Graphical purlin representation does not depict the size or the orientation of the purlin along the top and/or bottom chord.

Job	Truss	Truss Type	Qty	Ply	PBS/GUILFORD GEORGIAN RH ROOF
72507638	H3	Truss	1	1	Job Reference (optional)

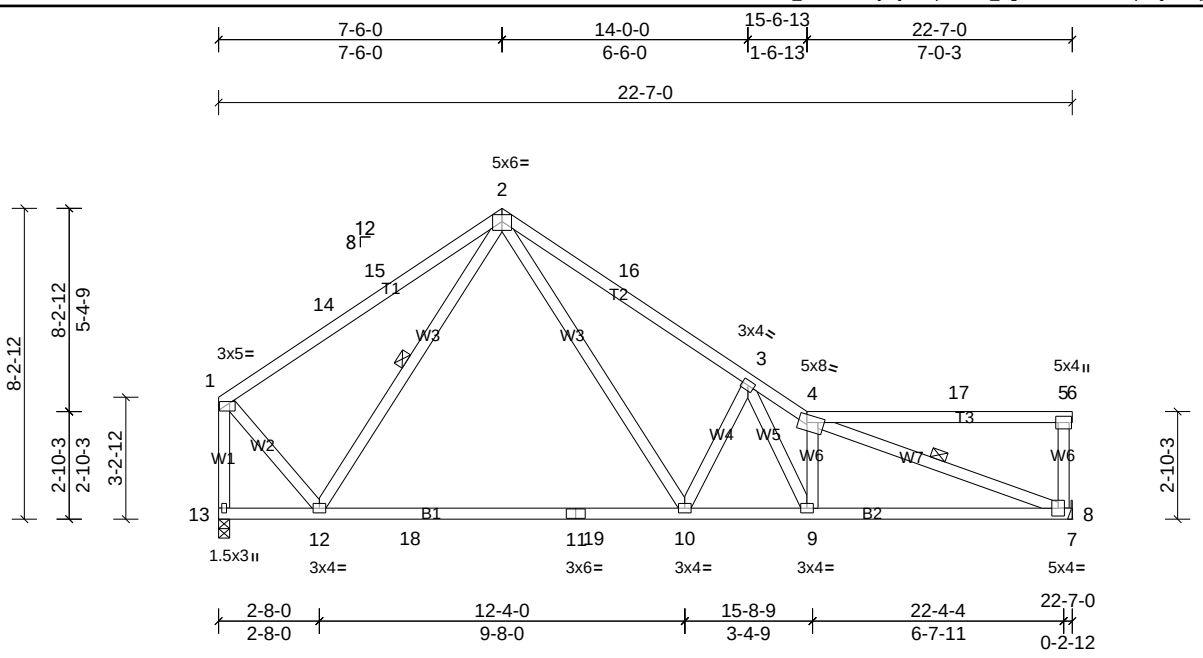

Plate Offsets (X, Y): [1:0-3-4,0-2-8], [4:0-2-12,0-2-8]

Loading	(psf)	Spacing	1-7-3	CSI		DEFL	in	(loc)	l/defl	L/d	PLATES	GRIP
TCLL (roof)	20.0	Plate Grip DOL	1.15	TC	0.73	Vert(LL)	-0.22	10-12	>999	240	MT20	244/190
TCDL	10.0	Lumber DOL	1.15	BC	0.74	Vert(CT)	-0.40	10-12	>673	180		
BCLL	0.0 *	Rep Stress Incr	YES	WB	0.41	Horz(CT)	0.03	8	n/a	n/a		
BCDL	10.0	Code	IRC2015/TPI2014	Matrix-MSH							Weight: 136 lb	FT = 20%

LUMBER

TOP CHORD	2x4 SP No.2
BOT CHORD	2x4 SP No.2
WEBS	2x4 SP No.3

BRACING

TOP CHORD	Structural wood sheathing directly applied or 4-2-2 oc purlins, except end verticals, and 2-0-0 oc purlins (6-0-0 max.): 4-6.
BOT CHORD	Rigid ceiling directly applied or 10-0-0 oc bracing.
WEBS	1 Row at midpt 4-8, 2-12

REACTIONS (lb/size) 8=718/ Mechanical, (min. 0-1-8), 13=710/0-3-8, (min. 0-1-8)
Max Horiz 13=-173 (LC 8)
Max Uplift 8=-115 (LC 11), 13=-75 (LC 11)

FORCES (lb) - Max. Comp./Max. Ten. - All forces 250 (lb) or less except when shown.

TOP CHORD	1-14=-528/112, 14-15=-447/116, 2-15=-432/135, 2-16=-1012/232, 3-16=-1102/216, 3-4=-1614/235, 1-13=-770/82
BOT CHORD	12-18=-45/485, 11-18=-45/485, 11-19=-45/485, 10-19=-45/485, 9-10=-167/1084, 8-9=-192/1334
WEBS	3-9=-99/651, 4-9=-550/129, 4-8=-1325/186, 1-12=0/548, 2-10=-153/793, 3-10=-568/222

NOTES

1) Unbalanced roof live loads have been considered for this design.
2) Wind: ASCE 7-10; Vult=130mph (3-second gust) Vasd=103mph; TCDL=6.0psf; BCDL=6.0psf; h=35ft; Cat. II; Exp B; Enclosed; MWFRS (envelope) exterior zone and C-C Exterior (2) 0-1-12 to 3-1-12, Interior (1) 3-1-12 to 4-6-0, Exterior (2) 4-6-0 to 10-6-0, Interior (1) 10-6-0 to 19-7-0, Exterior (2) 19-7-0 to 22-7-0 zone; cantilever left and right exposed ; end vertical left exposed;C-C for members and forces & MWFRS for reactions shown; Lumber DOL=1.60 plate grip DOL=1.60
3) Provide adequate drainage to prevent water ponding.
4) This truss has been designed for a 10.0 psf bottom chord live load nonconcurrent with any other live loads.
5) * This truss has been designed for a live load of 20.0psf on the bottom chord in all areas where a rectangle 3-06-00 tall by 2-00-00 wide will fit between the bottom chord and any other members, with BCDL = 10.0psf.
6) Provide mechanical connection (by others) of truss to bearing plate capable of withstanding 115 lb uplift at joint 8 and 75 lb uplift at joint 13.
7) This truss is designed in accordance with the 2015 International Residential Code sections R502.11.1 and R802.10.2 and referenced standard ANSI/TPI 1.
8) Graphical purlin representation does not depict the size or the orientation of the purlin along the top and/or bottom chord.

Job	Truss	Truss Type	Qty	Ply	PBS/GUILFORD GEORGIAN RH ROOF
72507638	H4L	Truss	2	**2**	Job Reference (optional)

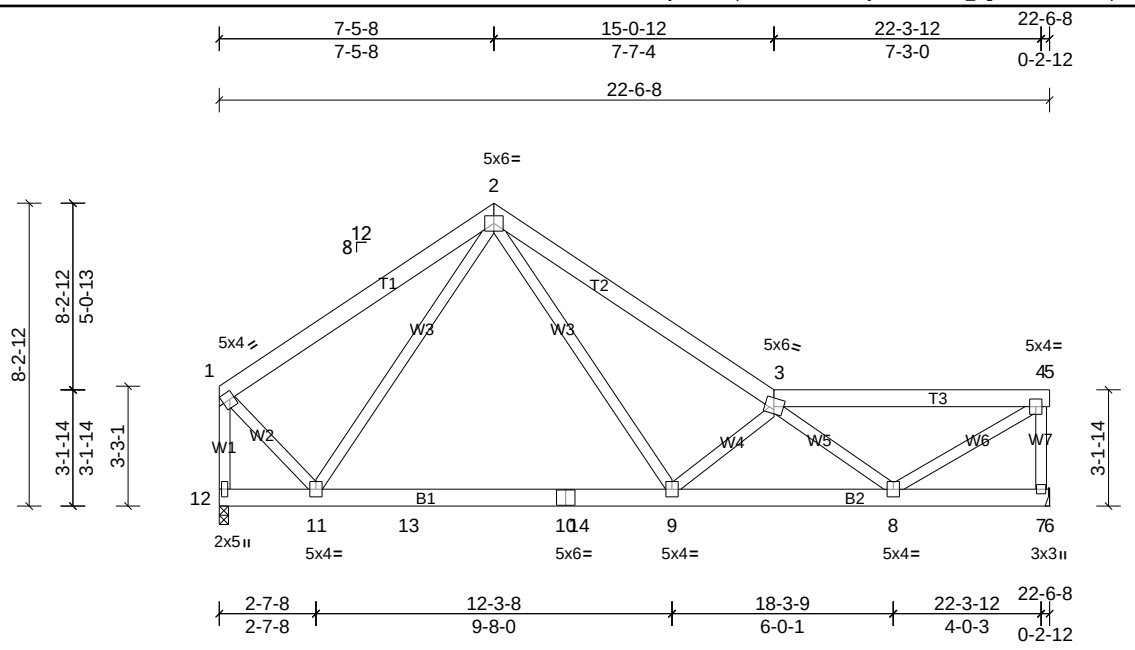

Plate Offsets (X, Y): [1:Edge,0-2-8], [3:0-3-0,0-2-12]

Loading	(psf)	**Spacing**	4-0-0	**CSI**		**DEFL**	in	(loc)	l/defl	L/d	**PLATES**	**GRIP**
TCLL (roof)	20.0	Plate Grip DOL	1.15	TC	0.45	Vert(LL)	-0.09	9-11	>999	240	MT20	244/190
TCDL	10.0	Lumber DOL	1.15	BC	0.49	Vert(CT)	-0.16	9-11	>999	180		
BCLL	0.0 *	Rep Stress Incr	NO	WB	0.48	Horz(CT)	0.02	7	n/a	n/a		
BCDL	10.0	Code	IRC2015/TPI2014	Matrix-MSH							Weight: 339 lb	FT = 20%

LUMBER

TOP CHORD	2x6 SP No.2
BOT CHORD	2x6 SP No.2
WEBS	2x4 SP No.3

BRACING

TOP CHORD	2-0-0 oc purlins (6-0-0 max.), except end verticals (Switched from sheeted: Spacing > 2-0-0).
BOT CHORD	Rigid ceiling directly applied or 10-0-0 oc bracing.

REACTIONS (lb/size) 7=1792/ Mechanical, (min. 0-1-8), 12=1773/0-3-0, (min. 0-1-8)
Max Horiz 12=-415 (LC 6)
Max Uplift 7=-291 (LC 9), 12=-185 (LC 9)

FORCES (lb) - Max. Comp./Max. Ten. - All forces 250 (lb) or less except when shown.
TOP CHORD 1-2=-1311/241, 2-3=-2761/441, 3-4=-1936/227, 1-12=-1907/152
BOT CHORD 11-12=-342/382, 11-13=-103/1222, 10-13=-103/1222, 10-14=-103/1222, 9-14=-103/1222, 8-9=-544/3304
WEBS 4-7=-1698/333, 4-8=-273/2333, 1-11=0/1374, 2-11=-610/223, 2-9=-238/1833, 3-9=-1686/590, 3-8=-1781/412

NOTES

1) 2-ply truss to be connected together with 10d (0.131"x3") nails as follows:
Top chords connected as follows: 2x6 - 2 rows staggered at 0-9-0 oc, 2x4 - 1 row at 0-9-0 oc.
Bottom chords connected as follows: 2x6 - 2 rows staggered at 0-9-0 oc.
Web connected as follows: 2x4 - 1 row at 0-9-0 oc.
2) All loads are considered equally applied to all plies, except if noted as front (F) or back (B) face in the LOAD CASE(S) section. Ply to ply connections have been provided to distribute only loads noted as (F) or (B), unless otherwise indicated.
3) Unbalanced roof live loads have been considered for this design.
4) Wind: ASCE 7-10; Vult=130mph (3-second gust) Vasd=103mph; TCDL=6.0psf; BCDL=6.0psf; h=35ft; Cat. II; Exp B; Enclosed; MWFRS (envelope) exterior zone; cantilever left and right exposed ; end vertical left exposed; Lumber DOL=1.60 plate grip DOL=1.60
5) Provide adequate drainage to prevent water ponding.
6) This truss has been designed for a 10.0 psf bottom chord live load nonconcurrent with any other live loads.
7) * This truss has been designed for a live load of 20.0psf on the bottom chord in all areas where a rectangle 3-06-00 tall by 2-00-00 wide will fit between the bottom chord and any other members, with BCDL = 10.0psf.
8) Provide mechanical connection (by others) of truss to bearing plate capable of withstanding 185 lb uplift at joint 12 and 291 lb uplift at joint 7.
9) This truss is designed in accordance with the 2015 International Residential Code sections R502.11.1 and R802.10.2 and referenced standard ANSI/TPI 1.
10) Graphical purlin representation does not depict the size or the orientation of the purlin along the top and/or bottom chord.

Job	Truss	Truss Type	Qty	Ply	PBS/GUILFORD GEORGIAN RH ROOF
72507638	K1	Truss	2	1	Job Reference (optional)

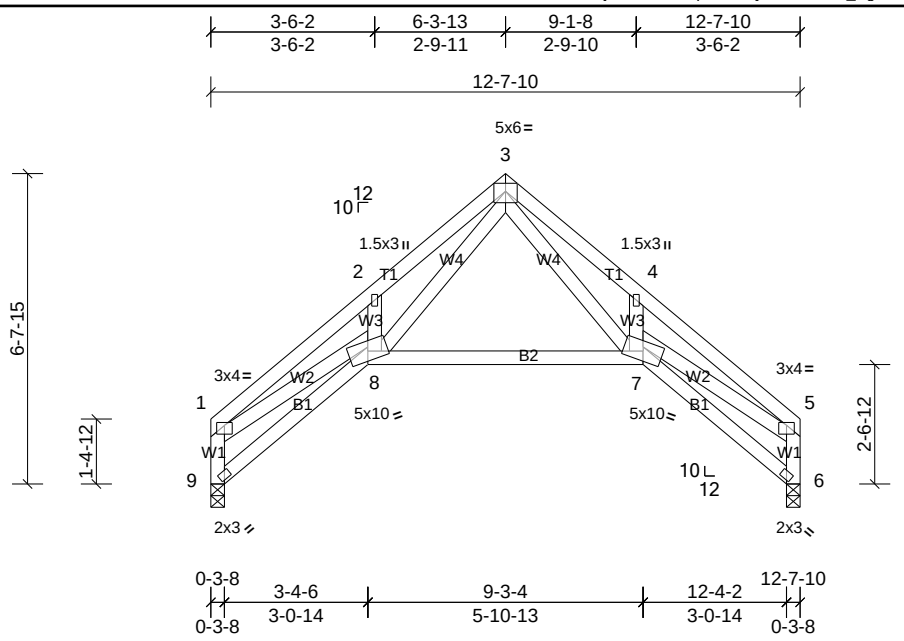

Plate Offsets (X, Y): [1:0-2-0,0-2-4], [4:0-0-0,Edge], [5:0-2-0,0-2-4]

Loading	(psf)	Spacing	2-0-0	CSI		DEFL	in	(loc)	l/defl	L/d	PLATES	GRIP
TCLL (roof)	20.0	Plate Grip DOL	1.15	TC	0.19	Vert(LL)	-0.07	7-8	>999	240	MT20	244/190
TCDL	10.0	Lumber DOL	1.15	BC	0.39	Vert(CT)	-0.17	7-8	>887	180		
BCLL	0.0 *	Rep Stress Incr	YES	WB	0.39	Horz(CT)	0.15	6	n/a	n/a		
BCDL	10.0	Code	IRC2015/TPI2014	Matrix-MSH							Weight: 78 lb	FT = 20%

LUMBER

TOP CHORD	2x4 SP No.2
BOT CHORD	2x4 SP No.2
WEBS	2x4 SP No.3

BRACING

TOP CHORD	Structural wood sheathing directly applied or 4-11-5 oc purlins, except end verticals.
BOT CHORD	Rigid ceiling directly applied or 10-0-0 oc bracing.

REACTIONS (lb/size) 6=494/0-3-8, (min. 0-1-8), 9=494/0-3-8, (min. 0-1-8)
Max Horiz 9=181 (LC 7)
Max Uplift 6=-49 (LC 11), 9=-49 (LC 10)

FORCES (lb) - Max. Comp./Max. Ten. - All forces 250 (lb) or less except when shown.

TOP CHORD	1-9=-541/122, 1-2=-1334/178, 2-3=-1365/351, 3-4=-1234/263, 4-5=-1248/92, 5-6=-497/107
BOT CHORD	8-9=-232/273, 7-8=-52/449
WEBS	1-8=-69/981, 3-8=-300/1043, 3-7=-208/852, 5-7=0/934

NOTES

1) Unbalanced roof live loads have been considered for this design.
2) Wind: ASCE 7-10; Vult=130mph (3-second gust) Vasd=103mph; TCDL=6.0psf; BCDL=6.0psf; h=35ft; Cat. II; Exp B; Enclosed; MWFRS (envelope) exterior zone and C-C Exterior (2) zone; cantilever left and right exposed ; end vertical left and right exposed;C-C for members and forces & MWFRS for reactions shown; Lumber DOL=1.60 plate grip DOL=1.60
3) This truss has been designed for a 10.0 psf bottom chord live load nonconcurrent with any other live loads.
4) * This truss has been designed for a live load of 20.0psf on the bottom chord in all areas where a rectangle 3-06-00 tall by 2-00-00 wide will fit between the bottom chord and any other members.
5) Bearing at joint(s) 9, 6 considers parallel to grain value using ANSI/TPI 1 angle to grain formula. Building designer should verify capacity of bearing surface.
6) Provide mechanical connection (by others) of truss to bearing plate capable of withstanding 49 lb uplift at joint 9 and 49 lb uplift at joint 6.
7) This truss is designed in accordance with the 2015 International Residential Code sections R502.11.1 and R802.10.2 and referenced standard ANSI/TPI 1.

Job	Truss	Truss Type	Qty	Ply	PBS/GUILFORD GEORGIAN RH ROOF
72507638	K1G	Truss	1	1	Job Reference (optional)

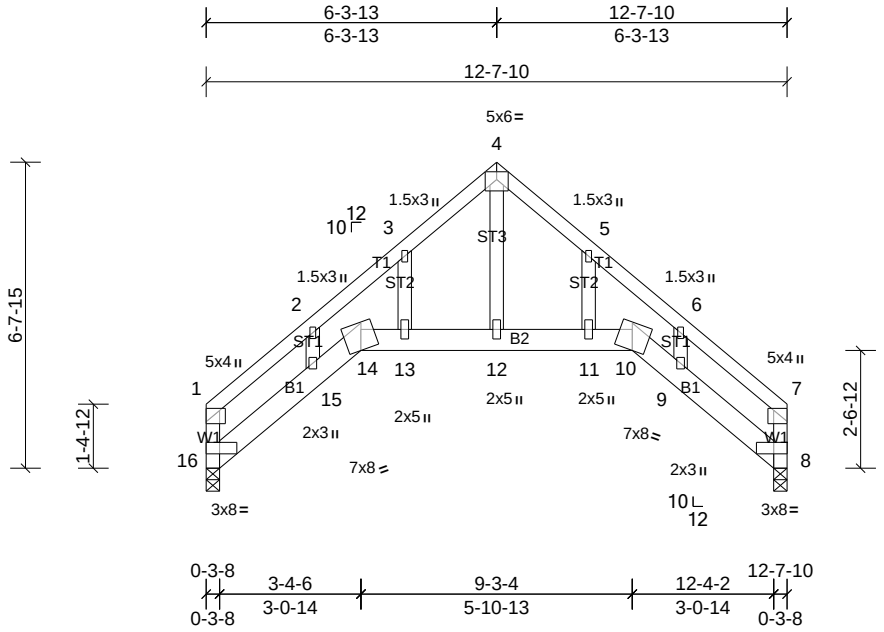

Plate Offsets (X, Y): [8:0-3-8,Edge], [9:0-0-0,Edge], [10:0-4-0,0-2-9], [14:0-4-0,0-2-9], [16:0-3-8,Edge]

Loading	(psf)	Spacing	2-0-0	CSI		DEFL	in	(loc)	l/defl	L/d	PLATES	GRIP
TCLL (roof)	20.0	Plate Grip DOL	1.15	TC	0.79	Vert(LL)	-0.13	12-13	>999	240	MT20	244/190
TCDL	10.0	Lumber DOL	1.15	BC	0.54	Vert(CT)	-0.25	12-13	>593	180		
BCLL	0.0 *	Rep Stress Incr	YES	WB	0.24	Horz(CT)	0.39	8	n/a	n/a		
BCDL	10.0	Code	IRC2015/TPI2014	Matrix-MR							Weight: 76 lb	FT = 20%

LUMBER

TOP CHORD	2x4 SP No.2
BOT CHORD	2x6 SP No.2
WEBS	2x4 SP No.2
OTHERS	2x4 SP No.3

BRACING

TOP CHORD	Structural wood sheathing directly applied or 5-10-11 oc purlins, except end verticals.
BOT CHORD	Rigid ceiling directly applied or 10-0-0 oc bracing.

REACTIONS (lb/size) 8=494/0-3-8, (min. 0-1-8), 16=494/0-3-8, (min. 0-1-8)
Max Horiz 16=176 (LC 9)
Max Uplift 8=-49 (LC 11), 16=-49 (LC 10)

FORCES (lb) - Max. Comp./Max. Ten. - All forces 250 (lb) or less except when shown.

TOP CHORD	1-16=-601/26, 1-2=-757/8, 2-3=-656/100, 3-4=-631/186, 4-5=-642/186, 5-6=-686/126, 6-7=-806/78, 7-8=-619/57
BOT CHORD	15-16=-58/528, 14-15=-79/547, 13-14=-53/542, 12-13=-53/542, 11-12=-53/542, 10-11=-53/542, 9-10=-63/535, 8-9=-98/557
WEBS	4-12=-164/586

NOTES

1) Unbalanced roof live loads have been considered for this design.
2) Wind: ASCE 7-10; Vult=130mph (3-second gust) Vasd=103mph; TCDL=6.0psf; BCDL=6.0psf; h=35ft; Cat. II; Exp B; Enclosed; MWFRS (envelope) exterior zone and C-C Exterior (2) zone; cantilever left and right exposed ; end vertical left and right exposed;C-C for members and forces & MWFRS for reactions shown; Lumber DOL=1.60 plate grip DOL=1.60
3) Truss designed for wind loads in the plane of the truss only.
4) Truss to be fully sheathed from one face or securely braced against lateral movement (i.e. diagonal web).
5) Gable studs spaced at 2-0-0 oc.
6) This truss has been designed for a 10.0 psf bottom chord live load nonconcurrent with any other live loads.
7) * This truss has been designed for a live load of 20.0psf on the bottom chord in all areas where a rectangle 3-06-00 tall by 2-00-00 wide will fit between the bottom chord and any other members.
8) Bearing at joint(s) 16, 8 considers parallel to grain value using ANSI/TPI 1 angle to grain formula. Building designer should verify capacity of bearing surface.
9) Provide mechanical connection (by others) of truss to bearing plate capable of withstanding 49 lb uplift at joint 16 and 49 lb uplift at joint 8.
10) This truss is designed in accordance with the 2015 International Residential Code sections R502.11.1 and R802.10.2 and referenced standard ANSI/TPI 1.

NORTH CAROLINA PROFESSIONAL SEAL 054919 ENGINEER HUNTER B. DOSS
3/24/2025

Job	Truss	Truss Type	Qty	Ply	PBS/GUILFORD GEORGIAN RH ROOF
72507638	K1L	Truss	1	**2**	Job Reference (optional)

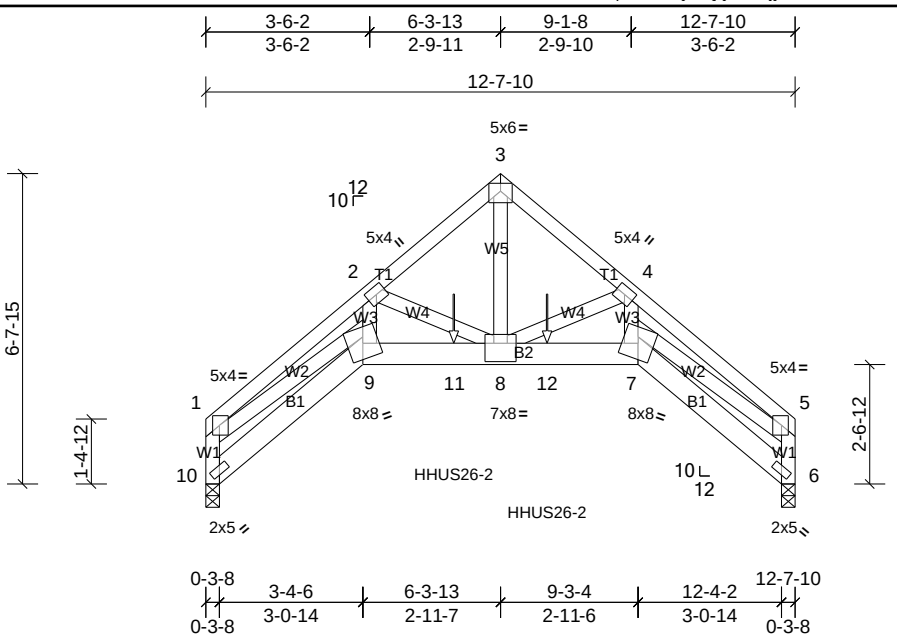

Plate Offsets (X, Y): [1:0-1-12,0-2-8], [4:0-0-0,0-0-0], [5:0-1-12,0-2-8], [8:0-4-0,0-4-12]

Loading	(psf)	**Spacing**	2-0-0	**CSI**		**DEFL**	in	(loc)	l/defl	L/d	**PLATES**	**GRIP**
TCLL (roof)	20.0	Plate Grip DOL	1.15	TC	0.48	Vert(LL)	-0.11	8-9	>999	240	MT20	244/190
TCDL	10.0	Lumber DOL	1.15	BC	0.95	Vert(CT)	-0.21	8-9	>695	180		
BCLL	0.0 *	Rep Stress Incr	NO	WB	0.67	Horz(CT)	0.32	6	n/a	n/a		
BCDL	10.0	Code	IRC2015/TPI2014	Matrix-MSH							Weight: 182 lb	FT = 20%

LUMBER

TOP CHORD	2x4 SP No.2
BOT CHORD	2x6 SP No.2
WEBS	2x4 SP No.3 *Except* W2,W5:2x4 SP No.2

BRACING

TOP CHORD	Structural wood sheathing directly applied or 4-4-1 oc purlins, except end verticals.
BOT CHORD	Rigid ceiling directly applied or 10-0-0 oc bracing.

REACTIONS (lb/size) 6=2245/0-3-8, (min. 0-1-8), 10=2246/0-3-8, (min. 0-1-8)
Max Horiz 10=176 (LC 7)
Max Uplift 6=-364 (LC 9), 10=-364 (LC 8)

FORCES (lb) - Max. Comp./Max. Ten. - All forces 250 (lb) or less except when shown.

TOP CHORD	1-10=-2227/441, 1-2=-6837/1204, 2-3=-4122/728, 3-4=-4122/748, 4-5=-6825/1086, 5-6=-2226/401
BOT CHORD	9-10=-249/342, 9-11=-909/4900, 8-11=-909/4900, 8-12=-737/4892, 7-12=-737/4892
WEBS	1-9=-895/5435, 2-9=-474/2475, 4-7=-340/2465, 5-7=-815/5424, 3-8=-871/4950, 4-8=-1913/408, 2-8=-1921/467

NOTES

1) 2-ply truss to be connected together with 10d (0.131"x3") nails as follows:
Top chords connected as follows: 2x4 - 1 row at 0-9-0 oc.
Bottom chords connected as follows: 2x6 - 3 rows staggered at 0-8-0 oc.
Web connected as follows: 2x4 - 1 row at 0-9-0 oc.
2) All loads are considered equally applied to all plies, except if noted as front (F) or back (B) face in the LOAD CASE(S) section. Ply to ply connections have been provided to distribute only loads noted as (F) or (B), unless otherwise indicated.
3) Unbalanced roof live loads have been considered for this design.
4) Wind: ASCE 7-10; Vult=130mph (3-second gust) Vasd=103mph; TCDL=6.0psf; BCDL=6.0psf; h=35ft; Cat. II; Exp B; Enclosed; MWFRS (envelope) exterior zone; cantilever left and right exposed ; end vertical left and right exposed; Lumber DOL=1.60 plate grip DOL=1.60
5) This truss has been designed for a 10.0 psf bottom chord live load nonconcurrent with any other live loads.
6) * This truss has been designed for a live load of 20.0psf on the bottom chord in all areas where a rectangle 3-06-00 tall by 2-00-00 wide will fit between the bottom chord and any other members.
7) Bearing at joint(s) 10, 6 considers parallel to grain value using ANSI/TPI 1 angle to grain formula. Building designer should verify capacity of bearing surface.
8) Provide mechanical connection (by others) of truss to bearing plate capable of withstanding 364 lb uplift at joint 10 and 364 lb uplift at joint 6.
9) This truss is designed in accordance with the 2015 International Residential Code sections R502.11.1 and R802.10.2 and referenced standard ANSI/TPI 1.
10) Use Simpson Strong-Tie HHUS26-2 (14-10d Girder, 4-10d Truss) or equivalent spaced at 2-0-0 oc max. starting at 5-3-13 from the left end to 7-3-13 to connect truss(es) to back face of bottom chord.
11) Fill all nail holes where hanger is in contact with lumber.

LOAD CASE(S) Standard

1) Dead + Roof Live (balanced): Lumber Increase=1.15, Plate Increase=1.15
Uniform Loads (lb/ft)
Vert: 1-3=-60, 3-5=-60, 9-10=-20, 7-9=-20, 6-7=-20
Concentrated Loads (lb)
Vert: 11=-1752, 12=-1752

NORTH CAROLINA PROFESSIONAL SEAL 054919 ENGINEER HUNTER B. DOSS
3/24/2025

Job	Truss	Truss Type	Qty	Ply	PBS/GUILFORD GEORGIAN RH ROOF
72507638	L1	Truss	2	1	Job Reference (optional)

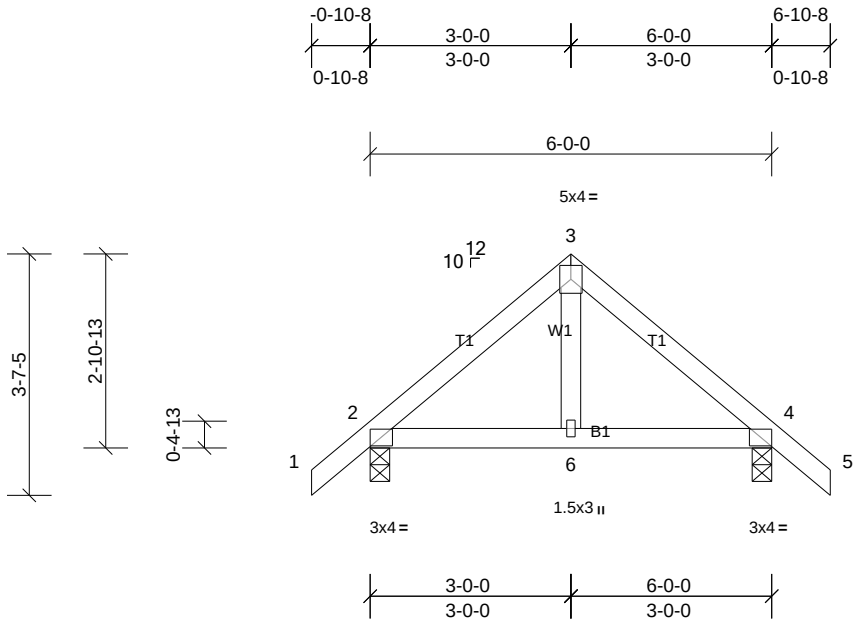

Plate Offsets (X, Y): [2:0-2-1,0-1-8], [4:0-2-1,0-1-8]

Loading	(psf)	Spacing	2-0-0	CSI		DEFL	in	(loc)	l/defl	L/d	PLATES	GRIP
TCLL (roof)	20.0	Plate Grip DOL	1.15	TC	0.09	Vert(LL)	0.00	6-9	>999	240	MT20	244/190
TCDL	10.0	Lumber DOL	1.15	BC	0.11	Vert(CT)	-0.01	6-9	>999	180		
BCLL	0.0 *	Rep Stress Incr	YES	WB	0.05	Horz(CT)	0.00	4	n/a	n/a		
BCDL	10.0	Code	IRC2015/TPI2014	Matrix-MSH							Weight: 28 lb	FT = 20%

LUMBER

TOP CHORD	2x4 SP No.2
BOT CHORD	2x4 SP No.2
WEBS	2x4 SP No.3

BRACING

TOP CHORD	Structural wood sheathing directly applied or 6-0-0 oc purlins.
BOT CHORD	Rigid ceiling directly applied or 10-0-0 oc bracing.

REACTIONS (lb/size) 2=293/0-3-8, (min. 0-1-8), 4=292/0-3-8, (min. 0-1-8)
Max Horiz 2=83 (LC 9)
Max Uplift 2=-48 (LC 10), 4=-48 (LC 11)

FORCES (lb) - Max. Comp./Max. Ten. - All forces 250 (lb) or less except when shown.

NOTES

1) Unbalanced roof live loads have been considered for this design.
2) Wind: ASCE 7-10; Vult=130mph (3-second gust) Vasd=103mph; TCDL=6.0psf; BCDL=6.0psf; h=35ft; Cat. II; Exp B; Enclosed; MWFRS (envelope) exterior zone and C-C Exterior (2) zone; cantilever left and right exposed ; end vertical left and right exposed;C-C for members and forces & MWFRS for reactions shown; Lumber DOL=1.60 plate grip DOL=1.60
3) This truss has been designed for a 10.0 psf bottom chord live load nonconcurrent with any other live loads.
4) * This truss has been designed for a live load of 20.0psf on the bottom chord in all areas where a rectangle 3-06-00 tall by 2-00-00 wide will fit between the bottom chord and any other members.
5) Provide mechanical connection (by others) of truss to bearing plate capable of withstanding 48 lb uplift at joint 2 and 48 lb uplift at joint 4.
6) This truss is designed in accordance with the 2015 International Residential Code sections R502.11.1 and R802.10.2 and referenced standard ANSI/TPI 1.

Job	Truss	Truss Type	Qty	Ply	PBS/GUILFORD GEORGIAN RH ROOF
72507638	L1G	Truss	1	1	Job Reference (optional)

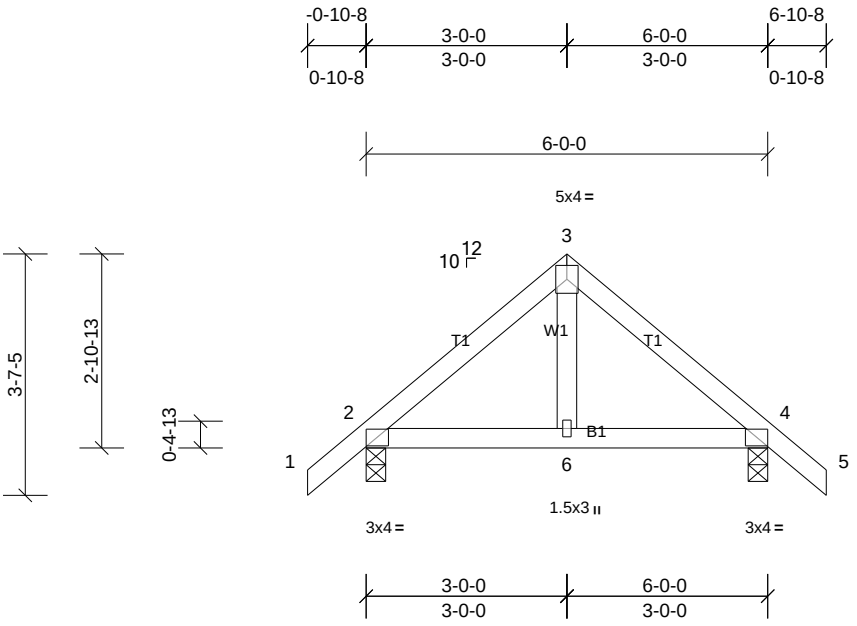

Plate Offsets (X, Y): [2:0-2-1,0-1-8], [4:0-2-1,0-1-8]

Loading	(psf)	Spacing	2-0-0	CSI		DEFL	in	(loc)	l/defl	L/d	PLATES	GRIP
TCLL (roof)	20.0	Plate Grip DOL	1.15	TC	0.09	Vert(LL)	0.00	6-9	>999	240	MT20	244/190
TCDL	10.0	Lumber DOL	1.15	BC	0.11	Vert(CT)	-0.01	6-9	>999	180		
BCLL	0.0 *	Rep Stress Incr	YES	WB	0.05	Horz(CT)	0.00	4	n/a	n/a		
BCDL	10.0	Code	IRC2015/TPI2014	Matrix-MSH							Weight: 28 lb	FT = 20%

LUMBER

TOP CHORD	2x4 SP No.2
BOT CHORD	2x4 SP No.2
WEBS	2x4 SP No.3

BRACING

TOP CHORD	Structural wood sheathing directly applied or 6-0-0 oc purlins.
BOT CHORD	Rigid ceiling directly applied or 10-0-0 oc bracing.

REACTIONS (lb/size) 2=293/0-3-8, (min. 0-1-8), 4=292/0-3-8, (min. 0-1-8)
Max Horiz 2=83 (LC 9)
Max Uplift 2=-48 (LC 10), 4=-48 (LC 11)

FORCES (lb) - Max. Comp./Max. Ten. - All forces 250 (lb) or less except when shown.

NOTES

1) Unbalanced roof live loads have been considered for this design.
2) Wind: ASCE 7-10; Vult=130mph (3-second gust) Vasd=103mph; TCDL=6.0psf; BCDL=6.0psf; h=35ft; Cat. II; Exp B; Enclosed; MWFRS (envelope) exterior zone and C-C Exterior (2) zone; cantilever left and right exposed ; end vertical left and right exposed;C-C for members and forces & MWFRS for reactions shown; Lumber DOL=1.60 plate grip DOL=1.60
3) This truss has been designed for a 10.0 psf bottom chord live load nonconcurrent with any other live loads.
4) * This truss has been designed for a live load of 20.0psf on the bottom chord in all areas where a rectangle 3-06-00 tall by 2-00-00 wide will fit between the bottom chord and any other members.
5) Provide mechanical connection (by others) of truss to bearing plate capable of withstanding 48 lb uplift at joint 2 and 48 lb uplift at joint 4.
6) This truss is designed in accordance with the 2015 International Residential Code sections R502.11.1 and R802.10.2 and referenced standard ANSI/TPI 1.

Job	Truss	Truss Type	Qty	Ply	PBS/GUILFORD GEORGIAN RH ROOF
72507638	L1L	Truss	1	**2**	Job Reference (optional)

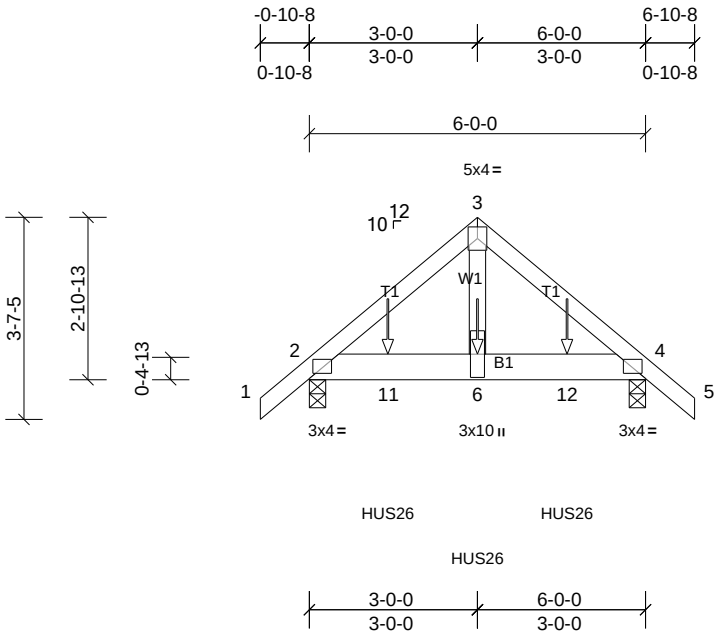

Plate Offsets (X, Y): [2:0-1-10,0-1-8], [4:0-1-10,0-1-8]

Loading	(psf)	**Spacing**	2-0-0	**CSI**		**DEFL**	in	(loc)	l/defl	L/d	**PLATES**	**GRIP**
TCLL (roof)	20.0	Plate Grip DOL	1.15	TC	0.10	Vert(LL)	-0.01	6-8	>999	240	MT20	244/190
TCDL	10.0	Lumber DOL	1.15	BC	0.32	Vert(CT)	-0.01	6-8	>999	180		
BCLL	0.0 *	Rep Stress Incr	NO	WB	0.33	Horz(CT)	0.00	4	n/a	n/a		
BCDL	10.0	Code	IRC2015/TPI2014	Matrix-MSH							Weight: 66 lb	FT = 20%

LUMBER

TOP CHORD	2x4 SP No.2
BOT CHORD	2x6 SP No.2
WEBS	2x4 SP No.3

BRACING

TOP CHORD	Structural wood sheathing directly applied or 6-0-0 oc purlins.
BOT CHORD	Rigid ceiling directly applied or 10-0-0 oc bracing.

REACTIONS (lb/size) 2=1345/0-3-8, (min. 0-1-8), 4=1345/0-3-8, (min. 0-1-8)
Max Horiz 2=-83 (LC 6)
Max Uplift 2=-232 (LC 8), 4=-232 (LC 9)

FORCES (lb) - Max. Comp./Max. Ten. - All forces 250 (lb) or less except when shown.

TOP CHORD	2-3=-1443/255, 3-4=-1413/255
BOT CHORD	2-11=-146/1074, 6-11=-146/1074, 6-12=-146/1074, 4-12=-146/1074
WEBS	3-6=-248/1571

NOTES

1) 2-ply truss to be connected together with 10d (0.131"x3") nails as follows:
Top chords connected as follows: 2x4 - 1 row at 0-9-0 oc.
Bottom chords connected as follows: 2x6 - 2 rows staggered at 0-9-0 oc.
Web connected as follows: 2x4 - 1 row at 0-5-0 oc.
2) All loads are considered equally applied to all plies, except if noted as front (F) or back (B) face in the LOAD CASE(S) section. Ply to ply connections have been provided to distribute only loads noted as (F) or (B), unless otherwise indicated.
3) Unbalanced roof live loads have been considered for this design.
4) Wind: ASCE 7-10; Vult=130mph (3-second gust) Vasd=103mph; TCDL=6.0psf; BCDL=6.0psf; h=35ft; Cat. II; Exp B; Enclosed; MWFRS (envelope) exterior zone; cantilever left and right exposed ; end vertical left and right exposed; Lumber DOL=1.60 plate grip DOL=1.60
5) This truss has been designed for a 10.0 psf bottom chord live load nonconcurrent with any other live loads.
6) * This truss has been designed for a live load of 20.0psf on the bottom chord in all areas where a rectangle 3-06-00 tall by 2-00-00 wide will fit between the bottom chord and any other members.
7) Provide mechanical connection (by others) of truss to bearing plate capable of withstanding 232 lb uplift at joint 2 and 232 lb uplift at joint 4.
8) This truss is designed in accordance with the 2015 International Residential Code sections R502.11.1 and R802.10.2 and referenced standard ANSI/TPI 1.
9) Use Simpson Strong-Tie HUS26 (14-16d Girder, 4-16d Truss) or equivalent spaced at 1-7-3 oc max. starting at 1-4-13 from the left end to 4-7-3 to connect truss(es) to back face of bottom chord.
10) Fill all nail holes where hanger is in contact with lumber.

LOAD CASE(S) Standard

1) Dead + Roof Live (balanced): Lumber Increase=1.15, Plate Increase=1.15
Uniform Loads (lb/ft)
Vert: 1-3=-60, 3-5=-60, 2-4=-20
Concentrated Loads (lb)
Vert: 6=-702, 11=-702, 12=-702

Job	Truss	Truss Type	Qty	Ply	PBS/GUILFORD GEORGIAN RH ROOF
72507638	V1	Truss	2	1	Job Reference (optional)

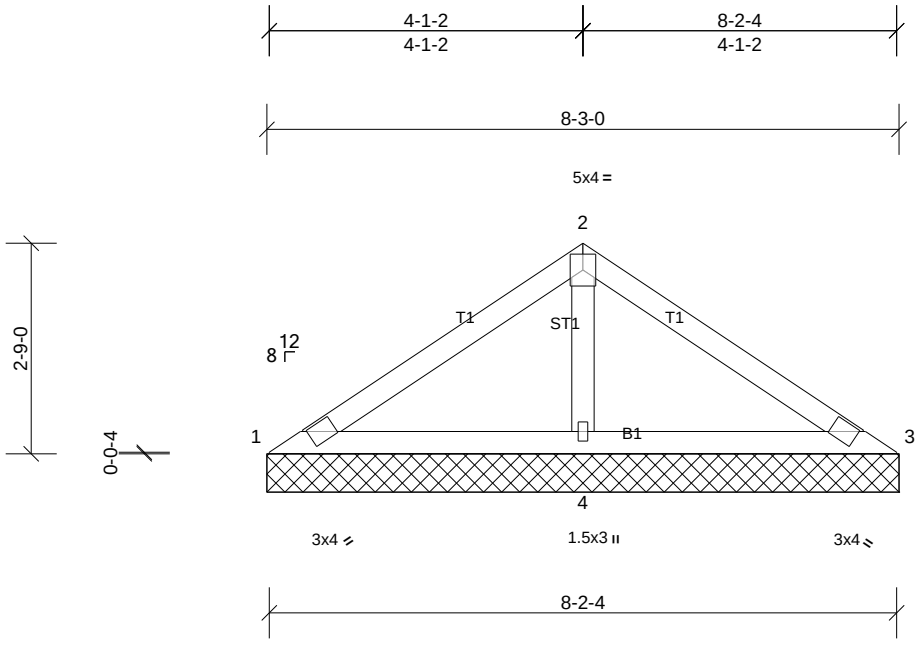

Loading	(psf)	Spacing	2-0-0	CSI		DEFL	in	(loc)	l/defl	L/d	PLATES	GRIP
TCLL (roof)	20.0	Plate Grip DOL	1.15	TC	0.18	Vert(LL)	n/a	-	n/a	999	MT20	244/190
TCDL	10.0	Lumber DOL	1.15	BC	0.18	Vert(TL)	n/a	-	n/a	999		
BCLL	0.0 *	Rep Stress Incr	YES	WB	0.09	Horiz(TL)	0.00	3	n/a	n/a		
BCDL	10.0	Code	IRC2015/TPI2014	Matrix-MSH							Weight: 28 lb	FT = 20%

LUMBER

TOP CHORD	2x4 SP No.2
BOT CHORD	2x4 SP No.2
OTHERS	2x4 SP No.3

BRACING

TOP CHORD	Structural wood sheathing directly applied or 8-3-0 oc purlins.
BOT CHORD	Rigid ceiling directly applied or 6-0-0 oc bracing.

REACTIONS (lb/size) 1=45/8-3-0, (min. 0-1-8), 3=45/8-3-0, (min. 0-1-8), 4=569/8-3-0, (min. 0-1-8)
Max Horiz 1=-67 (LC 6)
Max Uplift 1=-8 (LC 22), 3=-14 (LC 6), 4=-82 (LC 10)
Max Grav 1=75 (LC 21), 3=75 (LC 22), 4=569 (LC 1)

FORCES (lb) - Max. Comp./Max. Ten. - All forces 250 (lb) or less except when shown.
WEBS 2-4=-423/156

NOTES

1) Unbalanced roof live loads have been considered for this design.
2) Wind: ASCE 7-10; Vult=130mph (3-second gust) Vasd=103mph; TCDL=6.0psf; BCDL=6.0psf; h=35ft; Cat. II; Exp B; Enclosed; MWFRS (envelope) exterior zone and C-C Exterior (2) zone; cantilever left and right exposed ; end vertical left and right exposed;C-C for members and forces & MWFRS for reactions shown; Lumber DOL=1.60 plate grip DOL=1.60
3) Truss designed for wind loads in the plane of the truss only.
4) Gable requires continuous bottom chord bearing.
5) Gable studs spaced at 4-0-0 oc.
6) This truss has been designed for a 10.0 psf bottom chord live load nonconcurrent with any other live loads.
7) * This truss has been designed for a live load of 20.0psf on the bottom chord in all areas where a rectangle 3-06-00 tall by 2-00-00 wide will fit between the bottom chord and any other members.
8) Provide mechanical connection (by others) of truss to bearing plate capable of withstanding 8 lb uplift at joint 1, 14 lb uplift at joint 3 and 82 lb uplift at joint 4.
9) Beveled plate or shim required to provide full bearing surface with truss chord at joint(s) 1, 3.
10) This truss is designed in accordance with the 2015 International Residential Code sections R502.11.1 and R802.10.2 and referenced standard ANSI/TPI 1.

NORTH CAROLINA PROFESSIONAL SEAL 054919 ENGINEER HUNTER B. DOSS
3/24/2025

Job	Truss	Truss Type	Qty	Ply	PBS/GUILFORD GEORGIAN RH ROOF
72507638	V2	Truss	2	1	Job Reference (optional)

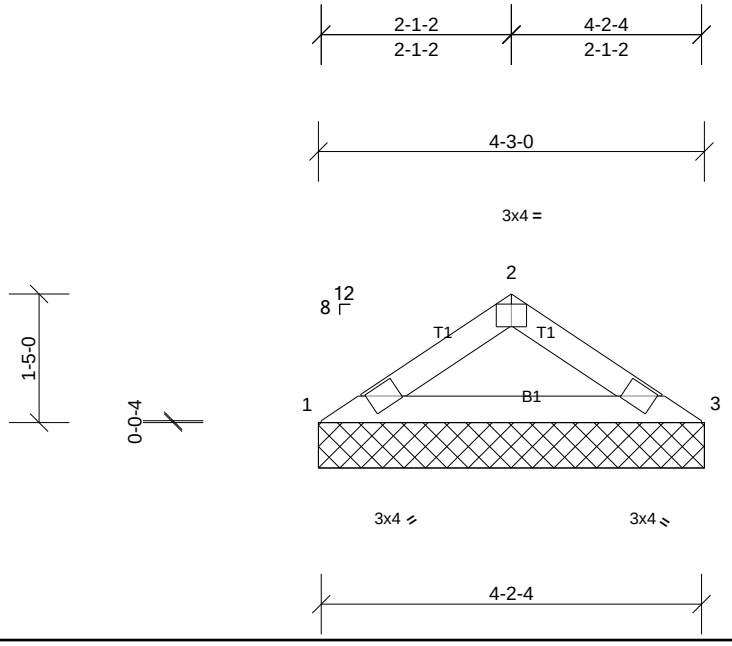

Plate Offsets (X, Y): [2:0-2-0,Edge]

Loading	(psf)	Spacing	2-0-0	CSI		DEFL	in	(loc)	l/defl	L/d	PLATES	GRIP
TCLL (roof)	20.0	Plate Grip DOL	1.15	TC	0.14	Vert(LL)	n/a	-	n/a	999	MT20	244/190
TCDL	10.0	Lumber DOL	1.15	BC	0.11	Vert(TL)	n/a	-	n/a	999		
BCLL	0.0 *	Rep Stress Incr	YES	WB	0.00	Horiz(TL)	0.00	3	n/a	n/a		
BCDL	10.0	Code	IRC2015/TPI2014	Matrix-MP							Weight: 12 lb	FT = 20%

LUMBER
TOP CHORD 2x4 SP No.2
BOT CHORD 2x4 SP No.2

BRACING
TOP CHORD Structural wood sheathing directly applied or 4-2-4 oc purlins.
BOT CHORD Rigid ceiling directly applied or 10-0-0 oc bracing.

REACTIONS (lb/size) 1=170/4-3-0, (min. 0-1-8), 3=170/4-3-0, (min. 0-1-8)
Max Horiz 1=32 (LC 7)
Max Uplift 1=-22 (LC 10), 3=-22 (LC 11)

FORCES (lb) - Max. Comp./Max. Ten. - All forces 250 (lb) or less except when shown.
TOP CHORD 1-2=-261/66

NOTES
1) Unbalanced roof live loads have been considered for this design.
2) Wind: ASCE 7-10; Vult=130mph (3-second gust) Vasd=103mph; TCDL=6.0psf; BCDL=6.0psf; h=35ft; Cat. II; Exp B; Enclosed; MWFRS (envelope) exterior zone and C-C Exterior (2) zone; cantilever left and right exposed ; end vertical left and right exposed;C-C for members and forces & MWFRS for reactions shown; Lumber DOL=1.60 plate grip DOL=1.60
3) Gable requires continuous bottom chord bearing.
4) This truss has been designed for a 10.0 psf bottom chord live load nonconcurrent with any other live loads.
5) * This truss has been designed for a live load of 20.0psf on the bottom chord in all areas where a rectangle 3-06-00 tall by 2-00-00 wide will fit between the bottom chord and any other members.
6) Provide mechanical connection (by others) of truss to bearing plate capable of withstanding 22 lb uplift at joint 1 and 22 lb uplift at joint 3.
7) Beveled plate or shim required to provide full bearing surface with truss chord at joint(s) 1, 3.
8) This truss is designed in accordance with the 2015 International Residential Code sections R502.11.1 and R802.10.2 and referenced standard ANSI/TPI 1.

Job	Truss	Truss Type	Qty	Ply	PBS/GUILFORD GEORGIAN RH ROOF
72507638	V3	Truss	1	1	Job Reference (optional)

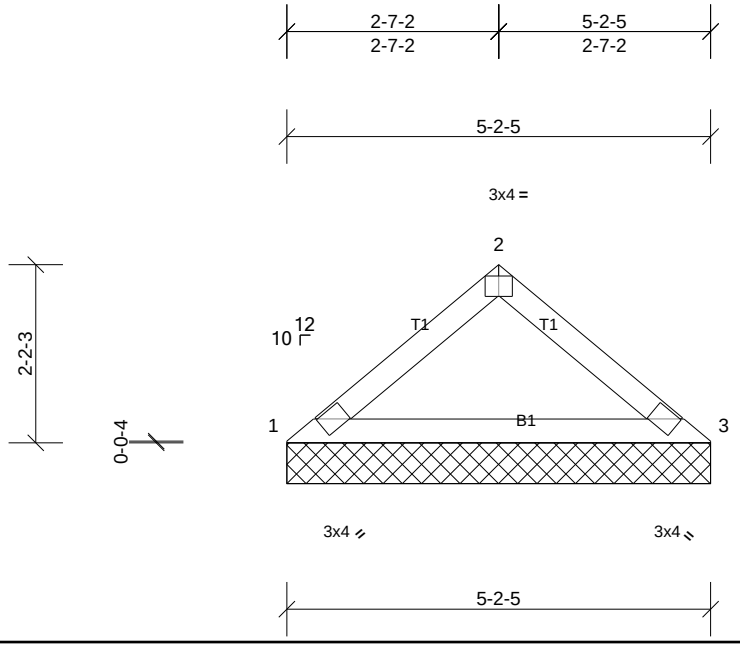

Plate Offsets (X, Y): [2:0-2-0,Edge]

Loading	(psf)	Spacing	2-0-0	CSI		DEFL	in	(loc)	l/defl	L/d	PLATES	GRIP
TCLL (roof)	20.0	Plate Grip DOL	1.15	TC	0.18	Vert(LL)	n/a	-	n/a	999	MT20	244/190
TCDL	10.0	Lumber DOL	1.15	BC	0.15	Vert(TL)	n/a	-	n/a	999		
BCLL	0.0 *	Rep Stress Incr	YES	WB	0.00	Horiz(TL)	0.01	3	n/a	n/a		
BCDL	10.0	Code	IRC2015/TPI2014	Matrix-MSH							Weight: 16 lb	FT = 20%

LUMBER

TOP CHORD	2x4 SP No.2
BOT CHORD	2x4 SP No.2

BRACING

TOP CHORD	Structural wood sheathing directly applied or 5-2-5 oc purlins.
BOT CHORD	Rigid ceiling directly applied or 10-0-0 oc bracing.

REACTIONS (lb/size) 1=208/5-2-5, (min. 0-1-8), 3=208/5-2-5, (min. 0-1-8)
Max Horiz 1=-52 (LC 6)
Max Uplift 1=-25 (LC 10), 3=-25 (LC 11)

FORCES (lb) - Max. Comp./Max. Ten. - All forces 250 (lb) or less except when shown.
TOP CHORD 1-2=-295/69

NOTES

1) Unbalanced roof live loads have been considered for this design.
2) Wind: ASCE 7-10; Vult=130mph (3-second gust) Vasd=103mph; TCDL=6.0psf; BCDL=6.0psf; h=35ft; Cat. II; Exp B; Enclosed; MWFRS (envelope) exterior zone and C-C Exterior (2) zone; cantilever left and right exposed ; end vertical left and right exposed;C-C for members and forces & MWFRS for reactions shown; Lumber DOL=1.60 plate grip DOL=1.60
3) Gable requires continuous bottom chord bearing.
4) This truss has been designed for a 10.0 psf bottom chord live load nonconcurrent with any other live loads.
5) * This truss has been designed for a live load of 20.0psf on the bottom chord in all areas where a rectangle 3-06-00 tall by 2-00-00 wide will fit between the bottom chord and any other members.
6) Provide mechanical connection (by others) of truss to bearing plate capable of withstanding 25 lb uplift at joint 1 and 25 lb uplift at joint 3.
7) This truss is designed in accordance with the 2015 International Residential Code sections R502.11.1 and R802.10.2 and referenced standard ANSI/TPI 1.

NORTH CAROLINA PROFESSIONAL SEAL 054919 ENGINEER HUNTER B. DOSS
3/24/2025

Job	Truss	Truss Type	Qty	Ply	PBS/GUILFORD GEORGIAN RH ROOF
72507638	V4G	Truss	2	1	Job Reference (optional)

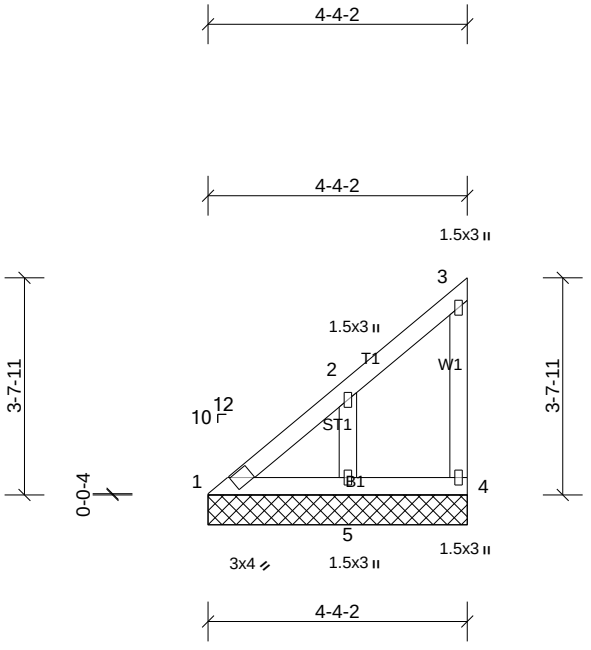

Loading	(psf)	Spacing	1-7-3	CSI		DEFL	in	(loc)	l/defl	L/d	PLATES	GRIP
TCLL (roof)	20.0	Plate Grip DOL	1.15	TC	0.14	Vert(LL)	n/a	-	n/a	999	MT20	244/190
TCDL	10.0	Lumber DOL	1.15	BC	0.04	Vert(TL)	n/a	-	n/a	999		
BCLL	0.0 *	Rep Stress Incr	YES	WB	0.03	Horiz(TL)	n/a	-	n/a	n/a		
BCDL	10.0	Code	IRC2015/TPI2014	Matrix-MP							Weight: 21 lb	FT = 20%

LUMBER

TOP CHORD	2x4 SP No.2
BOT CHORD	2x4 SP No.2
WEBS	2x4 SP No.3
OTHERS	2x4 SP No.3

BRACING

TOP CHORD	Structural wood sheathing directly applied or 4-4-2 oc purlins, except end verticals.
BOT CHORD	Rigid ceiling directly applied or 10-0-0 oc bracing.

REACTIONS (lb/size) 1=60/4-4-2, (min. 0-1-8), 4=40/4-4-2, (min. 0-1-8), 5=168/4-4-2, (min. 0-1-8)
Max Horiz 1=103 (LC 7)
Max Uplift 1=-7 (LC 6), 4=-27 (LC 7), 5=-81 (LC 10)
Max Grav 1=81 (LC 18), 4=53 (LC 17), 5=182 (LC 17)

FORCES (lb) - Max. Comp./Max. Ten. - All forces 250 (lb) or less except when shown.

NOTES

1) Unbalanced roof live loads have been considered for this design.
2) Wind: ASCE 7-10; Vult=130mph (3-second gust) Vasd=103mph; TCDL=6.0psf; BCDL=6.0psf; h=35ft; Cat. II; Exp B; Enclosed; MWFRS (envelope) exterior zone and C-C Exterior (2) zone; cantilever left and right exposed ; end vertical left and right exposed;C-C for members and forces & MWFRS for reactions shown; Lumber DOL=1.60 plate grip DOL=1.60
3) Gable requires continuous bottom chord bearing.
4) This truss has been designed for a 10.0 psf bottom chord live load nonconcurrent with any other live loads.
5) * This truss has been designed for a live load of 20.0psf on the bottom chord in all areas where a rectangle 3-06-00 tall by 2-00-00 wide will fit between the bottom chord and any other members.
6) Provide mechanical connection (by others) of truss to bearing plate capable of withstanding 27 lb uplift at joint 4, 7 lb uplift at joint 1 and 81 lb uplift at joint 5.
7) This truss is designed in accordance with the 2015 International Residential Code sections R502.11.1 and R802.10.2 and referenced standard ANSI/TPI 1.

NORTH CAROLINA PROFESSIONAL SEAL 054919 3/24/2025 ENGINEER HUNTER B. DOSS

Job	Truss	Truss Type	Qty	Ply	PBS/GUILFORD GEORGIAN RH ROOF
72507638	V5	Truss	2	1	Job Reference (optional)

ID:YHjrya?haKRZ6cvIv1kRc?yHd4V-ky8VcaiQOu1fD1vJXZAX836GO2A4dLfEVjebfSzXkDb

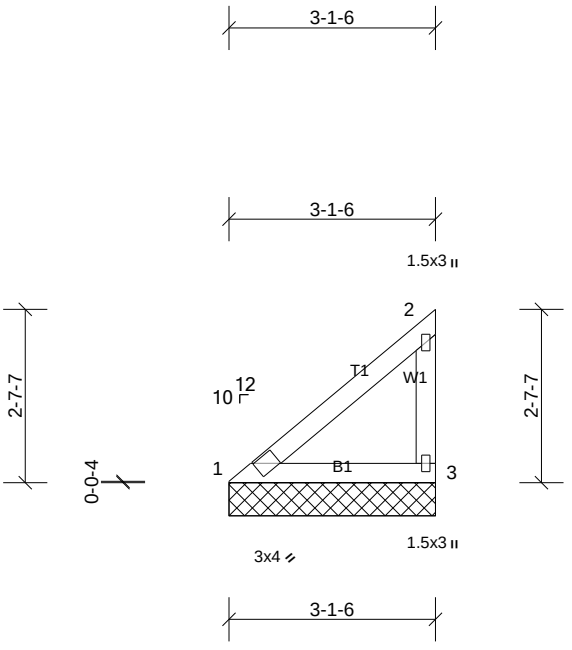

Loading	(psf)	Spacing	1-7-3	CSI		DEFL	in	(loc)	l/defl	L/d	PLATES	GRIP
TCLL (roof)	20.0	Plate Grip DOL	1.15	TC	0.08	Vert(LL)	n/a	-	n/a	999	MT20	244/190
TCDL	10.0	Lumber DOL	1.15	BC	0.10	Vert(TL)	n/a	-	n/a	999		
BCLL	0.0 *	Rep Stress Incr	YES	WB	0.00	Horiz(TL)	0.00	3	n/a	n/a		
BCDL	10.0	Code	IRC2015/TPI2014	Matrix-MP							Weight: 13 lb	FT = 20%

LUMBER

TOP CHORD	2x4 SP No.2
BOT CHORD	2x4 SP No.2
WEBS	2x4 SP No.3

BRACING

TOP CHORD	Structural wood sheathing directly applied or 3-1-6 oc purlins, except end verticals.
BOT CHORD	Rigid ceiling directly applied or 10-0-0 oc bracing.

REACTIONS (lb/size) 1=95/3-1-6, (min. 0-1-8), 3=95/3-1-6, (min. 0-1-8)
Max Horiz 1=71 (LC 7)
Max Uplift 1=-5 (LC 10), 3=-34 (LC 10)
Max Grav 1=95 (LC 1), 3=109 (LC 17)

FORCES (lb) - Max. Comp./Max. Ten. - All forces 250 (lb) or less except when shown.

NOTES

1) Unbalanced roof live loads have been considered for this design.
2) Wind: ASCE 7-10; Vult=130mph (3-second gust) Vasd=103mph; TCDL=6.0psf; BCDL=6.0psf; h=35ft; Cat. II; Exp B; Enclosed; MWFRS (envelope) exterior zone and C-C Exterior (2) zone; cantilever left and right exposed ; end vertical left and right exposed;C-C for members and forces & MWFRS for reactions shown; Lumber DOL=1.60 plate grip DOL=1.60
3) Gable requires continuous bottom chord bearing.
4) This truss has been designed for a 10.0 psf bottom chord live load nonconcurrent with any other live loads.
5) * This truss has been designed for a live load of 20.0psf on the bottom chord in all areas where a rectangle 3-06-00 tall by 2-00-00 wide will fit between the bottom chord and any other members.
6) Provide mechanical connection (by others) of truss to bearing plate capable of withstanding 34 lb uplift at joint 3 and 5 lb uplift at joint 1.
7) This truss is designed in accordance with the 2015 International Residential Code sections R502.11.1 and R802.10.2 and referenced standard ANSI/TPI 1.

NORTH CAROLINA PROFESSIONAL SEAL 054919 ENGINEER HUNTER B. DOSS
3/24/2025

Job	Truss	Truss Type	Qty	Ply	PBS/GUILFORD GEORGIAN RH ROOF
72507638	V6	Truss	2	1	Job Reference (optional)

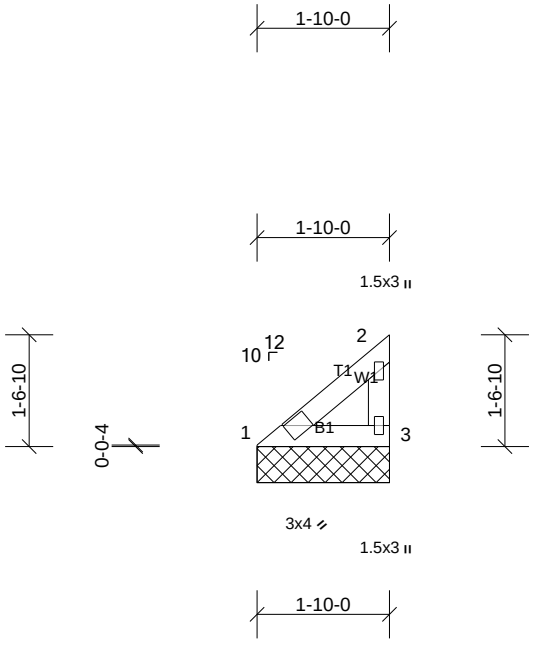

Loading	(psf)	Spacing	1-7-3	CSI		DEFL	in	(loc)	l/defl	L/d	PLATES	GRIP
TCLL (roof)	20.0	Plate Grip DOL	1.15	TC	0.02	Vert(LL)	n/a	-	n/a	999	MT20	244/190
TCDL	10.0	Lumber DOL	1.15	BC	0.03	Vert(TL)	n/a	-	n/a	999		
BCLL	0.0 *	Rep Stress Incr	YES	WB	0.00	Horiz(TL)	n/a	-	n/a	n/a		
BCDL	10.0	Code	IRC2015/TPI2014	Matrix-MP							Weight: 7 lb	FT = 20%

LUMBER

TOP CHORD	2x4 SP No.2
BOT CHORD	2x4 SP No.2
WEBS	2x4 SP No.3

BRACING

TOP CHORD	Structural wood sheathing directly applied or 1-10-0 oc purlins, except end verticals.
BOT CHORD	Rigid ceiling directly applied or 10-0-0 oc bracing.

REACTIONS (lb/size) 1=54/1-10-0, (min. 0-1-8), 3=54/1-10-0, (min. 0-1-8)
Max Horiz 1=37 (LC 7)
Max Uplift 1=-3 (LC 10), 3=-19 (LC 10)
Max Grav 1=54 (LC 1), 3=61 (LC 17)

FORCES (lb) - Max. Comp./Max. Ten. - All forces 250 (lb) or less except when shown.

NOTES

1) Unbalanced roof live loads have been considered for this design.
2) Wind: ASCE 7-10; Vult=130mph (3-second gust) Vasd=103mph; TCDL=6.0psf; BCDL=6.0psf; h=35ft; Cat. II; Exp B; Enclosed; MWFRS (envelope) exterior zone and C-C Exterior (2) zone; cantilever left and right exposed ; end vertical left and right exposed;C-C for members and forces & MWFRS for reactions shown; Lumber DOL=1.60 plate grip DOL=1.60
3) Gable requires continuous bottom chord bearing.
4) This truss has been designed for a 10.0 psf bottom chord live load nonconcurrent with any other live loads.
5) * This truss has been designed for a live load of 20.0psf on the bottom chord in all areas where a rectangle 3-06-00 tall by 2-00-00 wide will fit between the bottom chord and any other members.
6) Provide mechanical connection (by others) of truss to bearing plate capable of withstanding 19 lb uplift at joint 3 and 3 lb uplift at joint 1.
7) This truss is designed in accordance with the 2015 International Residential Code sections R502.11.1 and R802.10.2 and referenced standard ANSI/TPI 1.

NORTH CAROLINA PROFESSIONAL SEAL 054919 3/24/2025 ENGINEER HUNTER B. DOSS