STONEHAVEN-RALE

RALEIGH- LOT 00.0023 CAMPBELL RIDGE SF

(MODEL# 3656)

ELEVATION 1 - GL

95 PINON DRIVE

INDEX

DRB HOMES

AREA CALCULATIONS

ELEVATION 1	HEATED	COVERED / UNHEATED	UNCOVERED
FIRST FLOOR	1724 SF		
GARAGE		487 SF	
FRONT PORCH – ELEVATION 1		169 SF	
SECOND FLOOR	1939 SF		
OPTIONS			
BEDROOM 5	26 SF		
TOTAL	3689 SF	656 SF	

LOT SPECIFIC

1	LOT 00.0023	CAMPBELL RIDGE SF
		STONEHAVEN R2 ELEVATION 1
2	ADDRESS	95 PINON DR ANGIER, NC 27501

FRONT ELEVATION 1

SCALE: 1/8" = 1'-0"

REAR ELEVATION 1

SCALE: 1/8" = 1'-0"

FILE: Lot 00.0023.dwg DATE: 3/13/2025 2:06 PM

MASTER PLAN INFORMATION		
REVISION	DATE	UPDATED DATE
2-RALE	11-10-2023	09-13-2024

DRAWN BY: ITS

DATE: 03/13/2025

PLAN NO. 3656

DRB HOMES

HOUSE NAME: STONEHAVEN

DRAWING TITLE: FRONT & REAR ELEVATIONS

SHEET No. A1.1

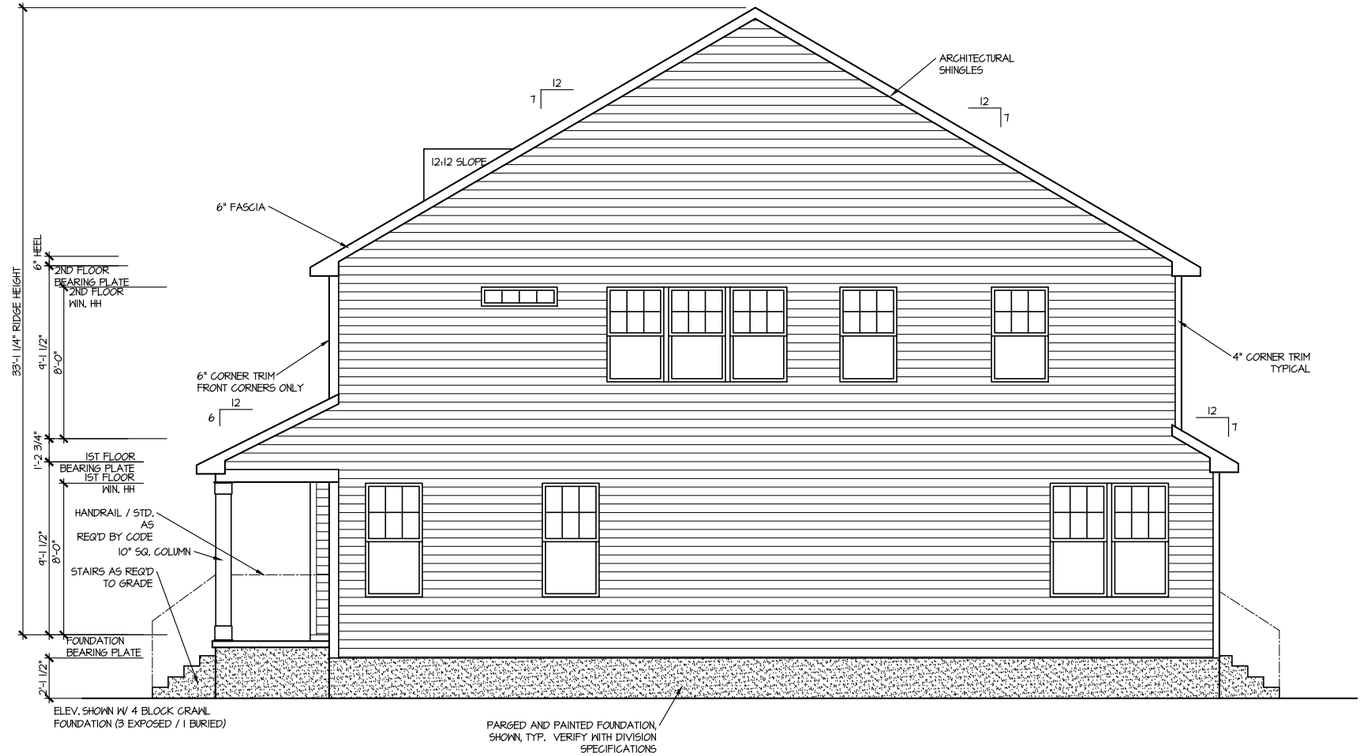

RIGHT ELEVATION 1

SCALE: 1/8" = 1'-0"

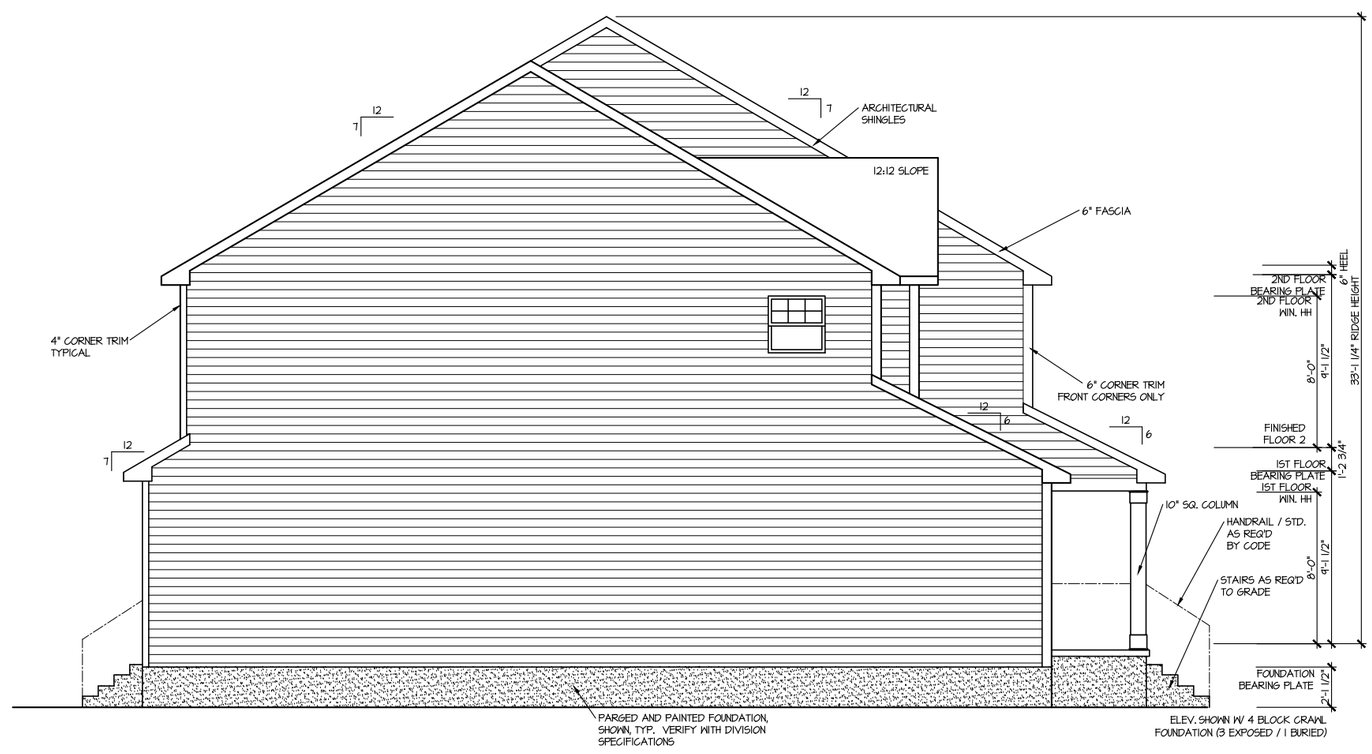

LEFT ELEVATION 1

SCALE: 1/8" = 1'-0"

FILE: Lot 00.0023.dwg DATE: 3/13/2025 2:06 PM

MASTER PLAN INFORMATION		
REVISION	DATE	UPDATED DATE
2-RALE	11-10-2023	09-13-2024

DRAWN BY: ITS

DATE: 03/13/2025

PLAN NO. 3656

DRB HOMES

HOUSE NAME: STONEHAVEN

DRAWING TITLE: RIGHT & LEFT ELEVATIONS

SHEET No. A1.2

ROOF VENTILATION CALCULATIONS:

ROOF AREA = 2141 SQ. FT.
OVERALL REQUIRED VENTILATION:
1 TO 150 = 14.27 SQ. FT.
1 TO 300 = 7.14 SQ. FT.
50-80% IN TOP THIRD = 3.57 - 5.71 SQ. FT. (1 TO 300)

NET FREE AREA OF VENTED SOFFIT = 5.7 SQ. IN / LINEAR FT.
NET FREE AREA OF RIDGE VENT = 18 SQ. IN/ LINEAR FT.

LOWER VENTING: (BOTTOM 2/3 RDS)
86 LINEAR FEET OF SOFFIT X 5.7 SQ. IN. = 3.40 SQ. FT.
UPPER VENTING: (TOP 1/3 RD)
45 LINEAR FEET OF RIDGE X 18 SQ. IN = 5.63 SQ. FT.
5.63 SQ. FT. BETWEEN 50% - 80%
(1 TO 300 ALLOWED)
TOTAL ROOF VENTILATION: 9.03 SQ. FT. > 7.14 SQ. FT. (REQ'D)

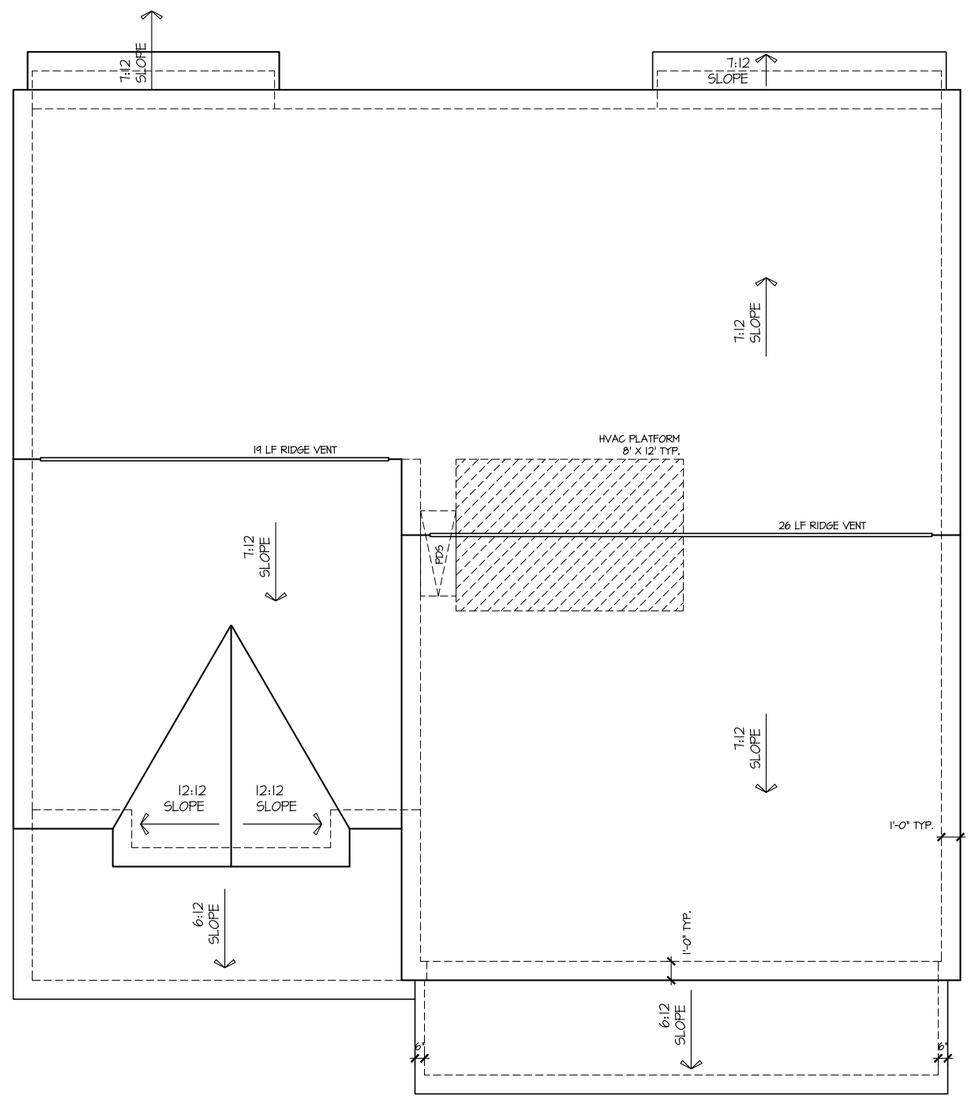

ROOF PLAN ELEV. 1

SCALE: 1/8" = 1'-0"

FILE: Lot 00.0023.dwg DATE: 3/13/2025 2:06 PM

MASTER PLAN INFORMATION

REVISION	DATE	UPDATED DATE
2-RALE	11-10-2023	09-13-2024

DRAWN BY: ITS
DATE: 03/13/2025
PLAN NO. 3656

DRB HOMES

HOUSE NAME: STONEHAVEN
DRAWING TITLE: ROOF PLAN

SHEET No. A1.3

CRAWLSPACE VENT CALCULATIONS:

CRAWL AREA = 1724 SQ. FT.
OVERALL REQUIRED VENTILATION:
1 TO 150 = 11.494 SQ. FT.

NET FREE AREA OF VENT = 62 SQ. IN PER VENT
WITTEN AUTOMATIC VENT B-EELBLACK (MB) OR EQUAL

VENTING REQUIREMENT:
9.97 SQ. FT / 62 SQ. IN = 27.5 VENTS = 28 VENTS

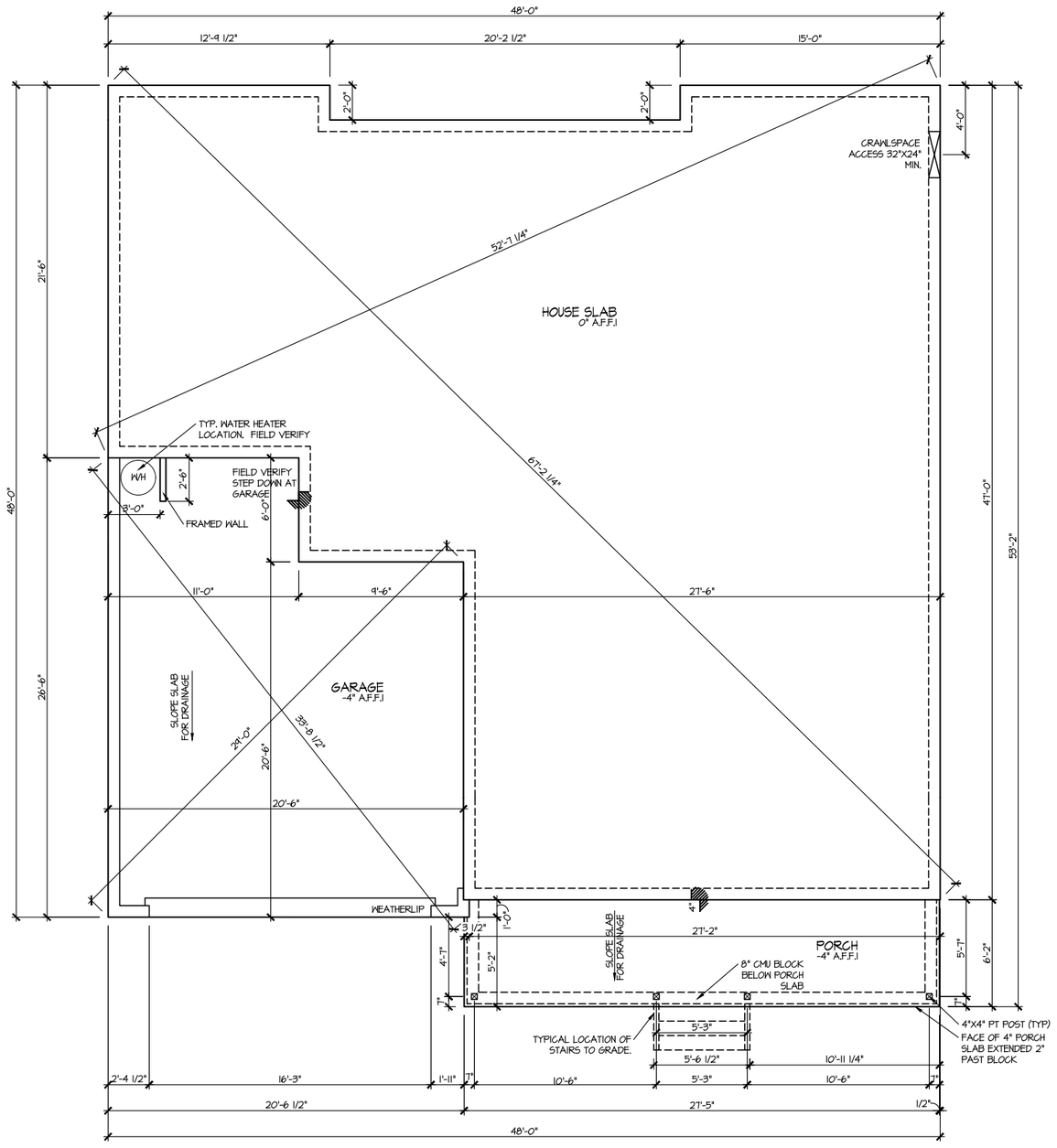

ELEVATION 1
CRAWL SPACE PLAN

SCALE: 1/8" = 1'-0"

FILE: Lot 00.0023.dwg DATE: 3/13/2025 2:06 PM

MASTER PLAN INFORMATION	
REVISION	DATE
2-RALE	11-10-2023
UPDATED DATE	
09-13-2024	

DRAWN BY: ITS

DATE: 03/13/2025

PLAN NO. 3656

DRB HOMES

HOUSE NAME: STONEHAVEN

DRAWING TITLE: CRAWL SPACE PLAN

SHEET No. A2.1

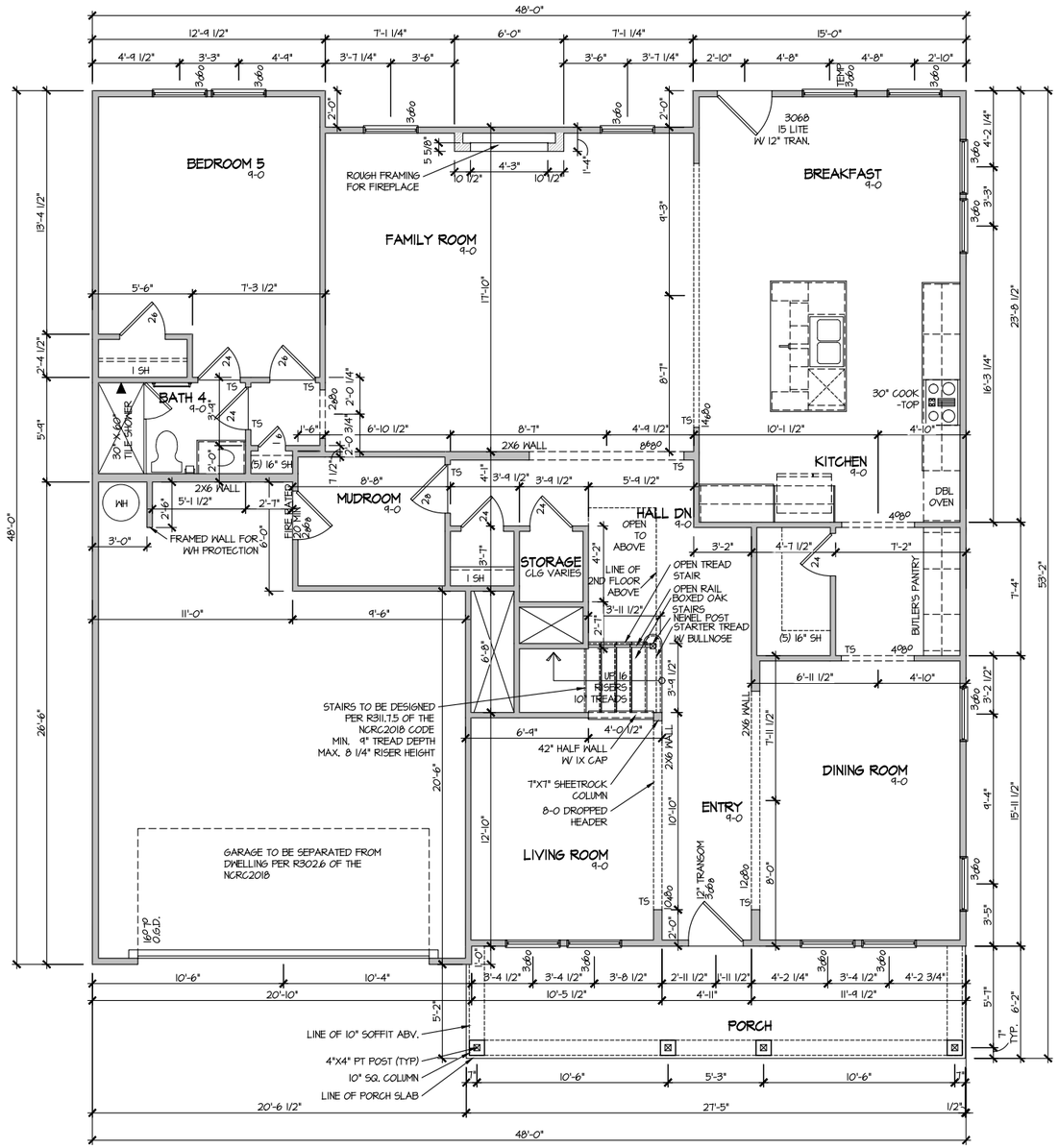

ELEVATION 1
FIRST FLOOR PLAN

SCALE: 1/8" = 1'-0"

FILE: Lot 00.0023.dwg DATE: 3/13/2025 2:06 PM

MASTER PLAN INFORMATION		
REVISION	DATE	UPDATED DATE
2-RALE	11-10-2023	09-13-2024

DRAWN BY: ITS

DATE: 03/13/2025

PLAN NO. 3656

DRB HOMES

HOUSE NAME: STONEHAVEN

DRAWING TITLE: FIRST FLOOR PLAN

SHEET No. A3.1

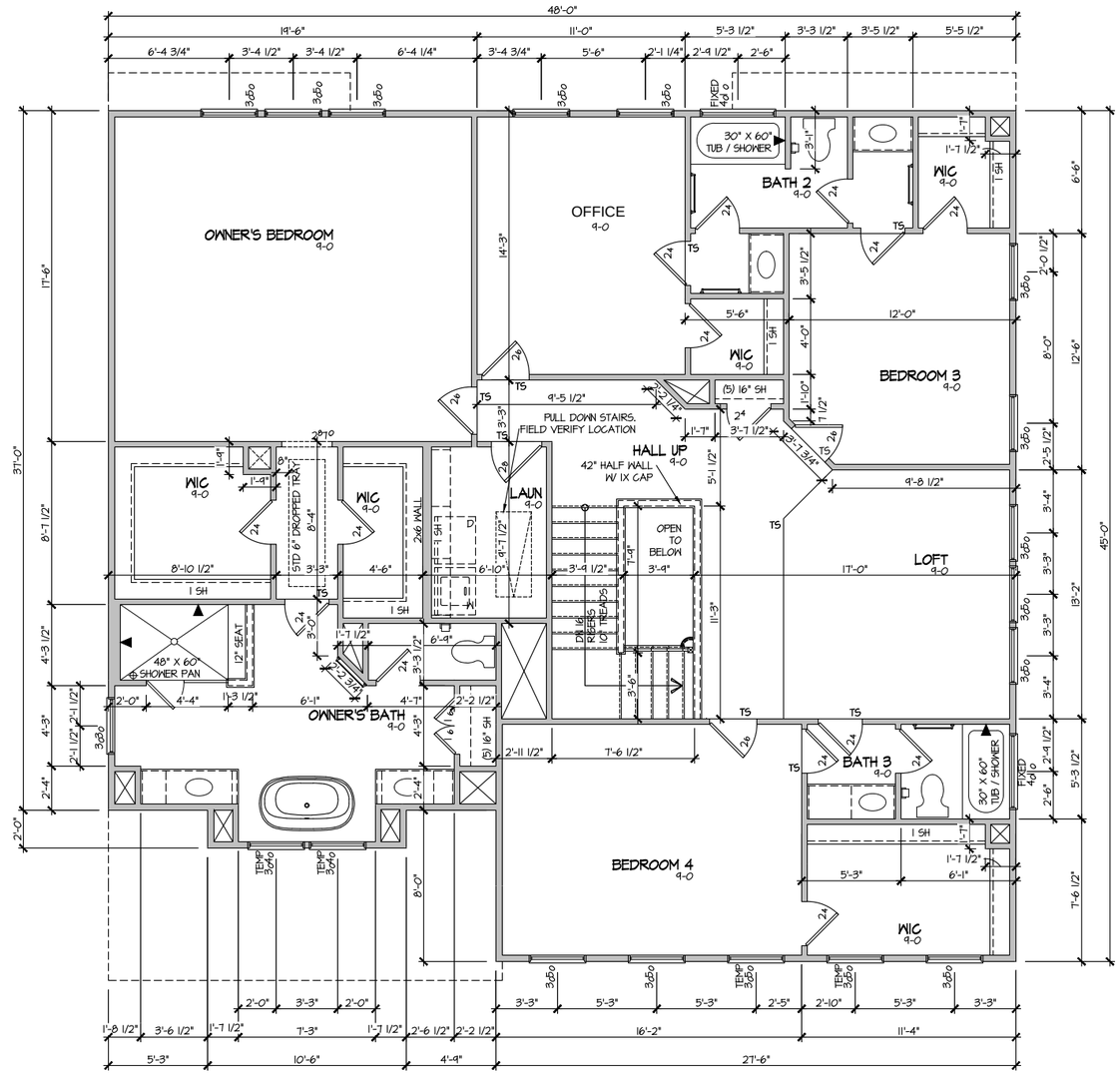

ELEVATION 1
SECOND FLOOR PLAN

SCALE: 1/8" = 1'-0"

FILE: Lot 00.0023.dwg DATE: 3/13/2025 2:06 PM

MASTER PLAN INFORMATION		
REVISION	DATE	UPDATED DATE
2-RALE	11-10-2023	09-13-2024

DRAWN BY: ITS

DATE: 03/13/2025

PLAN NO. 3656

DRB HOMES

HOUSE NAME: STONEHAVEN

DRAWING TITLE: SECOND FLOOR PLAN

SHEET No. A3.2

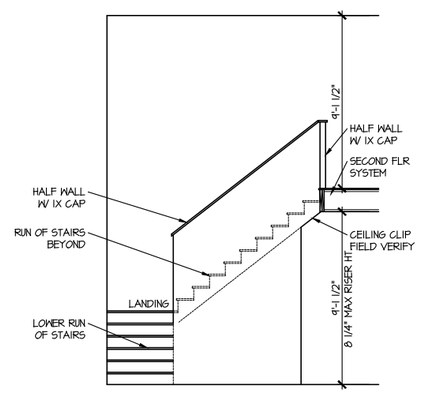

STAIR SECTION

SCALE: 1/8" = 1'-0"

MASTER PLAN INFORMATION		
REVISION	DATE	UPDATED DATE
2-RALE	11-10-2023	09-13-2024

DRAWN BY: ITS

DATE: 03/13/2025

PLAN NO. 3656

DRB HOMES

HOUSE NAME: STONEHAVEN

DRAWING TITLE: BUILDING SECTION

SHEET No. A4.1

FILE: Lot 00.0023.dwg DATE: 3/13/2025 2:06 PM

ELECTRICAL LEGEND

	SINGLE POLE SWITCH
3	THREE WAY SWITCH
4	FOUR WAY SWITCH
	DUPLEX AFCI RECEPTACLE
	DUPLEX AFCI RECEPTACLE - BOTTOM HALF SWITCHED
	DUPLEX AFCI RECEPTACLE - FLOOR MOUNTED
220V	RECEPTACLE - 220V
GFI	DUPLEX AFCI RECEPTACLE - GFI
WP/GFI	DUPLEX AFCI RECEPTACLE - WATERPROOF GFI
SD	SMOKE DETECTOR - WIRED IN SERIES
	EXHAUST FAN MOTOR
	FAN LIGHT COMBO
WP	WATER PROOFED
	CO DETECTOR
	DOOR CHIME
	LIGHT FIXTURE - WALL MOUNTED
	LIGHT FIXTURE - CEILING MOUNTED
	LIGHT FIXTURE - CEILING MOUNTED LED
LED	LIGHT FIXTURE - LED SURFACE MOUNTED
	LIGHT FIXTURE - RECESSED CAN
P	PULLCHAIN LAMPHOLDER
K	KEYLESS LAMPHOLDER
	2'x4' STRIP LIGHT

NOTE: ALL ELECTRICAL WORK SHALL CONFORM TO THE REQUIREMENTS OF THE ADOPTED VERSION OF THE NATIONAL ELECTRICAL CODE, THE LOCAL POWER COMPANY AND TO ALL APPLICABLE LOCAL REGULATIONS.

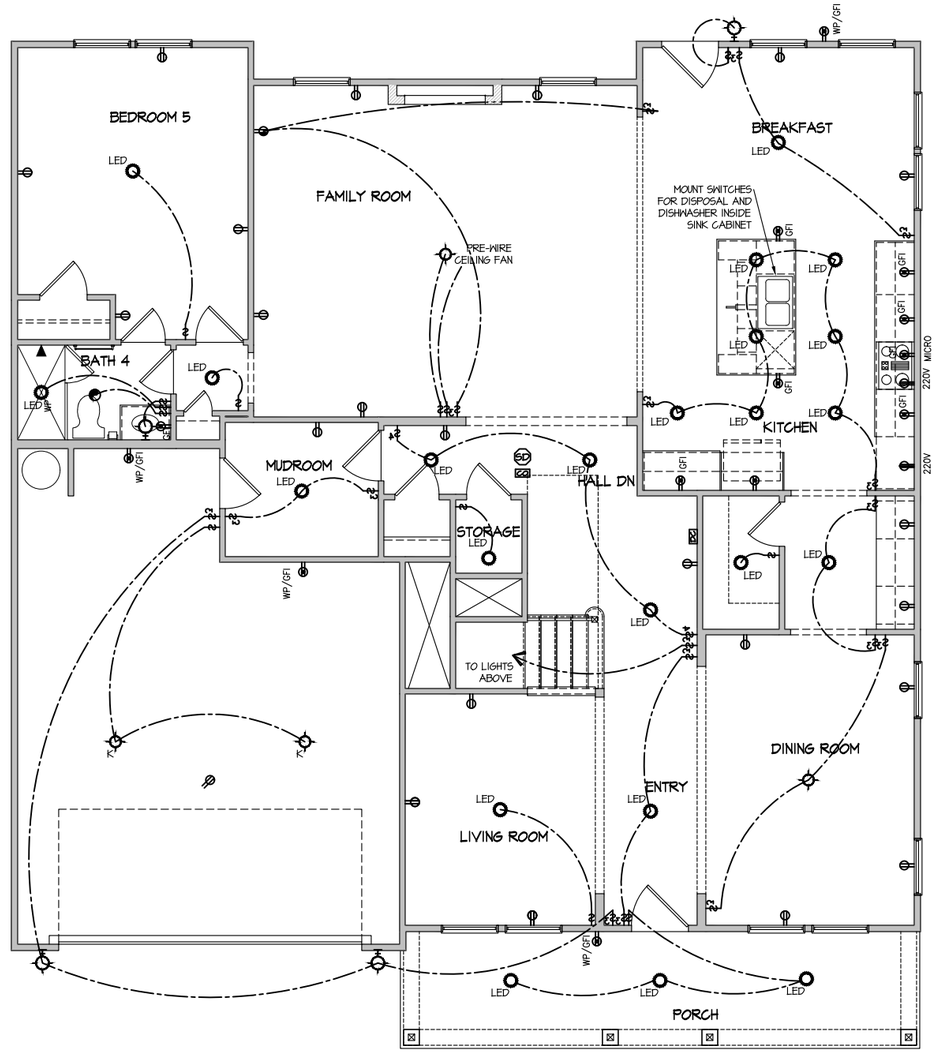

ELECTRICAL PLAN
FIRST FLOOR - ELEV. 1

SCALE: 1/8" = 1'-0"

FILE: Lot 00.0023.dwg DATE: 3/13/2025 2:06 PM

MASTER PLAN INFORMATION		
REVISION	DATE	UPDATED DATE
2-RALE	11-10-2023	09-13-2024

DRAWN BY: ITS

DATE: 03/13/2025

PLAN NO. 3656

DRB HOMES

HOUSE NAME: STONEHAVEN

DRAWING TITLE: FIRST FLOOR ELECTRICAL

SHEET No. E1.1

ELECTRICAL LEGEND

$	SINGLE POLE SWITCH
$3	THREE WAY SWITCH
$4	FOUR WAY SWITCH
	DUPLEX AFCI RECEPTACLE
	DUPLEX AFCI RECEPTACLE - BOTTOM HALF SWITCHED
	DUPLEX AFCI RECEPTACLE - FLOOR MOUNTED
220V	RECEPTACLE - 220V
GFI	DUPLEX AFCI RECEPTACLE - GFI
WP/GFI	DUPLEX AFCI RECEPTACLE - WATERPROOF GFI
SD	SMOKE DETECTOR - WIRED IN SERIES
	EXHAUST FAN MOTOR
	FAN LIGHT COMBO
WP	WATER PROOFED
	CO DETECTOR
	DOOR CHIME
	LIGHT FIXTURE - WALL MOUNTED
	LIGHT FIXTURE - CEILING MOUNTED
	LIGHT FIXTURE - CEILING MOUNTED LED
LED	LIGHT FIXTURE - LED SURFACE MOUNTED
	LIGHT FIXTURE - RECESSED CAN
P	PULLCHAIN LAMPHOLDER
K	KEYLESS LAMPHOLDER
	2'x4' STRIP LIGHT

NOTE: ALL ELECTRICAL WORK SHALL CONFORM TO THE REQUIREMENTS OF THE ADOPTED VERSION OF THE NATIONAL ELECTRICAL CODE, THE LOCAL POWER COMPANY AND TO ALL APPLICABLE LOCAL REGULATIONS.

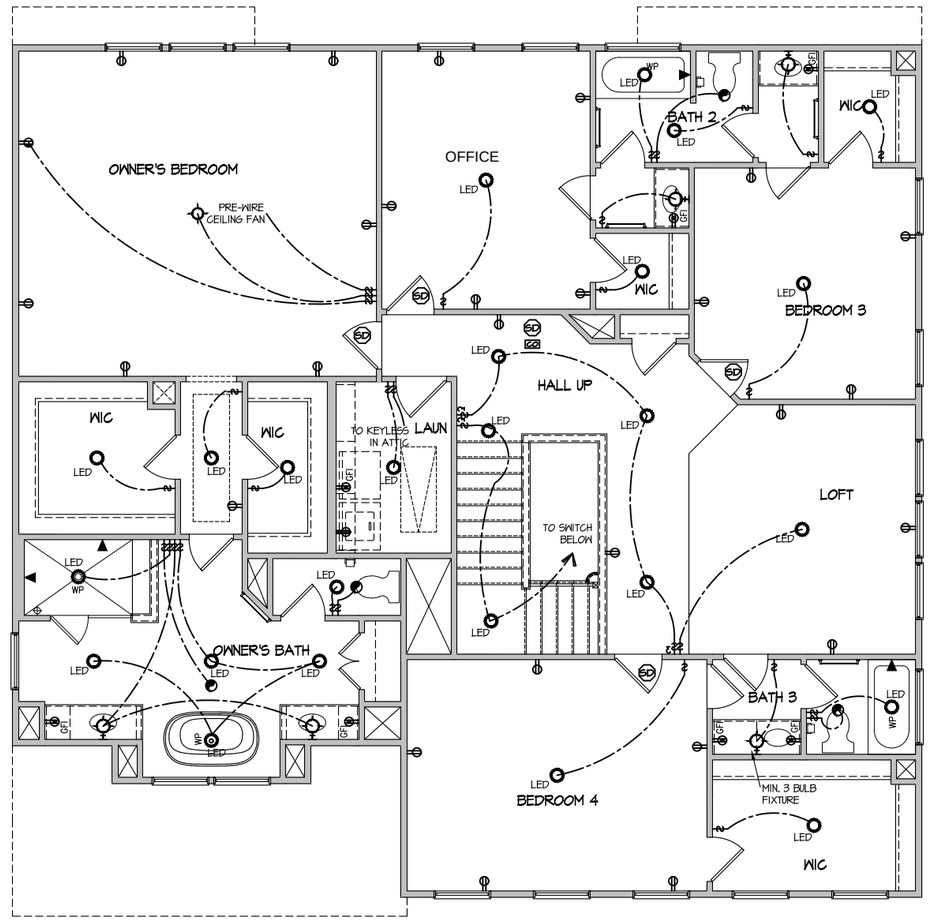

ELECTRICAL PLAN
SECOND FLOOR - ELEV. 1

SCALE: 1/8" = 1'-0"

FILE: Lot 00.0023.dwg DATE: 3/13/2025 2:06 PM

MASTER PLAN INFORMATION		
REVISION	DATE	UPDATED DATE
2-RALE	11-10-2023	09-13-2024

DRAWN BY: ITS

DATE: 03/13/2025

PLAN NO. 3656

DRB HOMES

HOUSE NAME: STONEHAVEN

DRAWING TITLE: SECOND FLOOR ELECTRICAL

SHEET No. E1.2

CONNECTION SPECIFICATIONS (TYP. U.N.O.)

DESCRIPTION OF BLDG. ELEMENT	3"x0.131" NAILS	3"x0.120" NAILS
JOIST TO SOLE PLATE	(3) TOENAILS	(3) TOENAILS*
SOLE PLATE TO JOIST/BLK'G.	(3) NAILS @ 4" o.c.	(3) NAILS @ 4" o.c.
STUD TO SOLE PLATE	(2) TOENAILS	(3) TOENAILS*
TOP OR SOLE PLATE TO STUD	(2) NAILS	(3) NAILS
RIM TO TOP PLATE	TOENAILS @ 8" o.c.	TOENAILS @ 6" o.c.*
BLK'G. BTWN. JOISTS TO TOP PL.	(3) TOENAILS	(3) TOENAILS*
DOUBLE STUD	NAILS @ 24" o.c.	NAILS @ 16" o.c.
DOUBLE TOP PLATE	NAILS @ 24" o.c.	NAILS @ 16" o.c.
DOUBLE TOP PLATE LAP SPLICE	(9) NAILS IN LAPPED AREA	(11) NAILS IN LAPPED AREA
TOP PLATE LAP @ CORNERS & INTERSECTING WALLS	(2) NAILS	(2) NAILS

* 2½"x0.113 IS AN ACCEPTABLE ALTERNATIVE TO A 3"x0.120", SAME SPACING OR NUMBER OF NAILS. (ONLY ACCEPTABLE WHERE * ARE SHOWN)

MEANS & METHODS NOTES

THE STRUCTURE IS DESIGNED TO BE SELF SUPPORTING AND STABLE AFTER THE BUILDING IS FINISHED AND ALL PLAN, DETAIL, AND NOTE SPECIFICATIONS HAVE BEEN COMPLETED. IT IS THE CONTRACTOR'S SOLE RESPONSIBILITY TO DETERMINE THE ERECTION PROCEDURES AND SEQUENCE TO INSURE THE SAFETY OF THE BUILDING AND ITS COMPONENTS DURING CONSTRUCTION. THIS INCLUDES, BUT IS NOT LIMITED TO, THE ADDITION OF NECESSARY SHORING, SHEETING, TEMPORARY BRACING, GUYS, AND TIE-DOWNS. CONTRACTOR SHALL BE RESPONSIBLE FOR ALL SHORING AND BRACING REQUIRED TO STABILIZE AND PROTECT EXISTING AND ADJACENT STRUCTURES AND SYSTEMS DURING COURSE OF DEMOLITION AND CONSTRUCTION OF THE PROJECT.

STRUCTURAL DESIGN AND SPECIFICATIONS ASSUME THAT ALL SUPPORTING AND NON-SUPPORTING ELEMENTS IN CONTACT WITH FLOOR FRAMING ARE LEVEL, INCLUDING, BUT NOT LIMITED TO; FOUNDATIONS, SLABS ON GRADE, BEAMS, WALLS, AND NON-BEARING ELEMENTS. IT IS THE CONTRACTOR'S RESPONSIBILITY TO VERIFY LEVELNESS AND MAKE ADJUSTMENTS AS NECESSARY, INCLUDING CONSIDERATION OF THOSE AREAS THAT MAY BE WITHIN CONTRACTUAL, INDUSTRY, OR WARRANTY TOLERANCES.

ADDITIONAL NOTES FOR TRUSS & I-JOIST MANUFACTURER

ROOF TRUSS, FLOOR TRUSS AND ENGINEERED JOISTS SHALL BE DESIGNED TO MEET THE DIFFERENTIAL DEFLECTION CRITERIA BELOW, UNLESS NOTED OTHERWISE ON PLAN.

TRUSSES/JOISTS SHALL BE DESIGNED SO THAT DIFFERENTIAL DEFLECTION BETWEEN ADJACENT PARALLEL TRUSSES/JOISTS OR GIRDER TRUSSES/FLUSH BEAMS DO NOT EXCEED THE FOLLOWING:

A. ROOF TRUSSES:
1/4" DEAD LOAD
B. FLOOR TRUSSES, ATTIC TRUSSES, & I-JOISTS:
1/8" DEAD LOAD
C. FLOOR TRUSSES & ATTIC TRUSSES ADJACENT TO FLOOR FRAMING BY OTHERS:
LIMIT ABSOLUTE TRUSS DEFLECTION TO 3/16" DEAD LOAD. (NOT DIFFERENTIAL DEFLECTION)

GENERAL STRUCTURAL NOTES

- DESIGN IS BASED ON 2018 NORTH CAROLINA STATE BUILDING CODE: RESIDENTIAL CODE.
- WOOD FRAME ENGINEERING IS BASED ON NDS, "NATIONAL DESIGN SPECIFICATION FOR WOOD CONSTRUCTION" - LATEST EDITION.
- DESIGN LOADS:

ROOF — DEAD = 7 PSF T.C., 10 PSF B.C.
LIVE = 16 PSF
LOAD DURATION FACTOR = 1.25

FLOOR — LIVE = 40 PSF (30 PSF @ SLEEPING AREAS)
DEAD = 10 PSF (I-JOISTS & SOLID SAWN)
10 PSF T.C., 5 PSF B.C. (TRUSSES)
(ADD'L 10 PSF @ TILE)

LATERAL — 120 MPH, EXPOSURE B. SEISMIC A/B.

SOIL — 2,000 PSF ASSUMED ALLOWABLE BEARING PRESSURE (TO BE VERIFIED BY BUILDER)

GENERAL FRAMING

- ALL TYP. NAIL FASTENER REQUIREMENTS ARE NOTED IN STANDARD CONNECTIONS TABLE OR ON PLANS. ALL NAILS SPECIFIED ARE MIN DIAMETER AND LENGTH REQUIRED FOR CONNECTION. ALL HANGER NAILS SHALL BE INSTALLED PER MANUFACTURER'S REQUIREMENTS FOR MAX CHARTED CAPACITY. NOTE: HANGERS USE COMMON NAIL DIAMETERS NOT TYPICAL FRAMING GUN NAILS.
- REFER TO FASTENING SCHEDULE TABLE R602.3(1) FOR ALL CONNECTIONS, TYP. U.N.O.
- EXT. & INT. BRG WALLS SHALL BE 2x4 OR 2x6 (AS SHOWN ON PLANS) @ 16" O.C. SPF OR SYP "STUD" GRADE LUMBER, OR BETTER, U.N.O.
  - WALLS OVER 12' TALL SHALL BE PER PLAN.
- ALL HEADERS, BEAMS & OTHER STRUCTURAL MEMBERS SHALL BE SPRUCE-PINE-FIR #2 (SPF) OR SOUTHERN PINE #2 (SYP) LUMBER, OR BETTER (KILN-DRIED). ALL HEADERS HAVE BEEN DESIGNED BASED ON CALCULATED LOADS & SIZED ACCORDINGLY. CODE TABLES HAVE NOT BEEN USED.
- ALL NON-BEARING INTERIOR STUD WALLS SHALL BE CONSTRUCTED WITH 2x 'STUD' GRADE MEMBERS SPACED @ 16" O.C. (MAX., U.N.O.)
  - HEADERS IN NON-LOAD BEARING WALLS SHALL BE: (1)2x4/6 FLAT @ OPENINGS UP TO 4', (2)2x4/6 FLAT UP TO 8'.
- ALL FRAMING LUMBER SHALL BE DRIED TO 15% MC (KD-15).
- ENGINEERED LUMBER BEAMS TO MEET OR EXCEED THE FOLLOWING:
  - 'LSL' - Fb=2325 psi; Fv=310 psi; E=1.55x10^6 psi
  - 'LVL' - Fb=2600 psi; Fv=285 psi; E=2.0x10^6 psi
  - 'PSL' - FB=2900 PSI; FV=290 PSI; E=2.0X10^6 PSI
- M+K SHALL BE FULLY INDEMNIFIED FOR ANY AND ALL ISSUES RESULTING FROM OR RELATED TO ANY BUILDING COMPONENT IF THE OWNER DOES NOT SUBMIT THE COMPONENT SHOP DRAWINGS TO M+K FOR STRUCTURAL REVIEW PRIOR TO FABRICATION, DELIVERY, OR INSTALLATION.
- FOR 2 & 3 PLY BEAMS OF EQUAL WIDTH, FASTEN PLIES TOGETHER WITH 3 ROWS OF 3"x0.120" NAILS @ 8" O/C OR 2 ROWS ¼"x3½" SIMPSON SDS SCREWS (OR 3½" TRUSSLOK SCREWS) @ 16" O/C. USE A MINIMUM OF 3 ROWS FOR BEAM DEPTHS OF 14" OR GREATER. APPLY FASTENING AT BOTH FACES FOR 3-PLY CONDITION. LOCATE TOP & BOTTOM NAILS/SCREWS 2" FROM EDGE. SOLID 3½" OR 5¼" BEAMS ARE ACCEPTABLE. USE 2 ROWS OF NAILS FOR 2x6 & 2x8 MEMBERS.
- FOR 4 PLY BEAMS OF EQUAL WIDTH, FASTEN PLIES TOGETHER WITH 3 ROWS OF ¼"x6" SIMPSON SDS SCREWS (OR 6 ¾" TRUSSLOK SCREWS) @ 16" O/C. USE A MINIMUM OF 4 ROWS FOR BEAM DEPTHS OF 14" OR GREATER. APPLY FASTENING AT BOTH FACES (ONE SIDE ONLY FOR TRUSSLOK SCREWS). LOCATE TOP AND BOTTOM SCREWS 2" FROM EDGE. A SOLID 7" BEAM IS ACCEPTABLE.
- ALL HEADERS SHALL BE SUPPORTED BY (1)2x JACK STUD & (1)2x KING STUD, MINIMUM.
  - THE NUMBER OF STUDS SPECIFIED AT A SUPPORT INDICATES THE NUMBER OF JACK STUDS REQUIRED, U.N.O..
- ALL MULTI-PLY STUDS TO BE FASTENED TOGETHER w/ 3"X0.131" NAILS @ 24" O.C. (MIN.), EACH PLY.
- PROVIDE SOLID BLOCKING IN FLOOR SYSTEM UNDER ALL POSTS CONTINUOUS TO FND./BEARING. BLOCKING TO MATCH POST ABOVE.
- FASTEN 2x WOOD PLATES TO TOP FLANGE OF STEEL BEAMS WITH P.A.F.'s ('HILTI' X-CF PINS OR EQUAL) @ 16" O.C. STAGGERED, OR 1/2" DIA. BOLTS @ 48" O.C. STAGGERED.
- ALL EXTERIOR 4x4 WOOD POSTS SHALL HAVE SIMPSON BCS2-2/4 CAP & ABW44Z BASE, U.N.O.

FLOOR FRAMING

- I-JOISTS/TRUSSES SHALL BE DESIGNED BY MANUF. TO MEET OR EXCEED L/480 LIVE LOAD DEFLECTION CRITERIA. (EXCLUDES MARBLE FLOORS - CONTACT M&K FOR MARBLE FLOOR DESIGNS)
- AT I-JOIST FLOORS, PROVIDE 1 1/8" MIN. OSB RIM BOARD.
- METAL HANGERS SHALL BE SPECIFIED BY MANUFACTURER, U.N.O.
- FLOOR SHEATHING SHALL BE 23/32" A.P.A. RATED 'STURD-I-FLOOR' 24" O.C, EXPOSURE 1 (OR APPROVED EQUAL) WITH TONGUE AND GROOVE EDGES. FASTEN TO FRAMING MEMBERS W/ GLUE AND
  - 2 ½" x 0.131" NAILS @ 6"o.c. @ PANEL EDGES & @ 12"o.c. FIELD.
  - 2 ⅜" x 0.120" NAILS @ 4" O.C. @ PANEL EDGES & @ 8" O.C. FIELD.
  - 2 ⅜" x 0.113" NAILS @ 3" O.C. @ PANEL EDGES & @ 6" O.C. IN FIELD.
  - #6 x 2" MIN. SCREWS @ 6" O.C. @ PANEL EDGES & @ 12" O.C. FIELD.

ROOF FRAMING

- BAY WINDOWS & SHED ROOFS (UP TO 6' SPAN) CAN BE 2x4 OR 2x6 RAFTERS & CEILING JOISTS @ 16/24" O.C.
- FASTEN EACH ROOF TRUSS TO TOP PLATE W/ SIMPSON H2.5T CLIP (OR APPROVED EQUAL) @ ALL BEARING POINTS. PROVIDE (2) H2.5T CLIPS AT 2-PLY GIRDER TRUSSES, (3) H2.5T CLIPS AT 3-PLY GIRDER TRUSSES & ROOF BEAMS - AT ALL BEARING POINTS.
- METAL HANGERS SHALL BE SPECIFIED BY THE MANUFACTURER, U.N.O.
- ERECT AND INSTALL ROOF TRUSSES PER WTCA & TPI'S BCSI 1-08 "GUIDE TO GOOD PRACTICE FOR HANDLING, INSTALLING & BRACING OF METAL PLATE CONNECTED WOOD TRUSSES."
- SUPPORT PORCH & SHORT SPAN ROOF TRUSSES (MAX 7' SPAN) W/ 2x4 LEDGER FASTENED TO:
  - RIM BOARD W/ (2) 3"x0.131" NAILS @ 16" O.C. MAX. (I-JOISTS)
  - TRUSS VERTICALS W/ (3) 3"x0.131" NAILS @ 19.2" O.C. MAX. (FLOOR TRUSSES)
- ROOF SHEATHING SHALL BE 7/16" A.P.A. RATED SHEATHING 24/16 EXPOSURE 1 (OR APPROVED EQUAL). FASTEN TO FRAMING MEMBERS
  - W/ 2 ½" x 0.131" NAILS @ 6"o.c. @ PANEL EDGES & @ 12" O.C. FIELD.
  - W/ 2 ⅜" x 0.120" NAILS @ 4"o.c. @ PANEL EDGES & @ 8" O.C. FIELD.
  - W/ 2 ⅜" x 0.113" NAILS @ 3"o.c. @ PANEL EDGES & @ 6" O.C. FIELD.

VENEER LINTEL SCHEDULE

SPAN (MAX)	HEIGHT OF VENEER ABOVE LINTEL	STEEL ANGLE SIZE
3'-0"	20 FT. MAX	L3"x3"x¼"
6'-0"	3 FT. MAX	L3"x3"x¼"
	12 FT. MAX	L4"x3"x¼"
	20 FT. MAX	L5"x3½"x5/16"
8'-0"	3 FT. MAX	L4"x4"x¼" *
	12 FT. MAX	L5"x3½"x5/16"
	16 FT. MAX	L6"x3½"x⅜"
9'-6"	12 FT. MAX	L6"x3½"x5/16"
16'-0"	2 FT. MAX	L7"x4"x½" **
	3 FT. MAX	L8"x4"x½" **

ALL LINTELS:
- SHALL SUPPORT 2 ⅝" - 3 ½" VENEER w/ 40 psf MAXIMUM WEIGHT.
- < 16' SHALL HAVE 4" MIN. BEARING
- >= 16' SHALL HAVE 8" MIN. BEARING
- < 16' SHALL NOT BE FASTENED BACK TO HEADER.
- >= 16' SHALL BE FASTENED BACK TO WOOD HEADER IN WALL @48"o.c. w/ ½" DIA. x 3 ½" LONG LAG SCREWS IN 2" LONG VERTICALLY SLOTTED HOLES.
- MAX. VENEER HT. APPLIES TO ANY PORTION OF BRICK OVER THE OPENING.
- ALL LINTELS SHALL BE LONG LEG VERTICAL.
- WHEN SUPPORTING VENEER < 3" WIDE THE EXTERIOR TOE OF THE HORIZONTAL LEG MAY BE CUT IN THE FIELD TO BE 3 ¼" WIDE OVER THE BEARING LENGTH ONLY. THIS IS TO ALLOW FOR MORTAR JOINT FINISHING.
- SEE STRUCTURAL PLANS FOR ANY LINTEL CONDITION NOT

SD2.1 REFERS TO SD2.1A FOR LVL/PSL/LSL BEAMS OR SD2.1B FOR FLITCH BEAMS OR SD2.1C FOR STEEL BEAMS

LATERAL BRACING & SHEAR WALL SHEATHING SPECIFICATIONS

THIS MODEL HAS BEEN DESIGNED TO RESIST LATERAL FORCES RESULTING FROM:

120 MPH WIND IN 2018 NCSBC:RC

(120 MPH WIND SPEED IN ASCE 7-10 WIND MAP, PER IRC R301.2.1.1)
EXP. B, RISK CAT. 2 & SEISMIC CAT. A/B.

THE DESIGN WAS COMPLETED PER 2015 IBC (SECTION 1609) & ASCE 7-10, AS PERMITTED BY R301.1.3 OF THE 2018 NCSBC:RC, OR THE SIMPLIFIED PRESCRIPTIVE PROCEDURE IN ACCORDANCE WITH THE 2015 IRC IF THE PARAMETERS OF SECTION R602.12 COMPLY. ACCORDINGLY, THIS MODEL, AS DOCUMENTED AND DETAILED HEREWITHIN, IS ADEQUATE TO RESIST THE CODE REQUIRED LATERAL FORCES.

DESIGN WIND UPLIFT LOADS HAVE BEEN CALCULATED UTILIZING ASCE 7-10 (ACCEPTED ENGINEERING PRACTICE) AS ALLOWED PER 2018 NCSBC:RC SECTION R802.11.1.1. THIS MODEL HAS BEEN DETAILED WHERE REQUIRED & ENGINEERED TO RESIST THE WIND UPLIFT LOAD PATH PER SECTIONS R602.3.5& R802.11.

EXT. WALL SHEATHING SPECIFICATION

- 7/16" OSB OR 15/32" PLYWOOD:
  FASTEN SHEATHING w/ 2 ⅜"x0.113" NAILS @ 6" O.C. AT EDGES & @ 12" O.C. IN THE PANEL FIELD. TYP, U.N.O.
- HORIZONTAL BLOCKING OF EXT. WALL/SHEAR WALL PANEL EDGES IS NOT REQUIRED BY THIS DESIGN EXCEPT FOR THOSE AREAS SPECIFICALLY NOTED.
- ALL EXT. WALLS SHALL BE CONTINUOUSLY SHEATHED AND ARE CONSIDERED SHEAR WALLS.
- ALT. STAPLE CONNECTION SPEC: 1½" 16 GA STAPLES (7/16" CROWN) @ 3" O.C. AT EDGES & @ 6" O.C IN FIELD.

BLOCKED PANEL EDGES

- AT DESIGNATED AREAS - FASTEN SHEATHING w/ 2 ⅜" x 0.113" NAILS @ 6" O.C. AT ALL PANEL EDGES AND 12" O.C. IN THE PANEL FIELD OR 1 ¾" 16 GA STAPLES (7/16" CROWN) @ 3" O.C. AT EDGES & @ 6" O.C IN FIELD. ALL SHEATHING PANELS SHALL BE ORIENTED AND INSTALLED FULL HEIGHT OF SHEAR WALL OR 2x HORIZONTAL BLOCKING SHALL BE PROVIDED TO SUPPORT ALL UNSUPPORTED PANEL EDGES & EDGE FASTENING.

3" O.C. EDGE NAILING

- AT DESIGNATED AREAS - FASTEN PANEL EDGES OF WOOD STRUCTURAL WALL SHEATHING TO FRAMING w/ 8d NAILS @ 3" O.C. NO STAPLE ALTERNATIVE AVAILABLE AT THIS SPEC. ALL SHEATHING PANELS SHALL BE ORIENTED AND INSTALLED FULL HEIGHT OF SHEAR WALL OR 2x HORIZONTAL BLOCKING SHALL BE PROVIDED TO SUPPORT UNSUPPORTED PANEL EDGES AND 3" O.C. EDGE FASTENING.

NOTES

- SEE CONNECTION SPECIFICATIONS CHART FOR STANDARD SHEAR TRANSFER DETAILING. IF ADDITIONAL CAPACITY IS REQUIRED BY DESIGN, IT WILL BE SPECIFICALLY NOTED ON PLAN.
- DESIGN ASSUMES 16" O.C MAX. STUD SPACING, U.N.O.
- ALL STRUCTURAL PANELS ARE TO BE DIRECTLY APPLIED TO STUD FRAMING.
- PRE-MANUFACTURED PANELIZED WALLS: FASTEN TOGETHER END STUDS OF WALL PANELS SHEATHED w/ OSB OR PLYWOOD w/ 3" x 0.120" NAILS @ 4" O.C. (THRU ONE SIDE ONLY)

— — — INDICATES EXTENT OF INT. OSB SHEARWALL OR 3" O.C. OSB SHEARWALL.

▶ INDICATES HOLDOWN BELOW

GENERAL STRUCTURAL NOTES

FOUNDATION

- DESIGN IS BASED ON 2018 NORTH CAROLINA STATE BUILDING CODE: RESIDENTIAL CODE.
- FOOTING DESIGN - 2,000 PSF ALLOWABLE SOIL BEARING PRESSURE IS ASSUMED. BUILDER/CONTRACTOR MUST VERIFY.
- FASTEN 2x4/6 SILL PLATES TO FND WITH A MINIMUM OF 2 ANCHORS PER PLATE, 12" MAX. FROM PLATE ENDS - UTILIZING:
  - 1/2" DIA. ANCHOR BOLTS @ 6'-0" O.C, 7" MIN. EMBEDMENT (CONC), 15" MIN. EMBEDMENT (CMU)
  - SIMPSON MASA ANCHOR STRAPS @ 6'-0" O.C. (CONC)
  - SIMPSON MAB23 ANCHOR STRAPS @ 2'-8" O.C. (CMU)
  (REFER TO DETAILS FOR 10' TALL WALL ANCHOR REQUIREMENTS)
- ALL LUMBER EXPOSED TO WEATHER OR IN CONTACT W/ CONCRETE OR CMU SHALL BE PRESERVATIVE TREATED SOUTHERN PINE #2.
- BUILDER TO VERIFY CORROSION-RESISTANCE COMPATIBILITY OF HARDWARE & FASTENERS IN CONTACT w/ PRESERVATIVE-TREATED WOOD. CONTACT LUMBER & HARDWARE SUPPLIERS TO COORD.
- BASEMENT INTERIOR BEARING WALLS & EXTERIOR WALK-OUT BASEMENT WALLS SHALL BE 2x6 @ 16" O.C. SPF OR SYP, "STUD" GRADE OR BETTER.
- CONCRETE DESIGN BASED ON ACI 318. CONCRETE SHALL ATTAIN THE FOLLOWING MIN. COMPRESSIVE STRENGTHS IN 28 DAYS, U.N.O.:
  f'c = 4,000 psi: .... FOUNDATION WALLS
  2,500 psi: .... FOOTINGS & INTERIOR SLABS ON GRADE
  3,000 psi: .... GARAGE & EXTERIOR SLABS ON GRADE
  fy = 60,000 psi
- BASEMENT FOUNDATION WALL DESIGN BASED ON:
  - 9' OR 10' HEIGHT (AS NOTED ON PLANS)
    - TALLER WALLS MUST BE ENGINEERED.
  - NOMINAL WIDTH (9 ½" FOR 10" THICK WALL).
- BASEMENT WALL DESIGN IS BASED ON 60 PCF BACKFILL SOIL TYPE CLASSIFICATIONS (SC, ML-CL, OR CL).
- BASEMENT WALLS SHALL BE BRACED, PRIOR TO BACKFILLING, BY ADEQUATE TEMPORARY BRACING OR INSTALL 1st FLOOR DECK.
- PROVIDE (2) #5 BARS AROUND ALL SIDES OF OPENINGS IN CONCRETE BSMT. FND. WALL WITH 2" CLEAR. REINFORCEMENT SHALL EXTEND 12" PAST CORNER OF OPENING IN ALL DIRECTIONS.
  - FOR OPENINGS UP TO 36", PROVIDE MINIMUM 10" CONCRETE DEPTH OVER OPENING OR (3)2x10 w/ (2)2x6 JACK STUDS, U.N.O.
  - LARGER OPENINGS SHALL BE PER PLAN.
- ALL CONCRETE EXPOSED TO THE WEATHER SHALL NOT HAVE LESS THAN 5% OR MORE THAN 7% AIR ENTRAINMENT.
- ALL FOOTINGS SHALL BEAR AT LEAST 12" BELOW FINISH GRADE.
- FOOTINGS AND SLABS ON GRADE SHALL BEAR ON VIRGIN SOIL OR 95% COMPACTED FILL.
- PROVIDE CONTROL JOINTS AT ALL INSIDE CORNERS OF SLAB EDGES, AND OTHER LOCATIONS WHERE SLAB CRACKS ARE LIKELY TO DEVELOP.
  - JOINTS SHALL BE LOCATED @ 10'-0" O.C. (RECOMMENDED) OR 15'-0" O.C. (MAXIMUM)
  - JOINT GRID PATTERN SHALL BE AS CLOSE TO SQUARES AS POSSIBLE (1:1 RATIO), WITH A MAXIMUM OF 1:1.5 RATIO
  - CONTROL JOINTS SHALL NOT BE INSTALLED IN STRUCTURAL SLABS
- CONCRETE MASONRY UNITS (CMU) SHALL BE ASTM C90 WITH A MIN. COMPRESSIVE STRENGTH OF 1900 psi (F'm=1500 psi). MORTAR SHALL BE ASTM C270, TYPE S. CMU DESIGN PER ACI 530 & 530.1.
- CMU FOUNDATION WALLS SHALL HAVE 'DUR-O-WALL' HORIZONTAL JOINT REINFORCEMENT (OR EQUAL) - 9 GA. MINIMUM @ 16" O.C.
- PROVIDE 2x8 x 16" LONG P.T. PLATE ON TOP OF ALL CRAWL SPACE PIERS. ALL PIERS SHALL BE GROUTED SOLID.
- PROVIDE 2x6 P.T. PLATE ON INTERIOR CRAWL SPACE WALLS, FASTENED PER ANCHORAGE SPECIFICATION NOTED ABOVE.
- DIMENSIONS BY OTHERS, BUILDER TO VERIFY.
- BUILDER TO VERIFY THAT MODEL HAS BEEN ADEQUATELY TREATED BY A LICENSED AND BONDED PEST CONTROL COMPANY FOR SUBTERRANEAN TERMITES. METHOD AND TYPE OF TREATMENT TO BE DETERMINED BY PEST CONTROL COMPANY.

HOLD-DOWN SCHEDULE

SYMBOL	SPECIFICATION
▶ HD-1	SIMPSON HTT4 HOLD-DOWN * (⅝" DIA. ANCHOR)
▶ HD-2	SIMPSON MSTC66 STRAP TIE (CENTER STRAP ON FLOOR SYSTEM U.N.O.) -OR- MSTC66B3 ALTERNATE
▶ HD-3	SIMPSON STHD14/STHD14RJ

* UTILIZE THE SSTB24 ANCHOR BOLT @ ALL MONOSLAB & INTERIOR RAISED SLAB (I.E. THICKENED SLABS, FOOTINGS) CONDITIONS. MINIMUM 24" MIN. FOOTING THICKNESS REQUIRED.
EPOXY-SET ALTERNATE FOR MONOSLAB & INTERIOR RAISED SLAB CONDITIONS ONLY: UTILIZE SIMPSON 'SET' EPOXY SYSTEM TO FASTEN THREADED ROD INTO CONCRETE FOUNDATION. PROVIDE 10" (FOR 5/8" DIA.) OR 15" (FOR 7/8" DIA.) MIN. EMBEDMENT INTO CONCRETE.
INSTALL PER MANUF. INSTRUCTIONS. MINIMUM 16" FOOTING THICKNESS REQ'D.
DO NOT LOCATE ANCHORS WITHIN 1 3/4" OF EDGE OF CONCRETE.

seal: 3/20/25

NORTH CAROLINA PROFESSIONAL ENGINEER SEAL 036012 JOSEPH T. RICKER

© Copyright: MULHERN & KULP Structural Engineering, Inc.

MULHERN+KULP
RESIDENTIAL STRUCTURAL ENGINEERING
300 Brookside Ave, Building 4 ▸ Ambler, PA 19002
p 215-646-8001 ▸ mulhernkulp.com
NC LICENSE #C-3825

M&K project number: 126-24045
project mgr: JTR
drawn by: JAD
issue date: 03-19-25
REVISIONS:

DRB HOMES

STRUCTURAL NOTES
CAMPBELL RIDGE
LOT 23 - STONEHAVEN 1
RALEIGH, NC

sheet: S0.0

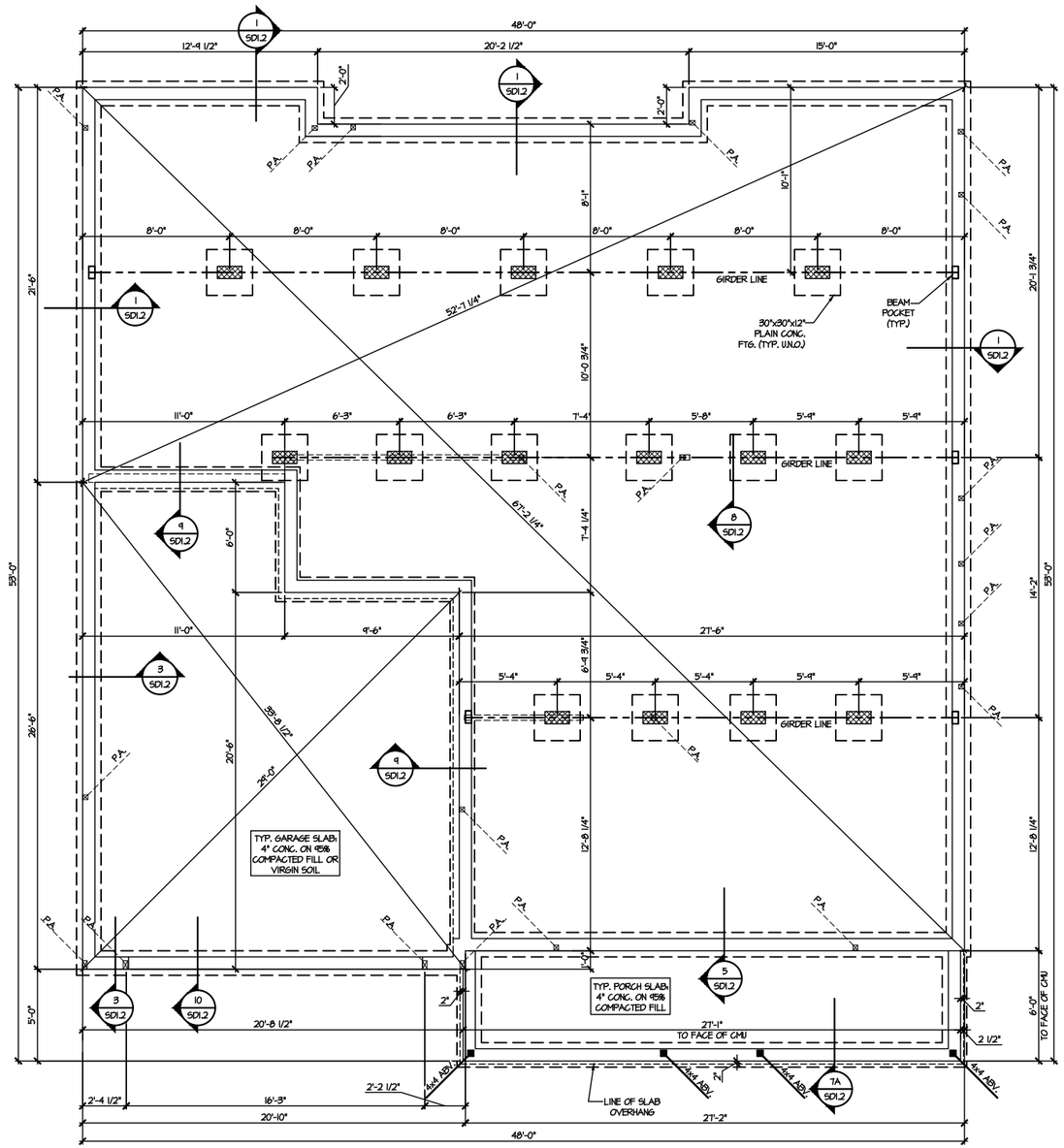

1 CRAWL SPACE FOUNDATION PLAN

SCALE: 1/8"=1'-0"

LEGEND

- INTERIOR BEARING WALL
- BEARING WALL ABOVE
- BEAM / HEADER
- INDICATES SHEAR WALL & EXTENT
- EXTENT OF OVERFRAMING
- METAL HANGER
- * INDICATES POST ABOVE. PROVIDE SOLID BLOCKING UNDER POST OR JAMB ABOVE.
- INDICATES HOLD-DOWN OR STRAP. REFER TO SCHEDULE.

REFER TO S0.0 FOR TYPICAL STRUCTURAL NOTES & SCHEDULES

seal: 3/20/25

NORTH CAROLINA PROFESSIONAL SEAL 036012 ENGINEER JOSEPH T. RICKER

© Copyright : MULHERN & KULP Structural Engineering, Inc.

MULHERN+KULP
RESIDENTIAL STRUCTURAL ENGINEERING
5830 Beaverdale Ave, Building 4 • Pittsburgh, PA 15202
p 215-646-5800 • mulhern-kulp.com
NC LICENSE #C-3825

M&K project number: 126-24045

project mgr: JTR
drawn by: JAD
issue date: 03-19-25

REVISIONS:

DRB HOMES

FOUNDATION PLANS
CAMPBELL RIDGE
LOT 23 - STONEHAVEN 1
RALEIGH, NC

sheet: S1.0

FILE: RLH - Campbell Ridge - Lot 23 - Structurals DATE: 3/20/2025 10:17 AM

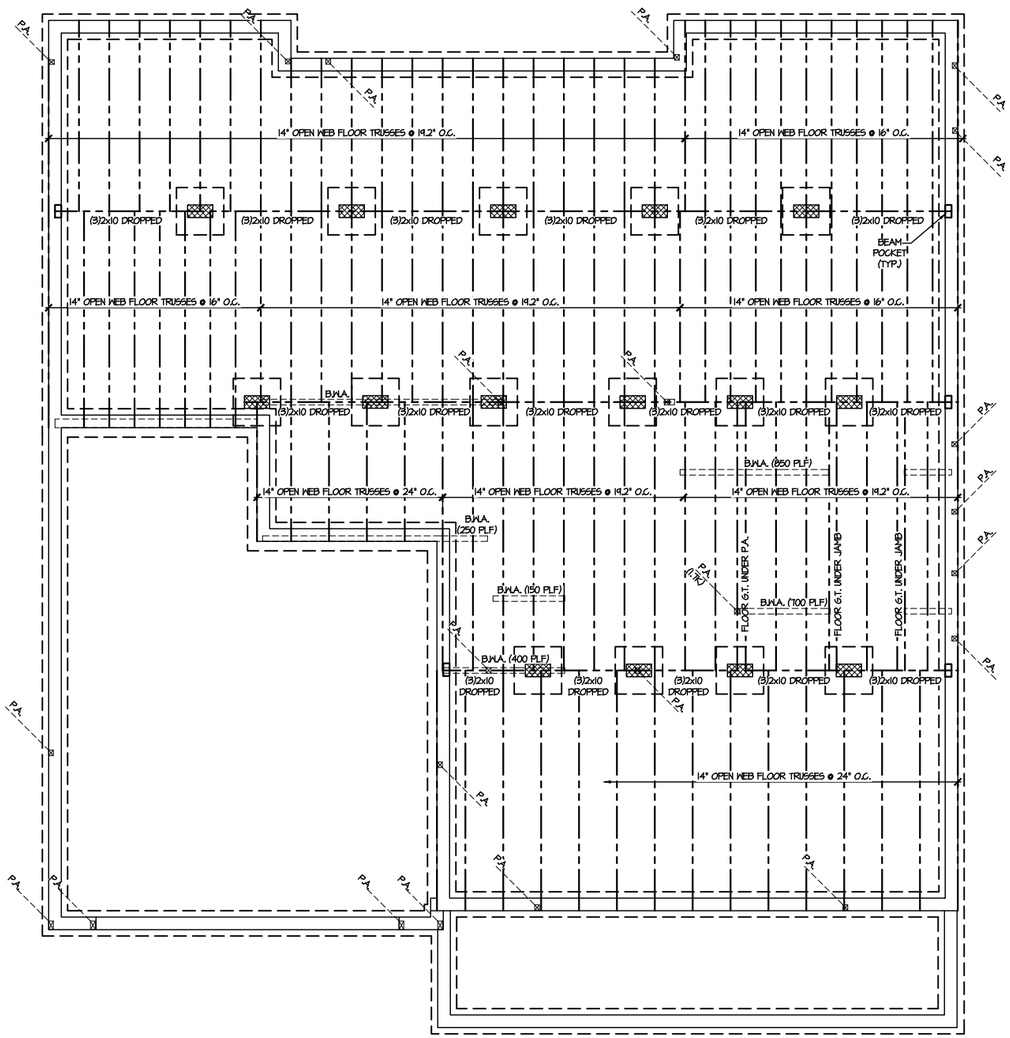

1 1ST FLOOR FRAMING PLAN

SCALE: 1/8"=1'-0"

ENGINEERED BEAM MATERIAL SCHEDULE

BEAM NUMBER	LVL OPTION	PSL OPTION	LSL OPTION	FLITCH OPTION	STEEL OPTION
001	(2)1¾"x14 1/4" - F	3½"x14 1/4" - F	N/A	(2)2x10 + (1) 1/4"x9¼" STEEL FLITCH PLATES - F	W8x10 - F
002	(2)1¾"x18" - FB	3½"x18" - FB	N/A	(2)2x12 + (1) 1"x11¾" STEEL FLITCH PLATES - F	W12x19 - F
002A	(3)1¾"x16" - FB	5¼"x16" - FB	N/A	(3)2x12 + (2) ½"x11¾" STEEL FLITCH PLATES - F	W12x19 - F
003	(2)1¾"x14" - F	3½"x14" - F	(2)1¾"x14" - F	(2)2x12 + (1) 1/4"x11¾" STEEL FLITCH PLATES - F	W12x14 - F
004	(2)1¾"x14" - F	3½"x14" - F	(3)1¾"x14" - F	(2)2x12 + (1) ⅜"x11¾" STEEL FLITCH PLATES - F	W12x14 - F
005	(4)1¾"x18" - D	7"x18" - D	N/A	(4)2x12 + (3) ⅜"x11¾" STEEL FLITCH PLATES - D	W12x30 - D
006	(2)1¾"x11⅞" - H	3½"x11⅞" - H	(3)1¾"x11⅞" - H	N/A	N/A
007	(2)1¾"x14" - H	3½"x14" - H	(3)1¾"x14" - H	(2)2x12 + (1) ⅜"x11¾" STEEL FLITCH PLATES - H	N/A
008	(3)1¾"x14" - F	5¼"x14" - F	N/A	(3)2x10 + (2) 1/4"x11¾" STEEL FLITCH PLATES - F	W12x14 - F
009	(3)1¾"x18" - H	5¼"x18" - H	N/A	(3)2x12 + (2) ½"x11¾" STEEL FLITCH PLATES - H	N/A
010	(2)1¾"x9¼" - H	3½"x9¼" - H	(2)1¾"x9¼" - H	(2)2x10 + (1) 1/4"x9¼" STEEL FLITCH PLATES - H	W8x10 - H
011	(3)1¾"x9¼" - F	5¼"x9¼" - F	(3)1¾"x9¼" - F	(3)2x10 + (2) 1/4"x11¾" STEEL FLITCH PLATES - F	W8x10 - F
012	(4)1¾"x11⅞" - D	7"x11⅞" - D	N/A	(4)2x12 + (3) 1/4"x11¾" STEEL FLITCH PLATES - D	W12x14 - D
013	(3)1¾"x16" - FT	5¼"x16" - FT	N/A	(3)2x12 + (2) ½"x11¾" STEEL FLITCH PLATES - F	W12x19 - F
014	(2)1¾"x14" - F	3½"x14" - F	(3)1¾"x14" - F	(2)2x12 + (1) ⅜"x11¾" STEEL FLITCH PLATES - F	W12x14 - F

- BEAM NOTATION:
  - "F" INDICATES FLUSH BEAM
  - "FT" INDICATES FLUSH TOP BEAM
  - "FB" INDICATES FLUSH BOTTOM BEAM
  - "D" INDICATES DROPPED BEAM
  - "H" INDICATES DROPPED OPENING HEADER
- REFER TO DETAIL D/SD2.0 FOR TYPICAL FLITCH BEAM CONNECTIONS
- REFER TO DETAIL E/SD2.0 FOR TYPICAL STEEL BEAM CONNECTIONS
- FOR FLUSH TOP BEAMS PROVIDE 2X STACKED PLATES BENEATH BEAM AS REQ'D. FASTEN PLATES IN SUCCESSION W/ (2) 3"X0.120" NAILS @ 8" O.C.
- FOR FLUSH BOTTOM BEAMS PROVIDE 2x STACKED PLATES ATOP BEAM AS REQ'D. FASTEN PLATES IN SUCCESSION w/ (2) 3"x0.120" NAILS @ 8" O.C.

SD2.1 REFERS TO SD2.1A FOR LVL/PSL/LSL BEAMS OR SD2.1B FOR FLITCH BEAMS OR SD2.1C FOR STEEL BEAMS

LEGEND

- INTERIOR BEARING WALL
- BEARING WALL ABOVE
- BEAM / HEADER
- INDICATES SHEAR WALL & EXTENT
- EXTENT OF OVERFRAMING
- METAL HANGER
- * INDICATES POST ABOVE. PROVIDE SOLID BLOCKING UNDER POST OR JAMB ABOVE.
- INDICATES HOLD-DOWN OR STRAP. REFER TO SCHEDULE.

REFER TO S0.0 FOR TYPICAL STRUCTURAL NOTES & SCHEDULES

seal: 3/20/25

NORTH CAROLINA PROFESSIONAL SEAL 036012 ENGINEER JOSEPH T. RICKER

© Copyright : MULHERN & KULP Structural Engineering, Inc.

MULHERN+KULP
RESIDENTIAL STRUCTURAL ENGINEERING
5030 Brandywine Ave, Building 4 • Portland, PA 18702
p:215-646-5200 • mulhern-kulp.com
NC LICENSE #C-3825

M&K project number: 126-24045

project mgr: JTR
drawn by: JAD
issue date: 03-19-25

REVISIONS:

DRB HOMES

FLOOR FRAMING PLANS

CAMPBELL RIDGE
LOT 23 - STONEHAVEN 1
RALEIGH, NC

sheet: S2.0

FILE: RLH - Campbell Ridge - Lot 23 - Structurals DATE: 3/20/2025 10:17 AM

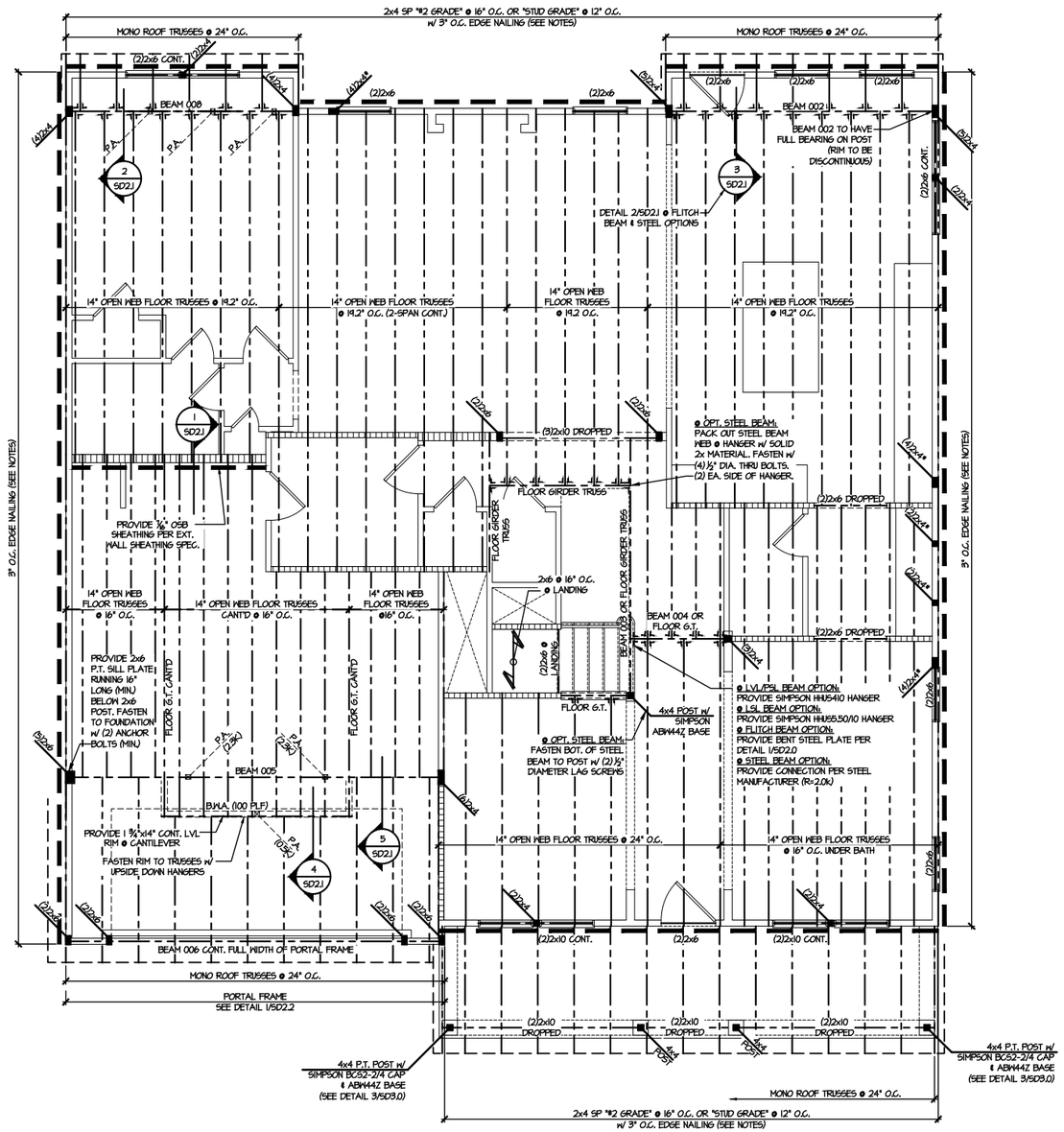

1 2ND FLOOR FRAMING PLAN
SCALE: 1/8"=1'-0"

ENGINEERED BEAM MATERIAL SCHEDULE

BEAM NUMBER	LVL OPTION	PSL OPTION	LSL OPTION	FLITCH OPTION	STEEL OPTION
001	(2)1¾"x9 ¼" - F	3½"x9 ¼" - F	N/A	(2)2x10 + (1) ¼"x9¼" STEEL FLITCH PLATES - F	W8x10 - F
002	(2)1¾"x18" - FB	3½"x18" - FB	N/A	(2)2x12 + (1) 1"x11¼" STEEL FLITCH PLATES - F	W12x19 - F
002A	(3)1¾"x16" - FB	5¼"x16" - FB	N/A	(3)2x12 + (2) ½"x11¼" STEEL FLITCH PLATES - F	W12x19 - F
003	(2)1¾"x14" - F	3½"x14" - F	(2)1¾"x14" - F	(2)2x12 + (1) ¼"x11¼" STEEL FLITCH PLATES - F	W12x14 - F
004	(2)1¾"x14" - F	3½"x14" - F	(3)1¾"x14" - F	(2)2x12 + (1) ⅜"x11¼" STEEL FLITCH PLATES - F	W12x14 - F
005	(4)1¾"x18" - D	7"x18" - D	N/A	(4)2x12 + (3) ⅜"x11¼" STEEL FLITCH PLATES - D	W12x30 - D
006	(2)1¾"x11⅞" - H	3½"x11⅞" - H	(3)1¾"x11⅞" - H	N/A	N/A
007	(2)1¾"x14" - H	3½"x14" - H	(3)1¾"x14" - H	(2)2x12 + (1) ⅜"x11¼" STEEL FLITCH PLATES - H	N/A
008	(3)1¾"x14" - F	5¼"x14" - F	N/A	(3)2x10 + (2) ¼"x11¼" STEEL FLITCH PLATES - F	W12x14 - F
009	(3)1¾"x18" - H	5¼"x18" - H	N/A	(3)2x12 + (2) ½"x11¼" STEEL FLITCH PLATES - H	N/A
010	(2)1¾"x9¼" - H	3½"x9¼" - H	(2)1¾"x9¼" - H	(2)2x10 + (1) ¼"x9¼" STEEL FLITCH PLATES - H	W8x10 - H
011	(3)1¾"x9¼" - F	5¼"x9¼" - F	(3)1¾"x9¼" - F	(3)2x10 + (2) ¼"x11¼" STEEL FLITCH PLATES - F	W8x10 - F
012	(4)1¾"x11⅞" - D	7"x11⅞" - D	N/A	(4)2x12 + (3) ¼"x11¼" STEEL FLITCH PLATES - D	W12x14 - D
013	(3)1¾"x16" - FT	5¼"x16" - FT	N/A	(3)2x12 + (2) ½"x11¼" STEEL FLITCH PLATES - F	W12x19 - F
014	(2)1¾"x14" - F	3½"x14" - F	(3)1¾"x14" - F	(2)2x12 + (1) ⅜"x11¼" STEEL FLITCH PLATES - F	W12x14 - F

- BEAM NOTATION:
  - "F" INDICATES FLUSH BEAM
  - "FT" INDICATES FLUSH TOP BEAM
  - "FB" INDICATES FLUSH BOTTOM BEAM
  - "D" INDICATES DROPPED BEAM
  - "H" INDICATES DROPPED OPENING HEADER
- REFER TO DETAIL D/SD2.0 FOR TYPICAL FLITCH BEAM CONNECTIONS
- REFER TO DETAIL E/SD2.0 FOR TYPICAL STEEL BEAM CONNECTIONS
- FOR FLUSH TOP BEAMS PROVIDE 2X STACKED PLATES BENEATH BEAM AS REQ'D. FASTEN PLATES IN SUCCESSION W/ (2) 3"X0.120" NAILS @ 8" O.C.
- FOR FLUSH BOTTOM BEAMS PROVIDE 2x STACKED PLATES ATOP BEAM AS REQ'D. FASTEN PLATES IN SUCCESSION w/ (2) 3"x0.120" NAILS @ 8" O.C.

SD2.1 REFERS TO SD2.1A FOR LVL/PSL/LSL BEAMS OR SD2.1B FOR FLITCH BEAMS OR SD2.1C FOR STEEL BEAMS

LEGEND

- INTERIOR BEARING WALL
- BEARING WALL ABOVE
- BEAM / HEADER
- INDICATES SHEAR WALL & EXTENT
- EXTENT OF OVERFRAMING
- METAL HANGER
- * INDICATES POST ABOVE. PROVIDE SOLID BLOCKING UNDER POST OR JAMB ABOVE.
- INDICATES HOLD-DOWN OR STRAP. REFER TO SCHEDULE.

REFER TO S0.0 FOR TYPICAL STRUCTURAL NOTES & SCHEDULES

seal: 3/20/25

NORTH CAROLINA PROFESSIONAL SEAL 036012 ENGINEER JOSEPH T. RICKER

© Copyright : MULHERN & KULP Structural Engineering, Inc.

MULHERN+KULP
RESIDENTIAL STRUCTURAL ENGINEERING
5030 Brookside Ave, Building 4 • Pottstown, PA 19465
p: 215-646-0200 • mulhern-kulp.com
NC LICENSE #C-3825

M&K project number: 126-24045

project mgr: JTR
drawn by: JAD
issue date: 03-19-25

REVISIONS:

DR HOMES

FLOOR FRAMING PLANS

CAMPBELL RIDGE
LOT 23 - STONEHAVEN 1
RALEIGH, NC

sheet: S3.0

FILE: RLH - Campbell Ridge - Lot 23 - Structurals DATE: 3/20/2025 10:17 AM

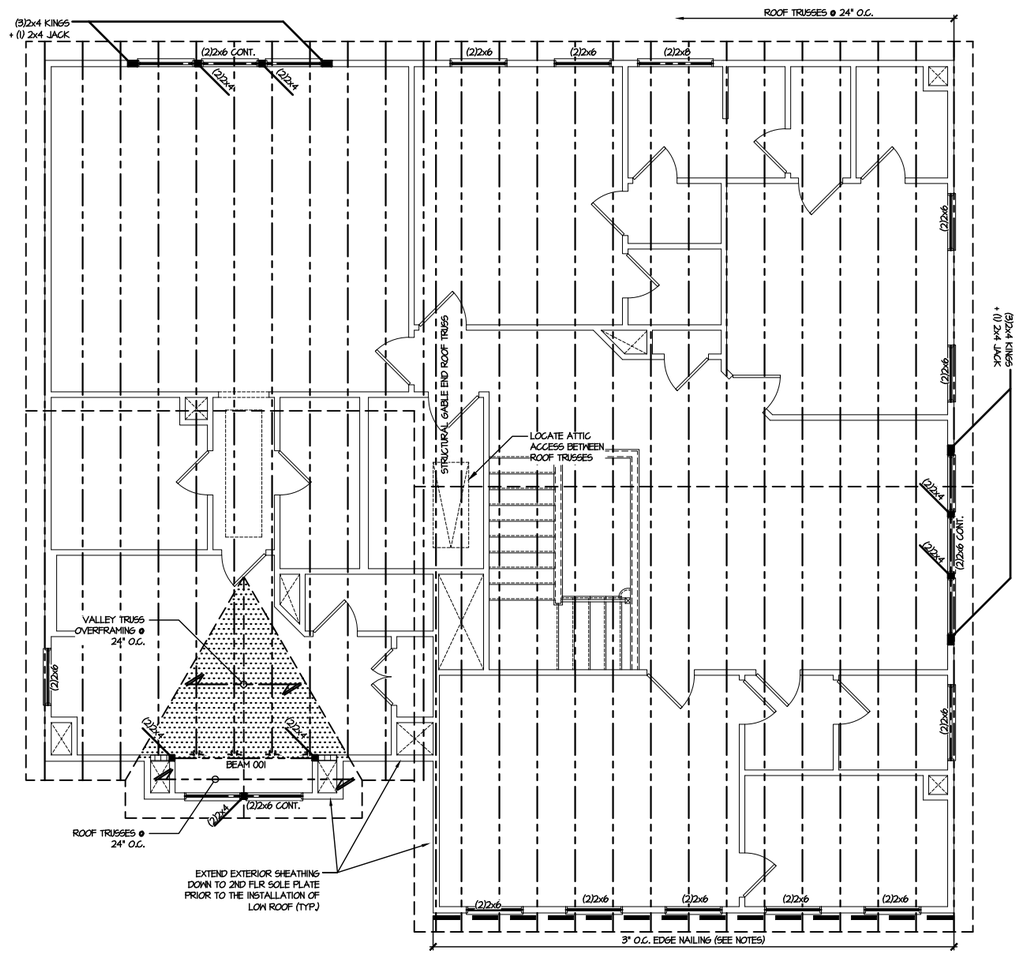

1 ROOF FRAMING PLAN
SCALE: 1/8"=1'-0"

LEGEND

- INTERIOR BEARING WALL
- BEARING WALL ABOVE
- BEAM / HEADER
- INDICATES SHEAR WALL & EXTENT
- EXTENT OF OVERFRAMING
- METAL HANGER
- * INDICATES POST ABOVE. PROVIDE SOLID BLOCKING UNDER POST OR JAMB ABOVE.
- INDICATES HOLD-DOWN OR STRAP. REFER TO SCHEDULE.

REFER TO S0.0 FOR TYPICAL STRUCTURAL NOTES & SCHEDULES

seal: 3/20/25

NORTH CAROLINA PROFESSIONAL SEAL 036012 ENGINEER JOSEPH T. RICKER

© Copyright : MULHERN & KULP Structural Engineering, Inc.

MULHERN+KULP
RESIDENTIAL STRUCTURAL ENGINEERING
5030 Brookside Ave, Building 4 • Jeffersonville, PA 19403
p 215-646-0200 • mulhern-kulp.com
NC LICENSE #C-3825

M&K project number: 126-24045

project mgr: JTR
drawn by: JAD
issue date: 03-19-25

REVISIONS:

DRB HOMES

ROOF FRAMING PLANS

CAMPBELL RIDGE
LOT 23 - STONEHAVEN 1
RALEIGH, NC

sheet: S4.0

FILE: RLH - Campbell Ridge - Lot 23 - Structurals DATE: 3/20/2025 10:18 AM

LETTERED DETAILS ARE TYPICAL FOR THIS HOME & SHALL BE IMPLEMENTED IN ALL APPLICABLE AREAS. THESE DETAILS ARE NOT "CUT" ON THE PLANS.

NUMBERED DETAILS ARE PLAN SPECIFIC AND ARE ONLY REQUIRED WHERE SPECIFICALLY INDICATED ("CUT") ON THE PLANS.

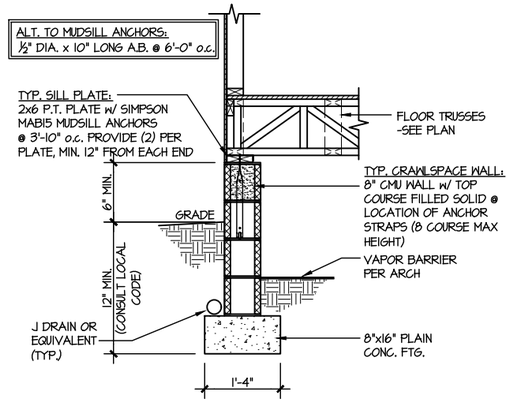

1 TYPICAL CRAWLSPACE FOUNDATION
SCALE: 3/8"=1'-0"

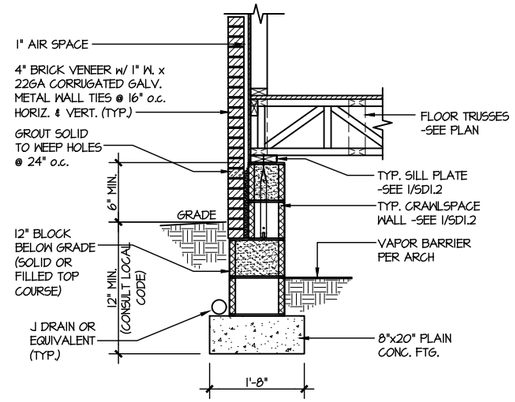

2 TYPICAL CRAWLSPACE FOUNDATION
SCALE: 3/8"=1'-0" w/ BRICK VENEER

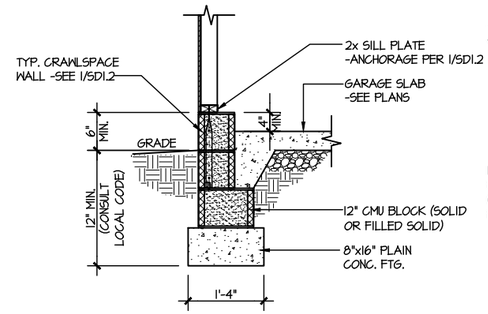

3 TYPICAL GARAGE FOUNDATION
SCALE: 3/8"=1'-0"

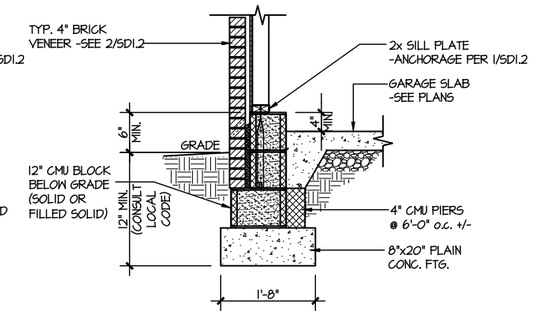

4 TYPICAL GARAGE FOUNDATION
SCALE: 3/8"=1'-0" w/ BRICK VENEER

PLAIN CONC. FOOTINGS AS DIMENSIONED & SHOWN ARE MINIMUM SIZES REQUIRED & HAVE BEEN ENGINEERED. ADDITION OF CONTINUOUS REBAR OR LARGER FOOTINGS MAY BE PROVIDED AT THE DISCRETION OF THE BUILDER.

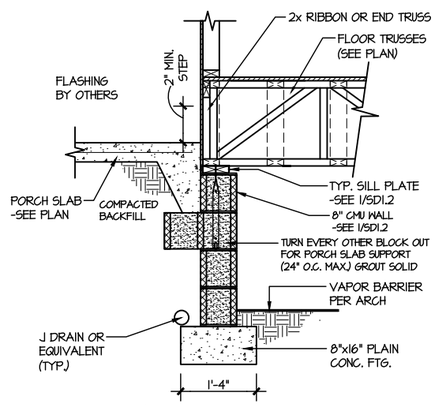

5 TYPICAL CRAWLSPACE FOUNDATION @ PORCH/PATIO SLAB
SCALE: 3/8"=1'-0"
(REFER TO DETAIL 12 FOR WOOD PORCH OPTION)

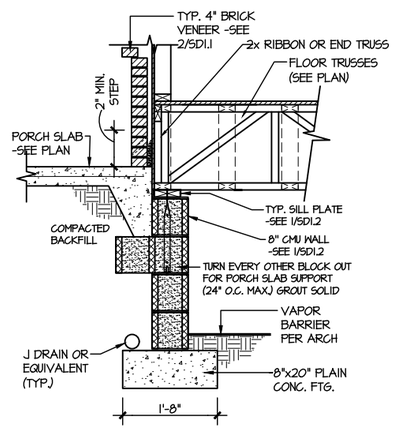

6 TYPICAL CRAWLSPACE FOUNDATION @ PORCH/PATIO SLAB
SCALE: 3/8"=1'-0" w/ BRICK VENEER

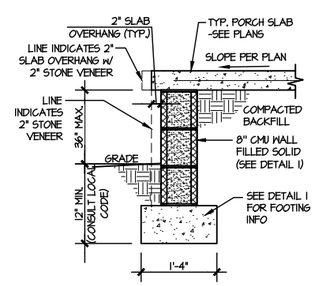

7A TYP. FOOTING @ PORCH SLAB
SCALE: 3/8"=1'-0"

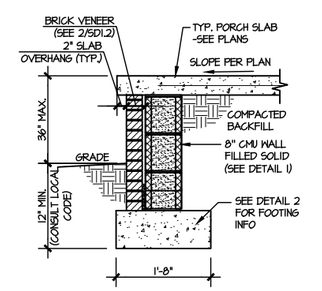

7B TYP. FOOTING @ PORCH SLAB
SCALE: 3/8"=1'-0" w/ BRICK VENEER

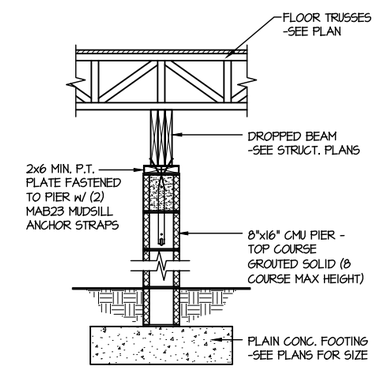

8 TYPICAL CRAWLSPACE FND. @ INTERIOR PIER
SCALE: 3/8"=1'-0"

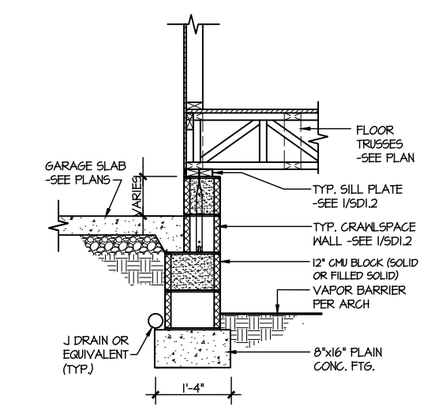

9 TYPICAL CRAWLSPACE FOUNDATION @ GARAGE
SCALE: 3/8"=1'-0"

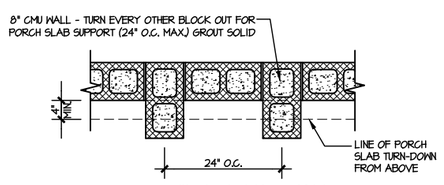

TOP VIEW OF FND. WALL @ PORCH SLAB SUPPORT

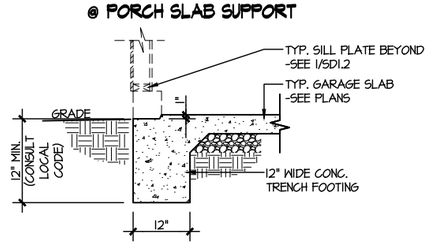

10 TYPICAL SLAB ON GRADE GARAGE ENTRY @ PERIMETER FOOTING
SCALE: 3/8"=1'-0"

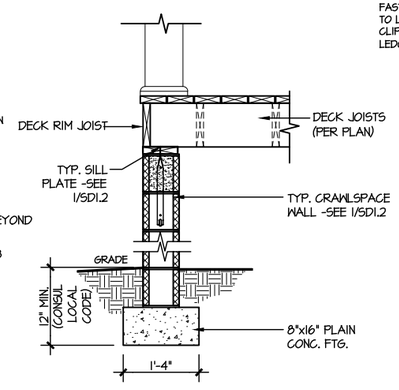

11 TYPICAL CRAWLSPACE FOUNDATION @ WOOD PORCH/DECK PERIMETER
SCALE: 3/8"=1'-0"

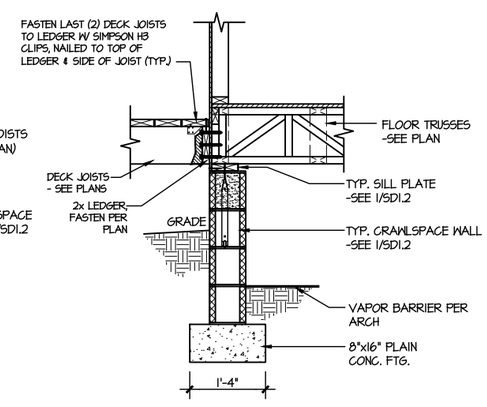

12 TYPICAL CRAWLSPACE FOUNDATION @ WOOD PORCH/DECK
SCALE: 3/8"=1'-0"

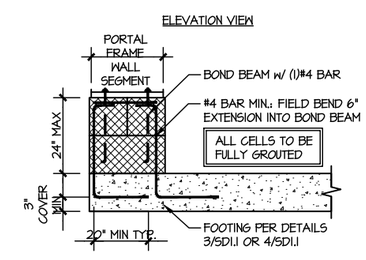

A GARAGE PORTAL FRAME STEM WALL REINFORCEMENT
SCALE: 3/8"=1'-0"

FILE: RLH - Campbell Ridge - Lot 23 - Structurals DATE: 3/20/2025 10:18 AM

seal: 3/20/25

NORTH CAROLINA PROFESSIONAL SEAL 036012 ENGINEER JOSEPH T. RICKER

© Copyright : MULHERN & KULP Structural Engineering, Inc.

MULHERN+KULP
RESIDENTIAL STRUCTURAL ENGINEERING
5500 Brandywine Ave, Building 4 • Pittsburgh, PA 15232
p:216-846-0800 • mulhern-kulp.com
NC LICENSE #C-3825

M&K project number: 126-24045

project mgr: JTR
drawn by: JAD
issue date: 03-19-25

REVISIONS:

DRB HOMES

FOUNDATION DETAILS

CAMPBELL RIDGE
LOT 23 - STONEHAVEN 1
RALEIGH, NC

sheet: SD1.2

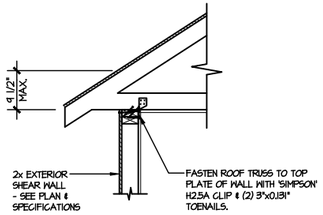

TYPICAL SHEAR TRANSFER DETAIL @ ROOF
A1 SCALE: 3/8"=1'-0" HEEL HEIGHT LESS THAN 4 ½" NO BLOCKING REQ'D

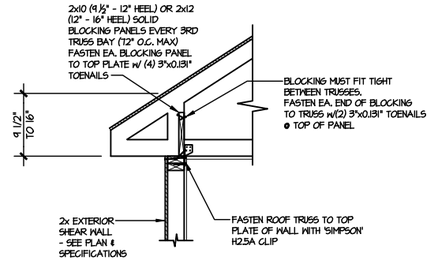

TYPICAL SHEAR TRANSFER DETAIL @ ROOF
A2 SCALE: 3/8"=1'-0" HEEL HEIGHT BETWEEN 9 ½" - 16" BLOCKING REQ'D

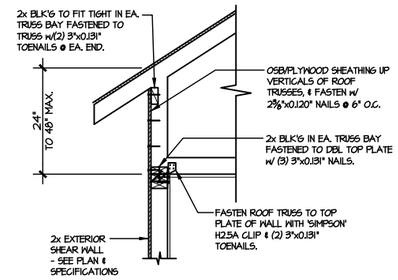

TYPICAL SHEAR TRANSFER DETAIL @ RAISED HEEL TRUSS
A3 SCALE: 3/8"=1'-0" HEEL HEIGHT UP TO 48" MAX.

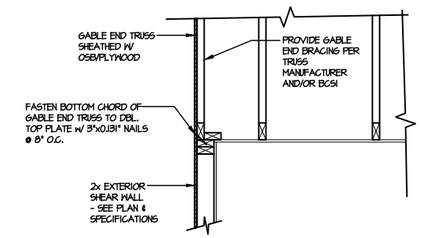

TYPICAL GABLE END DETAIL
B SCALE: 3/8"=1'-0"

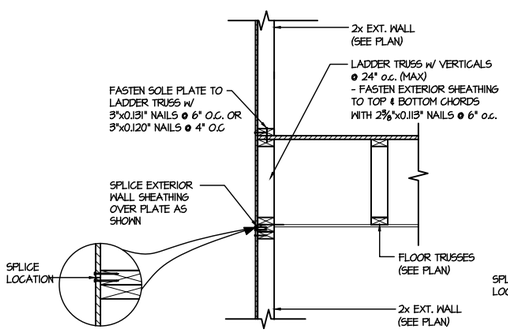

TYPICAL SHEAR TRANSFER DETAIL BETWEEN FLOORS @ EXTERIOR WALL
C1 SCALE: 3/8"=1'-0" PARALLEL FRMG

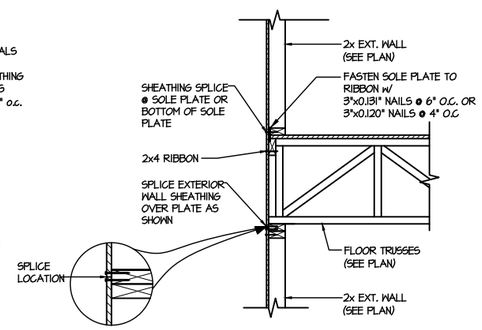

TYPICAL SHEAR TRANSFER DETAIL BETWEEN FLOORS @ EXTERIOR WALL
C2 SCALE: 3/8"=1'-0" PERPENDICULAR FRMG

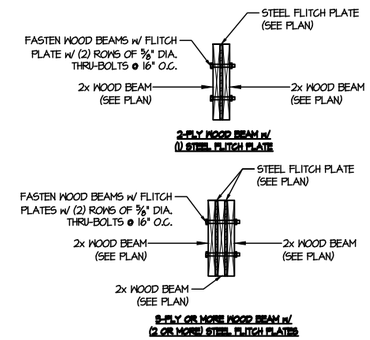

TYPICAL FLITCH BEAM CONNECTION DETAIL
D SCALE: 3/4"=1'-0"

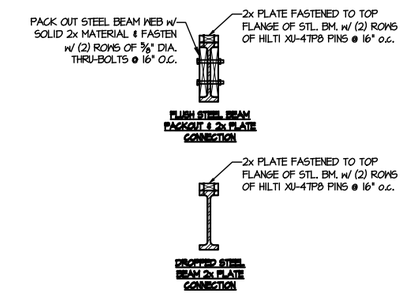

TYPICAL STEEL BEAM CONNECTION DETAIL
E SCALE: 3/4"=1'-0"

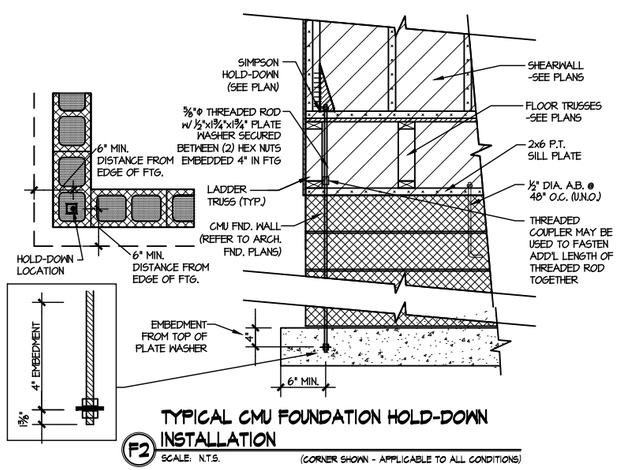

TYPICAL CMU FOUNDATION HOLD-DOWN INSTALLATION
F2 SCALE: N.T.S. (CORNER SHOWN - APPLICABLE TO ALL CONDITIONS)

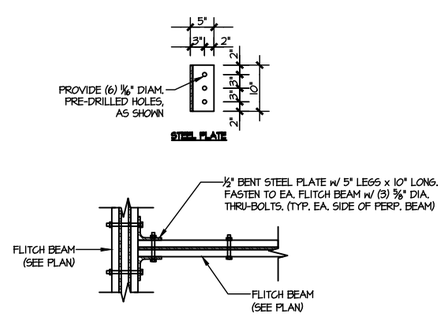

TYPICAL FLITCH BEAM TO FLITCH BEAM CONNECTION DETAIL
1 SCALE: 3/4"=1'-0"

LETTERED DETAILS ARE TYPICAL FOR THIS HOME & SHALL BE IMPLEMENTED IN ALL APPLICABLE AREAS. THESE DETAILS ARE NOT "CUT" ON THE PLANS.	NUMBERED DETAILS ARE PLAN SPECIFIC AND ARE ONLY REQUIRED WHERE SPECIFICALLY INDICATED ("CUT") ON THE PLANS.

seal: 3/20/25

NORTH CAROLINA PROFESSIONAL SEAL 036012 ENGINEER JOSEPH T. RICKER

© Copyright : MULHERN & KULP Structural Engineering, Inc.

MULHERN+KULP
RESIDENTIAL STRUCTURAL ENGINEERING
5030 Brookside Ave, Building 4 • Pottstown, PA 19464
p:215-646-5800 • mulhern-kulp.com
NC LICENSE #C-3825

M&K project number: 126-24045

project mgr: JTR
drawn by: JAD
issue date: 03-19-25

REVISIONS:

DRB HOMES

FRAMING DETAILS
CAMPBELL RIDGE
LOT 23 - STONEHAVEN 1
RALEIGH, NC

sheet: SD2.0

FILE: RLH - Campbell Ridge - Lot 23 - Structurals DATE: 3/20/2025 10:18 AM

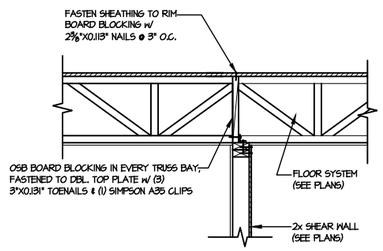

SHEAR TRANSFER DETAIL @ INTERIOR SHEAR WALL
1 SCALE: N.T.S. PERPENDICULAR TO FRAMING

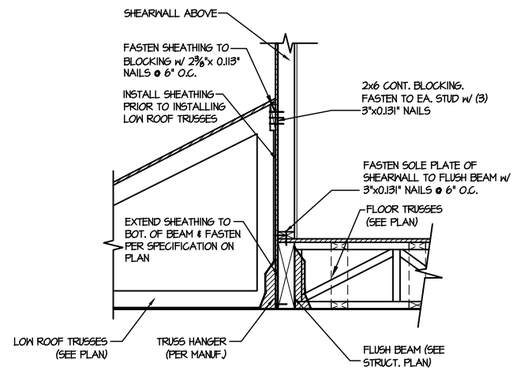

SHEAR TRANSFER DETAIL @ EXTERIOR SHEARWALL ABOVE
2 SCALE: 3/4"=1'-0"

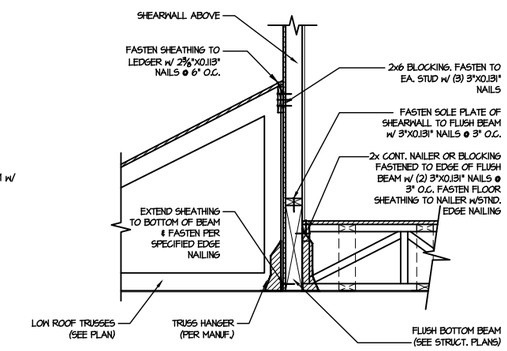

SHEAR TRANSFER DETAIL @ EXTERIOR SHEARWALL ABOVE
3 SCALE: 3/4"=1'-0"

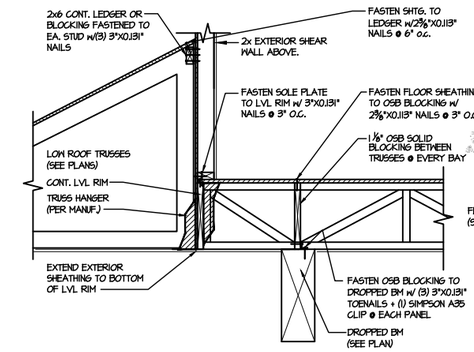

TYPICAL SHEAR TRANSFER DETAIL @ EXTERIOR WALL ABOVE GARAGE
4 SCALE: 3/4"=1'-0"

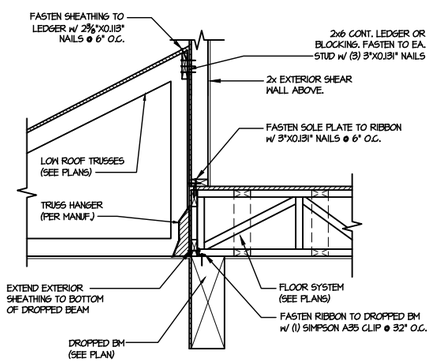

TYPICAL SHEAR TRANSFER DETAIL BETWEEN FLOORS @ INTERIOR WALL
5 SCALE: 3/4"=1'-0"

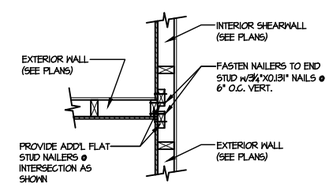

SHEAR TRANSFER DETAIL @ INTERSECTING INT. SHEARWALL
7 SCALE: 3/4"=1'-0" SHTG. ON SAME FACE

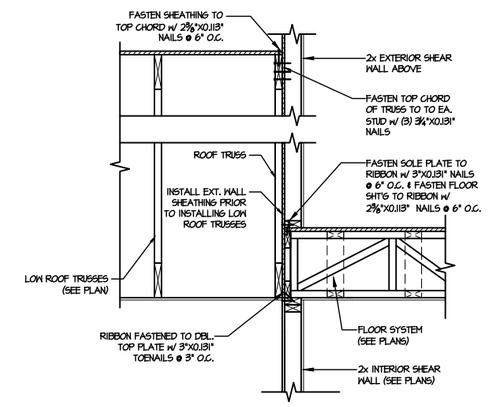

TYPICAL SHEAR TRANSFER DETAIL BETWEEN FLOORS @ INTERIOR WALL
8 SCALE: 3/4"=1'-0"

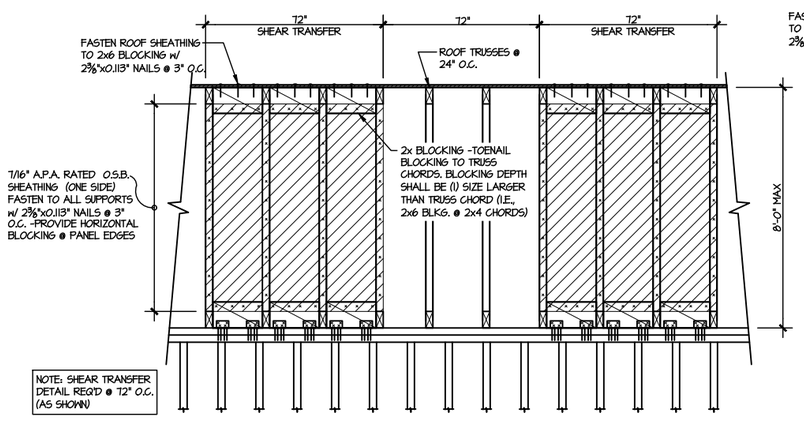

TYPICAL SHEAR TRANSFER DETAIL @ INTERIOR SHEARWALL
X-X SCALE: 3/4"=1'-0"

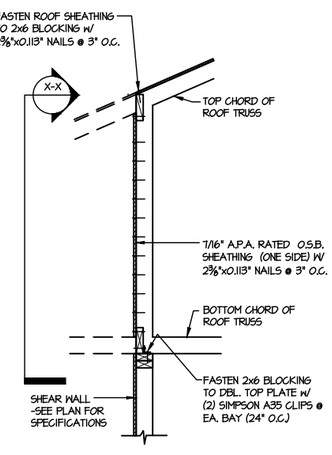

TYPICAL SHEAR TRANSFER DETAIL @ INTERIOR SHEARWALL
9 SCALE: 3/4"=1'-0"

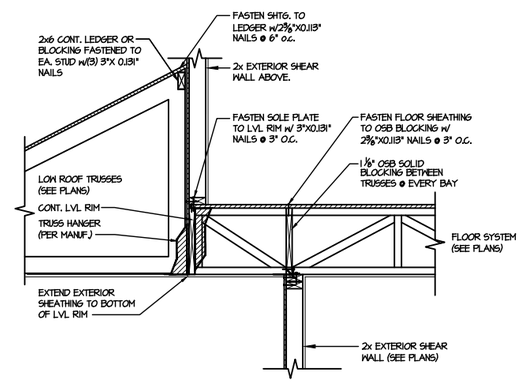

TYPICAL SHEAR TRANSFER DETAIL @ EXTERIOR WALL CANT'D ABOVE
10 SCALE: 3/4"=1'-0"

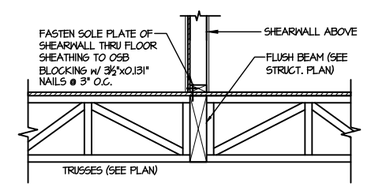

SHEAR TRANSFER DETAIL @ INT. SHEARWALL ABOVE & BELOW
11 SCALE: 3/4"=1'-0" PERPENDICULAR FRAMING

seal: 3/20/25

NORTH CAROLINA PROFESSIONAL SEAL 036012 ENGINEER JOSEPH T. RICKER

© Copyright : MULHERN & KULP Structural Engineering, Inc.

MULHERN+KULP
RESIDENTIAL STRUCTURAL ENGINEERING
5030 Brandywine Ave, Building 4 • Pittsburgh, PA 15232
p: 215-546-5200 • mulhern-kulp.com
NC LICENSE #C-3825

M&K project number: 126-24045

project mgr: JTR
drawn by: JAD
issue date: 03-19-25

REVISIONS:

DRB HOMES

FRAMING DETAILS

CAMPBELL RIDGE
LOT 23 – STONEHAVEN 1
RALEIGH, NC

sheet: SD2.1A

FILE: RLH - Campbell Ridge - Lot 23 - Structurals DATE: 3/20/2025 10:18 AM

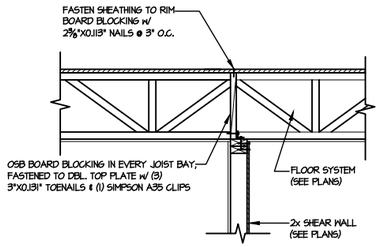

1 SHEAR TRANSFER DETAIL @ INTERIOR SHEAR WALL

SCALE: N.T.S. PERPENDICULAR TO FRAMING

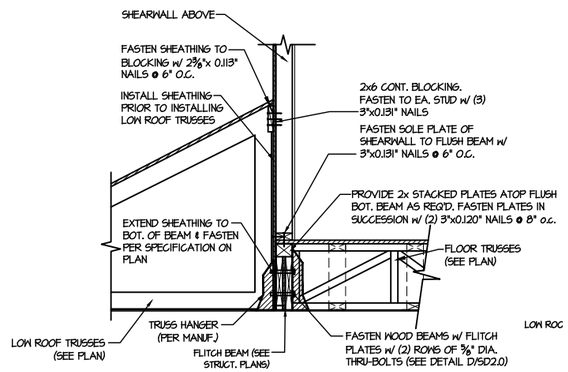

2 SHEAR TRANSFER DETAIL @ EXTERIOR SHEARWALL ABOVE

SCALE: 3/4"=1'-0"

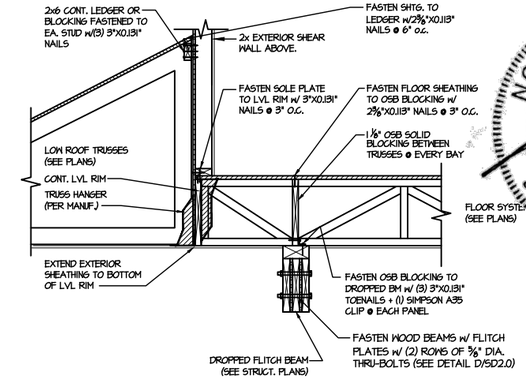

4 TYPICAL SHEAR TRANSFER DETAIL @ EXTERIOR WALL ABOVE GARAGE

SCALE: 3/4"=1'-0"

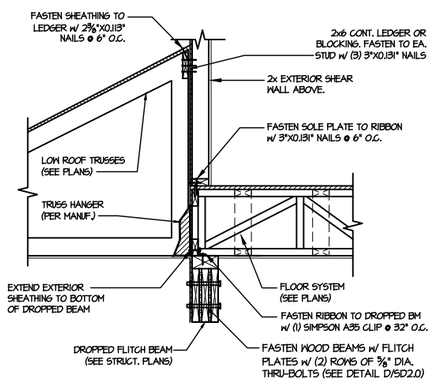

5 TYPICAL SHEAR TRANSFER DETAIL BETWEEN FLOORS @ INTERIOR WALL

SCALE: 3/4"=1'-0"

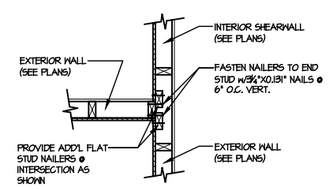

7 SHEAR TRANSFER DETAIL @ INTERSECTING INT. SHEARWALL

SCALE: 3/4"=1'-0" SHTG. ON SAME FACE

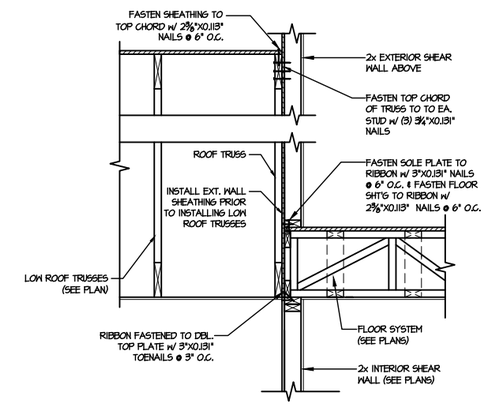

8 TYPICAL SHEAR TRANSFER DETAIL BETWEEN FLOORS @ INTERIOR WALL

SCALE: 3/4"=1'-0"

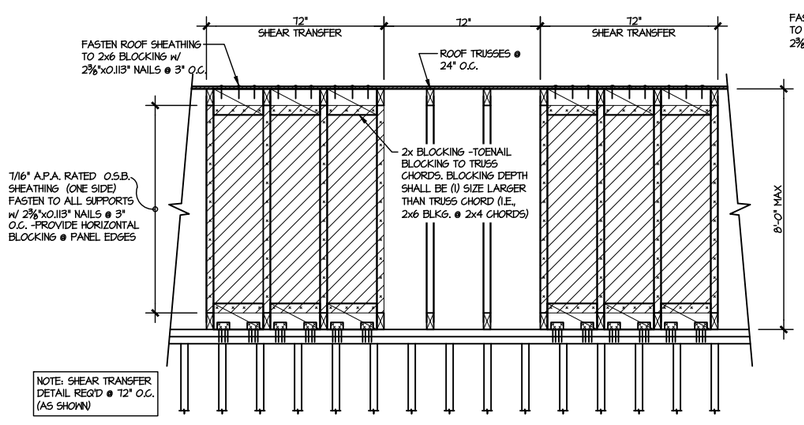

X-X TYPICAL SHEAR TRANSFER DETAIL @ INTERIOR SHEARWALL

SCALE: 3/4"=1'-0"

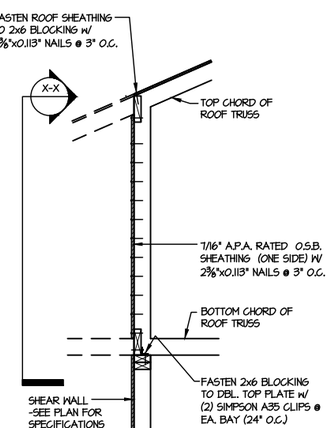

9 TYPICAL SHEAR TRANSFER DETAIL @ INTERIOR SHEARWALL

SCALE: 3/4"=1'-0"

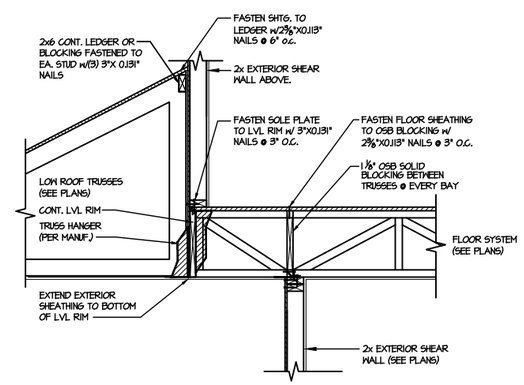

10 TYPICAL SHEAR TRANSFER DETAIL @ EXTERIOR WALL CANT'D ABOVE

SCALE: 3/4"=1'-0"

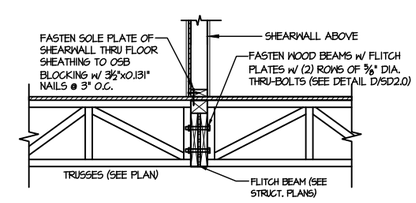

11 SHEAR TRANSFER DETAIL @ INT. SHEARWALL ABOVE & BELOW

SCALE: 3/4"=1'-0" PERPENDICULAR FRAMING

seal: 3/20/25

NORTH CAROLINA PROFESSIONAL SEAL 036012 ENGINEER JOSEPH T. RICKER

© Copyright : MULHERN & KULP Structural Engineering, Inc.

MULHERN+KULP
RESIDENTIAL STRUCTURAL ENGINEERING
5030 Brandywine Ave, Building 4 • Pittsburgh, PA 15232
p:216-846-0200 • mulhern-kulp.com
NC LICENSE #C-3825

M&K project number: 126-24045

project mgr: JTR
drawn by: JAD
issue date: 03-19-25

REVISIONS:

DRB HOMES

FRAMING DETAILS

CAMPBELL RIDGE
LOT 23 - STONEHAVEN 1
RALEIGH, NC

sheet: SD2.1B

FILE: RLH - Campbell Ridge - Lot 23 - Structurals DATE: 3/20/2025 10:18 AM

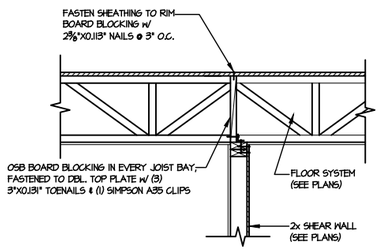

SHEAR TRANSFER DETAIL @ INTERIOR SHEAR WALL
1 SCALE: N.T.S. PERPENDICULAR TO FRAMING

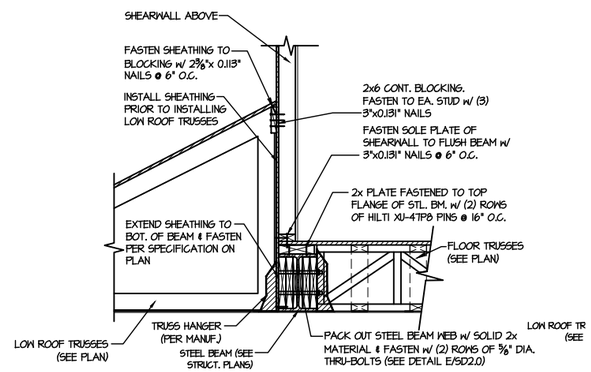

SHEAR TRANSFER DETAIL @ EXTERIOR SHEARWALL ABOVE
2 SCALE: 3/4"=1'-0"

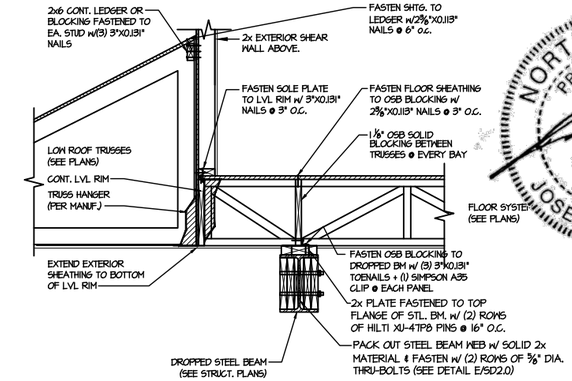

TYPICAL SHEAR TRANSFER DETAIL @ EXTERIOR WALL ABOVE GARAGE
4 SCALE: 3/4"=1'-0"

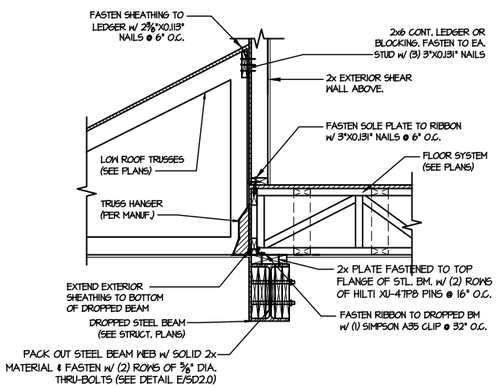

TYPICAL SHEAR TRANSFER DETAIL BETWEEN FLOORS @ INTERIOR WALL
5 SCALE: 3/4"=1'-0"

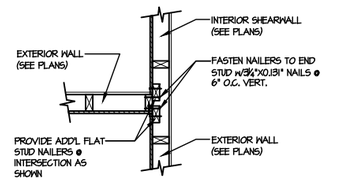

SHEAR TRANSFER DETAIL @ INTERSECTING INT. SHEARWALL
7 SCALE: 3/4"=1'-0" SHTG. ON SAME FACE

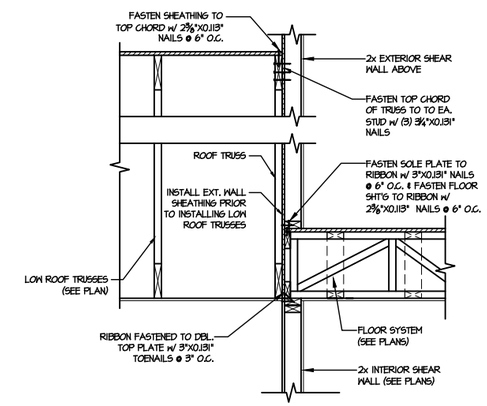

TYPICAL SHEAR TRANSFER DETAIL BETWEEN FLOORS @ INTERIOR WALL
8 SCALE: 3/4"=1'-0"

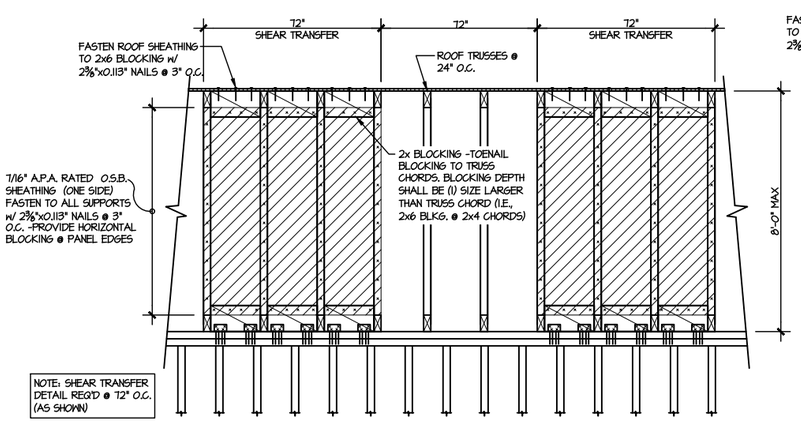

TYPICAL SHEAR TRANSFER DETAIL @ INTERIOR SHEARWALL
X-X SCALE: 3/4"=1'-0"

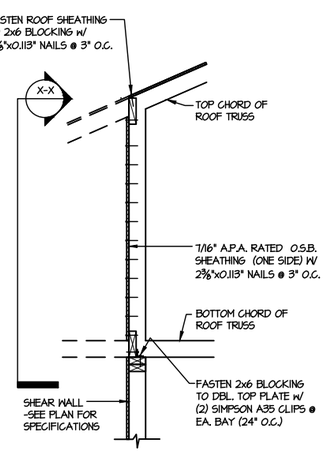

TYPICAL SHEAR TRANSFER DETAIL @ INTERIOR SHEARWALL
9 SCALE: 3/4"=1'-0"

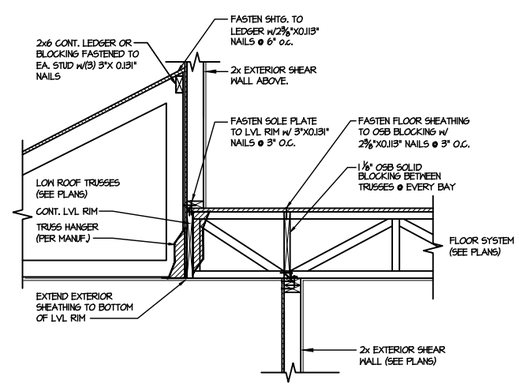

TYPICAL SHEAR TRANSFER DETAIL @ EXTERIOR WALL CANT'D ABOVE
10 SCALE: 3/4"=1'-0"

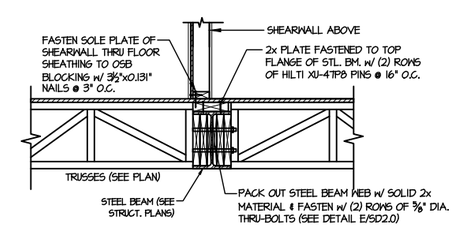

SHEAR TRANSFER DETAIL @ INT. SHEARWALL ABOVE & BELOW
11 SCALE: 3/4"=1'-0" PERPENDICULAR FRAMING

seal: 3/20/25

NORTH CAROLINA PROFESSIONAL SEAL 036012 ENGINEER JOSEPH T. RICKER

© Copyright : MULHERN & KULP Structural Engineering, Inc.

MULHERN+KULP
RESIDENTIAL STRUCTURAL ENGINEERING
5500 Brandywine Ave, Building 4 • Pittsburgh, PA 15232
p:216-846-5200 • mulhern-kulp.com
NC LICENSE #C-3825

M&K project number: 126-24045

project mgr: JTR
drawn by: JAD
issue date: 03-19-25

REVISIONS:

DR HOMES

FRAMING DETAILS

CAMPBELL RIDGE
LOT 23 - STONEHAVEN 1
RALEIGH, NC

sheet: SD2.1C

FILE: RLH - Campbell Ridge - Lot 23 - Structurals DATE: 3/20/2025 10:18 AM

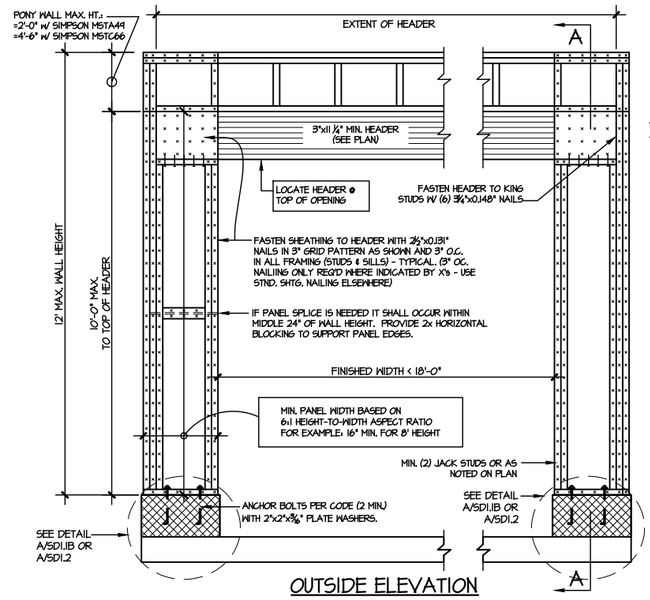

OUTSIDE ELEVATION

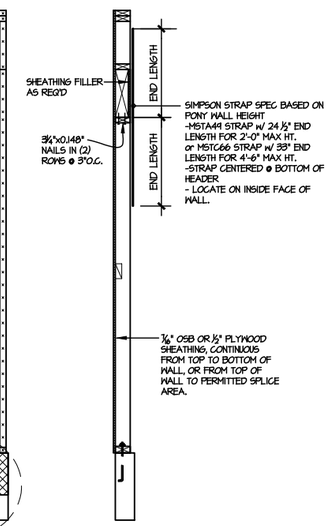

SECTION A-A THROUGH PIER

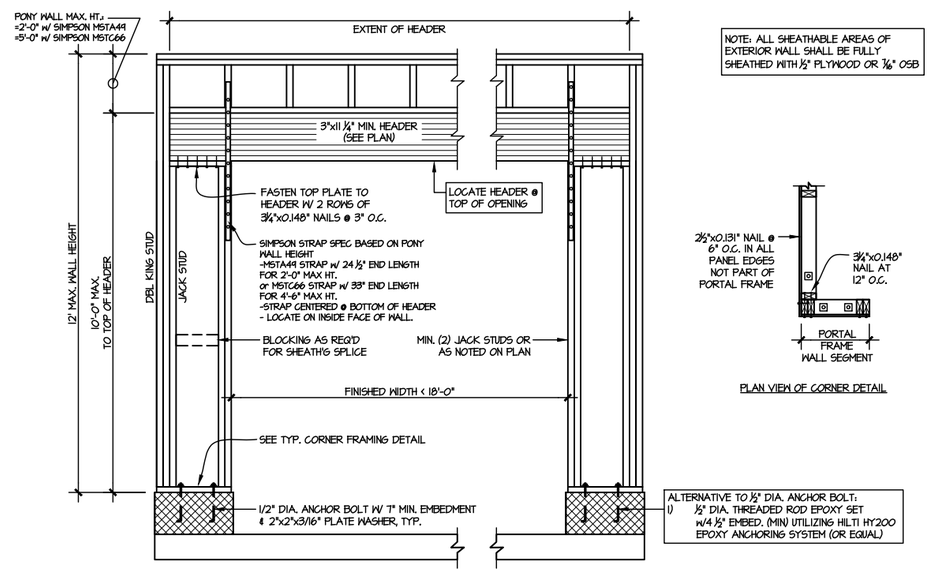

NOTE: ALL SHEATHABLE AREAS OF EXTERIOR WALL SHALL BE FULLY SHEATHED WITH ½" PLYWOOD OR 7/16" OSB

PLAN VIEW OF CORNER DETAIL

INSIDE ELEVATION

TWO SIDED GARAGE PORTAL FRAME BRACING ELEVATION ON CMU STEM

1

SCALE: N.T.S.

SCALE: N.T.S.

seal: 3/20/25

NORTH CAROLINA PROFESSIONAL SEAL 036012 ENGINEER JOSEPH T. RICKER

© Copyright : MULHERN & KULP Structural Engineering, Inc.

MULHERN+KULP
RESIDENTIAL STRUCTURAL ENGINEERING
5030 Brookside Ave, Building 4 • Pittsburgh, PA 15232
p 216-846-0800 • mulhern-kulp.com
NC LICENSE #C-3825

M&K project number: 126-24045

project mgr: JTR
drawn by: JAD
issue date: 03-19-25

REVISIONS:

DR HOMES

FRAMING DETAILS

CAMPBELL RIDGE
LOT 23 - STONEHAVEN 1
RALEIGH, NC

sheet: SD2.2

FILE: RLH - Campbell Ridge - Lot 23 - Structurals DATE: 3/20/2025 10:18 AM

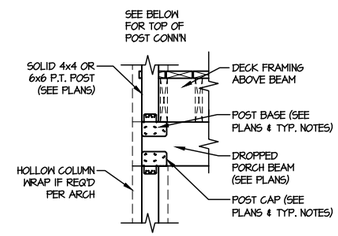

TYPICAL CONNECTION
DETAIL @ 2nd FLOOR DECK

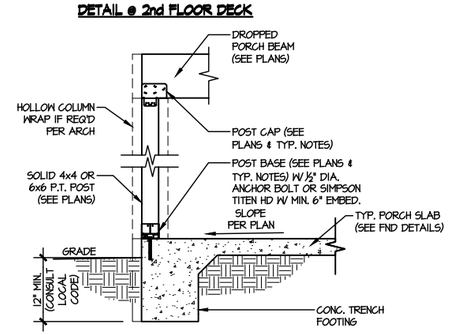

TYPICAL PORCH
POST CONNECTION DETAIL
3
SCALE: NONE

SLAB ON GRADE SHOWN (RAISED SLAB SIM.)

seal: 3/20/25

NORTH CAROLINA PROFESSIONAL SEAL 036012 ENGINEER JOSEPH T. RICKER

© Copyright : MULHERN & KULP Structural Engineering, Inc.

MULHERN+KULP
RESIDENTIAL STRUCTURAL ENGINEERING
3000 Bancroftville Ave, Building 4 • Jeffersonville, PA 19403
p 215-646-5200 • mulhern-kulp.com
NC LICENSE #C-3825

M&K project number: 126-24045

project mgr: JTR
drawn by: JAD
issue date: 03-19-25

REVISIONS:

DRB HOMES

FRAMING DETAILS

CAMPBELL RIDGE
LOT 23 – STONEHAVEN 1
RALEIGH, NC

sheet: SD3.0

FILE: RLH - Campbell Ridge - Lot 23 - Structurals DATE: 3/20/2025 10:18 AM

WARNING! Long span trusses, 60' or greater in length, require extreme care and experience for proper and safe handling and installation. For general handling and installation guidance, see the "Guide to Good Practice for Handling, Installing, Restraining & Bracing of Metal Plate Connected Wood Trusses ("BCSI"), JOINTLY PRODUCED BY SBCA and TPI. For project specific guidance, consult with a registered design professional. ATLANTIC assumes no responsibility for the handling, installation or bracing of trusses.

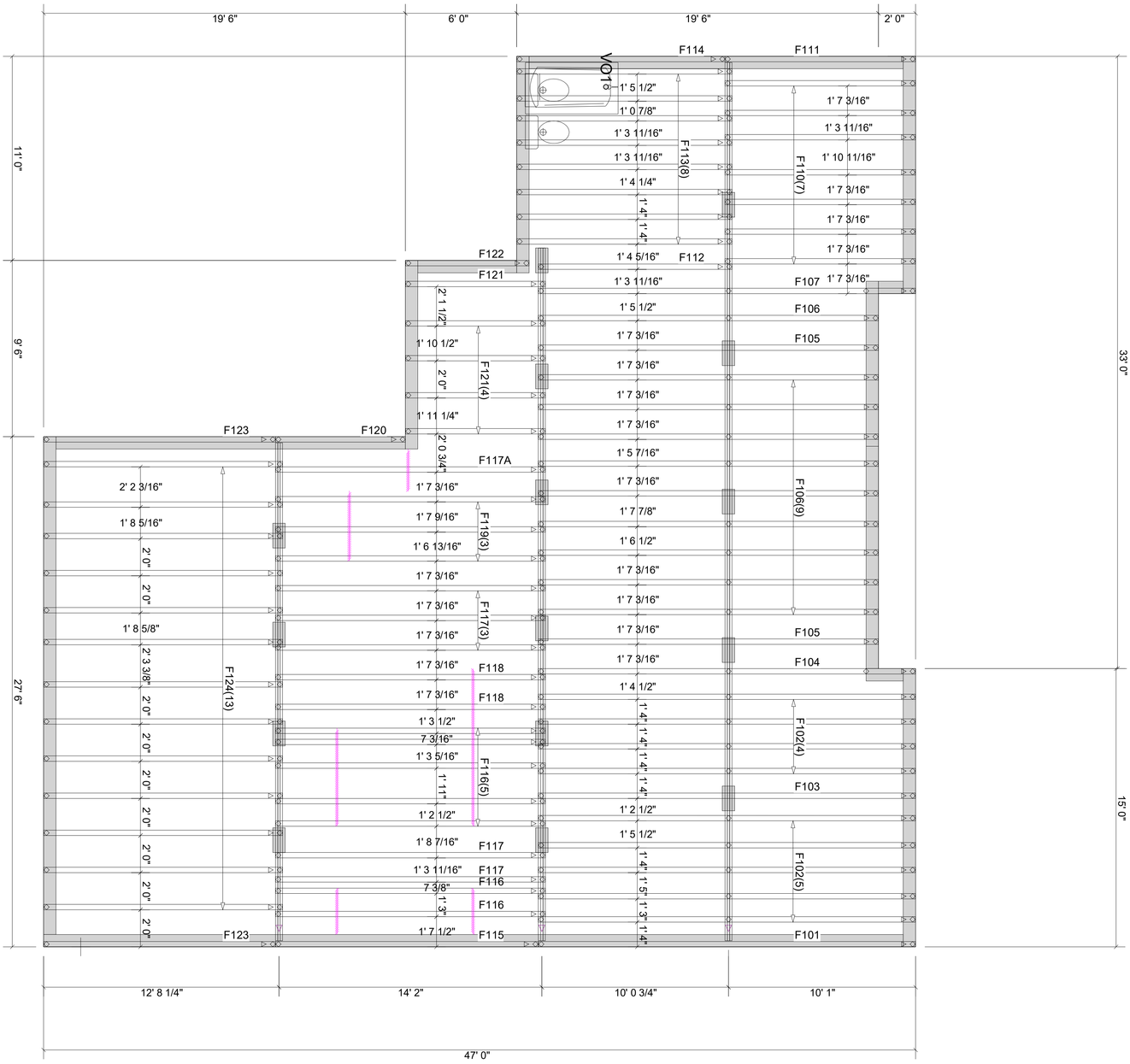

▲= LEFT END OF TRUSS

FOR PERMIT

ATLANTIC

Moncks Corner/Easley, SC (800) 475-3999
Sparta, NC (336) 372-2226

REVISIONS:

Client:	DRB GROUP-RALEIGH
Job:	LOT 0.0023 CAMPBELL RIDGE
Plan Information:	STONEHAVEN-1
NOT TO SCALE	Date: 03/14/25
Drawn By: CGT	Job #: 25-2453-F01
	Sales Rep: KYLE GIBSON
	Phone: 864-304-3282

FLOOR

Products				
Net Qty	Plies	Product	Length	PlotID
2	2	1-3/4" x 11-7/8" VERSA-LAM® 2.0 3100 SP	22' 0"	BM-1
2	2	1-3/4" x 14" VERSA-LAM® 2.0 3100 SP	16' 0"	BM-2
3	3	1-3/4" x 14" VERSA-LAM® 2.0 3100 SP	14' 0"	BM-3
1	1	1-3/4" x 14" VERSA-LAM® 2.0 3100 SP	12' 0"	BM-4
2	2	1-3/4" x 14" VERSA-LAM® 2.0 3100 SP	6' 0"	BM-5
4	4	1-3/4" x 18" VERSA-LAM® 2.0 3100 SP	22' 0"	BM-6
2	2	1-3/4" x 18" VERSA-LAM® 2.0 3100 SP	16' 0"	BM-7
2	1	1-1/8" x 14" BC RIM BOARD OSB	12' 0"	Blk1

Truss Connector Total List		
Qty	Product	Manuf
33	THA422	
3	THAC422	Simpson

Connector Summary			
Flange	Product	Manuf	Qty
None	HHUS410	Simpson	1

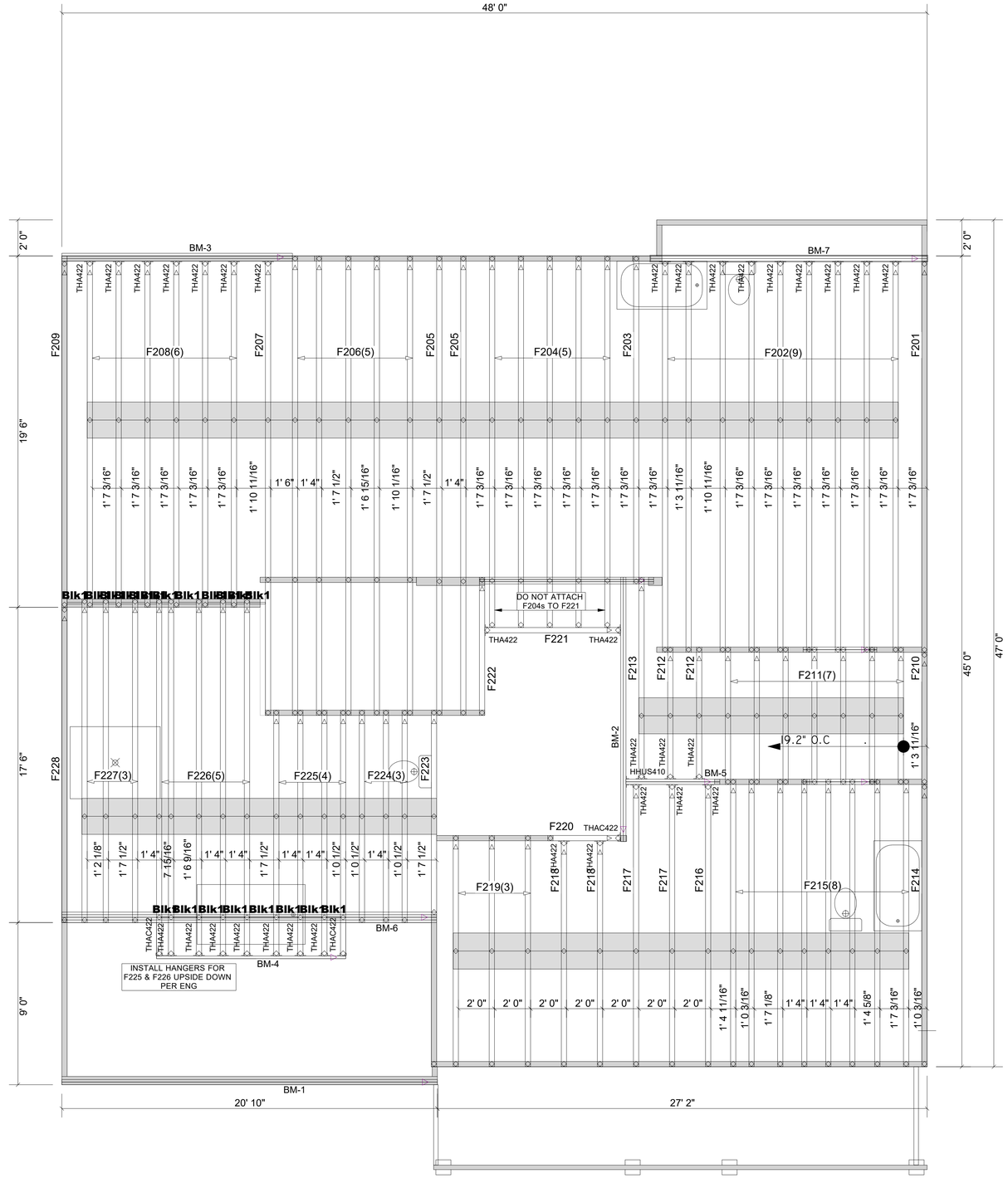

FOR PERMIT

▲= LEFT END OF TRUSS

REVISIONS:

FLOOR

Client: DRB GROUP-RALEIGH

Job: LOT 0.0023 CAMPBELL RIDGE

Plan Information: STONEHAVEN-1

NOT TO SCALE

Date: 03/14/25

Drawn By: CGT

Job #: 25-2453-F02

Sales Rep: KYLE GIBSON

Phone: 864-304-3282

ATLANTIC

Moncks Corner/Easley, SC (800) 475-3999

Sparta, NC (336) 372-2226

WARNING! Long span trusses, 60' or greater in length, require extreme care and experience for proper and safe handling and installation. For general handling and installation guidance, see the "Guide to Good Practice for Handling, Installing, Restraining & Bracing of Metal Plate Connected Wood Trusses ("BCSI"), JOINTLY PRODUCED BY SBCA and TPI. For project specific guidance, consult with a registered design professional. ATLANTIC assumes no responsibility for the handling, installation or bracing of trusses.

Truss Connector Total List		
Qty	Product	Manuf
4	HTU26	Simpson
2	LUC26Z	Simpson
23	LUS26	Simpson

Products					
Fab Type	Net Qty	Plies	Product	Length	PlotID
FF	2	2	1-3/4" x 9-1/2" VERSA-LAM® 2.0 3100 SP	8' 0"	BM1

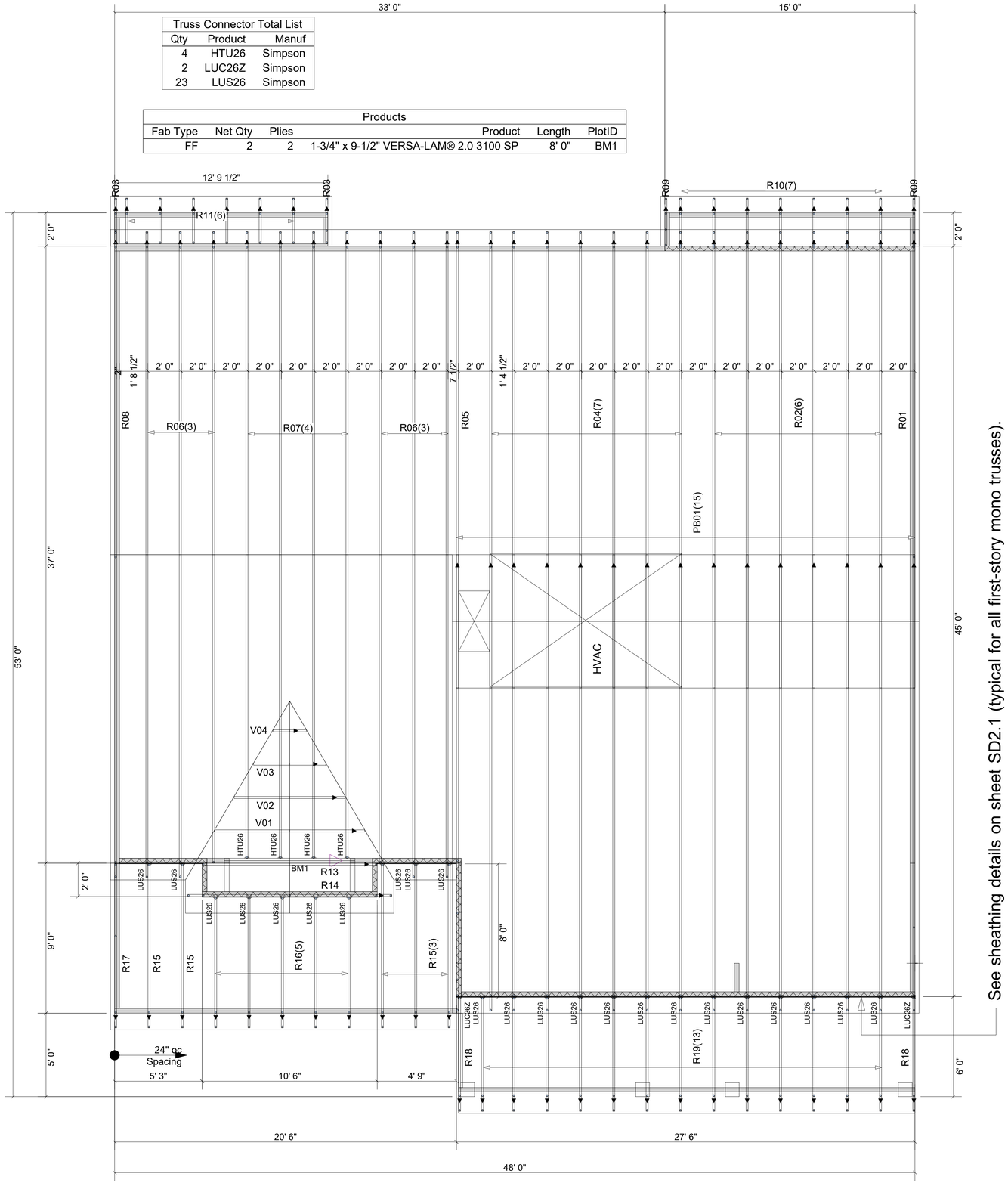

See sheathing details on sheet SD2.1 (typical for all first-story mono trusses).

◄= LEFT END OF TRUSS

FOR PERMIT

ROOF

Client: DRB GROUP-RALEIGH

Job: LOT 0.0023 CAMPBELL RIDGE

Plan Information: STONEHAVEN-1

NOT TO SCALE

Date: 03/14/25

Drawn By: CGT

Job #: 25-2453-R01

Sales Rep: KYLE GIBSON
Phone: 864-304-3282

REVISIONS:

ATLANTIC

Moncks Corner/Easley, SC (800) 475-3999
Sparta, NC (336) 372-2226

WARNING! Long span trusses, 60' or greater in length, require extreme care and experience for proper and safe handling and installation. For general handling and installation guidance, see the "Guide to Good Practice for Handling, Installing, Restraining & Bracing of Metal Plate Connected Wood Trusses ("BCSI"), JOINTLY PRODUCED BY SBCA and TPI. For project specific guidance, consult with a registered design professional. ATLANTIC assumes no responsibility for the handling, installation or bracing of trusses.