ENGINEERING BY TRENCO
A MiTek Affiliate

Trenco
818 Soundside Rd
Edenton, NC 27932

Re: 25020165-01
48 Serenity-Roof-671 Capstone B TMB GLH

The truss drawing(s) referenced below have been prepared by Truss Engineering Co. under my direct supervision based on the parameters provided by Carter Components (Sanford, NC)).

Pages or sheets covered by this seal: I71710414 thru I71710451

My license renewal date for the state of North Carolina is December 31, 2025.

North Carolina COA: C-0844

NORTH CAROLINA PROFESSIONAL SEAL 036322 ENGINEER ERIC A. GILBERT

March 3,2025

Gilbert, Eric

IMPORTANT NOTE: The seal on these truss component designs is a certification that the engineer named is licensed in the jurisdiction(s) identified and that the designs comply with ANSI/TPI 1. These designs are based upon parameters shown (e.g., loads, supports, dimensions, shapes and design codes), which were given to MiTek or TRENCO. Any project specific information included is for MiTek's or TRENCO's customers file reference purpose only, and was not taken into account in the preparation of these designs. MiTek or TRENCO has not independently verified the applicability of the design parameters or the designs for any particular building. Before use, the building designer should verify applicability of design parameters and properly incorporate these designs into the overall building design per ANSI/TPI 1, Chapter 2.

Job	Truss	Truss Type	Qty	Ply	48 Serenity-Roof-671 Capstone B TMB GLH
25020165-01	A1	Common	3	1	I71710414 Job Reference (optional)

Carter Components (Sanford, NC), Sanford, NC - 27332,

Run: 8.73 S Feb 19 2025 Print: 8.730 S Feb 19 2025 MiTek Industries, Inc. Thu Feb 27 15:30:23 Page: 1
ID:RHldXxiJcsNW0wy30xTCkszgv8p-RfC?PsB70Hq3NSgPqnL8w3uITXbGKWrCDoi7J4zJC?f

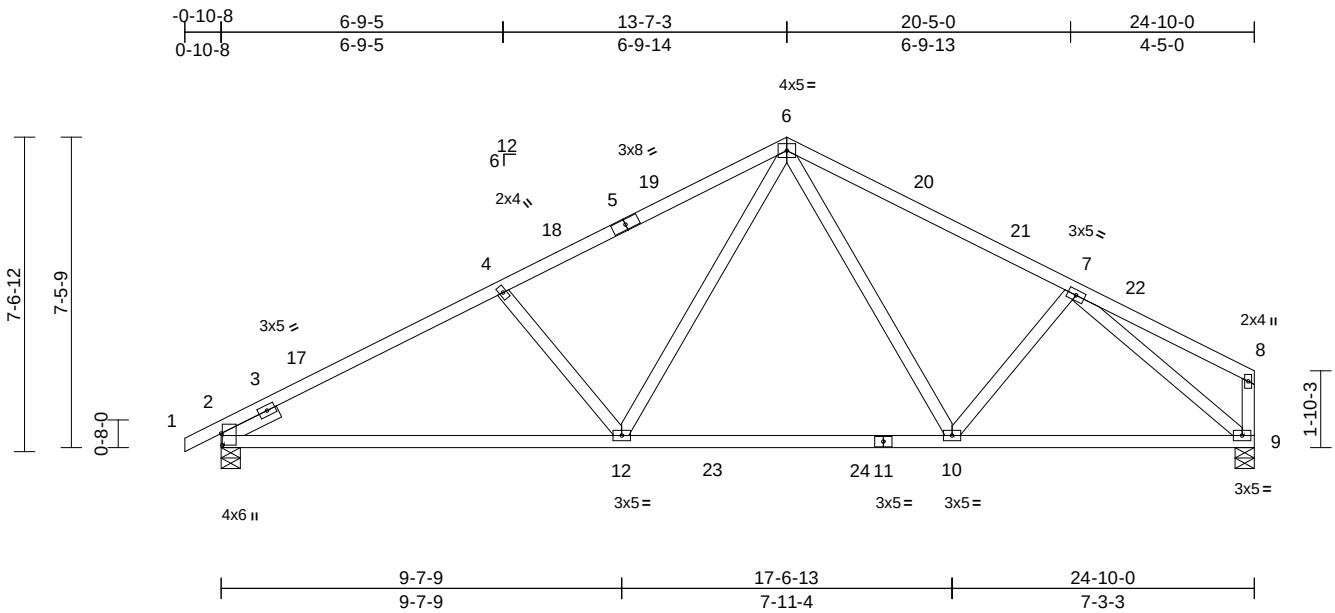

Scale = 1:55.4

Plate Offsets (X, Y): [2:0-3-5,0-0-5]

Loading	(psf)	Spacing	2-0-0	CSI		DEFL	in	(loc)	l/defl	L/d	PLATES	GRIP
TCLL (roof)	20.0	Plate Grip DOL	1.15	TC	0.88	Vert(LL)	-0.15	10-12	>999	240	MT20	244/190
Snow (Pf)	20.0	Lumber DOL	1.15	BC	0.87	Vert(CT)	-0.28	12-15	>999	180		
TCDL	10.0	Rep Stress Incr	YES	WB	0.88	Horz(CT)	0.05	9	n/a	n/a		
BCLL	0.0*	Code	IRC2021/TPI2014	Matrix-MSH								
BCDL	10.0										Weight: 129 lb	FT = 20%

LUMBER

TOP CHORD 2x4 SP No.1
BOT CHORD 2x4 SP No.2
WEBS 2x4 SP No.3
SLIDER Left 2x4 SP No.3 -- 1-6-0

BRACING

TOP CHORD Structural wood sheathing directly applied or 2-2-0 oc purlins, except end verticals.
BOT CHORD Rigid ceiling directly applied or 10-0-0 oc bracing.

REACTIONS (size) 2=0-5-8, 9=0-5-8
Max Horiz 2=128 (LC 13)
Max Uplift 2=-118 (LC 14), 9=-83 (LC 15)
Max Grav 2=1144 (LC 5), 9=1093 (LC 6)

FORCES (lb) - Maximum Compression/Maximum Tension
TOP CHORD 1-2=0/23, 2-4=-1882/259, 4-6=-1674/259, 6-7=-1450/246, 7-8=-109/63, 8-9=-108/49
BOT CHORD 2-12=-236/1664, 10-12=-25/1058, 9-10=-103/1200
WEBS 4-12=-461/220, 6-12=-79/736, 6-10=-49/356, 7-10=-112/174, 7-9=-1502/180

NOTES

1) Unbalanced roof live loads have been considered for this design.
2) Wind: ASCE 7-16; Vult=130mph (3-second gust) Vasd=103mph; TCDL=6.0psf; BCDL=6.0psf; h=25ft; Cat. II; Exp B; Enclosed; MWFRS (envelope) exterior zone and C-C Exterior(2E) -0-10-8 to 2-1-8, Interior (1) 2-1-8 to 10-7-3, Exterior(2R) 10-7-3 to 16-7-3, Interior (1) 16-7-3 to 21-8-4, Exterior(2E) 21-8-4 to 24-8-4 zone; cantilever left and right exposed ; end vertical left and right exposed;C-C for members and forces & MWFRS for reactions shown; Lumber DOL=1.60 plate grip DOL=1.60
3) TCLL: ASCE 7-16; Pr=20.0 psf (roof LL: Lum DOL=1.15 Plate DOL=1.15); Pf=20.0 psf (Lum DOL=1.15 Plate DOL=1.15); Is=1.0; Rough Cat B; Fully Exp.; Ce=0.9; Cs=1.00; Ct=1.10
4) Unbalanced snow loads have been considered for this design.
5) This truss has been designed for greater of min roof live load of 12.0 psf or 1.00 times flat roof load of 20.0 psf on overhangs non-concurrent with other live loads.
6) This truss has been designed for a 10.0 psf bottom chord live load nonconcurrent with any other live loads.
7) * This truss has been designed for a live load of 20.0psf on the bottom chord in all areas where a rectangle 3-06-00 tall by 2-00-00 wide will fit between the bottom chord and any other members, with BCDL = 10.0psf.
8) One H2.5A Simpson Strong-Tie connectors recommended to connect truss to bearing walls due to UPLIFT at jt(s) 2 and 9. This connection is for uplift only and does not consider lateral forces.

LOAD CASE(S) Standard

March 3,2025

WARNING - Verify design parameters and READ NOTES ON THIS AND INCLUDED MITEK REFERENCE PAGE MII-7473 rev. 1/2/2023 BEFORE USE.
Design valid for use only with MiTek® connectors. This design is based only upon parameters shown, and is for an individual building component, not a truss system. Before use, the building designer must verify the applicability of design parameters and properly incorporate this design into the overall building design. Bracing indicated is to prevent buckling of individual truss web and/or chord members only. Additional temporary and permanent bracing is always required for stability and to prevent collapse with possible personal injury and property damage. For general guidance regarding the fabrication, storage, delivery, erection and bracing of trusses and truss systems, see **ANSI/TPI1 Quality Criteria and DSB-22** available from Truss Plate Institute (www.tpinst.org) and **BCSI Building Component Safety Information** available from the Structural Building Component Association (www.sbcacomponents.com)

ENGINEERING BY TRENCO A MiTek Affiliate
818 Soundside Road
Edenton, NC 27932

Job	Truss	Truss Type	Qty	Ply	48 Serenity-Roof-671 Capstone B TMB GLH
25020165-01	A2	Roof Special	6	1	I71710415 Job Reference (optional)

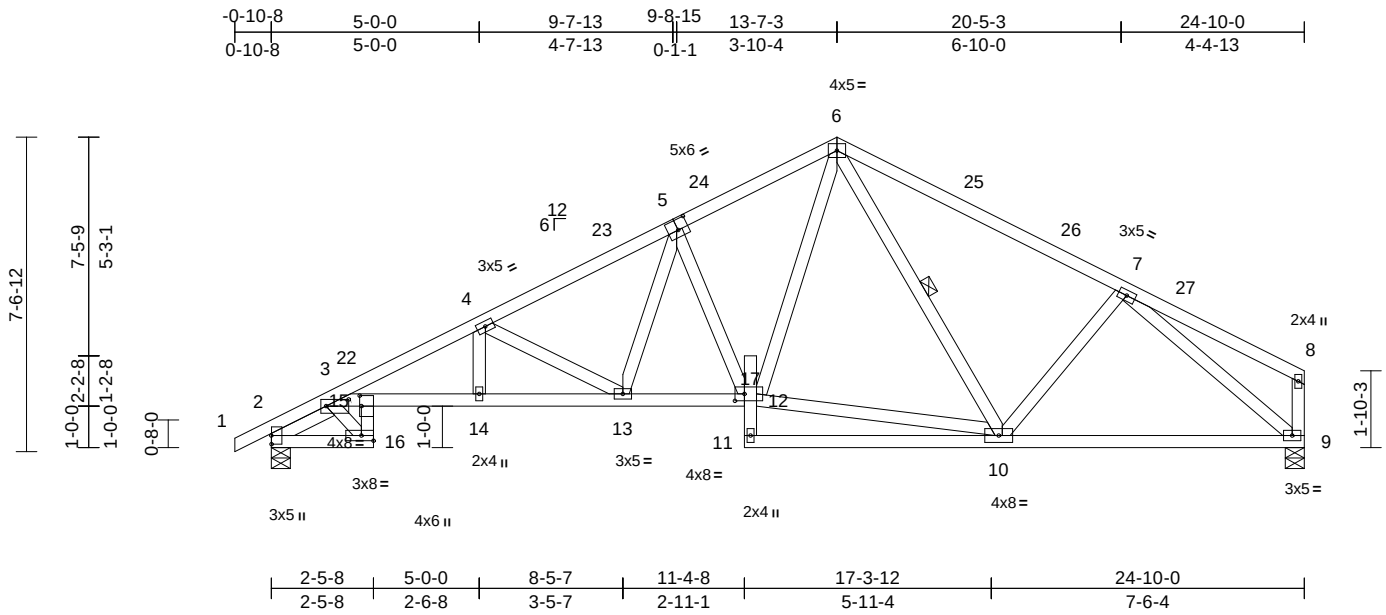

Scale = 1:55.4

Plate Offsets (X, Y): [2:0-2-8,0-0-1], [3:0-6-8,0-1-15], [5:0-3-0,0-3-0], [12:0-2-12,0-2-0], [15:0-3-0,0-0-8]

Loading	(psf)	Spacing	2-0-0	CSI		DEFL	in	(loc)	l/defl	L/d	PLATES	GRIP
TCLL (roof)	20.0	Plate Grip DOL	1.15	TC	0.80	Vert(LL)	-0.14	14-15	>999	240	MT20	244/190
Snow (Pf)	20.0	Lumber DOL	1.15	BC	0.93	Vert(CT)	-0.28	14-15	>999	180		
TCDL	10.0	Rep Stress Incr	YES	WB	0.79	Horz(CT)	0.17	9	n/a	n/a		
BCLL	0.0*	Code	IRC2021/TPI2014	Matrix-MSH								
BCDL	10.0										Weight: 156 lb	FT = 20%

LUMBER

TOP CHORD 2x4 SP No.2 *Except* 6-8:2x4 SP No.1
BOT CHORD 2x4 SP No.2 *Except* 3-12:2x4 SP 2400F 2.0E, 17-11:2x4 SP No.3
WEBS 2x4 SP No.3
SLIDER Left 2x4 SP No.3 -- 1-6-15

BRACING

TOP CHORD Structural wood sheathing directly applied or 2-2-0 oc purlins, except end verticals.
BOT CHORD Rigid ceiling directly applied or 10-0-0 oc bracing, Except:
2-2-0 oc bracing: 14-15.
WEBS 1 Row at midpt 6-10

REACTIONS (size) 2=0-5-8, 9=0-5-8
Max Horiz 2=128 (LC 13)
Max Uplift 2=-118 (LC 14), 9=-83 (LC 15)
Max Grav 2=1077 (LC 21), 9=1007 (LC 22)

FORCES (lb) - Maximum Compression/Maximum Tension
TOP CHORD 1-2=0/23, 2-3=-742/83, 3-4=-2656/316, 4-6=-1849/284, 6-7=-1195/246, 7-8=-90/59, 8-9=-98/46
BOT CHORD 2-16=-204/1187, 15-16=-260/1575, 3-15=-318/2347, 14-15=-327/2384, 13-14=-327/2384, 12-13=-129/1466, 11-12=0/97, 12-17=0/0, 10-11=0/57, 9-10=-104/1019
WEBS 6-12=-126/884, 7-9=-1321/186, 3-16=-1771/306, 6-10=-81/133, 7-10=-115/175, 10-12=-32/908, 5-12=-658/167, 4-14=-27/447, 4-13=-926/211, 5-13=-43/452

NOTES

1) Unbalanced roof live loads have been considered for this design.
2) Wind: ASCE 7-16; Vult=130mph (3-second gust) Vasd=103mph; TCDL=6.0psf; BCDL=6.0psf; h=25ft; Cat. II; Exp B; Enclosed; MWFRS (envelope) exterior zone and C-C Exterior(2E) -0-10-8 to 2-1-8, Interior (1) 2-1-8 to 10-7-3, Exterior(2R) 10-7-3 to 16-7-3, Interior (1) 16-7-3 to 21-8-4, Exterior(2E) 21-8-4 to 24-8-4 zone; cantilever left and right exposed ; end vertical left and right exposed;C-C for members and forces & MWFRS for reactions shown; Lumber DOL=1.60 plate grip DOL=1.60
3) TCLL: ASCE 7-16; Pr=20.0 psf (roof LL: Lum DOL=1.15 Plate DOL=1.15); Pf=20.0 psf (Lum DOL=1.15 Plate DOL=1.15); Is=1.0; Rough Cat B; Fully Exp.; Ce=0.9; Cs=1.00; Ct=1.10
4) Unbalanced snow loads have been considered for this design.
5) This truss has been designed for greater of min roof live load of 12.0 psf or 1.00 times flat roof load of 20.0 psf on overhangs non-concurrent with other live loads.
6) This truss has been designed for a 10.0 psf bottom chord live load nonconcurrent with any other live loads.
7) * This truss has been designed for a live load of 20.0psf on the bottom chord in all areas where a rectangle 3-06-00 tall by 2-00-00 wide will fit between the bottom chord and any other members.
8) One H2.5A Simpson Strong-Tie connectors recommended to connect truss to bearing walls due to UPLIFT at jt(s) 2 and 9. This connection is for uplift only and does not consider lateral forces.

LOAD CASE(S) Standard

March 3,2025

WARNING - Verify design parameters and READ NOTES ON THIS AND INCLUDED MITEK REFERENCE PAGE MII-7473 rev. 1/2/2023 BEFORE USE.
Design valid for use only with MiTek® connectors. This design is based only upon parameters shown, and is for an individual building component, not a truss system. Before use, the building designer must verify the applicability of design parameters and properly incorporate this design into the overall building design. Bracing indicated is to prevent buckling of individual truss web and/or chord members only. Additional temporary and permanent bracing is always required for stability and to prevent collapse with possible personal injury and property damage. For general guidance regarding the fabrication, storage, delivery, erection and bracing of trusses and truss systems, see **ANSI/TPI1 Quality Criteria and DSB-22** available from Truss Plate Institute (www.tpinst.org) and **BCSI Building Component Safety Information** available from the Structural Building Component Association (www.sbcacomponents.com)

ENGINEERING BY TRENCO A MiTek Affiliate
818 Soundside Road
Edenton, NC 27932

Job	Truss	Truss Type	Qty	Ply	48 Serenity-Roof-671 Capstone B TMB GLH
25020165-01	A3	Common Girder	1	2	I71710416 Job Reference (optional)

Carter Components (Sanford, NC), Sanford, NC - 27332,

Run: 8.73 S Feb 19 2025 Print: 8.730 S Feb 19 2025 MiTek Industries, Inc. Thu Feb 27 15:30:24 Page: 1
ID:p1wUX0ekOW?1gG1mlTKB55zgv50-RfC?PsB70Hq3NSgPqnL8w3uITXbGKWrCDoi7J4zJC?f

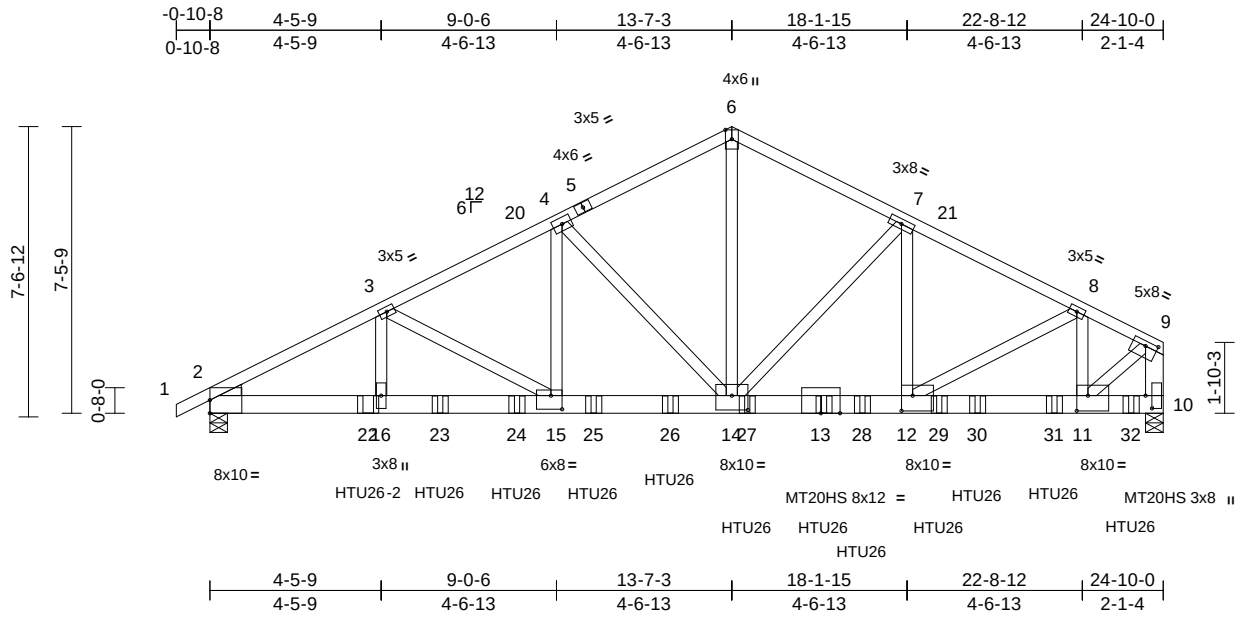

Scale = 1:60

Plate Offsets (X, Y): [2:Edge,0-4-1], [9:0-3-12,0-1-8], [10:0-4-0,0-2-0], [11:0-3-8,0-4-12], [12:0-3-8,0-4-12], [14:0-5-0,0-4-8], [15:0-3-8,0-4-4]

Loading	(psf)	Spacing	1-11-4	CSI		DEFL	in	(loc)	l/defl	L/d	PLATES	GRIP
TCLL (roof)	20.0	Plate Grip DOL	1.15	TC	0.71	Vert(LL)	-0.16	15-16	>999	240	MT20	244/190
Snow (Pf)	20.0	Lumber DOL	1.15	BC	0.75	Vert(CT)	-0.31	15-16	>953	180	MT20HS	187/143
TCDL	10.0	Rep Stress Incr	NO	WB	0.96	Horz(CT)	0.07	10	n/a	n/a		
BCLL	0.0*	Code	IRC2021/TPI2014	Matrix-MSH								
BCDL	10.0										Weight: 341 lb	FT = 20%

LUMBER

TOP CHORD 2x4 SP No.2 *Except* 1-5:2x4 SP 2400F 2.0E
BOT CHORD 2x6 SP 2400F 2.0E
WEBS 2x4 SP No.3 *Except* 10-9:2x6 SP No.2, 11-9,14-6:2x4 SP No.2
WEDGE Left: 2x4 SP No.3

BRACING

TOP CHORD Structural wood sheathing directly applied or 3-5-10 oc purlins, except end verticals.
BOT CHORD Rigid ceiling directly applied or 10-0-0 oc bracing.

REACTIONS (size) 2=0-5-8, 10=0-5-8
Max Horiz 2=123 (LC 11)
Max Uplift 2=-8 (LC 12)
Max Grav 2=6600 (LC 19), 10=8956 (LC 23)

FORCES (lb) - Maximum Compression/Maximum Tension
TOP CHORD 1-2=0/23, 2-3=-12200/0, 3-4=-10243/0, 4-6=-7953/0, 6-7=-7919/0, 7-8=-9923/0, 8-9=-7145/0, 9-10=-8332/0
BOT CHORD 2-16=-110/10779, 15-16=0/10779, 14-15=0/9153, 12-14=0/8857, 11-12=0/6335, 10-11=0/299
WEBS 9-11=0/7880, 4-14=-3515/618, 6-14=0/6835, 7-14=-2626/0, 3-16=-369/1758, 3-15=-1877/543, 4-15=-491/3294, 7-12=0/2598, 8-12=0/2878, 8-11=-2727/0

NOTES

1) 2-ply truss to be connected together with 10d (0.131"x3") nails as follows:
Top chords connected as follows: 2x4 - 1 row at 0-9-0 oc, 2x6 - 2 rows staggered at 0-9-0 oc.
Bottom chords connected as follows: 2x6 - 3 rows staggered at 0-6-0 oc.
Web connected as follows: 2x4 - 1 row at 0-9-0 oc.
2) All loads are considered equally applied to all plies, except if noted as front (F) or back (B) face in the LOAD CASE(S) section. Ply to ply connections have been provided to distribute only loads noted as (F) or (B), unless otherwise indicated.
3) Unbalanced roof live loads have been considered for this design.
4) Wind: ASCE 7-16; Vult=130mph (3-second gust) Vasd=103mph; TCDL=6.0psf; BCDL=6.0psf; h=25ft; Cat. II; Exp B; Enclosed; MWFRS (envelope) exterior zone; cantilever left and right exposed ; end vertical left and right exposed; Lumber DOL=1.60 plate grip DOL=1.60
5) TCLL: ASCE 7-16; Pr=20.0 psf (roof LL: Lum DOL=1.15 Plate DOL=1.15); Pf=20.0 psf (Lum DOL=1.15 Plate DOL=1.15); Is=1.0; Rough Cat B; Fully Exp.; Ce=0.9; Cs=1.00; Ct=1.10
6) Unbalanced snow loads have been considered for this design.
7) This truss has been designed for greater of min roof live load of 12.0 psf or 1.00 times flat roof load of 20.0 psf on overhangs non-concurrent with other live loads.
8) All plates are MT20 plates unless otherwise indicated.
9) This truss has been designed for a 10.0 psf bottom chord live load nonconcurrent with any other live loads.
10) * This truss has been designed for a live load of 20.0psf on the bottom chord in all areas where a rectangle 3-06-00 tall by 2-00-00 wide will fit between the bottom chord and any other members.
11) One H2.5A Simpson Strong-Tie connectors recommended to connect truss to bearing walls due to UPLIFT at jt(s) 2. This connection is for uplift only and does not consider lateral forces.
12) Use Simpson Strong-Tie HTU26-2 (20-10d Girder, 14-10d Truss) or equivalent at 4-1-8 from the left end to connect truss(es) to back face of bottom chord.
13) Use Simpson Strong-Tie HTU26 (20-10d Girder, 11-10dx1 1/2 Truss) or equivalent spaced at 2-0-0 oc max. starting at 6-0-0 from the left end to 12-0-0 to connect truss(es) to back face of bottom chord.
14) Use Simpson Strong-Tie HTU26 (10-16d Girder, 14-10dx1 1/2 Truss) or equivalent spaced at 2-0-0 oc max. starting at 14-0-0 from the left end to 24-0-0 to connect truss(es) to back face of bottom chord.
15) Fill all nail holes where hanger is in contact with lumber.

LOAD CASE(S) Standard

1) Dead + Snow (balanced): Lumber Increase=1.15, Plate Increase=1.15
Uniform Loads (lb/ft)
Vert: 1-6=-58, 6-9=-58, 10-17=-19
Concentrated Loads (lb)
Vert: 13=-1004 (B), 22=-1988 (B), 23=-843 (B), 24=-841 (B), 25=-933 (B), 26=-980 (B), 27=-1004 (B), 28=-1004 (B), 29=-1004 (B), 30=-1004 (B), 31=-1004 (B), 32=-1007 (B)

March 3,2025

WARNING - Verify design parameters and READ NOTES ON THIS AND INCLUDED MITEK REFERENCE PAGE MII-7473 rev. 1/2/2023 BEFORE USE.
Design valid for use only with MiTek® connectors. This design is based only upon parameters shown, and is for an individual building component, not a truss system. Before use, the building designer must verify the applicability of design parameters and properly incorporate this design into the overall building design. Bracing indicated is to prevent buckling of individual truss web and/or chord members only. Additional temporary and permanent bracing is always required for stability and to prevent collapse with possible personal injury and property damage. For general guidance regarding the fabrication, storage, delivery, erection and bracing of trusses and truss systems, see **ANSI/TPI1 Quality Criteria and DSB-22** available from Truss Plate Institute (www.tpinst.org) and **BCSI Building Component Safety Information** available from the Structural Building Component Association (www.sbcacomponents.com)

ENGINEERING BY TRENCO A MiTek Affiliate
818 Soundside Road
Edenton, NC 27932

Job	Truss	Truss Type	Qty	Ply	48 Serenity-Roof-671 Capstone B TMB GLH
25020165-01	A4	Common	1	1	I71710417 Job Reference (optional)

Carter Components (Sanford, NC), Sanford, NC - 27332, Run: 8.73 S Feb 19 2025 Print: 8.730 S Feb 19 2025 MiTek Industries, Inc. Thu Feb 27 15:30:24 Page: 1
ID:53KIqvvzKhywzqXvAiMpZrzgvDi-RfC?PsB70Hq3NSgPqnL8w3uITXbGKWrCDoi7J4zJC?f

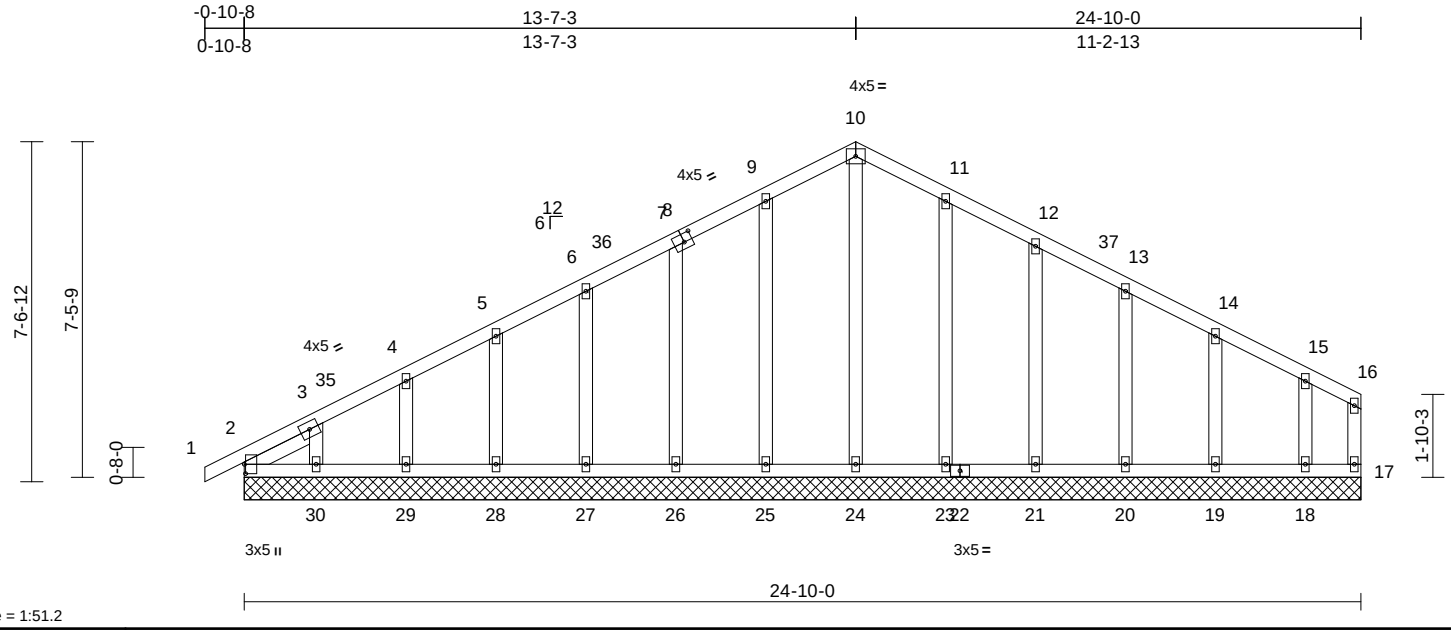

Scale = 1:51.2

Plate Offsets (X, Y): [2:0-2-8,0-0-5], [8:0-2-4,0-2-4]

Loading	(psf)	Spacing	2-0-0	CSI		DEFL	in	(loc)	l/defl	L/d	PLATES	GRIP
TCLL (roof)	20.0	Plate Grip DOL	1.15	TC	0.08	Vert(LL)	n/a	-	n/a	999	MT20	244/190
Snow (Pf)	20.0	Lumber DOL	1.15	BC	0.04	Vert(CT)	n/a	-	n/a	999		
TCDL	10.0	Rep Stress Incr	YES	WB	0.18	Horz(CT)	0.00	17	n/a	n/a		
BCLL	0.0*	Code	IRC2021/TPI2014	Matrix-MSH								
BCDL	10.0										Weight: 154 lb	FT = 20%

LUMBER

TOP CHORD 2x4 SP No.2
BOT CHORD 2x4 SP No.2
WEBS 2x4 SP No.3
OTHERS 2x4 SP No.3
SLIDER Left 2x4 SP No.3 -- 1-7-12

BRACING

TOP CHORD Structural wood sheathing directly applied or 6-0-0 oc purlins, except end verticals.
BOT CHORD Rigid ceiling directly applied or 10-0-0 oc bracing.

REACTIONS (size) 2=24-10-0, 17=24-10-0, 18=24-10-0, 19=24-10-0, 20=24-10-0, 21=24-10-0, 23=24-10-0, 24=24-10-0, 25=24-10-0, 26=24-10-0, 27=24-10-0, 28=24-10-0, 29=24-10-0, 30=24-10-0
Max Horiz 2=128 (LC 13)
Max Uplift 2=-45 (LC 10), 18=-66 (LC 15), 19=-42 (LC 15), 20=-44 (LC 15), 21=-46 (LC 15), 23=-41 (LC 15), 25=-43 (LC 14), 26=-45 (LC 14), 27=-43 (LC 14), 28=-44 (LC 14), 29=-43 (LC 14), 30=-69 (LC 14)
Max Grav 2=133 (LC 26), 17=45 (LC 33), 18=134 (LC 37), 19=165 (LC 1), 20=174 (LC 22), 21=228 (LC 22), 23=245 (LC 22), 24=179 (LC 33), 25=245 (LC 21), 26=228 (LC 21), 27=175 (LC 21), 28=159 (LC 36), 29=165 (LC 21), 30=139 (LC 36)

FORCES (lb) - Maximum Compression/Maximum Tension

TOP CHORD 1-2=0/23, 2-3=-58/40, 3-4=-101/82, 4-5=-87/104, 5-6=-74/149, 6-7=-63/194, 7-9=-61/241, 9-10=-79/283, 10-11=-79/283, 11-12=-61/241, 12-13=-42/194, 13-14=-39/150, 14-15=-38/94, 15-16=-38/40, 16-17=-31/17
BOT CHORD 2-30=-23/56, 29-30=-23/56, 28-29=-23/56, 27-28=-23/56, 26-27=-23/56, 25-26=-23/56, 24-25=-23/56, 23-24=-23/56, 21-23=-23/56, 20-21=-23/56, 19-20=-23/56, 18-19=-23/56, 17-18=-23/56
WEBS 10-24=-186/11, 9-25=-205/70, 7-26=-188/81, 6-27=-135/77, 5-28=-126/77, 4-29=-130/80, 3-30=-118/93, 11-23=-205/70, 12-21=-188/82, 13-20=-134/73, 14-19=-130/102, 15-18=-111/119

NOTES

1) Unbalanced roof live loads have been considered for this design.
2) Wind: ASCE 7-16; Vult=130mph (3-second gust) Vasd=103mph; TCDL=6.0psf; BCDL=6.0psf; h=25ft; Cat. II; Exp B; Enclosed; MWFRS (envelope) exterior zone and C-C Corner(3E) -0-10-8 to 2-1-8, Exterior(2N) 2-1-8 to 10-7-3, Corner(3R) 10-7-3 to 16-7-3, Exterior(2N) 16-7-3 to 21-7-3, Corner(3E) 21-7-3 to 24-8-4 zone; cantilever left and right exposed ; end vertical left and right exposed;C-C for members and forces & MWFRS for reactions shown; Lumber DOL=1.60 plate grip DOL=1.60
3) Truss designed for wind loads in the plane of the truss only. For studs exposed to wind (normal to the face), see Standard Industry Gable End Details as applicable, or consult qualified building designer as per ANSI/TPI 1.
4) TCLL: ASCE 7-16; Pr=20.0 psf (roof LL: Lum DOL=1.15 Plate DOL=1.15); Pf=20.0 psf (Lum DOL=1.15 Plate DOL=1.15); Is=1.0; Rough Cat B; Fully Exp.; Ce=0.9; Cs=1.00; Ct=1.10
5) Unbalanced snow loads have been considered for this design.
6) This truss has been designed for greater of min roof live load of 12.0 psf or 1.00 times flat roof load of 20.0 psf on overhangs non-concurrent with other live loads.
7) All plates are 2x4 MT20 unless otherwise indicated.
8) Gable requires continuous bottom chord bearing.
9) Gable studs spaced at 2-0-0 oc.
10) This truss has been designed for a 10.0 psf bottom chord live load nonconcurrent with any other live loads.
11) * This truss has been designed for a live load of 20.0psf on the bottom chord in all areas where a rectangle 3-06-00 tall by 2-00-00 wide will fit between the bottom chord and any other members.
12) One H2.5A Simpson Strong-Tie connectors recommended to connect truss to bearing walls due to UPLIFT at jt(s) 2, 25, 26, 27, 28, 29, 30, 23, 21, 20, 19, and 18. This connection is for uplift only and does not consider lateral forces.

LOAD CASE(S) Standard

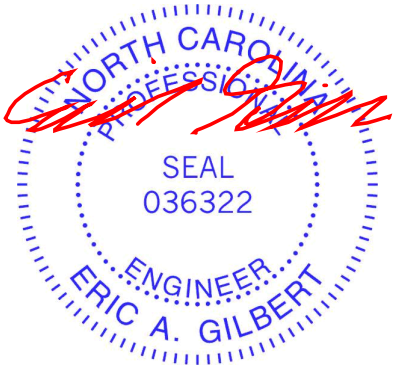

March 3,2025

WARNING - Verify design parameters and READ NOTES ON THIS AND INCLUDED MITEK REFERENCE PAGE MII-7473 rev. 1/2/2023 BEFORE USE.
Design valid for use only with MiTek® connectors. This design is based only upon parameters shown, and is for an individual building component, not a truss system. Before use, the building designer must verify the applicability of design parameters and properly incorporate this design into the overall building design. Bracing indicated is to prevent buckling of individual truss web and/or chord members only. Additional temporary and permanent bracing is always required for stability and to prevent collapse with possible personal injury and property damage. For general guidance regarding the fabrication, storage, delivery, erection and bracing of trusses and truss systems, see **ANSI/TPI1 Quality Criteria and DSB-22** available from Truss Plate Institute (www.tpinst.org) and **BCSI Building Component Safety Information** available from the Structural Building Component Association (www.sbcacomponents.com)

ENGINEERING BY TRENCO A MiTek Affiliate
818 Soundside Road
Edenton, NC 27932

Job	Truss	Truss Type	Qty	Ply	48 Serenity-Roof-671 Capstone B TMB GLH
25020165-01	B1	Monopitch	5	1	I71710418 Job Reference (optional)

Carter Components (Sanford, NC), Sanford, NC - 27332, Run: 8.73 S Feb 19 2025 Print: 8.730 S Feb 19 2025 MiTek Industries, Inc. Thu Feb 27 15:30:25 Page: 1
ID:qpRLZG7iU0zZNUyiiOEtELzgvHI-RfC?PsB70Hq3NSgPqnL8w3uITXbGKWrCDoi7J4zJC?f

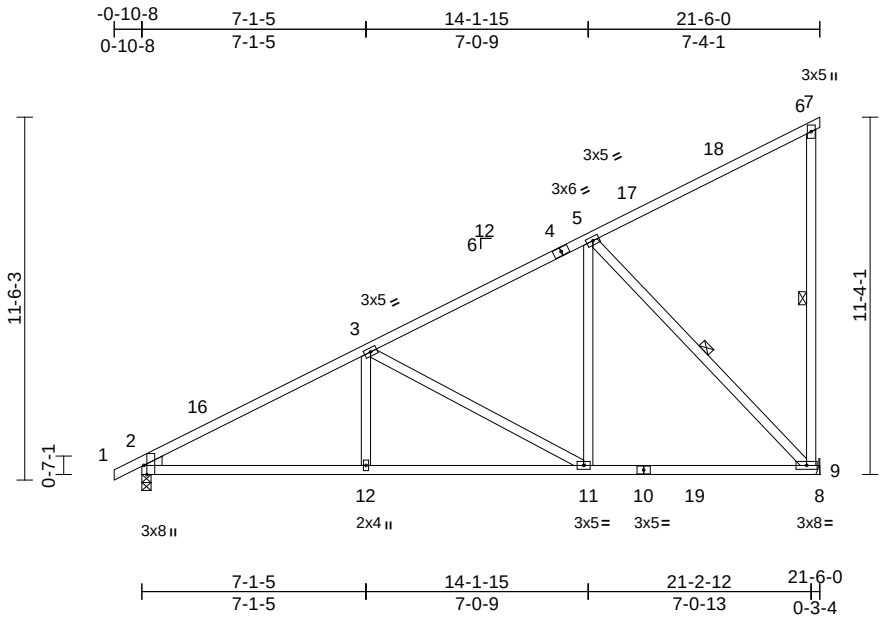

Scale = 1:73.1

Plate Offsets (X, Y): [2:0-3-8,Edge]

Loading	(psf)	Spacing	2-0-0	CSI		DEFL	in	(loc)	l/defl	L/d	PLATES	GRIP
TCLL (roof)	20.0	Plate Grip DOL	1.15	TC	0.96	Vert(LL)	-0.11	9-11	>999	240	MT20	244/190
Snow (Pf)	20.0	Lumber DOL	1.15	BC	0.69	Vert(CT)	-0.18	9-11	>999	180		
TCDL	10.0	Rep Stress Incr	YES	WB	0.90	Horz(CT)	0.04	9	n/a	n/a		
BCLL	0.0*	Code	IRC2021/TPI2014	Matrix-MSH								
BCDL	10.0										Weight: 128 lb	FT = 20%

LUMBER
TOP CHORD 2x4 SP No.2
BOT CHORD 2x4 SP No.2
WEBS 2x4 SP No.3 *Except* 6-9:2x4 SP No.2
WEDGE Left: 2x4 SP No.3

BRACING
TOP CHORD Structural wood sheathing directly applied, except end verticals.
BOT CHORD Rigid ceiling directly applied or 9-10-12 oc bracing.
WEBS 1 Row at midpt 6-9, 5-9

REACTIONS (size) 2=0-3-8, 9= Mechanical
Max Horiz 2=407 (LC 14)
Max Uplift 2=-47 (LC 14), 9=-241 (LC 14)
Max Grav 2=980 (LC 5), 9=1107 (LC 5)

FORCES (lb) - Maximum Compression/Maximum Tension
TOP CHORD 1-2=0/23, 2-3=-1538/24, 3-5=-863/0, 5-6=-166/118, 6-7=-12/0, 6-9=-322/107
BOT CHORD 2-12=-334/1409, 11-12=-334/1409, 9-11=-167/761, 8-9=0/0
WEBS 3-12=0/273, 3-11=-738/190, 5-11=0/664, 5-9=-1079/236

NOTES
1) Wind: ASCE 7-16; Vult=130mph (3-second gust) Vasd=103mph; TCDL=6.0psf; BCDL=6.0psf; h=25ft; Cat. II; Exp B; Enclosed; MWFRS (envelope) exterior zone and C-C Exterior(2E) -0-10-8 to 2-1-8, Interior (1) 2-1-8 to 18-6-0, Exterior(2E) 18-6-0 to 21-6-0 zone; cantilever left exposed ; end vertical left exposed;C-C for members and forces & MWFRS for reactions shown; Lumber DOL=1.60 plate grip DOL=1.60
2) TCLL: ASCE 7-16; Pr=20.0 psf (roof LL: Lum DOL=1.15 Plate DOL=1.15); Pf=20.0 psf (Lum DOL=1.15 Plate DOL=1.15); Is=1.0; Rough Cat B; Fully Exp.; Ce=0.9; Cs=1.00; Ct=1.10
3) Unbalanced snow loads have been considered for this design.
4) This truss has been designed for greater of min roof live load of 12.0 psf or 1.00 times flat roof load of 20.0 psf on overhangs non-concurrent with other live loads.
5) This truss has been designed for a 10.0 psf bottom chord live load nonconcurrent with any other live loads.
6) * This truss has been designed for a live load of 20.0psf on the bottom chord in all areas where a rectangle 3-06-00 tall by 2-00-00 wide will fit between the bottom chord and any other members, with BCDL = 10.0psf.
7) Refer to girder(s) for truss to truss connections.
8) Provide mechanical connection (by others) of truss to bearing plate capable of withstanding 241 lb uplift at joint 9.
9) One H2.5A Simpson Strong-Tie connectors recommended to connect truss to bearing walls due to UPLIFT at jt(s) 2. This connection is for uplift only and does not consider lateral forces.

LOAD CASE(S) Standard

March 3,2025

WARNING - Verify design parameters and READ NOTES ON THIS AND INCLUDED MITEK REFERENCE PAGE MII-7473 rev. 1/2/2023 BEFORE USE.
Design valid for use only with MiTek® connectors. This design is based only upon parameters shown, and is for an individual building component, not a truss system. Before use, the building designer must verify the applicability of design parameters and properly incorporate this design into the overall building design. Bracing indicated is to prevent buckling of individual truss web and/or chord members only. Additional temporary and permanent bracing is always required for stability and to prevent collapse with possible personal injury and property damage. For general guidance regarding the fabrication, storage, delivery, erection and bracing of trusses and truss systems, see **ANSI/TPI1 Quality Criteria and DSB-22** available from Truss Plate Institute (www.tpinst.org) and **BCSI Building Component Safety Information** available from the Structural Building Component Association (www.sbcacomponents.com)

ENGINEERING BY TRENCO A MiTek Affiliate
818 Soundside Road
Edenton, NC 27932

Job	Truss	Truss Type	Qty	Ply	48 Serenity-Roof-671 Capstone B TMB GLH
25020165-01	B2	Monopitch	4	1	I71710419 Job Reference (optional)

Carter Components (Sanford, NC), Sanford, NC - 27332, Run: 8.73 S Feb 19 2025 Print: 8.730 S Feb 19 2025 MiTek Industries, Inc. Thu Feb 27 15:30:25 Page: 1
ID:EaXCUrYboHwNc6HTuJMcHDzgvI2-RfC?PsB70Hq3NSgPqnL8w3uITXbGKWrCDoi7J4zJC?f

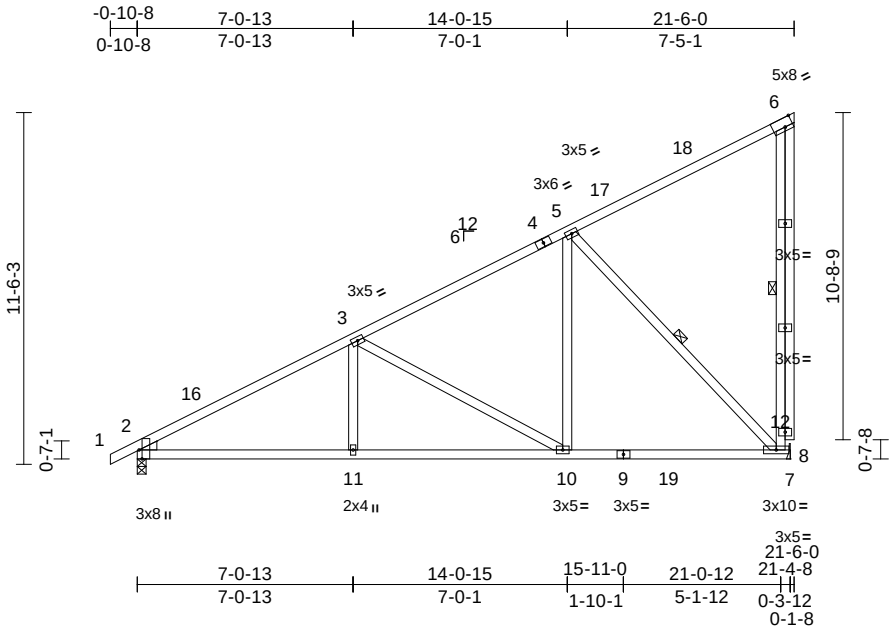

Scale = 1:75.4

Plate Offsets (X, Y): [2:0-3-8,Edge], [6:0-3-3,Edge]

Loading	(psf)	Spacing	2-0-0	CSI		DEFL	in	(loc)	l/defl	L/d	PLATES	GRIP
TCLL (roof)	20.0	Plate Grip DOL	1.15	TC	0.92	Vert(LL)	-0.10	8-10	>999	240	MT20	244/190
Snow (Pf)	20.0	Lumber DOL	1.15	BC	0.67	Vert(CT)	-0.17	8-10	>999	180		
TCDL	10.0	Rep Stress Incr	YES	WB	0.88	Horz(CT)	0.04	8	n/a	n/a		
BCLL	0.0*	Code	IRC2021/TPI2014	Matrix-MSH								
BCDL	10.0										Weight: 143 lb	FT = 20%

LUMBER

TOP CHORD	2x4 SP No.2
BOT CHORD	2x4 SP No.2
WEBS	2x4 SP No.3 *Except* 6-8:2x4 SP No.2
OTHERS	2x4 SP No.3
WEDGE	Left: 2x4 SP No.3

BRACING

TOP CHORD	Structural wood sheathing directly applied or 2-2-0 oc purlins, except end verticals.
BOT CHORD	Rigid ceiling directly applied or 9-11-5 oc bracing.
WEBS	1 Row at midpt 6-8, 5-8

REACTIONS (size) 2=0-3-8, 8= Mechanical
Max Horiz 2=403 (LC 14)
Max Uplift 2=-48 (LC 14), 8=-236 (LC 14)
Max Grav 2=973 (LC 5), 8=1091 (LC 5)

FORCES (lb) - Maximum Compression/Maximum Tension
TOP CHORD 1-2=0/23, 2-3=-1523/25, 3-5=-854/0, 5-6=-166/122, 6-8=-308/105
BOT CHORD 2-11=-331/1397, 10-11=-331/1397, 8-10=-165/751, 7-8=0/0
WEBS 3-11=0/273, 3-10=-735/189, 5-10=0/657, 5-8=-1067/234

NOTES

1) Wind: ASCE 7-16; Vult=130mph (3-second gust) Vasd=103mph; TCDL=6.0psf; BCDL=6.0psf; h=25ft; Cat. II; Exp B; Enclosed; MWFRS (envelope) exterior zone and C-C Exterior(2E) -0-10-8 to 2-1-8, Interior (1) 2-1-8 to 18-2-8, Exterior(2E) 18-2-8 to 21-2-8 zone; cantilever left exposed ; end vertical left exposed;C-C for members and forces & MWFRS for reactions shown; Lumber DOL=1.60 plate grip DOL=1.60
2) TCLL: ASCE 7-16; Pr=20.0 psf (roof LL: Lum DOL=1.15 Plate DOL=1.15); Pf=20.0 psf (Lum DOL=1.15 Plate DOL=1.15); Is=1.0; Rough Cat B; Fully Exp.; Ce=0.9; Cs=1.00; Ct=1.10
3) Unbalanced snow loads have been considered for this design.
4) This truss has been designed for greater of min roof live load of 12.0 psf or 1.00 times flat roof load of 20.0 psf on overhangs non-concurrent with other live loads.
5) This truss has been designed for a 10.0 psf bottom chord live load nonconcurrent with any other live loads.
6) * This truss has been designed for a live load of 20.0psf on the bottom chord in all areas where a rectangle 3-06-00 tall by 2-00-00 wide will fit between the bottom chord and any other members, with BCDL = 10.0psf.
7) Refer to girder(s) for truss to truss connections.
8) Provide mechanical connection (by others) of truss to bearing plate capable of withstanding 236 lb uplift at joint 8.
9) One H2.5A Simpson Strong-Tie connectors recommended to connect truss to bearing walls due to UPLIFT at jt(s) 2. This connection is for uplift only and does not consider lateral forces.

LOAD CASE(S) Standard

March 3,2025

WARNING - Verify design parameters and READ NOTES ON THIS AND INCLUDED MITEK REFERENCE PAGE MII-7473 rev. 1/2/2023 BEFORE USE.
Design valid for use only with MiTek® connectors. This design is based only upon parameters shown, and is for an individual building component, not a truss system. Before use, the building designer must verify the applicability of design parameters and properly incorporate this design into the overall building design. Bracing indicated is to prevent buckling of individual truss web and/or chord members only. Additional temporary and permanent bracing is always required for stability and to prevent collapse with possible personal injury and property damage. For general guidance regarding the fabrication, storage, delivery, erection and bracing of trusses and truss systems, see **ANSI/TPI1 Quality Criteria and DSB-22** available from Truss Plate Institute (www.tpinst.org) and **BCSI Building Component Safety Information** available from the Structural Building Component Association (www.sbcacomponents.com)

ENGINEERING BY TRENCO A MiTek Affiliate
818 Soundside Road
Edenton, NC 27932

Job	Truss	Truss Type	Qty	Ply	48 Serenity-Roof-671 Capstone B TMB GLH
25020165-01	B3	Monopitch Supported Gable	1	1	I71710420 Job Reference (optional)

Carter Components (Sanford, NC), Sanford, NC - 27332,

Run: 8.73 S Feb 19 2025 Print: 8.730 S Feb 19 2025 MiTek Industries, Inc. Thu Feb 27 15:30:25 Page: 1
ID:EVQVDbjxpNM0Sf4Pv18gXuzgvJ6-RfC?PsB70Hq3NSgPqnL8w3uITXbGKWrCDoi7J4zJC?f

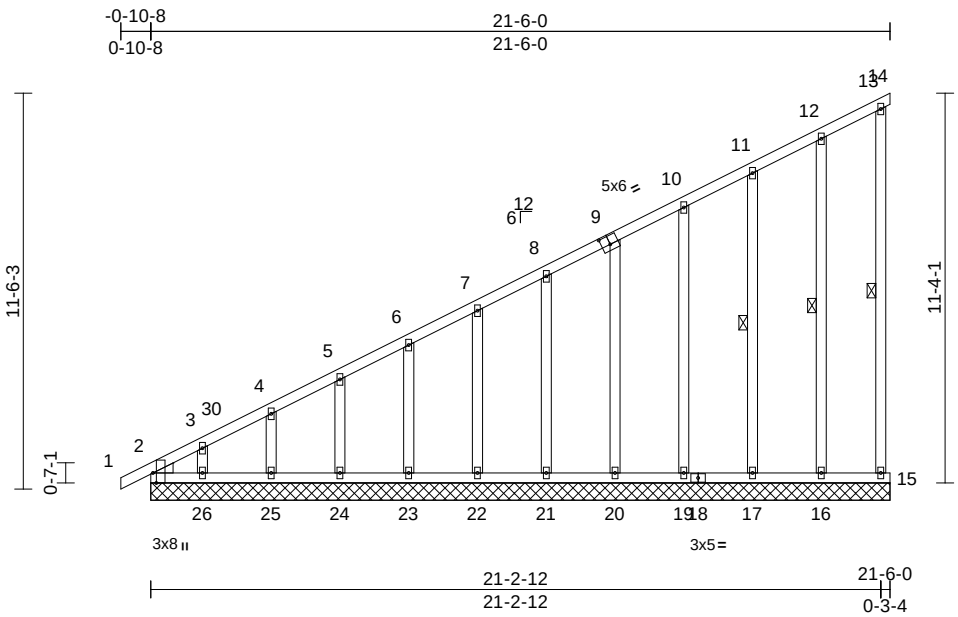

Scale = 1:67

Plate Offsets (X, Y): [2:0-3-8,Edge], [9:0-3-0,0-3-0]

Loading	(psf)	Spacing	1-11-4	CSI		DEFL	in	(loc)	l/defl	L/d	PLATES	GRIP
TCLL (roof)	20.0	Plate Grip DOL	1.15	TC	0.08	Vert(LL)	n/a	-	n/a	999	MT20	244/190
Snow (Pf)	20.0	Lumber DOL	1.15	BC	0.05	Vert(CT)	n/a	-	n/a	999		
TCDL	10.0	Rep Stress Incr	YES	WB	0.20	Horz(CT)	-0.01	14	n/a	n/a		
BCLL	0.0*	Code	IRC2021/TPI2014	Matrix-MSH								
BCDL	10.0										Weight: 165 lb	FT = 20%

LUMBER

TOP CHORD 2x4 SP No.2
BOT CHORD 2x4 SP No.2
WEBS 2x4 SP No.2
OTHERS 2x4 SP No.3
WEDGE Left: 2x4 SP No.3

BRACING

TOP CHORD Structural wood sheathing directly applied or 6-0-0 oc purlins, except end verticals.
BOT CHORD Rigid ceiling directly applied or 10-0-0 oc bracing.
WEBS 1 Row at midpt 13-15, 12-16, 11-17

REACTIONS (size) 2=21-6-0, 14=21-6-0, 15=21-6-0, 16=21-6-0, 17=21-6-0, 19=21-6-0, 20=21-6-0, 21=21-6-0, 22=21-6-0, 23=21-6-0, 24=21-6-0, 25=21-6-0, 26=21-6-0
Max Horiz 2=395 (LC 14)
Max Uplift 14=-9 (LC 14), 15=-15 (LC 14), 16=-41 (LC 14), 17=-43 (LC 14), 19=-46 (LC 14), 20=-43 (LC 14), 21=-36 (LC 14), 22=-44 (LC 14), 23=-41 (LC 14), 24=-45 (LC 14), 25=-31 (LC 14), 26=-126 (LC 14)
Max Grav 2=238 (LC 14), 14=24 (LC 21), 15=81 (LC 21), 16=231 (LC 21), 17=233 (LC 21), 19=200 (LC 21), 20=154 (LC 1), 21=146 (LC 21), 22=157 (LC 1), 23=155 (LC 21), 24=154 (LC 1), 25=160 (LC 21), 26=129 (LC 1)

FORCES (lb) - Maximum Compression/Maximum Tension

TOP CHORD 1-2=0/23, 2-3=-481/193, 3-4=-418/170, 4-5=-375/153, 5-6=-331/135, 6-7=-288/118, 7-8=-243/100, 8-10=-202/83, 10-11=-114/49, 11-12=-70/41, 12-13=-45/22, 13-14=-6/9, 13-15=-68/26
BOT CHORD 2-26=-154/67, 25-26=-3/4, 24-25=-3/4, 23-24=-3/4, 22-23=-3/4, 21-22=-3/4, 20-21=-3/4, 19-20=0/0, 17-19=0/0, 16-17=0/0, 15-16=0/0
WEBS 12-16=-192/75, 11-17=-194/75, 10-19=-161/79, 9-20=-122/76, 8-21=-112/67, 7-22=-125/77, 6-23=-122/74, 5-24=-122/75, 4-25=-125/73, 3-26=-115/130

NOTES

1) Wind: ASCE 7-16; Vult=130mph (3-second gust) Vasd=103mph; TCDL=6.0psf; BCDL=6.0psf; h=25ft; Cat. II; Exp B; Enclosed; MWFRS (envelope) exterior zone and C-C Corner(3E) -0-10-8 to 2-1-8, Exterior(2N) 2-1-8 to 21-6-0 zone; cantilever left exposed ; end vertical left exposed;C-C for members and forces & MWFRS for reactions shown; Lumber DOL=1.60 plate grip DOL=1.60
2) Truss designed for wind loads in the plane of the truss only. For studs exposed to wind (normal to the face), see Standard Industry Gable End Details as applicable, or consult qualified building designer as per ANSI/TPI 1.
3) TCLL: ASCE 7-16; Pr=20.0 psf (roof LL: Lum DOL=1.15 Plate DOL=1.15); Pf=20.0 psf (Lum DOL=1.15 Plate DOL=1.15); Is=1.0; Rough Cat B; Fully Exp.; Ce=0.9; Cs=1.00; Ct=1.10
4) Unbalanced snow loads have been considered for this design.
5) This truss has been designed for greater of min roof live load of 12.0 psf or 1.00 times flat roof load of 20.0 psf on overhangs non-concurrent with other live loads.
6) All plates are 2x4 MT20 unless otherwise indicated.
7) Gable requires continuous bottom chord bearing.
8) Gable studs spaced at 2-0-0 oc.
9) This truss has been designed for a 10.0 psf bottom chord live load nonconcurrent with any other live loads.
10) * This truss has been designed for a live load of 20.0psf on the bottom chord in all areas where a rectangle 3-06-00 tall by 2-00-00 wide will fit between the bottom chord and any other members.
11) Bearing at joint(s) 14 considers parallel to grain value using ANSI/TPI 1 angle to grain formula. Building designer should verify capacity of bearing surface.
12) Provide mechanical connection (by others) of truss to bearing plate capable of withstanding 9 lb uplift at joint 14, 15 lb uplift at joint 15, 41 lb uplift at joint 16, 43 lb uplift at joint 17, 46 lb uplift at joint 19, 43 lb uplift at joint 20, 36 lb uplift at joint 21, 44 lb uplift at joint 22, 41 lb uplift at joint 23, 45 lb uplift at joint 24, 31 lb uplift at joint 25 and 126 lb uplift at joint 26.

LOAD CASE(S) Standard

March 3,2025

WARNING - Verify design parameters and READ NOTES ON THIS AND INCLUDED MITEK REFERENCE PAGE MII-7473 rev. 1/2/2023 BEFORE USE.
Design valid for use only with MiTek® connectors. This design is based only upon parameters shown, and is for an individual building component, not a truss system. Before use, the building designer must verify the applicability of design parameters and properly incorporate this design into the overall building design. Bracing indicated is to prevent buckling of individual truss web and/or chord members only. Additional temporary and permanent bracing is always required for stability and to prevent collapse with possible personal injury and property damage. For general guidance regarding the fabrication, storage, delivery, erection and bracing of trusses and truss systems, see **ANSI/TPI1 Quality Criteria and DSB-22** available from Truss Plate Institute (www.tpinst.org) and **BCSI Building Component Safety Information** available from the Structural Building Component Association (www.sbcacomponents.com)

ENGINEERING BY TRENCO A MiTek Affiliate
818 Soundside Road
Edenton, NC 27932

Job	Truss	Truss Type	Qty	Ply	48 Serenity-Roof-671 Capstone B TMB GLH
25020165-01	C1	Common	1	1	I71710421 Job Reference (optional)

Carter Components (Sanford, NC), Sanford, NC - 27332,

Run: 8.73 S Feb 19 2025 Print: 8.730 S Feb 19 2025 MiTek Industries, Inc. Thu Feb 27 15:30:25 Page: 1
ID:tG5Bb4S8_da8pGPAcPlWeFzgvJS-RfC?PsB70Hq3NSgPqnL8w3uITXbGKWrCDoi7J4zJC?f

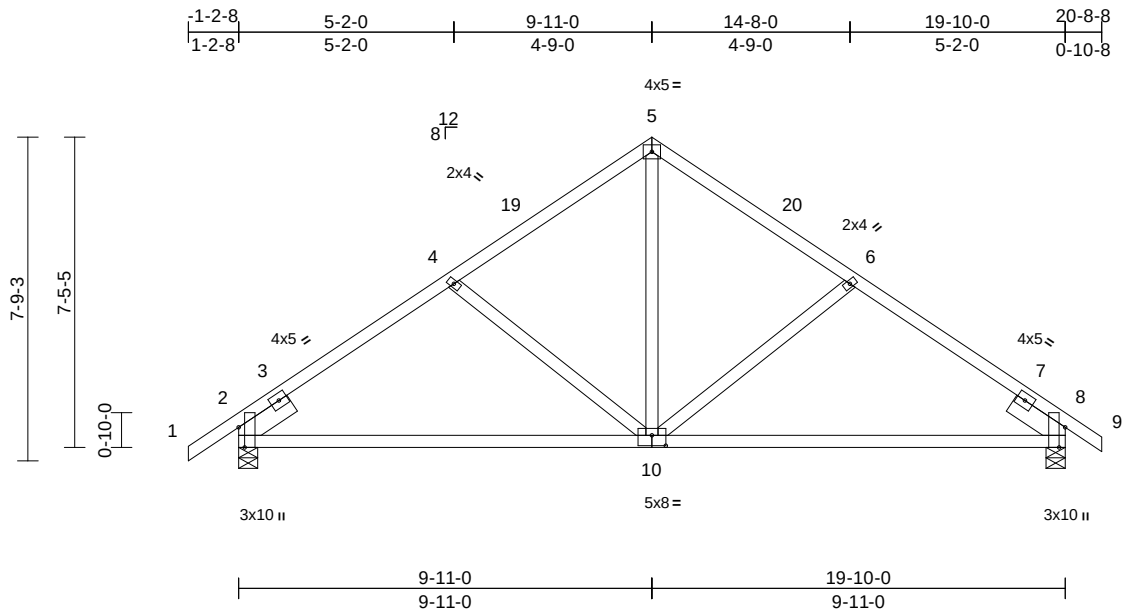

Scale = 1:55.3

Plate Offsets (X, Y): [2:0-5-13,Edge], [8:0-5-13,Edge], [10:0-4-0,0-3-0]

Loading	(psf)	Spacing	2-0-0	CSI		DEFL	in	(loc)	l/defl	L/d	PLATES	GRIP
TCLL (roof)	20.0	Plate Grip DOL	1.15	TC	0.53	Vert(LL)	-0.12	10-17	>999	240	MT20	244/190
Snow (Pf)	20.0	Lumber DOL	1.15	BC	0.78	Vert(CT)	-0.25	10-17	>968	180		
TCDL	10.0	Rep Stress Incr	YES	WB	0.26	Horz(CT)	0.03	8	n/a	n/a		
BCLL	0.0*	Code	IRC2021/TPI2014	Matrix-MSH								
BCDL	10.0										Weight: 104 lb	FT = 20%

LUMBER

TOP CHORD	2x4 SP No.2
BOT CHORD	2x4 SP No.2
WEBS	2x4 SP No.3
SLIDER	Left 2x6 SP No.2 -- 1-6-0, Right 2x6 SP No.2 -- 1-6-0

BRACING

TOP CHORD	Structural wood sheathing directly applied or 5-3-1 oc purlins.
BOT CHORD	Rigid ceiling directly applied or 10-0-0 oc bracing.

REACTIONS (size) 2=0-5-8, 8=0-5-8
Max Horiz 2=172 (LC 13)
Max Uplift 2=-90 (LC 14), 8=-83 (LC 15)
Max Grav 2=922 (LC 21), 8=901 (LC 22)

FORCES (lb) - Maximum Compression/Maximum Tension

TOP CHORD	1-2=0/40, 2-4=-1089/142, 4-5=-849/138, 5-6=-850/138, 6-8=-1092/144, 8-9=0/29
BOT CHORD	2-8=-186/858
WEBS	5-10=-31/561, 6-10=-346/180, 4-10=-342/178

NOTES

1) Unbalanced roof live loads have been considered for this design.
2) Wind: ASCE 7-16; Vult=130mph (3-second gust) Vasd=103mph; TCDL=6.0psf; BCDL=6.0psf; h=25ft; Cat. II; Exp B; Enclosed; MWFRS (envelope) exterior zone and C-C Exterior(2E) -1-2-8 to 1-9-8, Interior (1) 1-9-8 to 6-11-0, Exterior(2R) 6-11-0 to 12-11-0, Interior (1) 12-11-0 to 17-8-8, Exterior(2E) 17-8-8 to 20-8-8 zone; cantilever left and right exposed ; end vertical left and right exposed;C-C for members and forces & MWFRS for reactions shown; Lumber DOL=1.60 plate grip DOL=1.60
3) TCLL: ASCE 7-16; Pr=20.0 psf (roof LL: Lum DOL=1.15 Plate DOL=1.15); Pf=20.0 psf (Lum DOL=1.15 Plate DOL=1.15); Is=1.0; Rough Cat B; Fully Exp.; Ce=0.9; Cs=1.00; Ct=1.10
4) Unbalanced snow loads have been considered for this design.
5) This truss has been designed for greater of min roof live load of 12.0 psf or 1.00 times flat roof load of 20.0 psf on overhangs non-concurrent with other live loads.
6) This truss has been designed for a 10.0 psf bottom chord live load nonconcurrent with any other live loads.
7) * This truss has been designed for a live load of 20.0psf on the bottom chord in all areas where a rectangle 3-06-00 tall by 2-00-00 wide will fit between the bottom chord and any other members.
8) One H2.5A Simpson Strong-Tie connectors recommended to connect truss to bearing walls due to UPLIFT at jt(s) 2 and 8. This connection is for uplift only and does not consider lateral forces.

LOAD CASE(S) Standard

March 3,2025

WARNING - Verify design parameters and READ NOTES ON THIS AND INCLUDED MITEK REFERENCE PAGE MII-7473 rev. 1/2/2023 BEFORE USE.
Design valid for use only with MiTek® connectors. This design is based only upon parameters shown, and is for an individual building component, not a truss system. Before use, the building designer must verify the applicability of design parameters and properly incorporate this design into the overall building design. Bracing indicated is to prevent buckling of individual truss web and/or chord members only. Additional temporary and permanent bracing is always required for stability and to prevent collapse with possible personal injury and property damage. For general guidance regarding the fabrication, storage, delivery, erection and bracing of trusses and truss systems, see **ANSI/TPI1 Quality Criteria and DSB-22** available from Truss Plate Institute (www.tpinst.org) and **BCSI Building Component Safety Information** available from the Structural Building Component Association (www.sbcacomponents.com)

ENGINEERING BY TRENCO A MiTek Affiliate
818 Soundside Road
Edenton, NC 27932

Job	Truss	Truss Type	Qty	Ply	48 Serenity-Roof-671 Capstone B TMB GLH
25020165-01	C1SGE	Common Structural Gable	1	1	I71710422 Job Reference (optional)

Carter Components (Sanford, NC), Sanford, NC - 27332,

Run: 8.73 S Feb 19 2025 Print: 8.730 S Feb 19 2025 MiTek Industries, Inc. Thu Feb 27 15:30:25 Page: 1
ID:HU8BO1TiIQFm_g7QpBHHJyzgvKk-RfC?PsB70Hq3NSgPqnL8w3uITXbGKWrCDoi7J4zJC?f

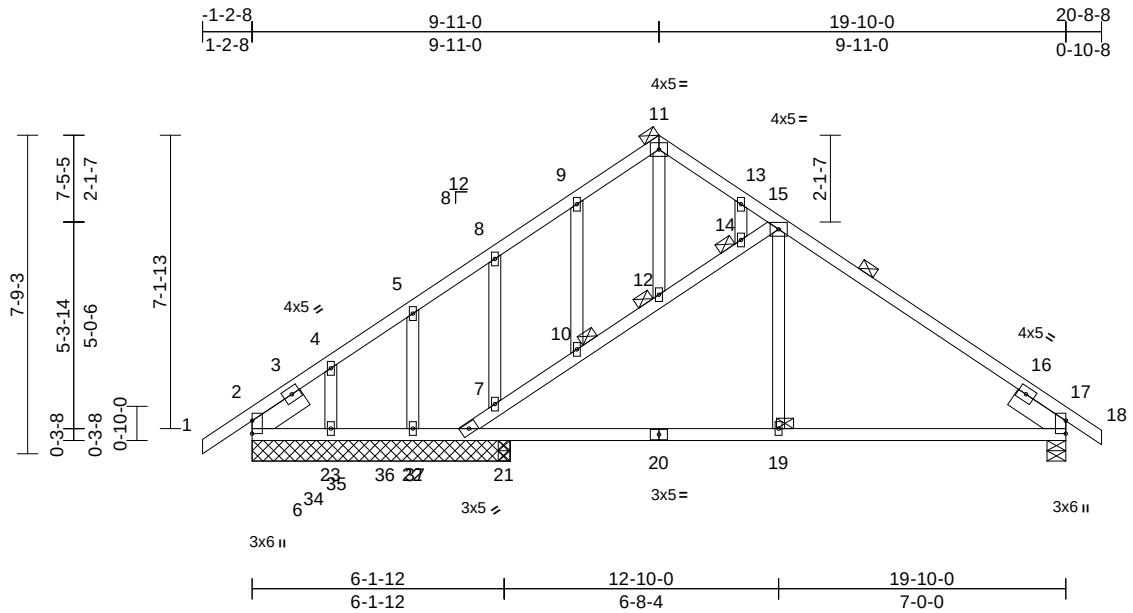

Scale = 1:56.2

Plate Offsets (X, Y): [2:Edge,0-0-0], [17:Edge,0-0-0]

Loading	(psf)	Spacing	2-0-0	CSI		DEFL	in	(loc)	l/defl	L/d	PLATES	GRIP
TCLL (roof)	20.0	Plate Grip DOL	1.15	TC	0.62	Vert(LL)	-0.05	6-28	>524	240	MT20	244/190
Snow (Pf)	20.0	Lumber DOL	1.15	BC	0.59	Vert(CT)	-0.08	6-28	>306	180		
TCDL	10.0	Rep Stress Incr	YES	WB	0.04	Horz(CT)	0.00	6	n/a	n/a		
BCLL	0.0*	Code	IRC2021/TPI2014	Matrix-MSH								
BCDL	10.0										Weight: 122 lb	FT = 20%

LUMBER

TOP CHORD	2x4 SP No.2
BOT CHORD	2x4 SP No.2
WEBS	2x4 SP No.3
OTHERS	2x4 SP No.3
SLIDER	Left 2x6 SP No.2 -- 1-6-0, Right 2x6 SP No.2 -- 1-6-0

BRACING

TOP CHORD	Structural wood sheathing directly applied or 6-0-0 oc purlins.
BOT CHORD	Rigid ceiling directly applied or 6-0-0 oc bracing.
JOINTS	1 Brace at Jt(s): 11, 12, 10, 14

REACTIONS (size) 2=6-3-8, 6=6-3-8, 17=0-5-8, 21=0-3-8, 22=6-3-8, 23=6-3-8
Max Horiz 2=117 (LC 14)
Max Uplift 6=-44 (LC 14), 17=-17 (LC 15), 21=-76 (LC 14), 22=-81 (LC 14), 23=-114 (LC 40)
Max Grav 2=157 (LC 1), 6=279 (LC 40), 17=88 (LC 43), 21=340 (LC 40), 22=467 (LC 40), 23=-7 (LC 14)

FORCES (lb) - Maximum Compression/Maximum Tension

TOP CHORD 1-2=0/40, 2-4=-75/48, 4-5=-71/47, 5-8=-72/41, 8-9=-1/16, 9-11=-3/0, 11-13=-1/6, 13-15=-1/8, 15-17=-13/61, 17-18=0/50, 6-7=-454/68, 7-10=-3/9, 10-12=-3/19, 12-14=-3/16, 14-15=-4/18

BOT CHORD 2-23=-20/26, 22-23=-20/26, 6-22=-56/436, 6-21=-20/31, 19-21=-20/31, 17-19=-36/31

WEBS 11-12=0/6, 9-10=-31/2, 7-8=-73/44, 5-22=-163/58, 4-23=-3/32, 13-14=-5/1, 15-19=-15/2

NOTES

1) Unbalanced roof live loads have been considered for this design.
2) Wind: ASCE 7-16; Vult=130mph (3-second gust) Vasd=103mph; TCDL=6.0psf; BCDL=6.0psf; h=25ft; Cat. II; Exp B; Enclosed; MWFRS (envelope) exterior zone and C-C Exterior(2E) -1-2-8 to 1-11-0, Interior (1) 1-11-0 to 2-11-0, Exterior(2R) 2-11-0 to 5-11-0, Exterior(2E) 19-10-0 to 20-8-8 zone; cantilever left and right exposed ; end vertical left and right exposed;C-C for members and forces & MWFRS for reactions shown; Lumber DOL=1.60 plate grip DOL=1.60
3) Truss designed for wind loads in the plane of the truss only. For studs exposed to wind (normal to the face), see Standard Industry Gable End Details as applicable, or consult qualified building designer as per ANSI/TPI 1.
4) TCLL: ASCE 7-16; Pr=20.0 psf (roof LL: Lum DOL=1.15 Plate DOL=1.15); Pf=20.0 psf (Lum DOL=1.15 Plate DOL=1.15); Is=1.0; Rough Cat B; Fully Exp.; Ce=0.9; Cs=1.00; Ct=1.10
5) Unbalanced snow loads have been considered for this design.
6) This truss has been designed for greater of min roof live load of 12.0 psf or 1.00 times flat roof load of 20.0 psf on overhangs non-concurrent with other live loads.
7) All plates are 2x4 MT20 unless otherwise indicated.
8) Gable studs spaced at 2-0-0 oc.
9) This truss has been designed for a 10.0 psf bottom chord live load nonconcurrent with any other live loads.
10) * This truss has been designed for a live load of 20.0psf on the bottom chord in all areas where a rectangle 3-06-00 tall by 2-00-00 wide will fit between the bottom chord and any other members.
11) Provide mechanical connection (by others) of truss to bearing plate capable of withstanding 44 lb uplift at joint 6.
12) N/A
13) H10A Simpson Strong-Tie connectors recommended to connect truss to bearing walls due to UPLIFT at jt(s) 21. This connection is for uplift only and does not consider lateral forces.
14) Graphical purlin representation does not depict the size or the orientation of the purlin along the top and/or bottom chord.

LOAD CASE(S) Standard

March 3,2025

WARNING - Verify design parameters and READ NOTES ON THIS AND INCLUDED MITEK REFERENCE PAGE MII-7473 rev. 1/2/2023 BEFORE USE.
Design valid for use only with MiTek® connectors. This design is based only upon parameters shown, and is for an individual building component, not a truss system. Before use, the building designer must verify the applicability of design parameters and properly incorporate this design into the overall building design. Bracing indicated is to prevent buckling of individual truss web and/or chord members only. Additional temporary and permanent bracing is always required for stability and to prevent collapse with possible personal injury and property damage. For general guidance regarding the fabrication, storage, delivery, erection and bracing of trusses and truss systems, see **ANSI/TPI1 Quality Criteria and DSB-22** available from Truss Plate Institute (www.tpinst.org) and **BCSI Building Component Safety Information** available from the Structural Building Component Association (www.sbcacomponents.com)

ENGINEERING BY TRENCO A MiTek Affiliate
818 Soundside Road
Edenton, NC 27932

Job	Truss	Truss Type	Qty	Ply	48 Serenity-Roof-671 Capstone B TMB GLH
25020165-01	C2	Common	3	1	I71710423 Job Reference (optional)

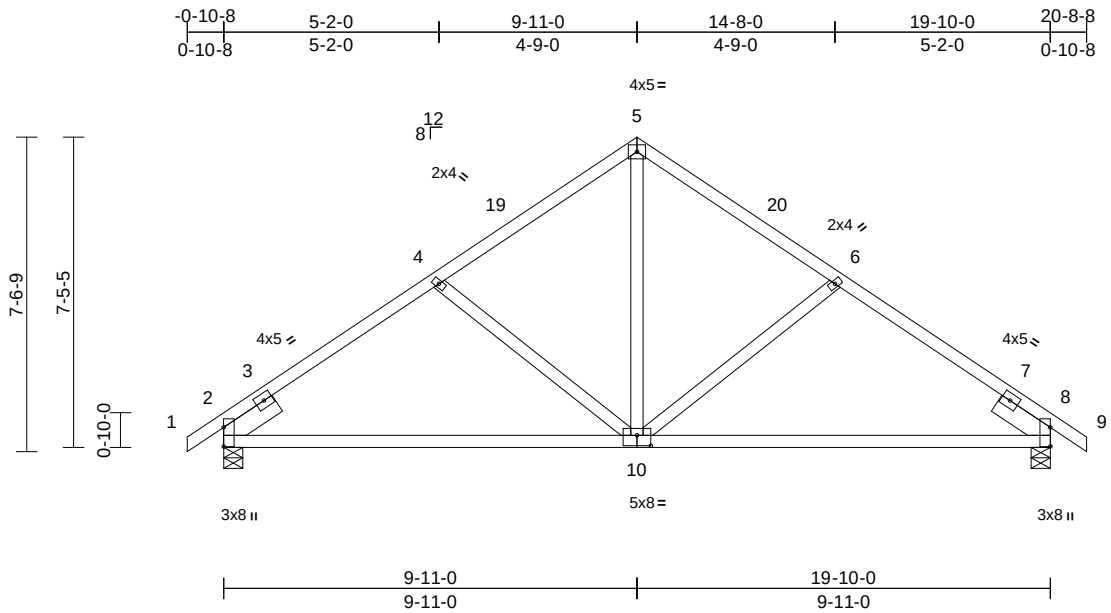

Scale = 1:55.3

Plate Offsets (X, Y): [2:Edge,0-0-0], [8:Edge,0-0-0], [10:0-4-0,0-3-0]

Loading	(psf)	Spacing	2-0-0	CSI		DEFL	in	(loc)	l/defl	L/d	PLATES	GRIP
TCLL (roof)	20.0	Plate Grip DOL	1.15	TC	0.53	Vert(LL)	-0.12	10-17	>999	240	MT20	244/190
Snow (Pf)	20.0	Lumber DOL	1.15	BC	0.78	Vert(CT)	-0.25	10-17	>971	180		
TCDL	10.0	Rep Stress Incr	YES	WB	0.26	Horz(CT)	0.03	8	n/a	n/a		
BCLL	0.0*	Code	IRC2021/TPI2014	Matrix-MSH								
BCDL	10.0										Weight: 103 lb	FT = 20%

LUMBER

TOP CHORD	2x4 SP No.2
BOT CHORD	2x4 SP No.2
WEBS	2x4 SP No.3
SLIDER	Left 2x6 SP No.2 -- 1-6-0, Right 2x6 SP No.2 -- 1-6-0

BRACING

TOP CHORD	Structural wood sheathing directly applied or 5-3-6 oc purlins.
BOT CHORD	Rigid ceiling directly applied or 10-0-0 oc bracing.

REACTIONS (size) 2=0-5-8, 8=0-5-8
Max Horiz 2=169 (LC 13)
Max Uplift 2=-84 (LC 14), 8=-84 (LC 15)
Max Grav 2=901 (LC 21), 8=901 (LC 22)

FORCES (lb) - Maximum Compression/Maximum Tension

TOP CHORD	1-2=0/29, 2-4=-1093/145, 4-5=-851/140, 5-6=-851/140, 6-8=-1093/145, 8-9=0/29
BOT CHORD	2-8=-191/859
WEBS	5-10=-33/563, 6-10=-346/180, 4-10=-346/179

NOTES

1) Unbalanced roof live loads have been considered for this design.
2) Wind: ASCE 7-16; Vult=130mph (3-second gust) Vasd=103mph; TCDL=6.0psf; BCDL=6.0psf; h=25ft; Cat. II; Exp B; Enclosed; MWFRS (envelope) exterior zone and C-C Exterior(2E) -0-10-8 to 2-1-8, Interior (1) 2-1-8 to 6-11-0, Exterior(2R) 6-11-0 to 12-11-0, Interior (1) 12-11-0 to 17-8-8, Exterior(2E) 17-8-8 to 20-8-8 zone; cantilever left and right exposed ; end vertical left and right exposed;C-C for members and forces & MWFRS for reactions shown; Lumber DOL=1.60 plate grip DOL=1.60
3) TCLL: ASCE 7-16; Pr=20.0 psf (roof LL: Lum DOL=1.15 Plate DOL=1.15); Pf=20.0 psf (Lum DOL=1.15 Plate DOL=1.15); Is=1.0; Rough Cat B; Fully Exp.; Ce=0.9; Cs=1.00; Ct=1.10
4) Unbalanced snow loads have been considered for this design.
5) This truss has been designed for greater of min roof live load of 12.0 psf or 1.00 times flat roof load of 20.0 psf on overhangs non-concurrent with other live loads.
6) This truss has been designed for a 10.0 psf bottom chord live load nonconcurrent with any other live loads.
7) * This truss has been designed for a live load of 20.0psf on the bottom chord in all areas where a rectangle 3-06-00 tall by 2-00-00 wide will fit between the bottom chord and any other members.
8) One H2.5A Simpson Strong-Tie connectors recommended to connect truss to bearing walls due to UPLIFT at jt(s) 2 and 8. This connection is for uplift only and does not consider lateral forces.

LOAD CASE(S) Standard

March 3,2025

WARNING - Verify design parameters and READ NOTES ON THIS AND INCLUDED MITEK REFERENCE PAGE MII-7473 rev. 1/2/2023 BEFORE USE.
Design valid for use only with MiTek® connectors. This design is based only upon parameters shown, and is for an individual building component, not a truss system. Before use, the building designer must verify the applicability of design parameters and properly incorporate this design into the overall building design. Bracing indicated is to prevent buckling of individual truss web and/or chord members only. Additional temporary and permanent bracing is always required for stability and to prevent collapse with possible personal injury and property damage. For general guidance regarding the fabrication, storage, delivery, erection and bracing of trusses and truss systems, see **ANSI/TPI1 Quality Criteria and DSB-22** available from Truss Plate Institute (www.tpinst.org) and **BCSI Building Component Safety Information** available from the Structural Building Component Association (www.sbcacomponents.com)

ENGINEERING BY TRENCO A MiTek Affiliate
818 Soundside Road
Edenton, NC 27932

Job	Truss	Truss Type	Qty	Ply	48 Serenity-Roof-671 Capstone B TMB GLH
25020165-01	C3	Common	2	1	I71710424 Job Reference (optional)

Carter Components (Sanford, NC), Sanford, NC - 27332, Run: 8.73 S Feb 19 2025 Print: 8.730 S Feb 19 2025 MiTek Industries, Inc. Thu Feb 27 15:30:25 Page: 1
ID:HcMBLrVXsSbyofndo4w8iVzgvR8-RfC?PsB70Hq3NSgPqnL8w3uITXbGKWrCDoi7J4zJC?f

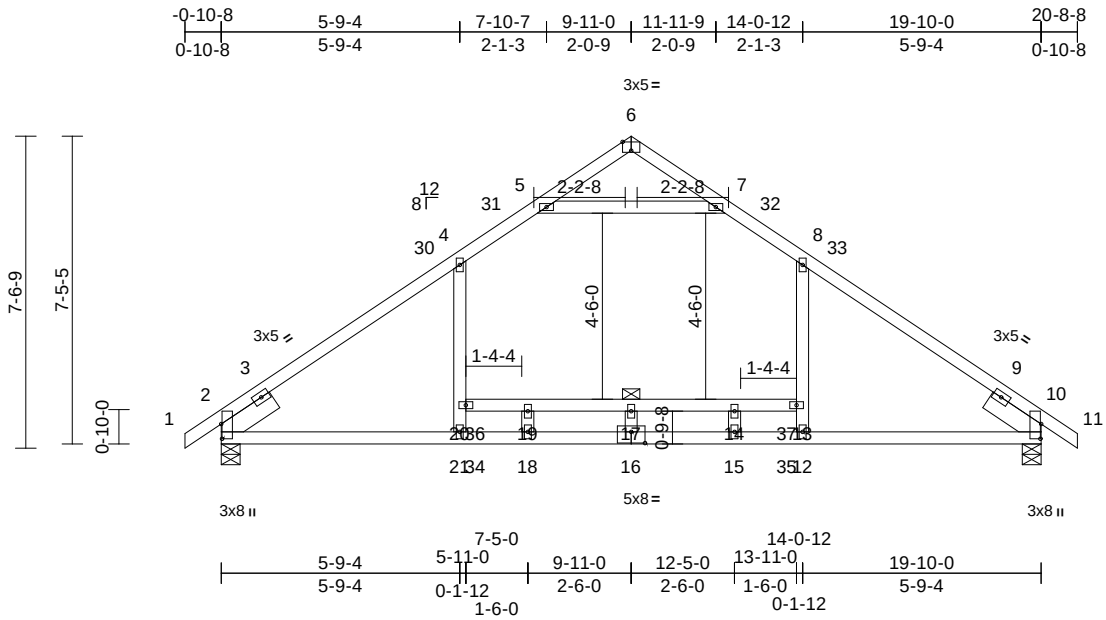

Scale = 1:55.7

Plate Offsets (X, Y): [2:0-4-5,0-0-4], [6:0-2-8,Edge], [10:0-4-5,0-0-4], [16:0-4-0,0-3-4]

Loading	(psf)	Spacing	2-0-0	CSI		DEFL	in	(loc)	l/defl	L/d	PLATES	GRIP
TCLL (roof)	20.0	Plate Grip DOL	1.15	TC	0.79	Vert(LL)	-0.39	16	>616	240	MT20	244/190
Snow (Pf)	20.0	Lumber DOL	1.15	BC	0.83	Vert(CT)	-0.72	16	>330	180		
TCDL	10.0	Rep Stress Incr	YES	WB	0.77	Horz(CT)	0.05	2	n/a	n/a		
BCLL	0.0*	Code	IRC2021/TPI2014	Matrix-MSH								
BCDL	10.0										Weight: 109 lb	FT = 20%

LUMBER

TOP CHORD 2x4 SP 2400F 2.0E
BOT CHORD 2x4 SP 2400F 2.0E *Except* 20-13:2x4 SP No.2
WEBS 2x4 SP No.3
SLIDER Left 2x6 SP No.2 -- 1-6-0, Right 2x6 SP No.2 -- 1-6-0

BRACING

TOP CHORD Structural wood sheathing directly applied or 4-11-11 oc purlins.
BOT CHORD Rigid ceiling directly applied or 6-0-0 oc bracing.

REACTIONS (size) 2=0-5-8, 10=0-5-8
Max Horiz 2=169 (LC 13)
Max Grav 2=1282 (LC 25), 10=1282 (LC 26)

FORCES (lb) - Maximum Compression/Maximum Tension

TOP CHORD 1-2=0/29, 2-4=-1822/112, 4-5=-1282/3, 5-6=0/389, 6-7=0/389, 7-8=-1282/3, 8-10=-1822/81, 10-11=0/29
BOT CHORD 2-21=-33/1344, 18-21=0/1496, 15-18=0/1496, 12-15=0/1496, 10-12=0/1344, 19-20=-186/0, 17-19=-186/0, 14-17=-186/0, 13-14=-186/0
WEBS 20-21=0/667, 4-20=0/775, 12-13=0/667, 8-13=0/775, 5-7=-1870/0, 16-17=0/21, 18-19=-164/34, 14-15=-164/34

NOTES

1) Unbalanced roof live loads have been considered for this design.
2) Wind: ASCE 7-16; Vult=130mph (3-second gust) Vasd=103mph; TCDL=6.0psf; BCDL=6.0psf; h=25ft; Cat. II; Exp B; Enclosed; MWFRS (envelope) exterior zone and C-C Exterior(2E) -0-10-8 to 2-1-8, Interior (1) 2-1-8 to 6-11-0, Exterior(2R) 6-11-0 to 12-11-0, Interior (1) 12-11-0 to 17-8-8, Exterior(2E) 17-8-8 to 20-8-8 zone; cantilever left and right exposed ; end vertical left and right exposed;C-C for members and forces & MWFRS for reactions shown; Lumber DOL=1.60 plate grip DOL=1.60
3) TCLL: ASCE 7-16; Pr=20.0 psf (roof LL: Lum DOL=1.15 Plate DOL=1.15); Pf=20.0 psf (Lum DOL=1.15 Plate DOL=1.15); Is=1.0; Rough Cat B; Fully Exp.; Ce=0.9; Cs=1.00; Ct=1.10
4) Unbalanced snow loads have been considered for this design.
5) This truss has been designed for greater of min roof live load of 12.0 psf or 1.00 times flat roof load of 20.0 psf on overhangs non-concurrent with other live loads.
6) 200.0lb AC unit load placed on the bottom chord, 9-11-0 from left end, supported at two points, 5-0-0 apart.
7) All plates are 2x4 MT20 unless otherwise indicated.
8) This truss has been designed for a 10.0 psf bottom chord live load nonconcurrent with any other live loads.
9) * This truss has been designed for a live load of 20.0psf on the bottom chord in all areas where a rectangle 3-06-00 tall by 2-00-00 wide will fit between the bottom chord and any other members, with BCDL = 10.0psf.

LOAD CASE(S) Standard

March 3,2025

WARNING - Verify design parameters and READ NOTES ON THIS AND INCLUDED MITEK REFERENCE PAGE MII-7473 rev. 1/2/2023 BEFORE USE.
Design valid for use only with MiTek® connectors. This design is based only upon parameters shown, and is for an individual building component, not a truss system. Before use, the building designer must verify the applicability of design parameters and properly incorporate this design into the overall building design. Bracing indicated is to prevent buckling of individual truss web and/or chord members only. Additional temporary and permanent bracing is always required for stability and to prevent collapse with possible personal injury and property damage. For general guidance regarding the fabrication, storage, delivery, erection and bracing of trusses and truss systems, see **ANSI/TPI1 Quality Criteria and DSB-22** available from Truss Plate Institute (www.tpinst.org) and **BCSI Building Component Safety Information** available from the Structural Building Component Association (www.sbcacomponents.com)

ENGINEERING BY TRENCO A MiTek Affiliate
818 Soundside Road
Edenton, NC 27932

Job	Truss	Truss Type	Qty	Ply	48 Serenity-Roof-671 Capstone B TMB GLH
25020165-01	C4	Common	7	1	I71710425 Job Reference (optional)

Carter Components (Sanford, NC), Sanford, NC - 27332,

Run: 8.73 S Feb 19 2025 Print: 8.730 S Feb 19 2025 MiTek Industries, Inc. Thu Feb 27 15:30:25 Page: 1
ID:HkbBIfYLPUx7cfRpn_Z_41zgvXY-RfC?PsB70Hq3NSgPqnL8w3uITXbGKWrCDoi7J4zJC?f

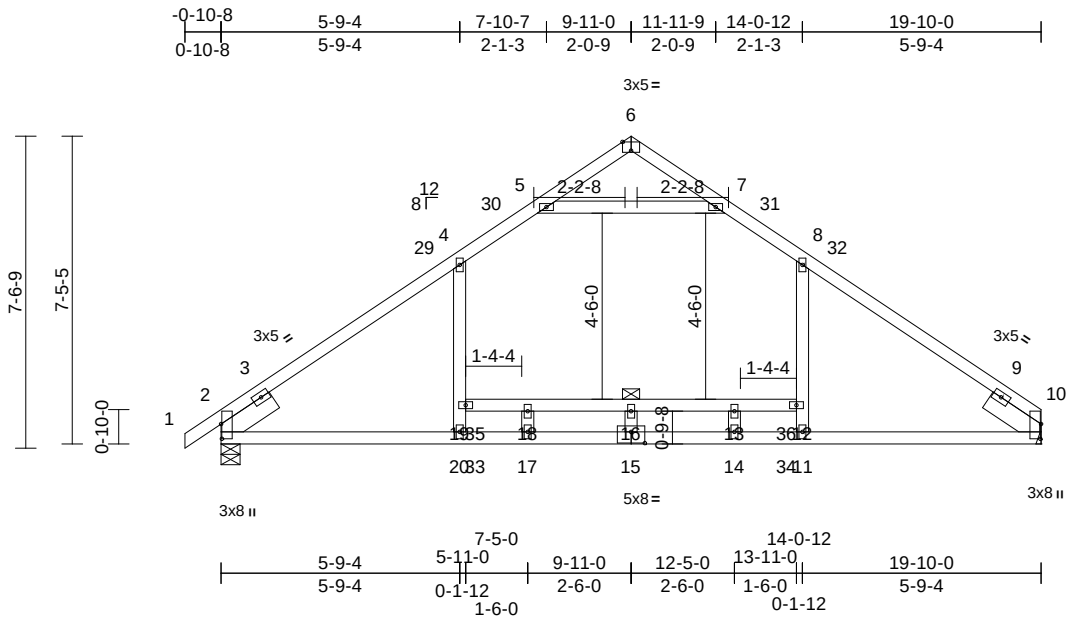

Scale = 1:55.7

Plate Offsets (X, Y): [2:0-4-5,0-0-4], [6:0-2-8,Edge], [10:0-4-5,0-0-4], [15:0-4-0,0-3-4]

Loading	(psf)	Spacing	2-0-0	CSI		DEFL	in	(loc)	l/defl	L/d	PLATES	GRIP
TCLL (roof)	20.0	Plate Grip DOL	1.15	TC	0.80	Vert(LL)	-0.39	15	>616	240	MT20	244/190
Snow (Pf)	20.0	Lumber DOL	1.15	BC	0.83	Vert(CT)	-0.72	15	>330	180		
TCDL	10.0	Rep Stress Incr	YES	WB	0.77	Horz(CT)	0.05	2	n/a	n/a		
BCLL	0.0*	Code	IRC2021/TPI2014	Matrix-MSH								
BCDL	10.0										Weight: 107 lb	FT = 20%

LUMBER

TOP CHORD 2x4 SP 2400F 2.0E
BOT CHORD 2x4 SP 2400F 2.0E *Except* 19-12:2x4 SP No.2
WEBS 2x4 SP No.3
SLIDER Left 2x6 SP No.2 -- 1-6-0, Right 2x6 SP No.2 -- 1-6-0

BRACING

TOP CHORD Structural wood sheathing directly applied or 4-11-9 oc purlins.
BOT CHORD Rigid ceiling directly applied or 6-0-0 oc bracing.

REACTIONS (size) 2=0-5-8, 10= Mechanical
Max Horiz 2=164 (LC 13)
Max Grav 2=1283 (LC 25), 10=1236 (LC 6)

FORCES (lb) - Maximum Compression/Maximum Tension
TOP CHORD 1-2=0/29, 2-4=-1824/113, 4-5=-1284/4, 5-6=0/390, 6-7=0/391, 7-8=-1283/4, 8-10=-1824/76
BOT CHORD 2-20=-41/1339, 17-20=0/1493, 14-17=0/1493, 11-14=0/1493, 10-11=0/1339, 18-19=-187/0, 16-18=-187/0, 13-16=-187/0, 12-13=-187/0
WEBS 19-20=0/668, 4-19=0/776, 5-7=-1874/0, 11-12=0/667, 8-12=0/776, 15-16=0/22, 13-14=-164/34, 17-18=-165/34

NOTES

1) Unbalanced roof live loads have been considered for this design.
2) Wind: ASCE 7-16; Vult=130mph (3-second gust) Vasd=103mph; TCDL=6.0psf; BCDL=6.0psf; h=25ft; Cat. II; Exp B; Enclosed; MWFRS (envelope) exterior zone and C-C Exterior(2E) -0-10-8 to 2-1-8, Interior (1) 2-1-8 to 6-11-0, Exterior(2R) 6-11-0 to 12-11-0, Interior (1) 12-11-0 to 16-10-0, Exterior(2E) 16-10-0 to 19-10-0 zone; cantilever left and right exposed ; end vertical left and right exposed;C-C for members and forces & MWFRS for reactions shown; Lumber DOL=1.60 plate grip DOL=1.60
3) TCLL: ASCE 7-16; Pr=20.0 psf (roof LL: Lum DOL=1.15 Plate DOL=1.15); Pf=20.0 psf (Lum DOL=1.15 Plate DOL=1.15); Is=1.0; Rough Cat B; Fully Exp.; Ce=0.9; Cs=1.00; Ct=1.10
4) Unbalanced snow loads have been considered for this design.
5) This truss has been designed for greater of min roof live load of 12.0 psf or 1.00 times flat roof load of 20.0 psf on overhangs non-concurrent with other live loads.
6) 200.0lb AC unit load placed on the bottom chord, 9-11-0 from left end, supported at two points, 5-0-0 apart.
7) All plates are 2x4 MT20 unless otherwise indicated.
8) This truss has been designed for a 10.0 psf bottom chord live load nonconcurrent with any other live loads.
9) * This truss has been designed for a live load of 20.0psf on the bottom chord in all areas where a rectangle 3-06-00 tall by 2-00-00 wide will fit between the bottom chord and any other members, with BCDL = 10.0psf.
10) Refer to girder(s) for truss to truss connections.

LOAD CASE(S) Standard

March 3,2025

WARNING - Verify design parameters and READ NOTES ON THIS AND INCLUDED MITEK REFERENCE PAGE MII-7473 rev. 1/2/2023 BEFORE USE.
Design valid for use only with MiTek® connectors. This design is based only upon parameters shown, and is for an individual building component, not a truss system. Before use, the building designer must verify the applicability of design parameters and properly incorporate this design into the overall building design. Bracing indicated is to prevent buckling of individual truss web and/or chord members only. Additional temporary and permanent bracing is always required for stability and to prevent collapse with possible personal injury and property damage. For general guidance regarding the fabrication, storage, delivery, erection and bracing of trusses and truss systems, see **ANSI/TPI1 Quality Criteria and DSB-22** available from Truss Plate Institute (www.tpinst.org) and **BCSI Building Component Safety Information** available from the Structural Building Component Association (www.sbcacomponents.com)

ENGINEERING BY TRENCO A MiTek Affiliate
818 Soundside Road
Edenton, NC 27932

Job	Truss	Truss Type	Qty	Ply	48 Serenity-Roof-671 Capstone B TMB GLH
25020165-01	C5	Hip	1	1	I71710426 Job Reference (optional)

Carter Components (Sanford, NC), Sanford, NC - 27332, Run: 8.73 S Feb 19 2025 Print: 8.730 S Feb 19 2025 MiTek Industries, Inc. Thu Feb 27 15:30:26 Page: 1

ID:HspBESaAzWHIQe50ltDrTazgvdy-RfC?PsB70Hq3NSgPqnL8w3uITXbGKWrCDoi7J4zJC?f

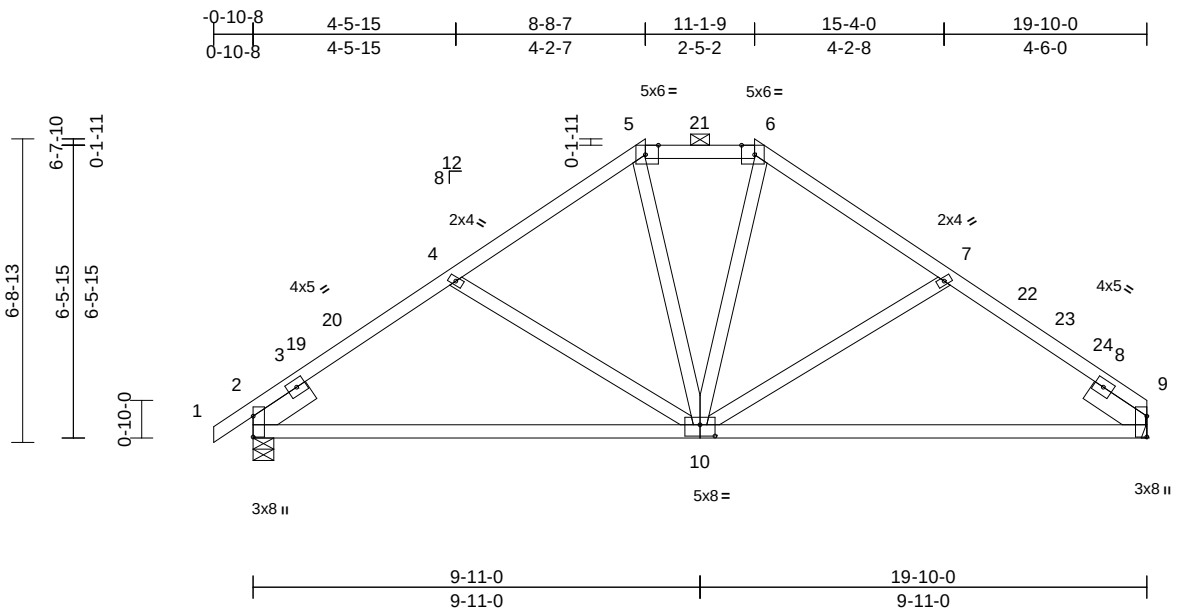

Scale = 1:51.1

Plate Offsets (X, Y): [2:Edge,0-0-0], [5:0-3-8,Edge], [6:0-3-8,Edge], [9:Edge,0-0-0], [10:0-4-0,0-3-0]

Loading	(psf)	Spacing	2-0-0	CSI		DEFL	in	(loc)	l/defl	L/d	PLATES	GRIP
TCLL (roof)	20.0	Plate Grip DOL	1.15	TC	0.39	Vert(LL)	-0.12	10-13	>999	240	MT20	244/190
Snow (Pf)	20.0	Lumber DOL	1.15	BC	0.77	Vert(CT)	-0.24	10-13	>999	180		
TCDL	10.0	Rep Stress Incr	YES	WB	0.27	Horz(CT)	0.03	9	n/a	n/a		
BCLL	0.0*	Code	IRC2021/TPI2014	Matrix-MSH								
BCDL	10.0										Weight: 110 lb	FT = 20%

LUMBER

TOP CHORD 2x4 SP No.2
BOT CHORD 2x4 SP No.2
WEBS 2x4 SP No.3
SLIDER Left 2x6 SP No.2 -- 1-6-0, Right 2x6 SP No.2 -- 1-6-0

BRACING

TOP CHORD Structural wood sheathing directly applied or 4-5-15 oc purlins, except 2-0-0 oc purlins (6-0-0 max.): 5-6.
BOT CHORD Rigid ceiling directly applied or 10-0-0 oc bracing.

REACTIONS (size) 2=0-5-8, 9= Mechanical
Max Horiz 2=144 (LC 13)
Max Uplift 2=-88 (LC 14), 9=-71 (LC 15)
Max Grav 2=1054 (LC 41), 9=1000 (LC 41)

FORCES (lb) - Maximum Compression/Maximum Tension
TOP CHORD 1-2=0/29, 2-4=-1311/158, 4-5=-1007/142, 5-6=-799/155, 6-7=-1008/143, 7-9=-1313/160
BOT CHORD 2-9=-188/1023
WEBS 5-10=-21/272, 6-10=-21/272, 7-10=-334/154, 4-10=-329/153

NOTES

1) Unbalanced roof live loads have been considered for this design.
2) Wind: ASCE 7-16; Vult=130mph (3-second gust) Vasd=103mph; TCDL=6.0psf; BCDL=6.0psf; h=25ft; Cat. II; Exp B; Enclosed; MWFRS (envelope) exterior zone and C-C Exterior(2E) -0-10-8 to 2-1-8, Interior (1) 2-1-8 to 4-4-5, Exterior(2R) 4-4-5 to 15-5-11, Interior (1) 15-5-11 to 16-10-0, Exterior(2E) 16-10-0 to 19-10-0 zone; cantilever left and right exposed ; end vertical left and right exposed;C-C for members and forces & MWFRS for reactions shown; Lumber DOL=1.60 plate grip DOL=1.60
3) TCLL: ASCE 7-16; Pr=20.0 psf (roof LL: Lum DOL=1.15 Plate DOL=1.15); Pf=20.0 psf (Lum DOL=1.15 Plate DOL=1.15); Is=1.0; Rough Cat B; Fully Exp.; Ce=0.9; Cs=1.00; Ct=1.10
4) Unbalanced snow loads have been considered for this design.
5) This truss has been designed for greater of min roof live load of 12.0 psf or 1.00 times flat roof load of 20.0 psf on overhangs non-concurrent with other live loads.
6) Provide adequate drainage to prevent water ponding.
7) This truss has been designed for a 10.0 psf bottom chord live load nonconcurrent with any other live loads.
8) * This truss has been designed for a live load of 20.0psf on the bottom chord in all areas where a rectangle 3-06-00 tall by 2-00-00 wide will fit between the bottom chord and any other members.
9) Refer to girder(s) for truss to truss connections.
10) Provide mechanical connection (by others) of truss to bearing plate capable of withstanding 71 lb uplift at joint 9.
11) One H2.5A Simpson Strong-Tie connectors recommended to connect truss to bearing walls due to UPLIFT at jt(s) 2. This connection is for uplift only and does not consider lateral forces.
12) Graphical purlin representation does not depict the size or the orientation of the purlin along the top and/or bottom chord.

LOAD CASE(S) Standard

March 3,2025

WARNING - Verify design parameters and READ NOTES ON THIS AND INCLUDED MITEK REFERENCE PAGE MII-7473 rev. 1/2/2023 BEFORE USE.
Design valid for use only with MiTek® connectors. This design is based only upon parameters shown, and is for an individual building component, not a truss system. Before use, the building designer must verify the applicability of design parameters and properly incorporate this design into the overall building design. Bracing indicated is to prevent buckling of individual truss web and/or chord members only. Additional temporary and permanent bracing is always required for stability and to prevent collapse with possible personal injury and property damage. For general guidance regarding the fabrication, storage, delivery, erection and bracing of trusses and truss systems, see **ANSI/TPI1 Quality Criteria and DSB-22** available from Truss Plate Institute (www.tpinst.org) and **BCSI Building Component Safety Information** available from the Structural Building Component Association (www.sbcacomponents.com)

ENGINEERING BY TRENCO A MiTek Affiliate
818 Soundside Road
Edenton, NC 27932

Job	Truss	Truss Type	Qty	Ply	48 Serenity-Roof-671 Capstone B TMB GLH
25020165-01	C6	Hip	1	1	I71710427 Job Reference (optional)

Carter Components (Sanford, NC), Sanford, NC - 27332, Run: 8.73 S Feb 19 2025 Print: 8.730 S Feb 19 2025 MiTek Industries, Inc. Thu Feb 27 15:30:26 Page: 1
ID:hdw2A2?3GmE6fGRoynMaWSzgvei-RfC?PsB70Hq3NSgPqnL8w3uITXbGKWrCDoi7J4zJC?f

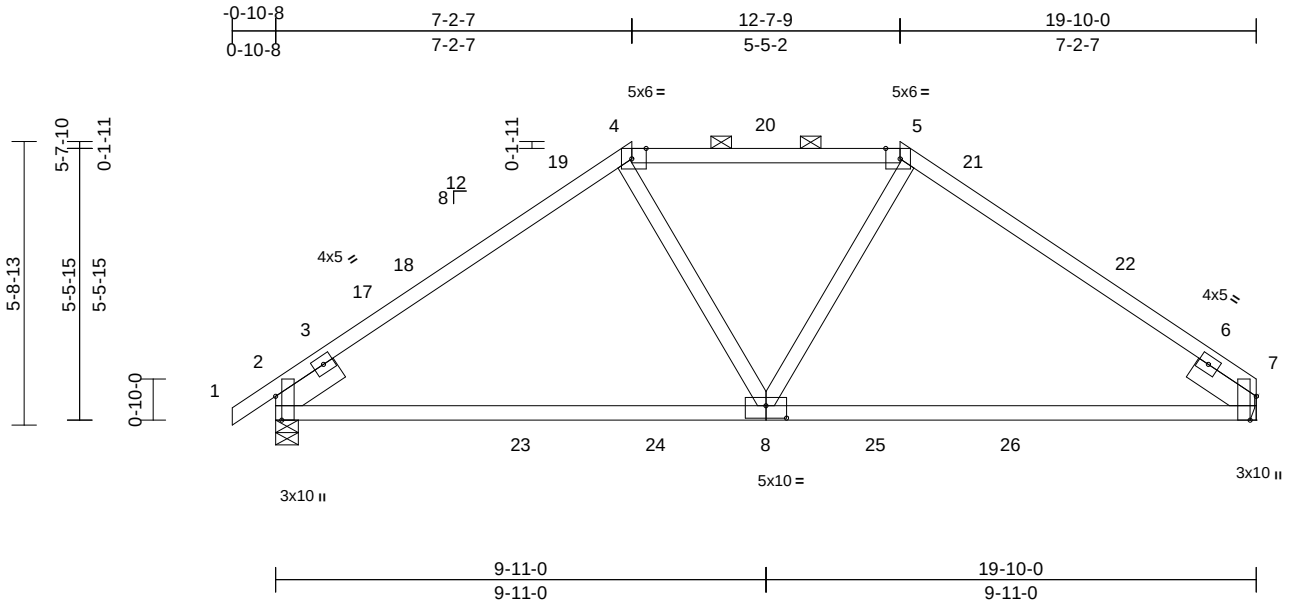

Scale = 1:46.6

Plate Offsets (X, Y): [2:0-5-13,Edge], [4:0-3-8,Edge], [5:0-3-8,Edge], [7:0-5-13,Edge], [8:0-5-0,0-3-0]

Loading	(psf)	Spacing	2-0-0	CSI		DEFL	in	(loc)	l/defl	L/d	PLATES	GRIP
TCLL (roof)	20.0	Plate Grip DOL	1.15	TC	0.78	Vert(LL)	-0.22	8-11	>999	240	MT20	244/190
Snow (Pf)	20.0	Lumber DOL	1.15	BC	0.84	Vert(CT)	-0.35	8-11	>675	180		
TCDL	10.0	Rep Stress Incr	YES	WB	0.13	Horz(CT)	0.05	2	n/a	n/a		
BCLL	0.0*	Code	IRC2021/TPI2014	Matrix-MSH								
BCDL	10.0										Weight: 89 lb	FT = 20%

LUMBER

TOP CHORD	2x4 SP No.1 *Except* 4-5:2x4 SP No.2
BOT CHORD	2x4 SP No.1
WEBS	2x4 SP No.3
SLIDER	Left 2x6 SP No.2 -- 1-6-0, Right 2x6 SP No.2 -- 1-6-0

BRACING

TOP CHORD	Structural wood sheathing directly applied or 3-5-6 oc purlins, except 2-0-0 oc purlins (4-7-14 max.): 4-5.
BOT CHORD	Rigid ceiling directly applied or 10-0-0 oc bracing.

REACTIONS (size) 2=0-5-8, 7= Mechanical
Max Horiz 2=120 (LC 13)
Max Uplift 2=-93 (LC 14), 7=-76 (LC 15)
Max Grav 2=1048 (LC 47), 7=1003 (LC 47)

FORCES (lb) - Maximum Compression/Maximum Tension
TOP CHORD 1-2=0/29, 2-4=-1251/164, 4-5=-1088/163, 5-7=-1252/164
BOT CHORD 2-7=-233/917
WEBS 4-8=0/323, 5-8=0/321

NOTES

1) Unbalanced roof live loads have been considered for this design.
2) Wind: ASCE 7-16; Vult=130mph (3-second gust) Vasd=103mph; TCDL=6.0psf; BCDL=6.0psf; h=25ft; Cat. II; Exp B; Enclosed; MWFRS (envelope) exterior zone and C-C Exterior(2E) -0-10-8 to 2-1-8, Interior (1) 2-1-8 to 2-11-8, Exterior(2R) 2-11-8 to 16-10-0, Exterior(2E) 16-10-0 to 19-10-0 zone; cantilever left and right exposed ; end vertical left and right exposed;C-C for members and forces & MWFRS for reactions shown; Lumber DOL=1.60 plate grip DOL=1.60
3) TCLL: ASCE 7-16; Pr=20.0 psf (roof LL: Lum DOL=1.15 Plate DOL=1.15); Pf=20.0 psf (Lum DOL=1.15 Plate DOL=1.15); Is=1.0; Rough Cat B; Fully Exp.; Ce=0.9; Cs=1.00; Ct=1.10
4) Unbalanced snow loads have been considered for this design.
5) This truss has been designed for greater of min roof live load of 12.0 psf or 1.00 times flat roof load of 20.0 psf on overhangs non-concurrent with other live loads.
6) Provide adequate drainage to prevent water ponding.
7) This truss has been designed for a 10.0 psf bottom chord live load nonconcurrent with any other live loads.
8) * This truss has been designed for a live load of 20.0psf on the bottom chord in all areas where a rectangle 3-06-00 tall by 2-00-00 wide will fit between the bottom chord and any other members, with BCDL = 10.0psf.
9) Refer to girder(s) for truss to truss connections.
10) Provide mechanical connection (by others) of truss to bearing plate capable of withstanding 76 lb uplift at joint 7.
11) One H2.5A Simpson Strong-Tie connectors recommended to connect truss to bearing walls due to UPLIFT at jt(s) 2. This connection is for uplift only and does not consider lateral forces.
12) Graphical purlin representation does not depict the size or the orientation of the purlin along the top and/or bottom chord.

LOAD CASE(S) Standard

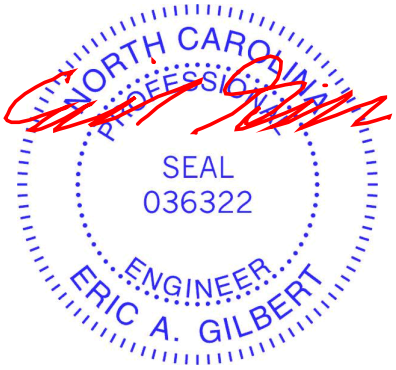

March 3,2025

WARNING - Verify design parameters and READ NOTES ON THIS AND INCLUDED MITEK REFERENCE PAGE MII-7473 rev. 1/2/2023 BEFORE USE.
Design valid for use only with MiTek® connectors. This design is based only upon parameters shown, and is for an individual building component, not a truss system. Before use, the building designer must verify the applicability of design parameters and properly incorporate this design into the overall building design. Bracing indicated is to prevent buckling of individual truss web and/or chord members only. Additional temporary and permanent bracing is always required for stability and to prevent collapse with possible personal injury and property damage. For general guidance regarding the fabrication, storage, delivery, erection and bracing of trusses and truss systems, see **ANSI/TPI1 Quality Criteria and DSB-22** available from Truss Plate Institute (www.tpinst.org) and **BCSI Building Component Safety Information** available from the Structural Building Component Association (www.sbcacomponents.com)

ENGINEERING BY TRENCO A MiTek Affiliate
818 Soundside Road
Edenton, NC 27932

Job	Truss	Truss Type	Qty	Ply	48 Serenity-Roof-671 Capstone B TMB GLH
25020165-01	C7	Hip	1	1	I71710428 Job Reference (optional)

Carter Components (Sanford, NC), Sanford, NC - 27332, Run: 8.73 S Feb 19 2025 Print: 8.730 S Feb 19 2025 MiTek Industries, Inc. Thu Feb 27 15:30:26 Page: 1
ID:wYNALhVj9sy3cpDjUzbkpbzgvfM-RfC?PsB70Hq3NSgPqnL8w3uITXbGKWrCDoi7J4zJC?f

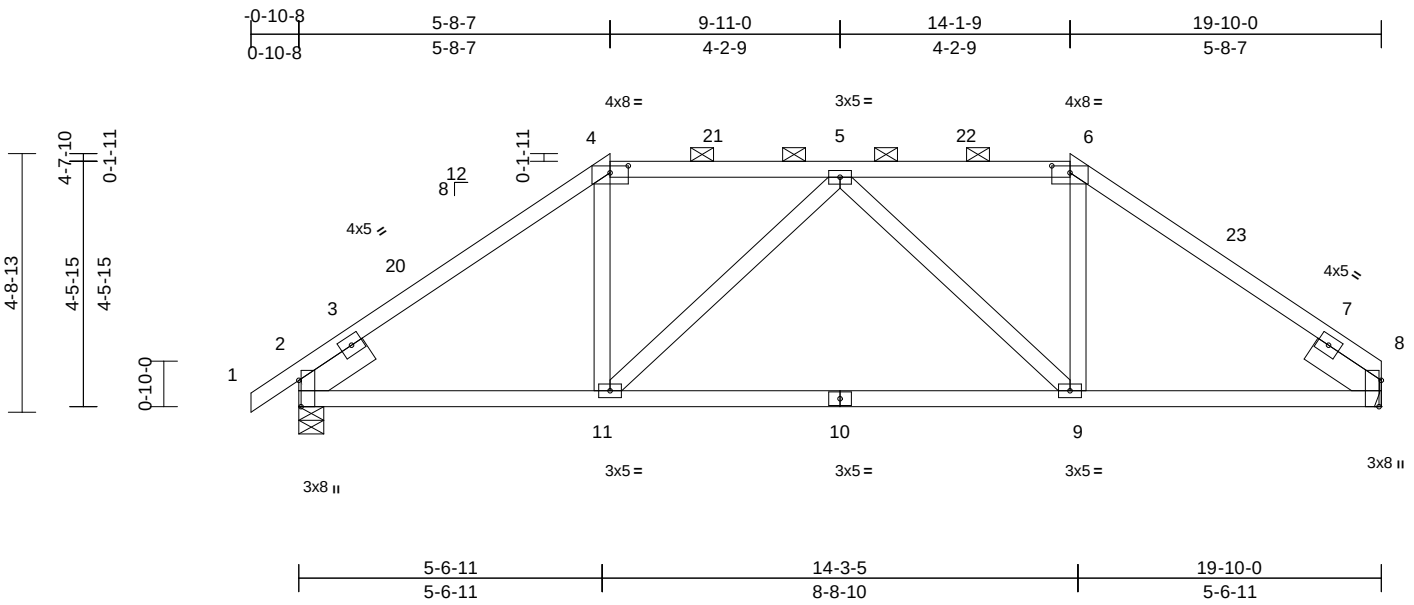

Scale = 1:42.2

Plate Offsets (X, Y): [2:0-5-13,Edge], [4:0-4-0,0-1-9], [6:0-4-0,0-1-9], [8:0-5-13,Edge]

Loading	(psf)	Spacing	2-0-0	CSI		DEFL	in	(loc)	l/defl	L/d	PLATES	GRIP
TCLL (roof)	20.0	Plate Grip DOL	1.15	TC	0.53	Vert(LL)	-0.15	9-11	>999	240	MT20	244/190
Snow (Pf)	20.0	Lumber DOL	1.15	BC	0.63	Vert(CT)	-0.31	9-11	>757	180		
TCDL	10.0	Rep Stress Incr	YES	WB	0.25	Horz(CT)	0.04	8	n/a	n/a		
BCLL	0.0*	Code	IRC2021/TPI2014	Matrix-MSH								
BCDL	10.0										Weight: 101 lb	FT = 20%

LUMBER

TOP CHORD	2x4 SP No.2
BOT CHORD	2x4 SP No.2
WEBS	2x4 SP No.3
SLIDER	Left 2x6 SP No.2 -- 1-6-0, Right 2x6 SP No.2 -- 1-6-0

BRACING

TOP CHORD	Structural wood sheathing directly applied or 4-4-14 oc purlins, except 2-0-0 oc purlins (5-11-3 max.): 4-6.
BOT CHORD	Rigid ceiling directly applied or 10-0-0 oc bracing.

REACTIONS (size) 2=0-5-8, 8= Mechanical
Max Horiz 2=97 (LC 13)
Max Uplift 2=-97 (LC 14), 8=-80 (LC 15)
Max Grav 2=945 (LC 41), 8=860 (LC 41)

FORCES (lb) - Maximum Compression/Maximum Tension

TOP CHORD	1-2=0/45, 2-4=-1136/143, 4-5=-862/162, 5-6=-867/160, 6-8=-1140/142
BOT CHORD	2-11=-152/872, 9-11=-94/1099, 8-9=-102/877
WEBS	4-11=0/369, 5-11=-352/143, 5-9=-349/143, 6-9=0/369

NOTES

1) Unbalanced roof live loads have been considered for this design.
2) Wind: ASCE 7-16; Vult=130mph (3-second gust) Vasd=103mph; TCDL=6.0psf; BCDL=6.0psf; h=25ft; Cat. II; Exp B; Enclosed; MWFRS (envelope) exterior zone and C-C Exterior(2E) -0-10-8 to 2-1-8, Exterior(2R) 2-1-8 to 16-10-0, Exterior(2E) 16-10-0 to 19-10-0 zone; cantilever left and right exposed ; end vertical left and right exposed;C-C for members and forces & MWFRS for reactions shown; Lumber DOL=1.60 plate grip DOL=1.60
3) TCLL: ASCE 7-16; Pr=20.0 psf (roof LL: Lum DOL=1.15 Plate DOL=1.15); Pf=20.0 psf (Lum DOL=1.15 Plate DOL=1.15); Is=1.0; Rough Cat B; Fully Exp.; Ce=0.9; Cs=1.00; Ct=1.10
4) Unbalanced snow loads have been considered for this design.
5) This truss has been designed for greater of min roof live load of 12.0 psf or 1.00 times flat roof load of 20.0 psf on overhangs non-concurrent with other live loads.
6) Provide adequate drainage to prevent water ponding.
7) This truss has been designed for a 10.0 psf bottom chord live load nonconcurrent with any other live loads.
8) * This truss has been designed for a live load of 20.0psf on the bottom chord in all areas where a rectangle 3-06-00 tall by 2-00-00 wide will fit between the bottom chord and any other members.
9) Refer to girder(s) for truss to truss connections.
10) Provide mechanical connection (by others) of truss to bearing plate capable of withstanding 80 lb uplift at joint 8.
11) One H2.5A Simpson Strong-Tie connectors recommended to connect truss to bearing walls due to UPLIFT at jt(s) 2. This connection is for uplift only and does not consider lateral forces.
12) Graphical purlin representation does not depict the size or the orientation of the purlin along the top and/or bottom chord.

LOAD CASE(S) Standard

March 3,2025

WARNING - Verify design parameters and READ NOTES ON THIS AND INCLUDED MITEK REFERENCE PAGE MII-7473 rev. 1/2/2023 BEFORE USE.
Design valid for use only with MiTek® connectors. This design is based only upon parameters shown, and is for an individual building component, not a truss system. Before use, the building designer must verify the applicability of design parameters and properly incorporate this design into the overall building design. Bracing indicated is to prevent buckling of individual truss web and/or chord members only. Additional temporary and permanent bracing is always required for stability and to prevent collapse with possible personal injury and property damage. For general guidance regarding the fabrication, storage, delivery, erection and bracing of trusses and truss systems, see **ANSI/TPI1 Quality Criteria and DSB-22** available from Truss Plate Institute (www.tpinst.org) and **BCSI Building Component Safety Information** available from the Structural Building Component Association (www.sbcacomponents.com)

ENGINEERING BY TRENCO A MiTek Affiliate
818 Soundside Road
Edenton, NC 27932

Job	Truss	Truss Type	Qty	Ply	48 Serenity-Roof-671 Capstone B TMB GLH
25020165-01	C8	Hip	1	1	I71710429 Job Reference (optional)

Carter Components (Sanford, NC), Sanford, NC - 27332,

Run: 8.73 S Feb 19 2025 Print: 8.730 S Feb 19 2025 MiTek Industries, Inc. Thu Feb 27 15:30:26 Page: 1
ID:SXEWRvs5PtORNqFkR2gYjdzgvgA-RfC?PsB70Hq3NSgPqnL8w3uITXbGKWrCDoi7J4zJC?f

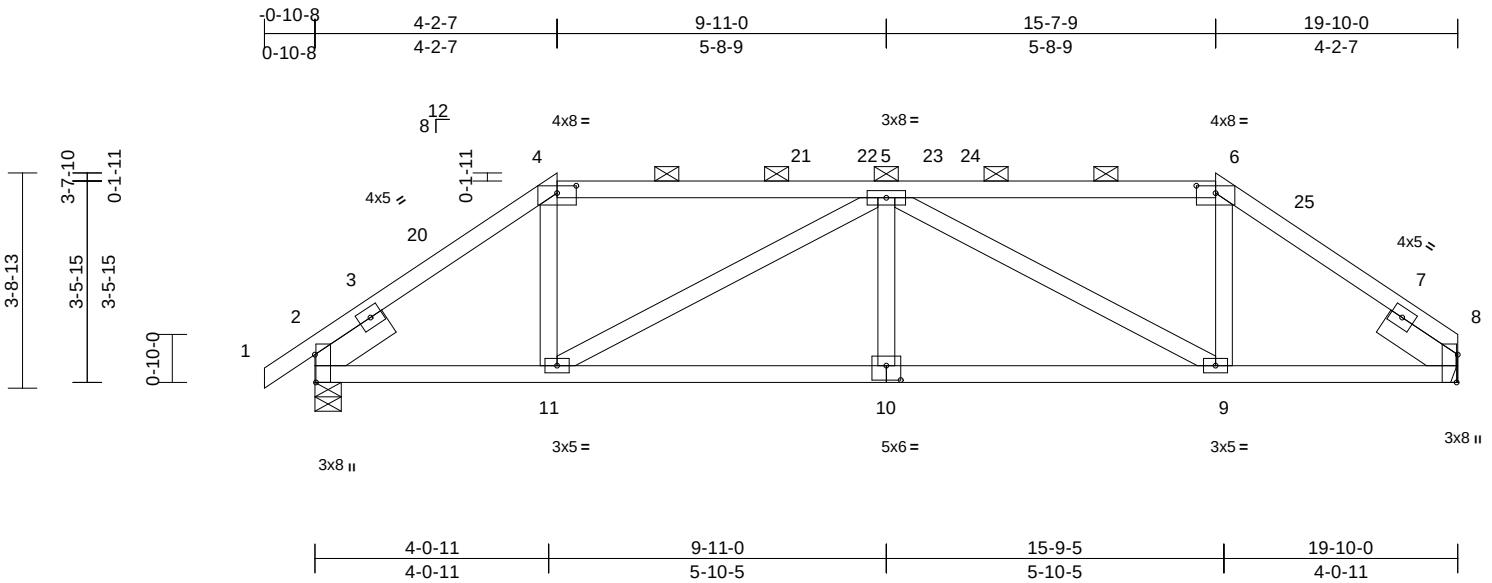

Scale = 1:40

Plate Offsets (X, Y): [2:0-5-13,Edge], [4:0-4-0,0-1-9], [6:0-4-0,0-1-9], [8:0-5-13,Edge], [10:0-3-0,0-3-0]

Loading	(psf)	Spacing	2-0-0	CSI		DEFL	in	(loc)	l/defl	L/d	PLATES	GRIP
TCLL (roof)	20.0	Plate Grip DOL	1.15	TC	0.74	Vert(LL)	-0.09	10-11	>999	240	MT20	244/190
Snow (Pf)	20.0	Lumber DOL	1.15	BC	0.75	Vert(CT)	-0.15	10-11	>999	180		
TCDL	10.0	Rep Stress Incr	YES	WB	0.70	Horz(CT)	0.05	8	n/a	n/a		
BCLL	0.0*	Code	IRC2021/TPI2014	Matrix-MSH								
BCDL	10.0										Weight: 103 lb	FT = 20%

LUMBER

TOP CHORD	2x4 SP No.2
BOT CHORD	2x4 SP No.2
WEBS	2x4 SP No.3
SLIDER	Left 2x6 SP No.2 -- 1-6-0, Right 2x6 SP No.2 -- 1-6-0

BRACING

TOP CHORD	Structural wood sheathing directly applied or 4-5-4 oc purlins, except 2-0-0 oc purlins (4-11-5 max.): 4-6.
BOT CHORD	Rigid ceiling directly applied or 10-0-0 oc bracing.

REACTIONS (size) 2=0-5-8, 8= Mechanical
Max Horiz 2=73 (LC 11)
Max Uplift 2=-100 (LC 14), 8=-83 (LC 15)
Max Grav 2=893 (LC 21), 8=862 (LC 40)

FORCES (lb) - Maximum Compression/Maximum Tension

TOP CHORD	1-2=0/45, 2-4=-1213/125, 4-5=-962/137, 5-6=-965/138, 6-8=-1216/123
BOT CHORD	2-11=-102/978, 9-11=-157/1690, 8-9=-66/981
WEBS	4-11=0/410, 5-11=-832/139, 5-10=0/263, 5-9=-829/139, 6-9=0/411

NOTES

1) Unbalanced roof live loads have been considered for this design.
2) Wind: ASCE 7-16; Vult=130mph (3-second gust) Vasd=103mph; TCDL=6.0psf; BCDL=6.0psf; h=25ft; Cat. II; Exp B; Enclosed; MWFRS (envelope) exterior zone and C-C Exterior(2E) -0-10-8 to 2-1-8, Exterior(2R) 2-1-8 to 8-5-6, Interior (1) 8-5-6 to 11-4-10, Exterior(2R) 11-4-10 to 16-10-0, Exterior(2E) 16-10-0 to 19-10-0 zone; cantilever left and right exposed ; end vertical left and right exposed;C-C for members and forces & MWFRS for reactions shown; Lumber DOL=1.60 plate grip DOL=1.60
3) TCLL: ASCE 7-16; Pr=20.0 psf (roof LL: Lum DOL=1.15 Plate DOL=1.15); Pf=20.0 psf (Lum DOL=1.15 Plate DOL=1.15); Is=1.0; Rough Cat B; Fully Exp.; Ce=0.9; Cs=1.00; Ct=1.10
4) Unbalanced snow loads have been considered for this design.
5) This truss has been designed for greater of min roof live load of 12.0 psf or 1.00 times flat roof load of 20.0 psf on overhangs non-concurrent with other live loads.
6) Provide adequate drainage to prevent water ponding.
7) This truss has been designed for a 10.0 psf bottom chord live load nonconcurrent with any other live loads.
8) * This truss has been designed for a live load of 20.0psf on the bottom chord in all areas where a rectangle 3-06-00 tall by 2-00-00 wide will fit between the bottom chord and any other members.
9) Refer to girder(s) for truss to truss connections.
10) Provide mechanical connection (by others) of truss to bearing plate capable of withstanding 83 lb uplift at joint 8.
11) One H2.5A Simpson Strong-Tie connectors recommended to connect truss to bearing walls due to UPLIFT at jt(s) 2. This connection is for uplift only and does not consider lateral forces.
12) Graphical purlin representation does not depict the size or the orientation of the purlin along the top and/or bottom chord.

LOAD CASE(S) Standard

March 3,2025

WARNING - Verify design parameters and READ NOTES ON THIS AND INCLUDED MITEK REFERENCE PAGE MII-7473 rev. 1/2/2023 BEFORE USE.
Design valid for use only with MiTek® connectors. This design is based only upon parameters shown, and is for an individual building component, not a truss system. Before use, the building designer must verify the applicability of design parameters and properly incorporate this design into the overall building design. Bracing indicated is to prevent buckling of individual truss web and/or chord members only. Additional temporary and permanent bracing is always required for stability and to prevent collapse with possible personal injury and property damage. For general guidance regarding the fabrication, storage, delivery, erection and bracing of trusses and truss systems, see **ANSI/TPI1 Quality Criteria and DSB-22** available from Truss Plate Institute (www.tpinst.org) and **BCSI Building Component Safety Information** available from the Structural Building Component Association (www.sbcacomponents.com)

ENGINEERING BY TRENCO A MiTek Affiliate
818 Soundside Road
Edenton, NC 27932

Job	Truss	Truss Type	Qty	Ply	48 Serenity-Roof-671 Capstone B TMB GLH
25020165-01	C9	Half Hip Girder	1	**2**	I71710430 Job Reference (optional)

Carter Components (Sanford, NC), Sanford, NC - 27332,

Run: 8.73 S Feb 19 2025 Print: 8.730 S Feb 19 2025 MiTek Industries, Inc. Thu Feb 27 15:30:27 Page: 1
ID:CB1Y8yWTYnPBZmGOREAWjDzgvhv-RfC?PsB70Hq3NSgPqnL8w3uITXbGKWrCDoi7J4zJC?f

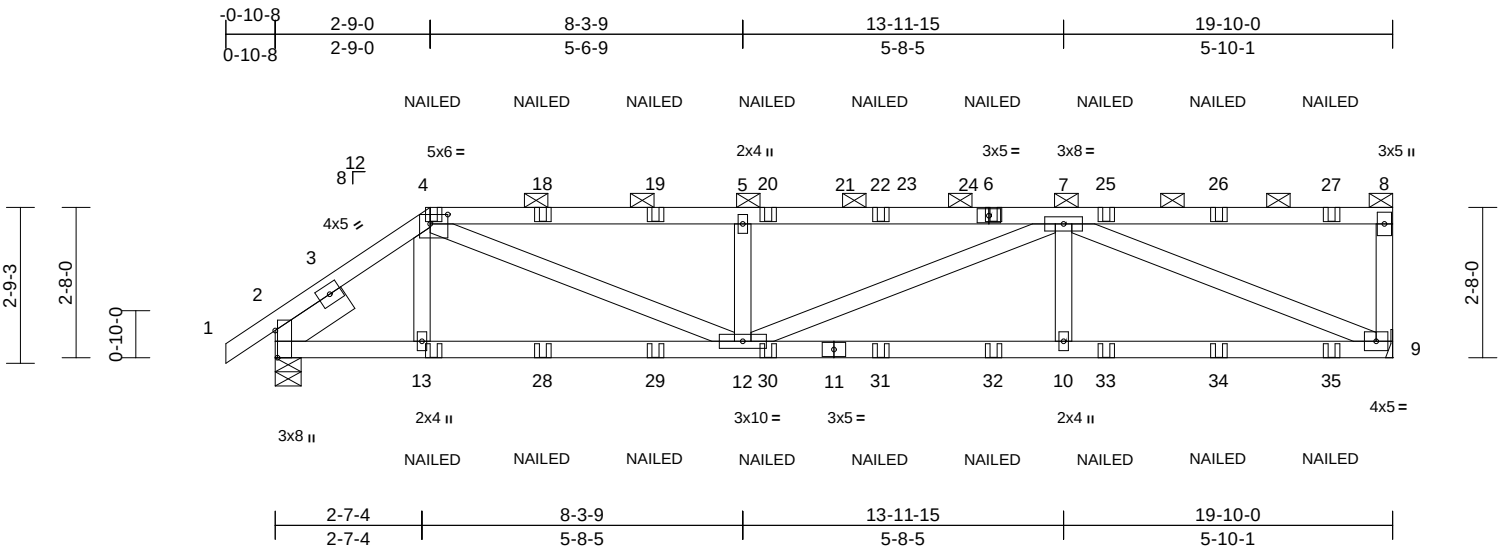

Scale = 1:40.9

Plate Offsets (X, Y): [2:0-5-13,Edge], [4:0-3-12,0-2-0]

Loading	(psf)	Spacing	1-11-4	CSI		DEFL	in	(loc)	l/defl	L/d	PLATES	GRIP
TCLL (roof)	20.0	Plate Grip DOL	1.15	TC	0.77	Vert(LL)	-0.12	10-12	>999	240	MT20	244/190
Snow (Pf)	20.0	Lumber DOL	1.15	BC	0.73	Vert(CT)	-0.19	10-12	>999	180		
TCDL	10.0	Rep Stress Incr	NO	WB	0.66	Horz(CT)	0.05	9	n/a	n/a		
BCLL	0.0*	Code	IRC2021/TPI2014	Matrix-MSH								
BCDL	10.0										Weight: 207 lb	FT = 20%

LUMBER
TOP CHORD 2x4 SP No.2
BOT CHORD 2x4 SP No.2
WEBS 2x4 SP No.3
SLIDER Left 2x6 SP No.2 -- 1-6-0

BRACING
TOP CHORD Structural wood sheathing directly applied or 6-0-0 oc purlins, except end verticals, and 2-0-0 oc purlins (4-8-11 max.): 4-8.
BOT CHORD Rigid ceiling directly applied or 10-0-0 oc bracing.

REACTIONS (size) 2=0-5-8, 9= Mechanical
Max Horiz 2=86 (LC 11)
Max Uplift 2=-291 (LC 12), 9=-329 (LC 9)
Max Grav 2=1758 (LC 33), 9=2006 (LC 33)

FORCES (lb) - Maximum Compression/Maximum Tension
TOP CHORD 1-2=0/44, 2-4=-2440/374, 4-5=-4218/689, 5-7=-4218/689, 7-8=-124/42, 8-9=-418/143
BOT CHORD 2-13=-346/1943, 12-13=-355/1945, 10-12=-613/3607, 9-10=-613/3607
WEBS 4-13=-31/213, 5-12=-935/336, 4-12=-432/2472, 7-12=-149/682, 7-10=0/448, 7-9=-3774/624

NOTES
1) 2-ply truss to be connected together with 10d (0.131"x3") nails as follows:
Top chords connected as follows: 2x4 - 1 row at 0-9-0 oc.
Bottom chords connected as follows: 2x4 - 1 row at 0-9-0 oc.
Web connected as follows: 2x4 - 1 row at 0-9-0 oc.
2) All loads are considered equally applied to all plies, except if noted as front (F) or back (B) face in the LOAD CASE(S) section. Ply to ply connections have been provided to distribute only loads noted as (F) or (B), unless otherwise indicated.
3) Unbalanced roof live loads have been considered for this design.
4) Wind: ASCE 7-16; Vult=130mph (3-second gust) Vasd=103mph; TCDL=6.0psf; BCDL=6.0psf; h=25ft; Cat. II; Exp B; Enclosed; MWFRS (envelope) exterior zone; cantilever left and right exposed ; end vertical left and right exposed; Lumber DOL=1.60 plate grip DOL=1.60
5) TCLL: ASCE 7-16; Pr=20.0 psf (roof LL: Lum DOL=1.15 Plate DOL=1.15); Pf=20.0 psf (Lum DOL=1.15 Plate DOL=1.15); Is=1.0; Rough Cat B; Fully Exp.; Ce=0.9; Cs=1.00; Ct=1.10
6) Unbalanced snow loads have been considered for this design.
7) This truss has been designed for greater of min roof live load of 12.0 psf or 1.00 times flat roof load of 20.0 psf on overhangs non-concurrent with other live loads.
8) Provide adequate drainage to prevent water ponding.
9) This truss has been designed for a 10.0 psf bottom chord live load nonconcurrent with any other live loads.
10) * This truss has been designed for a live load of 20.0psf on the bottom chord in all areas where a rectangle 3-06-00 tall by 2-00-00 wide will fit between the bottom chord and any other members.
11) Refer to girder(s) for truss to truss connections.
12) Provide mechanical connection (by others) of truss to bearing plate capable of withstanding 329 lb uplift at joint 9.
13) One H2.5A Simpson Strong-Tie connectors recommended to connect truss to bearing walls due to UPLIFT at jt(s) 2. This connection is for uplift only and does not consider lateral forces.
14) Graphical purlin representation does not depict the size or the orientation of the purlin along the top and/or bottom chord.
15) "NAILED" indicates 3-10d (0.148"x3") or 3-12d (0.148"x3.25") toe-nails per NDS guidlines.

LOAD CASE(S) Standard
1) Dead + Snow (balanced): Lumber Increase=1.15, Plate Increase=1.15
Uniform Loads (lb/ft)
Vert: 1-4=-58, 4-8=-58, 9-14=-19
Concentrated Loads (lb)
Vert: 6=-170 (F), 13=-56 (F), 4=-170 (F), 18=-170 (F), 19=-170 (F), 20=-170 (F), 22=-170 (F), 25=-170 (F), 26=-170 (F), 27=-171 (F), 28=-56 (F), 29=-56 (F), 30=-56 (F), 31=-56 (F), 32=-56 (F), 33=-56 (F), 34=-56 (F), 35=-56 (F)

March 3,2025

WARNING - Verify design parameters and READ NOTES ON THIS AND INCLUDED MITEK REFERENCE PAGE MII-7473 rev. 1/2/2023 BEFORE USE.
Design valid for use only with MiTek® connectors. This design is based only upon parameters shown, and is for an individual building component, not a truss system. Before use, the building designer must verify the applicability of design parameters and properly incorporate this design into the overall building design. Bracing indicated is to prevent buckling of individual truss web and/or chord members only. Additional temporary and permanent bracing is always required for stability and to prevent collapse with possible personal injury and property damage. For general guidance regarding the fabrication, storage, delivery, erection and bracing of trusses and truss systems, see **ANSI/TPI1 Quality Criteria and DSB-22** available from Truss Plate Institute (www.tpinst.org) and **BCSI Building Component Safety Information** available from the Structural Building Component Association (www.sbcacomponents.com)

ENGINEERING BY TRENCO A MiTek Affiliate
818 Soundside Road
Edenton, NC 27932

Job	Truss	Truss Type	Qty	Ply	48 Serenity-Roof-671 Capstone B TMB GLH
25020165-01	D1	Common	1	1	I71710431 Job Reference (optional)

Carter Components (Sanford, NC), Sanford, NC - 27332,

Run: 8.73 S Feb 19 2025 Print: 8.730 S Feb 19 2025 MiTek Industries, Inc. Thu Feb 27 15:30:27 Page: 1
ID:q87yp_egkLDYIYAMfPMOFqzgvj2-RfC?PsB70Hq3NSgPqnL8w3uITXbGKWrCDoi7J4zJC?f

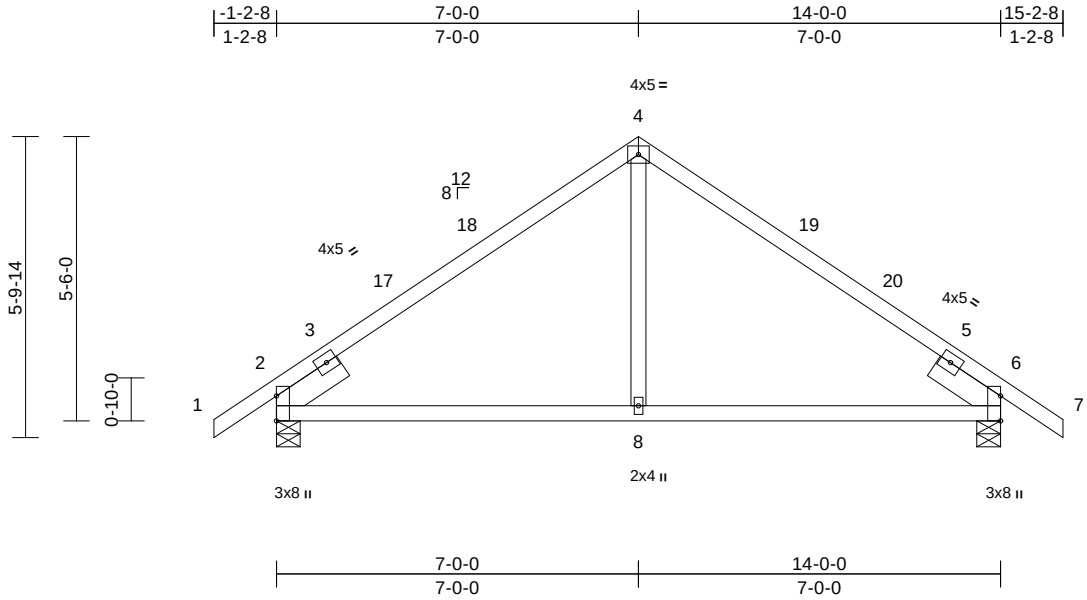

Scale = 1:44.6

Plate Offsets (X, Y): [2:Edge,0-0-0], [6:Edge,0-0-0]

Loading	(psf)	Spacing	2-0-0	CSI		DEFL	in	(loc)	l/defl	L/d	PLATES	GRIP
TCLL (roof)	20.0	Plate Grip DOL	1.15	TC	0.92	Vert(LL)	-0.10	8-11	>999	240	MT20	244/190
Snow (Pf)	20.0	Lumber DOL	1.15	BC	0.57	Vert(CT)	-0.15	8-11	>999	180		
TCDL	10.0	Rep Stress Incr	YES	WB	0.11	Horz(CT)	0.05	2	n/a	n/a		
BCLL	0.0*	Code	IRC2021/TPI2014	Matrix-MSH								
BCDL	10.0										Weight: 65 lb	FT = 20%

LUMBER

TOP CHORD 2x4 SP No.2
BOT CHORD 2x4 SP No.2
WEBS 2x4 SP No.3
SLIDER Left 2x6 SP No.2 -- 1-6-0, Right 2x6 SP No.2 -- 1-6-0

BRACING

TOP CHORD Structural wood sheathing directly applied or 2-2-0 oc purlins.
BOT CHORD Rigid ceiling directly applied or 10-0-0 oc bracing.

REACTIONS (size) 2=0-5-8, 6=0-5-8
Max Horiz 2=-128 (LC 12)
Max Uplift 2=-70 (LC 14), 6=-70 (LC 15)
Max Grav 2=711 (LC 21), 6=711 (LC 22)

FORCES (lb) - Maximum Compression/Maximum Tension
TOP CHORD 1-2=0/40, 2-4=-677/224, 4-6=-677/224, 6-7=0/40
BOT CHORD 2-8=-200/453, 6-8=-125/453
WEBS 4-8=0/301

NOTES

1) Unbalanced roof live loads have been considered for this design.
2) Wind: ASCE 7-16; Vult=130mph (3-second gust) Vasd=103mph; TCDL=6.0psf; BCDL=6.0psf; h=25ft; Cat. II; Exp B; Enclosed; MWFRS (envelope) exterior zone and C-C Exterior(2E) -1-2-8 to 1-9-8, Interior (1) 1-9-8 to 4-0-0, Exterior(2R) 4-0-0 to 10-0-0, Interior (1) 10-0-0 to 12-2-8, Exterior(2E) 12-2-8 to 15-2-8 zone; cantilever left and right exposed ; end vertical left and right exposed;C-C for members and forces & MWFRS for reactions shown; Lumber DOL=1.60 plate grip DOL=1.60
3) TCLL: ASCE 7-16; Pr=20.0 psf (roof LL: Lum DOL=1.15 Plate DOL=1.15); Pf=20.0 psf (Lum DOL=1.15 Plate DOL=1.15); Is=1.0; Rough Cat B; Fully Exp.; Ce=0.9; Cs=1.00; Ct=1.10
4) Unbalanced snow loads have been considered for this design.
5) This truss has been designed for greater of min roof live load of 12.0 psf or 1.00 times flat roof load of 20.0 psf on overhangs non-concurrent with other live loads.
6) This truss has been designed for a 10.0 psf bottom chord live load nonconcurrent with any other live loads.
7) * This truss has been designed for a live load of 20.0psf on the bottom chord in all areas where a rectangle 3-06-00 tall by 2-00-00 wide will fit between the bottom chord and any other members.
8) One H2.5A Simpson Strong-Tie connectors recommended to connect truss to bearing walls due to UPLIFT at jt(s) 2 and 6. This connection is for uplift only and does not consider lateral forces.

LOAD CASE(S) Standard

March 3,2025

WARNING - Verify design parameters and READ NOTES ON THIS AND INCLUDED MITEK REFERENCE PAGE MII-7473 rev. 1/2/2023 BEFORE USE.
Design valid for use only with MiTek® connectors. This design is based only upon parameters shown, and is for an individual building component, not a truss system. Before use, the building designer must verify the applicability of design parameters and properly incorporate this design into the overall building design. Bracing indicated is to prevent buckling of individual truss web and/or chord members only. Additional temporary and permanent bracing is always required for stability and to prevent collapse with possible personal injury and property damage. For general guidance regarding the fabrication, storage, delivery, erection and bracing of trusses and truss systems, see **ANSI/TPI1 Quality Criteria and DSB-22** available from Truss Plate Institute (www.tpinst.org) and **BCSI Building Component Safety Information** available from the Structural Building Component Association (www.sbcacomponents.com)

ENGINEERING BY TRENCO A MiTek Affiliate
818 Soundside Road
Edenton, NC 27932

Job	Truss	Truss Type	Qty	Ply	48 Serenity-Roof-671 Capstone B TMB GLH
25020165-01	D1GE	Common Supported Gable	1	1	I71710432 Job Reference (optional)

Carter Components (Sanford, NC), Sanford, NC - 27332,

Run: 8.73 S Feb 19 2025 Print: 8.730 S Feb 19 2025 MiTek Industries, Inc. Thu Feb 27 15:30:27 Page: 1
ID:MD5?ASqjzGEHD?PRbmf8vCzgvio-RfC?PsB70Hq3NSgPqnL8w3uITXbGKWrCDoi7J4zJC?f

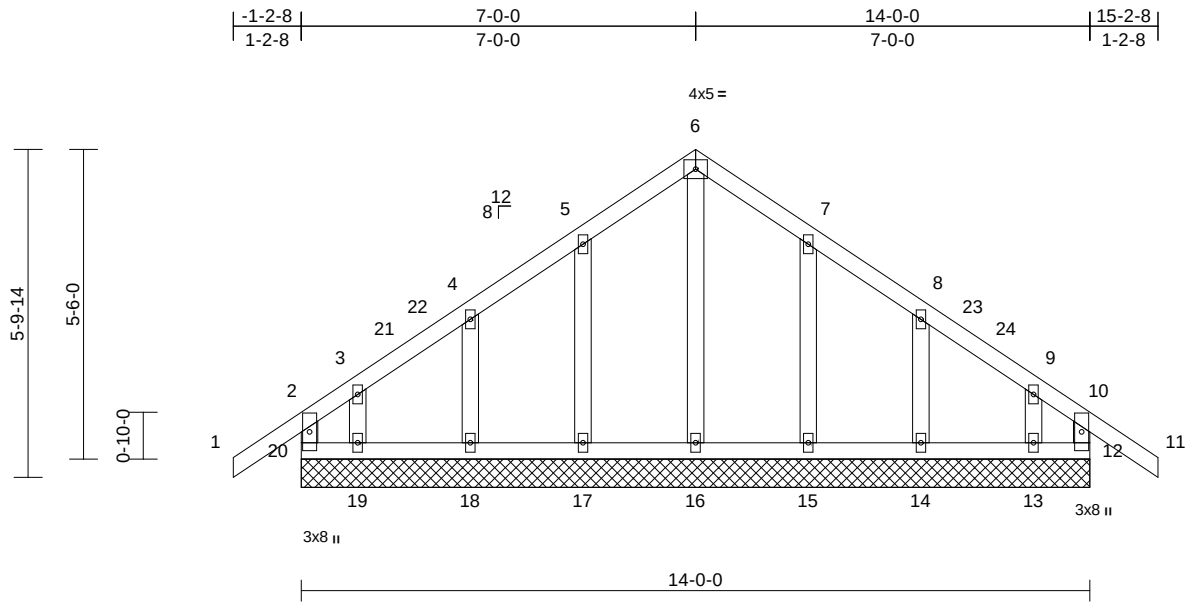

Scale = 1:40.9

Loading	(psf)	Spacing	1-11-4	CSI		DEFL	in	(loc)	l/defl	L/d	PLATES	GRIP
TCLL (roof)	20.0	Plate Grip DOL	1.15	TC	0.17	Vert(LL)	n/a	-	n/a	999	MT20	244/190
Snow (Pf)	20.0	Lumber DOL	1.15	BC	0.05	Vert(CT)	n/a	-	n/a	999		
TCDL	10.0	Rep Stress Incr	YES	WB	0.07	Horz(CT)	0.00	12	n/a	n/a		
BCLL	0.0*	Code	IRC2021/TPI2014	Matrix-MR								
BCDL	10.0										Weight: 80 lb	FT = 20%

LUMBER

TOP CHORD	2x4 SP No.2
BOT CHORD	2x4 SP No.2
WEBS	2x4 SP No.3
OTHERS	2x4 SP No.3

BRACING

TOP CHORD	Structural wood sheathing directly applied or 6-0-0 oc purlins, except end verticals.
BOT CHORD	Rigid ceiling directly applied or 6-0-0 oc bracing.

REACTIONS (size) 12=14-0-0, 13=14-0-0, 14=14-0-0, 15=14-0-0, 16=14-0-0, 17=14-0-0, 18=14-0-0, 19=14-0-0, 20=14-0-0
Max Horiz 20=145 (LC 13)
Max Uplift 12=-46 (LC 11), 13=-71 (LC 15), 14=-57 (LC 15), 15=-58 (LC 15), 17=-58 (LC 14), 18=-56 (LC 14), 19=-80 (LC 14), 20=-77 (LC 10)
Max Grav 12=149 (LC 22), 13=109 (LC 31), 14=224 (LC 22), 15=251 (LC 22), 16=171 (LC 28), 17=251 (LC 21), 18=224 (LC 21), 19=128 (LC 12), 20=162 (LC 26)

FORCES (lb) - Maximum Compression/Maximum Tension

TOP CHORD	2-20=-135/114, 1-2=0/44, 2-3=-95/90, 3-4=-65/85, 4-5=-52/112, 5-6=-80/181, 6-7=-80/181, 7-8=-45/112, 8-9=-37/64, 9-10=-64/57, 10-11=0/44, 10-12=-135/106
BOT CHORD	19-20=-66/127, 18-19=-66/127, 17-18=-66/127, 16-17=-66/127, 15-16=-66/127, 14-15=-66/127, 13-14=-66/127, 12-13=-66/127
WEBS	6-16=-132/7, 5-17=-213/102, 4-18=-183/114, 3-19=-98/72, 7-15=-213/102, 8-14=-183/114, 9-13=-92/67

NOTES

1) Unbalanced roof live loads have been considered for this design.
2) Wind: ASCE 7-16; Vult=130mph (3-second gust) Vasd=103mph; TCDL=6.0psf; BCDL=6.0psf; h=25ft; Cat. II; Exp B; Enclosed; MWFRS (envelope) exterior zone and C-C Corner(3E) -1-2-8 to 1-9-8, Exterior(2N) 1-9-8 to 4-0-0, Corner(3R) 4-0-0 to 10-0-0, Exterior(2N) 10-0-0 to 12-2-8, Corner(3E) 12-2-8 to 15-2-8 zone; cantilever left and right exposed ; end vertical left and right exposed;C-C for members and forces & MWFRS for reactions shown; Lumber DOL=1.60 plate grip DOL=1.60
3) Truss designed for wind loads in the plane of the truss only. For studs exposed to wind (normal to the face), see Standard Industry Gable End Details as applicable, or consult qualified building designer as per ANSI/TPI 1.
4) TCLL: ASCE 7-16; Pr=20.0 psf (roof LL: Lum DOL=1.15 Plate DOL=1.15); Pf=20.0 psf (Lum DOL=1.15 Plate DOL=1.15); Is=1.0; Rough Cat B; Fully Exp.; Ce=0.9; Cs=1.00; Ct=1.10
5) Unbalanced snow loads have been considered for this design.
6) This truss has been designed for greater of min roof live load of 12.0 psf or 1.00 times flat roof load of 20.0 psf on overhangs non-concurrent with other live loads.
7) All plates are 2x4 MT20 unless otherwise indicated.
8) Gable requires continuous bottom chord bearing.
9) Truss to be fully sheathed from one face or securely braced against lateral movement (i.e. diagonal web).
10) Gable studs spaced at 2-0-0 oc.
11) This truss has been designed for a 10.0 psf bottom chord live load nonconcurrent with any other live loads.
12) * This truss has been designed for a live load of 20.0psf on the bottom chord in all areas where a rectangle 3-06-00 tall by 2-00-00 wide will fit between the bottom chord and any other members.
13) Provide mechanical connection (by others) of truss to bearing plate capable of withstanding 77 lb uplift at joint 20, 46 lb uplift at joint 12, 58 lb uplift at joint 17, 56 lb uplift at joint 18, 80 lb uplift at joint 19, 58 lb uplift at joint 15, 57 lb uplift at joint 14 and 71 lb uplift at joint 13.

LOAD CASE(S) Standard

March 3,2025

WARNING - Verify design parameters and READ NOTES ON THIS AND INCLUDED MITEK REFERENCE PAGE MII-7473 rev. 1/2/2023 BEFORE USE.
Design valid for use only with MiTek® connectors. This design is based only upon parameters shown, and is for an individual building component, not a truss system. Before use, the building designer must verify the applicability of design parameters and properly incorporate this design into the overall building design. Bracing indicated is to prevent buckling of individual truss web and/or chord members only. Additional temporary and permanent bracing is always required for stability and to prevent collapse with possible personal injury and property damage. For general guidance regarding the fabrication, storage, delivery, erection and bracing of trusses and truss systems, see **ANSI/TPI1 Quality Criteria and DSB-22** available from Truss Plate Institute (www.tpinst.org) and **BCSI Building Component Safety Information** available from the Structural Building Component Association (www.sbcacomponents.com)

ENGINEERING BY TRENCO A MiTek Affiliate
818 Soundside Road
Edenton, NC 27932

Job	Truss	Truss Type	Qty	Ply	48 Serenity-Roof-671 Capstone B TMB GLH
25020165-01	D2	Common	3	1	I71710433 Job Reference (optional)

Carter Components (Sanford, NC), Sanford, NC - 27332, Run: 8.73 S Feb 19 2025 Print: 8.730 S Feb 19 2025 MiTek Industries, Inc. Thu Feb 27 15:30:27 Page: 1
ID:U_vLTjBXvU01qchCM3BB7XzgviK-RfC?PsB70Hq3NSgPqnL8w3uITXbGKWrCDoi7J4zJC?f

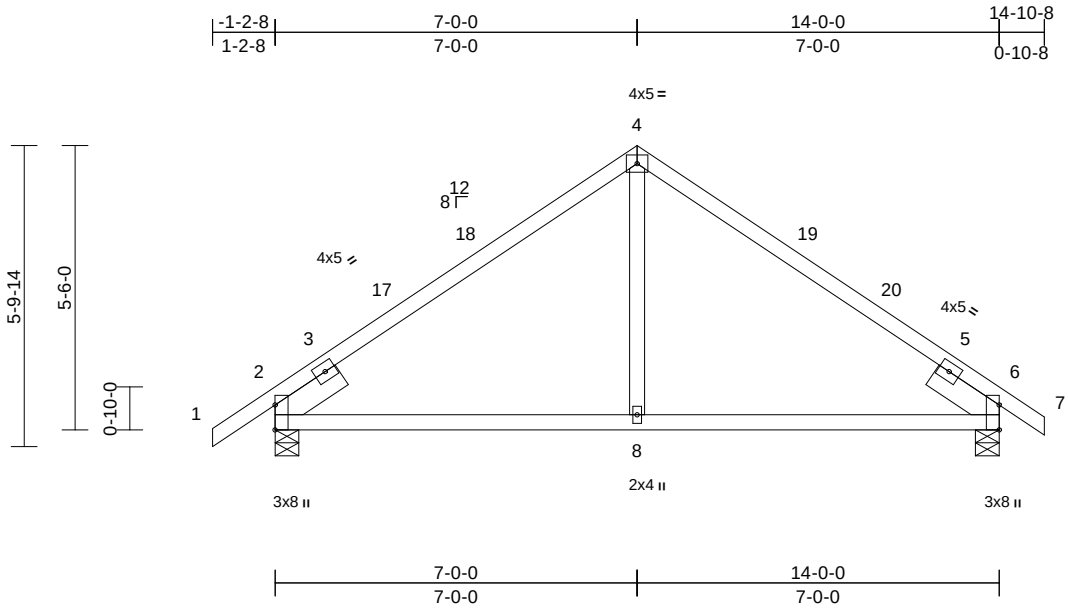

Scale = 1:44.6

Plate Offsets (X, Y): [2:Edge,0-0-0], [6:Edge,0-0-0]

Loading	(psf)	Spacing	2-0-0	CSI		DEFL	in	(loc)	l/defl	L/d	PLATES	GRIP
TCLL (roof)	20.0	Plate Grip DOL	1.15	TC	0.93	Vert(LL)	-0.11	8-15	>999	240	MT20	244/190
Snow (Pf)	20.0	Lumber DOL	1.15	BC	0.59	Vert(CT)	-0.15	8-15	>999	180		
TCDL	10.0	Rep Stress Incr	YES	WB	0.11	Horz(CT)	0.05	2	n/a	n/a		
BCLL	0.0*	Code	IRC2021/TPI2014	Matrix-MSH								
BCDL	10.0										Weight: 64 lb	FT = 20%

LUMBER
TOP CHORD 2x4 SP No.2
BOT CHORD 2x4 SP No.2
WEBS 2x4 SP No.3
SLIDER Left 2x6 SP No.2 -- 1-6-0, Right 2x6 SP No.2 -- 1-6-0

BRACING
TOP CHORD Structural wood sheathing directly applied or 2-1-15 oc purlins.
BOT CHORD Rigid ceiling directly applied or 10-0-0 oc bracing.

REACTIONS (size) 2=0-5-8, 6=0-5-8
Max Horiz 2=127 (LC 13)
Max Uplift 2=-70 (LC 14), 6=-63 (LC 15)
Max Grav 2=712 (LC 21), 6=689 (LC 22)

FORCES (lb) - Maximum Compression/Maximum Tension
TOP CHORD 1-2=0/40, 2-4=-679/224, 4-6=-680/192, 6-7=0/29
BOT CHORD 2-8=-203/453, 6-8=-138/471
WEBS 4-8=0/301

NOTES
1) Unbalanced roof live loads have been considered for this design.
2) Wind: ASCE 7-16; Vult=130mph (3-second gust) Vasd=103mph; TCDL=6.0psf; BCDL=6.0psf; h=25ft; Cat. II; Exp B; Enclosed; MWFRS (envelope) exterior zone and C-C Exterior(2E) -1-2-8 to 1-9-8, Interior (1) 1-9-8 to 4-0-0, Exterior(2R) 4-0-0 to 10-0-0, Interior (1) 10-0-0 to 11-10-8, Exterior(2E) 11-10-8 to 14-10-8 zone; cantilever left and right exposed ; end vertical left and right exposed;C-C for members and forces & MWFRS for reactions shown; Lumber DOL=1.60 plate grip DOL=1.60
3) TCLL: ASCE 7-16; Pr=20.0 psf (roof LL: Lum DOL=1.15 Plate DOL=1.15); Pf=20.0 psf (Lum DOL=1.15 Plate DOL=1.15); Is=1.0; Rough Cat B; Fully Exp.; Ce=0.9; Cs=1.00; Ct=1.10
4) Unbalanced snow loads have been considered for this design.
5) This truss has been designed for greater of min roof live load of 12.0 psf or 1.00 times flat roof load of 20.0 psf on overhangs non-concurrent with other live loads.
6) This truss has been designed for a 10.0 psf bottom chord live load nonconcurrent with any other live loads.
7) * This truss has been designed for a live load of 20.0psf on the bottom chord in all areas where a rectangle 3-06-00 tall by 2-00-00 wide will fit between the bottom chord and any other members.
8) One H2.5A Simpson Strong-Tie connectors recommended to connect truss to bearing walls due to UPLIFT at jt(s) 2 and 6. This connection is for uplift only and does not consider lateral forces.

LOAD CASE(S) Standard

March 3,2025

WARNING - Verify design parameters and READ NOTES ON THIS AND INCLUDED MITEK REFERENCE PAGE MII-7473 rev. 1/2/2023 BEFORE USE.
Design valid for use only with MiTek® connectors. This design is based only upon parameters shown, and is for an individual building component, not a truss system. Before use, the building designer must verify the applicability of design parameters and properly incorporate this design into the overall building design. Bracing indicated is to prevent buckling of individual truss web and/or chord members only. Additional temporary and permanent bracing is always required for stability and to prevent collapse with possible personal injury and property damage. For general guidance regarding the fabrication, storage, delivery, erection and bracing of trusses and truss systems, see **ANSI/TPI1 Quality Criteria and DSB-22** available from Truss Plate Institute (www.tpinst.org) and **BCSI Building Component Safety Information** available from the Structural Building Component Association (www.sbcacomponents.com)

ENGINEERING BY TRENCO A MiTek Affiliate
818 Soundside Road
Edenton, NC 27932

Job	Truss	Truss Type	Qty	Ply	48 Serenity-Roof-671 Capstone B TMB GLH
25020165-01	E1	Common	4	1	I71710434 Job Reference (optional)

Carter Components (Sanford, NC), Sanford, NC - 27332,

Run: 8.73 S Feb 19 2025 Print: 8.730 S Feb 19 2025 MiTek Industries, Inc. Thu Feb 27 15:30:27 Page: 1
ID:W5w1gTVfQzvgZL8LokhuaVzgvlp-RfC?PsB70Hq3NSgPqnL8w3uITXbGKWrCDoi7J4zJC?f

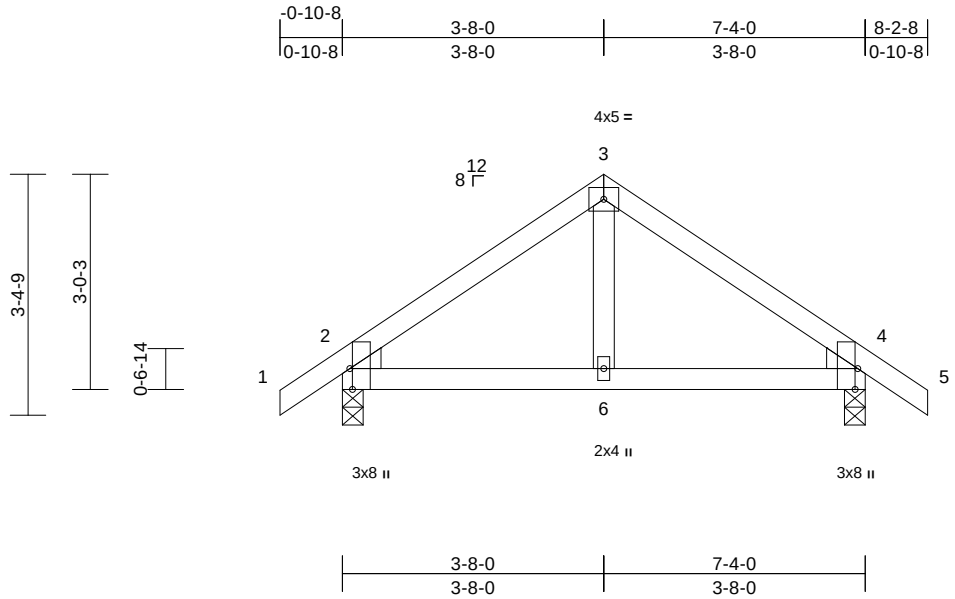

Scale = 1:32.3

Plate Offsets (X, Y): [2:0-3-8,Edge], [4:0-3-8,Edge]

Loading	(psf)	Spacing	1-11-4	CSI		DEFL	in	(loc)	l/defl	L/d	PLATES	GRIP
TCLL (roof)	20.0	Plate Grip DOL	1.15	TC	0.23	Vert(LL)	-0.01	6-9	>999	240	MT20	244/190
Snow (Pf)	20.0	Lumber DOL	1.15	BC	0.21	Vert(CT)	-0.02	6-9	>999	180		
TCDL	10.0	Rep Stress Incr	YES	WB	0.06	Horz(CT)	0.00	2	n/a	n/a		
BCLL	0.0*	Code	IRC2021/TPI2014	Matrix-MP								
BCDL	10.0										Weight: 33 lb	FT = 20%

LUMBER

TOP CHORD 2x4 SP No.2
BOT CHORD 2x4 SP No.2
WEBS 2x4 SP No.3
WEDGE Left: 2x4 SP No.3
Right: 2x4 SP No.3

BRACING

TOP CHORD Structural wood sheathing directly applied or 6-0-0 oc purlins.
BOT CHORD Rigid ceiling directly applied or 10-0-0 oc bracing.

REACTIONS (size) 2=0-3-8, 4=0-3-8
Max Horiz 2=69 (LC 13)
Max Uplift 2=-41 (LC 14), 4=-41 (LC 15)
Max Grav 2=452 (LC 21), 4=452 (LC 22)

FORCES (lb) - Maximum Compression/Maximum Tension
TOP CHORD 1-2=0/47, 2-3=-351/109, 3-4=-351/109, 4-5=0/47
BOT CHORD 2-6=-27/226, 4-6=-2/226
WEBS 3-6=-12/155

NOTES

1) Unbalanced roof live loads have been considered for this design.
2) Wind: ASCE 7-16; Vult=130mph (3-second gust) Vasd=103mph; TCDL=6.0psf; BCDL=6.0psf; h=25ft; Cat. II; Exp B; Enclosed; MWFRS (envelope) exterior zone and C-C Exterior(2E) -0-10-8 to 2-1-8, Exterior(2R) 2-1-8 to 5-2-8, Exterior(2E) 5-2-8 to 8-2-8 zone; cantilever left and right exposed ; end vertical left and right exposed;C-C for members and forces & MWFRS for reactions shown; Lumber DOL=1.60 plate grip DOL=1.60
3) TCLL: ASCE 7-16; Pr=20.0 psf (roof LL: Lum DOL=1.15 Plate DOL=1.15); Pf=20.0 psf (Lum DOL=1.15 Plate DOL=1.15); Is=1.0; Rough Cat B; Fully Exp.; Ce=0.9; Cs=1.00; Ct=1.10
4) Unbalanced snow loads have been considered for this design.
5) This truss has been designed for greater of min roof live load of 12.0 psf or 1.00 times flat roof load of 20.0 psf on overhangs non-concurrent with other live loads.
6) This truss has been designed for a 10.0 psf bottom chord live load nonconcurrent with any other live loads.
7) * This truss has been designed for a live load of 20.0psf on the bottom chord in all areas where a rectangle 3-06-00 tall by 2-00-00 wide will fit between the bottom chord and any other members.
8) One H2.5A Simpson Strong-Tie connectors recommended to connect truss to bearing walls due to UPLIFT at jt(s) 2 and 4. This connection is for uplift only and does not consider lateral forces.

LOAD CASE(S) Standard

March 3,2025

WARNING - Verify design parameters and READ NOTES ON THIS AND INCLUDED MITEK REFERENCE PAGE MII-7473 rev. 1/2/2023 BEFORE USE.
Design valid for use only with MiTek® connectors. This design is based only upon parameters shown, and is for an individual building component, not a truss system. Before use, the building designer must verify the applicability of design parameters and properly incorporate this design into the overall building design. Bracing indicated is to prevent buckling of individual truss web and/or chord members only. Additional temporary and permanent bracing is always required for stability and to prevent collapse with possible personal injury and property damage. For general guidance regarding the fabrication, storage, delivery, erection and bracing of trusses and truss systems, see **ANSI/TPI1 Quality Criteria and DSB-22** available from Truss Plate Institute (www.tpinst.org) and **BCSI Building Component Safety Information** available from the Structural Building Component Association (www.sbcacomponents.com)

ENGINEERING BY TRENCO A MiTek Affiliate
818 Soundside Road
Edenton, NC 27932

Job	Truss	Truss Type	Qty	Ply	48 Serenity-Roof-671 Capstone B TMB GLH
25020165-01	E2	Hip Girder	1	1	I71710435 Job Reference (optional)

Carter Components (Sanford, NC), Sanford, NC - 27332,

Run: 8.73 S Feb 19 2025 Print: 8.730 S Feb 19 2025 MiTek Industries, Inc. Thu Feb 27 15:30:27 Page: 1
ID:sWg4aY8TF2GnbuQnb8g5vOzgvmG-RfC?PsB70Hq3NSgPqnL8w3uITXbGKWrCDoi7J4zJC?f

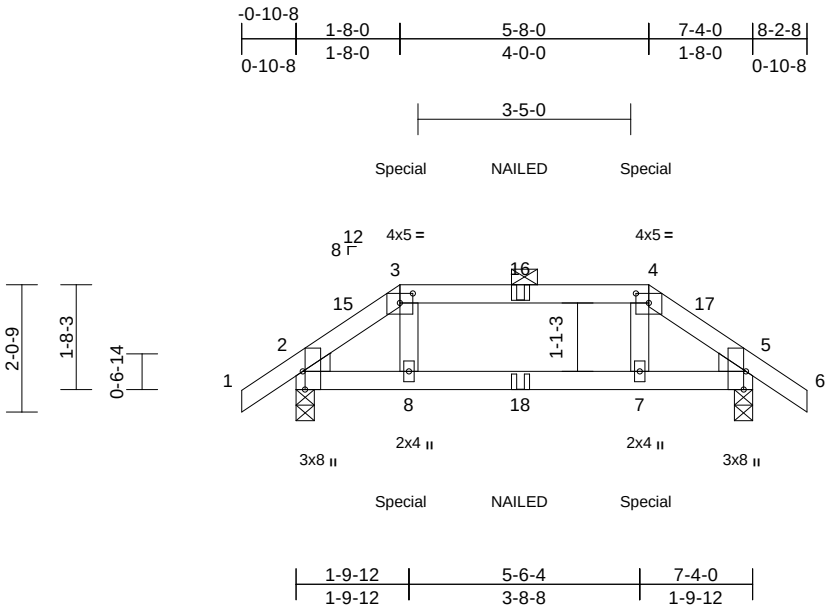

Scale = 1:37

Plate Offsets (X, Y): [2:0-3-8,Edge], [3:0-2-8,0-1-13], [4:0-2-8,0-1-13], [5:0-3-8,Edge]

Loading	(psf)	Spacing	2-0-0	CSI		DEFL	in	(loc)	l/defl	L/d	PLATES	GRIP
TCLL (roof)	20.0	Plate Grip DOL	1.15	TC	0.56	Vert(LL)	-0.01	7-8	>999	240	MT20	244/190
Snow (Pf)	20.0	Lumber DOL	1.15	BC	0.16	Vert(CT)	-0.01	7-8	>999	180		
TCDL	10.0	Rep Stress Incr	NO	WB	0.04	Horz(CT)	0.00	5	n/a	n/a		
BCLL	0.0*	Code	IRC2021/TPI2014	Matrix-MP								
BCDL	10.0										Weight: 31 lb	FT = 20%

LUMBER

TOP CHORD 2x4 SP No.2
BOT CHORD 2x4 SP No.2
WEBS 2x4 SP No.3
WEDGE Left: 2x4 SP No.3
Right: 2x4 SP No.3

BRACING

TOP CHORD Structural wood sheathing directly applied or 6-0-0 oc purlins, except 2-0-0 oc purlins (6-0-0 max.): 3-4.
BOT CHORD Rigid ceiling directly applied or 10-0-0 oc bracing.

REACTIONS (size) 2=0-3-8, 5=0-3-8
Max Horiz 2=-40 (LC 10)
Max Uplift 2=-68 (LC 12), 5=-69 (LC 13)
Max Grav 2=410 (LC 19), 5=410 (LC 20)

FORCES (lb) - Maximum Compression/Maximum Tension
TOP CHORD 1-2=0/45, 2-3=-435/71, 3-4=-344/57, 4-5=-435/70, 5-6=0/45
BOT CHORD 2-8=-49/338, 7-8=-46/344, 5-7=-49/338
WEBS 3-8=0/115, 4-7=0/115

NOTES

1) Unbalanced roof live loads have been considered for this design.
2) Wind: ASCE 7-16; Vult=130mph (3-second gust) Vasd=103mph; TCDL=6.0psf; BCDL=6.0psf; h=25ft; Cat. II; Exp B; Enclosed; MWFRS (envelope) exterior zone; cantilever left and right exposed ; end vertical left and right exposed; Lumber DOL=1.60 plate grip DOL=1.60
3) TCLL: ASCE 7-16; Pr=20.0 psf (roof LL: Lum DOL=1.15 Plate DOL=1.15); Pf=20.0 psf (Lum DOL=1.15 Plate DOL=1.15); Is=1.0; Rough Cat B; Fully Exp.; Ce=0.9; Cs=1.00; Ct=1.10
4) Unbalanced snow loads have been considered for this design.
5) This truss has been designed for greater of min roof live load of 12.0 psf or 1.00 times flat roof load of 20.0 psf on overhangs non-concurrent with other live loads.
6) Provide adequate drainage to prevent water ponding.
7) This truss has been designed for a 10.0 psf bottom chord live load nonconcurrent with any other live loads.
8) * This truss has been designed for a live load of 20.0psf on the bottom chord in all areas where a rectangle 3-06-00 tall by 2-00-00 wide will fit between the bottom chord and any other members.
9) One H2.5A Simpson Strong-Tie connectors recommended to connect truss to bearing walls due to UPLIFT at jt(s) 2 and 5. This connection is for uplift only and does not consider lateral forces.
10) Graphical purlin representation does not depict the size or the orientation of the purlin along the top and/or bottom chord.
11) "NAILED" indicates 3-10d (0.148"x3") or 3-12d (0.148"x3.25") toe-nails per NDS guidlines.
12) Hanger(s) or other connection device(s) shall be provided sufficient to support concentrated load(s) 66 lb down and 60 lb up at 1-8-0, and 66 lb down and 60 lb up at 5-8-0 on top chord, and 16 lb down and 13 lb up at 1-8-0, and 16 lb down and 13 lb up at 5-7-4 on bottom chord. The design/selection of such connection device(s) is the responsibility of others.
13) In the LOAD CASE(S) section, loads applied to the face of the truss are noted as front (F) or back (B).

LOAD CASE(S) Standard

1) Dead + Snow (balanced): Lumber Increase=1.15, Plate Increase=1.15
Uniform Loads (lb/ft)
Vert: 1-3=-60, 3-4=-60, 4-6=-60, 9-12=-20
Concentrated Loads (lb)
Vert: 8=-11 (B), 7=-11 (B), 18=-6 (B)

March 3,2025

WARNING - Verify design parameters and READ NOTES ON THIS AND INCLUDED MITEK REFERENCE PAGE MII-7473 rev. 1/2/2023 BEFORE USE.
Design valid for use only with MiTek® connectors. This design is based only upon parameters shown, and is for an individual building component, not a truss system. Before use, the building designer must verify the applicability of design parameters and properly incorporate this design into the overall building design. Bracing indicated is to prevent buckling of individual truss web and/or chord members only. Additional temporary and permanent bracing is always required for stability and to prevent collapse with possible personal injury and property damage. For general guidance regarding the fabrication, storage, delivery, erection and bracing of trusses and truss systems, see **ANSI/TPI1 Quality Criteria and DSB-22** available from Truss Plate Institute (www.tpinst.org) and **BCSI Building Component Safety Information** available from the Structural Building Component Association (www.sbcacomponents.com)

ENGINEERING BY TRENCO A MiTek Affiliate
818 Soundside Road
Edenton, NC 27932

Job	Truss	Truss Type	Qty	Ply	48 Serenity-Roof-671 Capstone B TMB GLH
25020165-01	F1	Half Hip Girder	1	1	I71710436 Job Reference (optional)

Carter Components (Sanford, NC), Sanford, NC - 27332,

Run: 8.73 S Feb 19 2025 Print: 8.730 S Feb 19 2025 MiTek Industries, Inc. Thu Feb 27 15:30:27 Page: 1
ID:WHLlz1tfRIUvyVlYIWHw0lzgvmc-RfC?PsB70Hq3NSgPqnL8w3uITXbGKWrCDoi7J4zJC?f

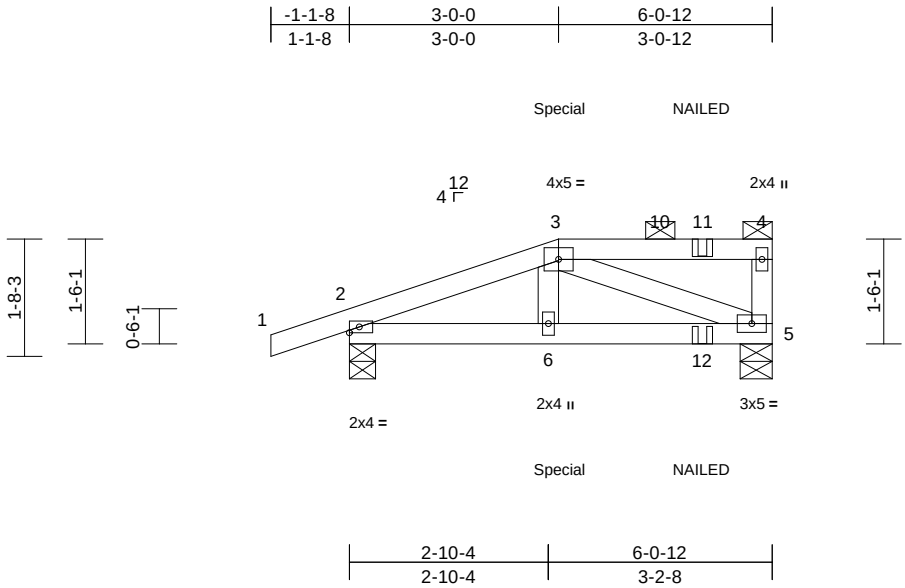

Scale = 1:33

Loading	(psf)	Spacing	2-0-0	CSI		DEFL	in	(loc)	l/defl	L/d	PLATES	GRIP
TCLL (roof)	20.0	Plate Grip DOL	1.15	TC	0.25	Vert(LL)	0.01	5-6	>999	240	MT20	244/190
Snow (Pf)	20.0	Lumber DOL	1.15	BC	0.18	Vert(CT)	-0.01	5-6	>999	180		
TCDL	10.0	Rep Stress Incr	NO	WB	0.11	Horz(CT)	0.00	5	n/a	n/a		
BCLL	0.0*	Code	IRC2021/TPI2014	Matrix-MP								
BCDL	10.0										Weight: 27 lb	FT = 20%

LUMBER
TOP CHORD 2x4 SP No.2
BOT CHORD 2x4 SP No.2
WEBS 2x4 SP No.3

BRACING
TOP CHORD Structural wood sheathing directly applied or 6-0-0 oc purlins, except end verticals, and 2-0-0 oc purlins: 3-4.
BOT CHORD Rigid ceiling directly applied or 10-0-0 oc bracing.

REACTIONS (size) 2=0-4-8, 5=0-5-8
Max Horiz 2=53 (LC 11)
Max Uplift 2=-146 (LC 8), 5=-115 (LC 9)
Max Grav 2=420 (LC 34), 5=319 (LC 33)

FORCES (lb) - Maximum Compression/Maximum Tension
TOP CHORD 1-2=0/30, 2-3=-454/148, 3-4=-15/12, 4-5=-125/41
BOT CHORD 2-6=-157/389, 5-6=-154/379
WEBS 3-6=-28/134, 3-5=-411/157

NOTES
1) Unbalanced roof live loads have been considered for this design.
2) Wind: ASCE 7-16; Vult=130mph (3-second gust) Vasd=103mph; TCDL=6.0psf; BCDL=6.0psf; h=25ft; Cat. II; Exp B; Enclosed; MWFRS (envelope) exterior zone; cantilever left and right exposed ; end vertical left and right exposed; porch left and right exposed; Lumber DOL=1.60 plate grip DOL=1.60
3) TCLL: ASCE 7-16; Pr=20.0 psf (roof LL: Lum DOL=1.15 Plate DOL=1.15); Pf=20.0 psf (Lum DOL=1.15 Plate DOL=1.15); Is=1.0; Rough Cat B; Fully Exp.; Ce=0.9; Cs=1.00; Ct=1.10
4) Unbalanced snow loads have been considered for this design.
5) This truss has been designed for greater of min roof live load of 12.0 psf or 1.00 times flat roof load of 20.0 psf on overhangs non-concurrent with other live loads.
6) Provide adequate drainage to prevent water ponding.
7) This truss has been designed for a 10.0 psf bottom chord live load nonconcurrent with any other live loads.
8) * This truss has been designed for a live load of 20.0psf on the bottom chord in all areas where a rectangle 3-06-00 tall by 2-00-00 wide will fit between the bottom chord and any other members.
9) One H2.5A Simpson Strong-Tie connectors recommended to connect truss to bearing walls due to UPLIFT at jt(s) 2 and 5. This connection is for uplift only and does not consider lateral forces.
10) Graphical purlin representation does not depict the size or the orientation of the purlin along the top and/or bottom chord.
11) "NAILED" indicates 3-10d (0.148"x3") or 3-12d (0.148"x3.25") toe-nails per NDS guidlines.
12) Hanger(s) or other connection device(s) shall be provided sufficient to support concentrated load(s) 102 lb down and 87 lb up at 3-0-0 on top chord, and 54 lb down and 53 lb up at 3-0-0 on bottom chord. The design/selection of such connection device(s) is the responsibility of others.
13) In the LOAD CASE(S) section, loads applied to the face of the truss are noted as front (F) or back (B).

LOAD CASE(S) Standard
1) Dead + Snow (balanced): Lumber Increase=1.15, Plate Increase=1.15
Uniform Loads (lb/ft)
Vert: 1-3=-60, 3-4=-60, 5-7=-20
Concentrated Loads (lb)
Vert: 6=-16 (F), 3=-55 (F), 11=-25 (F), 12=-17 (F)

March 3,2025

WARNING - Verify design parameters and READ NOTES ON THIS AND INCLUDED MITEK REFERENCE PAGE MII-7473 rev. 1/2/2023 BEFORE USE.
Design valid for use only with MiTek® connectors. This design is based only upon parameters shown, and is for an individual building component, not a truss system. Before use, the building designer must verify the applicability of design parameters and properly incorporate this design into the overall building design. Bracing indicated is to prevent buckling of individual truss web and/or chord members only. Additional temporary and permanent bracing is always required for stability and to prevent collapse with possible personal injury and property damage. For general guidance regarding the fabrication, storage, delivery, erection and bracing of trusses and truss systems, see **ANSI/TPI1 Quality Criteria and DSB-22** available from Truss Plate Institute (www.tpinst.org) and **BCSI Building Component Safety Information** available from the Structural Building Component Association (www.sbcacomponents.com)

ENGINEERING BY TRENCO A MiTek Affiliate
818 Soundside Road
Edenton, NC 27932

Job	Truss	Truss Type	Qty	Ply	48 Serenity-Roof-671 Capstone B TMB GLH
25020165-01	F2	Half Hip	1	1	I71710437 Job Reference (optional)

Carter Components (Sanford, NC), Sanford, NC - 27332,

Run: 8.73 S Feb 19 2025 Print: 8.730 S Feb 19 2025 MiTek Industries, Inc. Thu Feb 27 15:30:28 Page: 1
ID:o4DYIoYjo?4kDMBMDLIbQ2zgvn1-RfC?PsB70Hq3NSgPqnL8w3uITXbGKWrCDoi7J4zJC?f

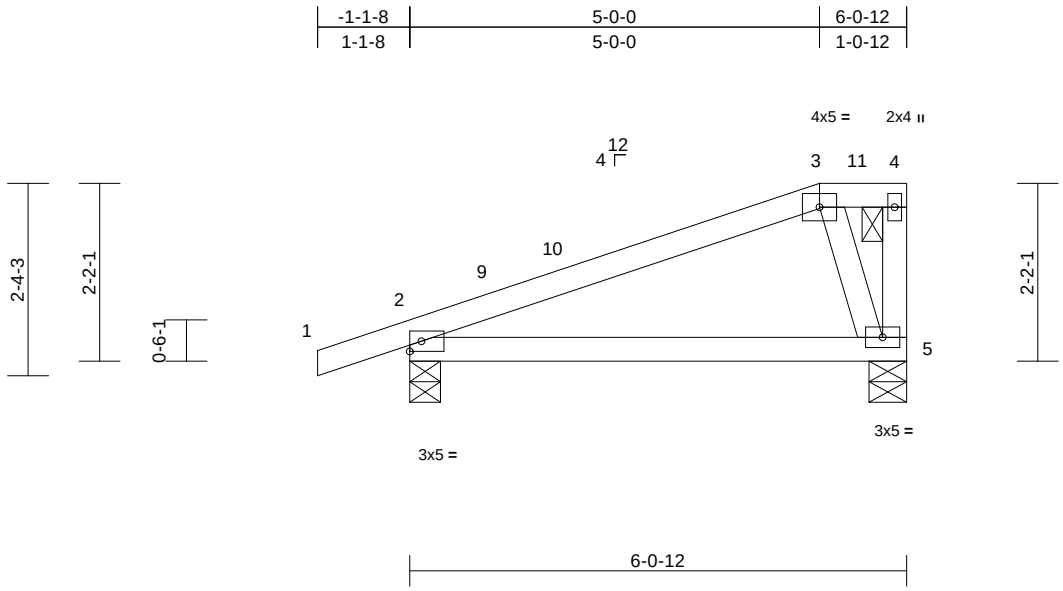

Scale = 1:28.1

Loading	(psf)	Spacing	2-0-0	CSI		DEFL	in	(loc)	l/defl	L/d	PLATES	GRIP
TCLL (roof)	20.0	Plate Grip DOL	1.15	TC	0.53	Vert(LL)	0.09	5-8	>812	240	MT20	244/190
Snow (Pf)	20.0	Lumber DOL	1.15	BC	0.35	Vert(CT)	-0.11	5-8	>666	180		
TCDL	10.0	Rep Stress Incr	YES	WB	0.05	Horz(CT)	0.01	2	n/a	n/a		
BCLL	0.0*	Code	IRC2021/TPI2014	Matrix-MP								
BCDL	10.0										Weight: 25 lb	FT = 20%

LUMBER
TOP CHORD 2x4 SP No.2
BOT CHORD 2x4 SP No.2
WEBS 2x4 SP No.3

BRACING
TOP CHORD Structural wood sheathing directly applied or 6-0-0 oc purlins, except end verticals, and 2-0-0 oc purlins: 3-4.
BOT CHORD Rigid ceiling directly applied or 10-0-0 oc bracing.

REACTIONS (size) 2=0-4-8, 5=0-5-8
Max Horiz 2=80 (LC 13)
Max Uplift 2=-130 (LC 10), 5=-90 (LC 10)
Max Grav 2=404 (LC 38), 5=253 (LC 38)

FORCES (lb) - Maximum Compression/Maximum Tension
TOP CHORD 1-2=0/30, 2-3=-154/102, 3-4=-24/35, 4-5=-39/31
BOT CHORD 2-5=-69/135
WEBS 3-5=-208/168

NOTES
1) Unbalanced roof live loads have been considered for this design.
2) Wind: ASCE 7-16; Vult=130mph (3-second gust) Vasd=103mph; TCDL=6.0psf; BCDL=6.0psf; h=25ft; Cat. II; Exp B; Enclosed; MWFRS (envelope) exterior zone and C-C Exterior(2E) -1-1-8 to 1-10-8, Exterior(2R) 1-10-8 to 5-0-0, Exterior(2E) 5-0-0 to 5-11-0 zone; cantilever left and right exposed ; end vertical left and right exposed; porch left and right exposed;C-C for members and forces & MWFRS for reactions shown; Lumber DOL=1.60 plate grip DOL=1.60
3) TCLL: ASCE 7-16; Pr=20.0 psf (roof LL: Lum DOL=1.15 Plate DOL=1.15); Pf=20.0 psf (Lum DOL=1.15 Plate DOL=1.15); Is=1.0; Rough Cat B; Fully Exp.; Ce=0.9; Cs=1.00; Ct=1.10
4) Unbalanced snow loads have been considered for this design.
5) This truss has been designed for greater of min roof live load of 12.0 psf or 1.00 times flat roof load of 20.0 psf on overhangs non-concurrent with other live loads.
6) Provide adequate drainage to prevent water ponding.
7) This truss has been designed for a 10.0 psf bottom chord live load nonconcurrent with any other live loads.
8) * This truss has been designed for a live load of 20.0psf on the bottom chord in all areas where a rectangle 3-06-00 tall by 2-00-00 wide will fit between the bottom chord and any other members.
9) One H2.5A Simpson Strong-Tie connectors recommended to connect truss to bearing walls due to UPLIFT at jt(s) 5 and 2. This connection is for uplift only and does not consider lateral forces.
10) Graphical purlin representation does not depict the size or the orientation of the purlin along the top and/or bottom chord.

LOAD CASE(S) Standard

March 3,2025

WARNING - Verify design parameters and READ NOTES ON THIS AND INCLUDED MITEK REFERENCE PAGE MII-7473 rev. 1/2/2023 BEFORE USE.
Design valid for use only with MiTek® connectors. This design is based only upon parameters shown, and is for an individual building component, not a truss system. Before use, the building designer must verify the applicability of design parameters and properly incorporate this design into the overall building design. Bracing indicated is to prevent buckling of individual truss web and/or chord members only. Additional temporary and permanent bracing is always required for stability and to prevent collapse with possible personal injury and property damage. For general guidance regarding the fabrication, storage, delivery, erection and bracing of trusses and truss systems, see **ANSI/TPI1 Quality Criteria and DSB-22** available from Truss Plate Institute (www.tpinst.org) and **BCSI Building Component Safety Information** available from the Structural Building Component Association (www.sbcacomponents.com)

ENGINEERING BY TRENCO A MiTek Affiliate
818 Soundside Road
Edenton, NC 27932

Job	Truss	Truss Type	Qty	Ply	48 Serenity-Roof-671 Capstone B TMB GLH
25020165-01	F3	Monopitch	4	1	I71710438 Job Reference (optional)

Carter Components (Sanford, NC), Sanford, NC - 27332,

Run: 8.73 S Feb 19 2025 Print: 8.730 S Feb 19 2025 MiTek Industries, Inc. Thu Feb 27 15:30:28 Page: 1
ID:59cmCNQS8wq90qQReF6F0xzgvnB-RfC?PsB70Hq3NSgPqnL8w3uITXbGKWrCDoi7J4zJC?f

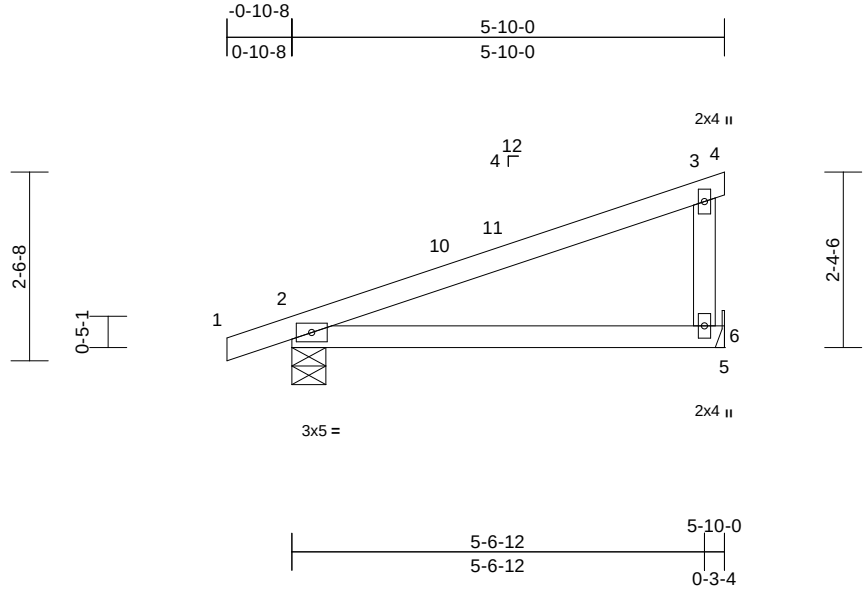

Scale = 1:31.1

Loading	(psf)	Spacing	2-0-0	CSI		DEFL	in	(loc)	l/defl	L/d	PLATES	GRIP
TCLL (roof)	20.0	Plate Grip DOL	1.15	TC	0.66	Vert(LL)	-0.07	6-9	>953	240	MT20	244/190
Snow (Pf)	20.0	Lumber DOL	1.15	BC	0.48	Vert(CT)	-0.13	6-9	>531	180		
TCDL	10.0	Rep Stress Incr	YES	WB	0.00	Horz(CT)	0.01	2	n/a	n/a		
BCLL	0.0*	Code	IRC2021/TPI2014	Matrix-MP								
BCDL	10.0										Weight: 22 lb	FT = 20%

LUMBER
TOP CHORD 2x4 SP No.2
BOT CHORD 2x4 SP No.2
WEBS 2x4 SP No.3

BRACING
TOP CHORD Structural wood sheathing directly applied or 5-10-0 oc purlins, except end verticals.
BOT CHORD Rigid ceiling directly applied or 10-0-0 oc bracing.

REACTIONS (size) 2=0-5-8, 6= Mechanical
Max Horiz 2=85 (LC 13)
Max Uplift 2=-63 (LC 10), 6=-44 (LC 14)
Max Grav 2=386 (LC 21), 6=327 (LC 21)

FORCES (lb) - Maximum Compression/Maximum Tension
TOP CHORD 1-2=0/25, 2-3=-78/68, 3-4=-8/0, 3-6=-238/152
BOT CHORD 2-6=-48/117, 5-6=0/0

NOTES
1) Wind: ASCE 7-16; Vult=130mph (3-second gust) Vasd=103mph; TCDL=6.0psf; BCDL=6.0psf; h=25ft; Cat. II; Exp B; Enclosed; MWFRS (envelope) exterior zone and C-C Exterior(2E) -0-10-8 to 2-1-8, Interior (1) 2-1-8 to 2-10-0, Exterior(2E) 2-10-0 to 5-10-0 zone; cantilever left and right exposed ; end vertical left and right exposed;C-C for members and forces & MWFRS for reactions shown; Lumber DOL=1.60 plate grip DOL=1.60
2) TCLL: ASCE 7-16; Pr=20.0 psf (roof LL: Lum DOL=1.15 Plate DOL=1.15); Pf=20.0 psf (Lum DOL=1.15 Plate DOL=1.15); Is=1.0; Rough Cat B; Fully Exp.; Ce=0.9; Cs=1.00; Ct=1.10
3) Unbalanced snow loads have been considered for this design.
4) This truss has been designed for greater of min roof live load of 12.0 psf or 1.00 times flat roof load of 20.0 psf on overhangs non-concurrent with other live loads.
5) This truss has been designed for a 10.0 psf bottom chord live load nonconcurrent with any other live loads.
6) * This truss has been designed for a live load of 20.0psf on the bottom chord in all areas where a rectangle 3-06-00 tall by 2-00-00 wide will fit between the bottom chord and any other members.
7) Refer to girder(s) for truss to truss connections.
8) Provide mechanical connection (by others) of truss to bearing plate capable of withstanding 44 lb uplift at joint 6.
9) One H2.5A Simpson Strong-Tie connectors recommended to connect truss to bearing walls due to UPLIFT at jt(s) 2. This connection is for uplift only and does not consider lateral forces.

LOAD CASE(S) Standard

March 3,2025

WARNING - Verify design parameters and READ NOTES ON THIS AND INCLUDED MITEK REFERENCE PAGE MII-7473 rev. 1/2/2023 BEFORE USE.
Design valid for use only with MiTek® connectors. This design is based only upon parameters shown, and is for an individual building component, not a truss system. Before use, the building designer must verify the applicability of design parameters and properly incorporate this design into the overall building design. Bracing indicated is to prevent buckling of individual truss web and/or chord members only. Additional temporary and permanent bracing is always required for stability and to prevent collapse with possible personal injury and property damage. For general guidance regarding the fabrication, storage, delivery, erection and bracing of trusses and truss systems, see **ANSI/TPI1 Quality Criteria and DSB-22** available from Truss Plate Institute (www.tpinst.org) and **BCSI Building Component Safety Information** available from the Structural Building Component Association (www.sbcacomponents.com)

ENGINEERING BY TRENCO A MiTek Affiliate
818 Soundside Road
Edenton, NC 27932

Job	Truss	Truss Type	Qty	Ply	48 Serenity-Roof-671 Capstone B TMB GLH
25020165-01	F4	Jack-Closed	6	1	I71710439 Job Reference (optional)

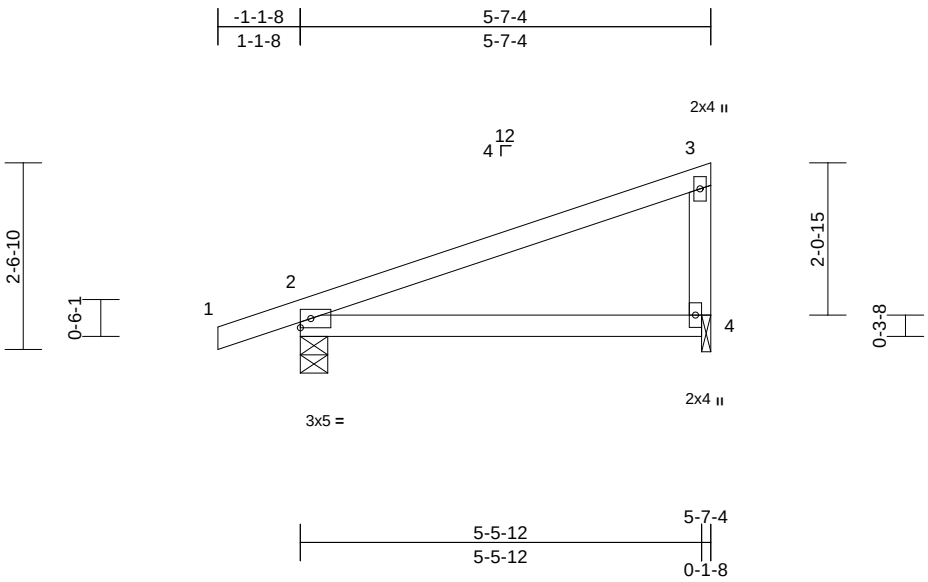

Scale = 1:31.5

Loading	(psf)	Spacing	2-0-0	CSI		DEFL	in	(loc)	l/defl	L/d	PLATES	GRIP
TCLL (roof)	20.0	Plate Grip DOL	1.15	TC	0.65	Vert(LL)	0.09	4-7	>736	240	MT20	244/190
Snow (Pf)	20.0	Lumber DOL	1.15	BC	0.40	Vert(CT)	-0.11	4-7	>618	180		
TCDL	10.0	Rep Stress Incr	YES	WB	0.00	Horz(CT)	0.02	2	n/a	n/a		
BCLL	0.0*	Code	IRC2021/TPI2014	Matrix-MP								
BCDL	10.0										Weight: 21 lb	FT = 20%

LUMBER
TOP CHORD 2x4 SP No.2
BOT CHORD 2x4 SP No.2
WEBS 2x4 SP No.3

BRACING
TOP CHORD Structural wood sheathing directly applied or 5-7-4 oc purlins, except end verticals.
BOT CHORD Rigid ceiling directly applied or 10-0-0 oc bracing.

REACTIONS (size) 2=0-4-8, 4=0-1-8
Max Horiz 2=85 (LC 13)
Max Uplift 2=-122 (LC 10), 4=-84 (LC 10)
Max Grav 2=408 (LC 21), 4=287 (LC 21)

FORCES (lb) - Maximum Compression/Maximum Tension
TOP CHORD 1-2=0/32, 2-3=-162/163, 3-4=-210/171
BOT CHORD 2-4=-96/138

NOTES
1) Wind: ASCE 7-16; Vult=130mph (3-second gust) Vasd=103mph; TCDL=6.0psf; BCDL=6.0psf; h=25ft; Cat. II; Exp B; Enclosed; MWFRS (envelope) exterior zone and C-C Exterior(2E) zone; cantilever left and right exposed ; end vertical left and right exposed; porch left and right exposed;C-C for members and forces & MWFRS for reactions shown; Lumber DOL=1.60 plate grip DOL=1.60
2) TCLL: ASCE 7-16; Pr=20.0 psf (roof LL: Lum DOL=1.15 Plate DOL=1.15); Pf=20.0 psf (Lum DOL=1.15 Plate DOL=1.15); Is=1.0; Rough Cat B; Fully Exp.; Ce=0.9; Cs=1.00; Ct=1.10
3) Unbalanced snow loads have been considered for this design.
4) This truss has been designed for greater of min roof live load of 12.0 psf or 1.00 times flat roof load of 20.0 psf on overhangs non-concurrent with other live loads.
5) This truss has been designed for a 10.0 psf bottom chord live load nonconcurrent with any other live loads.
6) * This truss has been designed for a live load of 20.0psf on the bottom chord in all areas where a rectangle 3-06-00 tall by 2-00-00 wide will fit between the bottom chord and any other members.
7) Bearings are assumed to be: , Joint 4 SP No.3 .
8) Bearing at joint(s) 4 considers parallel to grain value using ANSI/TPI 1 angle to grain formula. Building designer should verify capacity of bearing surface.
9) Provide mechanical connection (by others) of truss to bearing plate at joint(s) 4.
10) One H2.5A Simpson Strong-Tie connectors recommended to connect truss to bearing walls due to UPLIFT at jt(s) 2 and 4. This connection is for uplift only and does not consider lateral forces.

LOAD CASE(S) Standard

March 3,2025

WARNING - Verify design parameters and READ NOTES ON THIS AND INCLUDED MITEK REFERENCE PAGE MII-7473 rev. 1/2/2023 BEFORE USE.
Design valid for use only with MiTek® connectors. This design is based only upon parameters shown, and is for an individual building component, not a truss system. Before use, the building designer must verify the applicability of design parameters and properly incorporate this design into the overall building design. Bracing indicated is to prevent buckling of individual truss web and/or chord members only. Additional temporary and permanent bracing is always required for stability and to prevent collapse with possible personal injury and property damage. For general guidance regarding the fabrication, storage, delivery, erection and bracing of trusses and truss systems, see **ANSI/TPI1 Quality Criteria and DSB-22** available from Truss Plate Institute (www.tpinst.org) and **BCSI Building Component Safety Information** available from the Structural Building Component Association (www.sbcacomponents.com)

ENGINEERING BY TRENCO A MiTek Affiliate
818 Soundside Road
Edenton, NC 27932

Job	Truss	Truss Type	Qty	Ply	48 Serenity-Roof-671 Capstone B TMB GLH
25020165-01	F5	Monopitch Supported Gable	1	1	I71710440 Job Reference (optional)

Carter Components (Sanford, NC), Sanford, NC - 27332,

Run: 8.73 S Feb 19 2025 Print: 8.730 S Feb 19 2025 MiTek Industries, Inc. Thu Feb 27 15:30:28 Page: 1
ID:nNxHdfV5qmgspEBhGeEkXCzgvph-RfC?PsB70Hq3NSgPqnL8w3uITXbGKWrCDoi7J4zJC?f

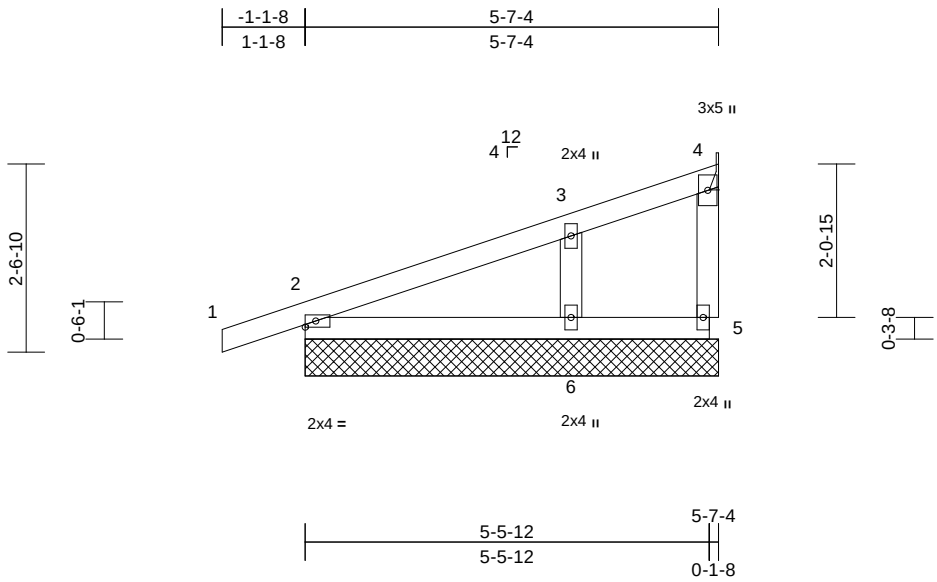

Scale = 1:31.2

Loading	(psf)	Spacing	2-0-0	CSI		DEFL	in	(loc)	l/defl	L/d	PLATES	GRIP
TCLL (roof)	20.0	Plate Grip DOL	1.15	TC	0.18	Vert(LL)	0.01	6-9	>999	240	MT20	244/190
Snow (Pf)	20.0	Lumber DOL	1.15	BC	0.09	Vert(CT)	-0.01	6-9	>999	180		
TCDL	10.0	Rep Stress Incr	YES	WB	0.08	Horz(CT)	0.00	4	n/a	n/a		
BCLL	0.0*	Code	IRC2021/TPI2014	Matrix-MP								
BCDL	10.0										Weight: 23 lb	FT = 20%

LUMBER

TOP CHORD	2x4 SP No.2
BOT CHORD	2x4 SP No.2
WEBS	2x4 SP No.3
OTHERS	2x4 SP No.3

BRACING

TOP CHORD	Structural wood sheathing directly applied or 5-7-4 oc purlins, except end verticals.
BOT CHORD	Rigid ceiling directly applied or 10-0-0 oc bracing.

REACTIONS (size) 2=5-7-4, 4= Mechanical, 5=5-7-4, 6=5-7-4
Max Horiz 2=85 (LC 13)
Max Uplift 2=-55 (LC 10), 4=-13 (LC 11), 6=-61 (LC 14)
Max Grav 2=281 (LC 21), 4=39 (LC 21), 5=14 (LC 7), 6=374 (LC 21)

FORCES (lb) - Maximum Compression/Maximum Tension

TOP CHORD	1-2=0/32, 2-3=-179/111, 3-4=-45/42, 4-5=0/0
BOT CHORD	2-6=-47/94, 5-6=-26/47
WEBS	3-6=-285/278

NOTES

1) Wind: ASCE 7-16; Vult=130mph (3-second gust) Vasd=103mph; TCDL=6.0psf; BCDL=6.0psf; h=25ft; Cat. II; Exp B; Enclosed; MWFRS (envelope) exterior zone and C-C Corner(3E) -1-1-8 to 1-10-8, Exterior(2N) 1-10-8 to 2-5-8, Corner(3E) 2-5-8 to 5-5-8 zone; cantilever left and right exposed ; end vertical left and right exposed;C-C for members and forces & MWFRS for reactions shown; Lumber DOL=1.60 plate grip DOL=1.60
2) Truss designed for wind loads in the plane of the truss only. For studs exposed to wind (normal to the face), see Standard Industry Gable End Details as applicable, or consult qualified building designer as per ANSI/TPI 1.
3) TCLL: ASCE 7-16; Pr=20.0 psf (roof LL: Lum DOL=1.15 Plate DOL=1.15); Pf=20.0 psf (Lum DOL=1.15 Plate DOL=1.15); Is=1.0; Rough Cat B; Fully Exp.; Ce=0.9; Cs=1.00; Ct=1.10
4) Unbalanced snow loads have been considered for this design.
5) This truss has been designed for greater of min roof live load of 12.0 psf or 1.00 times flat roof load of 20.0 psf on overhangs non-concurrent with other live loads.
6) Gable studs spaced at 2-0-0 oc.
7) This truss has been designed for a 10.0 psf bottom chord live load nonconcurrent with any other live loads.
8) * This truss has been designed for a live load of 20.0psf on the bottom chord in all areas where a rectangle 3-06-00 tall by 2-00-00 wide will fit between the bottom chord and any other members.
9) Refer to girder(s) for truss to truss connections.
10) Provide mechanical connection (by others) of truss to bearing plate capable of withstanding 13 lb uplift at joint 4.
11) One H2.5A Simpson Strong-Tie connectors recommended to connect truss to bearing walls due to UPLIFT at jt(s) 2 and 6. This connection is for uplift only and does not consider lateral forces.
12) Gap between inside of top chord bearing and first diagonal or vertical web shall not exceed 0.500in.

LOAD CASE(S) Standard

March 3,2025

WARNING - Verify design parameters and READ NOTES ON THIS AND INCLUDED MITEK REFERENCE PAGE MII-7473 rev. 1/2/2023 BEFORE USE.
Design valid for use only with MiTek® connectors. This design is based only upon parameters shown, and is for an individual building component, not a truss system. Before use, the building designer must verify the applicability of design parameters and properly incorporate this design into the overall building design. Bracing indicated is to prevent buckling of individual truss web and/or chord members only. Additional temporary and permanent bracing is always required for stability and to prevent collapse with possible personal injury and property damage. For general guidance regarding the fabrication, storage, delivery, erection and bracing of trusses and truss systems, see **ANSI/TPI1 Quality Criteria and DSB-22** available from Truss Plate Institute (www.tpinst.org) and **BCSI Building Component Safety Information** available from the Structural Building Component Association (www.sbcacomponents.com)

ENGINEERING BY TRENCO A MiTek Affiliate
818 Soundside Road
Edenton, NC 27932

Job	Truss	Truss Type	Qty	Ply	48 Serenity-Roof-671 Capstone B TMB GLH
25020165-01	F6	Jack-Open	1	1	I71710441 Job Reference (optional)

Carter Components (Sanford, NC), Sanford, NC - 27332,

Run: 8.73 S Feb 19 2025 Print: 8.730 S Feb 19 2025 MiTek Industries, Inc. Thu Feb 27 15:30:28 Page: 1
ID:XNNSAmAnynOYiEChkBndTjzgvq5-RfC?PsB70Hq3NSgPqnL8w3uITXbGKWrCDoi7J4zJC?f

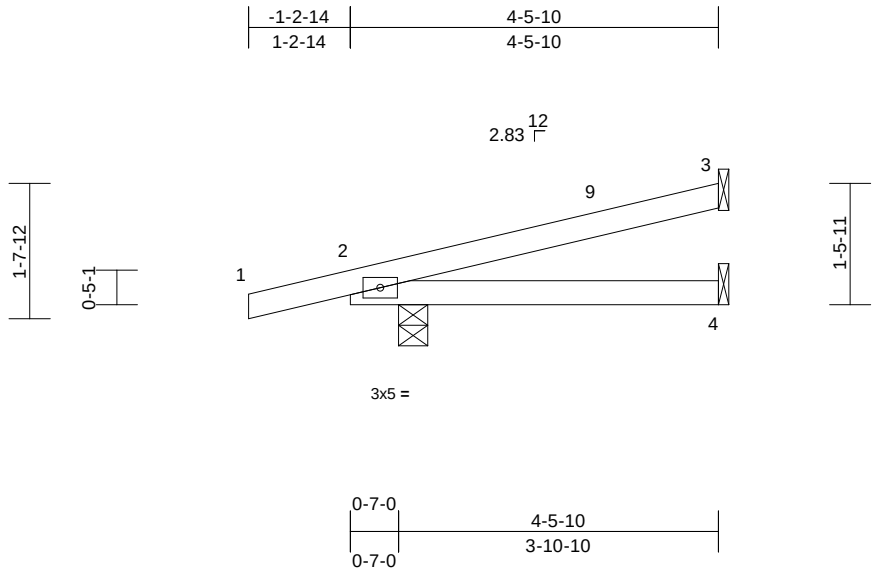

Scale = 1:28

Loading	(psf)	Spacing	2-0-0	CSI		DEFL	in	(loc)	l/defl	L/d	PLATES	GRIP
TCLL (roof)	20.0	Plate Grip DOL	1.15	TC	0.33	Vert(LL)	-0.01	5	>999	240	MT20	244/190
Snow (Pf)	20.0	Lumber DOL	1.15	BC	0.13	Vert(CT)	-0.01	4-8	>999	180		
TCDL	10.0	Rep Stress Incr	YES	WB	0.00	Horz(CT)	0.00	3	n/a	n/a		
BCLL	0.0*	Code	IRC2021/TPI2014	Matrix-MP								
BCDL	10.0										Weight: 15 lb	FT = 20%

LUMBER
TOP CHORD 2x4 SP No.2
BOT CHORD 2x4 SP No.2

BRACING
TOP CHORD Structural wood sheathing directly applied or 4-5-10 oc purlins.
BOT CHORD Rigid ceiling directly applied or 10-0-0 oc bracing.

REACTIONS (size) 2=0-4-4, 3= Mechanical, 4= Mechanical
Max Horiz 2=52 (LC 10)
Max Uplift 2=-137 (LC 10), 3=-38 (LC 14), 4=-10 (LC 11)
Max Grav 2=422 (LC 21), 3=119 (LC 21), 4=62 (LC 7)

FORCES (lb) - Maximum Compression/Maximum Tension
TOP CHORD 1-2=0/24, 2-3=-245/226
BOT CHORD 2-4=-166/213

NOTES
1) Wind: ASCE 7-16; Vult=130mph (3-second gust) Vasd=103mph; TCDL=6.0psf; BCDL=6.0psf; h=25ft; Cat. II; Exp B; Enclosed; MWFRS (envelope) exterior zone and C-C Corner (3) -1-2-14 to 3-0-1, Exterior(2R) 3-0-1 to 4-4-14 zone; cantilever left and right exposed ; end vertical left and right exposed; porch left and right exposed;C-C for members and forces & MWFRS for reactions shown; Lumber DOL=1.60 plate grip DOL=1.60
2) TCLL: ASCE 7-16; Pr=20.0 psf (roof LL: Lum DOL=1.15 Plate DOL=1.15); Pf=20.0 psf (Lum DOL=1.15 Plate DOL=1.15); Is=1.0; Rough Cat B; Fully Exp.; Ce=0.9; Cs=1.00; Ct=1.10
3) Unbalanced snow loads have been considered for this design.
4) This truss has been designed for greater of min roof live load of 12.0 psf or 1.00 times flat roof load of 20.0 psf on overhangs non-concurrent with other live loads.
5) This truss has been designed for a 10.0 psf bottom chord live load nonconcurrent with any other live loads.
6) * This truss has been designed for a live load of 20.0psf on the bottom chord in all areas where a rectangle 3-06-00 tall by 2-00-00 wide will fit between the bottom chord and any other members.
7) Bearings are assumed to be: , Joint 2 User Defined .
8) Refer to girder(s) for truss to truss connections.
9) Provide mechanical connection (by others) of truss to bearing plate capable of withstanding 38 lb uplift at joint 3, 137 lb uplift at joint 2 and 10 lb uplift at joint 4.

LOAD CASE(S) Standard

NORTH CAROLINA PROFESSIONAL SEAL 036322 ENGINEER ERIC A. GILBERT

March 3,2025

WARNING - Verify design parameters and READ NOTES ON THIS AND INCLUDED MITEK REFERENCE PAGE MII-7473 rev. 1/2/2023 BEFORE USE.
Design valid for use only with MiTek® connectors. This design is based only upon parameters shown, and is for an individual building component, not a truss system. Before use, the building designer must verify the applicability of design parameters and properly incorporate this design into the overall building design. Bracing indicated is to prevent buckling of individual truss web and/or chord members only. Additional temporary and permanent bracing is always required for stability and to prevent collapse with possible personal injury and property damage. For general guidance regarding the fabrication, storage, delivery, erection and bracing of trusses and truss systems, see **ANSI/TPI1 Quality Criteria and DSB-22** available from Truss Plate Institute (www.tpinst.org) and **BCSI Building Component Safety Information** available from the Structural Building Component Association (www.sbcacomponents.com)

ENGINEERING BY TRENCO A MiTek Affiliate
818 Soundside Road
Edenton, NC 27932

Job	Truss	Truss Type	Qty	Ply	48 Serenity-Roof-671 Capstone B TMB GLH
25020165-01	F7	Jack-Open	2	1	I71710442 Job Reference (optional)

Carter Components (Sanford, NC), Sanford, NC - 27332,

Run: 8.73 S Feb 19 2025 Print: 8.730 S Feb 19 2025 MiTek Industries, Inc. Thu Feb 27 15:30:28 Page: 1
ID:mZM?wDt5r5E5COnunRqmzSzgvqU-RfC?PsB70Hq3NSgPqnL8w3uITXbGKWrCDoi7J4zJC?f

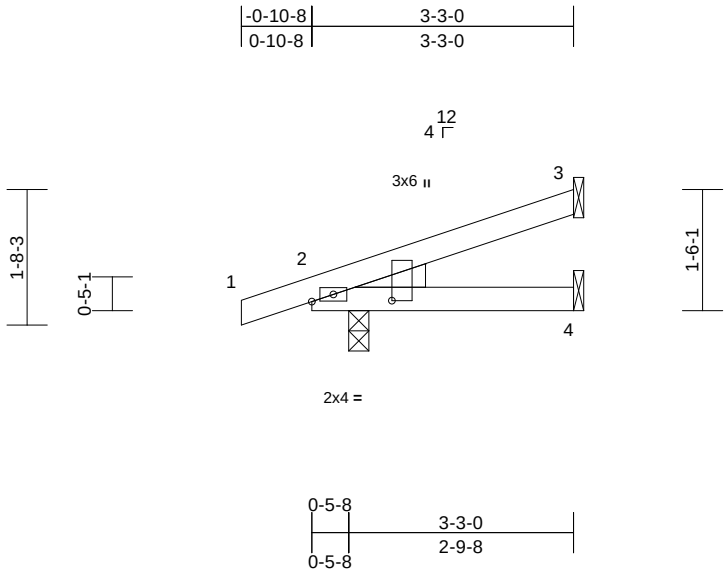

Scale = 1:28.6

Plate Offsets (X, Y): [2:0-1-3,0-0-1], [2:0-0-2,0-11-15]

Loading	(psf)	Spacing	2-0-0	CSI		DEFL	in	(loc)	l/defl	L/d	PLATES	GRIP
TCLL (roof)	20.0	Plate Grip DOL	1.15	TC	0.08	Vert(LL)	0.00	4-9	>999	240	MT20	244/190
Snow (Pf)	20.0	Lumber DOL	1.15	BC	0.07	Vert(CT)	0.00	4-9	>999	180		
TCDL	10.0	Rep Stress Incr	YES	WB	0.00	Horz(CT)	0.00	3	n/a	n/a		
BCLL	0.0*	Code	IRC2021/TPI2014	Matrix-MP								
BCDL	10.0										Weight: 13 lb	FT = 20%

LUMBER
TOP CHORD 2x4 SP No.2
BOT CHORD 2x4 SP No.2
WEDGE Left: 2x4 SP No.3

BRACING
TOP CHORD Structural wood sheathing directly applied or 3-3-0 oc purlins.
BOT CHORD Rigid ceiling directly applied or 10-0-0 oc bracing.

REACTIONS (size) 2=0-3-0, 3= Mechanical, 4= Mechanical
Max Horiz 2=53 (LC 10)
Max Uplift 2=-90 (LC 10), 3=-27 (LC 10), 4=-11 (LC 10)
Max Grav 2=298 (LC 21), 3=81 (LC 21), 4=44 (LC 7)

FORCES (lb) - Maximum Compression/Maximum Tension
TOP CHORD 1-2=0/24, 2-3=-139/163
BOT CHORD 2-4=-149/164

NOTES
1) Wind: ASCE 7-16; Vult=130mph (3-second gust) Vasd=103mph; TCDL=6.0psf; BCDL=6.0psf; h=25ft; Cat. II; Exp B; Enclosed; MWFRS (envelope) exterior zone and C-C Exterior(2E) zone; cantilever left and right exposed ; end vertical left and right exposed; porch left and right exposed;C-C for members and forces & MWFRS for reactions shown; Lumber DOL=1.60 plate grip DOL=1.60
2) TCLL: ASCE 7-16; Pr=20.0 psf (roof LL: Lum DOL=1.15 Plate DOL=1.15); Pf=20.0 psf (Lum DOL=1.15 Plate DOL=1.15); Is=1.0; Rough Cat B; Fully Exp.; Ce=0.9; Cs=1.00; Ct=1.10
3) Unbalanced snow loads have been considered for this design.
4) This truss has been designed for greater of min roof live load of 12.0 psf or 1.00 times flat roof load of 20.0 psf on overhangs non-concurrent with other live loads.
5) This truss has been designed for a 10.0 psf bottom chord live load nonconcurrent with any other live loads.
6) * This truss has been designed for a live load of 20.0psf on the bottom chord in all areas where a rectangle 3-06-00 tall by 2-00-00 wide will fit between the bottom chord and any other members.
7) Bearings are assumed to be: , Joint 2 User Defined .
8) Refer to girder(s) for truss to truss connections.
9) Provide mechanical connection (by others) of truss to bearing plate capable of withstanding 27 lb uplift at joint 3 and 11 lb uplift at joint 4.
10) One H2.5A Simpson Strong-Tie connectors recommended to connect truss to bearing walls due to UPLIFT at jt(s) 2. This connection is for uplift only and does not consider lateral forces.

LOAD CASE(S) Standard

March 3,2025

WARNING - Verify design parameters and READ NOTES ON THIS AND INCLUDED MITEK REFERENCE PAGE MII-7473 rev. 1/2/2023 BEFORE USE.
Design valid for use only with MiTek® connectors. This design is based only upon parameters shown, and is for an individual building component, not a truss system. Before use, the building designer must verify the applicability of design parameters and properly incorporate this design into the overall building design. Bracing indicated is to prevent buckling of individual truss web and/or chord members only. Additional temporary and permanent bracing is always required for stability and to prevent collapse with possible personal injury and property damage. For general guidance regarding the fabrication, storage, delivery, erection and bracing of trusses and truss systems, see **ANSI/TPI1 Quality Criteria and DSB-22** available from Truss Plate Institute (www.tpinst.org) and **BCSI Building Component Safety Information** available from the Structural Building Component Association (www.sbcacomponents.com)

ENGINEERING BY TRENCO A MiTek Affiliate
818 Soundside Road
Edenton, NC 27932

Job	Truss	Truss Type	Qty	Ply	48 Serenity-Roof-671 Capstone B TMB GLH
25020165-01	G1	Jack-Open	9	1	I71710443 Job Reference (optional)

Carter Components (Sanford, NC), Sanford, NC - 27332,

Run: 8.73 S Feb 19 2025 Print: 8.730 S Feb 19 2025 MiTek Industries, Inc. Thu Feb 27 15:30:28 Page: 1
ID:uXb3W2dwneb3AAhr2Xyrc0zgvqp-RfC?PsB70Hq3NSgPqnL8w3uITXbGKWrCDoi7J4zJC?f

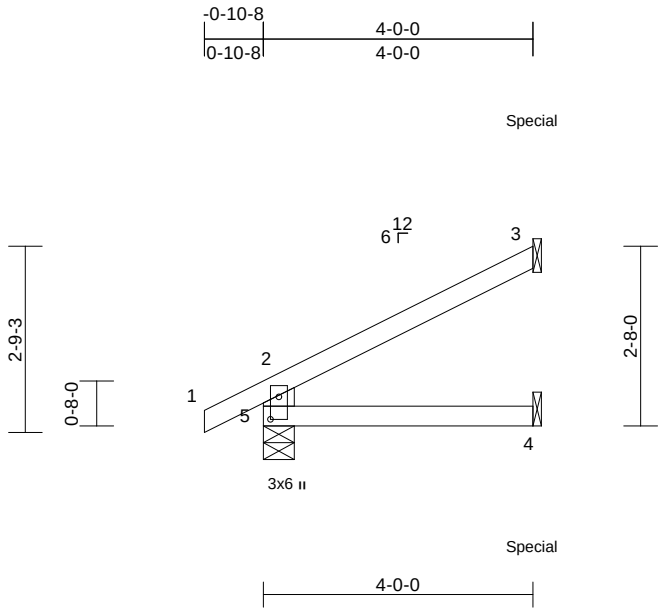

Scale = 1:34.2

Plate Offsets (X, Y): [5:0-4-0,0-1-8]

Loading	(psf)	Spacing	1-11-4	CSI		DEFL	in	(loc)	l/defl	L/d	PLATES	GRIP
TCLL (roof)	20.0	Plate Grip DOL	1.15	TC	0.29	Vert(LL)	0.01	4-5	>999	240	MT20	244/190
Snow (Pf)	20.0	Lumber DOL	1.15	BC	0.14	Vert(CT)	-0.02	4-5	>999	180		
TCDL	10.0	Rep Stress Incr	YES	WB	0.00	Horz(CT)	0.01	3	n/a	n/a		
BCLL	0.0*	Code	IRC2021/TPI2014	Matrix-MR								
BCDL	10.0										Weight: 15 lb	FT = 20%

LUMBER
TOP CHORD 2x4 SP No.2
BOT CHORD 2x4 SP No.2
WEBS 2x6 SP No.2

BRACING
TOP CHORD Structural wood sheathing directly applied or 4-0-0 oc purlins, except end verticals.
BOT CHORD Rigid ceiling directly applied or 10-0-0 oc bracing.

REACTIONS (size) 3= Mechanical, 4= Mechanical, 5=0-5-8
Max Horiz 5=77 (LC 14)
Max Uplift 3=-88 (LC 14), 5=-21 (LC 14)
Max Grav 3=227 (LC 21), 4=110 (LC 7), 5=324 (LC 21)

FORCES (lb) - Maximum Compression/Maximum Tension
TOP CHORD 2-5=-298/145, 1-2=0/45, 2-3=-88/50
BOT CHORD 4-5=0/0

NOTES
1) Wind: ASCE 7-16; Vult=130mph (3-second gust) Vasd=103mph; TCDL=6.0psf; BCDL=6.0psf; h=25ft; Cat. II; Exp B; Enclosed; MWFRS (envelope) exterior zone and C-C Exterior(2E) zone; cantilever left and right exposed ; end vertical left and right exposed;C-C for members and forces & MWFRS for reactions shown; Lumber DOL=1.60 plate grip DOL=1.60
2) TCLL: ASCE 7-16; Pr=20.0 psf (roof LL: Lum DOL=1.15 Plate DOL=1.15); Pf=20.0 psf (Lum DOL=1.15 Plate DOL=1.15); Is=1.0; Rough Cat B; Fully Exp.; Ce=0.9; Cs=1.00; Ct=1.10
3) Unbalanced snow loads have been considered for this design.
4) This truss has been designed for greater of min roof live load of 12.0 psf or 1.00 times flat roof load of 20.0 psf on overhangs non-concurrent with other live loads.
5) This truss has been designed for a 10.0 psf bottom chord live load nonconcurrent with any other live loads.
6) * This truss has been designed for a live load of 20.0psf on the bottom chord in all areas where a rectangle 3-06-00 tall by 2-00-00 wide will fit between the bottom chord and any other members.
7) Bearings are assumed to be: , Joint 5 User Defined .
8) Refer to girder(s) for truss to truss connections.
9) Provide mechanical connection (by others) of truss to bearing plate capable of withstanding 88 lb uplift at joint 3.
10) One H2.5A Simpson Strong-Tie connectors recommended to connect truss to bearing walls due to UPLIFT at jt(s) 5. This connection is for uplift only and does not consider lateral forces.
11) Hanger(s) or other connection device(s) shall be provided sufficient to support concentrated load(s) 130 lb down and 64 lb up at 3-11-4 on top chord, and 44 lb down at 3-11-4 on bottom chord. The design/selection of such connection device(s) is the responsibility of others.
12) In the LOAD CASE(S) section, loads applied to the face of the truss are noted as front (F) or back (B).

LOAD CASE(S) Standard
1) Dead + Snow (balanced): Lumber Increase=1.15, Plate Increase=1.15
Uniform Loads (lb/ft)
Vert: 1-2=-58, 2-3=-58, 4-5=-19
Concentrated Loads (lb)
Vert: 3=-108 (B), 4=-29 (B)

March 3,2025

WARNING - Verify design parameters and READ NOTES ON THIS AND INCLUDED MITEK REFERENCE PAGE MII-7473 rev. 1/2/2023 BEFORE USE.
Design valid for use only with MiTek® connectors. This design is based only upon parameters shown, and is for an individual building component, not a truss system. Before use, the building designer must verify the applicability of design parameters and properly incorporate this design into the overall building design. Bracing indicated is to prevent buckling of individual truss web and/or chord members only. Additional temporary and permanent bracing is always required for stability and to prevent collapse with possible personal injury and property damage. For general guidance regarding the fabrication, storage, delivery, erection and bracing of trusses and truss systems, see **ANSI/TPI1 Quality Criteria and DSB-22** available from Truss Plate Institute (www.tpinst.org) and **BCSI Building Component Safety Information** available from the Structural Building Component Association (www.sbcacomponents.com)

ENGINEERING BY TRENCO A MiTek Affiliate
818 Soundside Road
Edenton, NC 27932

Job	Truss	Truss Type	Qty	Ply	48 Serenity-Roof-671 Capstone B TMB GLH
25020165-01	G2	Jack-Open	1	1	I71710444 Job Reference (optional)

Carter Components (Sanford, NC), Sanford, NC - 27332,

Run: 8.73 S Feb 19 2025 Print: 8.730 S Feb 19 2025 MiTek Industries, Inc. Thu Feb 27 15:30:28 Page: 1
ID:P3VFkuPe06Kd0PJO_lddtDzgvr5-RfC?PsB70Hq3NSgPqnL8w3uITXbGKWrCDoi7J4zJC?f

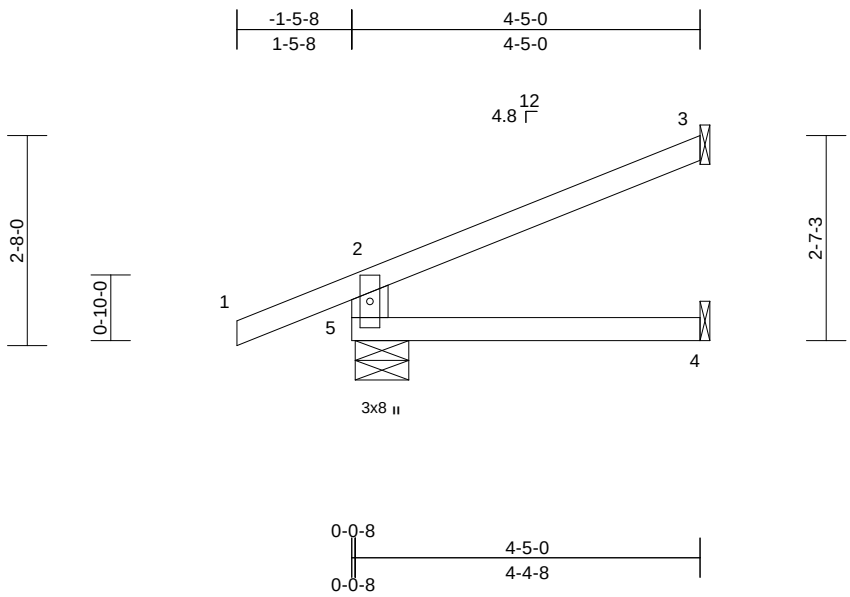

Scale = 1:29.2

Loading	(psf)	Spacing	2-0-0	CSI		DEFL	in	(loc)	l/defl	L/d	PLATES	GRIP
TCLL (roof)	20.0	Plate Grip DOL	1.15	TC	0.33	Vert(LL)	-0.01	4-5	>999	240	MT20	244/190
Snow (Pf)	20.0	Lumber DOL	1.15	BC	0.17	Vert(CT)	-0.03	4-5	>999	180		
TCDL	10.0	Rep Stress Incr	YES	WB	0.00	Horz(CT)	0.01	3	n/a	n/a		
BCLL	0.0*	Code	IRC2021/TPI2014	Matrix-MR								
BCDL	10.0										Weight: 17 lb	FT = 20%

LUMBER
TOP CHORD 2x4 SP No.2
BOT CHORD 2x4 SP No.2
WEBS 2x6 SP No.2

BRACING
TOP CHORD Structural wood sheathing directly applied or 4-5-0 oc purlins, except end verticals.
BOT CHORD Rigid ceiling directly applied or 10-0-0 oc bracing.

REACTIONS (size) 3= Mechanical, 4= Mechanical, 5=0-8-3
Max Horiz 5=74 (LC 14)
Max Uplift 3=-54 (LC 14), 5=-54 (LC 10)
Max Grav 3=155 (LC 21), 4=75 (LC 7), 5=417 (LC 21)

FORCES (lb) - Maximum Compression/Maximum Tension
TOP CHORD 2-5=-379/243, 1-2=0/58, 2-3=-83/43
BOT CHORD 4-5=0/0

NOTES
1) Wind: ASCE 7-16; Vult=130mph (3-second gust) Vasd=103mph; TCDL=6.0psf; BCDL=6.0psf; h=25ft; Cat. II; Exp B; Enclosed; MWFRS (envelope) exterior zone and C-C Corner (3) -1-5-8 to 2-9-7, Exterior(2R) 2-9-7 to 4-4-4 zone; cantilever left and right exposed ; end vertical left and right exposed;C-C for members and forces & MWFRS for reactions shown; Lumber DOL=1.60 plate grip DOL=1.60
2) TCLL: ASCE 7-16; Pr=20.0 psf (roof LL: Lum DOL=1.15 Plate DOL=1.15); Pf=20.0 psf (Lum DOL=1.15 Plate DOL=1.15); Is=1.0; Rough Cat B; Fully Exp.; Ce=0.9; Cs=1.00; Ct=1.10
3) Unbalanced snow loads have been considered for this design.
4) This truss has been designed for greater of min roof live load of 12.0 psf or 1.00 times flat roof load of 20.0 psf on overhangs non-concurrent with other live loads.
5) This truss has been designed for a 10.0 psf bottom chord live load nonconcurrent with any other live loads.
6) * This truss has been designed for a live load of 20.0psf on the bottom chord in all areas where a rectangle 3-06-00 tall by 2-00-00 wide will fit between the bottom chord and any other members.
7) Refer to girder(s) for truss to truss connections.
8) Provide mechanical connection (by others) of truss to bearing plate capable of withstanding 54 lb uplift at joint 3.
9) One H2.5A Simpson Strong-Tie connectors recommended to connect truss to bearing walls due to UPLIFT at jt(s) 5. This connection is for uplift only and does not consider lateral forces.

LOAD CASE(S) Standard

March 3,2025

WARNING - Verify design parameters and READ NOTES ON THIS AND INCLUDED MITEK REFERENCE PAGE MII-7473 rev. 1/2/2023 BEFORE USE.
Design valid for use only with MiTek® connectors. This design is based only upon parameters shown, and is for an individual building component, not a truss system. Before use, the building designer must verify the applicability of design parameters and properly incorporate this design into the overall building design. Bracing indicated is to prevent buckling of individual truss web and/or chord members only. Additional temporary and permanent bracing is always required for stability and to prevent collapse with possible personal injury and property damage. For general guidance regarding the fabrication, storage, delivery, erection and bracing of trusses and truss systems, see **ANSI/TPI1 Quality Criteria and DSB-22** available from Truss Plate Institute (www.tpinst.org) and **BCSI Building Component Safety Information** available from the Structural Building Component Association (www.sbcacomponents.com)

ENGINEERING BY TRENCO A MiTek Affiliate
818 Soundside Road
Edenton, NC 27932

Job	Truss	Truss Type	Qty	Ply	48 Serenity-Roof-671 Capstone B TMB GLH
25020165-01	H1	Jack-Open	3	1	I71710445 Job Reference (optional)

Carter Components (Sanford, NC), Sanford, NC - 27332,

Run: 8.73 S Feb 19 2025 Print: 8.730 S Feb 19 2025 MiTek Industries, Inc. Thu Feb 27 15:30:28 Page: 1
ID:?DliX295kzpSdKnYpYGx4?zgvrP-RfC?PsB70Hq3NSgPqnL8w3uITXbGKWrCDoi7J4zJC?f

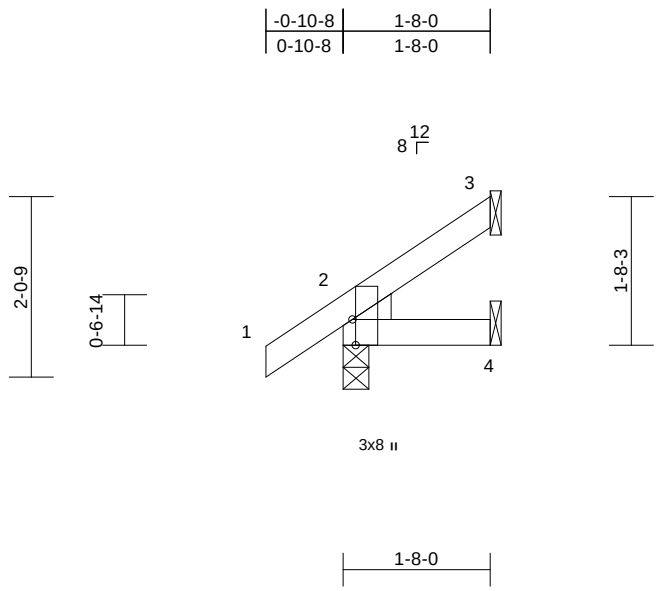

Scale = 1:26.1

Plate Offsets (X, Y): [2:0-3-8,Edge]

Loading	(psf)	Spacing	2-0-0	CSI		DEFL	in	(loc)	l/defl	L/d	PLATES	GRIP
TCLL (roof)	20.0	Plate Grip DOL	1.15	TC	0.08	Vert(LL)	0.00	7	>999	240	MT20	244/190
Snow (Pf)	20.0	Lumber DOL	1.15	BC	0.03	Vert(CT)	0.00	4-7	>999	180		
TCDL	10.0	Rep Stress Incr	YES	WB	0.00	Horz(CT)	0.00	3	n/a	n/a		
BCLL	0.0*	Code	IRC2021/TPI2014	Matrix-MP								
BCDL	10.0										Weight: 8 lb	FT = 20%

LUMBER
TOP CHORD 2x4 SP No.2
BOT CHORD 2x4 SP No.2
WEDGE Left: 2x4 SP No.3

BRACING
TOP CHORD Structural wood sheathing directly applied or 1-8-0 oc purlins.
BOT CHORD Rigid ceiling directly applied or 10-0-0 oc bracing.

REACTIONS (size) 2=0-3-8, 3= Mechanical, 4= Mechanical
Max Horiz 2=59 (LC 14)
Max Uplift 2=-13 (LC 14), 3=-24 (LC 14), 4=-1 (LC 14)
Max Grav 2=189 (LC 21), 3=49 (LC 21), 4=28 (LC 7)

FORCES (lb) - Maximum Compression/Maximum Tension
TOP CHORD 1-2=0/43, 2-3=-44/34
BOT CHORD 2-4=-22/32

NOTES
1) Wind: ASCE 7-16; Vult=130mph (3-second gust) Vasd=103mph; TCDL=6.0psf; BCDL=6.0psf; h=25ft; Cat. II; Exp B; Enclosed; MWFRS (envelope) exterior zone and C-C Exterior(2E) zone; cantilever left and right exposed ; end vertical left and right exposed;C-C for members and forces & MWFRS for reactions shown; Lumber DOL=1.60 plate grip DOL=1.60
2) TCLL: ASCE 7-16; Pr=20.0 psf (roof LL: Lum DOL=1.15 Plate DOL=1.15); Pf=20.0 psf (Lum DOL=1.15 Plate DOL=1.15); Is=1.0; Rough Cat B; Fully Exp.; Ce=0.9; Cs=1.00; Ct=1.10
3) Unbalanced snow loads have been considered for this design.
4) This truss has been designed for greater of min roof live load of 12.0 psf or 1.00 times flat roof load of 20.0 psf on overhangs non-concurrent with other live loads.
5) This truss has been designed for a 10.0 psf bottom chord live load nonconcurrent with any other live loads.
6) * This truss has been designed for a live load of 20.0psf on the bottom chord in all areas where a rectangle 3-06-00 tall by 2-00-00 wide will fit between the bottom chord and any other members.
7) Bearings are assumed to be: , Joint 2 User Defined .
8) Refer to girder(s) for truss to truss connections.
9) Provide mechanical connection (by others) of truss to bearing plate capable of withstanding 1 lb uplift at joint 4 and 24 lb uplift at joint 3.
10) One H2.5A Simpson Strong-Tie connectors recommended to connect truss to bearing walls due to UPLIFT at jt(s) 2. This connection is for uplift only and does not consider lateral forces.

LOAD CASE(S) Standard

March 3,2025

WARNING - Verify design parameters and READ NOTES ON THIS AND INCLUDED MITEK REFERENCE PAGE MII-7473 rev. 1/2/2023 BEFORE USE.
Design valid for use only with MiTek® connectors. This design is based only upon parameters shown, and is for an individual building component, not a truss system. Before use, the building designer must verify the applicability of design parameters and properly incorporate this design into the overall building design. Bracing indicated is to prevent buckling of individual truss web and/or chord members only. Additional temporary and permanent bracing is always required for stability and to prevent collapse with possible personal injury and property damage. For general guidance regarding the fabrication, storage, delivery, erection and bracing of trusses and truss systems, see **ANSI/TPI1 Quality Criteria and DSB-22** available from Truss Plate Institute (www.tpinst.org) and **BCSI Building Component Safety Information** available from the Structural Building Component Association (www.sbcacomponents.com)

ENGINEERING BY TRENCO A MiTek Affiliate
818 Soundside Road
Edenton, NC 27932

Job	Truss	Truss Type	Qty	Ply	48 Serenity-Roof-671 Capstone B TMB GLH
25020165-01	H2	Jack-Open	2	1	I71710446 Job Reference (optional)

Carter Components (Sanford, NC), Sanford, NC - 27332,

Run: 8.73 S Feb 19 2025 Print: 8.730 S Feb 19 2025 MiTek Industries, Inc. Thu Feb 27 15:30:28 Page: 1
ID:EgpgsJ34cWobf5A?Ls73lJzgvrX-RfC?PsB70Hq3NSgPqnL8w3uITXbGKWrCDoi7J4zJC?f

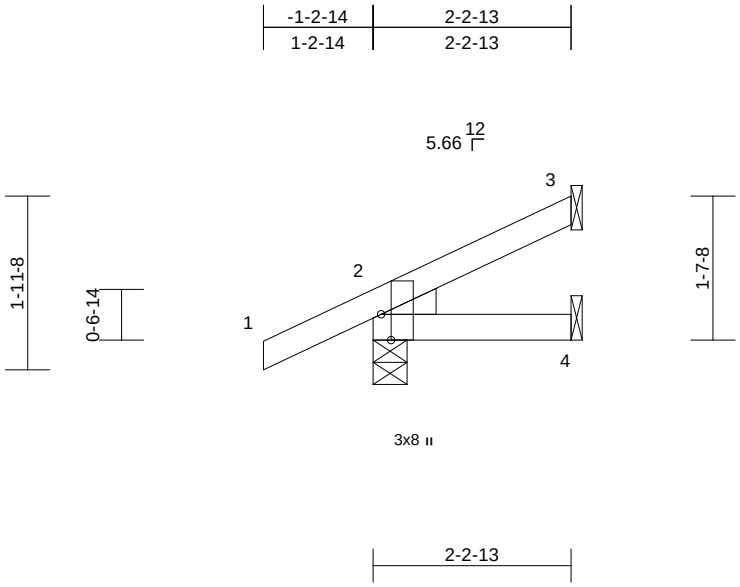

Scale = 1:26

Plate Offsets (X, Y): [2:0-3-8,Edge]

Loading	(psf)	Spacing	2-0-0	CSI		DEFL	in	(loc)	l/defl	L/d	PLATES	GRIP
TCLL (roof)	20.0	Plate Grip DOL	1.15	TC	0.15	Vert(LL)	0.00	4-7	>999	240	MT20	244/190
Snow (Pf)	20.0	Lumber DOL	1.15	BC	0.04	Vert(CT)	0.00	4-7	>999	180		
TCDL	10.0	Rep Stress Incr	YES	WB	0.00	Horz(CT)	0.00	3	n/a	n/a		
BCLL	0.0*	Code	IRC2021/TPI2014	Matrix-MP								
BCDL	10.0										Weight: 10 lb	FT = 20%

LUMBER
TOP CHORD 2x4 SP No.2
BOT CHORD 2x4 SP No.2
WEDGE Left: 2x4 SP No.3

BRACING
TOP CHORD Structural wood sheathing directly applied or 2-2-13 oc purlins.
BOT CHORD Rigid ceiling directly applied or 10-0-0 oc bracing.

REACTIONS (size) 2=0-4-9, 3= Mechanical, 4= Mechanical
Max Horiz 2=56 (LC 14)
Max Uplift 2=-31 (LC 14), 3=-23 (LC 14)
Max Grav 2=259 (LC 21), 3=63 (LC 21), 4=35 (LC 7)

FORCES (lb) - Maximum Compression/Maximum Tension
TOP CHORD 1-2=0/47, 2-3=-74/59
BOT CHORD 2-4=-39/36

NOTES
1) Wind: ASCE 7-16; Vult=130mph (3-second gust) Vasd=103mph; TCDL=6.0psf; BCDL=6.0psf; h=25ft; Cat. II; Exp B; Enclosed; MWFRS (envelope) exterior zone and C-C Corner (3) zone; cantilever left and right exposed ; end vertical left and right exposed;C-C for members and forces & MWFRS for reactions shown; Lumber DOL=1.60 plate grip DOL=1.60
2) TCLL: ASCE 7-16; Pr=20.0 psf (roof LL: Lum DOL=1.15 Plate DOL=1.15); Pf=20.0 psf (Lum DOL=1.15 Plate DOL=1.15); Is=1.0; Rough Cat B; Fully Exp.; Ce=0.9; Cs=1.00; Ct=1.10
3) Unbalanced snow loads have been considered for this design.
4) This truss has been designed for greater of min roof live load of 12.0 psf or 1.00 times flat roof load of 20.0 psf on overhangs non-concurrent with other live loads.
5) This truss has been designed for a 10.0 psf bottom chord live load nonconcurrent with any other live loads.
6) * This truss has been designed for a live load of 20.0psf on the bottom chord in all areas where a rectangle 3-06-00 tall by 2-00-00 wide will fit between the bottom chord and any other members.
7) Bearings are assumed to be: , Joint 2 User Defined .
8) Refer to girder(s) for truss to truss connections.
9) Provide mechanical connection (by others) of truss to bearing plate capable of withstanding 23 lb uplift at joint 3.
10) One H2.5A Simpson Strong-Tie connectors recommended to connect truss to bearing walls due to UPLIFT at jt(s) 2. This connection is for uplift only and does not consider lateral forces.

LOAD CASE(S) Standard

March 3,2025

WARNING - Verify design parameters and READ NOTES ON THIS AND INCLUDED MITEK REFERENCE PAGE MII-7473 rev. 1/2/2023 BEFORE USE.
Design valid for use only with MiTek® connectors. This design is based only upon parameters shown, and is for an individual building component, not a truss system. Before use, the building designer must verify the applicability of design parameters and properly incorporate this design into the overall building design. Bracing indicated is to prevent buckling of individual truss web and/or chord members only. Additional temporary and permanent bracing is always required for stability and to prevent collapse with possible personal injury and property damage. For general guidance regarding the fabrication, storage, delivery, erection and bracing of trusses and truss systems, see **ANSI/TPI1 Quality Criteria and DSB-22** available from Truss Plate Institute (www.tpinst.org) and **BCSI Building Component Safety Information** available from the Structural Building Component Association (www.sbcacomponents.com)

ENGINEERING BY TRENCO A MiTek Affiliate
818 Soundside Road
Edenton, NC 27932

Job	Truss	Truss Type	Qty	Ply	48 Serenity-Roof-671 Capstone B TMB GLH
25020165-01	V1	Valley	1	1	I71710447 Job Reference (optional)

Carter Components (Sanford, NC), Sanford, NC - 27332,

Run: 8.73 S Feb 19 2025 Print: 8.730 S Feb 19 2025 MiTek Industries, Inc. Thu Feb 27 15:30:29 Page: 1
ID:pqc6fTqXKMHRG1e9AfmNx5zgvrr-RfC?PsB70Hq3NSgPqnL8w3uITXbGKWrCDoi7J4zJC?f

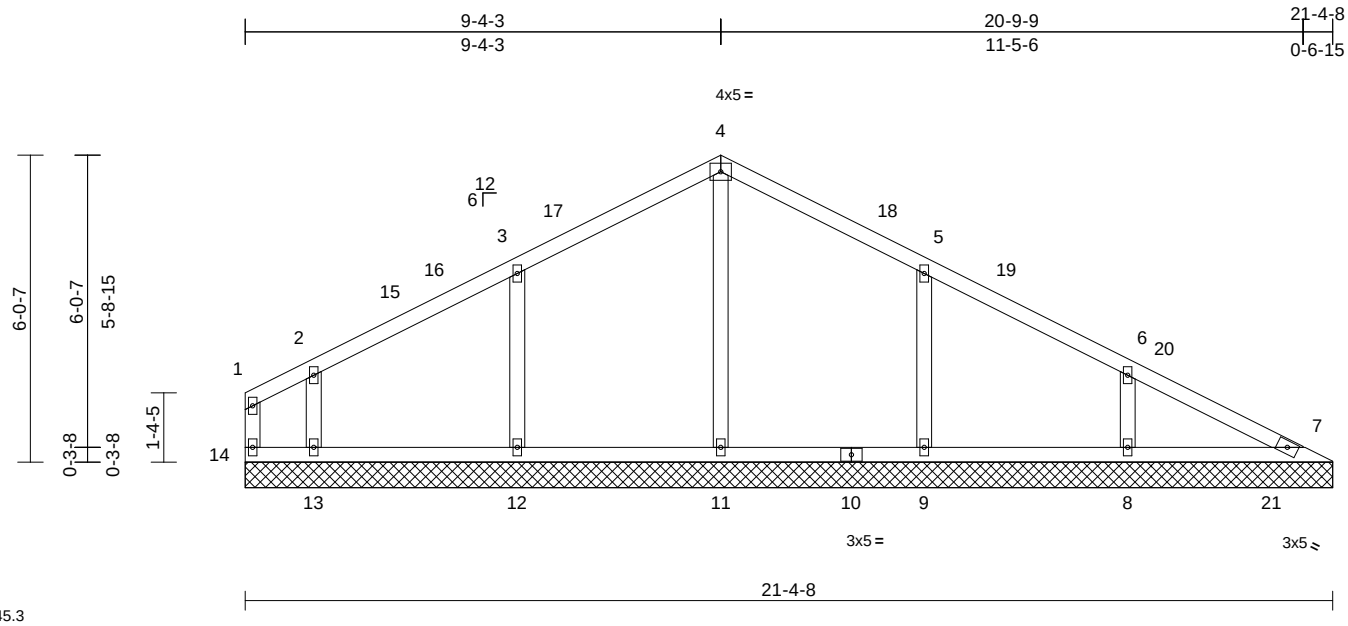

Scale = 1:45.3

Loading	(psf)	Spacing	2-0-0	CSI		DEFL	in	(loc)	l/defl	L/d	PLATES	GRIP
TCLL (roof)	20.0	Plate Grip DOL	1.15	TC	0.31	Vert(LL)	n/a	-	n/a	999	MT20	244/190
Snow (Pf)	20.0	Lumber DOL	1.15	BC	0.17	Vert(TL)	n/a	-	n/a	999		
TCDL	10.0	Rep Stress Incr	YES	WB	0.15	Horiz(TL)	0.00	7	n/a	n/a		
BCLL	0.0*	Code	IRC2021/TPI2014	Matrix-SH								
BCDL	10.0										Weight: 91 lb	FT = 20%

LUMBER

TOP CHORD	2x4 SP No.2
BOT CHORD	2x4 SP No.2
WEBS	2x4 SP No.3
OTHERS	2x4 SP No.3

BRACING

TOP CHORD	Structural wood sheathing directly applied or 6-0-0 oc purlins, except end verticals.
BOT CHORD	Rigid ceiling directly applied or 6-0-0 oc bracing.

REACTIONS (size) 7=21-4-8, 8=21-4-8, 9=21-4-8, 11=21-4-8, 12=21-4-8, 13=21-4-8, 14=21-4-8
Max Horiz 14=-95 (LC 10)
Max Uplift 7=-12 (LC 14), 8=-88 (LC 15), 9=-97 (LC 15), 12=-99 (LC 14), 13=-95 (LC 14), 14=-27 (LC 12)
Max Grav 7=115 (LC 29), 8=345 (LC 3), 9=479 (LC 6), 11=396 (LC 6), 12=493 (LC 5), 13=283 (LC 24), 14=44 (LC 14)

FORCES (lb) - Maximum Compression/Maximum Tension

TOP CHORD	1-14=-36/16, 1-2=-44/43, 2-3=-70/75, 3-4=-104/139, 4-5=-103/141, 5-6=-74/94, 6-7=-86/77
BOT CHORD	13-14=-40/96, 12-13=-40/96, 11-12=-40/96, 9-11=-40/96, 8-9=-40/96, 7-8=-40/96
WEBS	4-11=-227/0, 3-12=-396/150, 2-13=-208/124, 5-9=-389/147, 6-8=-251/129

NOTES

1) Unbalanced roof live loads have been considered for this design.
2) Wind: ASCE 7-16; Vult=130mph (3-second gust) Vasd=103mph; TCDL=6.0psf; BCDL=6.0psf; h=25ft; Cat. II; Exp B; Enclosed; MWFRS (envelope) exterior zone and C-C Exterior(2E) 0-1-12 to 3-1-12, Interior (1) 3-1-12 to 6-4-3, Exterior(2R) 6-4-3 to 12-4-3, Interior (1) 12-4-3 to 17-9-7, Exterior(2E) 17-9-7 to 20-9-7 zone; cantilever left and right exposed ; end vertical left and right exposed;C-C for members and forces & MWFRS for reactions shown; Lumber DOL=1.60 plate grip DOL=1.60
3) Truss designed for wind loads in the plane of the truss only. For studs exposed to wind (normal to the face), see Standard Industry Gable End Details as applicable, or consult qualified building designer as per ANSI/TPI 1.
4) TCLL: ASCE 7-16; Pr=20.0 psf (roof LL: Lum DOL=1.15 Plate DOL=1.15); Pf=20.0 psf (Lum DOL=1.15 Plate DOL=1.15); Is=1.0; Rough Cat B; Fully Exp.; Ce=0.9; Cs=1.00; Ct=1.10
5) Unbalanced snow loads have been considered for this design.
6) All plates are 2x4 MT20 unless otherwise indicated.
7) Gable requires continuous bottom chord bearing.
8) Gable studs spaced at 4-0-0 oc.
9) This truss has been designed for a 10.0 psf bottom chord live load nonconcurrent with any other live loads.
10) * This truss has been designed for a live load of 20.0psf on the bottom chord in all areas where a rectangle 3-06-00 tall by 2-00-00 wide will fit between the bottom chord and any other members, with BCDL = 10.0psf.
11) Provide mechanical connection (by others) of truss to bearing plate capable of withstanding 27 lb uplift at joint 14, 12 lb uplift at joint 7, 99 lb uplift at joint 12, 95 lb uplift at joint 13, 97 lb uplift at joint 9 and 88 lb uplift at joint 8.

LOAD CASE(S) Standard

March 3,2025

WARNING - Verify design parameters and READ NOTES ON THIS AND INCLUDED MITEK REFERENCE PAGE MII-7473 rev. 1/2/2023 BEFORE USE.
Design valid for use only with MiTek® connectors. This design is based only upon parameters shown, and is for an individual building component, not a truss system. Before use, the building designer must verify the applicability of design parameters and properly incorporate this design into the overall building design. Bracing indicated is to prevent buckling of individual truss web and/or chord members only. Additional temporary and permanent bracing is always required for stability and to prevent collapse with possible personal injury and property damage. For general guidance regarding the fabrication, storage, delivery, erection and bracing of trusses and truss systems, see **ANSI/TPI1 Quality Criteria and DSB-22** available from Truss Plate Institute (www.tpinst.org) and **BCSI Building Component Safety Information** available from the Structural Building Component Association (www.sbcacomponents.com)

ENGINEERING BY TRENCO A MiTek Affiliate
818 Soundside Road
Edenton, NC 27932

Job	Truss	Truss Type	Qty	Ply	48 Serenity-Roof-671 Capstone B TMB GLH
25020165-01	V2	Valley	1	1	I71710448 Job Reference (optional)

Carter Components (Sanford, NC), Sanford, NC - 27332, Run: 8.73 S Feb 19 2025 Print: 8.730 S Feb 19 2025 MiTek Industries, Inc. Thu Feb 27 15:30:29 Page: 1
ID:TsoDcmmOVqf89FlCO6ACE2zgvrw-RfC?PsB70Hq3NSgPqnL8w3uITXbGKWrCDoi7J4zJC?f

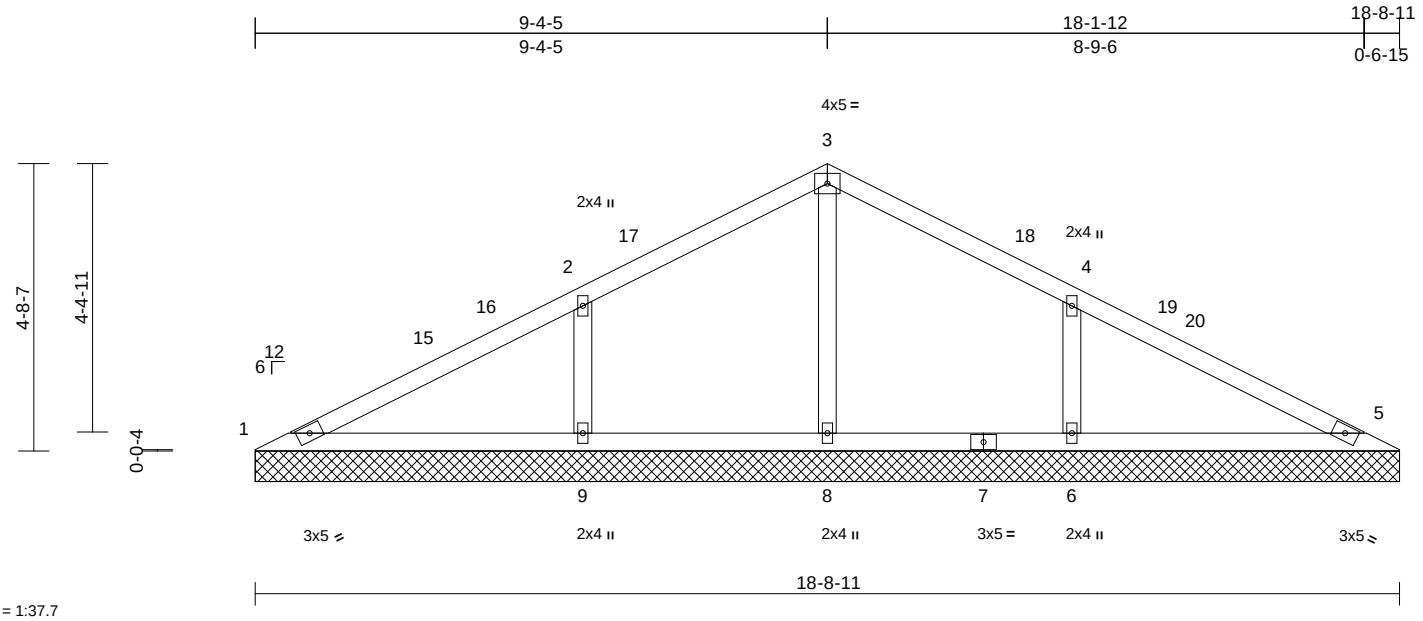

Scale = 1:37.7

Loading	(psf)	Spacing	2-0-0	CSI		DEFL	in	(loc)	l/defl	L/d	PLATES	GRIP
TCLL (roof)	20.0	Plate Grip DOL	1.15	TC	0.47	Vert(LL)	n/a	-	n/a	999	MT20	244/190
Snow (Pf)	20.0	Lumber DOL	1.15	BC	0.24	Vert(TL)	n/a	-	n/a	999		
TCDL	10.0	Rep Stress Incr	YES	WB	0.20	Horiz(TL)	-0.01	5	n/a	n/a		
BCLL	0.0*	Code	IRC2021/TPI2014	Matrix-MSH								
BCDL	10.0										Weight: 70 lb	FT = 20%

LUMBER
TOP CHORD 2x4 SP No.2
BOT CHORD 2x4 SP No.2
OTHERS 2x4 SP No.3

BRACING
TOP CHORD Structural wood sheathing directly applied or 10-0-0 oc purlins.
BOT CHORD Rigid ceiling directly applied or 6-0-0 oc bracing.

REACTIONS (size) 1=18-8-11, 5=18-8-11, 6=18-8-11, 8=18-8-11, 9=18-8-11
Max Horiz 1=75 (LC 14)
Max Uplift 1=-41 (LC 36), 6=-121 (LC 15), 9=-126 (LC 14)
Max Grav 1=106 (LC 35), 5=1 (LC 1), 6=567 (LC 21), 8=557 (LC 21), 9=574 (LC 20)

FORCES (lb) - Maximum Compression/Maximum Tension
TOP CHORD 1-2=-141/406, 2-3=0/377, 3-4=0/396, 4-5=-125/421
BOT CHORD 1-9=-312/121, 8-9=-312/95, 6-8=-312/95, 5-6=-312/95
WEBS 3-8=-504/68, 2-9=-440/170, 4-6=-438/171

NOTES
1) Unbalanced roof live loads have been considered for this design.
2) Wind: ASCE 7-16; Vult=130mph (3-second gust) Vasd=103mph; TCDL=6.0psf; BCDL=6.0psf; h=25ft; Cat. II; Exp B; Enclosed; MWFRS (envelope) exterior zone and C-C Exterior(2E) 0-0-8 to 3-0-8, Interior (1) 3-0-8 to 6-4-13, Exterior(2R) 6-4-13 to 12-4-13, Interior (1) 12-4-13 to 15-2-4, Exterior(2E) 15-2-4 to 18-2-4 zone; cantilever left and right exposed ; end vertical left and right exposed;C-C for members and forces & MWFRS for reactions shown; Lumber DOL=1.60 plate grip DOL=1.60
3) Truss designed for wind loads in the plane of the truss only. For studs exposed to wind (normal to the face), see Standard Industry Gable End Details as applicable, or consult qualified building designer as per ANSI/TPI 1.
4) TCLL: ASCE 7-16; Pr=20.0 psf (roof LL: Lum DOL=1.15 Plate DOL=1.15); Pf=20.0 psf (Lum DOL=1.15 Plate DOL=1.15); Is=1.0; Rough Cat B; Fully Exp.; Ce=0.9; Cs=1.00; Ct=1.10
5) Unbalanced snow loads have been considered for this design.
6) Gable requires continuous bottom chord bearing.
7) Gable studs spaced at 4-0-0 oc.
8) This truss has been designed for a 10.0 psf bottom chord live load nonconcurrent with any other live loads.
9) * This truss has been designed for a live load of 20.0psf on the bottom chord in all areas where a rectangle 3-06-00 tall by 2-00-00 wide will fit between the bottom chord and any other members.
10) Provide mechanical connection (by others) of truss to bearing plate capable of withstanding 41 lb uplift at joint 1, 126 lb uplift at joint 9 and 121 lb uplift at joint 6.

LOAD CASE(S) Standard

March 3,2025

WARNING - Verify design parameters and READ NOTES ON THIS AND INCLUDED MITEK REFERENCE PAGE MII-7473 rev. 1/2/2023 BEFORE USE.
Design valid for use only with MiTek® connectors. This design is based only upon parameters shown, and is for an individual building component, not a truss system. Before use, the building designer must verify the applicability of design parameters and properly incorporate this design into the overall building design. Bracing indicated is to prevent buckling of individual truss web and/or chord members only. Additional temporary and permanent bracing is always required for stability and to prevent collapse with possible personal injury and property damage. For general guidance regarding the fabrication, storage, delivery, erection and bracing of trusses and truss systems, see **ANSI/TPI1 Quality Criteria and DSB-22** available from Truss Plate Institute (www.tpinst.org) and **BCSI Building Component Safety Information** available from the Structural Building Component Association (www.sbcacomponents.com)

ENGINEERING BY TRENCO A MiTek Affiliate
818 Soundside Road
Edenton, NC 27932

Job	Truss	Truss Type	Qty	Ply	48 Serenity-Roof-671 Capstone B TMB GLH
25020165-01	V3	Valley	1	1	I71710449 Job Reference (optional)

Carter Components (Sanford, NC), Sanford, NC - 27332,

Run: 8.73 S Feb 19 2025 Print: 8.730 S Feb 19 2025 MiTek Industries, Inc. Thu Feb 27 15:30:29 Page: 1
ID:a5ZimOjuRb8iheSR9H6F4Czgvs_-RfC?PsB70Hq3NSgPqnL8w3uITXbGKWrCDoi7J4zJC?f

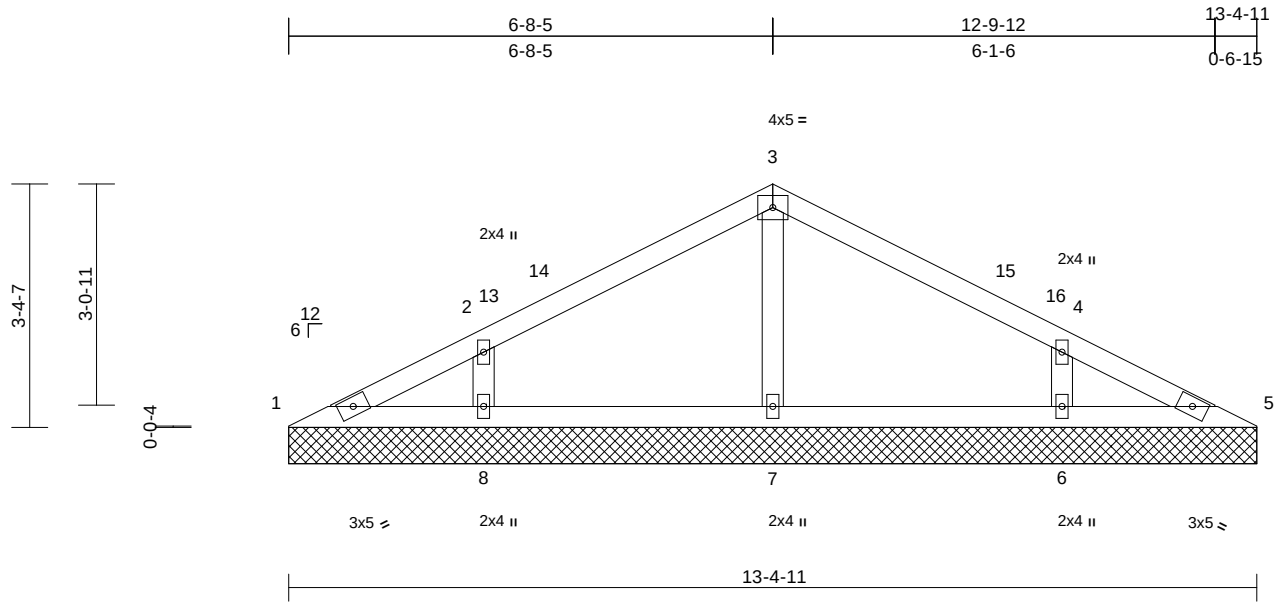

Scale = 1:31.9

Loading	(psf)	Spacing	2-0-0	CSI		DEFL	in	(loc)	l/defl	L/d	PLATES	GRIP
TCLL (roof)	20.0	Plate Grip DOL	1.15	TC	0.30	Vert(LL)	n/a	-	n/a	999	MT20	244/190
Snow (Pf)	20.0	Lumber DOL	1.15	BC	0.12	Vert(TL)	n/a	-	n/a	999		
TCDL	10.0	Rep Stress Incr	YES	WB	0.08	Horiz(TL)	0.00	5	n/a	n/a		
BCLL	0.0*	Code	IRC2021/TPI2014	Matrix-MSH								
BCDL	10.0										Weight: 47 lb	FT = 20%

LUMBER

TOP CHORD 2x4 SP No.2
BOT CHORD 2x4 SP No.2
OTHERS 2x4 SP No.3

BRACING

TOP CHORD Structural wood sheathing directly applied or 6-0-0 oc purlins.
BOT CHORD Rigid ceiling directly applied or 6-0-0 oc bracing.

REACTIONS (size) 1=13-4-11, 5=13-4-11, 6=13-4-11, 7=13-4-11, 8=13-4-11
Max Horiz 1=51 (LC 14)
Max Uplift 1=-8 (LC 15), 5=-1 (LC 15), 6=-88 (LC 15), 8=-89 (LC 14)
Max Grav 1=73 (LC 1), 5=73 (LC 1), 6=453 (LC 21), 7=310 (LC 20), 8=453 (LC 20)

FORCES (lb) - Maximum Compression/Maximum Tension
TOP CHORD 1-2=-88/65, 2-3=-108/93, 3-4=-108/93, 4-5=-88/65
BOT CHORD 1-8=-15/76, 7-8=-15/38, 6-7=-15/38, 5-6=-15/70
WEBS 3-7=-226/81, 2-8=-387/187, 4-6=-387/187

NOTES

1) Unbalanced roof live loads have been considered for this design.
2) Wind: ASCE 7-16; Vult=130mph (3-second gust) Vasd=103mph; TCDL=6.0psf; BCDL=6.0psf; h=25ft; Cat. II; Exp B; Enclosed; MWFRS (envelope) exterior zone and C-C Exterior(2E) 0-0-8 to 3-0-8, Interior (1) 3-0-8 to 3-8-13, Exterior(2R) 3-8-13 to 9-8-13, Interior (1) 9-8-13 to 10-5-3, Exterior(2E) 10-5-3 to 13-5-3 zone; cantilever left and right exposed ; end vertical left and right exposed;C-C for members and forces & MWFRS for reactions shown; Lumber DOL=1.60 plate grip DOL=1.60
3) Truss designed for wind loads in the plane of the truss only. For studs exposed to wind (normal to the face), see Standard Industry Gable End Details as applicable, or consult qualified building designer as per ANSI/TPI 1.
4) TCLL: ASCE 7-16; Pr=20.0 psf (roof LL: Lum DOL=1.15 Plate DOL=1.15); Pf=20.0 psf (Lum DOL=1.15 Plate DOL=1.15); Is=1.0; Rough Cat B; Fully Exp.; Ce=0.9; Cs=1.00; Ct=1.10
5) Unbalanced snow loads have been considered for this design.
6) Gable requires continuous bottom chord bearing.
7) Gable studs spaced at 4-0-0 oc.
8) This truss has been designed for a 10.0 psf bottom chord live load nonconcurrent with any other live loads.
9) * This truss has been designed for a live load of 20.0psf on the bottom chord in all areas where a rectangle 3-06-00 tall by 2-00-00 wide will fit between the bottom chord and any other members.
10) Provide mechanical connection (by others) of truss to bearing plate capable of withstanding 8 lb uplift at joint 1, 1 lb uplift at joint 5, 89 lb uplift at joint 8 and 88 lb uplift at joint 6.

LOAD CASE(S) Standard

March 3,2025

WARNING - Verify design parameters and READ NOTES ON THIS AND INCLUDED MITEK REFERENCE PAGE MII-7473 rev. 1/2/2023 BEFORE USE.
Design valid for use only with MiTek® connectors. This design is based only upon parameters shown, and is for an individual building component, not a truss system. Before use, the building designer must verify the applicability of design parameters and properly incorporate this design into the overall building design. Bracing indicated is to prevent buckling of individual truss web and/or chord members only. Additional temporary and permanent bracing is always required for stability and to prevent collapse with possible personal injury and property damage. For general guidance regarding the fabrication, storage, delivery, erection and bracing of trusses and truss systems, see **ANSI/TPI1 Quality Criteria and DSB-22** available from Truss Plate Institute (www.tpinst.org) and **BCSI Building Component Safety Information** available from the Structural Building Component Association (www.sbcacomponents.com)

ENGINEERING BY TRENCO A MiTek Affiliate
818 Soundside Road
Edenton, NC 27932

Job	Truss	Truss Type	Qty	Ply	48 Serenity-Roof-671 Capstone B TMB GLH
25020165-01	V4	Valley	1	1	I71710450 Job Reference (optional)

Carter Components (Sanford, NC), Sanford, NC - 27332,

Run: 8.73 S Feb 19 2025 Print: 8.730 S Feb 19 2025 MiTek Industries, Inc. Thu Feb 27 15:30:29 Page: 1
ID:ejRyLjhdw_u?RKI21s3n_nzgvs0-RfC?PsB70Hq3NSgPqnL8w3uITXbGKWrCDoi7J4zJC?f

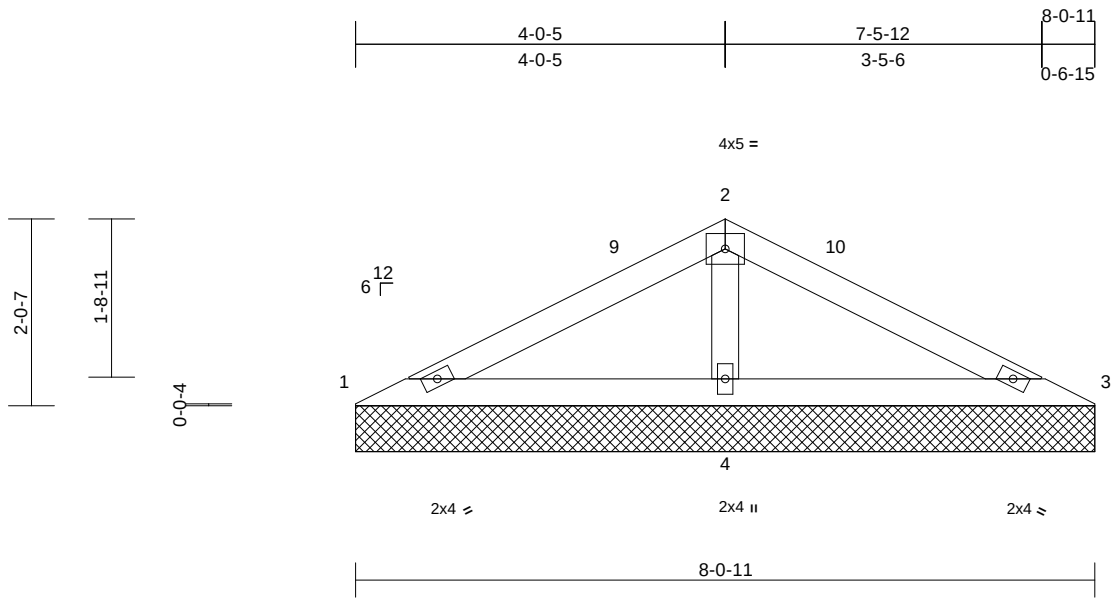

Scale = 1:25.1

Loading	(psf)	Spacing	2-0-0	CSI		DEFL	in	(loc)	l/defl	L/d	PLATES	GRIP
TCLL (roof)	20.0	Plate Grip DOL	1.15	TC	0.28	Vert(LL)	n/a	-	n/a	999	MT20	244/190
Snow (Pf)	20.0	Lumber DOL	1.15	BC	0.29	Vert(TL)	n/a	-	n/a	999		
TCDL	10.0	Rep Stress Incr	YES	WB	0.08	Horiz(TL)	0.00	4	n/a	n/a		
BCLL	0.0*	Code	IRC2021/TPI2014	Matrix-MP								
BCDL	10.0										Weight: 26 lb	FT = 20%

LUMBER
TOP CHORD 2x4 SP No.2
BOT CHORD 2x4 SP No.2
OTHERS 2x4 SP No.3

BRACING
TOP CHORD Structural wood sheathing directly applied or 8-0-11 oc purlins.
BOT CHORD Rigid ceiling directly applied or 6-0-0 oc bracing.

REACTIONS (size) 1=8-0-11, 3=8-0-11, 4=8-0-11
Max Horiz 1=30 (LC 14)
Max Uplift 1=-9 (LC 14), 3=-16 (LC 15), 4=-45 (LC 14)
Max Grav 1=114 (LC 20), 3=114 (LC 21), 4=553 (LC 21)

FORCES (lb) - Maximum Compression/Maximum Tension
TOP CHORD 1-2=-127/288, 2-3=-127/288
BOT CHORD 1-4=-246/162, 3-4=-246/162
WEBS 2-4=-410/224

NOTES
1) Unbalanced roof live loads have been considered for this design.
2) Wind: ASCE 7-16; Vult=130mph (3-second gust) Vasd=103mph; TCDL=6.0psf; BCDL=6.0psf; h=25ft; Cat. II; Exp B; Enclosed; MWFRS (envelope) exterior zone and C-C Exterior(2E) 0-0-8 to 3-0-8, Exterior(2R) 3-0-8 to 5-1-3, Exterior(2E) 5-1-3 to 8-1-3 zone; cantilever left and right exposed ; end vertical left and right exposed;C-C for members and forces & MWFRS for reactions shown; Lumber DOL=1.60 plate grip DOL=1.60
3) Truss designed for wind loads in the plane of the truss only. For studs exposed to wind (normal to the face), see Standard Industry Gable End Details as applicable, or consult qualified building designer as per ANSI/TPI 1.
4) TCLL: ASCE 7-16; Pr=20.0 psf (roof LL: Lum DOL=1.15 Plate DOL=1.15); Pf=20.0 psf (Lum DOL=1.15 Plate DOL=1.15); Is=1.0; Rough Cat B; Fully Exp.; Ce=0.9; Cs=1.00; Ct=1.10
5) Unbalanced snow loads have been considered for this design.
6) Gable requires continuous bottom chord bearing.
7) Gable studs spaced at 4-0-0 oc.
8) This truss has been designed for a 10.0 psf bottom chord live load nonconcurrent with any other live loads.
9) * This truss has been designed for a live load of 20.0psf on the bottom chord in all areas where a rectangle 3-06-00 tall by 2-00-00 wide will fit between the bottom chord and any other members.
10) Provide mechanical connection (by others) of truss to bearing plate capable of withstanding 9 lb uplift at joint 1, 16 lb uplift at joint 3 and 45 lb uplift at joint 4.

LOAD CASE(S) Standard

March 3,2025

WARNING - Verify design parameters and READ NOTES ON THIS AND INCLUDED MITEK REFERENCE PAGE MII-7473 rev. 1/2/2023 BEFORE USE.
Design valid for use only with MiTek® connectors. This design is based only upon parameters shown, and is for an individual building component, not a truss system. Before use, the building designer must verify the applicability of design parameters and properly incorporate this design into the overall building design. Bracing indicated is to prevent buckling of individual truss web and/or chord members only. Additional temporary and permanent bracing is always required for stability and to prevent collapse with possible personal injury and property damage. For general guidance regarding the fabrication, storage, delivery, erection and bracing of trusses and truss systems, see **ANSI/TPI1 Quality Criteria and DSB-22** available from Truss Plate Institute (www.tpinst.org) and **BCSI Building Component Safety Information** available from the Structural Building Component Association (www.sbcacomponents.com)

ENGINEERING BY TRENCO A MiTek Affiliate
818 Soundside Road
Edenton, NC 27932

Job	Truss	Truss Type	Qty	Ply	48 Serenity-Roof-671 Capstone B TMB GLH
25020165-01	V5	Valley	1	1	I71710451 Job Reference (optional)

Carter Components (Sanford, NC), Sanford, NC - 27332,

Run: 8.73 S Feb 19 2025 Print: 8.730 S Feb 19 2025 MiTek Industries, Inc. Thu Feb 27 15:30:29 Page: 1
ID:lxCRWLe7slOZyj_Ho0?rqxzgvs4-RfC?PsB70Hq3NSgPqnL8w3uITXbGKWrCDoi7J4zJC?f

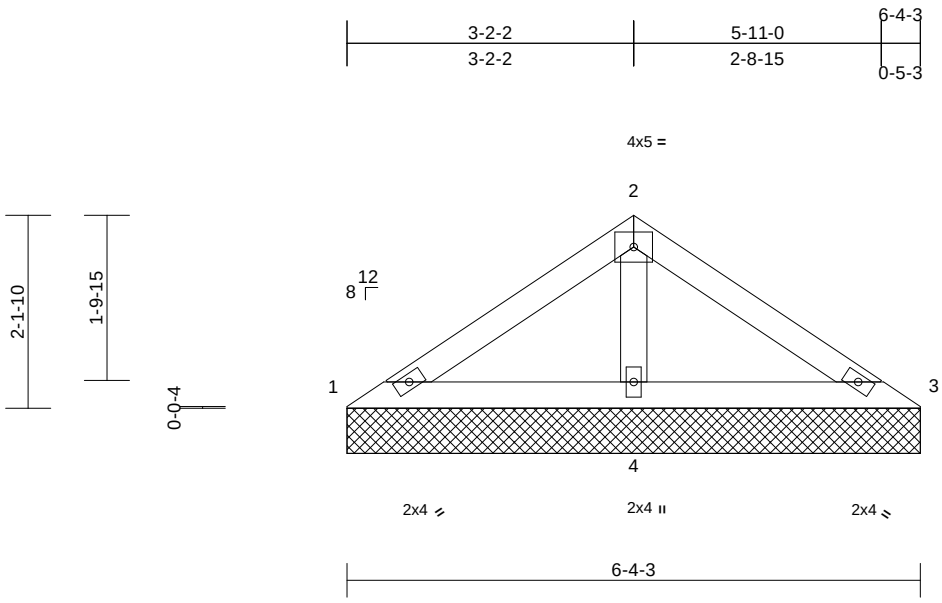

Scale = 1:25.5

Loading	(psf)	Spacing	2-0-0	CSI		DEFL	in	(loc)	l/defl	L/d	PLATES	GRIP
TCLL (roof)	20.0	Plate Grip DOL	1.15	TC	0.17	Vert(LL)	n/a	-	n/a	999	MT20	244/190
Snow (Pf)	20.0	Lumber DOL	1.15	BC	0.19	Vert(TL)	n/a	-	n/a	999		
TCDL	10.0	Rep Stress Incr	YES	WB	0.06	Horiz(TL)	0.00	4	n/a	n/a		
BCLL	0.0*	Code	IRC2021/TPI2014	Matrix-MP								
BCDL	10.0										Weight: 21 lb	FT = 20%

LUMBER
TOP CHORD 2x4 SP No.2
BOT CHORD 2x4 SP No.2
OTHERS 2x4 SP No.3

BRACING
TOP CHORD Structural wood sheathing directly applied or 6-4-3 oc purlins.
BOT CHORD Rigid ceiling directly applied or 6-0-0 oc bracing.

REACTIONS (size) 1=6-4-3, 3=6-4-3, 4=6-4-3
Max Horiz 1=46 (LC 11)
Max Uplift 1=-2 (LC 14), 3=-10 (LC 15), 4=-41 (LC 14)
Max Grav 1=100 (LC 20), 3=100 (LC 21), 4=421 (LC 20)

FORCES (lb) - Maximum Compression/Maximum Tension
TOP CHORD 1-2=-97/180, 2-3=-97/180
BOT CHORD 1-4=-153/111, 3-4=-153/111
WEBS 2-4=-323/141

NOTES
1) Unbalanced roof live loads have been considered for this design.
2) Wind: ASCE 7-16; Vult=130mph (3-second gust) Vasd=103mph; TCDL=6.0psf; BCDL=6.0psf; h=25ft; Cat. II; Exp B; Enclosed; MWFRS (envelope) exterior zone and C-C Exterior(2E) zone; cantilever left and right exposed ; end vertical left and right exposed;C-C for members and forces & MWFRS for reactions shown; Lumber DOL=1.60 plate grip DOL=1.60
3) Truss designed for wind loads in the plane of the truss only. For studs exposed to wind (normal to the face), see Standard Industry Gable End Details as applicable, or consult qualified building designer as per ANSI/TPI 1.
4) TCLL: ASCE 7-16; Pr=20.0 psf (roof LL: Lum DOL=1.15 Plate DOL=1.15); Pf=20.0 psf (Lum DOL=1.15 Plate DOL=1.15); Is=1.0; Rough Cat B; Fully Exp.; Ce=0.9; Cs=1.00; Ct=1.10
5) Unbalanced snow loads have been considered for this design.
6) Gable requires continuous bottom chord bearing.
7) Gable studs spaced at 4-0-0 oc.
8) This truss has been designed for a 10.0 psf bottom chord live load nonconcurrent with any other live loads.
9) * This truss has been designed for a live load of 20.0psf on the bottom chord in all areas where a rectangle 3-06-00 tall by 2-00-00 wide will fit between the bottom chord and any other members.
10) Provide mechanical connection (by others) of truss to bearing plate capable of withstanding 2 lb uplift at joint 1, 10 lb uplift at joint 3 and 41 lb uplift at joint 4.

LOAD CASE(S) Standard

March 3,2025

WARNING - Verify design parameters and READ NOTES ON THIS AND INCLUDED MITEK REFERENCE PAGE MII-7473 rev. 1/2/2023 BEFORE USE.
Design valid for use only with MiTek® connectors. This design is based only upon parameters shown, and is for an individual building component, not a truss system. Before use, the building designer must verify the applicability of design parameters and properly incorporate this design into the overall building design. Bracing indicated is to prevent buckling of individual truss web and/or chord members only. Additional temporary and permanent bracing is always required for stability and to prevent collapse with possible personal injury and property damage. For general guidance regarding the fabrication, storage, delivery, erection and bracing of trusses and truss systems, see **ANSI/TPI1 Quality Criteria and DSB-22** available from Truss Plate Institute (www.tpinst.org) and **BCSI Building Component Safety Information** available from the Structural Building Component Association (www.sbcacomponents.com)

ENGINEERING BY TRENCO A MiTek Affiliate
818 Soundside Road
Edenton, NC 27932

Symbols

PLATE LOCATION AND ORIENTATION

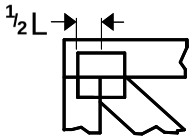

Center plate on joint unless x, y offsets are indicated. Dimensions are in ft-in-sixteenths. Apply plates to both sides of truss and fully embed teeth.

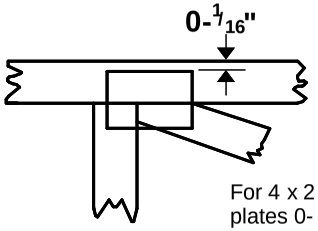

For 4 x 2 orientation, locate plates 0- 1/16" from outside edge of truss.

This symbol indicates the required direction of slots in connector plates.

* Plate location details available in MiTek software or upon request.

PLATE SIZE

4 x 4

The first dimension is the plate width measured perpendicular to slots. Second dimension is the length parallel to slots.

LATERAL BRACING LOCATION

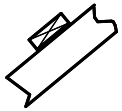

Indicated by symbol shown and/or by text in the bracing section of the output. Use T or I bracing if indicated.

BEARING

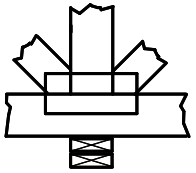

Indicates location where bearings (supports) occur. Icons vary but reaction section indicates joint number/letter where bearings occur. Min size shown is for crushing only.

Industry Standards:

ANSI/TPI1: National Design Specification for Metal Plate Connected Wood Truss Construction.
DSB-22: Design Standard for Bracing.
BCSI: Building Component Safety Information, Guide to Good Practice for Handling, Installing, Restraining & Bracing of Metal Plate Connected Wood Trusses.

Numbering System

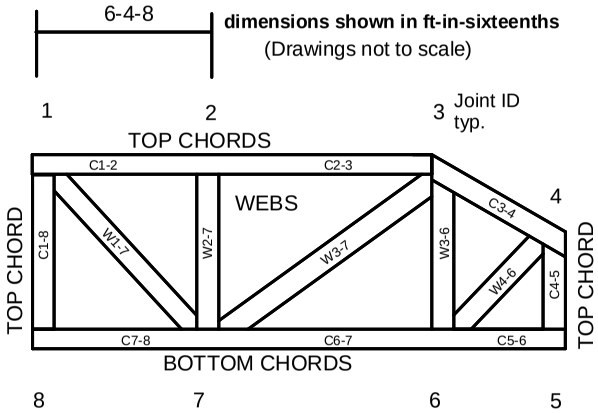

JOINTS ARE GENERALLY NUMBERED/LETTERED CLOCKWISE AROUND THE TRUSS STARTING AT THE JOINT FARTHEST TO THE LEFT.

CHORDS AND WEBS ARE IDENTIFIED BY END JOINT NUMBERS/LETTERS.

Product Code Approvals

ICC-ES Reports:

ESR-1988, ESR-2362, ESR-2685, ESR-3282
ESR-4722, ESL-1388

Design General Notes

Trusses are designed for wind loads in the plane of the truss unless otherwise shown.

Lumber design values are in accordance with ANSI/TPI 1 section 6.3 These truss designs rely on lumber values established by others.

© 2023 MiTek® All Rights Reserved

MiTek®

ENGINEERING BY TRENCO
A MiTek Affiliate

General Safety Notes

Failure to Follow Could Cause Property Damage or Personal Injury

1. Additional stability bracing for truss system, e.g. diagonal or X-bracing, is always required. See BCSI.
2. Truss bracing must be designed by an engineer. For wide truss spacing, individual lateral braces themselves may require bracing, or alternative Tor I bracing should be considered.
3. Never exceed the design loading shown and never stack materials on inadequately braced trusses.
4. Provide copies of this truss design to the building designer, erection supervisor, property owner and all other interested parties.
5. Cut members to bear tightly against each other.
6. Place plates on each face of truss at each joint and embed fully. Knots and wane at joint locations are regulated by ANSI/TPI 1.
7. Design assumes trusses will be suitably protected from the environment in accord with ANSI/TPI 1.
8. Unless otherwise noted, moisture content of lumber shall not exceed 19% at time of fabrication.
9. Unless expressly noted, this design is not applicable for use with fire retardant, preservative treated, or green lumber.
10. Camber is a non-structural consideration and is the responsibility of truss fabricator. General practice is to camber for dead load deflection.
11. Plate type, size, orientation and location dimensions indicated are minimum plating requirements.
12. Lumber used shall be of the species and size, and in all respects, equal to or better than that specified.
13. Top chords must be sheathed or purlins provided at spacing indicated on design.
14. Bottom chords require lateral bracing at 10 ft. spacing, or less, if no ceiling is installed, unless otherwise noted.
15. Connections not shown are the responsibility of others.
16. Do not cut or alter truss member or plate without prior approval of an engineer.
17. Install and load vertically unless indicated otherwise.
18. Use of green or treated lumber may pose unacceptable environmental, health or performance risks. Consult with project engineer before use.
19. Review all portions of this design (front, back, words and pictures) before use. Reviewing pictures alone is not sufficient.
20. Design assumes manufacture in accordance with ANSI/TPI 1 Quality Criteria.
21. The design does not take into account any dynamic or other loads other than those expressly stated.