ENGINEERING BY TRENCO
A MiTek Affiliate

Trenco
818 Soundside Rd
Edenton, NC 27932

Re: 25-0542-A
FFF-LOT #51 Roof

The truss drawing(s) referenced below have been prepared by Truss Engineering Co. under my direct supervision based on the parameters provided by Riverside Roof Truss.

Pages or sheets covered by this seal: I72048247 thru I72048267

My license renewal date for the state of North Carolina is December 31, 2025.

North Carolina COA: C-0844

NORTH CAROLINA PROFESSIONAL SEAL 036322 ENGINEER ERIC A. GILBERT

March 17,2025

Gilbert, Eric

IMPORTANT NOTE: The seal on these truss component designs is a certification that the engineer named is licensed in the jurisdiction(s) identified and that the designs comply with ANSI/TPI 1. These designs are based upon parameters shown (e.g., loads, supports, dimensions, shapes and design codes), which were given to MiTek or TRENCO. Any project specific information included is for MiTek's or TRENCO's customers file reference purpose only, and was not taken into account in the preparation of these designs. MiTek or TRENCO has not independently verified the applicability of the design parameters or the designs for any particular building. Before use, the building designer should verify applicability of design parameters and properly incorporate these designs into the overall building design per ANSI/TPI 1, Chapter 2.

Job	Truss	Truss Type	Qty	Ply	FFF-LOT #51 Roof
25-0542-A	M01	MONOPITCH	9	1	I72048247 Job Reference (optional)

Riverside Roof Truss, LLC, Danville, Va - 24541, 8.730 s Feb 19 2025 MiTek Industries, Inc. Fri Mar 14 12:13:57 2025 Page 1
ID:BxI2MwYau_NHkbraGCmHIoyOvst-OKyPYXg6fLbUWQJzKfpbiyBqgZZSfa8DoPNkpYzb0oe

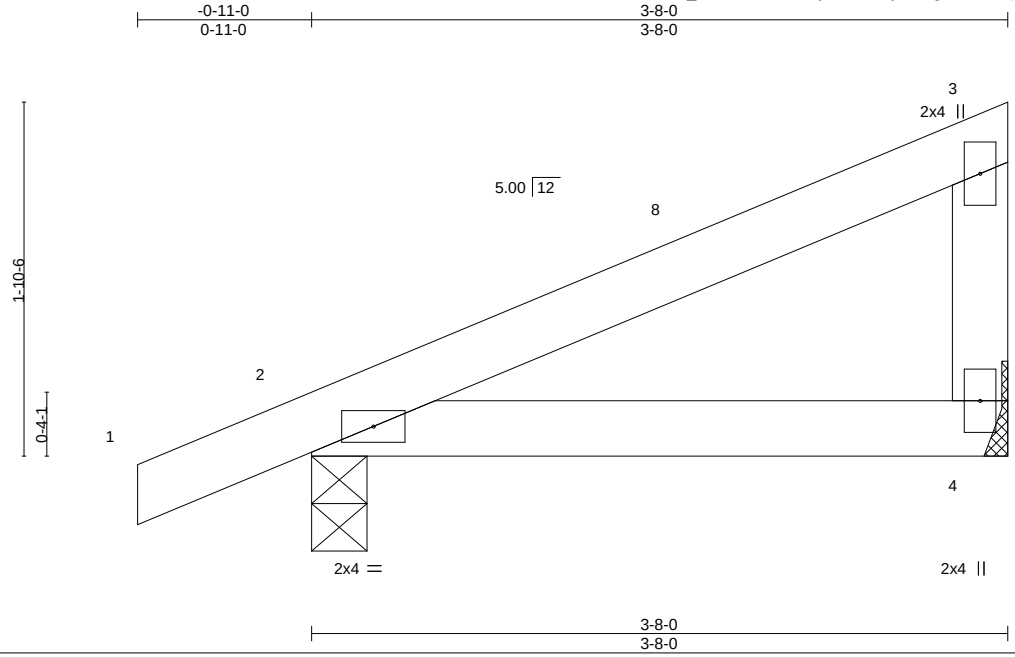

LOADING (psf)		SPACING-	2-0-0	CSI.		DEFL.	in	(loc)	l/defl	L/d	PLATES	GRIP
TCLL (roof)	20.0	Plate Grip DOL	1.15	TC	0.16	Vert(LL)	-0.01	4-7	>999	240	MT20	244/190
Snow (Pf/Pg)	11.6/15.0	Lumber DOL	1.15	BC	0.14	Vert(CT)	-0.02	4-7	>999	180		
TCDL	10.0	Rep Stress Incr	YES	WB	0.00	Horz(CT)	0.00	2	n/a	n/a		
BCLL	0.0 *	Code IRC2018/TPI2014		Matrix-MP							Weight: 15 lb	FT = 20%
BCDL	10.0											

LUMBER-
TOP CHORD 2x4 SP No.2
BOT CHORD 2x4 SP No.2
WEBS 2x4 SP No.3

BRACING-
TOP CHORD Structural wood sheathing directly applied or 3-8-0 oc purlins, except end verticals.
BOT CHORD Rigid ceiling directly applied or 10-0-0 oc bracing.

REACTIONS. (size) 4=Mechanical, 2=0-3-8
Max Horz 2=58(LC 15)
Max Uplift 4=-6(LC 16), 2=-40(LC 16)
Max Grav 4=140(LC 21), 2=215(LC 21)

FORCES. (lb) - Max. Comp./Max. Ten. - All forces 250 (lb) or less except when shown.

NOTES-
1) Wind: ASCE 7-16; Vult=130mph (3-second gust) Vasd=103mph; TCDL=6.0psf; BCDL=6.0psf; h=25ft; B=45ft; L=24ft; eave=4ft; Cat. II; Exp B; Enclosed; MWFRS (directional) and C-C Exterior(2E) -0-11-0 to 2-1-0, Interior(1) 2-1-0 to 3-6-4 zone; cantilever left and right exposed ; end vertical left and right exposed;C-C for members and forces & MWFRS for reactions shown; Lumber DOL=1.60 plate grip DOL=1.60
2) TCLL: ASCE 7-16; Pr=20.0 psf (roof LL: Lum DOL=1.15 Plate DOL=1.15); Pg=15.0 psf; Pf=11.6 psf (Lum DOL=1.15 Plate DOL=1.15); Is=1.0; Rough Cat B; Partially Exp.; Ce=1.0; Cs=1.00; Ct=1.10
3) Unbalanced snow loads have been considered for this design.
4) This truss has been designed for greater of min roof live load of 12.0 psf or 1.00 times flat roof load of 11.6 psf on overhangs non-concurrent with other live loads.
5) This truss has been designed for a 10.0 psf bottom chord live load nonconcurrent with any other live loads.
6) * This truss has been designed for a live load of 20.0psf on the bottom chord in all areas where a rectangle 3-6-0 tall by 2-0-0 wide will fit between the bottom chord and any other members.
7) Refer to girder(s) for truss to truss connections.
8) Provide mechanical connection (by others) of truss to bearing plate capable of withstanding 100 lb uplift at joint(s) 4, 2.
9) This truss is designed in accordance with the 2018 International Residential Code sections R502.11.1 and R802.10.2 and referenced standard ANSI/TPI 1.

March 17,2025

WARNING - Verify design parameters and READ NOTES ON THIS AND INCLUDED MITEK REFERENCE PAGE MII-7473 rev. 1/2/2023 BEFORE USE.
Design valid for use only with MiTek® connectors. This design is based only upon parameters shown, and is for an individual building component, not a truss system. Before use, the building designer must verify the applicability of design parameters and properly incorporate this design into the overall building design. Bracing indicated is to prevent buckling of individual truss web and/or chord members only. Additional temporary and permanent bracing is always required for stability and to prevent collapse with possible personal injury and property damage. For general guidance regarding the fabrication, storage, delivery, erection and bracing of trusses and truss systems, see **ANSI/TPI1 Quality Criteria and DSB-22** available from Truss Plate Institute (www.tpinst.org) and **BCSI Building Component Safety Information** available from the Structural Building Component Association (www.sbcacomponents.com)

ENGINEERING BY TRENCO A MiTek Affiliate
818 Soundside Road
Edenton, NC 27932

Job	Truss	Truss Type	Qty	Ply	FFF-LOT #51 Roof
25-0542-A	M01A	Monopitch	1	1	I72048248 Job Reference (optional)

Riverside Roof Truss, LLC, Danville, Va - 24541, 8.730 s Feb 19 2025 MiTek Industries, Inc. Fri Mar 14 12:13:57 2025 Page 1
ID:BxI2MwYau_NHkbraGCmHIoyOvst-OKyPYXg6fLbUWQJzKfpbiyBqYZZ9fa8DoPNkpYzb0oe

3-8-0
3-8-0

Scale = 1:12.1

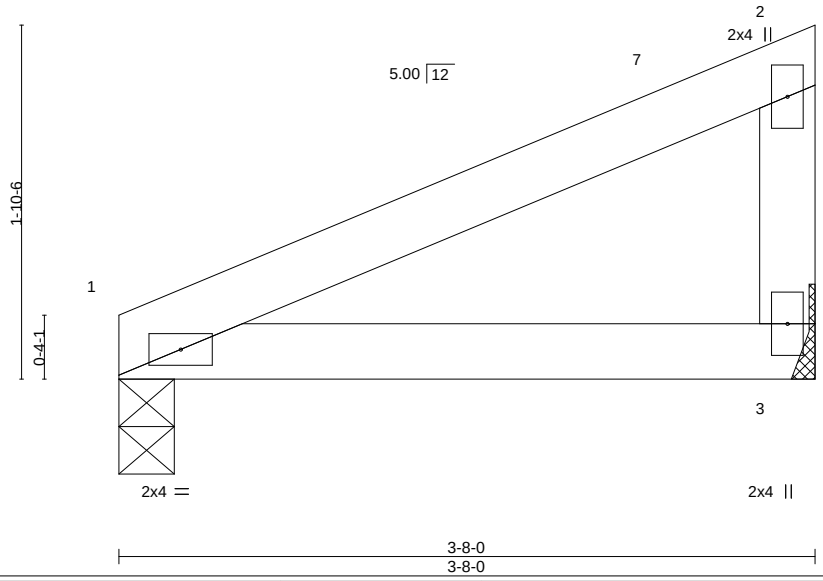

LOADING (psf)		SPACING-	2-0-0	CSI.		DEFL.	in	(loc)	l/defl	L/d	PLATES	GRIP
TCLL (roof)	20.0	Plate Grip DOL	1.15	TC	0.17	Vert(LL)	-0.01	3-6	>999	240	MT20	244/190
Snow (Pf/Pg)	11.6/15.0	Lumber DOL	1.15	BC	0.16	Vert(CT)	-0.02	3-6	>999	180		
TCDL	10.0	Rep Stress Incr	YES	WB	0.00	Horz(CT)	0.00	1	n/a	n/a		
BCLL	0.0 *	Code IRC2018/TPI2014		Matrix-MP							Weight: 13 lb	FT = 20%
BCDL	10.0											

LUMBER-
TOP CHORD 2x4 SP No.2
BOT CHORD 2x4 SP No.2
WEBS 2x4 SP No.3

BRACING-
TOP CHORD Structural wood sheathing directly applied or 3-8-0 oc purlins, except end verticals.
BOT CHORD Rigid ceiling directly applied or 10-0-0 oc bracing.

REACTIONS. (size) 1=0-3-8, 3=Mechanical
Max Horz 1=52(LC 15)
Max Uplift 1=-7(LC 16), 3=-10(LC 16)
Max Grav 1=144(LC 20), 3=144(LC 20)

FORCES. (lb) - Max. Comp./Max. Ten. - All forces 250 (lb) or less except when shown.

NOTES-
1) Wind: ASCE 7-16; Vult=130mph (3-second gust) Vasd=103mph; TCDL=6.0psf; BCDL=6.0psf; h=25ft; B=45ft; L=24ft; eave=4ft; Cat. II; Exp B; Enclosed; MWFRS (directional) and C-C Exterior(2E) 0-0-0 to 3-0-0, Interior(1) 3-0-0 to 3-6-4 zone; cantilever left and right exposed ; end vertical left and right exposed;C-C for members and forces & MWFRS for reactions shown; Lumber DOL=1.60 plate grip DOL=1.60
2) TCLL: ASCE 7-16; Pr=20.0 psf (roof LL: Lum DOL=1.15 Plate DOL=1.15); Pg=15.0 psf; Pf=11.6 psf (Lum DOL=1.15 Plate DOL=1.15); Is=1.0; Rough Cat B; Partially Exp.; Ce=1.0; Cs=1.00; Ct=1.10
3) Unbalanced snow loads have been considered for this design.
4) This truss has been designed for a 10.0 psf bottom chord live load nonconcurrent with any other live loads.
5) * This truss has been designed for a live load of 20.0psf on the bottom chord in all areas where a rectangle 3-6-0 tall by 2-0-0 wide will fit between the bottom chord and any other members.
6) Refer to girder(s) for truss to truss connections.
7) Provide mechanical connection (by others) of truss to bearing plate capable of withstanding 100 lb uplift at joint(s) 1, 3.
8) This truss is designed in accordance with the 2018 International Residential Code sections R502.11.1 and R802.10.2 and referenced standard ANSI/TPI 1.

NORTH CAROLINA PROFESSIONAL SEAL 036322 ENGINEER ERIC A. GILBERT

March 17,2025

WARNING - Verify design parameters and READ NOTES ON THIS AND INCLUDED MITEK REFERENCE PAGE MII-7473 rev. 1/2/2023 BEFORE USE.
Design valid for use only with MiTek® connectors. This design is based only upon parameters shown, and is for an individual building component, not a truss system. Before use, the building designer must verify the applicability of design parameters and properly incorporate this design into the overall building design. Bracing indicated is to prevent buckling of individual truss web and/or chord members only. Additional temporary and permanent bracing is always required for stability and to prevent collapse with possible personal injury and property damage. For general guidance regarding the fabrication, storage, delivery, erection and bracing of trusses and truss systems, see **ANSI/TPI1 Quality Criteria and DSB-22** available from Truss Plate Institute (www.tpinst.org) and **BCSI Building Component Safety Information** available from the Structural Building Component Association (www.sbcacomponents.com)

ENGINEERING BY TRENCO A MiTek Affiliate
818 Soundside Road
Edenton, NC 27932

Job	Truss	Truss Type	Qty	Ply	FFF-LOT #51 Roof
25-0542-A	M01GE	GABLE	1	1	I72048249 Job Reference (optional)

Riverside Roof Truss, LLC, Danville, Va - 24541, 8.730 s Feb 19 2025 MiTek Industries, Inc. Fri Mar 14 12:13:58 2025 Page 1
ID:BxI2MwYau_NHkbraGCmHIoyOvst-sWWnlthkQfjL8auAuNKqEAj0jywKO1TM137IL?zb0od

-0-11-0 3-8-0
0-11-0 3-8-0

Scale = 1:12.1

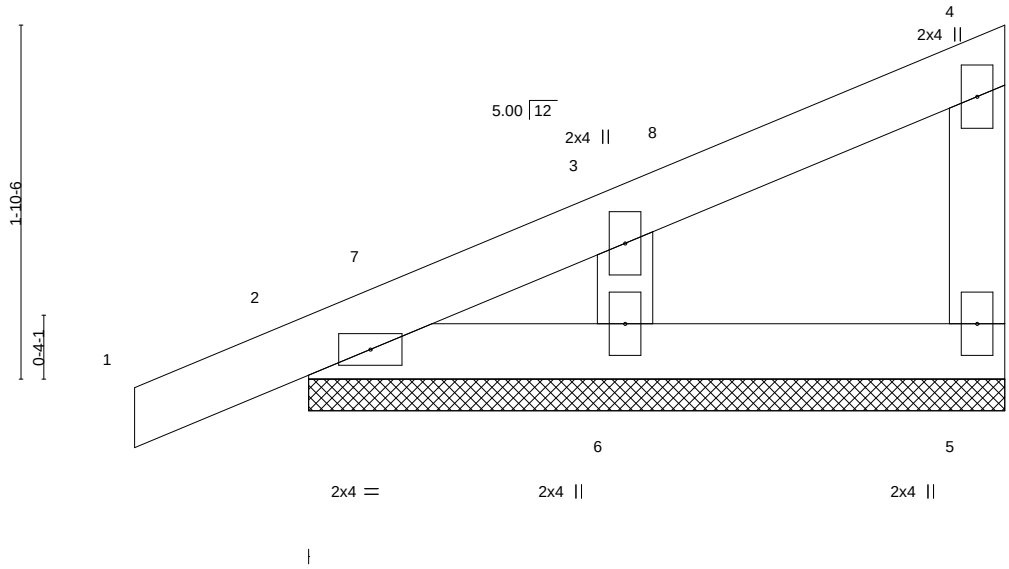

LOADING (psf)		SPACING-	2-0-0	CSI.		DEFL.	in	(loc)	l/defl	L/d	PLATES	GRIP
TCLL (roof)	20.0	Plate Grip DOL	1.15	TC	0.08	Vert(LL)	0.00	1	n/r	120	MT20	244/190
Snow (Pf/Pg)	11.6/15.0	Lumber DOL	1.15	BC	0.03	Vert(CT)	-0.00	1	n/r	120		
TCDL	10.0	Rep Stress Incr	YES	WB	0.06	Horz(CT)	0.00	5	n/a	n/a		
BCLL	0.0 *	Code IRC2018/TPI2014		Matrix-P							Weight: 16 lb	FT = 20%
BCDL	10.0											

LUMBER-

TOP CHORD	2x4 SP No.2
BOT CHORD	2x4 SP No.2
WEBS	2x4 SP No.3
OTHERS	2x4 SP No.3

BRACING-

TOP CHORD	Structural wood sheathing directly applied or 3-8-0 oc purlins, except end verticals.
BOT CHORD	Rigid ceiling directly applied or 10-0-0 oc bracing.

REACTIONS. (size) 5=3-8-0, 2=3-8-0, 6=3-8-0
Max Horz 2=58(LC 15)
Max Uplift 5=-5(LC 13), 2=-36(LC 16), 6=-8(LC 16)
Max Grav 5=64(LC 21), 2=129(LC 21), 6=162(LC 21)

FORCES. (lb) - Max. Comp./Max. Ten. - All forces 250 (lb) or less except when shown.

NOTES-

1) Wind: ASCE 7-16; Vult=130mph (3-second gust) Vasd=103mph; TCDL=6.0psf; BCDL=6.0psf; h=25ft; B=45ft; L=24ft; eave=2ft; Cat. II; Exp B; Enclosed; MWFRS (directional) and C-C Corner(3E) -0-11-0 to 2-1-0, Exterior(2N) 2-1-0 to 3-6-4 zone; cantilever left and right exposed ; end vertical left and right exposed;C-C for members and forces & MWFRS for reactions shown; Lumber DOL=1.60 plate grip DOL=1.60
2) Truss designed for wind loads in the plane of the truss only. For studs exposed to wind (normal to the face), see Standard Industry Gable End Details as applicable, or consult qualified building designer as per ANSI/TPI 1.
3) TCLL: ASCE 7-16; Pr=20.0 psf (roof LL: Lum DOL=1.15 Plate DOL=1.15); Pg=15.0 psf; Pf=11.6 psf (Lum DOL=1.15 Plate DOL=1.15); Is=1.0; Rough Cat B; Partially Exp.; Ce=1.0; Cs=1.00; Ct=1.10
4) Unbalanced snow loads have been considered for this design.
5) This truss has been designed for greater of min roof live load of 12.0 psf or 1.00 times flat roof load of 11.6 psf on overhangs non-concurrent with other live loads.
6) Gable requires continuous bottom chord bearing.
7) Gable studs spaced at 2-0-0 oc.
8) This truss has been designed for a 10.0 psf bottom chord live load nonconcurrent with any other live loads.
9) * This truss has been designed for a live load of 20.0psf on the bottom chord in all areas where a rectangle 3-6-0 tall by 2-0-0 wide will fit between the bottom chord and any other members.
10) Provide mechanical connection (by others) of truss to bearing plate capable of withstanding 100 lb uplift at joint(s) 5, 2, 6.
11) This truss is designed in accordance with the 2018 International Residential Code sections R502.11.1 and R802.10.2 and referenced standard ANSI/TPI 1.

March 17,2025

WARNING - Verify design parameters and READ NOTES ON THIS AND INCLUDED MITEK REFERENCE PAGE MII-7473 rev. 1/2/2023 BEFORE USE.
Design valid for use only with MiTek® connectors. This design is based only upon parameters shown, and is for an individual building component, not a truss system. Before use, the building designer must verify the applicability of design parameters and properly incorporate this design into the overall building design. Bracing indicated is to prevent buckling of individual truss web and/or chord members only. Additional temporary and permanent bracing is always required for stability and to prevent collapse with possible personal injury and property damage. For general guidance regarding the fabrication, storage, delivery, erection and bracing of trusses and truss systems, see **ANSI/TPI1 Quality Criteria and DSB-22** available from Truss Plate Institute (www.tpinst.org) and **BCSI Building Component Safety Information** available from the Structural Building Component Association (www.sbcacomponents.com)

ENGINEERING BY TRENCO A MiTek Affiliate
818 Soundside Road
Edenton, NC 27932

Job	Truss	Truss Type	Qty	Ply	FFF-LOT #51 Roof
25-0542-A	T01GE	COMMON SUPPORTED GAB	1	1	I72048250 Job Reference (optional)

Riverside Roof Truss, LLC, Danville, Va - 24541, 8.730 s Feb 19 2025 MiTek Industries, Inc. Fri Mar 14 12:13:58 2025 Page 1
ID:BxI2MwYau_NHkbraGCmHIoyOvst-sWWnlthkQfjL8auAuNKqEAj1_yw7O1rM137IL?zb0od

-0-11-0 | 6-6-0 | 13-0-0 | 13-11-0
0-11-0 | 6-6-0 | 6-6-0 | 0-11-0

Scale: 1/2"=1'

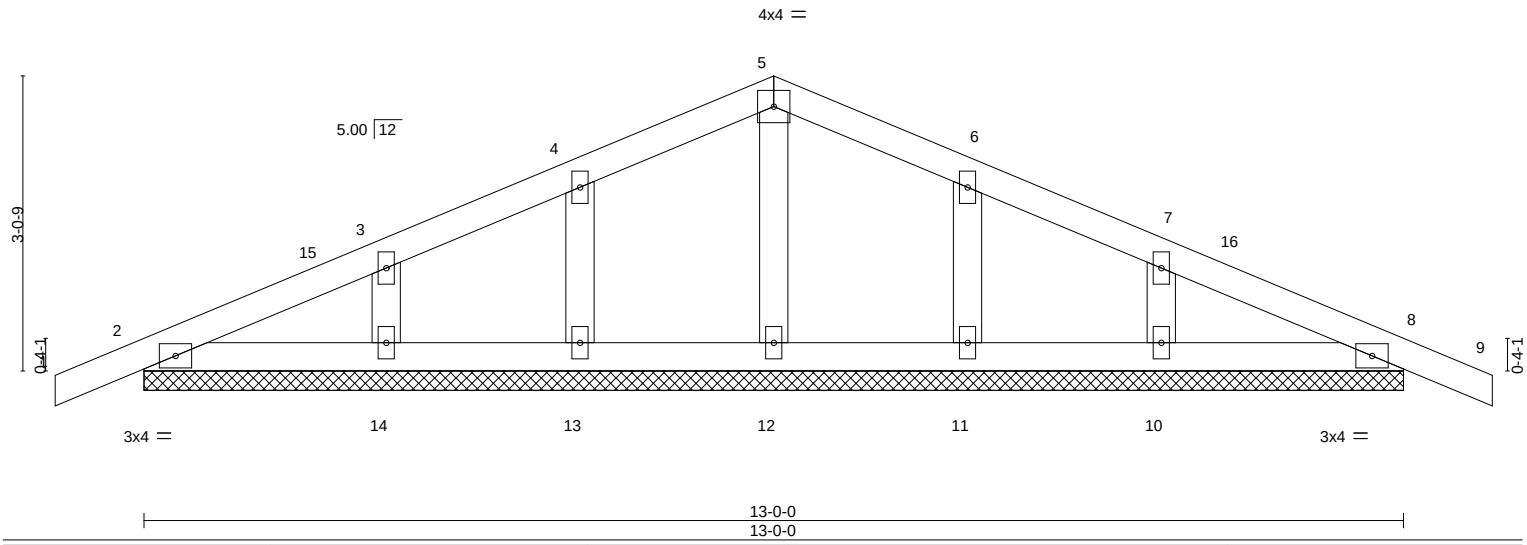

LOADING (psf)		SPACING-	2-0-0	CSI.		DEFL.	in	(loc)	l/defl	L/d	PLATES	GRIP
TCLL (roof)	20.0	Plate Grip DOL	1.15	TC	0.06	Vert(LL)	-0.00	8	n/r	120	MT20	244/190
Snow (Pf/Pg)	11.6/15.0	Lumber DOL	1.15	BC	0.04	Vert(CT)	0.00	8	n/r	120		
TCDL	10.0	Rep Stress Incr	YES	WB	0.04	Horz(CT)	0.00	8	n/a	n/a		
BCLL	0.0 *	Code IRC2018/TPI2014		Matrix-S							Weight: 55 lb	FT = 20%
BCDL	10.0											

LUMBER-
TOP CHORD 2x4 SP No.2
BOT CHORD 2x4 SP No.2
OTHERS 2x4 SP No.3

BRACING-
TOP CHORD Structural wood sheathing directly applied or 6-0-0 oc purlins.
BOT CHORD Rigid ceiling directly applied or 10-0-0 oc bracing.

REACTIONS. All bearings 13-0-0.
(lb) - Max Horz 2=40(LC 15)
Max Uplift All uplift 100 lb or less at joint(s) 2, 8, 13, 14, 11, 10
Max Grav All reactions 250 lb or less at joint(s) 2, 8, 12, 13, 14, 11, 10

FORCES. (lb) - Max. Comp./Max. Ten. - All forces 250 (lb) or less except when shown.

NOTES-
1) Unbalanced roof live loads have been considered for this design.
2) Wind: ASCE 7-16; Vult=130mph (3-second gust) Vasd=103mph; TCDL=6.0psf; BCDL=6.0psf; h=25ft; B=45ft; L=24ft; eave=2ft; Cat. II; Exp B; Enclosed; MWFRS (directional) and C-C Corner(3E) -0-11-0 to 2-1-0, Exterior(2N) 2-1-0 to 6-6-0, Corner(3R) 6-6-0 to 9-6-0, Exterior(2N) 9-6-0 to 13-11-0 zone; cantilever left and right exposed ; end vertical left and right exposed;C-C for members and forces & MWFRS for reactions shown; Lumber DOL=1.60 plate grip DOL=1.60
3) Truss designed for wind loads in the plane of the truss only. For studs exposed to wind (normal to the face), see Standard Industry Gable End Details as applicable, or consult qualified building designer as per ANSI/TPI 1.
4) TCLL: ASCE 7-16; Pr=20.0 psf (roof LL: Lum DOL=1.15 Plate DOL=1.15); Pg=15.0 psf; Pf=11.6 psf (Lum DOL=1.15 Plate DOL=1.15); Is=1.0; Rough Cat B; Partially Exp.; Ce=1.0; Cs=1.00; Ct=1.10
5) Unbalanced snow loads have been considered for this design.
6) This truss has been designed for greater of min roof live load of 12.0 psf or 1.00 times flat roof load of 11.6 psf on overhangs non-concurrent with other live loads.
7) All plates are 2x4 MT20 unless otherwise indicated.
8) Gable requires continuous bottom chord bearing.
9) Gable studs spaced at 2-0-0 oc.
10) This truss has been designed for a 10.0 psf bottom chord live load nonconcurrent with any other live loads.
11) * This truss has been designed for a live load of 20.0psf on the bottom chord in all areas where a rectangle 3-6-0 tall by 2-0-0 wide will fit between the bottom chord and any other members.
12) Provide mechanical connection (by others) of truss to bearing plate capable of withstanding 100 lb uplift at joint(s) 2, 8, 13, 14, 11, 10.
13) This truss is designed in accordance with the 2018 International Residential Code sections R502.11.1 and R802.10.2 and referenced standard ANSI/TPI 1.

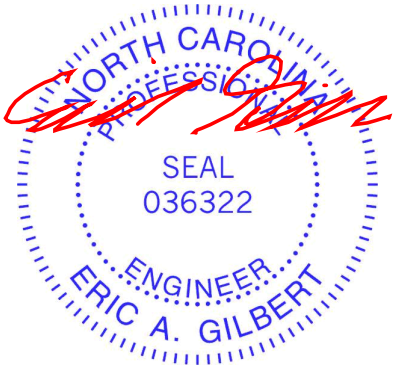

March 17,2025

WARNING - Verify design parameters and READ NOTES ON THIS AND INCLUDED MITEK REFERENCE PAGE MII-7473 rev. 1/2/2023 BEFORE USE.
Design valid for use only with MiTek® connectors. This design is based only upon parameters shown, and is for an individual building component, not a truss system. Before use, the building designer must verify the applicability of design parameters and properly incorporate this design into the overall building design. Bracing indicated is to prevent buckling of individual truss web and/or chord members only. Additional temporary and permanent bracing is always required for stability and to prevent collapse with possible personal injury and property damage. For general guidance regarding the fabrication, storage, delivery, erection and bracing of trusses and truss systems, see **ANSI/TPI1 Quality Criteria and DSB-22** available from Truss Plate Institute (www.tpinst.org) and **BCSI Building Component Safety Information** available from the Structural Building Component Association (www.sbcacomponents.com)

ENGINEERING BY TRENCO A MiTek Affiliate
818 Soundside Road
Edenton, NC 27932

Job	Truss	Truss Type	Qty	Ply	FFF-LOT #51 Roof
25-0542-A	T02	COMMON	1	1	I72048251
					Job Reference (optional)

Riverside Roof Truss, LLC, Danville, Va - 24541, 8.730 s Feb 19 2025 MiTek Industries, Inc. Fri Mar 14 12:13:59 2025 Page 1
ID:BxI2MwYau_NHkbraGCmHIoyOvst-Ki3AzDiNBzrCmkTMS4s3nNG7TMAp7PkWFjsrtRzb0oc

-0-11-0	4-7-12	9-3-8	13-11-4	18-7-0	19-6-0
0-11-0	4-7-12	4-7-12	4-7-12	4-7-12	0-11-0

Scale = 1:32.7

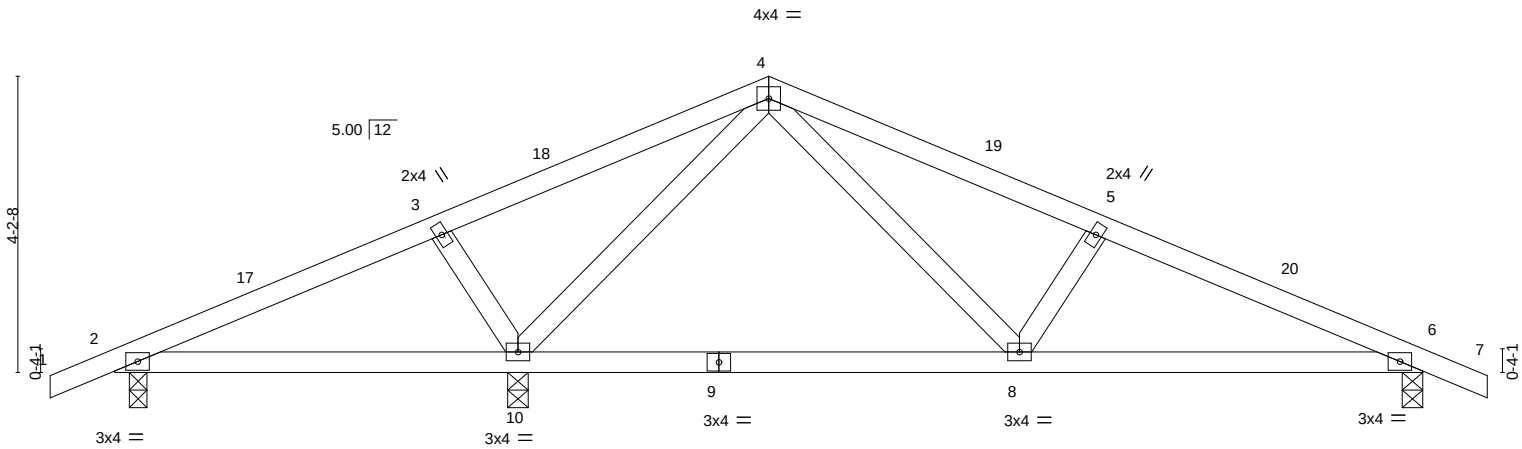

0-2-8	5-8-12	12-10-4	18-3-0	18-7-0
0-2-8	5-6-4	7-1-8	5-4-12	0-4-0

LOADING (psf)		**SPACING-**	2-0-0	**CSI.**		**DEFL.**	in	(loc)	l/defl	L/d	**PLATES**	**GRIP**
TCLL (roof)	20.0	Plate Grip DOL	1.15	TC	0.34	Vert(LL)	-0.05	8-10	>999	240	MT20	244/190
Snow (Pf/Pg)	11.6/15.0	Lumber DOL	1.15	BC	0.40	Vert(CT)	-0.09	8-10	>999	180		
TCDL	10.0	Rep Stress Incr	YES	WB	0.38	Horz(CT)	0.01	6	n/a	n/a		
BCLL	0.0 *	Code IRC2018/TPI2014		Matrix-MS							Weight: 82 lb	FT = 20%
BCDL	10.0											

LUMBER-
TOP CHORD 2x4 SP No.2
BOT CHORD 2x4 SP No.2
WEBS 2x4 SP No.3

BRACING-
TOP CHORD Structural wood sheathing directly applied or 6-0-0 oc purlins.
BOT CHORD Rigid ceiling directly applied or 6-0-0 oc bracing.

REACTIONS. (size) 10=0-3-8, 6=0-3-8, 2=0-3-0
Max Horz 2=55(LC 15)
Max Uplift 10=-45(LC 16), 6=-60(LC 16), 2=-43(LC 16)
Max Grav 10=895(LC 2), 6=522(LC 2), 2=213(LC 34)

FORCES. (lb) - Max. Comp./Max. Ten. - All forces 250 (lb) or less except when shown.
TOP CHORD 3-4=0/286, 4-5=-683/166, 5-6=-806/166
BOT CHORD 6-8=-98/723
WEBS 4-8=-65/529, 5-8=-293/148, 4-10=-660/142, 3-10=-303/150

NOTES-
1) Unbalanced roof live loads have been considered for this design.
2) Wind: ASCE 7-16; Vult=130mph (3-second gust) Vasd=103mph; TCDL=6.0psf; BCDL=6.0psf; h=25ft; B=45ft; L=24ft; eave=4ft; Cat. II; Exp B; Enclosed; MWFRS (directional) and C-C Exterior(2E) -0-11-0 to 2-1-0, Interior(1) 2-1-0 to 9-3-8, Exterior(2R) 9-3-8 to 12-3-8, Interior(1) 12-3-8 to 19-6-0 zone; cantilever left and right exposed ; end vertical left and right exposed;C-C for members and forces & MWFRS for reactions shown; Lumber DOL=1.60 plate grip DOL=1.60
3) TCLL: ASCE 7-16; Pr=20.0 psf (roof LL: Lum DOL=1.15 Plate DOL=1.15); Pg=15.0 psf; Pf=11.6 psf (Lum DOL=1.15 Plate DOL=1.15); Is=1.0; Rough Cat B; Partially Exp.; Ce=1.0; Cs=1.00; Ct=1.10
4) Unbalanced snow loads have been considered for this design.
5) This truss has been designed for greater of min roof live load of 12.0 psf or 1.00 times flat roof load of 11.6 psf on overhangs non-concurrent with other live loads.
6) This truss has been designed for a 10.0 psf bottom chord live load nonconcurrent with any other live loads.
7) * This truss has been designed for a live load of 20.0psf on the bottom chord in all areas where a rectangle 3-6-0 tall by 2-0-0 wide will fit between the bottom chord and any other members.
8) Provide mechanical connection (by others) of truss to bearing plate capable of withstanding 100 lb uplift at joint(s) 10, 6, 2.
9) This truss is designed in accordance with the 2018 International Residential Code sections R502.11.1 and R802.10.2 and referenced standard ANSI/TPI 1.

March 17,2025

WARNING - Verify design parameters and READ NOTES ON THIS AND INCLUDED MITEK REFERENCE PAGE MII-7473 rev. 1/2/2023 BEFORE USE.
Design valid for use only with MiTek® connectors. This design is based only upon parameters shown, and is for an individual building component, not a truss system. Before use, the building designer must verify the applicability of design parameters and properly incorporate this design into the overall building design. Bracing indicated is to prevent buckling of individual truss web and/or chord members only. Additional temporary and permanent bracing is always required for stability and to prevent collapse with possible personal injury and property damage. For general guidance regarding the fabrication, storage, delivery, erection and bracing of trusses and truss systems, see **ANSI/TPI1 Quality Criteria and DSB-22** available from Truss Plate Institute (www.tpinst.org) and **BCSI Building Component Safety Information** available from the Structural Building Component Association (www.sbcacomponents.com)

ENGINEERING BY TRENCO A MiTek Affiliate
818 Soundside Road
Edenton, NC 27932

Job	Truss	Truss Type	Qty	Ply	FFF-LOT #51 Roof
25-0542-A	T02A	COMMON	2	1	I72048252 Job Reference (optional)

Riverside Roof Truss, LLC, Danville, Va - 24541, 8.730 s Feb 19 2025 MiTek Industries, Inc. Fri Mar 14 12:14:00 2025 Page 1
ID:BxI2MwYau_NHkbraGCmHloyOvst-pvdYAZj?yGz3Nu2Y?oNIKbpJemWyssYfUNcOPtzb0ob

4-6-0	9-0-0	13-7-12	18-3-8	19-2-8
4-6-0	4-6-0	4-7-12	4-7-12	0-11-0

Scale = 1:31.6

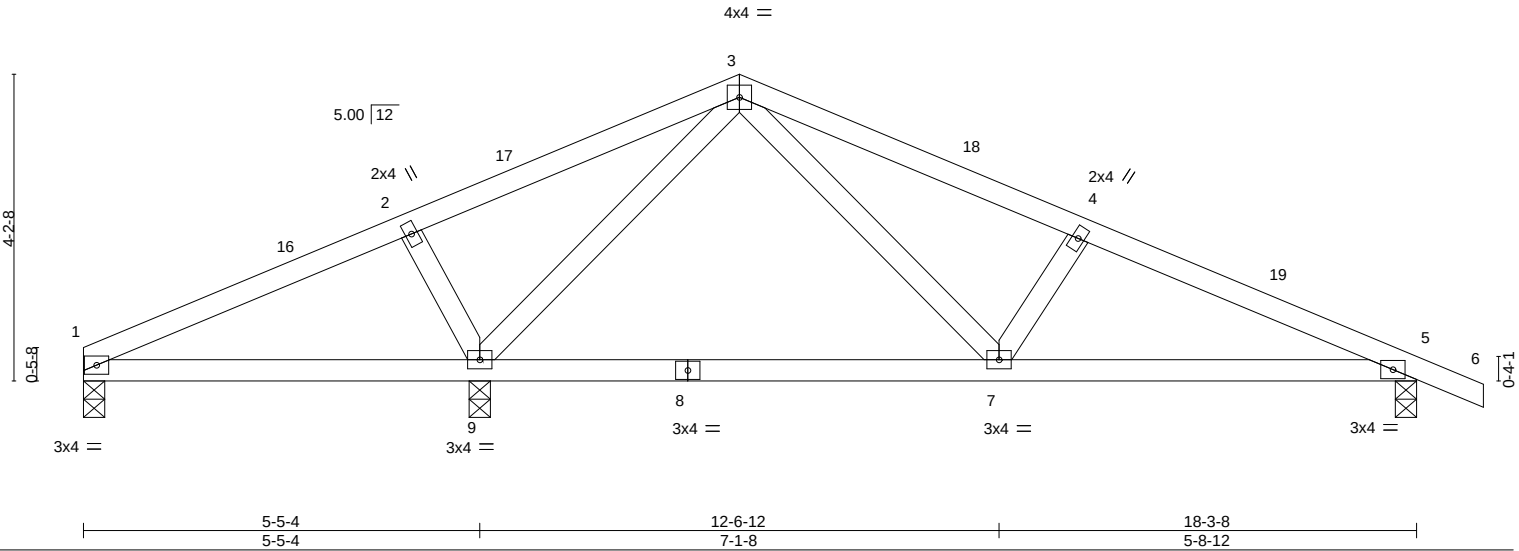

LOADING (psf)		SPACING-	2-0-0	CSI.		DEFL.	in	(loc)	l/defl	L/d	PLATES	GRIP
TCLL (roof)	20.0	Plate Grip DOL	1.15	TC	0.31	Vert(LL)	-0.05	7-9	>999	240	MT20	244/190
Snow (Pf/Pg)	11.6/15.0	Lumber DOL	1.15	BC	0.41	Vert(CT)	-0.10	7-9	>999	180		
TCDL	10.0	Rep Stress Incr	YES	WB	0.34	Horz(CT)	0.01	5	n/a	n/a		
BCLL	0.0 *	Code IRC2018/TPI2014		Matrix-MS							Weight: 79 lb	FT = 20%
BCDL	10.0											

LUMBER-
TOP CHORD 2x4 SP No.2
BOT CHORD 2x4 SP No.2
WEBS 2x4 SP No.3

BRACING-
TOP CHORD Structural wood sheathing directly applied or 6-0-0 oc purlins.
BOT CHORD Rigid ceiling directly applied or 6-0-0 oc bracing.

REACTIONS. (size) 1=0-3-8, 9=0-3-8, 5=0-3-8
Max Horz 1=-55(LC 14)
Max Uplift 1=-13(LC 16), 9=-43(LC 16), 5=-61(LC 16)
Max Grav 1=165(LC 34), 9=852(LC 2), 5=535(LC 2)

FORCES. (lb) - Max. Comp./Max. Ten. - All forces 250 (lb) or less except when shown.
TOP CHORD 3-4=-714/177, 4-5=-837/177
BOT CHORD 7-9=0/254, 5-7=-108/752
WEBS 2-9=-294/150, 3-9=-597/122, 3-7=-67/529, 4-7=-293/150

NOTES-
1) Unbalanced roof live loads have been considered for this design.
2) Wind: ASCE 7-16; Vult=130mph (3-second gust) Vasd=103mph; TCDL=6.0psf; BCDL=6.0psf; h=25ft; B=45ft; L=24ft; eave=4ft; Cat. II; Exp B; Enclosed; MWFRS (directional) and C-C Exterior(2E) 0-0-0 to 3-0-0, Interior(1) 3-0-0 to 9-0-0, Exterior(2R) 9-0-0 to 12-0-0, Interior(1) 12-0-0 to 19-2-8 zone; cantilever left and right exposed ; end vertical left and right exposed;C-C for members and forces & MWFRS for reactions shown; Lumber DOL=1.60 plate grip DOL=1.60
3) TCLL: ASCE 7-16; Pr=20.0 psf (roof LL: Lum DOL=1.15 Plate DOL=1.15); Pg=15.0 psf; Pf=11.6 psf (Lum DOL=1.15 Plate DOL=1.15); Is=1.0; Rough Cat B; Partially Exp.; Ce=1.0; Cs=1.00; Ct=1.10
4) Unbalanced snow loads have been considered for this design.
5) This truss has been designed for greater of min roof live load of 12.0 psf or 1.00 times flat roof load of 11.6 psf on overhangs non-concurrent with other live loads.
6) This truss has been designed for a 10.0 psf bottom chord live load nonconcurrent with any other live loads.
7) * This truss has been designed for a live load of 20.0psf on the bottom chord in all areas where a rectangle 3-6-0 tall by 2-0-0 wide will fit between the bottom chord and any other members.
8) Provide mechanical connection (by others) of truss to bearing plate capable of withstanding 100 lb uplift at joint(s) 1, 9, 5.
9) This truss is designed in accordance with the 2018 International Residential Code sections R502.11.1 and R802.10.2 and referenced standard ANSI/TPI 1.

March 17,2025

WARNING - Verify design parameters and READ NOTES ON THIS AND INCLUDED MITEK REFERENCE PAGE MII-7473 rev. 1/2/2023 BEFORE USE.
Design valid for use only with MiTek® connectors. This design is based only upon parameters shown, and is for an individual building component, not a truss system. Before use, the building designer must verify the applicability of design parameters and properly incorporate this design into the overall building design. Bracing indicated is to prevent buckling of individual truss web and/or chord members only. Additional temporary and permanent bracing is always required for stability and to prevent collapse with possible personal injury and property damage. For general guidance regarding the fabrication, storage, delivery, erection and bracing of trusses and truss systems, see **ANSI/TPI1 Quality Criteria and DSB-22** available from Truss Plate Institute (www.tpinst.org) and **BCSI Building Component Safety Information** available from the Structural Building Component Association (www.sbcacomponents.com)

ENGINEERING BY TRENCO A MiTek Affiliate
818 Soundside Road
Edenton, NC 27932

Job	Truss	Truss Type	Qty	Ply	FFF-LOT #51 Roof
25-0542-A	T02B	COMMON	2	1	I72048253 Job Reference (optional)

Riverside Roof Truss, LLC, Danville, Va - 24541, 8.730 s Feb 19 2025 MiTek Industries, Inc. Fri Mar 14 12:14:00 2025 Page 1
ID:BxI2MwYau_NHkbraGCmHIoyOvst-pvdYAZj?yGz3Nu2Y?oNIKbpJ8mWcsuOfUNcOPtzb0ob

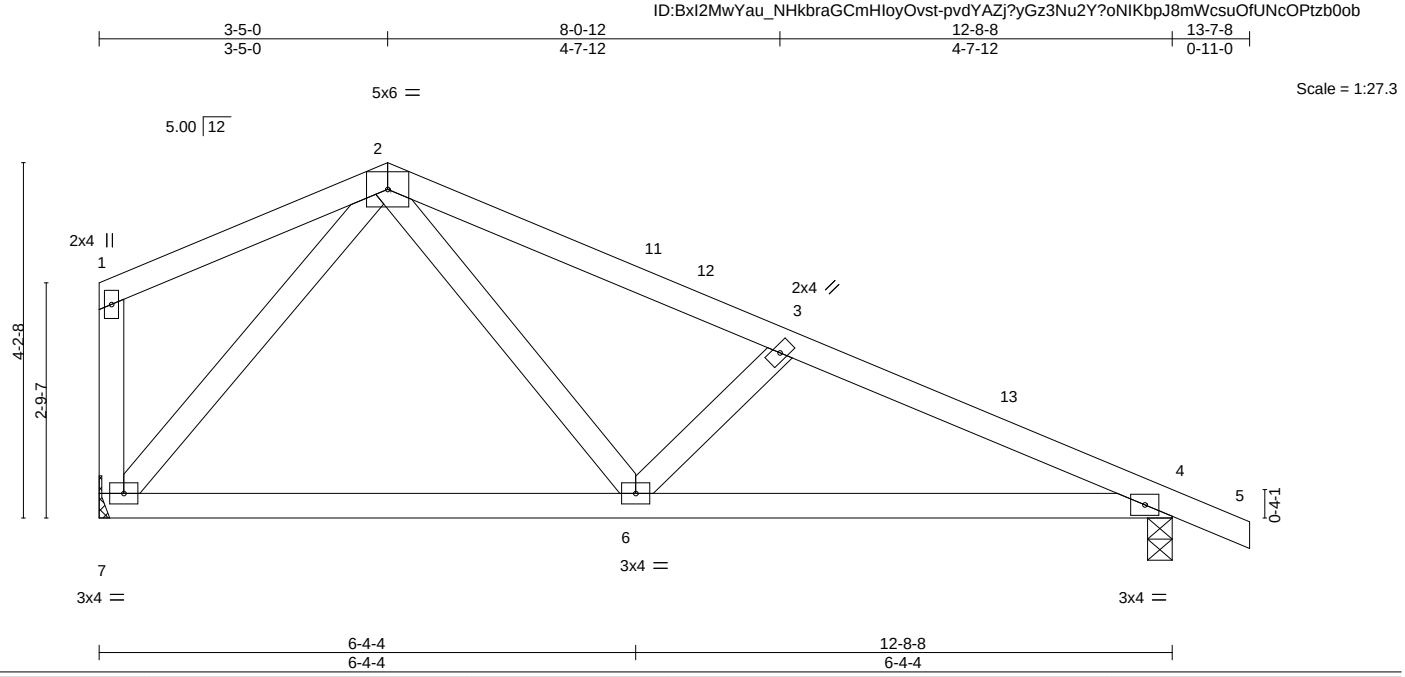

LOADING (psf)		SPACING-	2-0-0	CSI.		DEFL.	in	(loc)	l/defl	L/d	PLATES	GRIP
TCLL (roof)	20.0	Plate Grip DOL	1.15	TC	0.28	Vert(LL)	-0.04	6-7	>999	240	MT20	244/190
Snow (Pf/Pg)	11.6/15.0	Lumber DOL	1.15	BC	0.43	Vert(CT)	-0.08	6-7	>999	180		
TCDL	10.0	Rep Stress Incr	YES	WB	0.22	Horz(CT)	0.01	4	n/a	n/a		
BCLL	0.0 *	Code IRC2018/TPI2014		Matrix-MS							Weight: 62 lb	FT = 20%
BCDL	10.0											

LUMBER-
TOP CHORD 2x4 SP No.2
BOT CHORD 2x4 SP No.2
WEBS 2x4 SP No.3

BRACING-
TOP CHORD Structural wood sheathing directly applied or 5-11-14 oc purlins, except end verticals.
BOT CHORD Rigid ceiling directly applied or 10-0-0 oc bracing.

REACTIONS. (size) 4=0-3-8, 7=Mechanical
Max Horz 7=-112(LC 14)
Max Uplift 4=-59(LC 16), 7=-31(LC 16)
Max Grav 4=560(LC 2), 7=500(LC 2)

FORCES. (lb) - Max. Comp./Max. Ten. - All forces 250 (lb) or less except when shown.
TOP CHORD 2-3=-700/213, 3-4=-891/254
BOT CHORD 6-7=0/312, 4-6=-155/803
WEBS 2-6=-76/467, 3-6=-315/196, 2-7=-455/202

NOTES-
1) Unbalanced roof live loads have been considered for this design.
2) Wind: ASCE 7-16; Vult=130mph (3-second gust) Vasd=103mph; TCDL=6.0psf; BCDL=6.0psf; h=25ft; B=45ft; L=24ft; eave=4ft; Cat. II; Exp B; Enclosed; MWFRS (directional) and C-C Exterior(2E) 0-1-12 to 3-5-0, Exterior(2R) 3-5-0 to 6-5-0, Interior(1) 6-5-0 to 13-7-8 zone; cantilever left and right exposed ; end vertical left and right exposed;C-C for members and forces & MWFRS for reactions shown; Lumber DOL=1.60 plate grip DOL=1.60
3) TCLL: ASCE 7-16; Pr=20.0 psf (roof LL: Lum DOL=1.15 Plate DOL=1.15); Pg=15.0 psf; Pf=11.6 psf (Lum DOL=1.15 Plate DOL=1.15); Is=1.0; Rough Cat B; Partially Exp.; Ce=1.0; Cs=1.00; Ct=1.10
4) Unbalanced snow loads have been considered for this design.
5) This truss has been designed for greater of min roof live load of 12.0 psf or 1.00 times flat roof load of 11.6 psf on overhangs non-concurrent with other live loads.
6) This truss has been designed for a 10.0 psf bottom chord live load nonconcurrent with any other live loads.
7) * This truss has been designed for a live load of 20.0psf on the bottom chord in all areas where a rectangle 3-6-0 tall by 2-0-0 wide will fit between the bottom chord and any other members.
8) Refer to girder(s) for truss to truss connections.
9) Provide mechanical connection (by others) of truss to bearing plate capable of withstanding 100 lb uplift at joint(s) 4, 7.
10) This truss is designed in accordance with the 2018 International Residential Code sections R502.11.1 and R802.10.2 and referenced standard ANSI/TPI 1.

March 17,2025

WARNING - Verify design parameters and READ NOTES ON THIS AND INCLUDED MITEK REFERENCE PAGE MII-7473 rev. 1/2/2023 BEFORE USE.
Design valid for use only with MiTek® connectors. This design is based only upon parameters shown, and is for an individual building component, not a truss system. Before use, the building designer must verify the applicability of design parameters and properly incorporate this design into the overall building design. Bracing indicated is to prevent buckling of individual truss web and/or chord members only. Additional temporary and permanent bracing is always required for stability and to prevent collapse with possible personal injury and property damage. For general guidance regarding the fabrication, storage, delivery, erection and bracing of trusses and truss systems, see **ANSI/TPI1 Quality Criteria and DSB-22** available from Truss Plate Institute (www.tpinst.org) and **BCSI Building Component Safety Information** available from the Structural Building Component Association (www.sbcacomponents.com)

ENGINEERING BY TRENCO A MiTek Affiliate
818 Soundside Road
Edenton, NC 27932

Job	Truss	Truss Type	Qty	Ply	FFF-LOT #51 Roof
25-0542-A	T02SGE	COMMON STRUCTURAL GA	1	1	I72048254 Job Reference (optional)

Riverside Roof Truss, LLC, Danville, Va - 24541, 8.730 s Feb 19 2025 MiTek Industries, Inc. Fri Mar 14 12:14:01 2025 Page 1

ID:BxI2MwYau_NHkbraGCmHIoyOvst-H5BwOvjdja5w?2dlZVuXsoLTyAsHbJEoj1LyyKzb0oa

-0-11-0	4-7-12	9-3-8	13-11-4	18-7-0	19-6-0
0-11-0	4-7-12	4-7-12	4-7-12	4-7-12	0-11-0

Scale = 1:32.7

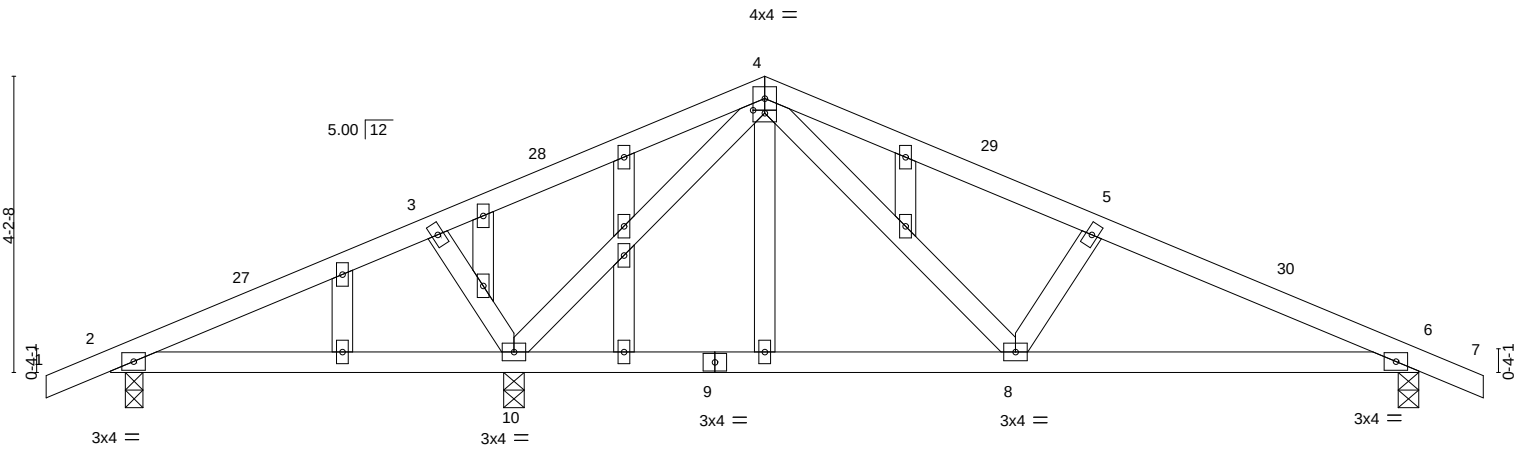

0-2-8	5-8-12	12-10-4	18-3-0	18-7-0
0-2-8	5-6-4	7-1-8	5-4-12	0-4-0

Plate Offsets (X,Y)-- [4:0-2-0,0-0-8]

LOADING (psf)		**SPACING-** 2-0-0	**CSI.**		**DEFL.** in (loc) l/defl L/d	**PLATES**	**GRIP**
TCLL (roof)	20.0	Plate Grip DOL 1.15	TC	0.34	Vert(LL) -0.05 8-10 >999 240	MT20	244/190
Snow (Pf/Pg)	11.6/15.0	Lumber DOL 1.15	BC	0.40	Vert(CT) -0.09 8-10 >999 180		
TCDL	10.0	Rep Stress Incr YES	WB	0.38	Horz(CT) 0.01 6 n/a n/a		
BCLL	0.0 *	Code IRC2018/TPI2014	Matrix-MS			Weight: 96 lb	FT = 20%
BCDL	10.0						

LUMBER-

TOP CHORD	2x4 SP No.2
BOT CHORD	2x4 SP No.2
WEBS	2x4 SP No.3
OTHERS	2x4 SP No.3

BRACING-

TOP CHORD	Structural wood sheathing directly applied or 6-0-0 oc purlins.
BOT CHORD	Rigid ceiling directly applied or 6-0-0 oc bracing.

REACTIONS. (size) 10=0-3-8, 6=0-3-8, 2=0-3-0
Max Horz 2=-55(LC 14)
Max Uplift 10=-45(LC 16), 6=-60(LC 16), 2=-43(LC 16)
Max Grav 10=895(LC 2), 6=522(LC 2), 2=213(LC 34)

FORCES. (lb) - Max. Comp./Max. Ten. - All forces 250 (lb) or less except when shown.

TOP CHORD	3-4=0/286, 4-5=-683/166, 5-6=-806/166
BOT CHORD	6-8=-98/723
WEBS	4-8=-65/529, 5-8=-293/148, 4-10=-660/142, 3-10=-303/150

NOTES-

1) Unbalanced roof live loads have been considered for this design.
2) Wind: ASCE 7-16; Vult=130mph (3-second gust) Vasd=103mph; TCDL=6.0psf; BCDL=6.0psf; h=25ft; B=45ft; L=24ft; eave=4ft; Cat. II; Exp B; Enclosed; MWFRS (directional) and C-C Exterior(2E) -0-11-0 to 2-1-0, Interior(1) 2-1-0 to 9-3-8, Exterior(2R) 9-3-8 to 12-3-8, Interior(1) 12-3-8 to 19-6-0 zone; cantilever left and right exposed ; end vertical left and right exposed;C-C for members and forces & MWFRS for reactions shown; Lumber DOL=1.60 plate grip DOL=1.60
3) Truss designed for wind loads in the plane of the truss only. For studs exposed to wind (normal to the face), see Standard Industry Gable End Details as applicable, or consult qualified building designer as per ANSI/TPI 1.
4) TCLL: ASCE 7-16; Pr=20.0 psf (roof LL: Lum DOL=1.15 Plate DOL=1.15); Pg=15.0 psf; Pf=11.6 psf (Lum DOL=1.15 Plate DOL=1.15); Is=1.0; Rough Cat B; Partially Exp.; Ce=1.0; Cs=1.00; Ct=1.10
5) Unbalanced snow loads have been considered for this design.
6) This truss has been designed for greater of min roof live load of 12.0 psf or 1.00 times flat roof load of 11.6 psf on overhangs non-concurrent with other live loads.
7) All plates are 2x4 MT20 unless otherwise indicated.
8) Gable studs spaced at 2-0-0 oc.
9) This truss has been designed for a 10.0 psf bottom chord live load nonconcurrent with any other live loads.
10) * This truss has been designed for a live load of 20.0psf on the bottom chord in all areas where a rectangle 3-6-0 tall by 2-0-0 wide will fit between the bottom chord and any other members.
11) Provide mechanical connection (by others) of truss to bearing plate capable of withstanding 100 lb uplift at joint(s) 10, 6, 2.
12) This truss is designed in accordance with the 2018 International Residential Code sections R502.11.1 and R802.10.2 and referenced standard ANSI/TPI 1.

NORTH CAROLINA PROFESSIONAL SEAL 036322 ENGINEER ERIC A. GILBERT

March 17,2025

WARNING - Verify design parameters and READ NOTES ON THIS AND INCLUDED MITEK REFERENCE PAGE MII-7473 rev. 1/2/2023 BEFORE USE.
Design valid for use only with MiTek® connectors. This design is based only upon parameters shown, and is for an individual building component, not a truss system. Before use, the building designer must verify the applicability of design parameters and properly incorporate this design into the overall building design. Bracing indicated is to prevent buckling of individual truss web and/or chord members only. Additional temporary and permanent bracing is always required for stability and to prevent collapse with possible personal injury and property damage. For general guidance regarding the fabrication, storage, delivery, erection and bracing of trusses and truss systems, see **ANSI/TPI1 Quality Criteria and DSB-22** available from Truss Plate Institute (www.tpinst.org) and **BCSI Building Component Safety Information** available from the Structural Building Component Association (www.sbcacomponents.com)

ENGINEERING BY TRENCO A MiTek Affiliate
818 Soundside Road
Edenton, NC 27932

Job	Truss	Truss Type	Qty	Ply	FFF-LOT #51 Roof
25-0542-A	T03	COMMON	1	1	I72048255 Job Reference (optional)

Riverside Roof Truss, LLC, Danville, Va - 24541, 8.730 s Feb 19 2025 MiTek Industries, Inc. Fri Mar 14 12:14:01 2025 Page 1
ID:BxI2MwYau_NHkbraGCmHIoyOvst-H5BwOvjdja5w?2dlZVuXsoLPgAlvbIYoj1LyyKzb0oa

0-11-0 | 6-3-14 | 12-7-12 | 18-11-10 | 25-3-8 | 26-2-8
0-11-0 | 6-3-14 | 6-3-14 | 6-3-14 | 6-3-14 | 0-11-0

Scale = 1:43.5

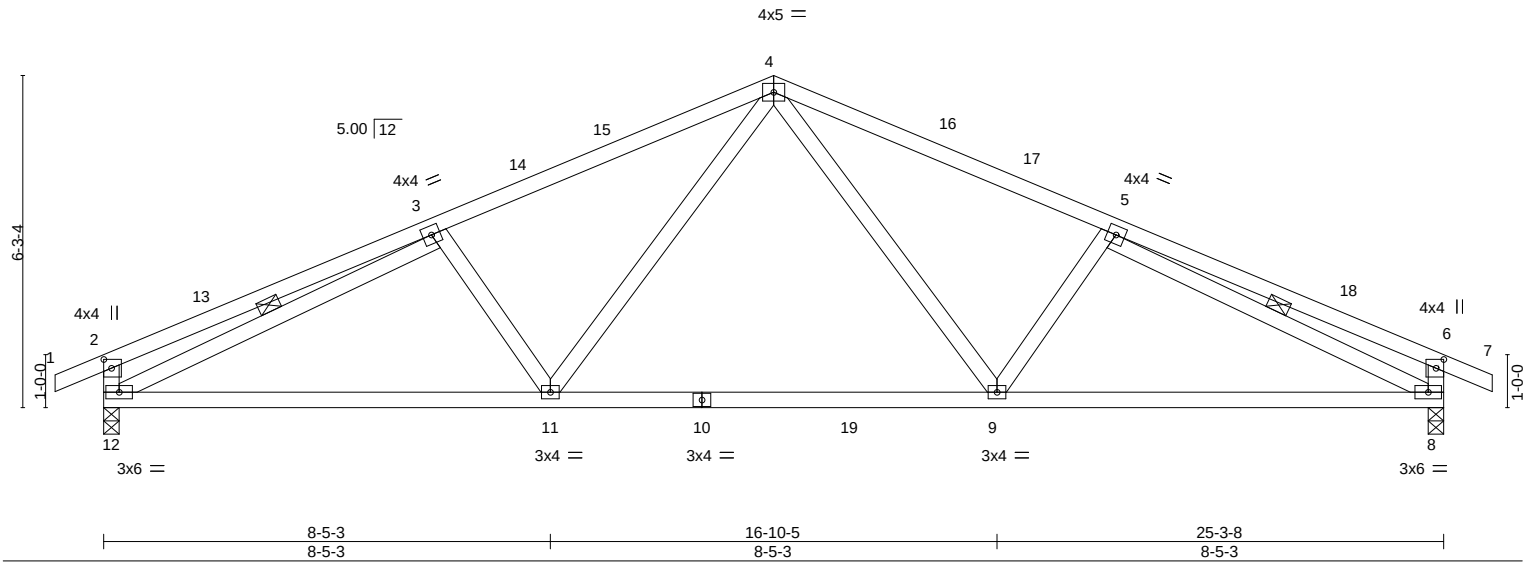

Plate Offsets (X,Y)-- [2:0-2-0,0-1-12], [6:0-2-0,0-1-12]

LOADING (psf)		**SPACING-** 2-0-0	**CSI.**		**DEFL.** in (loc) l/defl L/d	**PLATES**	**GRIP**
TCLL (roof)	20.0	Plate Grip DOL 1.15	TC	0.61	Vert(LL) -0.18 9-11 >999 240	MT20	244/190
Snow (Pf/Pg)	11.6/15.0	Lumber DOL 1.15	BC	0.87	Vert(CT) -0.29 9-11 >999 180		
TCDL	10.0	Rep Stress Incr YES	WB	0.42	Horz(CT) 0.06 8 n/a n/a		
BCLL	0.0 *	Code IRC2018/TPI2014	Matrix-MS			Weight: 135 lb	FT = 20%
BCDL	10.0						

LUMBER-
TOP CHORD 2x4 SP No.2
BOT CHORD 2x4 SP No.2
WEBS 2x4 SP No.3

BRACING-
TOP CHORD Structural wood sheathing directly applied or 3-10-7 oc purlins, except end verticals.
BOT CHORD Rigid ceiling directly applied or 10-0-0 oc bracing.
WEBS 1 Row at midpt 3-12, 5-8

REACTIONS. (size) 12=0-3-8, 8=0-3-8
Max Horz 12=-98(LC 14)
Max Uplift 12=-94(LC 16), 8=-94(LC 16)
Max Grav 12=1140(LC 30), 8=1140(LC 30)

FORCES. (lb) - Max. Comp./Max. Ten. - All forces 250 (lb) or less except when shown.
TOP CHORD 2-3=-430/98, 3-4=-1666/232, 4-5=-1667/232, 5-6=-429/98, 2-12=-367/136, 6-8=-367/137
BOT CHORD 11-12=-160/1592, 9-11=-59/1157, 8-9=-145/1574
WEBS 4-9=-27/591, 5-9=-270/154, 4-11=-27/591, 3-11=-270/154, 3-12=-1406/149, 5-8=-1406/148

NOTES-
1) Unbalanced roof live loads have been considered for this design.
2) Wind: ASCE 7-16; Vult=130mph (3-second gust) Vasd=103mph; TCDL=6.0psf; BCDL=6.0psf; h=25ft; B=45ft; L=25ft; eave=4ft; Cat. II; Exp B; Enclosed; MWFRS (directional) and C-C Exterior(2E) -0-11-0 to 2-1-0, Interior(1) 2-1-0 to 12-7-12, Exterior(2R) 12-7-12 to 15-7-12, Interior(1) 15-7-12 to 26-2-8 zone; cantilever left and right exposed ; end vertical left and right exposed;C-C for members and forces & MWFRS for reactions shown; Lumber DOL=1.60 plate grip DOL=1.60
3) TCLL: ASCE 7-16; Pr=20.0 psf (roof LL: Lum DOL=1.15 Plate DOL=1.15); Pg=15.0 psf; Pf=11.6 psf (Lum DOL=1.15 Plate DOL=1.15); Is=1.0; Rough Cat B; Partially Exp.; Ce=1.0; Cs=1.00; Ct=1.10
4) Unbalanced snow loads have been considered for this design.
5) This truss has been designed for greater of min roof live load of 12.0 psf or 1.00 times flat roof load of 11.6 psf on overhangs non-concurrent with other live loads.
6) This truss has been designed for a 10.0 psf bottom chord live load nonconcurrent with any other live loads.
7) * This truss has been designed for a live load of 20.0psf on the bottom chord in all areas where a rectangle 3-6-0 tall by 2-0-0 wide will fit between the bottom chord and any other members, with BCDL = 10.0psf.
8) Provide mechanical connection (by others) of truss to bearing plate capable of withstanding 100 lb uplift at joint(s) 12, 8.
9) This truss is designed in accordance with the 2018 International Residential Code sections R502.11.1 and R802.10.2 and referenced standard ANSI/TPI 1.

March 17,2025

WARNING - Verify design parameters and READ NOTES ON THIS AND INCLUDED MITEK REFERENCE PAGE MII-7473 rev. 1/2/2023 BEFORE USE.
Design valid for use only with MiTek® connectors. This design is based only upon parameters shown, and is for an individual building component, not a truss system. Before use, the building designer must verify the applicability of design parameters and properly incorporate this design into the overall building design. Bracing indicated is to prevent buckling of individual truss web and/or chord members only. Additional temporary and permanent bracing is always required for stability and to prevent collapse with possible personal injury and property damage. For general guidance regarding the fabrication, storage, delivery, erection and bracing of trusses and truss systems, see **ANSI/TPI1 Quality Criteria and DSB-22** available from Truss Plate Institute (www.tpinst.org) and **BCSI Building Component Safety Information** available from the Structural Building Component Association (www.sbcacomponents.com)

ENGINEERING BY TRENCO A MiTek Affiliate
818 Soundside Road
Edenton, NC 27932

Job	Truss	Truss Type	Qty	Ply	FFF-LOT #51 Roof
25-0542-A	T03G	COMMON GIRDER	1	4	I72048256 Job Reference (optional)

Riverside Roof Truss, LLC, Danville, Va - 24541, 8.730 s Feb 19 2025 MiTek Industries, Inc. Fri Mar 14 12:14:02 2025 Page 1
ID:BxI2MwYau_NHkbraGCmHIoyOvst-lHIlbFkFUuDndCCx7CPmP0uUPa9NKe4yyh5VUmzb0oZ

0-11-0	4-2-9	8-5-3	12-7-12	16-10-5	21-0-15	25-3-8
0-11-0	4-2-9	4-2-9	4-2-9	4-2-9	4-2-9	4-2-9

Scale = 1:45.3

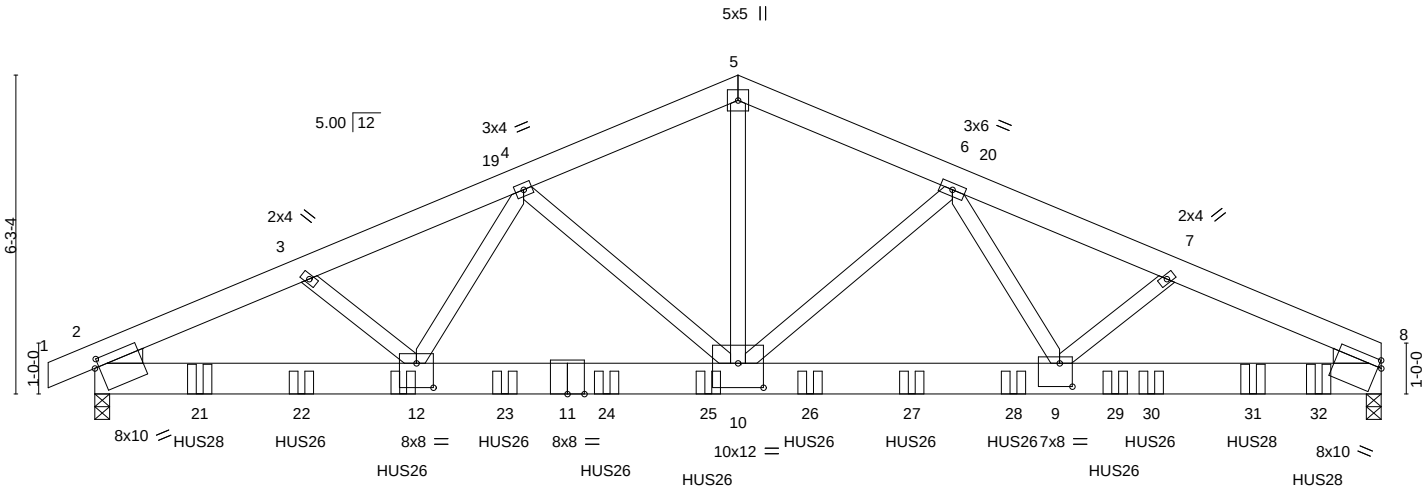

6-3-14	12-7-12	18-11-10	25-3-8
6-3-14	6-3-14	6-3-14	6-3-14

Plate Offsets (X,Y)-- [2:0-1-0,0-2-0], [8:0-0-12,0-1-12], [9:0-3-0,0-5-8], [10:0-6-0,0-5-12], [12:0-4-0,0-5-12]

LOADING (psf)		**SPACING-** 2-0-0	**CSI.**		**DEFL.**	in	(loc)	l/defl	L/d	**PLATES**	**GRIP**
TCLL (roof)	20.0	Plate Grip DOL 1.15	TC	0.99	Vert(LL)	-0.16	9-10	>999	240	MT20	244/190
Snow (Pf/Pg)	11.6/15.0	Lumber DOL 1.15	BC	0.60	Vert(CT)	-0.30	9-10	>996	180		
TCDL	10.0	Rep Stress Incr NO	WB	0.85	Horz(CT)	0.07	8	n/a	n/a		
BCLL	0.0 *	Code IRC2018/TPI2014	Matrix-MS							Weight: 763 lb	FT = 20%
BCDL	10.0										

LUMBER-
TOP CHORD 2x6 SP 2400F 2.0E *Except*
5-8: 2x6 SP No.2
BOT CHORD 2x8 SP DSS
WEBS 2x4 SP No.3 *Except*
5-10: 2x4 SP No.2
WEDGE
Left: 2x4 SP No.3 , Right: 2x4 SP No.3

BRACING-
TOP CHORD Structural wood sheathing directly applied or 5-1-1 oc purlins.
BOT CHORD Rigid ceiling directly applied or 10-0-0 oc bracing.

REACTIONS. (size) 8=0-3-8, 2=0-3-8
Max Horz 2=74(LC 37)
Max Uplift 8=-503(LC 12), 2=-558(LC 12)
Max Grav 8=13329(LC 3), 2=11115(LC 3)

FORCES. (lb) - Max. Comp./Max. Ten. - All forces 250 (lb) or less except when shown.
TOP CHORD 2-3=-19446/914, 3-4=-20043/929, 4-5=-15842/666, 5-6=-15846/666, 6-7=-21962/806, 7-8=-21485/801
BOT CHORD 2-12=-790/17434, 10-12=-677/16887, 9-10=-614/17789, 8-9=-695/19401
WEBS 5-10=-439/11891, 6-10=-4400/187, 6-9=-107/5518, 7-9=-89/1398, 4-10=-3163/272, 4-12=-221/3694, 3-12=-100/1671

NOTES-
1) 4-ply truss to be connected together with 10d (0.131"x3") nails as follows:
Top chords connected as follows: 2x6 - 2 rows staggered at 0-9-0 oc.
Bottom chords connected as follows: 2x8 - 3 rows staggered at 0-4-0 oc.
Webs connected as follows: 2x4 - 1 row at 0-9-0 oc.
Attach BC w/ 1/2" diam. bolts (ASTM A-307) in the center of the member w/washers at 4-0-0 oc.
2) All loads are considered equally applied to all plies, except if noted as front (F) or back (B) face in the LOAD CASE(S) section. Ply to ply connections have been provided to distribute only loads noted as (F) or (B), unless otherwise indicated.
3) Unbalanced roof live loads have been considered for this design.
4) Wind: ASCE 7-16; Vult=130mph (3-second gust) Vasd=103mph; TCDL=6.0psf; BCDL=6.0psf; h=25ft; B=45ft; L=25ft; eave=4ft; Cat. II; Exp B; Enclosed; MWFRS (directional); cantilever left and right exposed ; end vertical left and right exposed; Lumber DOL=1.60 plate grip DOL=1.60
5) TCLL: ASCE 7-16; Pr=20.0 psf (roof LL: Lum DOL=1.15 Plate DOL=1.15); Pg=15.0 psf; Pf=11.6 psf (Lum DOL=1.15 Plate DOL=1.15); Is=1.0; Rough Cat B; Partially Exp.; Ce=1.0; Cs=1.00; Ct=1.10
6) Unbalanced snow loads have been considered for this design.
7) This truss has been designed for greater of min roof live load of 12.0 psf or 1.00 times flat roof load of 11.6 psf on overhangs non-concurrent with other live loads.
8) This truss has been designed for a 10.0 psf bottom chord live load nonconcurrent with any other live loads.
9) * This truss has been designed for a live load of 20.0psf on the bottom chord in all areas where a rectangle 3-6-0 tall by 2-0-0 wide will fit between the bottom chord and any other members.

March 17,2025

Continued on page 2

WARNING - Verify design parameters and READ NOTES ON THIS AND INCLUDED MITEK REFERENCE PAGE MII-7473 rev. 1/2/2023 BEFORE USE.
Design valid for use only with MiTek® connectors. This design is based only upon parameters shown, and is for an individual building component, not a truss system. Before use, the building designer must verify the applicability of design parameters and properly incorporate this design into the overall building design. Bracing indicated is to prevent buckling of individual truss web and/or chord members only. Additional temporary and permanent bracing is always required for stability and to prevent collapse with possible personal injury and property damage. For general guidance regarding the fabrication, storage, delivery, erection and bracing of trusses and truss systems, see **ANSI/TPI1 Quality Criteria and DSB-22** available from Truss Plate Institute (www.tpinst.org) and **BCSI Building Component Safety Information** available from the Structural Building Component Association (www.sbcacomponents.com)

ENGINEERING BY TRENCO A MiTek Affiliate
818 Soundside Road
Edenton, NC 27932

NOTES-

10) Provide mechanical connection (by others) of truss to bearing plate capable of withstanding 100 lb uplift at joint(s) except (jt=lb) 8=503, 2=558.
11) This truss is designed in accordance with the 2018 International Residential Code sections R502.11.1 and R802.10.2 and referenced standard ANSI/TPI 1.
12) Use Simpson Strong-Tie HUS28 (22-10d Girder, 4-10d Truss, Single Ply Girder) or equivalent spaced at 20-8-8 oc max. starting at 2-0-12 from the left end to 24-0-12 to connect truss(es) to back face of bottom chord.
13) Use Simpson Strong-Tie HUS26 (14-16d Girder, 4-16d Truss) or equivalent spaced at 2-0-0 oc max. starting at 4-0-12 from the left end to 20-9-4 to connect truss(es) to back face of bottom chord.
14) Fill all nail holes where hanger is in contact with lumber.

LOAD CASE(S) Standard

1) Dead + Snow (balanced): Lumber Increase=1.15, Plate Increase=1.15
   Uniform Loads (plf)
   Vert: 1-5=-43, 5-8=-43, 13-16=-20
   Concentrated Loads (lb)
   Vert: 12=-1174(B) 21=-1174(B) 22=-1174(B) 23=-1174(B) 24=-1259(B) 25=-1259(B) 26=-1259(B) 27=-1259(B) 28=-1259(B) 29=-1259(B) 30=-1259(B) 31=-1259(B) 32=-1174(B)

WARNING - Verify design parameters and READ NOTES ON THIS AND INCLUDED MITEK REFERENCE PAGE MII-7473 rev. 1/2/2023 BEFORE USE.
Design valid for use only with MiTek® connectors. This design is based only upon parameters shown, and is for an individual building component, not a truss system. Before use, the building designer must verify the applicability of design parameters and properly incorporate this design into the overall building design. Bracing indicated is to prevent buckling of individual truss web and/or chord members only. Additional temporary and permanent bracing is always required for stability and to prevent collapse with possible personal injury and property damage. For general guidance regarding the fabrication, storage, delivery, erection and bracing of trusses and truss systems, see **ANSI/TPI1 Quality Criteria and DSB-22** available from Truss Plate Institute (www.tpinst.org) and **BCSI Building Component Safety Information** available from the Structural Building Component Association (www.sbcacomponents.com)

ENGINEERING BY TRENCO A MiTek Affiliate
818 Soundside Road
Edenton, NC 27932

Job	Truss	Truss Type	Qty	Ply	FFF-LOT #51 Roof
25-0542-A	T03GE	COMMON SUPPORTED GAB	1	1	I72048257 Job Reference (optional)

Riverside Roof Truss, LLC, Danville, Va - 24541, 8.730 s Feb 19 2025 MiTek Industries, Inc. Fri Mar 14 12:14:03 2025 Page 1
ID:BxI2MwYau_NHkbraGCmHIoyOvst-DTJgobltFBLeELn7hww?xDQtMzeQ3HP5ALq30Czb0oY

0-11-0 / 0-11-0 — 12-7-12 / 12-7-12 — 25-3-8 / 12-7-12 — 26-2-8 / 0-11-0

Scale = 1:44.4

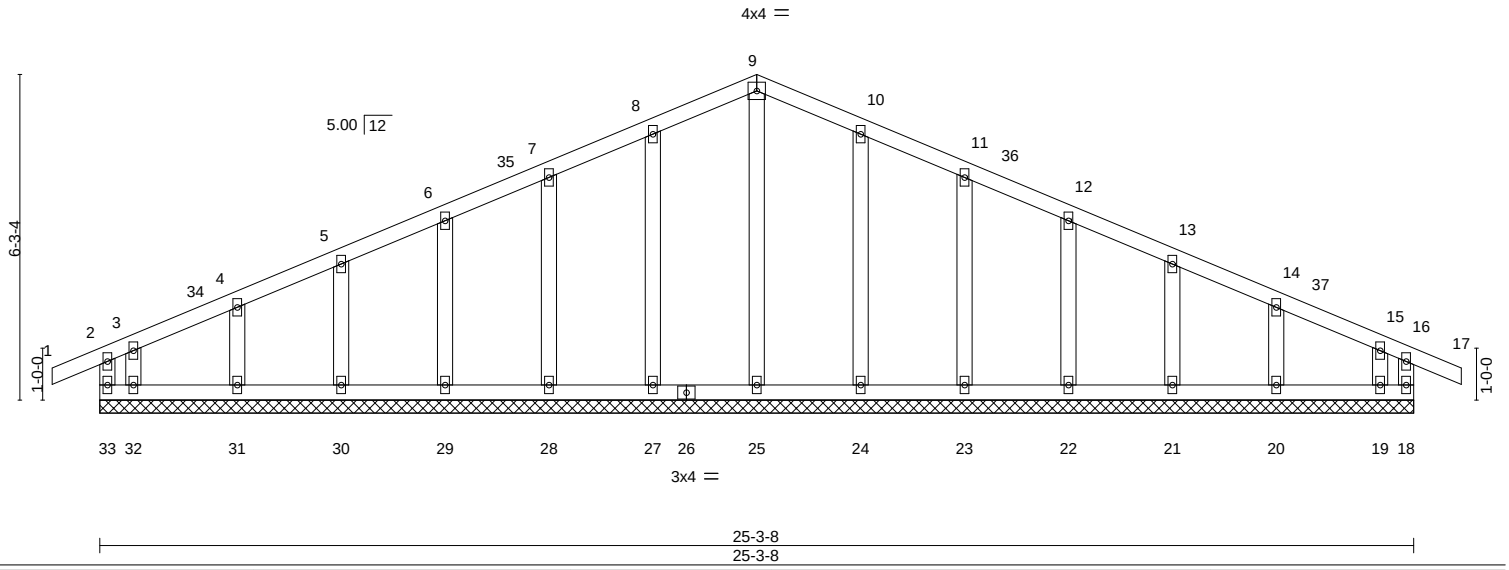

LOADING (psf)		SPACING-	2-0-0	CSI.		DEFL.	in	(loc)	l/defl	L/d	PLATES	GRIP
TCLL (roof)	20.0	Plate Grip DOL	1.15	TC	0.09	Vert(LL)	-0.00	17	n/r	120	MT20	244/190
Snow (Pf/Pg)	11.6/15.0	Lumber DOL	1.15	BC	0.04	Vert(CT)	-0.00	17	n/r	120		
TCDL	10.0	Rep Stress Incr	YES	WB	0.08	Horz(CT)	0.00	18	n/a	n/a		
BCLL	0.0 *	Code IRC2018/TPI2014		Matrix-R							Weight: 142 lb	FT = 20%
BCDL	10.0											

LUMBER-

TOP CHORD	2x4 SP No.2
BOT CHORD	2x4 SP No.2
WEBS	2x4 SP No.3
OTHERS	2x4 SP No.3

BRACING-

TOP CHORD	Structural wood sheathing directly applied or 6-0-0 oc purlins, except end verticals.
BOT CHORD	Rigid ceiling directly applied or 6-0-0 oc bracing.

REACTIONS. All bearings 25-3-8.
(lb) - Max Horz 33=-98(LC 14)
Max Uplift All uplift 100 lb or less at joint(s) 33, 18, 27, 28, 29, 30, 31, 32, 24, 23, 22, 21, 20, 19
Max Grav All reactions 250 lb or less at joint(s) 33, 18, 25, 27, 28, 29, 30, 31, 32, 24, 23, 22, 21, 20, 19

FORCES. (lb) - Max. Comp./Max. Ten. - All forces 250 (lb) or less except when shown.

NOTES-

1) Unbalanced roof live loads have been considered for this design.
2) Wind: ASCE 7-16; Vult=130mph (3-second gust) Vasd=103mph; TCDL=6.0psf; BCDL=6.0psf; h=25ft; B=45ft; L=25ft; eave=2ft; Cat. II; Exp B; Enclosed; MWFRS (directional) and C-C Corner(3E) -0-11-0 to 2-1-0, Exterior(2N) 2-1-0 to 12-7-12, Corner(3R) 12-7-12 to 15-7-12, Exterior(2N) 15-7-12 to 26-2-8 zone; cantilever left and right exposed ; end vertical left and right exposed;C-C for members and forces & MWFRS for reactions shown; Lumber DOL=1.60 plate grip DOL=1.60
3) Truss designed for wind loads in the plane of the truss only. For studs exposed to wind (normal to the face), see Standard Industry Gable End Details as applicable, or consult qualified building designer as per ANSI/TPI 1.
4) TCLL: ASCE 7-16; Pr=20.0 psf (roof LL: Lum DOL=1.15 Plate DOL=1.15); Pg=15.0 psf; Pf=11.6 psf (Lum DOL=1.15 Plate DOL=1.15); Is=1.0; Rough Cat B; Partially Exp.; Ce=1.0; Cs=1.00; Ct=1.10
5) Unbalanced snow loads have been considered for this design.
6) This truss has been designed for greater of min roof live load of 12.0 psf or 1.00 times flat roof load of 11.6 psf on overhangs non-concurrent with other live loads.
7) All plates are 2x4 MT20 unless otherwise indicated.
8) Gable requires continuous bottom chord bearing.
9) Truss to be fully sheathed from one face or securely braced against lateral movement (i.e. diagonal web).
10) Gable studs spaced at 2-0-0 oc.
11) This truss has been designed for a 10.0 psf bottom chord live load nonconcurrent with any other live loads.
12) * This truss has been designed for a live load of 20.0psf on the bottom chord in all areas where a rectangle 3-6-0 tall by 2-0-0 wide will fit between the bottom chord and any other members.
13) Provide mechanical connection (by others) of truss to bearing plate capable of withstanding 100 lb uplift at joint(s) 33, 18, 27, 28, 29, 30, 31, 32, 24, 23, 22, 21, 20, 19.
14) This truss is designed in accordance with the 2018 International Residential Code sections R502.11.1 and R802.10.2 and referenced standard ANSI/TPI 1.

March 17,2025

WARNING - Verify design parameters and READ NOTES ON THIS AND INCLUDED MITEK REFERENCE PAGE MII-7473 rev. 1/2/2023 BEFORE USE.
Design valid for use only with MiTek® connectors. This design is based only upon parameters shown, and is for an individual building component, not a truss system. Before use, the building designer must verify the applicability of design parameters and properly incorporate this design into the overall building design. Bracing indicated is to prevent buckling of individual truss web and/or chord members only. Additional temporary and permanent bracing is always required for stability and to prevent collapse with possible personal injury and property damage. For general guidance regarding the fabrication, storage, delivery, erection and bracing of trusses and truss systems, see **ANSI/TPI1 Quality Criteria and DSB-22** available from Truss Plate Institute (www.tpinst.org) and **BCSI Building Component Safety Information** available from the Structural Building Component Association (www.sbcacomponents.com)

ENGINEERING BY TRENCO A MiTek Affiliate
818 Soundside Road
Edenton, NC 27932

Job	Truss	Truss Type	Qty	Ply	FFF-LOT #51 Roof
25-0542-A	T04	COMMON	6	1	I72048258 Job Reference (optional)

Riverside Roof Truss, LLC, Danville, Va - 24541, 8.730 s Feb 19 2025 MiTek Industries, Inc. Fri Mar 14 12:14:04 2025 Page 1

ID:BxI2MwYau_NHkbraGCmHIoyOvst-hgt30xmV0VTVsVLJEdREURzuvNnOoZEFP?acYezb0oX

-0-11-0	6-4-11	12-9-5	19-2-0	25-6-11	31-11-5	38-4-0	39-3-0
0-11-0	6-4-11	6-4-11	6-4-11	6-4-11	6-4-11	6-4-11	0-11-0

Scale = 1:65.8

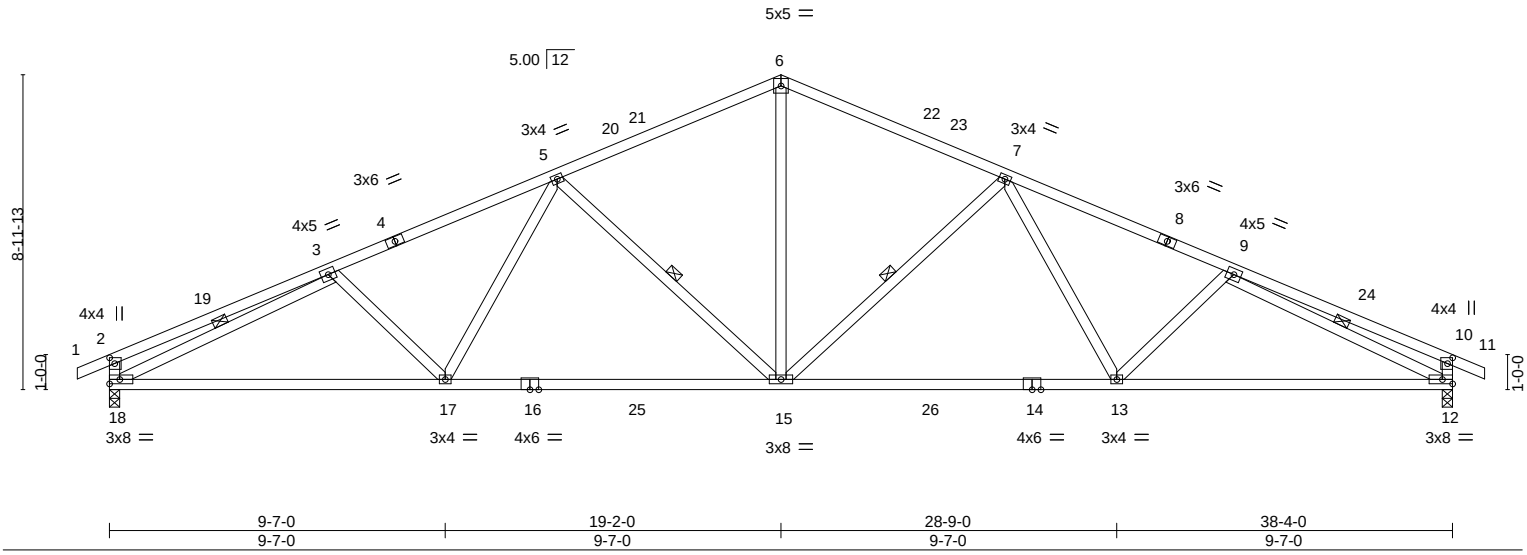

9-7-0	19-2-0	28-9-0	38-4-0
9-7-0	9-7-0	9-7-0	9-7-0

Plate Offsets (X,Y)-- [2:0-2-0,0-1-12], [10:0-2-0,0-1-12]

LOADING (psf)		**SPACING-** 2-0-0	**CSI.**		**DEFL.** in (loc) l/defl L/d	**PLATES**	**GRIP**
TCLL (roof)	20.0	Plate Grip DOL 1.15	TC	0.74	Vert(LL) -0.30 13-15 >999 240	MT20	244/190
Snow (Pf/Pg)	11.6/15.0	Lumber DOL 1.15	BC	0.89	Vert(CT) -0.53 13-15 >860 180		
TCDL	10.0	Rep Stress Incr YES	WB	0.75	Horz(CT) 0.13 12 n/a n/a		
BCLL	0.0 *	Code IRC2018/TPI2014	Matrix-MS			Weight: 214 lb	FT = 20%
BCDL	10.0						

LUMBER-
TOP CHORD 2x4 SP No.2
BOT CHORD 2x4 SP No.1
WEBS 2x4 SP No.3

BRACING-
TOP CHORD Structural wood sheathing directly applied or 3-0-14 oc purlins, except end verticals.
BOT CHORD Rigid ceiling directly applied or 10-0-0 oc bracing.
WEBS 1 Row at midpt 7-15, 5-15, 3-18, 9-12

REACTIONS. (size) 18=0-3-8, 12=0-3-8
Max Horz 18=-159(LC 14)
Max Uplift 18=-126(LC 16), 12=-126(LC 16)
Max Grav 18=1738(LC 28), 12=1738(LC 29)

FORCES. (lb) - Max. Comp./Max. Ten. - All forces 250 (lb) or less except when shown.
TOP CHORD 2-3=-588/97, 3-5=-2863/256, 5-6=-2124/271, 6-7=-2124/271, 7-9=-2863/256, 9-10=-587/96, 2-18=-438/140, 10-12=-438/140
BOT CHORD 17-18=-190/2711, 15-17=-131/2446, 13-15=-116/2387, 12-13=-180/2616
WEBS 6-15=-64/1290, 7-15=-723/138, 7-13=0/472, 5-15=-723/138, 5-17=0/472, 3-18=-2448/190, 9-12=-2448/189

NOTES-
1) Unbalanced roof live loads have been considered for this design.
2) Wind: ASCE 7-16; Vult=130mph (3-second gust) Vasd=103mph; TCDL=6.0psf; BCDL=6.0psf; h=25ft; B=45ft; L=38ft; eave=5ft; Cat. II; Exp B; Enclosed; MWFRS (directional) and C-C Exterior(2E) -0-11-0 to 2-11-0, Interior(1) 2-11-0 to 19-2-0, Exterior(2R) 19-2-0 to 23-0-0, Interior(1) 23-0-0 to 39-3-0 zone; cantilever left and right exposed ; end vertical left and right exposed;C-C for members and forces & MWFRS for reactions shown; Lumber DOL=1.60 plate grip DOL=1.60
3) TCLL: ASCE 7-16; Pr=20.0 psf (roof LL: Lum DOL=1.15 Plate DOL=1.15); Pg=15.0 psf; Pf=11.6 psf (Lum DOL=1.15 Plate DOL=1.15); Is=1.0; Rough Cat B; Partially Exp.; Ce=1.0; Cs=1.00; Ct=1.10
4) Unbalanced snow loads have been considered for this design.
5) This truss has been designed for greater of min roof live load of 12.0 psf or 1.00 times flat roof load of 11.6 psf on overhangs non-concurrent with other live loads.
6) This truss has been designed for a 10.0 psf bottom chord live load nonconcurrent with any other live loads.
7) * This truss has been designed for a live load of 20.0psf on the bottom chord in all areas where a rectangle 3-6-0 tall by 2-0-0 wide will fit between the bottom chord and any other members, with BCDL = 10.0psf.
8) Provide mechanical connection (by others) of truss to bearing plate capable of withstanding 100 lb uplift at joint(s) except (jt=lb) 18=126, 12=126.
9) This truss is designed in accordance with the 2018 International Residential Code sections R502.11.1 and R802.10.2 and referenced standard ANSI/TPI 1.

March 17,2025

WARNING - Verify design parameters and READ NOTES ON THIS AND INCLUDED MITEK REFERENCE PAGE MII-7473 rev. 1/2/2023 BEFORE USE.
Design valid for use only with MiTek® connectors. This design is based only upon parameters shown, and is for an individual building component, not a truss system. Before use, the building designer must verify the applicability of design parameters and properly incorporate this design into the overall building design. Bracing indicated is to prevent buckling of individual truss web and/or chord members only. Additional temporary and permanent bracing is always required for stability and to prevent collapse with possible personal injury and property damage. For general guidance regarding the fabrication, storage, delivery, erection and bracing of trusses and truss systems, see **ANSI/TPI1 Quality Criteria and DSB-22** available from Truss Plate Institute (www.tpinst.org) and **BCSI Building Component Safety Information** available from the Structural Building Component Association (www.sbcacomponents.com)

ENGINEERING BY TRENCO A MiTek Affiliate
818 Soundside Road
Edenton, NC 27932

Job	Truss	Truss Type	Qty	Ply	FFF-LOT #51 Roof
25-0542-A	T04A	COMMON	5	1	I72048259 Job Reference (optional)

Riverside Roof Truss, LLC, Danville, Va - 24541, 8.730 s Feb 19 2025 MiTek Industries, Inc. Fri Mar 14 12:14:05 2025 Page 1

ID:BxI2MwYau_NHkbraGCmHloyOvst-9sRRDGn7npbMUfwWoLyT1eW3hn6aX0GOefJ955zb0oW

-0-11-0	6-4-11	12-9-5	19-2-0	25-6-11	31-11-5	38-2-0
0-11-0	6-4-11	6-4-11	6-4-11	6-4-11	6-4-11	6-2-11

Scale = 1:65.4

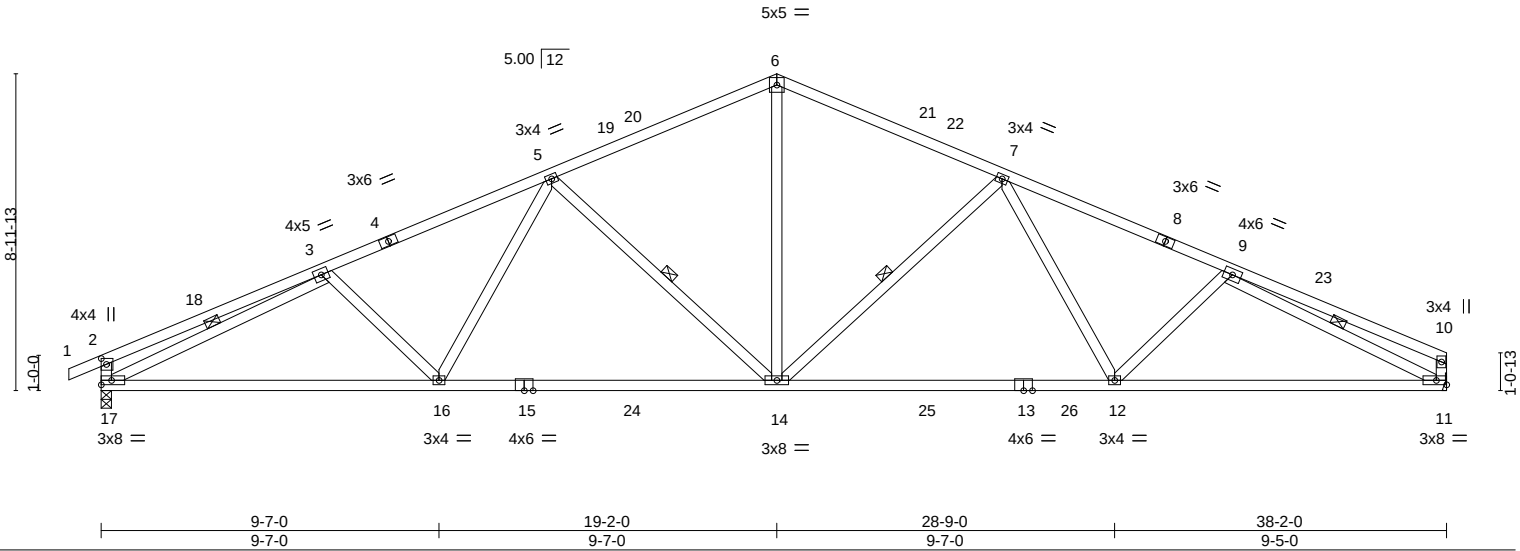

9-7-0	19-2-0	28-9-0	38-2-0
9-7-0	9-7-0	9-7-0	9-5-0

Plate Offsets (X,Y)-- [2:0-2-0,0-1-12]

LOADING (psf)		**SPACING-** 2-0-0	**CSI.**		**DEFL.** in (loc) l/defl L/d	**PLATES**	**GRIP**
TCLL (roof)	20.0	Plate Grip DOL 1.15	TC	0.74	Vert(LL) -0.30 12-14 >999 240	MT20	244/190
Snow (Pf/Pg)	11.6/15.0	Lumber DOL 1.15	BC	0.89	Vert(CT) -0.53 12-14 >851 180		
TCDL	10.0	Rep Stress Incr YES	WB	0.76	Horz(CT) 0.13 11 n/a n/a		
BCLL	0.0 *	Code IRC2018/TPI2014	Matrix-MS			Weight: 212 lb	FT = 20%
BCDL	10.0						

LUMBER-
TOP CHORD 2x4 SP No.2
BOT CHORD 2x4 SP No.1
WEBS 2x4 SP No.3

BRACING-
TOP CHORD Structural wood sheathing directly applied or 3-0-15 oc purlins, except end verticals.
BOT CHORD Rigid ceiling directly applied or 10-0-0 oc bracing.
WEBS 1 Row at midpt 5-14, 7-14, 3-17, 9-11

REACTIONS. (size) 17=0-3-8, 11=Mechanical
Max Horz 17=160(LC 15)
Max Uplift 17=-125(LC 16), 11=-92(LC 16)
Max Grav 17=1733(LC 28), 11=1678(LC 29)

FORCES. (lb) - Max. Comp./Max. Ten. - All forces 250 (lb) or less except when shown.
TOP CHORD 2-3=-587/97, 3-5=-2851/255, 5-6=-2112/270, 6-7=-2111/272, 7-9=-2828/260, 9-10=-428/61, 2-17=-438/140, 10-11=-302/74
BOT CHORD 16-17=-217/2696, 14-16=-159/2430, 12-14=-144/2362, 11-12=-214/2563
WEBS 5-16=0/472, 5-14=-722/138, 6-14=-64/1280, 7-14=-705/137, 7-12=0/452, 3-17=-2437/189, 9-11=-2558/226

NOTES-
1) Unbalanced roof live loads have been considered for this design.
2) Wind: ASCE 7-16; Vult=130mph (3-second gust) Vasd=103mph; TCDL=6.0psf; BCDL=6.0psf; h=25ft; B=45ft; L=38ft; eave=5ft; Cat. II; Exp B; Enclosed; MWFRS (directional) and C-C Exterior(2E) -0-11-0 to 2-10-13, Interior(1) 2-10-13 to 19-2-0, Exterior(2R) 19-2-0 to 22-11-13, Interior(1) 22-11-13 to 38-0-4 zone; cantilever left and right exposed ; end vertical left and right exposed;C-C for members and forces & MWFRS for reactions shown; Lumber DOL=1.60 plate grip DOL=1.60
3) TCLL: ASCE 7-16; Pr=20.0 psf (roof LL: Lum DOL=1.15 Plate DOL=1.15); Pg=15.0 psf; Pf=11.6 psf (Lum DOL=1.15 Plate DOL=1.15); Is=1.0; Rough Cat B; Partially Exp.; Ce=1.0; Cs=1.00; Ct=1.10
4) Unbalanced snow loads have been considered for this design.
5) This truss has been designed for greater of min roof live load of 12.0 psf or 1.00 times flat roof load of 11.6 psf on overhangs non-concurrent with other live loads.
6) This truss has been designed for a 10.0 psf bottom chord live load nonconcurrent with any other live loads.
7) * This truss has been designed for a live load of 20.0psf on the bottom chord in all areas where a rectangle 3-6-0 tall by 2-0-0 wide will fit between the bottom chord and any other members, with BCDL = 10.0psf.
8) Refer to girder(s) for truss to truss connections.
9) Provide mechanical connection (by others) of truss to bearing plate capable of withstanding 100 lb uplift at joint(s) 11 except (jt=lb) 17=125.
10) This truss is designed in accordance with the 2018 International Residential Code sections R502.11.1 and R802.10.2 and referenced standard ANSI/TPI 1.

March 17,2025

WARNING - Verify design parameters and READ NOTES ON THIS AND INCLUDED MITEK REFERENCE PAGE MII-7473 rev. 1/2/2023 BEFORE USE.
Design valid for use only with MiTek® connectors. This design is based only upon parameters shown, and is for an individual building component, not a truss system. Before use, the building designer must verify the applicability of design parameters and properly incorporate this design into the overall building design. Bracing indicated is to prevent buckling of individual truss web and/or chord members only. Additional temporary and permanent bracing is always required for stability and to prevent collapse with possible personal injury and property damage. For general guidance regarding the fabrication, storage, delivery, erection and bracing of trusses and truss systems, see **ANSI/TPI1 Quality Criteria and DSB-22** available from Truss Plate Institute (www.tpinst.org) and **BCSI Building Component Safety Information** available from the Structural Building Component Association (www.sbcacomponents.com)

ENGINEERING BY TRENCO A MiTek Affiliate
818 Soundside Road
Edenton, NC 27932

Job	Truss	Truss Type	Qty	Ply	FFF-LOT #51 Roof
25-0542-A	T04AGE	COMMON SUPPORTED GAB	1	1	I72048260 Job Reference (optional)

Riverside Roof Truss, LLC, Danville, Va - 24541, 8.730 s Feb 19 2025 MiTek Industries, Inc. Fri Mar 14 12:14:06 2025 Page 1
ID:BxI2MwYau_NHkbraGCmHIoyOvst-d2?pRcnmY6jD5pViM2UiZs2O6BfrGciXtJ3jdXzb0oV

-0-11-0 19-2-0 38-0-8
0-11-0 19-2-0 18-10-8

Scale = 1:62.5

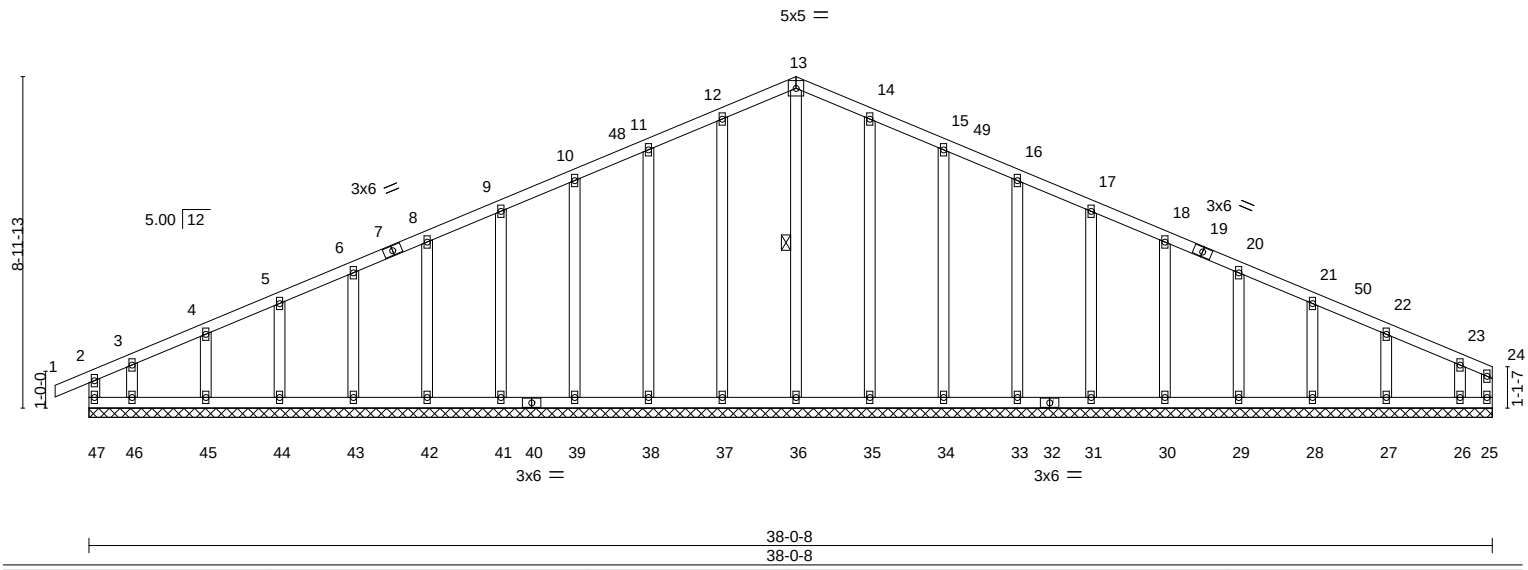

LOADING (psf)		SPACING-	2-0-0	CSI.		DEFL.	in	(loc)	l/defl	L/d	PLATES	GRIP
TCLL (roof)	20.0	Plate Grip DOL	1.15	TC	0.12	Vert(LL)	-0.00	1	n/r	120	MT20	244/190
Snow (Pf/Pg)	11.6/15.0	Lumber DOL	1.15	BC	0.05	Vert(CT)	-0.00	1	n/r	120		
TCDL	10.0	Rep Stress Incr	YES	WB	0.17	Horz(CT)	-0.00	25	n/a	n/a		
BCLL	0.0 *	Code IRC2018/TPI2014		Matrix-R							Weight: 248 lb	FT = 20%
BCDL	10.0											

LUMBER-

TOP CHORD	2x4 SP No.2
BOT CHORD	2x4 SP No.2
WEBS	2x4 SP No.3
OTHERS	2x4 SP No.3

BRACING-

TOP CHORD	Structural wood sheathing directly applied or 6-0-0 oc purlins, except end verticals.
BOT CHORD	Rigid ceiling directly applied or 6-0-0 oc bracing.
WEBS	1 Row at midpt 13-36

REACTIONS. All bearings 38-0-8.
(lb) - Max Horz 47=161(LC 15)
Max Uplift All uplift 100 lb or less at joint(s) 47, 25, 37, 38, 39, 41, 42, 43, 44, 45, 46, 35, 34, 33, 31, 30, 29, 28, 27, 26
Max Grav All reactions 250 lb or less at joint(s) 47, 25, 36, 37, 38, 39, 41, 42, 43, 44, 45, 46, 35, 34, 33, 31, 30, 29, 28, 27, 26

FORCES. (lb) - Max. Comp./Max. Ten. - All forces 250 (lb) or less except when shown.
TOP CHORD 11-12=-98/258, 12-13=-111/291, 13-14=-111/291, 14-15=-98/258

NOTES-
1) Unbalanced roof live loads have been considered for this design.
2) Wind: ASCE 7-16; Vult=130mph (3-second gust) Vasd=103mph; TCDL=6.0psf; BCDL=6.0psf; h=25ft; B=45ft; L=38ft; eave=2ft; Cat. II; Exp B; Enclosed; MWFRS (directional) and C-C Corner(3E) -0-11-0 to 3-2-0, Exterior(2N) 3-2-0 to 19-2-0, Corner(3R) 19-2-0 to 23-2-0, Exterior(2N) 23-2-0 to 37-10-12 zone; cantilever left and right exposed ; end vertical left and right exposed;C-C for members and forces & MWFRS for reactions shown; Lumber DOL=1.60 plate grip DOL=1.60
3) Truss designed for wind loads in the plane of the truss only. For studs exposed to wind (normal to the face), see Standard Industry Gable End Details as applicable, or consult qualified building designer as per ANSI/TPI 1.
4) TCLL: ASCE 7-16; Pr=20.0 psf (roof LL: Lum DOL=1.15 Plate DOL=1.15); Pg=15.0 psf; Pf=11.6 psf (Lum DOL=1.15 Plate DOL=1.15); Is=1.0; Rough Cat B; Partially Exp.; Ce=1.0; Cs=1.00; Ct=1.10
5) Unbalanced snow loads have been considered for this design.
6) This truss has been designed for greater of min roof live load of 12.0 psf or 1.00 times flat roof load of 11.6 psf on overhangs non-concurrent with other live loads.
7) All plates are 2x4 MT20 unless otherwise indicated.
8) Gable requires continuous bottom chord bearing.
9) Truss to be fully sheathed from one face or securely braced against lateral movement (i.e. diagonal web).
10) Gable studs spaced at 2-0-0 oc.
11) This truss has been designed for a 10.0 psf bottom chord live load nonconcurrent with any other live loads.
12) * This truss has been designed for a live load of 20.0psf on the bottom chord in all areas where a rectangle 3-6-0 tall by 2-0-0 wide will fit between the bottom chord and any other members.
13) Provide mechanical connection (by others) of truss to bearing plate capable of withstanding 100 lb uplift at joint(s) 47, 25, 37, 38, 39, 41, 42, 43, 44, 45, 46, 35, 34, 33, 31, 30, 29, 28, 27, 26.
14) This truss is designed in accordance with the 2018 International Residential Code sections R502.11.1 and R802.10.2 and referenced standard ANSI/TPI 1.

March 17,2025

WARNING - Verify design parameters and READ NOTES ON THIS AND INCLUDED MITEK REFERENCE PAGE MII-7473 rev. 1/2/2023 BEFORE USE.
Design valid for use only with MiTek® connectors. This design is based only upon parameters shown, and is for an individual building component, not a truss system. Before use, the building designer must verify the applicability of design parameters and properly incorporate this design into the overall building design. Bracing indicated is to prevent buckling of individual truss web and/or chord members only. Additional temporary and permanent bracing is always required for stability and to prevent collapse with possible personal injury and property damage. For general guidance regarding the fabrication, storage, delivery, erection and bracing of trusses and truss systems, see **ANSI/TPI1 Quality Criteria and DSB-22** available from Truss Plate Institute (www.tpinst.org) and **BCSI Building Component Safety Information** available from the Structural Building Component Association (www.sbcacomponents.com)

ENGINEERING BY TRENCO A MiTek Affiliate
818 Soundside Road
Edenton, NC 27932

Job	Truss	Truss Type	Qty	Ply	FFF-LOT #51 Roof
25-0542-A	T04AS	COMMON	8	1	I72048261 Job Reference (optional)

Riverside Roof Truss, LLC, Danville, Va - 24541, 8.730 s Feb 19 2025 MiTek Industries, Inc. Fri Mar 14 12:14:07 2025 Page 1
ID:BxI2MwYau_NHkbraGCmHIoyOvst-5FYBeyoOJQr4jz4uwm?x63bPGbnu?xah5zoG9zzb0oU

-0-11-0	7-1-0	14-2-0	19-2-0	24-2-0	31-3-0	38-2-0
0-11-0	7-1-0	7-1-0	5-0-0	5-0-0	7-1-0	6-11-0

Scale = 1:65.7

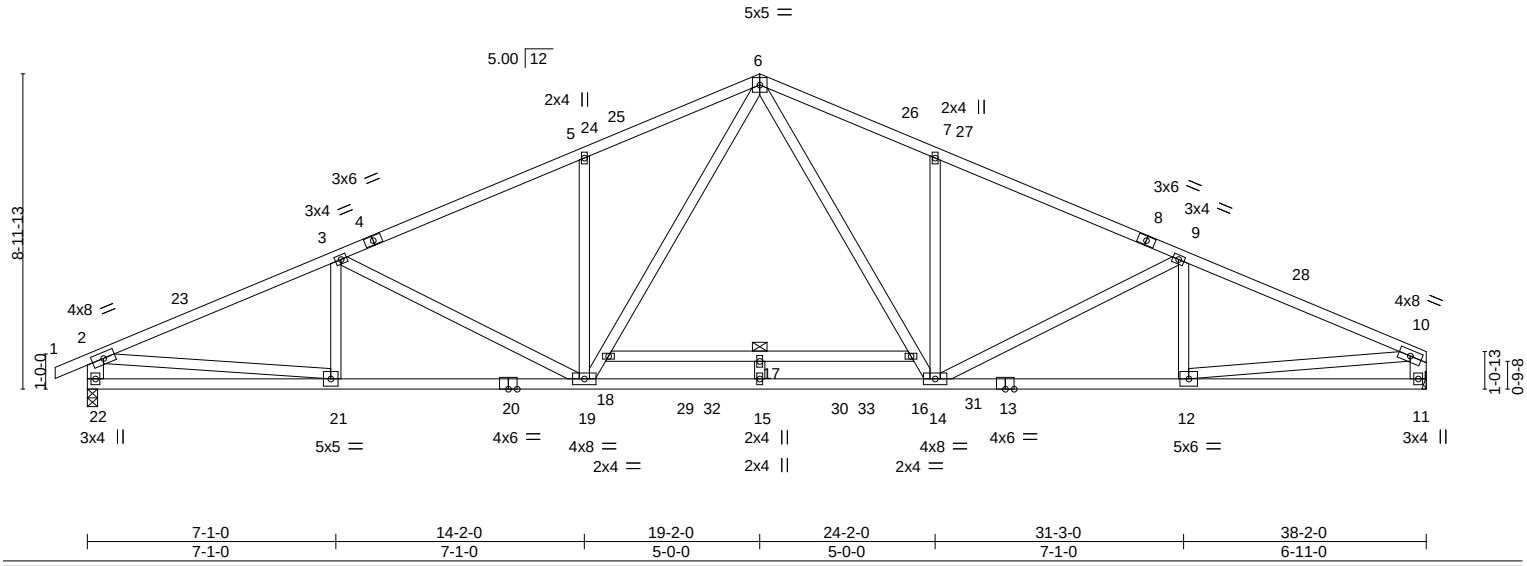

7-1-0	14-2-0	19-2-0	24-2-0	31-3-0	38-2-0
7-1-0	7-1-0	5-0-0	5-0-0	7-1-0	6-11-0

LOADING (psf)		**SPACING-** 2-0-0	**CSI.**		**DEFL.** in (loc) l/defl L/d	**PLATES**	**GRIP**
TCLL (roof)	20.0	Plate Grip DOL 1.15	TC	0.73	Vert(LL) -0.53 17 >860 240	MT20	244/190
Snow (Pf/Pg)	11.6/15.0	Lumber DOL 1.15	BC	0.90	Vert(CT) -0.92 17 >492 180		
TCDL	10.0	Rep Stress Incr YES	WB	0.64	Horz(CT) 0.10 11 n/a n/a		
BCLL	0.0 *	Code IRC2018/TPI2014	Matrix-MS			Weight: 236 lb	FT = 20%
BCDL	10.0						

LUMBER-
TOP CHORD 2x4 SP No.2
BOT CHORD 2x4 SP No.2 *Except*
13-20: 2x4 SP DSS
WEBS 2x4 SP No.3 *Except*
2-22,10-11: 2x6 SP No.2, 2-21,10-12: 2x4 SP No.2

BRACING-
TOP CHORD Structural wood sheathing directly applied or 2-2-0 oc purlins, except end verticals.
BOT CHORD Rigid ceiling directly applied or 10-0-0 oc bracing. Except:
6-0-0 oc bracing: 16-18

REACTIONS. (size) 22=0-3-8, 11=Mechanical
Max Horz 22=161(LC 15)
Max Uplift 22=-74(LC 16), 11=-37(LC 16)
Max Grav 22=1906(LC 28), 11=1847(LC 29)

FORCES. (lb) - Max. Comp./Max. Ten. - All forces 250 (lb) or less except when shown.
TOP CHORD 2-3=-3274/132, 3-5=-2993/130, 5-6=-2984/213, 6-7=-2970/210, 7-9=-2982/134, 9-10=-3217/140, 2-22=-1775/169, 10-11=-1719/119
BOT CHORD 21-22=-105/561, 19-21=-95/3050, 15-19=0/2111, 14-15=0/2111, 12-14=-92/2919, 11-12=-40/303
WEBS 3-19=-384/104, 5-19=-395/164, 18-19=-96/1143, 6-18=-48/1248, 6-16=-47/1224, 14-16=-94/1119, 7-14=-389/162, 9-14=-363/109, 2-21=-8/2534, 10-12=-52/2638

NOTES-
1) Unbalanced roof live loads have been considered for this design.
2) Wind: ASCE 7-16; Vult=130mph (3-second gust) Vasd=103mph; TCDL=6.0psf; BCDL=6.0psf; h=25ft; B=45ft; L=38ft; eave=5ft; Cat. II; Exp B; Enclosed; MWFRS (directional) and C-C Exterior(2E) -0-11-0 to 2-10-13, Interior(1) 2-10-13 to 19-2-0, Exterior(2R) 19-2-0 to 22-11-13, Interior(1) 22-11-13 to 37-11-4 zone; cantilever left and right exposed ; end vertical left and right exposed;C-C for members and forces & MWFRS for reactions shown; Lumber DOL=1.60 plate grip DOL=1.60
3) TCLL: ASCE 7-16; Pr=20.0 psf (roof LL: Lum DOL=1.15 Plate DOL=1.15); Pg=15.0 psf; Pf=11.6 psf (Lum DOL=1.15 Plate DOL=1.15); Is=1.0; Rough Cat B; Partially Exp.; Ce=1.0; Cs=1.00; Ct=1.10
4) Unbalanced snow loads have been considered for this design.
5) This truss has been designed for greater of min roof live load of 12.0 psf or 1.00 times flat roof load of 11.6 psf on overhangs non-concurrent with other live loads.
6) This truss has been designed for a 10.0 psf bottom chord live load nonconcurrent with any other live loads.
7) * This truss has been designed for a live load of 20.0psf on the bottom chord in all areas where a rectangle 3-6-0 tall by 2-0-0 wide will fit between the bottom chord and any other members, with BCDL = 10.0psf.
8) Refer to girder(s) for truss to truss connections.
9) Provide mechanical connection (by others) of truss to bearing plate capable of withstanding 100 lb uplift at joint(s) 22, 11.
10) This truss is designed in accordance with the 2018 International Residential Code sections R502.11.1 and R802.10.2 and referenced standard ANSI/TPI 1.

March 17,2025

WARNING - Verify design parameters and READ NOTES ON THIS AND INCLUDED MITEK REFERENCE PAGE MII-7473 rev. 1/2/2023 BEFORE USE.
Design valid for use only with MiTek® connectors. This design is based only upon parameters shown, and is for an individual building component, not a truss system. Before use, the building designer must verify the applicability of design parameters and properly incorporate this design into the overall building design. Bracing indicated is to prevent buckling of individual truss web and/or chord members only. Additional temporary and permanent bracing is always required for stability and to prevent collapse with possible personal injury and property damage. For general guidance regarding the fabrication, storage, delivery, erection and bracing of trusses and truss systems, see **ANSI/TPI1 Quality Criteria and DSB-22** available from Truss Plate Institute (www.tpinst.org) and **BCSI Building Component Safety Information** available from the Structural Building Component Association (www.sbcacomponents.com)

ENGINEERING BY TRENCO A MiTek Affiliate
818 Soundside Road
Edenton, NC 27932

Job	Truss	Truss Type	Qty	Ply	FFF-LOT #51 Roof
25-0542-A	T04GE	COMMON SUPPORTED GAB	1	1	I72048262 Job Reference (optional)

Riverside Roof Truss, LLC, Danville, Va - 24541, 8.730 s Feb 19 2025 MiTek Industries, Inc. Fri Mar 14 12:14:08 2025 Page 1

ID:BxI2MwYau_NHkbraGCmHIoyOvst-aR6ZsIp03k_xL7f5TTWAeH8kY_LHkWCqKdYqhQzb0oT

-0-11-0 19-2-0 38-4-0 39-3-0

0-11-0 19-2-0 19-2-0 0-11-0

Scale: 3/16"=1'

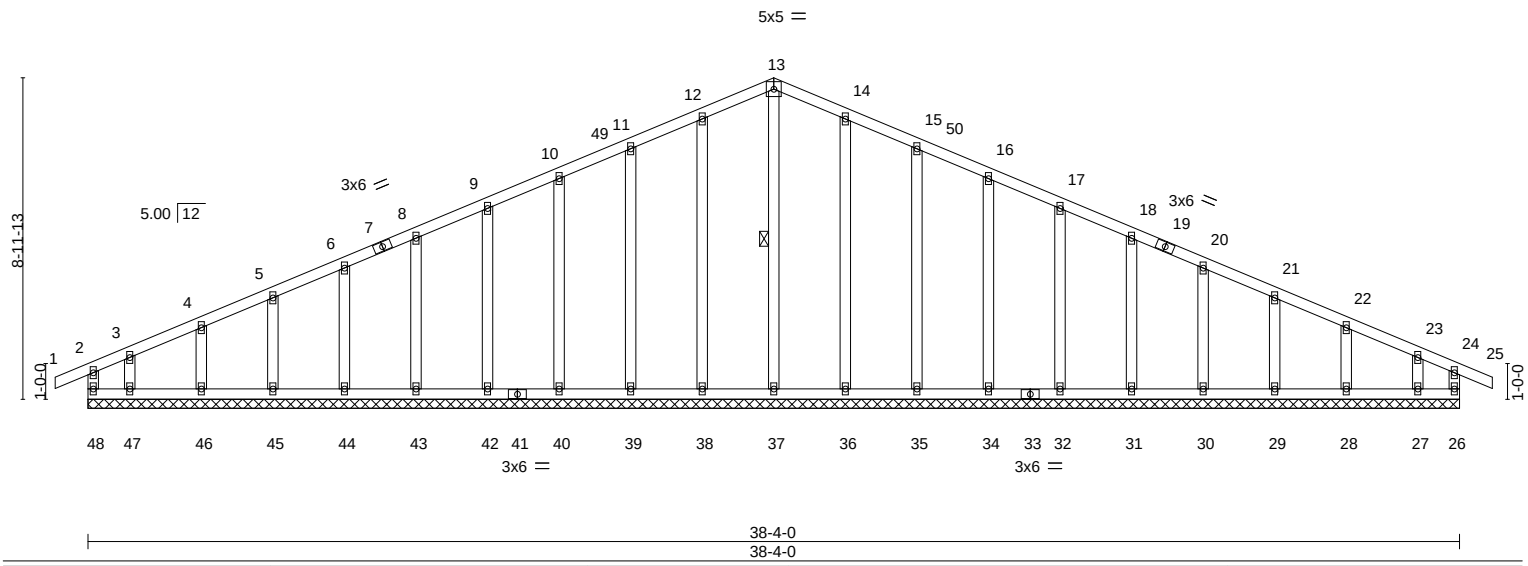

LOADING (psf)		SPACING-	2-0-0	CSI.		DEFL.	in	(loc)	l/defl	L/d	PLATES	GRIP
TCLL (roof)	20.0	Plate Grip DOL	1.15	TC	0.12	Vert(LL)	-0.00	25	n/r	120	MT20	244/190
Snow (Pf/Pg)	11.6/15.0	Lumber DOL	1.15	BC	0.06	Vert(CT)	-0.00	25	n/r	120		
TCDL	10.0	Rep Stress Incr	YES	WB	0.17	Horz(CT)	0.00	26	n/a	n/a		
BCLL	0.0 *	Code IRC2018/TPI2014		Matrix-R							Weight: 250 lb	FT = 20%
BCDL	10.0											

LUMBER-

TOP CHORD	2x4 SP No.2
BOT CHORD	2x4 SP No.2
WEBS	2x4 SP No.3
OTHERS	2x4 SP No.3

BRACING-

TOP CHORD	Structural wood sheathing directly applied or 6-0-0 oc purlins, except end verticals.
BOT CHORD	Rigid ceiling directly applied or 6-0-0 oc bracing.
WEBS	1 Row at midpt 13-37

REACTIONS. All bearings 38-4-0.

(lb) - Max Horz 48=159(LC 15)

Max Uplift All uplift 100 lb or less at joint(s) 48, 26, 38, 39, 40, 42, 43, 44, 45, 46, 47, 36, 35, 34, 32, 31, 30, 29, 28, 27

Max Grav All reactions 250 lb or less at joint(s) 48, 26, 37, 38, 39, 40, 42, 43, 44, 45, 46, 47, 36, 35, 34, 32, 31, 30, 29, 28, 27

FORCES. (lb) - Max. Comp./Max. Ten. - All forces 250 (lb) or less except when shown.

TOP CHORD 11-12=-96/258, 12-13=-110/292, 13-14=-110/292, 14-15=-96/258

NOTES-

1) Unbalanced roof live loads have been considered for this design.
2) Wind: ASCE 7-16; Vult=130mph (3-second gust) Vasd=103mph; TCDL=6.0psf; BCDL=6.0psf; h=25ft; B=45ft; L=38ft; eave=2ft; Cat. II; Exp B; Enclosed; MWFRS (directional) and C-C Corner(3E) -0-11-0 to 3-2-0, Exterior(2N) 3-2-0 to 19-2-0, Corner(3R) 19-2-0 to 23-2-0, Exterior(2N) 23-2-0 to 39-3-0 zone; cantilever left and right exposed ; end vertical left and right exposed;C-C for members and forces & MWFRS for reactions shown; Lumber DOL=1.60 plate grip DOL=1.60
3) Truss designed for wind loads in the plane of the truss only. For studs exposed to wind (normal to the face), see Standard Industry Gable End Details as applicable, or consult qualified building designer as per ANSI/TPI 1.
4) TCLL: ASCE 7-16; Pr=20.0 psf (roof LL: Lum DOL=1.15 Plate DOL=1.15); Pg=15.0 psf; Pf=11.6 psf (Lum DOL=1.15 Plate DOL=1.15); Is=1.0; Rough Cat B; Partially Exp.; Ce=1.0; Cs=1.00; Ct=1.10
5) Unbalanced snow loads have been considered for this design.
6) This truss has been designed for greater of min roof live load of 12.0 psf or 1.00 times flat roof load of 11.6 psf on overhangs non-concurrent with other live loads.
7) All plates are 2x4 MT20 unless otherwise indicated.
8) Gable requires continuous bottom chord bearing.
9) Truss to be fully sheathed from one face or securely braced against lateral movement (i.e. diagonal web).
10) Gable studs spaced at 2-0-0 oc.
11) This truss has been designed for a 10.0 psf bottom chord live load nonconcurrent with any other live loads.
12) * This truss has been designed for a live load of 20.0psf on the bottom chord in all areas where a rectangle 3-6-0 tall by 2-0-0 wide will fit between the bottom chord and any other members.
13) Provide mechanical connection (by others) of truss to bearing plate capable of withstanding 100 lb uplift at joint(s) 48, 26, 38, 39, 40, 42, 43, 44, 45, 46, 47, 36, 35, 34, 32, 31, 30, 29, 28, 27.
14) This truss is designed in accordance with the 2018 International Residential Code sections R502.11.1 and R802.10.2 and referenced standard ANSI/TPI 1.

March 17,2025

WARNING - Verify design parameters and READ NOTES ON THIS AND INCLUDED MITEK REFERENCE PAGE MII-7473 rev. 1/2/2023 BEFORE USE.
Design valid for use only with MiTek® connectors. This design is based only upon parameters shown, and is for an individual building component, not a truss system. Before use, the building designer must verify the applicability of design parameters and properly incorporate this design into the overall building design. Bracing indicated is to prevent buckling of individual truss web and/or chord members only. Additional temporary and permanent bracing is always required for stability and to prevent collapse with possible personal injury and property damage. For general guidance regarding the fabrication, storage, delivery, erection and bracing of trusses and truss systems, see **ANSI/TPI1 Quality Criteria and DSB-22** available from Truss Plate Institute (www.tpinst.org) and **BCSI Building Component Safety Information** available from the Structural Building Component Association (www.sbcacomponents.com)

ENGINEERING BY TRENCO A MiTek Affiliate
818 Soundside Road
Edenton, NC 27932

Job	Truss	Truss Type	Qty	Ply	FFF-LOT #51 Roof
25-0542-A	V01	Valley	1	1	I72048263 Job Reference (optional)

Riverside Roof Truss, LLC, Danville, Va - 24541, 8.730 s Feb 19 2025 MiTek Industries, Inc. Fri Mar 14 12:14:09 2025 Page 1
ID:BxI2MwYau_NHkbraGCmHIoyOvst-2dgy3eqeq16oyGEH1A1PBUgpjOdgT_n_ZHHNEszb0oS

10-10-4 | 21-8-8
10-10-4 | 10-10-4

Scale = 1:34.7

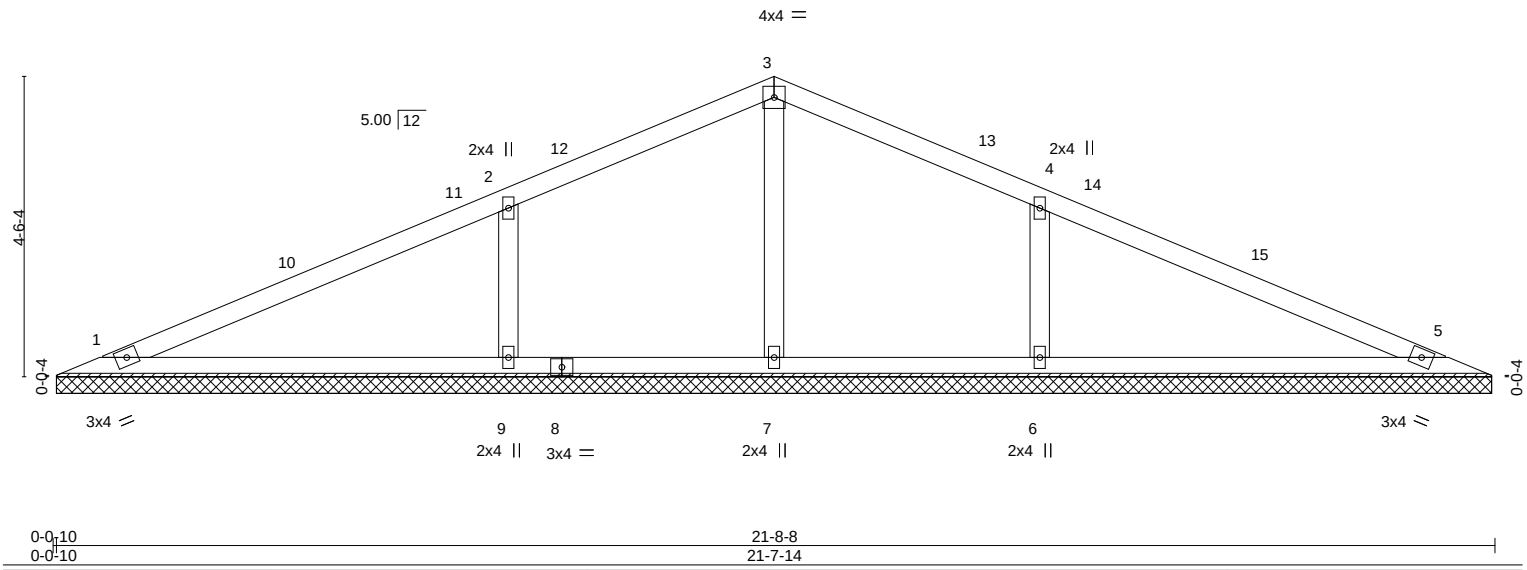

LOADING (psf)		SPACING-	2-0-0	CSI.		DEFL.	in	(loc)	l/defl	L/d	PLATES	GRIP
TCLL (roof)	20.0	Plate Grip DOL	1.15	TC	0.48	Vert(LL)	n/a	-	n/a	999	MT20	244/190
Snow (Pf/Pg)	11.6/15.0	Lumber DOL	1.15	BC	0.30	Vert(CT)	n/a	-	n/a	999		
TCDL	10.0	Rep Stress Incr	YES	WB	0.09	Horz(CT)	0.00	5	n/a	n/a		
BCLL	0.0 *	Code IRC2018/TPI2014		Matrix-S							Weight: 77 lb	FT = 20%
BCDL	10.0											

LUMBER-
TOP CHORD 2x4 SP No.2
BOT CHORD 2x4 SP No.2
OTHERS 2x4 SP No.3

BRACING-
TOP CHORD Structural wood sheathing directly applied or 6-0-0 oc purlins.
BOT CHORD Rigid ceiling directly applied or 10-0-0 oc bracing.

REACTIONS. All bearings 21-7-5.
(lb) - Max Horz 1=-54(LC 14)
Max Uplift All uplift 100 lb or less at joint(s) 1, 5, 9, 6
Max Grav All reactions 250 lb or less at joint(s) 1, 5, 7 except 9=520(LC 33), 6=520(LC 34)

FORCES. (lb) - Max. Comp./Max. Ten. - All forces 250 (lb) or less except when shown.
WEBS 2-9=-379/178, 4-6=-379/178

NOTES-
1) Unbalanced roof live loads have been considered for this design.
2) Wind: ASCE 7-16; Vult=130mph (3-second gust) Vasd=103mph; TCDL=6.0psf; BCDL=6.0psf; h=25ft; B=45ft; L=24ft; eave=4ft; Cat. II; Exp B; Enclosed; MWFRS (directional) and C-C Exterior(2E) 0-9-1 to 3-9-1, Interior(1) 3-9-1 to 10-10-4, Exterior(2R) 10-10-4 to 13-10-4, Interior(1) 13-10-4 to 20-11-7 zone; cantilever left and right exposed ; end vertical left and right exposed;C-C for members and forces & MWFRS for reactions shown; Lumber DOL=1.60 plate grip DOL=1.60
3) TCLL: ASCE 7-16; Pr=20.0 psf (roof LL: Lum DOL=1.15 Plate DOL=1.15); Pg=15.0 psf; Pf=11.6 psf (Lum DOL=1.15 Plate DOL=1.15); Is=1.0; Rough Cat B; Partially Exp.; Ce=1.0; Cs=1.00; Ct=1.10
4) Unbalanced snow loads have been considered for this design.
5) Gable requires continuous bottom chord bearing.
6) This truss has been designed for a 10.0 psf bottom chord live load nonconcurrent with any other live loads.
7) * This truss has been designed for a live load of 20.0psf on the bottom chord in all areas where a rectangle 3-6-0 tall by 2-0-0 wide will fit between the bottom chord and any other members.
8) Provide mechanical connection (by others) of truss to bearing plate capable of withstanding 100 lb uplift at joint(s) 1, 5, 9, 6.
9) This truss is designed in accordance with the 2018 International Residential Code sections R502.11.1 and R802.10.2 and referenced standard ANSI/TPI 1.

March 17,2025

WARNING - Verify design parameters and READ NOTES ON THIS AND INCLUDED MITEK REFERENCE PAGE MII-7473 rev. 1/2/2023 BEFORE USE.
Design valid for use only with MiTek® connectors. This design is based only upon parameters shown, and is for an individual building component, not a truss system. Before use, the building designer must verify the applicability of design parameters and properly incorporate this design into the overall building design. Bracing indicated is to prevent buckling of individual truss web and/or chord members only. Additional temporary and permanent bracing is always required for stability and to prevent collapse with possible personal injury and property damage. For general guidance regarding the fabrication, storage, delivery, erection and bracing of trusses and truss systems, see **ANSI/TPI1 Quality Criteria and DSB-22** available from Truss Plate Institute (www.tpinst.org) and **BCSI Building Component Safety Information** available from the Structural Building Component Association (www.sbcacomponents.com)

ENGINEERING BY TRENCO A MiTek Affiliate
818 Soundside Road
Edenton, NC 27932

Job	Truss	Truss Type	Qty	Ply	FFF-LOT #51 Roof
25-0542-A	V02	Valley	1	1	I72048264
					Job Reference (optional)

Riverside Roof Truss, LLC, Danville, Va - 24541, 8.730 s Feb 19 2025 MiTek Industries, Inc. Fri Mar 14 12:14:09 2025 Page 1
ID:BxI2MwYau_NHkbraGCmHIoyOvst-2dgy3eqeq16oyGEH1A1PBUgtNOfDT?B_ZHHNEszb0oS

8-10-4 | 17-8-8
8-10-4 | 8-10-4

Scale = 1:28.2

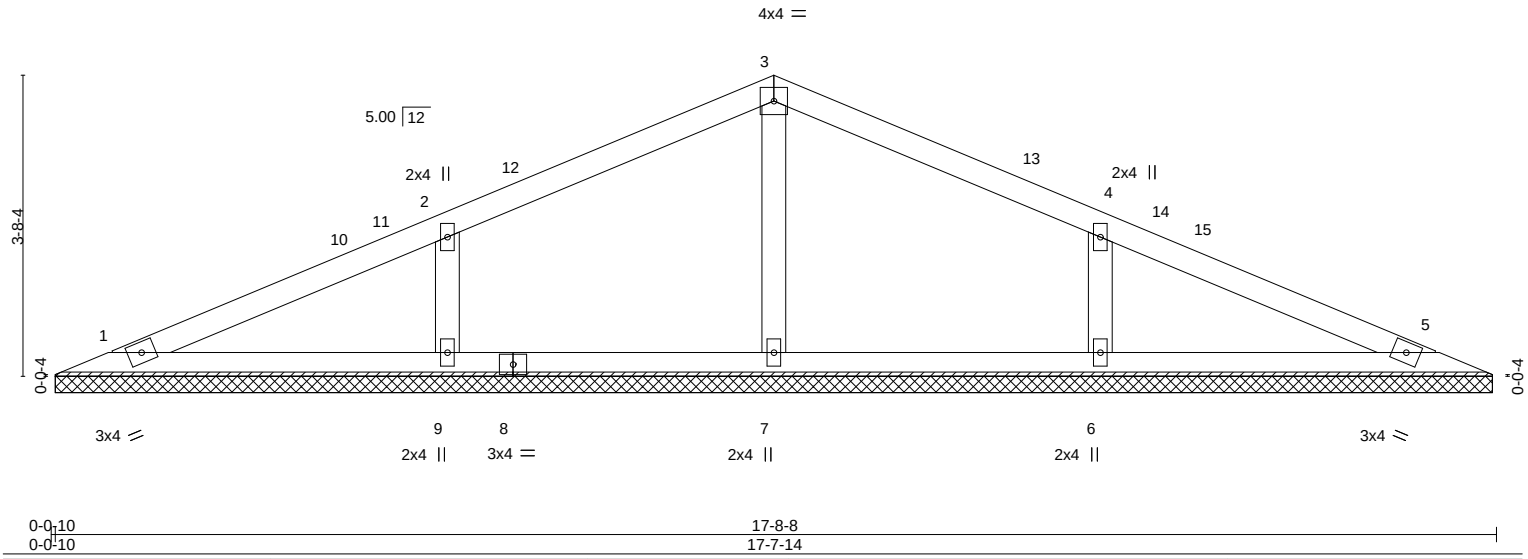

LOADING (psf)		SPACING-	2-0-0	CSI.		DEFL.	in	(loc)	l/defl	L/d	PLATES	GRIP
TCLL (roof)	20.0	Plate Grip DOL	1.15	TC	0.24	Vert(LL)	n/a	-	n/a	999	MT20	244/190
Snow (Pf/Pg)	11.6/15.0	Lumber DOL	1.15	BC	0.14	Vert(CT)	n/a	-	n/a	999		
TCDL	10.0	Rep Stress Incr	YES	WB	0.06	Horz(CT)	0.00	5	n/a	n/a		
BCLL	0.0 *	Code IRC2018/TPI2014		Matrix-S							Weight: 61 lb	FT = 20%
BCDL	10.0											

LUMBER-
TOP CHORD 2x4 SP No.2
BOT CHORD 2x4 SP No.2
OTHERS 2x4 SP No.3

BRACING-
TOP CHORD Structural wood sheathing directly applied or 6-0-0 oc purlins.
BOT CHORD Rigid ceiling directly applied or 10-0-0 oc bracing.

REACTIONS. All bearings 17-7-5.
(lb) - Max Horz 1=-43(LC 14)
Max Uplift All uplift 100 lb or less at joint(s) 1, 5, 9, 6
Max Grav All reactions 250 lb or less at joint(s) 1, 5 except 7=260(LC 2), 9=388(LC 33), 6=388(LC 34)

FORCES. (lb) - Max. Comp./Max. Ten. - All forces 250 (lb) or less except when shown.
WEBS 2-9=-289/160, 4-6=-289/160

NOTES-
1) Unbalanced roof live loads have been considered for this design.
2) Wind: ASCE 7-16; Vult=130mph (3-second gust) Vasd=103mph; TCDL=6.0psf; BCDL=6.0psf; h=25ft; B=45ft; L=24ft; eave=4ft; Cat. II; Exp B; Enclosed; MWFRS (directional) and C-C Exterior(2E) 0-9-1 to 3-9-1, Interior(1) 3-9-1 to 8-10-4, Exterior(2R) 8-10-4 to 11-10-4, Interior(1) 11-10-4 to 16-11-7 zone; cantilever left and right exposed ; end vertical left and right exposed;C-C for members and forces & MWFRS for reactions shown; Lumber DOL=1.60 plate grip DOL=1.60
3) TCLL: ASCE 7-16; Pr=20.0 psf (roof LL: Lum DOL=1.15 Plate DOL=1.15); Pg=15.0 psf; Pf=11.6 psf (Lum DOL=1.15 Plate DOL=1.15); Is=1.0; Rough Cat B; Partially Exp.; Ce=1.0; Cs=1.00; Ct=1.10
4) Unbalanced snow loads have been considered for this design.
5) Gable requires continuous bottom chord bearing.
6) This truss has been designed for a 10.0 psf bottom chord live load nonconcurrent with any other live loads.
7) * This truss has been designed for a live load of 20.0psf on the bottom chord in all areas where a rectangle 3-6-0 tall by 2-0-0 wide will fit between the bottom chord and any other members.
8) Provide mechanical connection (by others) of truss to bearing plate capable of withstanding 100 lb uplift at joint(s) 1, 5, 9, 6.
9) This truss is designed in accordance with the 2018 International Residential Code sections R502.11.1 and R802.10.2 and referenced standard ANSI/TPI 1.

NORTH CAROLINA PROFESSIONAL SEAL 036322 ENGINEER ERIC A. GILBERT

March 17,2025

WARNING - Verify design parameters and READ NOTES ON THIS AND INCLUDED MITEK REFERENCE PAGE MII-7473 rev. 1/2/2023 BEFORE USE.
Design valid for use only with MiTek® connectors. This design is based only upon parameters shown, and is for an individual building component, not a truss system. Before use, the building designer must verify the applicability of design parameters and properly incorporate this design into the overall building design. Bracing indicated is to prevent buckling of individual truss web and/or chord members only. Additional temporary and permanent bracing is always required for stability and to prevent collapse with possible personal injury and property damage. For general guidance regarding the fabrication, storage, delivery, erection and bracing of trusses and truss systems, see **ANSI/TPI1 Quality Criteria and DSB-22** available from Truss Plate Institute (www.tpinst.org) and **BCSI Building Component Safety Information** available from the Structural Building Component Association (www.sbcacomponents.com)

ENGINEERING BY TRENCO A MiTek Affiliate
818 Soundside Road
Edenton, NC 27932

Job	Truss	Truss Type	Qty	Ply	FFF-LOT #51 Roof
25-0542-A	V03	Valley	1	1	I72048265 Job Reference (optional)

Riverside Roof Truss, LLC, Danville, Va - 24541, 8.730 s Feb 19 2025 MiTek Industries, Inc. Fri Mar 14 12:14:10 2025 Page 1
ID:BxI2MwYau_NHkbraGCmHIoyOvst-WqEKG_qGbLEeaQpTbuYejiDyyoytCR37nx1wmIzb0oR

6-10-4 | 13-8-8
6-10-4 | 6-10-4

Scale = 1:21.8

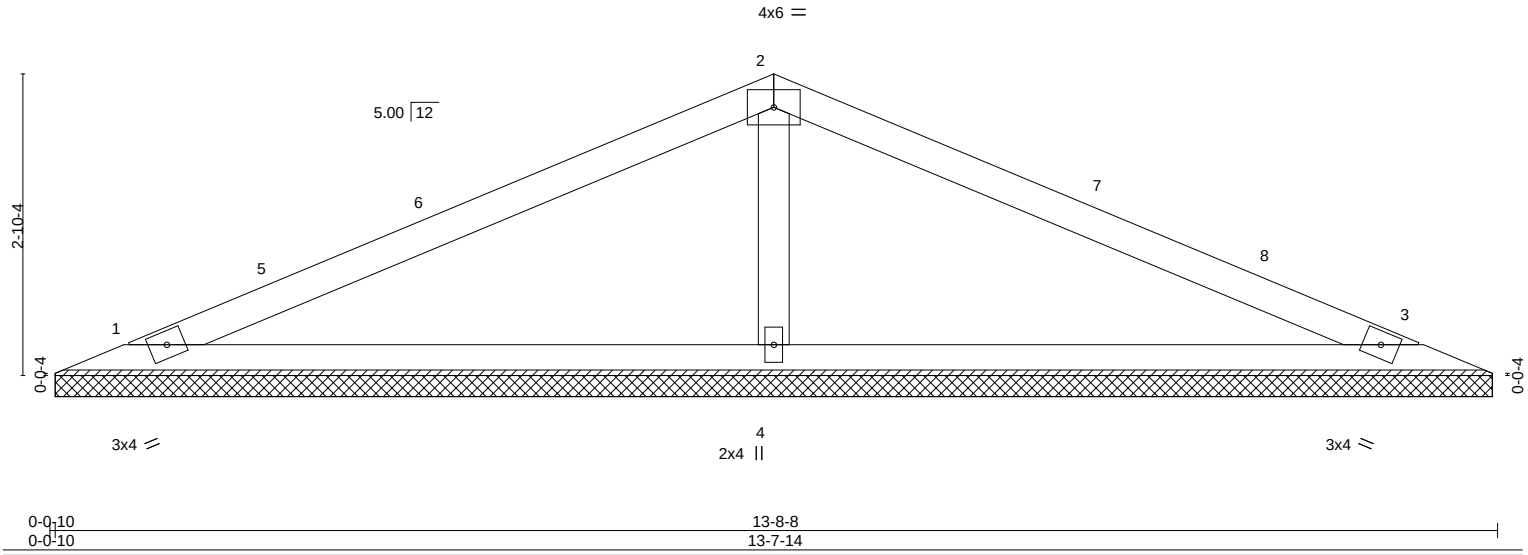

LOADING (psf)		SPACING-	2-0-0	CSI.		DEFL.	in	(loc)	l/defl	L/d	PLATES	GRIP
TCLL (roof)	20.0	Plate Grip DOL	1.15	TC	0.57	Vert(LL)	n/a	-	n/a	999	MT20	244/190
Snow (Pf/Pg)	11.6/15.0	Lumber DOL	1.15	BC	0.37	Vert(CT)	n/a	-	n/a	999		
TCDL	10.0	Rep Stress Incr	YES	WB	0.08	Horz(CT)	0.00	3	n/a	n/a		
BCLL	0.0 *	Code IRC2018/TPI2014		Matrix-S							Weight: 43 lb	FT = 20%
BCDL	10.0											

LUMBER-
TOP CHORD 2x4 SP No.2
BOT CHORD 2x4 SP No.2
OTHERS 2x4 SP No.3

BRACING-
TOP CHORD Structural wood sheathing directly applied or 6-0-0 oc purlins.
BOT CHORD Rigid ceiling directly applied or 10-0-0 oc bracing.

REACTIONS. (size) 1=13-7-5, 3=13-7-5, 4=13-7-5
Max Horz 1=-33(LC 14)
Max Uplift 1=-23(LC 16), 3=-23(LC 16), 4=-13(LC 16)
Max Grav 1=220(LC 33), 3=220(LC 34), 4=546(LC 2)

FORCES. (lb) - Max. Comp./Max. Ten. - All forces 250 (lb) or less except when shown.
WEBS 2-4=-368/188

NOTES-
1) Unbalanced roof live loads have been considered for this design.
2) Wind: ASCE 7-16; Vult=130mph (3-second gust) Vasd=103mph; TCDL=6.0psf; BCDL=6.0psf; h=25ft; B=45ft; L=24ft; eave=4ft; Cat. II; Exp B; Enclosed; MWFRS (directional) and C-C Exterior(2E) 0-9-1 to 3-9-1, Interior(1) 3-9-1 to 6-10-4, Exterior(2R) 6-10-4 to 9-10-4, Interior(1) 9-10-4 to 12-11-7 zone; cantilever left and right exposed ; end vertical left and right exposed;C-C for members and forces & MWFRS for reactions shown; Lumber DOL=1.60 plate grip DOL=1.60
3) TCLL: ASCE 7-16; Pr=20.0 psf (roof LL: Lum DOL=1.15 Plate DOL=1.15); Pg=15.0 psf; Pf=11.6 psf (Lum DOL=1.15 Plate DOL=1.15); Is=1.0; Rough Cat B; Partially Exp.; Ce=1.0; Cs=1.00; Ct=1.10
4) Unbalanced snow loads have been considered for this design.
5) Gable requires continuous bottom chord bearing.
6) This truss has been designed for a 10.0 psf bottom chord live load nonconcurrent with any other live loads.
7) * This truss has been designed for a live load of 20.0psf on the bottom chord in all areas where a rectangle 3-6-0 tall by 2-0-0 wide will fit between the bottom chord and any other members.
8) Provide mechanical connection (by others) of truss to bearing plate capable of withstanding 100 lb uplift at joint(s) 1, 3, 4.
9) This truss is designed in accordance with the 2018 International Residential Code sections R502.11.1 and R802.10.2 and referenced standard ANSI/TPI 1.

March 17,2025

WARNING - Verify design parameters and READ NOTES ON THIS AND INCLUDED MITEK REFERENCE PAGE MII-7473 rev. 1/2/2023 BEFORE USE.
Design valid for use only with MiTek® connectors. This design is based only upon parameters shown, and is for an individual building component, not a truss system. Before use, the building designer must verify the applicability of design parameters and properly incorporate this design into the overall building design. Bracing indicated is to prevent buckling of individual truss web and/or chord members only. Additional temporary and permanent bracing is always required for stability and to prevent collapse with possible personal injury and property damage. For general guidance regarding the fabrication, storage, delivery, erection and bracing of trusses and truss systems, see **ANSI/TPI1 Quality Criteria and DSB-22** available from Truss Plate Institute (www.tpinst.org) and **BCSI Building Component Safety Information** available from the Structural Building Component Association (www.sbcacomponents.com)

ENGINEERING BY TRENCO A MiTek Affiliate
818 Soundside Road
Edenton, NC 27932

Job	Truss	Truss Type	Qty	Ply	FFF-LOT #51 Roof
25-0542-A	V04	Valley	1	1	I72048266 Job Reference (optional)

Riverside Roof Truss, LLC, Danville, Va - 24541, 8.730 s Feb 19 2025 MiTek Industries, Inc. Fri Mar 14 12:14:10 2025 Page 1
ID:BxI2MwYau_NHkbraGCmHIoyOvst-WqEKG_qGbLEeaQpTbuYejiD1Ao?0CSa7nx1wmIzb0oR

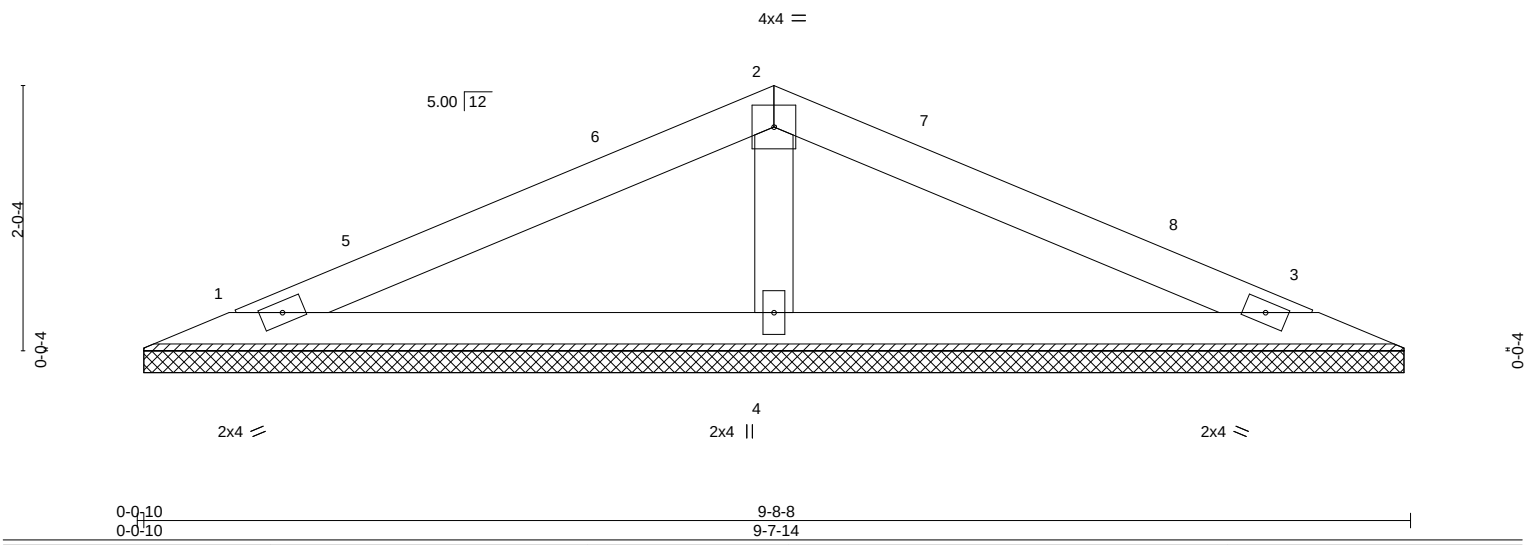

LOADING (psf)		SPACING-	2-0-0	CSI.		DEFL.	in	(loc)	l/defl	L/d	PLATES	GRIP
TCLL (roof)	20.0	Plate Grip DOL	1.15	TC	0.24	Vert(LL)	n/a	-	n/a	999	MT20	244/190
Snow (Pf/Pg)	11.6/15.0	Lumber DOL	1.15	BC	0.17	Vert(CT)	n/a	-	n/a	999		
TCDL	10.0	Rep Stress Incr	YES	WB	0.05	Horz(CT)	0.00	3	n/a	n/a		
BCLL	0.0 *	Code IRC2018/TPI2014		Matrix-S							Weight: 30 lb	FT = 20%
BCDL	10.0											

LUMBER-
TOP CHORD 2x4 SP No.2
BOT CHORD 2x4 SP No.2
OTHERS 2x4 SP No.3

BRACING-
TOP CHORD Structural wood sheathing directly applied or 6-0-0 oc purlins.
BOT CHORD Rigid ceiling directly applied or 10-0-0 oc bracing.

REACTIONS. (size) 1=9-7-5, 3=9-7-5, 4=9-7-5
Max Horz 1=-22(LC 14)
Max Uplift 1=-16(LC 16), 3=-16(LC 16), 4=-8(LC 16)
Max Grav 1=154(LC 20), 3=154(LC 21), 4=367(LC 2)

FORCES. (lb) - Max. Comp./Max. Ten. - All forces 250 (lb) or less except when shown.

NOTES-
1) Unbalanced roof live loads have been considered for this design.
2) Wind: ASCE 7-16; Vult=130mph (3-second gust) Vasd=103mph; TCDL=6.0psf; BCDL=6.0psf; h=25ft; B=45ft; L=24ft; eave=4ft; Cat. II; Exp B; Enclosed; MWFRS (directional) and C-C Exterior(2E) 0-9-1 to 3-9-1, Interior(1) 3-9-1 to 4-10-4, Exterior(2R) 4-10-4 to 7-10-4, Interior(1) 7-10-4 to 8-11-7 zone; cantilever left and right exposed ; end vertical left and right exposed;C-C for members and forces & MWFRS for reactions shown; Lumber DOL=1.60 plate grip DOL=1.60
3) TCLL: ASCE 7-16; Pr=20.0 psf (roof LL: Lum DOL=1.15 Plate DOL=1.15); Pg=15.0 psf; Pf=11.6 psf (Lum DOL=1.15 Plate DOL=1.15); Is=1.0; Rough Cat B; Partially Exp.; Ce=1.0; Cs=1.00; Ct=1.10
4) Unbalanced snow loads have been considered for this design.
5) Gable requires continuous bottom chord bearing.
6) This truss has been designed for a 10.0 psf bottom chord live load nonconcurrent with any other live loads.
7) * This truss has been designed for a live load of 20.0psf on the bottom chord in all areas where a rectangle 3-6-0 tall by 2-0-0 wide will fit between the bottom chord and any other members.
8) Provide mechanical connection (by others) of truss to bearing plate capable of withstanding 100 lb uplift at joint(s) 1, 3, 4.
9) This truss is designed in accordance with the 2018 International Residential Code sections R502.11.1 and R802.10.2 and referenced standard ANSI/TPI 1.

March 17,2025

WARNING - Verify design parameters and READ NOTES ON THIS AND INCLUDED MITEK REFERENCE PAGE MII-7473 rev. 1/2/2023 BEFORE USE.
Design valid for use only with MiTek® connectors. This design is based only upon parameters shown, and is for an individual building component, not a truss system. Before use, the building designer must verify the applicability of design parameters and properly incorporate this design into the overall building design. Bracing indicated is to prevent buckling of individual truss web and/or chord members only. Additional temporary and permanent bracing is always required for stability and to prevent collapse with possible personal injury and property damage. For general guidance regarding the fabrication, storage, delivery, erection and bracing of trusses and truss systems, see **ANSI/TPI1 Quality Criteria and DSB-22** available from Truss Plate Institute (www.tpinst.org) and **BCSI Building Component Safety Information** available from the Structural Building Component Association (www.sbcacomponents.com)

ENGINEERING BY TRENCO A MiTek Affiliate
818 Soundside Road
Edenton, NC 27932

Job	Truss	Truss Type	Qty	Ply	FFF-LOT #51 Roof
25-0542-A	V05	Valley	1	1	I72048267 Job Reference (optional)

Riverside Roof Truss, LLC, Danville, Va - 24541, 8.730 s Feb 19 2025 MiTek Industries, Inc. Fri Mar 14 12:14:11 2025 Page 1
ID:BxI2MwYau_NHkbraGCmHIoyOvst-_0oiUKruMfMVCaOg9b3tGvmEBCJMxvcH0bmUIkzb0oQ

2-10-4 | 5-8-8
2-10-4 | 2-10-4

Scale = 1:10.5

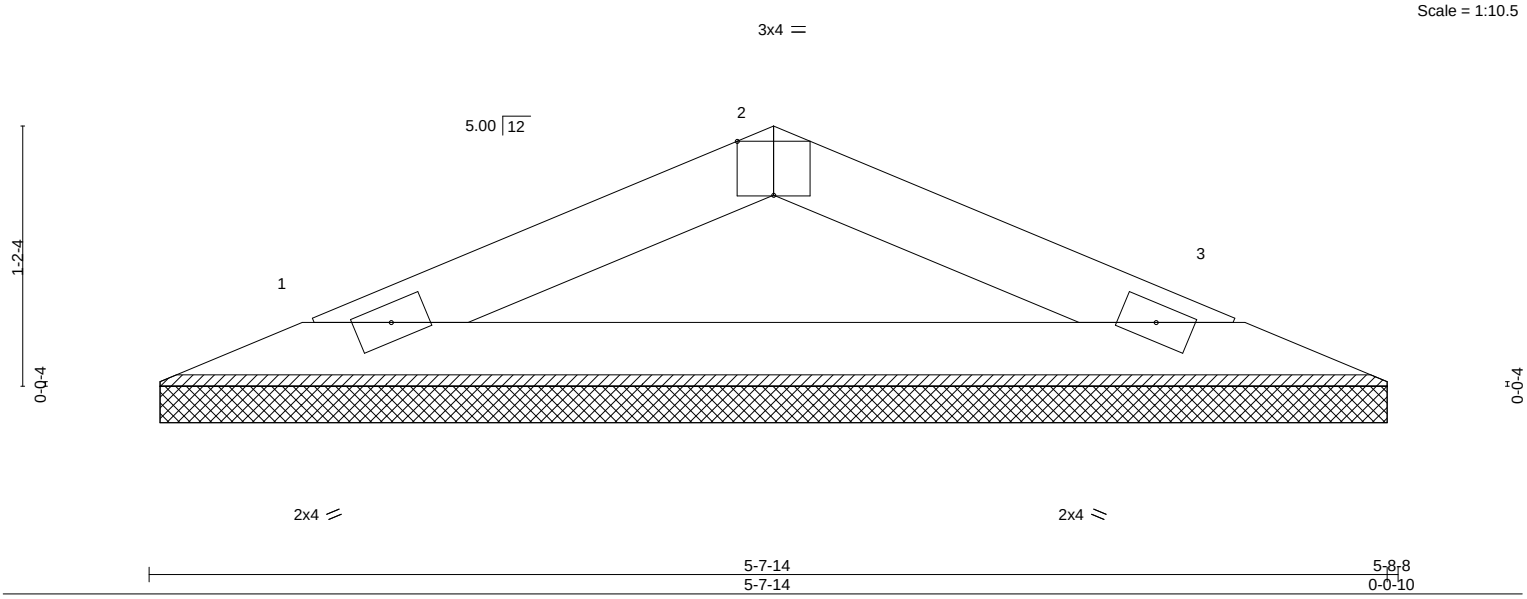

Plate Offsets (X,Y)-- [2:0-2-0,Edge]

LOADING (psf)		SPACING- 2-0-0	CSI.	DEFL. in (loc) l/defl L/d	PLATES GRIP
TCLL (roof)	20.0	Plate Grip DOL 1.15	TC 0.10	Vert(LL) n/a - n/a 999	MT20 244/190
Snow (Pf/Pg)	11.6/15.0	Lumber DOL 1.15	BC 0.22	Vert(CT) n/a - n/a 999	
TCDL	10.0	Rep Stress Incr YES	WB 0.00	Horz(CT) 0.00 3 n/a n/a	
BCLL	0.0 *	Code IRC2018/TPI2014	Matrix-P		Weight: 15 lb FT = 20%
BCDL	10.0				

LUMBER-
TOP CHORD 2x4 SP No.2
BOT CHORD 2x4 SP No.2

BRACING-
TOP CHORD Structural wood sheathing directly applied or 5-8-8 oc purlins.
BOT CHORD Rigid ceiling directly applied or 10-0-0 oc bracing.

REACTIONS. (size) 1=5-7-5, 3=5-7-5
Max Horz 1=-11(LC 14)
Max Uplift 1=-10(LC 16), 3=-10(LC 16)
Max Grav 1=168(LC 2), 3=168(LC 2)

FORCES. (lb) - Max. Comp./Max. Ten. - All forces 250 (lb) or less except when shown.

NOTES-
1) Unbalanced roof live loads have been considered for this design.
2) Wind: ASCE 7-16; Vult=130mph (3-second gust) Vasd=103mph; TCDL=6.0psf; BCDL=6.0psf; h=25ft; B=45ft; L=24ft; eave=4ft; Cat. II; Exp B; Enclosed; MWFRS (directional) and C-C Exterior(2E) zone; cantilever left and right exposed ; end vertical left and right exposed;C-C for members and forces & MWFRS for reactions shown; Lumber DOL=1.60 plate grip DOL=1.60
3) TCLL: ASCE 7-16; Pr=20.0 psf (roof LL: Lum DOL=1.15 Plate DOL=1.15); Pg=15.0 psf; Pf=11.6 psf (Lum DOL=1.15 Plate DOL=1.15); Is=1.0; Rough Cat B; Partially Exp.; Ce=1.0; Cs=1.00; Ct=1.10
4) Unbalanced snow loads have been considered for this design.
5) Gable requires continuous bottom chord bearing.
6) This truss has been designed for a 10.0 psf bottom chord live load nonconcurrent with any other live loads.
7) * This truss has been designed for a live load of 20.0psf on the bottom chord in all areas where a rectangle 3-6-0 tall by 2-0-0 wide will fit between the bottom chord and any other members.
8) Provide mechanical connection (by others) of truss to bearing plate capable of withstanding 100 lb uplift at joint(s) 1, 3.
9) This truss is designed in accordance with the 2018 International Residential Code sections R502.11.1 and R802.10.2 and referenced standard ANSI/TPI 1.

March 17,2025

WARNING - Verify design parameters and READ NOTES ON THIS AND INCLUDED MITEK REFERENCE PAGE MII-7473 rev. 1/2/2023 BEFORE USE.
Design valid for use only with MiTek® connectors. This design is based only upon parameters shown, and is for an individual building component, not a truss system. Before use, the building designer must verify the applicability of design parameters and properly incorporate this design into the overall building design. Bracing indicated is to prevent buckling of individual truss web and/or chord members only. Additional temporary and permanent bracing is always required for stability and to prevent collapse with possible personal injury and property damage. For general guidance regarding the fabrication, storage, delivery, erection and bracing of trusses and truss systems, see **ANSI/TPI1 Quality Criteria and DSB-22** available from Truss Plate Institute (www.tpinst.org) and **BCSI Building Component Safety Information** available from the Structural Building Component Association (www.sbcacomponents.com)

ENGINEERING BY TRENCO A MiTek Affiliate
818 Soundside Road
Edenton, NC 27932

Symbols

PLATE LOCATION AND ORIENTATION

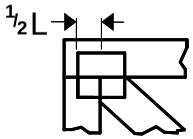

Center plate on joint unless x, y offsets are indicated. Dimensions are in ft-in-sixteenths. Apply plates to both sides of truss and fully embed teeth.

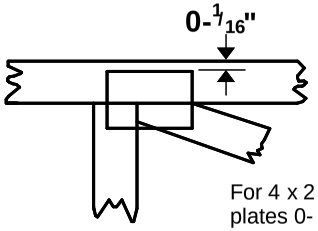

For 4 x 2 orientation, locate plates 0- 1/16" from outside edge of truss.

This symbol indicates the required direction of slots in connector plates.

* Plate location details available in MiTek software or upon request.

PLATE SIZE

4 x 4

The first dimension is the plate width measured perpendicular to slots. Second dimension is the length parallel to slots.

LATERAL BRACING LOCATION

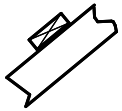

Indicated by symbol shown and/or by text in the bracing section of the output. Use T or I bracing if indicated.

BEARING

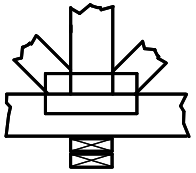

Indicates location where bearings (supports) occur. Icons vary but reaction section indicates joint number/letter where bearings occur. Min size shown is for crushing only.

Industry Standards:

ANSI/TPI1: National Design Specification for Metal Plate Connected Wood Truss Construction.
DSB-22: Design Standard for Bracing.
BCSI: Building Component Safety Information, Guide to Good Practice for Handling, Installing, Restraining & Bracing of Metal Plate Connected Wood Trusses.

Numbering System

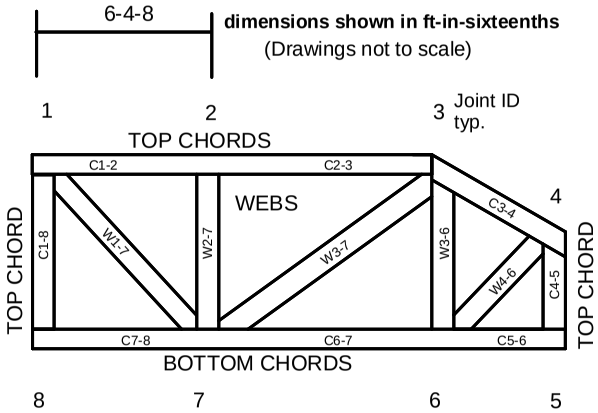

JOINTS ARE GENERALLY NUMBERED/LETTERED CLOCKWISE AROUND THE TRUSS STARTING AT THE JOINT FARTHEST TO THE LEFT.

CHORDS AND WEBS ARE IDENTIFIED BY END JOINT NUMBERS/LETTERS.

Product Code Approvals

ICC-ES Reports:

ESR-1988, ESR-2362, ESR-2685, ESR-3282
ESR-4722, ESL-1388

Design General Notes

Trusses are designed for wind loads in the plane of the truss unless otherwise shown.

Lumber design values are in accordance with ANSI/TPI 1 section 6.3 These truss designs rely on lumber values established by others.

© 2023 MiTek® All Rights Reserved

MiTek®

ENGINEERING BY TRENCO
A MiTek Affiliate

General Safety Notes

Failure to Follow Could Cause Property Damage or Personal Injury

1. Additional stability bracing for truss system, e.g. diagonal or X-bracing, is always required. See BCSI.
2. Truss bracing must be designed by an engineer. For wide truss spacing, individual lateral braces themselves may require bracing, or alternative Tor I bracing should be considered.
3. Never exceed the design loading shown and never stack materials on inadequately braced trusses.
4. Provide copies of this truss design to the building designer, erection supervisor, property owner and all other interested parties.
5. Cut members to bear tightly against each other.
6. Place plates on each face of truss at each joint and embed fully. Knots and wane at joint locations are regulated by ANSI/TPI 1.
7. Design assumes trusses will be suitably protected from the environment in accord with ANSI/TPI 1.
8. Unless otherwise noted, moisture content of lumber shall not exceed 19% at time of fabrication.
9. Unless expressly noted, this design is not applicable for use with fire retardant, preservative treated, or green lumber.
10. Camber is a non-structural consideration and is the responsibility of truss fabricator. General practice is to camber for dead load deflection.
11. Plate type, size, orientation and location dimensions indicated are minimum plating requirements.
12. Lumber used shall be of the species and size, and in all respects, equal to or better than that specified.
13. Top chords must be sheathed or purlins provided at spacing indicated on design.
14. Bottom chords require lateral bracing at 10 ft. spacing, or less, if no ceiling is installed, unless otherwise noted.
15. Connections not shown are the responsibility of others.
16. Do not cut or alter truss member or plate without prior approval of an engineer.
17. Install and load vertically unless indicated otherwise.
18. Use of green or treated lumber may pose unacceptable environmental, health or performance risks. Consult with project engineer before use.
19. Review all portions of this design (front, back, words and pictures) before use. Reviewing pictures alone is not sufficient.
20. Design assumes manufacture in accordance with ANSI/TPI 1 Quality Criteria.
21. The design does not take into account any dynamic or other loads other than those expressly stated.