ENGINEERING BY TRENCO
A MiTek Affiliate

RE: J0125-0179
Lot 71 Magnolia Hills

Trenco
818 Soundside Rd
Edenton, NC 27932

Site Information:

Customer: Project Name: J0125-0179
Lot/Block: Model:
Address: Subdivision:
City: State:

General Truss Engineering Criteria & Design Loads (Individual Truss Design Drawings Show Special Loading Conditions):

Design Code: IRC2015/TPI2014 Design Program: MiTek 20/20 8.4
Wind Code: ASCE 7-10 Wind Speed: 130 mph
Roof Load: 40.0 psf Floor Load: N/A psf

This package includes 42 individual, dated Truss Design Drawings and 0 Additional Drawings.

No.	Seal#	Truss Name	Date	No.	Seal#	Truss Name	Date
1	I67090935	A1-GE	7/26/2024	21	I67090955	G1-GE	7/26/2024
2	I67090936	A2	7/26/2024	22	I67090956	G2	7/26/2024
3	I67090937	A3	7/26/2024	23	I67090957	G3	7/26/2024
4	I67090938	A4	7/26/2024	24	I67090958	G5	7/26/2024
5	I67090939	A4-A	7/26/2024	25	I67090959	G6	7/26/2024
6	I67090940	A5	7/26/2024	26	I67090960	G7-GE	7/26/2024
7	I67090941	A6	7/26/2024	27	I67090961	H1	7/26/2024
8	I67090942	A7	7/26/2024	28	I67090962	K1	7/26/2024
9	I67090943	A8	7/26/2024	29	I67090963	M1	7/26/2024
10	I67090944	A9	7/26/2024	30	I67090964	M2	7/26/2024
11	I67090945	B1-GE	7/26/2024	31	I67090965	M3	7/26/2024
12	I67090946	B2	7/26/2024	32	I67090966	P1	7/26/2024
13	I67090947	B3	7/26/2024	33	I67090967	VA1	7/26/2024
14	I67090948	B4	7/26/2024	34	I67090968	VA2	7/26/2024
15	I67090949	C1-GE	7/26/2024	35	I67090969	VA3	7/26/2024
16	I67090950	C2	7/26/2024	36	I67090970	VA4	7/26/2024
17	I67090951	C3	7/26/2024	37	I67090971	VB1	7/26/2024
18	I67090952	D1-GE	7/26/2024	38	I67090972	VC1	7/26/2024
19	I67090953	D2	7/26/2024	39	I67090973	XH1	7/26/2024
20	I67090954	D3	7/26/2024	40	I67090974	YH1	7/26/2024

The truss drawing(s) referenced above have been prepared by
Truss Engineering Co. under my direct supervision
based on the parameters provided by Comtech, Inc - Fayetteville.

Truss Design Engineer's Name: Gilbert, Eric

My license renewal date for the state of North Carolina is December 31, 2025.

North Carolina COA: C-0844

IMPORTANT NOTE: The seal on these truss component designs is a certification that the engineer named is licensed in the jurisdiction(s) identified and that the designs comply with ANSI/TPI 1. These designs are based upon parameters shown (e.g., loads, supports, dimensions, shapes and design codes), which were given to TRENCO. Any project specific information included is for TRENCO customers file reference purpose only, and was not taken into account in the preparation of these designs. TRENCO has not independently verified the applicability of the design parameters or the designs for any particular building. Before use, the building designer should verify applicability of design parameters and properly incorporate these designs into the overall building design per ANSI/TPI 1, Chapter 2.

NORTH CAROLINA PROFESSIONAL SEAL 038322 ENGINEER ERIC A. GILBERT

July 26, 2024

Gilbert, Eric

ENGINEERING BY TRENCO
A MiTek Affiliate

Trenco
818 Soundside Rd
Edenton, NC 27932

RE: J0125-0179 - Lot 71 Magnolia Hills

Site Information:

Project Customer: Project Name: J0125-0179
Lot/Block: Subdivision:
Address:
City, County: State:

No.	Seal#	Truss Name	Date
41	I67090975	YH2	7/26/2024
42	I67090976	ZH1	7/26/2024

Job	Truss	Truss Type	Qty	Ply	Lot 71 Magnolia Hills
J0125-0179	A1-GE	GABLE	1	1	I67090935 Job Reference (optional)

Comtech, Inc, Fayetteville, NC - 28314, 8.630 s Jul 12 2024 MiTek Industries, Inc. Wed Jul 24 14:09:22 2024 Page 1
ID:d9Okus??o?Oqeo9B6tqaBuzGAgg-RfC?PsB70Hq3NSgPqnL8w3uITXbGKWrCDoi7J4zJC?f

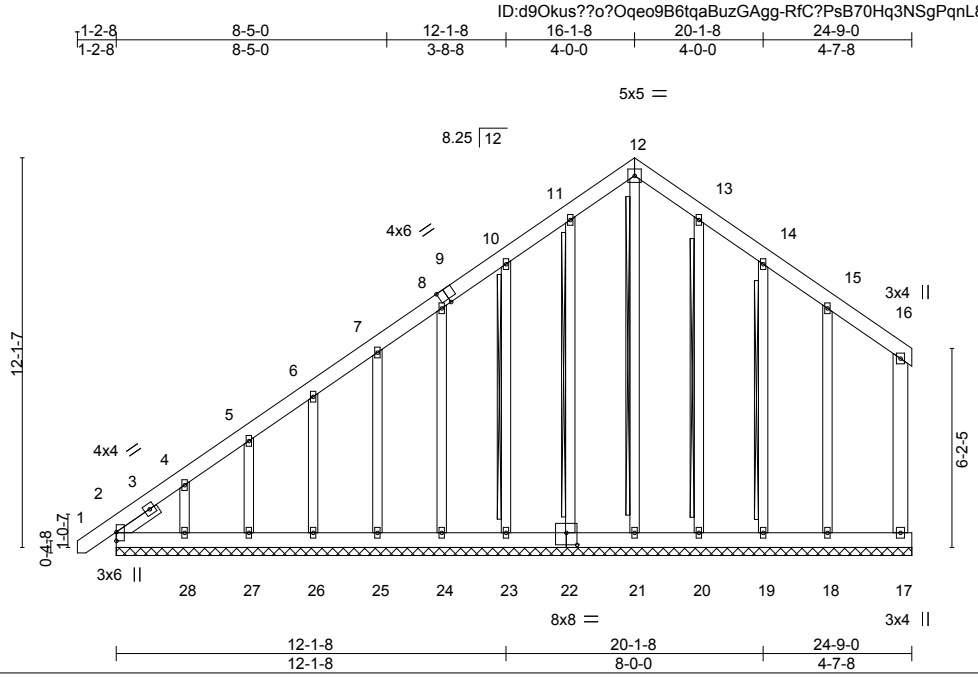

Plate Offsets (X,Y)-- [9:0-2-14,Edge], [22:0-4-0,0-4-8]

LOADING (psf)		SPACING- 2-0-0		CSI.		DEFL. in (loc) l/defl L/d				PLATES	GRIP
TCLL	20.0	Plate Grip DOL	1.15	TC	0.06	Vert(LL) -0.00 1 n/r 120				MT20	244/190
TCDL	10.0	Lumber DOL	1.15	BC	0.02	Vert(CT) -0.00 1 n/r 120					
BCLL	0.0 *	Rep Stress Incr	YES	WB	0.16	Horz(CT) 0.00 17 n/a n/a					
BCDL	10.0	Code IRC2015/TPI2014		Matrix-S						Weight: 262 lb	FT = 20%

LUMBER-

TOP CHORD	2x6 SP No.1
BOT CHORD	2x6 SP No.1
WEBS	2x6 SP No.1
OTHERS	2x4 SP No.2
SLIDER	Left 2x4 SP No.2 1-6-4

BRACING-

TOP CHORD Structural wood sheathing directly applied or 6-0-0 oc purlins, except end verticals.

BOT CHORD Rigid ceiling directly applied or 6-0-0 oc bracing.

WEBS T-Brace: 2x4 SPF No.2 - 12-21, 11-22, 10-23, 13-20 , 14-19

Fasten (2X) T and I braces to narrow edge of web with 10d (0.131"x3") nails, 6in o.c.,with 3in minimum end distance. Brace must cover 90% of web length.

REACTIONS. All bearings 24-9-0.

(lb) - Max Horz 2=401(LC 12)

Max Uplift All uplift 100 lb or less at joint(s) 17, 21, 22, 24, 25, 26, 27, 20 except 2=-158(LC 8), 23=-102(LC 12), 28=-218(LC 12), 19=-105(LC 13), 18=-110(LC 13)

Max Grav All reactions 250 lb or less at joint(s) 17, 21, 22, 23, 24, 25, 26, 27, 28, 20, 19, 18 except 2=283(LC 12)

FORCES. (lb) - Max. Comp./Max. Ten. - All forces 250 (lb) or less except when shown.

TOP CHORD 2-4=-471/349, 4-5=-325/278, 5-6=-274/255, 10-11=-180/268, 11-12=-219/286, 12-13=-220/270

NOTES-

1) Unbalanced roof live loads have been considered for this design.
2) Wind: ASCE 7-10; Vult=130mph Vasd=103mph; TCDL=6.0psf; BCDL=6.0psf; h=15ft; Cat. II; Exp C; Enclosed; MWFRS (envelope) gable end zone and C-C Exterior(2) zone;C-C for members and forces & MWFRS for reactions shown; Lumber DOL=1.60 plate grip DOL=1.60
3) Truss designed for wind loads in the plane of the truss only. For studs exposed to wind (normal to the face), see Standard Industry Gable End Details as applicable, or consult qualified building designer as per ANSI/TPI 1.
4) All plates are 2x4 MT20 unless otherwise indicated.
5) Gable requires continuous bottom chord bearing.
6) Gable studs spaced at 2-0-0 oc.
7) This truss has been designed for a 10.0 psf bottom chord live load nonconcurrent with any other live loads.
8) * This truss has been designed for a live load of 30.0psf on the bottom chord in all areas where a rectangle 3-6-0 tall by 2-0-0 wide will fit between the bottom chord and any other members.
9) Provide mechanical connection (by others) of truss to bearing plate capable of withstanding 100 lb uplift at joint(s) 17, 21, 22, 24, 25, 26, 27, 20 except (jt=lb) 2=158, 23=102, 28=218, 19=105, 18=110.
10) Warning: Additional permanent and stability bracing for truss system (not part of this component design) is always required.

July 26,2024

WARNING - Verify design parameters and READ NOTES ON THIS AND INCLUDED MITEK REFERENCE PAGE MII-7473 rev. 1/2/2023 BEFORE USE.
Design valid for use only with MiTek® connectors. This design is based only upon parameters shown, and is for an individual building component, not a truss system. Before use, the building designer must verify the applicability of design parameters and properly incorporate this design into the overall building design. Bracing indicated is to prevent buckling of individual truss web and/or chord members only. Additional temporary and permanent bracing is always required for stability and to prevent collapse with possible personal injury and property damage. For general guidance regarding the fabrication, storage, delivery, erection and bracing of trusses and truss systems, see **ANSI/TPI1 Quality Criteria and DSB-22** available from Truss Plate Institute (www.tpinst.org) and **BCSI Building Component Safety Information** available from the Structural Building Component Association (www.sbcacomponents.com)

ENGINEERING BY TRENCO A MiTek Affiliate
818 Soundside Road
Edenton, NC 27932

Job	Truss	Truss Type	Qty	Ply	Lot 71 Magnolia Hills
J0125-0179	A2	COMMON	6	1	I67090936 Job Reference (optional)

Comtech, Inc, Fayetteville, NC - 28314, 8.630 s Jul 12 2024 MiTek Industries, Inc. Wed Jul 24 14:09:22 2024 Page 1
ID:d9Okus??o?Oqeo9B6tqaBuzGAgg-RfC?PsB70Hq3NSgPqnL8w3uITXbGKWrCDoi7J4zJC?f

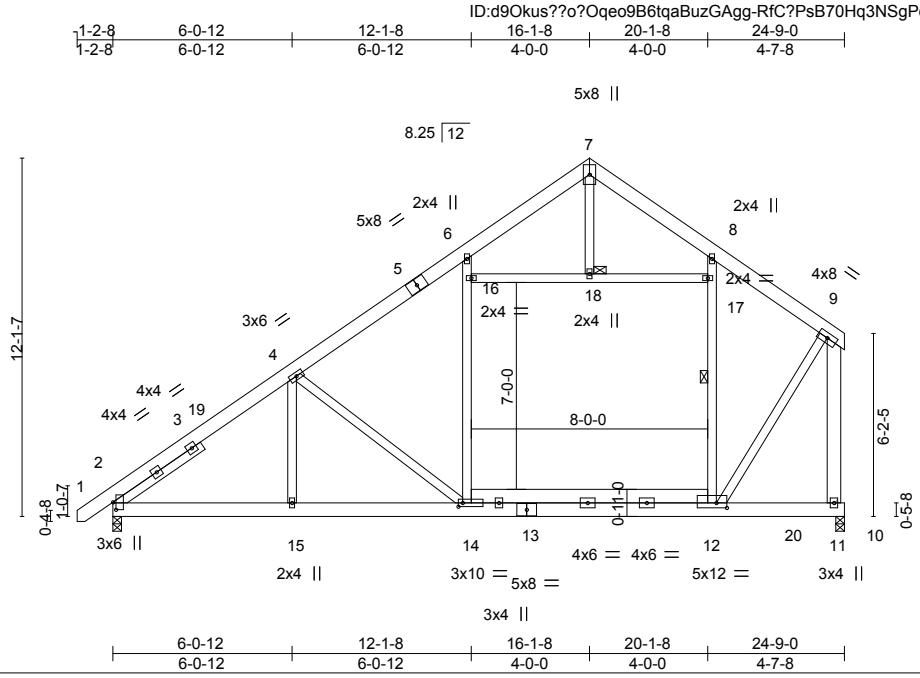

Plate Offsets (X,Y)-- [2:0-3-0,0-1-4], [12:0-4-4,0-2-0], [14:0-1-12,0-1-8]

LOADING (psf)		SPACING- 2-0-0		CSI.		DEFL.	in	(loc)	l/defl	L/d	PLATES	GRIP
TCLL	20.0	Plate Grip DOL	1.15	TC	0.53	Vert(LL)	-0.26	14-15	>999	360	MT20	244/190
TCDL	10.0	Lumber DOL	1.15	BC	0.80	Vert(CT)	-0.50	14-15	>590	240		
BCLL	0.0 *	Rep Stress Incr	YES	WB	0.76	Horz(CT)	0.01	11	n/a	n/a		
BCDL	10.0	Code IRC2015/TPI2014		Matrix-S		Wind(LL)	0.26	14-15	>999	240	Weight: 238 lb	FT = 20%

LUMBER-

TOP CHORD	2x6 SP No.1
BOT CHORD	2x6 SP No.1
WEBS	2x4 SP No.2 *Except* 9-11: 2x6 SP No.1
SLIDER	Left 2x4 SP No.2 3-7-4

BRACING-

TOP CHORD	Structural wood sheathing directly applied or 6-0-0 oc purlins, except end verticals.
BOT CHORD	Rigid ceiling directly applied or 10-0-0 oc bracing, Except: 6-0-0 oc bracing: 11-12.
WEBS	1 Row at midpt 8-12
JOINTS	1 Brace at Jt(s): 18

REACTIONS. (size) 2=0-3-8, 11=0-3-8
Max Horz 2=275(LC 9)
Max Uplift 2=-55(LC 12), 11=-66(LC 12)
Max Grav 2=1119(LC 19), 11=1266(LC 19)

FORCES. (lb) - Max. Comp./Max. Ten. - All forces 250 (lb) or less except when shown.

TOP CHORD	2-4=-1523/250, 4-6=-977/214, 6-7=-470/198, 7-8=-585/227, 8-9=-869/205, 9-11=-1502/300
BOT CHORD	2-15=-308/1309, 14-15=-308/1309, 12-14=-117/745
WEBS	14-16=0/360, 6-16=0/333, 9-12=-162/1229, 4-14=-801/272, 4-15=0/390, 16-18=-252/92, 17-18=-252/92

NOTES-

1) Unbalanced roof live loads have been considered for this design.
2) Wind: ASCE 7-10; Vult=130mph Vasd=103mph; TCDL=6.0psf; BCDL=6.0psf; h=15ft; Cat. II; Exp C; Enclosed; MWFRS (envelope) and C-C Exterior(2) -1-0-15 to 3-3-14, Interior(1) 3-3-14 to 16-1-8, Exterior(2) 16-1-8 to 20-3-4, Interior(1) 20-3-4 to 24-4-12 zone;C-C for members and forces & MWFRS for reactions shown; Lumber DOL=1.60 plate grip DOL=1.60
3) This truss has been designed for a 10.0 psf bottom chord live load nonconcurrent with any other live loads.
4) * This truss has been designed for a live load of 30.0psf on the bottom chord in all areas where a rectangle 3-6-0 tall by 2-0-0 wide will fit between the bottom chord and any other members, with BCDL = 10.0psf.
5) Provide mechanical connection (by others) of truss to bearing plate capable of withstanding 100 lb uplift at joint(s) 2, 11.

NORTH CAROLINA PROFESSIONAL SEAL 036322 ENGINEER ERIC A. GILBERT

July 26,2024

WARNING - Verify design parameters and READ NOTES ON THIS AND INCLUDED MITEK REFERENCE PAGE MII-7473 rev. 1/2/2023 BEFORE USE.
Design valid for use only with MiTek® connectors. This design is based only upon parameters shown, and is for an individual building component, not a truss system. Before use, the building designer must verify the applicability of design parameters and properly incorporate this design into the overall building design. Bracing indicated is to prevent buckling of individual truss web and/or chord members only. Additional temporary and permanent bracing is always required for stability and to prevent collapse with possible personal injury and property damage. For general guidance regarding the fabrication, storage, delivery, erection and bracing of trusses and truss systems, see **ANSI/TPI1 Quality Criteria and DSB-22** available from Truss Plate Institute (www.tpinst.org) and **BCSI Building Component Safety Information** available from the Structural Building Component Association (www.sbcacomponents.com)

ENGINEERING BY TRENCO A MiTek Affiliate
818 Soundside Road
Edenton, NC 27932

Job	Truss	Truss Type	Qty	Ply	Lot 71 Magnolia Hills
J0125-0179	A3	ROOF SPECIAL	1	1	I67090937 Job Reference (optional)

Comtech, Inc, Fayetteville, NC - 28314, 8.630 s Jul 12 2024 MiTek Industries, Inc. Wed Jul 24 14:09:23 2024 Page 1
ID:d9Okus??o?Oqeo9B6tqaBuzGAgg-RfC?PsB70Hq3NSgPqnL8w3uITXbGKWrCDoi7J4zJC?f

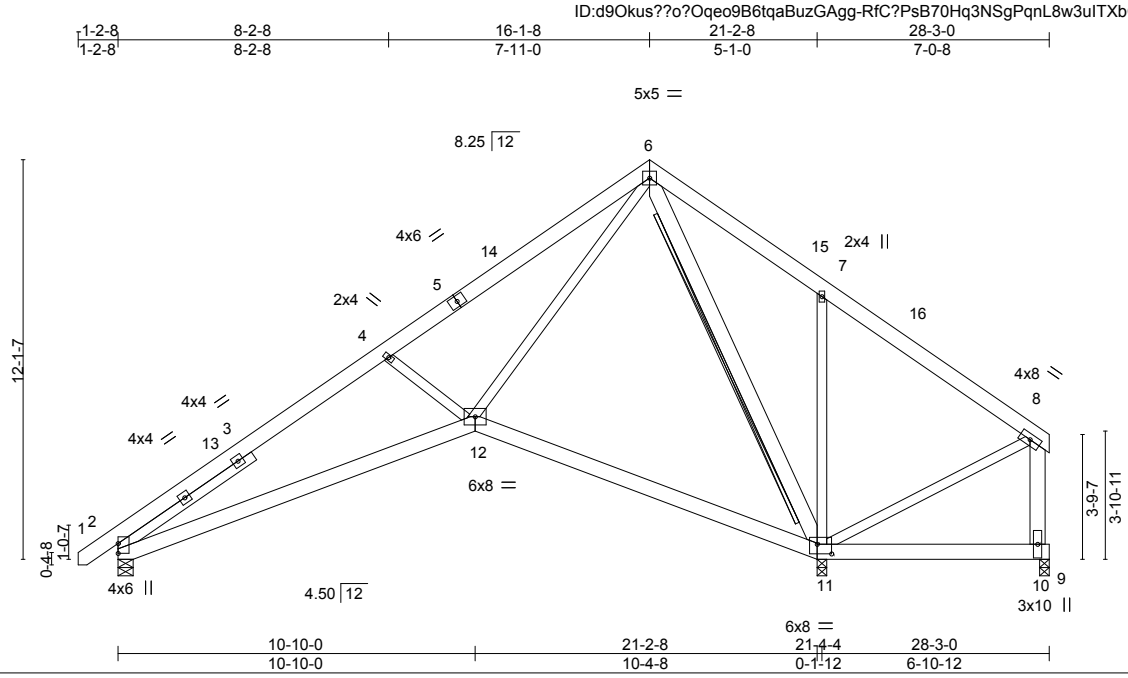

Plate Offsets (X,Y)-- [11:0-5-4,0-3-8]

LOADING (psf)		SPACING-	2-0-0	CSI.		DEFL.	in	(loc)	l/defl	L/d	PLATES	GRIP
TCLL	20.0	Plate Grip DOL	1.15	TC	0.25	Vert(LL)	-0.10	2-12	>999	360	MT20	244/190
TCDL	10.0	Lumber DOL	1.15	BC	0.35	Vert(CT)	-0.22	2-12	>999	240		
BCLL	0.0 *	Rep Stress Incr	YES	WB	0.81	Horz(CT)	0.06	10	n/a	n/a		
BCDL	10.0	Code IRC2015/TPI2014		Matrix-S		Wind(LL)	0.03	2-12	>999	240	Weight: 238 lb	FT = 20%

LUMBER-

TOP CHORD	2x6 SP No.1
BOT CHORD	2x6 SP No.1
WEBS	2x4 SP No.2 *Except* 6-11,8-10: 2x6 SP No.1
SLIDER	Left 2x4 SP No.2 4-11-15

BRACING-

TOP CHORD	Structural wood sheathing directly applied or 6-0-0 oc purlins, except end verticals.
BOT CHORD	Rigid ceiling directly applied or 10-0-0 oc bracing, Except: 6-0-0 oc bracing: 11-12.
WEBS	T-Brace: 2x4 SPF No.2 - 6-11 Fasten (2X) T and I braces to narrow edge of web with 10d (0.131"x3") nails, 6in o.c.,with 3in minimum end distance. Brace must cover 90% of web length.

REACTIONS. (size) 2=0-5-8, 11=0-3-8, 10=0-3-8
Max Horz 2=279(LC 9)
Max Uplift 2=-29(LC 12), 11=-183(LC 12), 10=-489(LC 23)
Max Grav 2=717(LC 1), 11=1985(LC 1), 10=102(LC 12)

FORCES. (lb) - Max. Comp./Max. Ten. - All forces 250 (lb) or less except when shown.
TOP CHORD 2-4=-1176/300, 4-6=-825/255, 6-7=-45/746, 7-8=-110/742, 8-10=-65/547
BOT CHORD 2-12=-291/1107
WEBS 4-12=-535/332, 6-12=-140/1066, 6-11=-1329/118, 7-11=-487/297, 8-11=-661/205

NOTES-
1) Unbalanced roof live loads have been considered for this design.
2) Wind: ASCE 7-10; Vult=130mph Vasd=103mph; TCDL=6.0psf; BCDL=6.0psf; h=15ft; Cat. II; Exp C; Enclosed; MWFRS (envelope) and C-C Exterior(2) -1-0-15 to 3-3-14, Interior(1) 3-3-14 to 16-1-8, Exterior(2) 16-1-8 to 20-6-5, Interior(1) 20-6-5 to 27-10-12 zone;C-C for members and forces & MWFRS for reactions shown; Lumber DOL=1.60 plate grip DOL=1.60
3) This truss has been designed for a 10.0 psf bottom chord live load nonconcurrent with any other live loads.
4) * This truss has been designed for a live load of 30.0psf on the bottom chord in all areas where a rectangle 3-6-0 tall by 2-0-0 wide will fit between the bottom chord and any other members.
5) Bearing at joint(s) 2 considers parallel to grain value using ANSI/TPI 1 angle to grain formula. Building designer should verify capacity of bearing surface.
6) Provide mechanical connection (by others) of truss to bearing plate capable of withstanding 100 lb uplift at joint(s) 2 except (jt=lb) 11=183, 10=489.
7) Warning: Additional permanent and stability bracing for truss system (not part of this component design) is always required.

July 26,2024

WARNING - Verify design parameters and READ NOTES ON THIS AND INCLUDED MITEK REFERENCE PAGE MII-7473 rev. 1/2/2023 BEFORE USE.
Design valid for use only with MiTek® connectors. This design is based only upon parameters shown, and is for an individual building component, not a truss system. Before use, the building designer must verify the applicability of design parameters and properly incorporate this design into the overall building design. Bracing indicated is to prevent buckling of individual truss web and/or chord members only. Additional temporary and permanent bracing is always required for stability and to prevent collapse with possible personal injury and property damage. For general guidance regarding the fabrication, storage, delivery, erection and bracing of trusses and truss systems, see **ANSI/TPI1 Quality Criteria and DSB-22** available from Truss Plate Institute (www.tpinst.org) and **BCSI Building Component Safety Information** available from the Structural Building Component Association (www.sbcacomponents.com)

ENGINEERING BY TRENCO A MiTek Affiliate
818 Soundside Road
Edenton, NC 27932

Job	Truss	Truss Type	Qty	Ply	Lot 71 Magnolia Hills
J0125-0179	A4	SCISSORS	3	1	I67090938 Job Reference (optional)

Comtech, Inc, Fayetteville, NC - 28314, 8.630 s Jul 12 2024 MiTek Industries, Inc. Wed Jul 24 14:09:23 2024 Page 1
ID:d9Okus??o?Oqeo9B6tqaBuzGAgg-RfC?PsB70Hq3NSgPqnL8w3uITXbGKWrCDoi7J4zJC?f

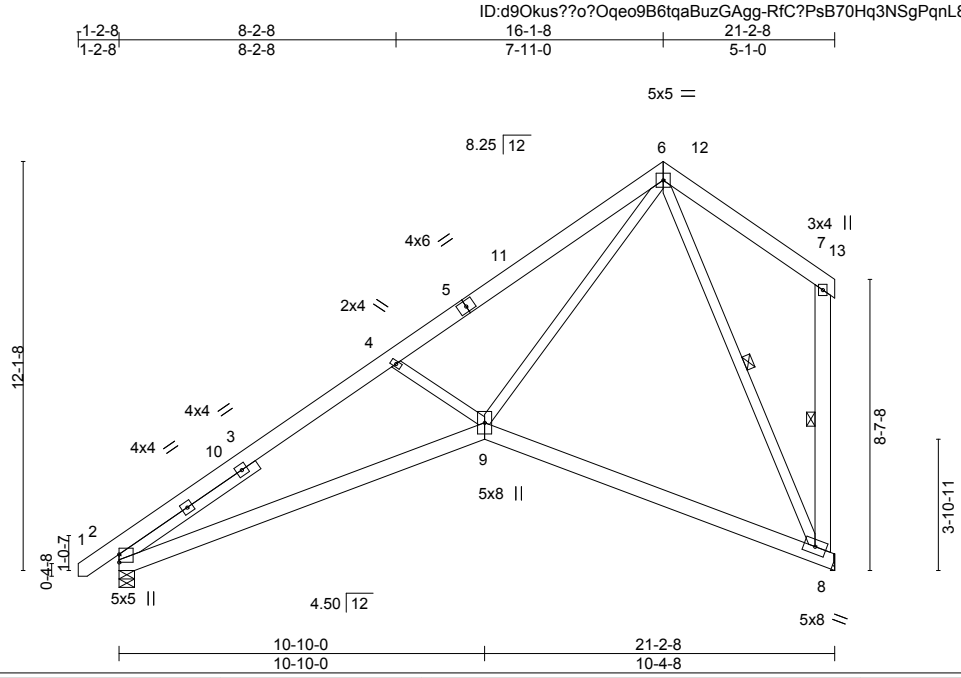

LOADING (psf)			SPACING- 2-0-0		CSI.		DEFL.	in	(loc)	l/defl	L/d	PLATES	GRIP
TCLL	20.0		Plate Grip DOL	1.15	TC	0.32	Vert(LL)	-0.11	2-9	>999	360	MT20	244/190
TCDL	10.0		Lumber DOL	1.15	BC	0.39	Vert(CT)	-0.23	2-9	>999	240		
BCLL	0.0	*	Rep Stress Incr	YES	WB	0.55	Horz(CT)	0.09	8	n/a	n/a		
BCDL	10.0		Code IRC2015/TPI2014		Matrix-S		Wind(LL)	0.05	9	>999	240	Weight: 180 lb	FT = 20%

LUMBER-

TOP CHORD	2x6 SP No.1
BOT CHORD	2x6 SP No.1
WEBS	2x4 SP No.2 *Except*
	7-8: 2x6 SP No.1
SLIDER	Left 2x4 SP No.2 4-11-15

BRACING-

TOP CHORD	Structural wood sheathing directly applied or 6-0-0 oc purlins, except end verticals.
BOT CHORD	Rigid ceiling directly applied or 9-10-4 oc bracing.
WEBS	1 Row at midpt 7-8, 6-8

REACTIONS. (size) 2=0-5-8, 8=Mechanical
Max Horz 2=318(LC 12)
Max Uplift 2=-25(LC 12), 8=-114(LC 12)
Max Grav 2=904(LC 1), 8=826(LC 1)

FORCES. (lb) - Max. Comp./Max. Ten. - All forces 250 (lb) or less except when shown.

TOP CHORD	2-4=-1732/474, 4-6=-1437/430
BOT CHORD	2-9=-611/1644, 8-9=-121/383
WEBS	4-9=-479/312, 6-9=-364/1429, 6-8=-816/255

NOTES-

1) Unbalanced roof live loads have been considered for this design.
2) Wind: ASCE 7-10; Vult=130mph Vasd=103mph; TCDL=6.0psf; BCDL=6.0psf; h=15ft; Cat. II; Exp C; Enclosed; MWFRS (envelope) and C-C Exterior(2) -1-0-15 to 3-3-14, Interior(1) 3-3-14 to 16-1-8, Exterior(2) 16-1-8 to 20-6-5, Interior(1) 20-6-5 to 20-10-4 zone;C-C for members and forces & MWFRS for reactions shown; Lumber DOL=1.60 plate grip DOL=1.60
3) This truss has been designed for a 10.0 psf bottom chord live load nonconcurrent with any other live loads.
4) * This truss has been designed for a live load of 30.0psf on the bottom chord in all areas where a rectangle 3-6-0 tall by 2-0-0 wide will fit between the bottom chord and any other members.
5) Refer to girder(s) for truss to truss connections.
6) Bearing at joint(s) 2 considers parallel to grain value using ANSI/TPI 1 angle to grain formula. Building designer should verify capacity of bearing surface.
7) Provide mechanical connection (by others) of truss to bearing plate capable of withstanding 100 lb uplift at joint(s) 2 except (jt=lb) 8=114.

July 26,2024

WARNING - Verify design parameters and READ NOTES ON THIS AND INCLUDED MITEK REFERENCE PAGE MII-7473 rev. 1/2/2023 BEFORE USE.
Design valid for use only with MiTek® connectors. This design is based only upon parameters shown, and is for an individual building component, not a truss system. Before use, the building designer must verify the applicability of design parameters and properly incorporate this design into the overall building design. Bracing indicated is to prevent buckling of individual truss web and/or chord members only. Additional temporary and permanent bracing is always required for stability and to prevent collapse with possible personal injury and property damage. For general guidance regarding the fabrication, storage, delivery, erection and bracing of trusses and truss systems, see **ANSI/TPI1 Quality Criteria and DSB-22** available from Truss Plate Institute (www.tpinst.org) and **BCSI Building Component Safety Information** available from the Structural Building Component Association (www.sbcacomponents.com)

ENGINEERING BY TRENCO A MiTek Affiliate
818 Soundside Road
Edenton, NC 27932

Job	Truss	Truss Type	Qty	Ply	Lot 71 Magnolia Hills
J0125-0179	A4-A	SCISSORS	1	1	I67090939 Job Reference (optional)

Comtech, Inc, Fayetteville, NC - 28314, 8.630 s Jul 12 2024 MiTek Industries, Inc. Wed Jul 24 14:09:23 2024 Page 1
ID:d9Okus??o?Oqeo9B6tqaBuzGAgg-RfC?PsB70Hq3NSgPqnL8w3uITXbGKWrCDoi7J4zJC?f

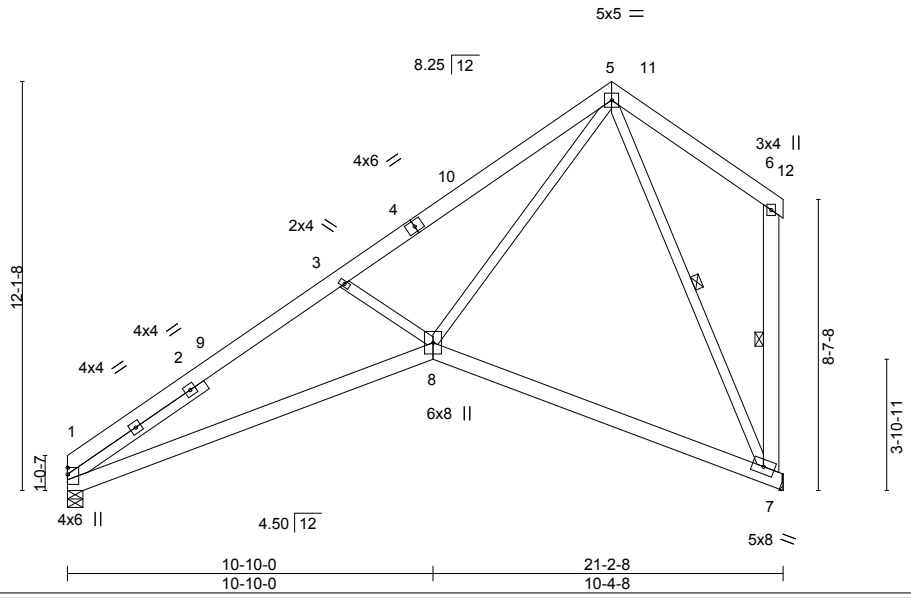

LOADING (psf)			SPACING- 2-0-0		CSI.		DEFL.	in	(loc)	l/defl	L/d	PLATES	GRIP
TCLL	20.0		Plate Grip DOL	1.15	TC	0.31	Vert(LL)	-0.11	1-8	>999	360	MT20	244/190
TCDL	10.0		Lumber DOL	1.15	BC	0.40	Vert(CT)	-0.24	1-8	>999	240		
BCLL	0.0	*	Rep Stress Incr	YES	WB	0.55	Horz(CT)	0.09	7	n/a	n/a		
BCDL	10.0		Code IRC2015/TPI2014		Matrix-S		Wind(LL)	0.05	8	>999	240	Weight: 177 lb	FT = 20%

LUMBER-

TOP CHORD	2x6 SP No.1
BOT CHORD	2x6 SP No.1
WEBS	2x4 SP No.2 *Except*
	6-7: 2x6 SP No.1
SLIDER	Left 2x4 SP No.2 4-11-15

BRACING-

TOP CHORD	Structural wood sheathing directly applied or 6-0-0 oc purlins, except end verticals.
BOT CHORD	Rigid ceiling directly applied or 9-9-11 oc bracing.
WEBS	1 Row at midpt 6-7, 5-7

REACTIONS. (size) 1=0-5-8, 7=Mechanical
Max Horz 1=315(LC 12)
Max Uplift 1=-7(LC 12), 7=-114(LC 12)
Max Grav 1=828(LC 1), 7=828(LC 1)

FORCES. (lb) - Max. Comp./Max. Ten. - All forces 250 (lb) or less except when shown.
TOP CHORD 1-3=-1742/478, 3-5=-1435/432
BOT CHORD 1-8=-615/1641, 7-8=-122/384
WEBS 3-8=-477/318, 5-8=-367/1427, 5-7=-819/255

NOTES-
1) Unbalanced roof live loads have been considered for this design.
2) Wind: ASCE 7-10; Vult=130mph Vasd=103mph; TCDL=6.0psf; BCDL=6.0psf; h=15ft; Cat. II; Exp C; Enclosed; MWFRS (envelope) and C-C Exterior(2) 0-1-15 to 4-6-12, Interior(1) 4-6-12 to 16-1-8, Exterior(2) 16-1-8 to 20-6-5, Interior(1) 20-6-5 to 20-10-4 zone;C-C for members and forces & MWFRS for reactions shown; Lumber DOL=1.60 plate grip DOL=1.60
3) This truss has been designed for a 10.0 psf bottom chord live load nonconcurrent with any other live loads.
4) * This truss has been designed for a live load of 30.0psf on the bottom chord in all areas where a rectangle 3-6-0 tall by 2-0-0 wide will fit between the bottom chord and any other members.
5) Refer to girder(s) for truss to truss connections.
6) Bearing at joint(s) 1 considers parallel to grain value using ANSI/TPI 1 angle to grain formula. Building designer should verify capacity of bearing surface.
7) Provide mechanical connection (by others) of truss to bearing plate capable of withstanding 100 lb uplift at joint(s) 1 except (jt=lb) 7=114.

July 26,2024

WARNING - Verify design parameters and READ NOTES ON THIS AND INCLUDED MITEK REFERENCE PAGE MII-7473 rev. 1/2/2023 BEFORE USE.
Design valid for use only with MiTek® connectors. This design is based only upon parameters shown, and is for an individual building component, not a truss system. Before use, the building designer must verify the applicability of design parameters and properly incorporate this design into the overall building design. Bracing indicated is to prevent buckling of individual truss web and/or chord members only. Additional temporary and permanent bracing is always required for stability and to prevent collapse with possible personal injury and property damage. For general guidance regarding the fabrication, storage, delivery, erection and bracing of trusses and truss systems, see **ANSI/TPI1 Quality Criteria and DSB-22** available from Truss Plate Institute (www.tpinst.org) and **BCSI Building Component Safety Information** available from the Structural Building Component Association (www.sbcacomponents.com)

ENGINEERING BY TRENCO A MiTek Affiliate
818 Soundside Road
Edenton, NC 27932

Job	Truss	Truss Type	Qty	Ply	Lot 71 Magnolia Hills
J0125-0179	A5	SCISSORS	2	1	I67090940 Job Reference (optional)

Comtech, Inc, Fayetteville, NC - 28314, 8.630 s Jul 12 2024 MiTek Industries, Inc. Wed Jul 24 14:09:24 2024 Page 1
ID:d9Okus??o?Oqeo9B6tqaBuzGAgg-RfC?PsB70Hq3NSgPqnL8w3uITXbGKWrCDoi7J4zJC?f

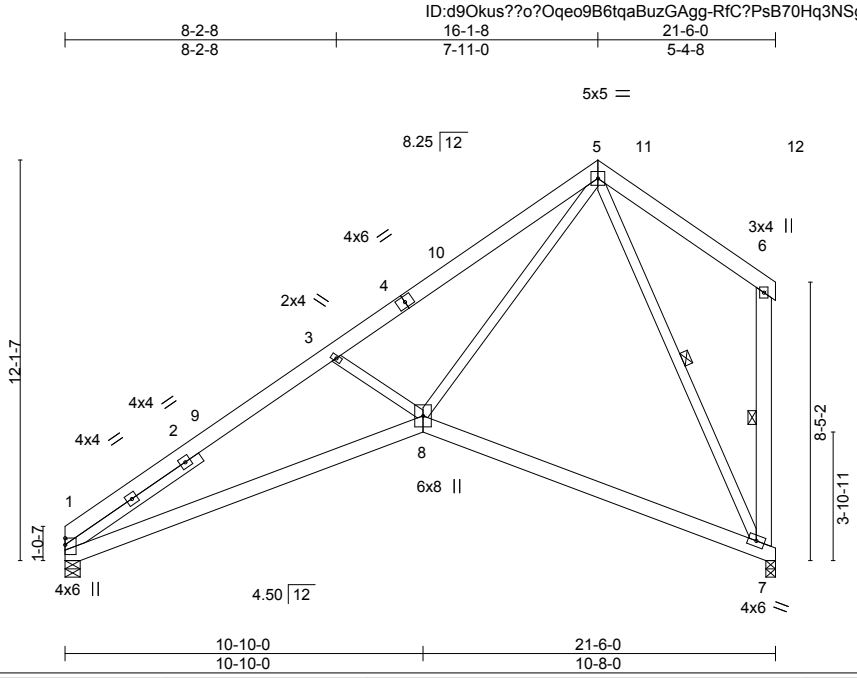

LOADING (psf)			SPACING-	2-0-0	CSI.		DEFL.	in	(loc)	l/defl	L/d	PLATES	GRIP
TCLL	20.0		Plate Grip DOL	1.15	TC	0.32	Vert(LL)	-0.11	1-8	>999	360	MT20	244/190
TCDL	10.0		Lumber DOL	1.15	BC	0.40	Vert(CT)	-0.24	1-8	>999	240		
BCLL	0.0	*	Rep Stress Incr	YES	WB	0.57	Horz(CT)	0.10	7	n/a	n/a		
BCDL	10.0		Code IRC2015/TPI2014		Matrix-S		Wind(LL)	0.05	8	>999	240	Weight: 178 lb	FT = 20%

LUMBER-

TOP CHORD	2x6 SP No.1
BOT CHORD	2x6 SP No.1
WEBS	2x4 SP No.2 *Except*
	6-7: 2x6 SP No.1
SLIDER	Left 2x4 SP No.2 4-11-15

BRACING-

TOP CHORD	Structural wood sheathing directly applied or 5-11-15 oc purlins, except end verticals.
BOT CHORD	Rigid ceiling directly applied or 9-9-15 oc bracing.
WEBS	1 Row at midpt 6-7, 5-7

REACTIONS. (size) 1=0-5-8, 7=0-3-8
Max Horz 1=311(LC 12)
Max Uplift 1=-10(LC 12), 7=-110(LC 12)
Max Grav 1=839(LC 1), 7=839(LC 1)

FORCES. (lb) - Max. Comp./Max. Ten. - All forces 250 (lb) or less except when shown.

TOP CHORD	1-3=-1777/486, 3-5=-1474/441
BOT CHORD	1-8=-614/1665, 7-8=-124/405
WEBS	3-8=-473/317, 5-8=-364/1444, 5-7=-828/248

NOTES-

1) Unbalanced roof live loads have been considered for this design.
2) Wind: ASCE 7-10; Vult=130mph Vasd=103mph; TCDL=6.0psf; BCDL=6.0psf; h=15ft; Cat. II; Exp C; Enclosed; MWFRS (envelope) and C-C Exterior(2) 0-1-15 to 4-6-12, Interior(1) 4-6-12 to 16-1-8, Exterior(2) 16-1-8 to 20-6-5, Interior(1) 20-6-5 to 21-1-12 zone;C-C for members and forces & MWFRS for reactions shown; Lumber DOL=1.60 plate grip DOL=1.60
3) This truss has been designed for a 10.0 psf bottom chord live load nonconcurrent with any other live loads.
4) * This truss has been designed for a live load of 30.0psf on the bottom chord in all areas where a rectangle 3-6-0 tall by 2-0-0 wide will fit between the bottom chord and any other members.
5) Bearing at joint(s) 1, 7 considers parallel to grain value using ANSI/TPI 1 angle to grain formula. Building designer should verify capacity of bearing surface.
6) Provide mechanical connection (by others) of truss to bearing plate capable of withstanding 100 lb uplift at joint(s) 1 except (jt=lb) 7=110.

July 26,2024

WARNING - Verify design parameters and READ NOTES ON THIS AND INCLUDED MITEK REFERENCE PAGE MII-7473 rev. 1/2/2023 BEFORE USE.
Design valid for use only with MiTek® connectors. This design is based only upon parameters shown, and is for an individual building component, not a truss system. Before use, the building designer must verify the applicability of design parameters and properly incorporate this design into the overall building design. Bracing indicated is to prevent buckling of individual truss web and/or chord members only. Additional temporary and permanent bracing is always required for stability and to prevent collapse with possible personal injury and property damage. For general guidance regarding the fabrication, storage, delivery, erection and bracing of trusses and truss systems, see **ANSI/TPI1 Quality Criteria and DSB-22** available from Truss Plate Institute (www.tpinst.org) and **BCSI Building Component Safety Information** available from the Structural Building Component Association (www.sbcacomponents.com)

ENGINEERING BY TRENCO A MiTek Affiliate
818 Soundside Road
Edenton, NC 27932

Job	Truss	Truss Type	Qty	Ply	Lot 71 Magnolia Hills
J0125-0179	A6	ROOF SPECIAL	1	1	I67090941 Job Reference (optional)

Comtech, Inc, Fayetteville, NC - 28314, 8.630 s Jul 12 2024 MiTek Industries, Inc. Wed Jul 24 14:09:25 2024 Page 1
ID:d9Okus??o?Oqeo9B6tqaBuzGAgg-RfC?PsB70Hq3NSgPqnL8w3uITXbGKWrCDoi7J4zJC?f

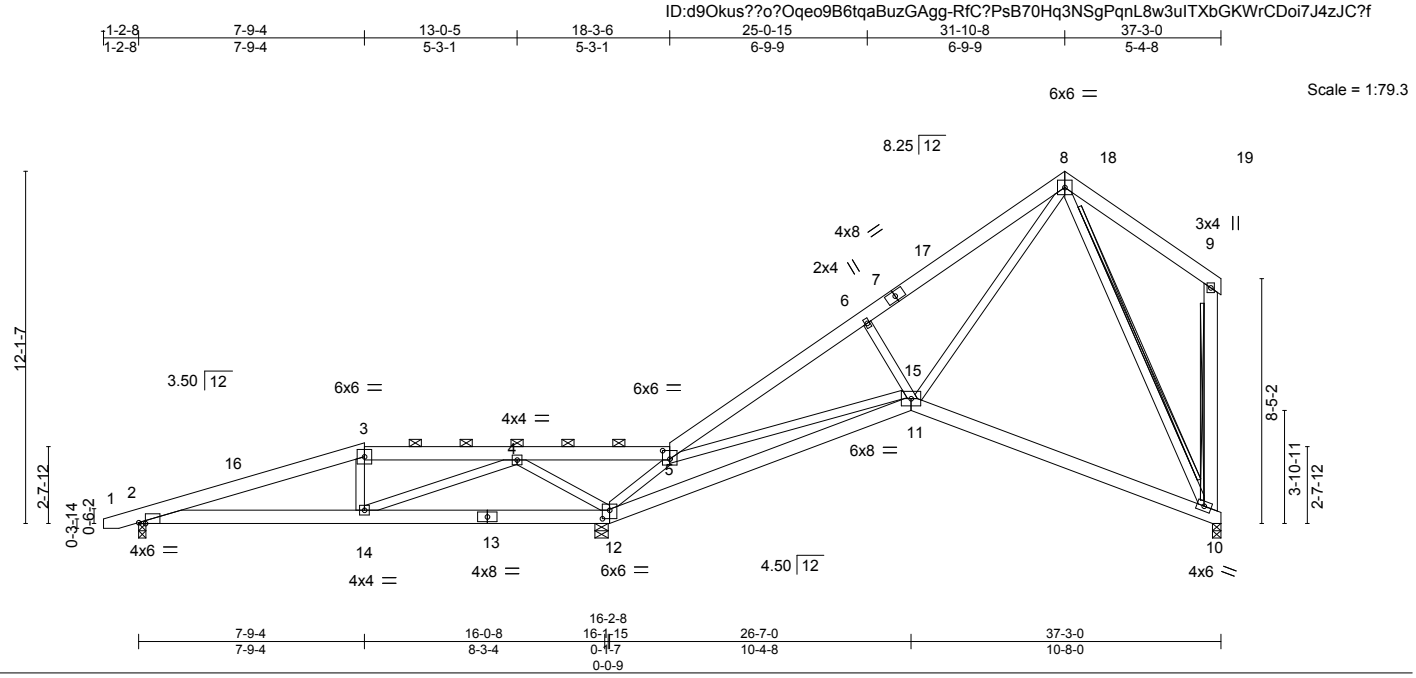

Plate Offsets (X,Y)-- [2:0-2-13,Edge], [5:0-3-0,0-3-8], [12:0-3-0,0-3-8]

LOADING (psf)		SPACING-	2-0-0	CSI.		DEFL.	in	(loc)	l/defl	L/d	PLATES	GRIP
TCLL	20.0	Plate Grip DOL	1.15	TC	0.28	Vert(LL)	-0.11	10-11	>999	360	MT20	244/190
TCDL	10.0	Lumber DOL	1.15	BC	0.32	Vert(CT)	-0.23	10-11	>999	240		
BCLL	0.0 *	Rep Stress Incr	YES	WB	0.62	Horz(CT)	0.09	10	n/a	n/a		
BCDL	10.0	Code IRC2015/TPI2014		Matrix-S		Wind(LL)	0.07	12-14	>999	240	Weight: 280 lb	FT = 20%

LUMBER-
TOP CHORD 2x6 SP No.1
BOT CHORD 2x6 SP No.1
WEBS 2x4 SP No.2 *Except*
9-10: 2x6 SP No.1

BRACING-
TOP CHORD Structural wood sheathing directly applied or 6-0-0 oc purlins, except end verticals, and 2-0-0 oc purlins (6-0-0 max.): 3-5.
BOT CHORD Rigid ceiling directly applied or 10-0-0 oc bracing, Except: 7-8-0 oc bracing: 2-14.
WEBS T-Brace: 2x4 SPF No.2 - 9-10, 8-10
Fasten (2X) T and I braces to narrow edge of web with 10d (0.131"x3") nails, 6in o.c.,with 3in minimum end distance. Brace must cover 90% of web length.

REACTIONS. (size) 12=0-5-8, 2=0-3-0, 10=0-3-8
Max Horz 2=313(LC 12)
Max Uplift 12=-139(LC 12), 2=-285(LC 8), 10=-82(LC 12)
Max Grav 12=1577(LC 1), 2=649(LC 23), 10=780(LC 1)

FORCES. (lb) - Max. Comp./Max. Ten. - All forces 250 (lb) or less except when shown.
TOP CHORD 2-3=-1154/825, 3-4=-1051/818, 4-5=-337/428, 5-6=-1526/311, 6-8=-1327/355
BOT CHORD 2-14=-1021/1045, 12-14=-447/436, 11-12=-178/735, 10-11=-96/366
WEBS 4-14=-628/662, 4-12=-1020/690, 5-12=-1372/342, 5-15=-271/658, 6-15=-440/273, 11-15=-412/258, 8-11=-262/1287, 8-10=-736/183

NOTES-
1) Unbalanced roof live loads have been considered for this design.
2) Wind: ASCE 7-10; Vult=130mph Vasd=103mph; TCDL=6.0psf; BCDL=6.0psf; h=15ft; Cat. II; Exp C; Enclosed; MWFRS (envelope) and C-C Exterior(2) -0-11-5 to 3-5-8, Interior(1) 3-5-8 to 31-10-8, Exterior(2) 31-10-8 to 36-3-5, Interior(1) 36-3-5 to 36-10-12 zone; porch left exposed;C-C for members and forces & MWFRS for reactions shown; Lumber DOL=1.60 plate grip DOL=1.60
3) Provide adequate drainage to prevent water ponding.
4) This truss has been designed for a 10.0 psf bottom chord live load nonconcurrent with any other live loads.
5) * This truss has been designed for a live load of 30.0psf on the bottom chord in all areas where a rectangle 3-6-0 tall by 2-0-0 wide will fit between the bottom chord and any other members.
6) Bearing at joint(s) 10 considers parallel to grain value using ANSI/TPI 1 angle to grain formula. Building designer should verify capacity of bearing surface.
7) Provide mechanical connection (by others) of truss to bearing plate capable of withstanding 100 lb uplift at joint(s) 10 except (jt=lb) 12=139, 2=285.
8) Graphical purlin representation does not depict the size or the orientation of the purlin along the top and/or bottom chord.
9) Warning: Additional permanent and stability bracing for truss system (not part of this component design) is always required.

July 26,2024

WARNING - Verify design parameters and READ NOTES ON THIS AND INCLUDED MITEK REFERENCE PAGE MII-7473 rev. 1/2/2023 BEFORE USE.
Design valid for use only with MiTek® connectors. This design is based only upon parameters shown, and is for an individual building component, not a truss system. Before use, the building designer must verify the applicability of design parameters and properly incorporate this design into the overall building design. Bracing indicated is to prevent buckling of individual truss web and/or chord members only. Additional temporary and permanent bracing is always required for stability and to prevent collapse with possible personal injury and property damage. For general guidance regarding the fabrication, storage, delivery, erection and bracing of trusses and truss systems, see **ANSI/TPI1 Quality Criteria and DSB-22** available from Truss Plate Institute (www.tpinst.org) and **BCSI Building Component Safety Information** available from the Structural Building Component Association (www.sbcacomponents.com)

ENGINEERING BY TRENCO A MiTek Affiliate
818 Soundside Road
Edenton, NC 27932

Job	Truss	Truss Type	Qty	Ply	Lot 71 Magnolia Hills
J0125-0179	A7	ROOF SPECIAL	1	1	I67090942 Job Reference (optional)

Comtech, Inc, Fayetteville, NC - 28314, 8.630 s Jul 12 2024 MiTek Industries, Inc. Wed Jul 24 14:09:25 2024 Page 1
ID:d9Okus??o?Oqeo9B6tqaBuzGAgg-RfC?PsB70Hq3NSgPqnL8w3uITXbGKWrCDoi7J4zJC?f

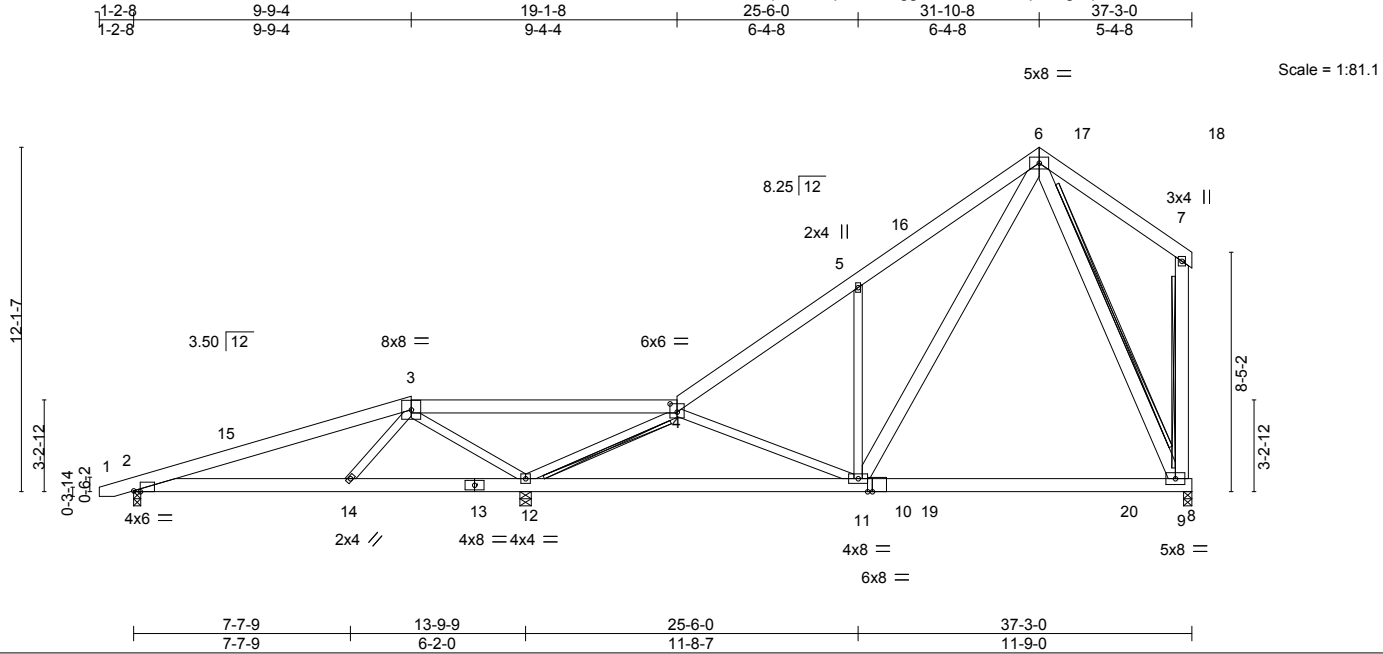

Plate Offsets (X,Y)-- [2:0-2-13,Edge], [4:0-3-0,0-3-8], [10:0-2-0,0-0-0]

LOADING (psf)		SPACING- 2-0-0		CSI.		DEFL.	in	(loc)	l/defl	L/d	PLATES	GRIP
TCLL	20.0	Plate Grip DOL	1.15	TC	0.46	Vert(LL)	-0.31	9-11	>894	360	MT20	244/190
TCDL	10.0	Lumber DOL	1.15	BC	0.61	Vert(CT)	-0.40	9-11	>687	240		
BCLL	0.0 *	Rep Stress Incr	YES	WB	0.52	Horz(CT)	0.01	9	n/a	n/a		
BCDL	10.0	Code IRC2015/TPI2014		Matrix-S		Wind(LL)	0.05	2-14	>999	240	Weight: 306 lb	FT = 20%

LUMBER-
TOP CHORD 2x6 SP No.1
BOT CHORD 2x6 SP No.1
WEBS 2x4 SP No.2 *Except*
6-11,7-9,6-9: 2x6 SP No.1

BRACING-
TOP CHORD Structural wood sheathing directly applied or 6-0-0 oc purlins, except end verticals, and 2-0-0 oc purlins (10-0-0 max.): 3-4.
BOT CHORD Rigid ceiling directly applied or 10-0-0 oc bracing, Except: 6-0-0 oc bracing: 12-14.
WEBS T-Brace: 2x4 SPF No.2 - 4-12, 7-9, 6-9
Fasten (2X) T and I braces to narrow edge of web with 10d (0.131"x3") nails, 6in o.c.,with 3in minimum end distance. Brace must cover 90% of web length.

REACTIONS. (size) 2=0-3-0, 12=0-4-13, 9=0-3-8
Max Horz 2=313(LC 12)
Max Uplift 2=-251(LC 8), 12=-157(LC 12), 9=-80(LC 12)
Max Grav 2=443(LC 23), 12=1744(LC 1), 9=1034(LC 19)

FORCES. (lb) - Max. Comp./Max. Ten. - All forces 250 (lb) or less except when shown.
TOP CHORD 2-3=-321/368, 3-4=-509/906, 4-5=-991/35, 5-6=-1045/250
BOT CHORD 2-14=-553/233, 12-14=-327/97, 11-12=-161/863, 9-11=-56/323
WEBS 3-14=-359/341, 3-12=-1212/788, 4-12=-1841/466, 5-11=-515/308, 6-11=-150/1041, 6-9=-693/146

NOTES-
1) Unbalanced roof live loads have been considered for this design.
2) Wind: ASCE 7-10; Vult=130mph Vasd=103mph; TCDL=6.0psf; BCDL=6.0psf; h=15ft; Cat. II; Exp C; Enclosed; MWFRS (envelope) and C-C Exterior(2) -0-11-5 to 3-5-8, Interior(1) 3-5-8 to 31-10-8, Exterior(2) 31-10-8 to 36-3-5, Interior(1) 36-3-5 to 36-10-12 zone; porch left exposed;C-C for members and forces & MWFRS for reactions shown; Lumber DOL=1.60 plate grip DOL=1.60
3) Provide adequate drainage to prevent water ponding.
4) This truss has been designed for a 10.0 psf bottom chord live load nonconcurrent with any other live loads.
5) * This truss has been designed for a live load of 30.0psf on the bottom chord in all areas where a rectangle 3-6-0 tall by 2-0-0 wide will fit between the bottom chord and any other members, with BCDL = 10.0psf.
6) Provide mechanical connection (by others) of truss to bearing plate capable of withstanding 100 lb uplift at joint(s) 9 except (jt=lb) 2=251, 12=157.
7) Graphical purlin representation does not depict the size or the orientation of the purlin along the top and/or bottom chord.
8) Warning: Additional permanent and stability bracing for truss system (not part of this component design) is always required.

July 26,2024

WARNING - Verify design parameters and READ NOTES ON THIS AND INCLUDED MITEK REFERENCE PAGE MII-7473 rev. 1/2/2023 BEFORE USE.
Design valid for use only with MiTek® connectors. This design is based only upon parameters shown, and is for an individual building component, not a truss system. Before use, the building designer must verify the applicability of design parameters and properly incorporate this design into the overall building design. Bracing indicated is to prevent buckling of individual truss web and/or chord members only. Additional temporary and permanent bracing is always required for stability and to prevent collapse with possible personal injury and property damage. For general guidance regarding the fabrication, storage, delivery, erection and bracing of trusses and truss systems, see **ANSI/TPI1 Quality Criteria and DSB-22** available from Truss Plate Institute (www.tpinst.org) and **BCSI Building Component Safety Information** available from the Structural Building Component Association (www.sbcacomponents.com)

ENGINEERING BY TRENCO A MiTek Affiliate
818 Soundside Road
Edenton, NC 27932

Job	Truss	Truss Type	Qty	Ply	Lot 71 Magnolia Hills
J0125-0179	A8	ROOF SPECIAL	1	1	I67090943 Job Reference (optional)

Comtech, Inc, Fayetteville, NC - 28314, 8.630 s Jul 12 2024 MiTek Industries, Inc. Wed Jul 24 14:09:26 2024 Page 1
ID:d9Okus??o?Oqeo9B6tqaBuzGAgg-RfC?PsB70Hq3NSgPqnL8w3uITXbGKWrCDoi7J4zJC?f

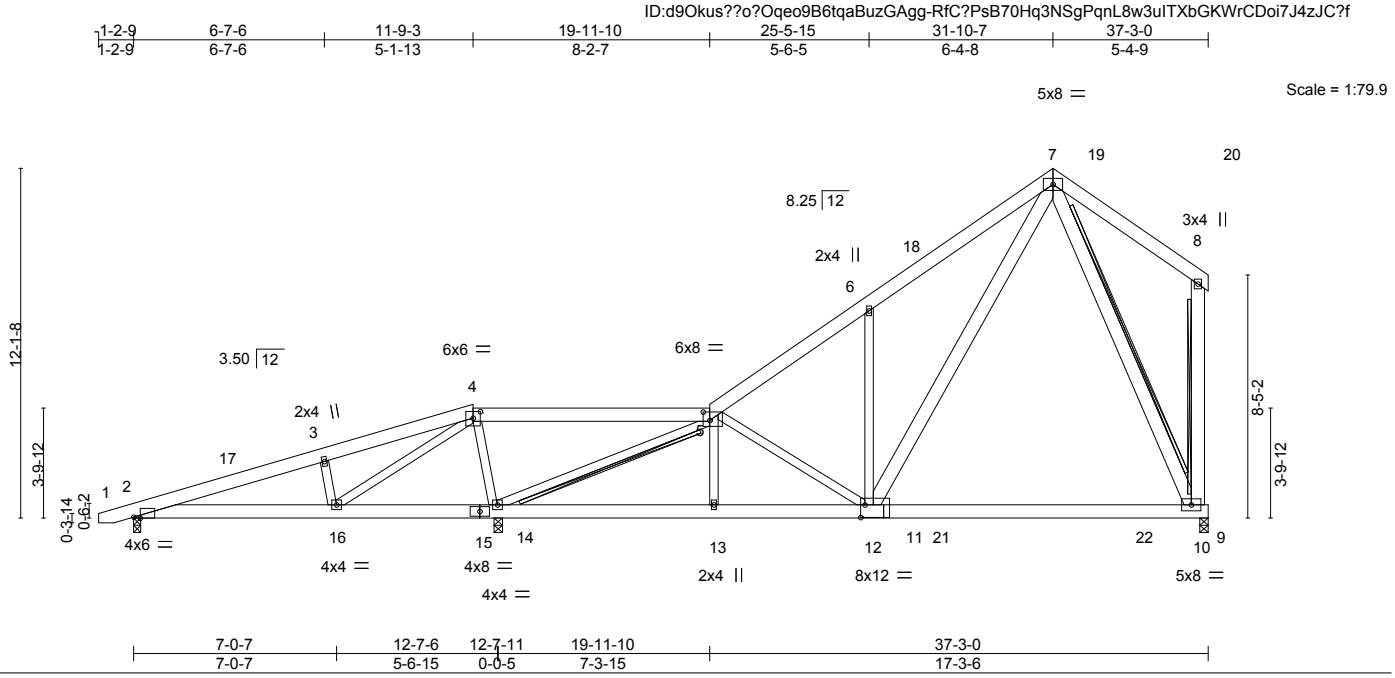

Plate Offsets (X,Y)-- [2:0-2-12,Edge], [4:0-3-0,0-2-12], [5:0-2-12,0-3-8], [12:0-1-12,0-5-4]

LOADING (psf)		SPACING- 2-0-0		CSI.		DEFL.	in	(loc)	l/defl	L/d	PLATES	GRIP
TCLL	20.0	Plate Grip DOL	1.15	TC	0.38	Vert(LL)	-0.27	10-12	>999	360	MT20	244/190
TCDL	10.0	Lumber DOL	1.15	BC	0.59	Vert(CT)	-0.39	10-12	>751	240		
BCLL	0.0 *	Rep Stress Incr	YES	WB	0.74	Horz(CT)	0.01	10	n/a	n/a		
BCDL	10.0	Code IRC2015/TPI2014		Matrix-S		Wind(LL)	0.04	2-16	>999	240	Weight: 315 lb	FT = 20%

LUMBER-
TOP CHORD 2x6 SP No.1
BOT CHORD 2x6 SP No.1
WEBS 2x4 SP No.2 *Except*
7-12,8-10,7-10: 2x6 SP No.1

BRACING-
TOP CHORD Structural wood sheathing directly applied or 6-0-0 oc purlins, except end verticals, and 2-0-0 oc purlins (10-0-0 max.): 4-5.
BOT CHORD Rigid ceiling directly applied or 6-0-0 oc bracing.
WEBS T-Brace: 2x4 SPF No.2 - 5-14, 8-10, 7-10
Fasten (2X) T and I braces to narrow edge of web with 10d (0.131"x3") nails, 6in o.c.,with 3in minimum end distance. Brace must cover 90% of web length.

REACTIONS. (size) 2=0-2-15, 14=0-3-8, 10=0-3-8
Max Horz 2=314(LC 12)
Max Uplift 2=-214(LC 8), 14=-183(LC 12), 10=-76(LC 12)
Max Grav 2=342(LC 23), 14=1806(LC 1), 10=1069(LC 19)

FORCES. (lb) - Max. Comp./Max. Ten. - All forces 250 (lb) or less except when shown.
TOP CHORD 2-3=-200/312, 3-4=-122/339, 4-5=-408/764, 5-6=-1057/53, 6-7=-1111/259
BOT CHORD 2-16=-449/142, 14-16=-577/137, 13-14=-118/1039, 12-13=-116/1039, 10-12=-59/340
WEBS 3-16=-343/167, 4-16=-676/786, 4-14=-863/515, 5-14=-1882/360, 5-12=-306/10, 6-12=-483/290, 7-12=-163/1124, 7-10=-738/158

NOTES-
1) Unbalanced roof live loads have been considered for this design.
2) Wind: ASCE 7-10; Vult=130mph Vasd=103mph; TCDL=6.0psf; BCDL=6.0psf; h=15ft; Cat. II; Exp C; Enclosed; MWFRS (envelope) and C-C Exterior(2) -0-11-6 to 3-5-7, Interior(1) 3-5-7 to 31-10-7, Exterior(2) 31-10-7 to 36-3-4, Interior(1) 36-3-4 to 36-10-12 zone; porch left exposed;C-C for members and forces & MWFRS for reactions shown; Lumber DOL=1.60 plate grip DOL=1.60
3) Provide adequate drainage to prevent water ponding.
4) This truss has been designed for a 10.0 psf bottom chord live load nonconcurrent with any other live loads.
5) * This truss has been designed for a live load of 30.0psf on the bottom chord in all areas where a rectangle 3-6-0 tall by 2-0-0 wide will fit between the bottom chord and any other members, with BCDL = 10.0psf.
6) Provide mechanical connection (by others) of truss to bearing plate at joint(s) 2.
7) Provide mechanical connection (by others) of truss to bearing plate capable of withstanding 100 lb uplift at joint(s) 10 except (jt=lb) 2=214, 14=183.
8) Graphical purlin representation does not depict the size or the orientation of the purlin along the top and/or bottom chord.
9) Warning: Additional permanent and stability bracing for truss system (not part of this component design) is always required.

NORTH CAROLINA PROFESSIONAL SEAL 036322 ENGINEER ERIC A. GILBERT
July 26,2024

WARNING - Verify design parameters and READ NOTES ON THIS AND INCLUDED MITEK REFERENCE PAGE MII-7473 rev. 1/2/2023 BEFORE USE.
Design valid for use only with MiTek® connectors. This design is based only upon parameters shown, and is for an individual building component, not a truss system. Before use, the building designer must verify the applicability of design parameters and properly incorporate this design into the overall building design. Bracing indicated is to prevent buckling of individual truss web and/or chord members only. Additional temporary and permanent bracing is always required for stability and to prevent collapse with possible personal injury and property damage. For general guidance regarding the fabrication, storage, delivery, erection and bracing of trusses and truss systems, see **ANSI/TPI1 Quality Criteria and DSB-22** available from Truss Plate Institute (www.tpinst.org) and **BCSI Building Component Safety Information** available from the Structural Building Component Association (www.sbcacomponents.com)

ENGINEERING BY TRENCO A MiTek Affiliate
818 Soundside Road
Edenton, NC 27932

Job	Truss	Truss Type	Qty	Ply	Lot 71 Magnolia Hills
J0125-0179	A9	ROOF SPECIAL	1	1	I67090944 Job Reference (optional)

Comtech, Inc, Fayetteville, NC - 28314, 8.630 s Jul 12 2024 MiTek Industries, Inc. Wed Jul 24 14:09:26 2024 Page 1
ID:d9Okus??o?Oqeo9B6tqaBuzGAgg-RfC?PsB70Hq3NSgPqnL8w3uITXbGKWrCDoi7J4zJC?f

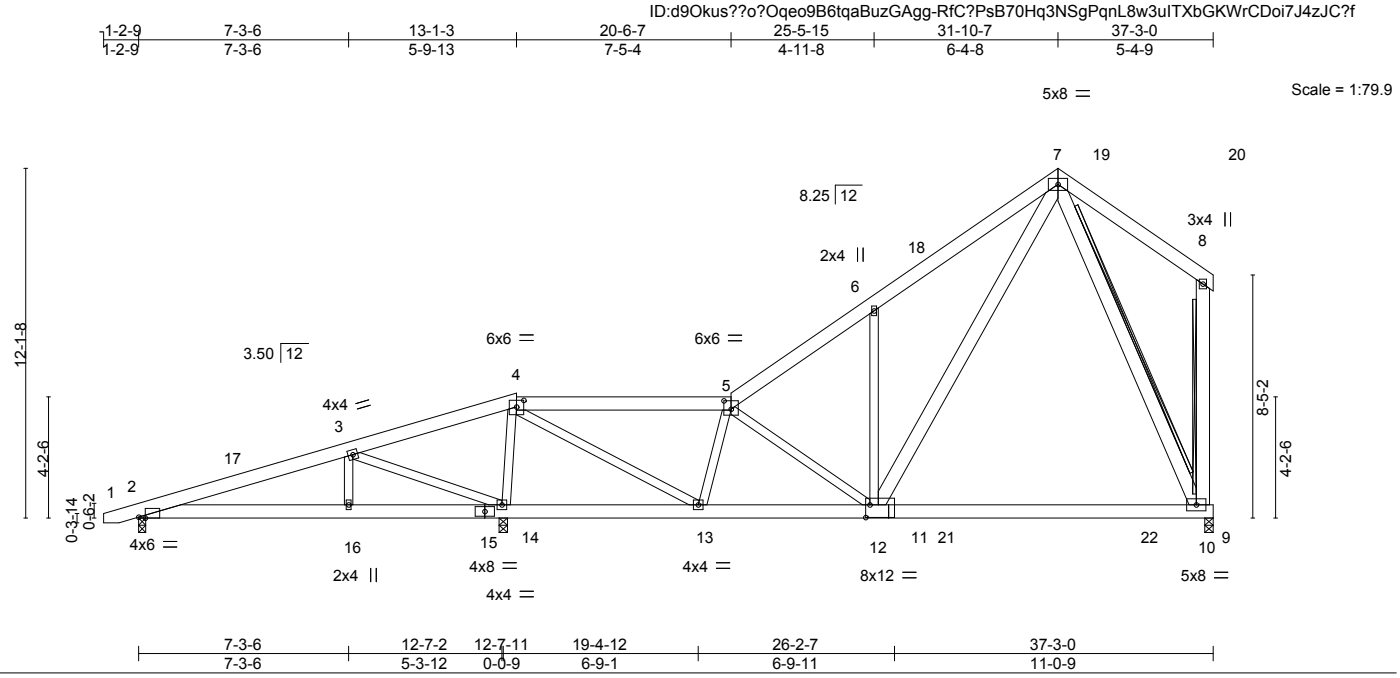

Plate Offsets (X,Y)-- [2:0-2-12,Edge], [4:0-3-0,0-2-12], [5:0-3-0,0-3-8], [12:0-1-12,0-5-4]

LOADING (psf)		SPACING- 2-0-0		CSI.		DEFL.	in	(loc)	l/defl	L/d	PLATES	GRIP
TCLL	20.0	Plate Grip DOL	1.15	TC	0.39	Vert(LL)	-0.28	10-12	>999	360	MT20	244/190
TCDL	10.0	Lumber DOL	1.15	BC	0.59	Vert(CT)	-0.39	10-12	>746	240		
BCLL	0.0 *	Rep Stress Incr	YES	WB	0.51	Horz(CT)	0.01	10	n/a	n/a		
BCDL	10.0	Code IRC2015/TPI2014		Matrix-S		Wind(LL)	0.04	2-16	>999	240	Weight: 315 lb	FT = 20%

LUMBER-
TOP CHORD 2x6 SP No.1
BOT CHORD 2x6 SP No.1
WEBS 2x4 SP No.2 *Except*
7-12,8-10,7-10: 2x6 SP No.1

BRACING-
TOP CHORD Structural wood sheathing directly applied or 6-0-0 oc purlins, except end verticals, and 2-0-0 oc purlins (6-0-0 max.): 4-5.
BOT CHORD Rigid ceiling directly applied or 6-0-0 oc bracing.
WEBS T-Brace: 2x4 SPF No.2 - 8-10, 7-10
Fasten (2X) T and I braces to narrow edge of web with 10d (0.131"x3") nails, 6in o.c.,with 3in minimum end distance. Brace must cover 90% of web length.

REACTIONS. (size) 2=0-2-15, 14=0-3-8, 10=0-3-8
Max Horz 2=313(LC 12)
Max Uplift 2=-208(LC 8), 14=-190(LC 12), 10=-74(LC 12)
Max Grav 2=335(LC 23), 14=1816(LC 1), 10=1062(LC 19)

FORCES. (lb) - Max. Comp./Max. Ten. - All forces 250 (lb) or less except when shown.
TOP CHORD 2-3=-142/305, 3-4=-449/803, 4-5=-807/0, 5-6=-1043/48, 6-7=-1090/248
BOT CHORD 2-16=-384/81, 14-16=-384/81, 13-14=-527/186, 12-13=-115/1010, 10-12=-57/336
WEBS 3-14=-871/686, 4-14=-1340/417, 4-13=-246/1453, 5-13=-743/203, 5-12=-286/16, 6-12=-457/280, 7-12=-150/1097, 7-10=-728/154

NOTES-
1) Unbalanced roof live loads have been considered for this design.
2) Wind: ASCE 7-10; Vult=130mph Vasd=103mph; TCDL=6.0psf; BCDL=6.0psf; h=15ft; Cat. II; Exp C; Enclosed; MWFRS (envelope) and C-C Exterior(2) -0-11-6 to 3-5-7, Interior(1) 3-5-7 to 31-10-7, Exterior(2) 31-10-7 to 36-3-4, Interior(1) 36-3-4 to 36-10-12 zone; porch left exposed;C-C for members and forces & MWFRS for reactions shown; Lumber DOL=1.60 plate grip DOL=1.60
3) Provide adequate drainage to prevent water ponding.
4) This truss has been designed for a 10.0 psf bottom chord live load nonconcurrent with any other live loads.
5) * This truss has been designed for a live load of 30.0psf on the bottom chord in all areas where a rectangle 3-6-0 tall by 2-0-0 wide will fit between the bottom chord and any other members, with BCDL = 10.0psf.
6) Provide mechanical connection (by others) of truss to bearing plate at joint(s) 2.
7) Provide mechanical connection (by others) of truss to bearing plate capable of withstanding 100 lb uplift at joint(s) 10 except (jt=lb) 2=208, 14=190.
8) Graphical purlin representation does not depict the size or the orientation of the purlin along the top and/or bottom chord.
9) Warning: Additional permanent and stability bracing for truss system (not part of this component design) is always required.

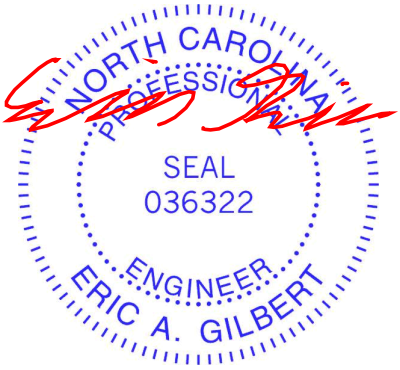

July 26,2024

WARNING - Verify design parameters and READ NOTES ON THIS AND INCLUDED MITEK REFERENCE PAGE MII-7473 rev. 1/2/2023 BEFORE USE.
Design valid for use only with MiTek® connectors. This design is based only upon parameters shown, and is for an individual building component, not a truss system. Before use, the building designer must verify the applicability of design parameters and properly incorporate this design into the overall building design. Bracing indicated is to prevent buckling of individual truss web and/or chord members only. Additional temporary and permanent bracing is always required for stability and to prevent collapse with possible personal injury and property damage. For general guidance regarding the fabrication, storage, delivery, erection and bracing of trusses and truss systems, see **ANSI/TPI1 Quality Criteria and DSB-22** available from Truss Plate Institute (www.tpinst.org) and **BCSI Building Component Safety Information** available from the Structural Building Component Association (www.sbcacomponents.com)

ENGINEERING BY TRENCO A MiTek Affiliate
818 Soundside Road
Edenton, NC 27932

Job	Truss	Truss Type	Qty	Ply	Lot 71 Magnolia Hills
J0125-0179	B1-GE	GABLE	1	1	I67090945 Job Reference (optional)

Comtech, Inc, Fayetteville, NC - 28314, 8.630 s Jul 12 2024 MiTek Industries, Inc. Wed Jul 24 14:09:27 2024 Page 1
ID:d9Okus??o?Oqeo9B6tqaBuzGAgg-RfC?PsB70Hq3NSgPqnL8w3uITXbGKWrCDoi7J4zJC?f

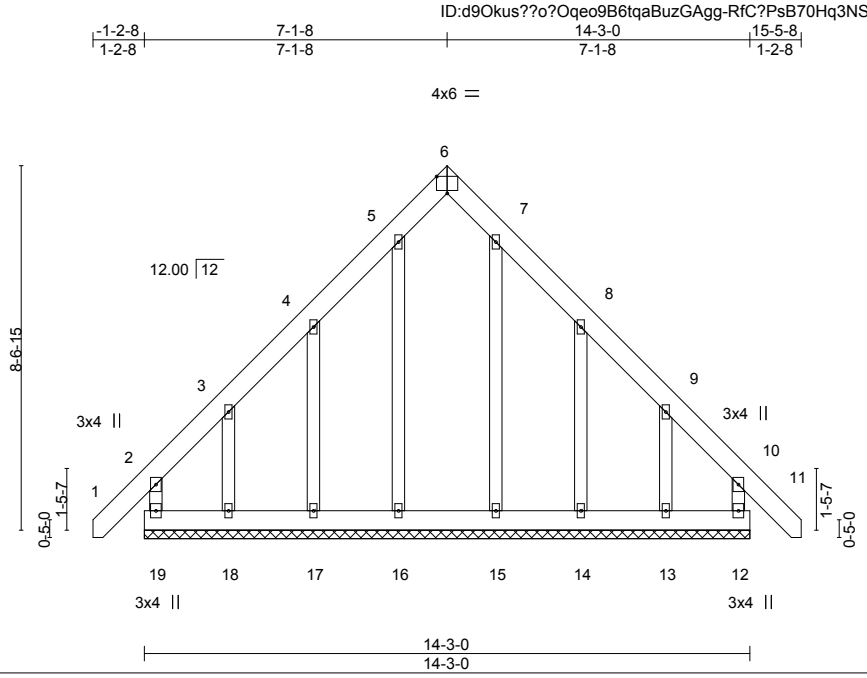

Plate Offsets (X,Y)-- [6:0-3-0,Edge]

LOADING (psf)		SPACING- 2-0-0		CSI.		DEFL. in (loc) l/defl L/d					PLATES	GRIP
TCLL	20.0	Plate Grip DOL	1.15	TC	0.15	Vert(LL)	-0.00	11	n/r	120	MT20	244/190
TCDL	10.0	Lumber DOL	1.15	BC	0.06	Vert(CT)	-0.00	11	n/r	120		
BCLL	0.0 *	Rep Stress Incr	YES	WB	0.13	Horz(CT)	0.00	12	n/a	n/a		
BCDL	10.0	Code IRC2015/TPI2014		Matrix-R							Weight: 132 lb	FT = 20%

LUMBER-
TOP CHORD 2x6 SP No.1
BOT CHORD 2x6 SP No.1
WEBS 2x4 SP No.2
OTHERS 2x4 SP No.2

BRACING-
TOP CHORD Structural wood sheathing directly applied or 6-0-0 oc purlins, except end verticals.
BOT CHORD Rigid ceiling directly applied or 10-0-0 oc bracing.

REACTIONS. All bearings 14-3-0.
(lb) - Max Horz 19=-297(LC 10)
Max Uplift All uplift 100 lb or less at joint(s) except 19=-159(LC 8), 12=-142(LC 9), 17=-166(LC 12), 18=-244(LC 12), 14=-167(LC 13), 13=-240(LC 13)
Max Grav All reactions 250 lb or less at joint(s) 17, 14, 13 except 19=266(LC 20), 12=252(LC 19), 16=280(LC 22), 18=255(LC 10), 15=276(LC 21)

FORCES. (lb) - Max. Comp./Max. Ten. - All forces 250 (lb) or less except when shown.
TOP CHORD 4-5=-211/286, 7-8=-212/286

NOTES-
1) Unbalanced roof live loads have been considered for this design.
2) Wind: ASCE 7-10; Vult=130mph Vasd=103mph; TCDL=6.0psf; BCDL=6.0psf; h=15ft; Cat. II; Exp C; Enclosed; MWFRS (envelope) gable end zone and C-C Exterior(2) zone; end vertical left and right exposed;C-C for members and forces & MWFRS for reactions shown; Lumber DOL=1.60 plate grip DOL=1.60
3) Truss designed for wind loads in the plane of the truss only. For studs exposed to wind (normal to the face), see Standard Industry Gable End Details as applicable, or consult qualified building designer as per ANSI/TPI 1.
4) All plates are 2x4 MT20 unless otherwise indicated.
5) Gable requires continuous bottom chord bearing.
6) Truss to be fully sheathed from one face or securely braced against lateral movement (i.e. diagonal web).
7) Gable studs spaced at 2-0-0 oc.
8) This truss has been designed for a 10.0 psf bottom chord live load nonconcurrent with any other live loads.
9) * This truss has been designed for a live load of 30.0psf on the bottom chord in all areas where a rectangle 3-6-0 tall by 2-0-0 wide will fit between the bottom chord and any other members, with BCDL = 10.0psf.
10) Provide mechanical connection (by others) of truss to bearing plate capable of withstanding 159 lb uplift at joint 19, 142 lb uplift at joint 12, 166 lb uplift at joint 17, 244 lb uplift at joint 18, 167 lb uplift at joint 14 and 240 lb uplift at joint 13.

July 26,2024

WARNING - Verify design parameters and READ NOTES ON THIS AND INCLUDED MITEK REFERENCE PAGE MII-7473 rev. 1/2/2023 BEFORE USE.
Design valid for use only with MiTek® connectors. This design is based only upon parameters shown, and is for an individual building component, not a truss system. Before use, the building designer must verify the applicability of design parameters and properly incorporate this design into the overall building design. Bracing indicated is to prevent buckling of individual truss web and/or chord members only. Additional temporary and permanent bracing is always required for stability and to prevent collapse with possible personal injury and property damage. For general guidance regarding the fabrication, storage, delivery, erection and bracing of trusses and truss systems, see **ANSI/TPI1 Quality Criteria and DSB-22** available from Truss Plate Institute (www.tpinst.org) and **BCSI Building Component Safety Information** available from the Structural Building Component Association (www.sbcacomponents.com)

ENGINEERING BY TRENCO A MiTek Affiliate
818 Soundside Road
Edenton, NC 27932

Job	Truss	Truss Type	Qty	Ply	Lot 71 Magnolia Hills
J0125-0179	B2	COMMON	1	1	I67090946 Job Reference (optional)

Comtech, Inc, Fayetteville, NC - 28314, 8.630 s Jul 12 2024 MiTek Industries, Inc. Wed Jul 24 14:09:28 2024 Page 1
ID:d9Okus??o?Oqeo9B6tqaBuzGAgg-RfC?PsB70Hq3NSgPqnL8w3uITXbGKWrCDoi7J4zJC?f

Scale = 1:51.4

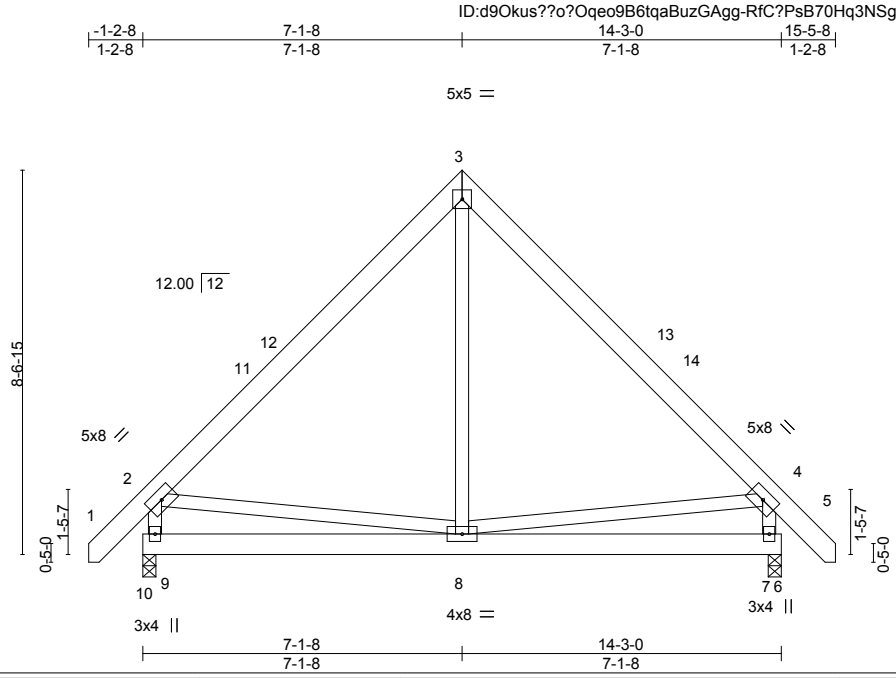

LOADING (psf)			SPACING- 2-0-0		CSI.		DEFL.	in	(loc)	l/defl	L/d	PLATES	GRIP
TCLL	20.0		Plate Grip DOL	1.15	TC	0.39	Vert(LL)	-0.01	8-9	>999	360	MT20	244/190
TCDL	10.0		Lumber DOL	1.15	BC	0.13	Vert(CT)	-0.02	8-9	>999	240		
BCLL	0.0	*	Rep Stress Incr	YES	WB	0.09	Horz(CT)	0.00	7	n/a	n/a		
BCDL	10.0		Code IRC2015/TPI2014		Matrix-S		Wind(LL)	0.00	8-9	>999	240	Weight: 123 lb	FT = 20%

LUMBER-
TOP CHORD 2x6 SP No.1
BOT CHORD 2x6 SP No.1
WEBS 2x4 SP No.2

BRACING-
TOP CHORD Structural wood sheathing directly applied or 6-0-0 oc purlins, except end verticals.
BOT CHORD Rigid ceiling directly applied or 10-0-0 oc bracing.

REACTIONS. (size) 9=0-3-8, 7=0-3-8
Max Horz 9=-237(LC 10)
Max Uplift 9=-28(LC 12), 7=-28(LC 13)
Max Grav 9=636(LC 1), 7=636(LC 1)

FORCES. (lb) - Max. Comp./Max. Ten. - All forces 250 (lb) or less except when shown.
TOP CHORD 2-3=-511/170, 3-4=-511/170, 2-9=-563/249, 4-7=-563/250
BOT CHORD 8-9=-243/348, 7-8=-95/280
WEBS 3-8=0/273

NOTES-
1) Unbalanced roof live loads have been considered for this design.
2) Wind: ASCE 7-10; Vult=130mph Vasd=103mph; TCDL=6.0psf; BCDL=6.0psf; h=15ft; Cat. II; Exp C; Enclosed; MWFRS (envelope) and C-C Exterior(2) -1-1-2 to 3-3-11, Interior(1) 3-3-11 to 7-1-8, Exterior(2) 7-1-8 to 11-6-5, Interior(1) 11-6-5 to 15-4-2 zone; end vertical left and right exposed;C-C for members and forces & MWFRS for reactions shown; Lumber DOL=1.60 plate grip DOL=1.60
3) This truss has been designed for a 10.0 psf bottom chord live load nonconcurrent with any other live loads.
4) * This truss has been designed for a live load of 30.0psf on the bottom chord in all areas where a rectangle 3-6-0 tall by 2-0-0 wide will fit between the bottom chord and any other members.
5) Provide mechanical connection (by others) of truss to bearing plate capable of withstanding 28 lb uplift at joint 9 and 28 lb uplift at joint 7.

July 26,2024

WARNING - Verify design parameters and READ NOTES ON THIS AND INCLUDED MITEK REFERENCE PAGE MII-7473 rev. 1/2/2023 BEFORE USE.
Design valid for use only with MiTek® connectors. This design is based only upon parameters shown, and is for an individual building component, not a truss system. Before use, the building designer must verify the applicability of design parameters and properly incorporate this design into the overall building design. Bracing indicated is to prevent buckling of individual truss web and/or chord members only. Additional temporary and permanent bracing is always required for stability and to prevent collapse with possible personal injury and property damage. For general guidance regarding the fabrication, storage, delivery, erection and bracing of trusses and truss systems, see **ANSI/TPI1 Quality Criteria and DSB-22** available from Truss Plate Institute (www.tpinst.org) and **BCSI Building Component Safety Information** available from the Structural Building Component Association (www.sbcacomponents.com)

ENGINEERING BY TRENCO A MiTek Affiliate
818 Soundside Road
Edenton, NC 27932

Job	Truss	Truss Type	Qty	Ply	Lot 71 Magnolia Hills
J0125-0179	B3	COMMON	3	1	I67090947 Job Reference (optional)

Comtech, Inc, Fayetteville, NC - 28314, 8.630 s Jul 12 2024 MiTek Industries, Inc. Wed Jul 24 14:09:28 2024 Page 1
ID:d9Okus??o?Oqeo9B6tqaBuzGAgg-RfC?PsB70Hq3NSgPqnL8w3uITXbGKWrCDoi7J4zJC?f

Scale = 1:51.4

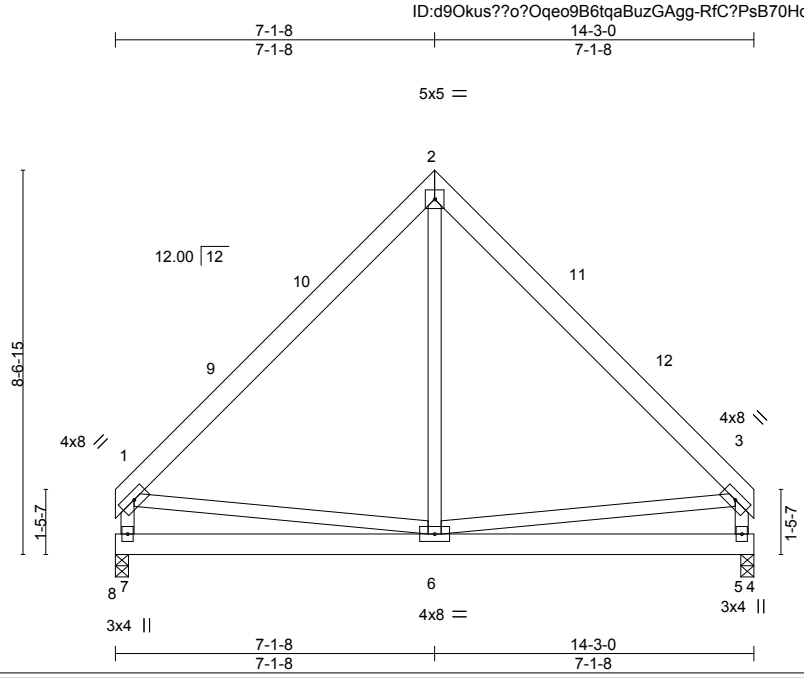

LOADING (psf)			SPACING- 2-0-0		CSI.		DEFL.	in	(loc)	l/defl	L/d	PLATES	GRIP
TCLL	20.0		Plate Grip DOL	1.15	TC	0.25	Vert(LL)	-0.01	6-7	>999	360	MT20	244/190
TCDL	10.0		Lumber DOL	1.15	BC	0.13	Vert(CT)	-0.02	6-7	>999	240		
BCLL	0.0	*	Rep Stress Incr	YES	WB	0.06	Horz(CT)	0.00	5	n/a	n/a		
BCDL	10.0		Code IRC2015/TPI2014		Matrix-S		Wind(LL)	0.00	6	>999	240	Weight: 116 lb	FT = 20%

LUMBER-
TOP CHORD 2x6 SP No.1
BOT CHORD 2x6 SP No.1
WEBS 2x4 SP No.2

BRACING-
TOP CHORD Structural wood sheathing directly applied or 6-0-0 oc purlins, except end verticals.
BOT CHORD Rigid ceiling directly applied or 10-0-0 oc bracing.

REACTIONS. (size) 7=0-3-8, 5=0-3-8
Max Horz 7=205(LC 9)
Max Uplift 7=-20(LC 13), 5=-20(LC 12)
Max Grav 7=555(LC 1), 5=555(LC 1)

FORCES. (lb) - Max. Comp./Max. Ten. - All forces 250 (lb) or less except when shown.
TOP CHORD 1-2=-515/163, 2-3=-515/163, 1-7=-483/174, 3-5=-483/175
BOT CHORD 6-7=-228/298
WEBS 2-6=0/270

NOTES-
1) Unbalanced roof live loads have been considered for this design.
2) Wind: ASCE 7-10; Vult=130mph Vasd=103mph; TCDL=6.0psf; BCDL=6.0psf; h=15ft; Cat. II; Exp C; Enclosed; MWFRS (envelope) and C-C Exterior(2) 0-3-1 to 4-7-14, Interior(1) 4-7-14 to 7-1-8, Exterior(2) 7-1-8 to 11-6-5, Interior(1) 11-6-5 to 13-11-15 zone; end vertical left and right exposed;C-C for members and forces & MWFRS for reactions shown; Lumber DOL=1.60 plate grip DOL=1.60
3) This truss has been designed for a 10.0 psf bottom chord live load nonconcurrent with any other live loads.
4) * This truss has been designed for a live load of 30.0psf on the bottom chord in all areas where a rectangle 3-6-0 tall by 2-0-0 wide will fit between the bottom chord and any other members.
5) Provide mechanical connection (by others) of truss to bearing plate capable of withstanding 20 lb uplift at joint 7 and 20 lb uplift at joint 5.

NORTH CAROLINA PROFESSIONAL SEAL 036322 ENGINEER ERIC A. GILBERT

July 26,2024

WARNING - Verify design parameters and READ NOTES ON THIS AND INCLUDED MITEK REFERENCE PAGE MII-7473 rev. 1/2/2023 BEFORE USE.
Design valid for use only with MiTek® connectors. This design is based only upon parameters shown, and is for an individual building component, not a truss system. Before use, the building designer must verify the applicability of design parameters and properly incorporate this design into the overall building design. Bracing indicated is to prevent buckling of individual truss web and/or chord members only. Additional temporary and permanent bracing is always required for stability and to prevent collapse with possible personal injury and property damage. For general guidance regarding the fabrication, storage, delivery, erection and bracing of trusses and truss systems, see **ANSI/TPI1 Quality Criteria and DSB-22** available from Truss Plate Institute (www.tpinst.org) and **BCSI Building Component Safety Information** available from the Structural Building Component Association (www.sbcacomponents.com)

ENGINEERING BY TRENCO A MiTek Affiliate
818 Soundside Road
Edenton, NC 27932

Job	Truss	Truss Type	Qty	Ply	Lot 71 Magnolia Hills
J0125-0179	B4	COMMON	1	1	I67090948 Job Reference (optional)

Comtech, Inc, Fayetteville, NC - 28314, 8.630 s Jul 12 2024 MiTek Industries, Inc. Wed Jul 24 14:09:29 2024 Page 1
ID:d9Okus??o?Oqeo9B6tqaBuzGAgg-RfC?PsB70Hq3NSgPqnL8w3uITXbGKWrCDoi7J4zJC?f

Scale = 1:51.4

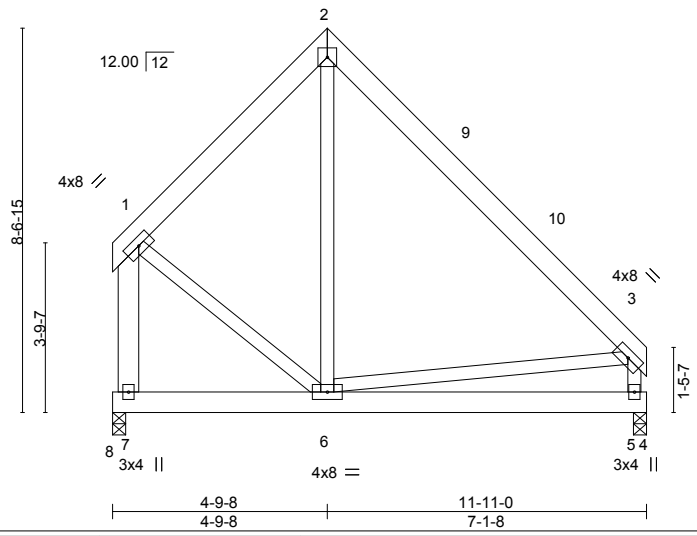

LOADING (psf)			SPACING- 2-0-0		CSI.		DEFL. in (loc) l/defl L/d				PLATES	GRIP
TCLL	20.0		Plate Grip DOL	1.15	TC	0.27	Vert(LL)	-0.01	5-6	>999	360	MT20	244/190
TCDL	10.0		Lumber DOL	1.15	BC	0.11	Vert(CT)	-0.03	5-6	>999	240		
BCLL	0.0	*	Rep Stress Incr	YES	WB	0.13	Horz(CT)	0.00	5	n/a	n/a		
BCDL	10.0		Code IRC2015/TPI2014		Matrix-S		Wind(LL)	0.00	6	>999	240	Weight: 107 lb	FT = 20%

LUMBER-
TOP CHORD 2x6 SP No.1
BOT CHORD 2x6 SP No.1
WEBS 2x4 SP No.2 *Except*
1-7: 2x6 SP No.1

BRACING-
TOP CHORD Structural wood sheathing directly applied or 6-0-0 oc purlins, except end verticals.
BOT CHORD Rigid ceiling directly applied or 10-0-0 oc bracing.

REACTIONS. (size) 7=0-3-8, 5=0-3-8
Max Horz 7=-186(LC 8)
Max Uplift 7=-45(LC 13), 5=-4(LC 12)
Max Grav 7=459(LC 1), 5=458(LC 1)

FORCES. (lb) - Max. Comp./Max. Ten. - All forces 250 (lb) or less except when shown.
TOP CHORD 1-2=-333/161, 2-3=-392/115, 1-7=-427/162, 3-5=-383/141

NOTES-
1) Unbalanced roof live loads have been considered for this design.
2) Wind: ASCE 7-10; Vult=130mph Vasd=103mph; TCDL=6.0psf; BCDL=6.0psf; h=15ft; Cat. II; Exp C; Enclosed; MWFRS (envelope) and C-C Exterior(2) 0-4-4 to 9-2-5, Interior(1) 9-2-5 to 11-7-15 zone; end vertical right exposed;C-C for members and forces & MWFRS for reactions shown; Lumber DOL=1.60 plate grip DOL=1.60
3) This truss has been designed for a 10.0 psf bottom chord live load nonconcurrent with any other live loads.
4) * This truss has been designed for a live load of 30.0psf on the bottom chord in all areas where a rectangle 3-6-0 tall by 2-0-0 wide will fit between the bottom chord and any other members.
5) Provide mechanical connection (by others) of truss to bearing plate capable of withstanding 45 lb uplift at joint 7 and 4 lb uplift at joint 5.

NORTH CAROLINA PROFESSIONAL SEAL 036322 ENGINEER ERIC A. GILBERT

July 26,2024

WARNING - Verify design parameters and READ NOTES ON THIS AND INCLUDED MITEK REFERENCE PAGE MII-7473 rev. 1/2/2023 BEFORE USE.
Design valid for use only with MiTek® connectors. This design is based only upon parameters shown, and is for an individual building component, not a truss system. Before use, the building designer must verify the applicability of design parameters and properly incorporate this design into the overall building design. Bracing indicated is to prevent buckling of individual truss web and/or chord members only. Additional temporary and permanent bracing is always required for stability and to prevent collapse with possible personal injury and property damage. For general guidance regarding the fabrication, storage, delivery, erection and bracing of trusses and truss systems, see **ANSI/TPI1 Quality Criteria and DSB-22** available from Truss Plate Institute (www.tpinst.org) and **BCSI Building Component Safety Information** available from the Structural Building Component Association (www.sbcacomponents.com)

ENGINEERING BY TRENCO A MiTek Affiliate
818 Soundside Road
Edenton, NC 27932

Job	Truss	Truss Type	Qty	Ply	Lot 71 Magnolia Hills
J0125-0179	C1-GE	GABLE	1	1	I67090949 Job Reference (optional)

Comtech, Inc, Fayetteville, NC - 28314, 8.630 s Jul 12 2024 MiTek Industries, Inc. Wed Jul 24 14:09:29 2024 Page 1
ID:d9Okus??o?Oqeo9B6tqaBuzGAgg-RfC?PsB70Hq3NSgPqnL8w3uITXbGKWrCDoi7J4zJC?f

1-3-0 5-7-4 11-2-8 12-5-8
1-3-0 5-7-4 5-7-4 1-3-0

Scale = 1:67.3

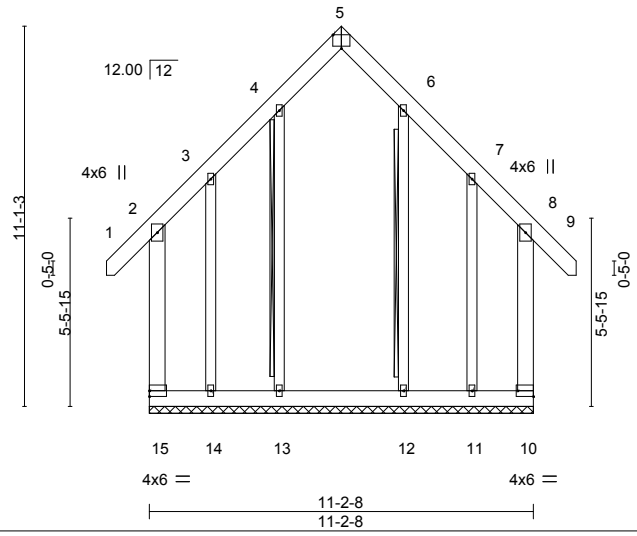

Plate Offsets (X,Y)-- [5:0-3-0,Edge], [10:Edge,0-2-0]

LOADING (psf)		SPACING- 2-0-0		CSI.		DEFL. in (loc) l/defl L/d					PLATES	GRIP
TCLL	20.0	Plate Grip DOL	1.15	TC	0.31	Vert(LL)	0.00	8	n/r	120	MT20	244/190
TCDL	10.0	Lumber DOL	1.15	BC	0.24	Vert(CT)	0.00	8	n/r	120		
BCLL	0.0 *	Rep Stress Incr	YES	WB	0.31	Horz(CT)	-0.00	10	n/a	n/a		
BCDL	10.0	Code IRC2015/TPI2014		Matrix-R							Weight: 139 lb	FT = 20%

LUMBER-

TOP CHORD	2x6 SP No.1
BOT CHORD	2x6 SP No.1
WEBS	2x6 SP No.1
OTHERS	2x4 SP No.2

BRACING-

TOP CHORD	Structural wood sheathing directly applied or 6-0-0 oc purlins, except end verticals.
BOT CHORD	Rigid ceiling directly applied or 10-0-0 oc bracing.
WEBS	T-Brace: 2x4 SPF No.2 - 4-13, 6-12 Fasten (2X) T and I braces to narrow edge of web with 10d (0.131"x3") nails, 6in o.c.,with 3in minimum end distance. Brace must cover 90% of web length.

REACTIONS. All bearings 11-2-8.
(lb) - Max Horz 15=429(LC 11)
Max Uplift All uplift 100 lb or less at joint(s) except 15=-617(LC 8), 10=-613(LC 9), 14=-722(LC 9), 11=-718(LC 8)
Max Grav All reactions 250 lb or less at joint(s) except 15=703(LC 11), 10=698(LC 10), 13=385(LC 22), 14=801(LC 10), 12=385(LC 21), 11=798(LC 11)

FORCES. (lb) - Max. Comp./Max. Ten. - All forces 250 (lb) or less except when shown.
TOP CHORD 2-3=-325/317, 3-4=-201/364, 6-7=-202/365, 7-8=-322/315, 2-15=-363/345, 8-10=-361/343
WEBS 3-14=-419/363, 7-11=-418/362

NOTES-
1) Unbalanced roof live loads have been considered for this design.
2) Wind: ASCE 7-10; Vult=130mph Vasd=103mph; TCDL=6.0psf; BCDL=6.0psf; h=15ft; Cat. II; Exp C; Enclosed; MWFRS (envelope) gable end zone and C-C Exterior(2) zone; end vertical left and right exposed;C-C for members and forces & MWFRS for reactions shown; Lumber DOL=1.60 plate grip DOL=1.60
3) Truss designed for wind loads in the plane of the truss only. For studs exposed to wind (normal to the face), see Standard Industry Gable End Details as applicable, or consult qualified building designer as per ANSI/TPI 1.
4) All plates are 2x4 MT20 unless otherwise indicated.
5) Gable requires continuous bottom chord bearing.
6) Truss to be fully sheathed from one face or securely braced against lateral movement (i.e. diagonal web).
7) Gable studs spaced at 2-0-0 oc.
8) This truss has been designed for a 10.0 psf bottom chord live load nonconcurrent with any other live loads.
9) * This truss has been designed for a live load of 30.0psf on the bottom chord in all areas where a rectangle 3-6-0 tall by 2-0-0 wide will fit between the bottom chord and any other members, with BCDL = 10.0psf.
10) Provide mechanical connection (by others) of truss to bearing plate capable of withstanding 617 lb uplift at joint 15, 613 lb uplift at joint 10, 722 lb uplift at joint 14 and 718 lb uplift at joint 11.
11) Warning: Additional permanent and stability bracing for truss system (not part of this component design) is always required.

July 26,2024

WARNING - Verify design parameters and READ NOTES ON THIS AND INCLUDED MITEK REFERENCE PAGE MII-7473 rev. 1/2/2023 BEFORE USE.
Design valid for use only with MiTek® connectors. This design is based only upon parameters shown, and is for an individual building component, not a truss system. Before use, the building designer must verify the applicability of design parameters and properly incorporate this design into the overall building design. Bracing indicated is to prevent buckling of individual truss web and/or chord members only. Additional temporary and permanent bracing is always required for stability and to prevent collapse with possible personal injury and property damage. For general guidance regarding the fabrication, storage, delivery, erection and bracing of trusses and truss systems, see **ANSI/TPI1 Quality Criteria and DSB-22** available from Truss Plate Institute (www.tpinst.org) and **BCSI Building Component Safety Information** available from the Structural Building Component Association (www.sbcacomponents.com)

ENGINEERING BY TRENCO A MiTek Affiliate
818 Soundside Road
Edenton, NC 27932

Job	Truss	Truss Type	Qty	Ply	Lot 71 Magnolia Hills
J0125-0179	C2	COMMON	2	1	I67090950
					Job Reference (optional)

Comtech, Inc, Fayetteville, NC - 28314, 8.630 s Jul 12 2024 MiTek Industries, Inc. Wed Jul 24 14:09:30 2024 Page 1

ID:d9Okus??o?Oqeo9B6tqaBuzGAgg-RfC?PsB70Hq3NSgPqnL8w3uITXbGKWrCDoi7J4zJC?f

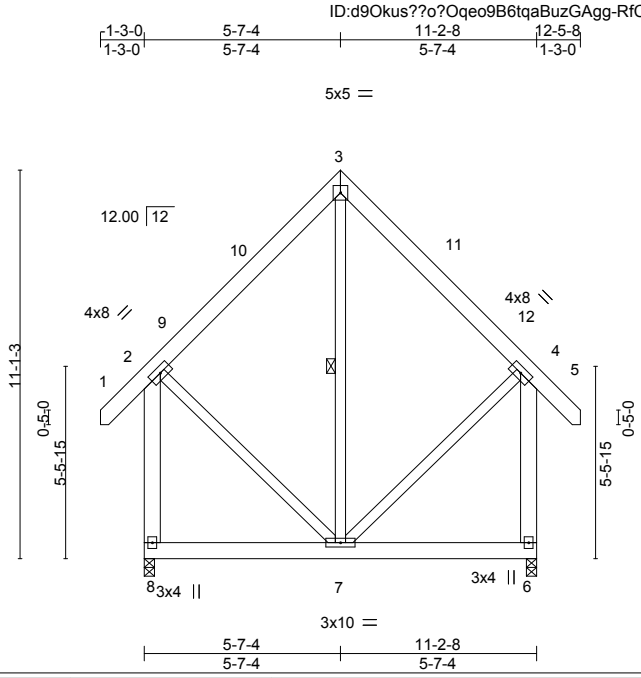

LOADING (psf)			SPACING- 2-0-0		CSI.		DEFL.	in	(loc)	l/defl	L/d	PLATES	GRIP
TCLL	20.0		Plate Grip DOL	1.15	TC	0.14	Vert(LL)	-0.00	7-8	>999	360	MT20	244/190
TCDL	10.0		Lumber DOL	1.15	BC	0.08	Vert(CT)	-0.01	7-8	>999	240		
BCLL	0.0	*	Rep Stress Incr	YES	WB	0.12	Horz(CT)	-0.00	6	n/a	n/a		
BCDL	10.0		Code IRC2015/TPI2014		Matrix-S		Wind(LL)	0.00	7-8	>999	240	Weight: 131 lb	FT = 20%

LUMBER-

TOP CHORD	2x6 SP No.1
BOT CHORD	2x6 SP No.1
WEBS	2x4 SP No.2 *Except*
	2-8,4-6: 2x6 SP No.1

BRACING-

TOP CHORD	Structural wood sheathing directly applied or 6-0-0 oc purlins, except end verticals.
BOT CHORD	Rigid ceiling directly applied or 10-0-0 oc bracing.
WEBS	1 Row at midpt 3-7

REACTIONS. (size) 8=0-3-8, 6=0-3-8
Max Horz 8=-342(LC 10)
Max Uplift 8=-39(LC 8), 6=-39(LC 9)
Max Grav 8=526(LC 20), 6=526(LC 19)

FORCES. (lb) - Max. Comp./Max. Ten. - All forces 250 (lb) or less except when shown.

TOP CHORD	2-3=-300/221, 3-4=-300/221, 2-8=-478/293, 4-6=-478/293
BOT CHORD	7-8=-335/369
WEBS	4-7=-126/250

NOTES-

1) Unbalanced roof live loads have been considered for this design.
2) Wind: ASCE 7-10; Vult=130mph Vasd=103mph; TCDL=6.0psf; BCDL=6.0psf; h=15ft; Cat. II; Exp C; Enclosed; MWFRS (envelope) and C-C Exterior(2) -1-1-2 to 3-3-11, Interior(1) 3-3-11 to 5-7-12, Exterior(2) 5-7-12 to 10-0-9, Interior(1) 10-0-9 to 12-4-10 zone; end vertical left and right exposed;C-C for members and forces & MWFRS for reactions shown; Lumber DOL=1.60 plate grip DOL=1.60
3) This truss has been designed for a 10.0 psf bottom chord live load nonconcurrent with any other live loads.
4) * This truss has been designed for a live load of 30.0psf on the bottom chord in all areas where a rectangle 3-6-0 tall by 2-0-0 wide will fit between the bottom chord and any other members.
5) Provide mechanical connection (by others) of truss to bearing plate capable of withstanding 39 lb uplift at joint 8 and 39 lb uplift at joint 6.

July 26,2024

WARNING - Verify design parameters and READ NOTES ON THIS AND INCLUDED MITEK REFERENCE PAGE MII-7473 rev. 1/2/2023 BEFORE USE.
Design valid for use only with MiTek® connectors. This design is based only upon parameters shown, and is for an individual building component, not a truss system. Before use, the building designer must verify the applicability of design parameters and properly incorporate this design into the overall building design. Bracing indicated is to prevent buckling of individual truss web and/or chord members only. Additional temporary and permanent bracing is always required for stability and to prevent collapse with possible personal injury and property damage. For general guidance regarding the fabrication, storage, delivery, erection and bracing of trusses and truss systems, see **ANSI/TPI1 Quality Criteria and DSB-22** available from Truss Plate Institute (www.tpinst.org) and **BCSI Building Component Safety Information** available from the Structural Building Component Association (www.sbcacomponents.com)

ENGINEERING BY TRENCO A MiTek Affiliate
818 Soundside Road
Edenton, NC 27932

Job	Truss	Truss Type	Qty	Ply	Lot 71 Magnolia Hills
J0125-0179	C3	COMMON	4	1	I67090951 Job Reference (optional)

Comtech, Inc, Fayetteville, NC - 28314, 8.630 s Jul 12 2024 MiTek Industries, Inc. Wed Jul 24 14:09:30 2024 Page 1
ID:d9Okus??o?Oqeo9B6tqaBuzGAgg-RfC?PsB70Hq3NSgPqnL8w3uITXbGKWrCDoi7J4zJC?f

Scale = 1:65.8

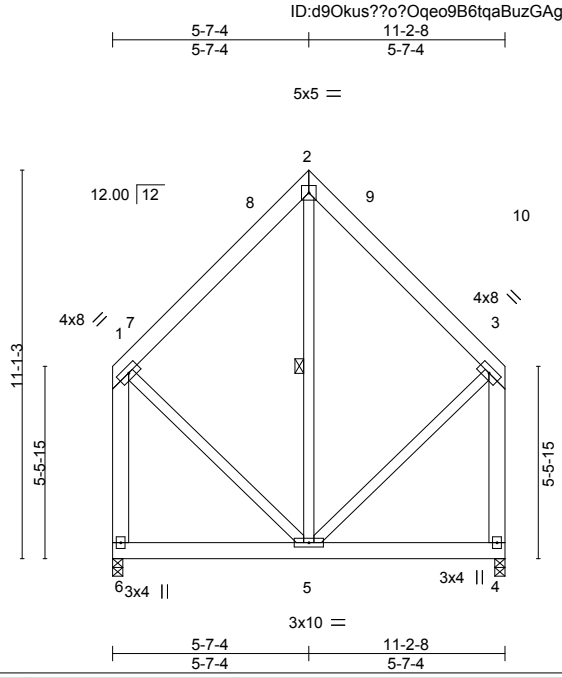

LOADING (psf)			SPACING- 2-0-0		CSI.		DEFL. in (loc) l/defl L/d				PLATES	GRIP
TCLL	20.0		Plate Grip DOL	1.15	TC	0.13	Vert(LL)	-0.00	5-6	>999	360	MT20	244/190
TCDL	10.0		Lumber DOL	1.15	BC	0.08	Vert(CT)	-0.01	5-6	>999	240		
BCLL	0.0	*	Rep Stress Incr	YES	WB	0.05	Horz(CT)	0.00	4	n/a	n/a		
BCDL	10.0		Code IRC2015/TPI2014		Matrix-S		Wind(LL)	0.00	5	>999	240	Weight: 124 lb	FT = 20%

LUMBER-
TOP CHORD 2x6 SP No.1
BOT CHORD 2x6 SP No.1
WEBS 2x4 SP No.2 *Except*
1-6,3-4: 2x6 SP No.1

BRACING-
TOP CHORD Structural wood sheathing directly applied or 6-0-0 oc purlins, except end verticals.
BOT CHORD Rigid ceiling directly applied or 10-0-0 oc bracing.
WEBS 1 Row at midpt 2-5

REACTIONS. (size) 6=0-3-8, 4=0-3-8
Max Horz 6=129(LC 9)
Max Uplift 6=-45(LC 13), 4=-45(LC 12)
Max Grav 6=433(LC 20), 4=433(LC 19)

FORCES. (lb) - Max. Comp./Max. Ten. - All forces 250 (lb) or less except when shown.
TOP CHORD 1-2=-284/158, 2-3=-284/158, 1-6=-386/145, 3-4=-386/145

NOTES-
1) Unbalanced roof live loads have been considered for this design.
2) Wind: ASCE 7-10; Vult=130mph Vasd=103mph; TCDL=6.0psf; BCDL=6.0psf; h=15ft; Cat. II; Exp C; Enclosed; MWFRS (envelope) and C-C Exterior(2) 0-3-4 to 4-8-1, Interior(1) 4-8-1 to 5-7-12, Exterior(2) 5-7-12 to 10-0-9, Interior(1) 10-0-9 to 11-0-4 zone;C-C for members and forces & MWFRS for reactions shown; Lumber DOL=1.60 plate grip DOL=1.60
3) This truss has been designed for a 10.0 psf bottom chord live load nonconcurrent with any other live loads.
4) * This truss has been designed for a live load of 30.0psf on the bottom chord in all areas where a rectangle 3-6-0 tall by 2-0-0 wide will fit between the bottom chord and any other members.
5) Provide mechanical connection (by others) of truss to bearing plate capable of withstanding 45 lb uplift at joint 6 and 45 lb uplift at joint 4.

July 26,2024

WARNING - Verify design parameters and READ NOTES ON THIS AND INCLUDED MITEK REFERENCE PAGE MII-7473 rev. 1/2/2023 BEFORE USE.
Design valid for use only with MiTek® connectors. This design is based only upon parameters shown, and is for an individual building component, not a truss system. Before use, the building designer must verify the applicability of design parameters and properly incorporate this design into the overall building design. Bracing indicated is to prevent buckling of individual truss web and/or chord members only. Additional temporary and permanent bracing is always required for stability and to prevent collapse with possible personal injury and property damage. For general guidance regarding the fabrication, storage, delivery, erection and bracing of trusses and truss systems, see **ANSI/TPI1 Quality Criteria and DSB-22** available from Truss Plate Institute (www.tpinst.org) and **BCSI Building Component Safety Information** available from the Structural Building Component Association (www.sbcacomponents.com)

ENGINEERING BY TRENCO A MiTek Affiliate
818 Soundside Road
Edenton, NC 27932

Job	Truss	Truss Type	Qty	Ply	Lot 71 Magnolia Hills
J0125-0179	D1-GE	GABLE	1	1	I67090952 Job Reference (optional)

Comtech, Inc, Fayetteville, NC - 28314, 8.630 s Jul 12 2024 MiTek Industries, Inc. Wed Jul 24 14:09:31 2024 Page 1
ID:d9Okus??o?Oqeo9B6tqaBuzGAgg-RfC?PsB70Hq3NSgPqnL8w3uITXbGKWrCDoi7J4zJC?f

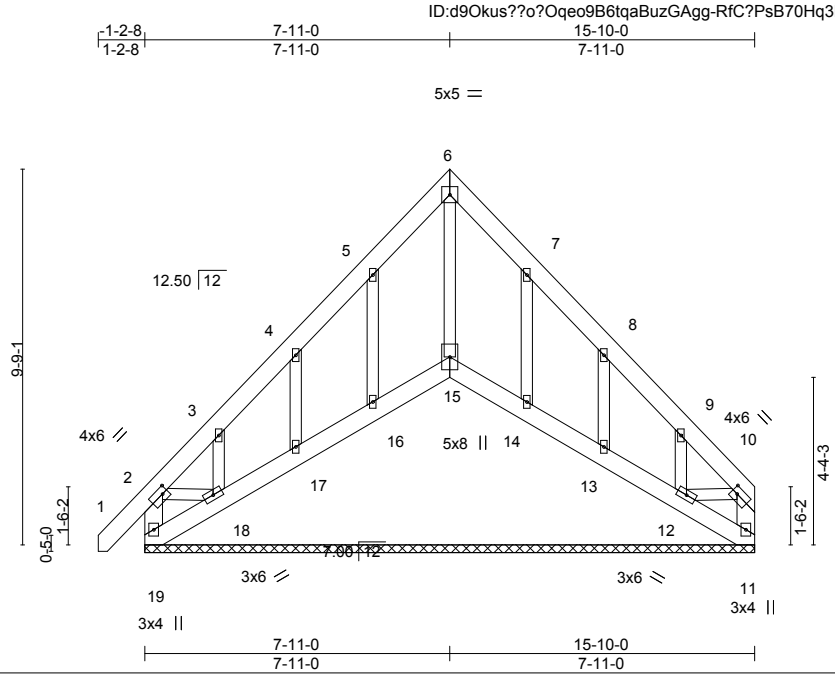

Plate Offsets (X,Y)-- [2:0-1-12,0-2-0], [10:0-1-12,0-2-0]

LOADING (psf)		SPACING- 2-0-0		CSI.		DEFL. in (loc) l/defl L/d				PLATES	GRIP
TCLL	20.0	Plate Grip DOL	1.15	TC	0.06	Vert(LL) -0.00 1 n/r 120				MT20	244/190
TCDL	10.0	Lumber DOL	1.15	BC	0.03	Vert(CT) -0.00 1 n/r 120					
BCLL	0.0 *	Rep Stress Incr	YES	WB	0.08	Horz(CT) 0.00 12 n/a n/a					
BCDL	10.0	Code IRC2015/TPI2014		Matrix-S						Weight: 141 lb	FT = 20%

LUMBER-
TOP CHORD 2x6 SP No.1
BOT CHORD 2x6 SP No.1
WEBS 2x6 SP No.1 *Except*
2-18,10-12: 2x4 SP No.2
OTHERS 2x4 SP No.2

BRACING-
TOP CHORD Structural wood sheathing directly applied or 6-0-0 oc purlins, except end verticals.
BOT CHORD Rigid ceiling directly applied or 10-0-0 oc bracing, Except: 6-0-0 oc bracing: 18-19.

REACTIONS. All bearings 15-10-0.
(lb) - Max Horz 19=270(LC 9)
Max Uplift All uplift 100 lb or less at joint(s) 11 except 19=-234(LC 8), 15=-104(LC 11), 16=-132(LC 12), 17=-162(LC 12), 18=-314(LC 12), 14=-127(LC 13), 13=-161(LC 13), 12=-291(LC 13)
Max Grav All reactions 250 lb or less at joint(s) 11, 16, 17, 18, 14, 13, 12 except 19=351(LC 20), 15=460(LC 13)

FORCES. (lb) - Max. Comp./Max. Ten. - All forces 250 (lb) or less except when shown.
TOP CHORD 2-3=-269/194
BOT CHORD 18-19=-299/288
WEBS 2-18=-150/256

NOTES-
1) Unbalanced roof live loads have been considered for this design.
2) Wind: ASCE 7-10; Vult=130mph Vasd=103mph; TCDL=6.0psf; BCDL=6.0psf; h=15ft; Cat. II; Exp C; Enclosed; MWFRS (envelope) gable end zone and C-C Exterior(2) zone;C-C for members and forces & MWFRS for reactions shown; Lumber DOL=1.60 plate grip DOL=1.60
3) Truss designed for wind loads in the plane of the truss only. For studs exposed to wind (normal to the face), see Standard Industry Gable End Details as applicable, or consult qualified building designer as per ANSI/TPI 1.
4) All plates are 2x4 MT20 unless otherwise indicated.
5) Gable requires continuous bottom chord bearing.
6) Truss to be fully sheathed from one face or securely braced against lateral movement (i.e. diagonal web).
7) Gable studs spaced at 2-0-0 oc.
8) This truss has been designed for a 10.0 psf bottom chord live load nonconcurrent with any other live loads.
9) * This truss has been designed for a live load of 30.0psf on the bottom chord in all areas where a rectangle 3-6-0 tall by 2-0-0 wide will fit between the bottom chord and any other members.
10) Provide mechanical connection (by others) of truss to bearing plate capable of withstanding 100 lb uplift at joint(s) 11 except (jt=lb) 19=234, 15=104, 16=132, 17=162, 18=314, 14=127, 13=161, 12=291.
11) Beveled plate or shim required to provide full bearing surface with truss chord at joint(s) 15, 16, 17, 18, 14, 13, 12.

July 26,2024

WARNING - Verify design parameters and READ NOTES ON THIS AND INCLUDED MITEK REFERENCE PAGE MII-7473 rev. 1/2/2023 BEFORE USE.
Design valid for use only with MiTek® connectors. This design is based only upon parameters shown, and is for an individual building component, not a truss system. Before use, the building designer must verify the applicability of design parameters and properly incorporate this design into the overall building design. Bracing indicated is to prevent buckling of individual truss web and/or chord members only. Additional temporary and permanent bracing is always required for stability and to prevent collapse with possible personal injury and property damage. For general guidance regarding the fabrication, storage, delivery, erection and bracing of trusses and truss systems, see **ANSI/TPI1 Quality Criteria and DSB-22** available from Truss Plate Institute (www.tpinst.org) and **BCSI Building Component Safety Information** available from the Structural Building Component Association (www.sbcacomponents.com)

ENGINEERING BY TRENCO A MiTek Affiliate
818 Soundside Road
Edenton, NC 27932

Job	Truss	Truss Type	Qty	Ply	Lot 71 Magnolia Hills
J0125-0179	D2	SCISSORS	7	1	I67090953 Job Reference (optional)

Comtech, Inc, Fayetteville, NC - 28314, 8.630 s Jul 12 2024 MiTek Industries, Inc. Wed Jul 24 14:09:31 2024 Page 1
ID:d9Okus??o?Oqeo9B6tqaBuzGAgg-RfC?PsB70Hq3NSgPqnL8w3uITXbGKWrCDoi7J4zJC?f

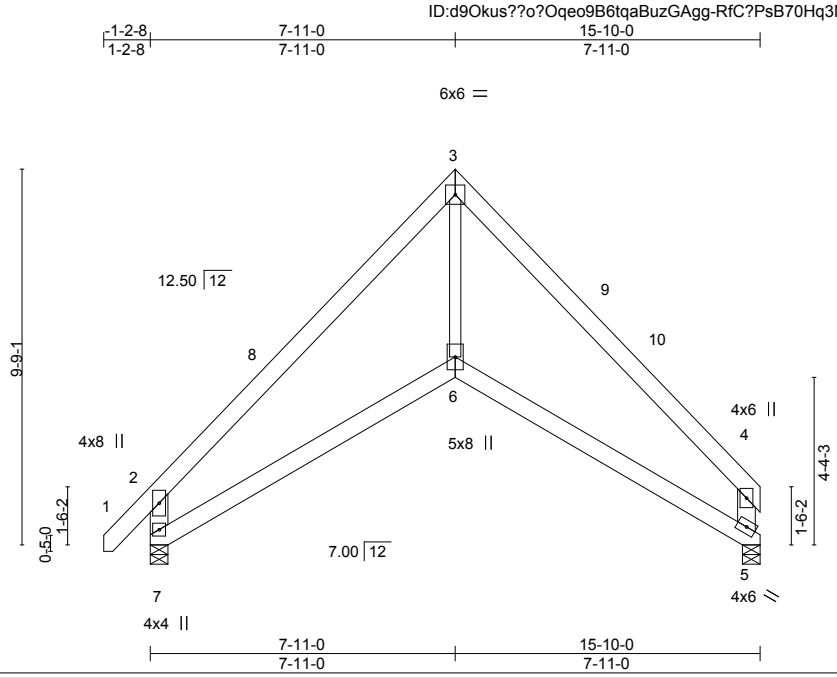

LOADING (psf)			SPACING- 2-0-0		CSI.		DEFL.	in	(loc)	l/defl	L/d	PLATES	GRIP
TCLL	20.0		Plate Grip DOL	1.15	TC	0.33	Vert(LL)	-0.06	6	>999	360	MT20	244/190
TCDL	10.0		Lumber DOL	1.15	BC	0.26	Vert(CT)	-0.13	6	>999	240		
BCLL	0.0	*	Rep Stress Incr	YES	WB	0.16	Horz(CT)	0.16	5	n/a	n/a		
BCDL	10.0		Code IRC2015/TPI2014		Matrix-R		Wind(LL)	-0.06	6-7	>999	240	Weight: 114 lb	FT = 20%

LUMBER-
TOP CHORD 2x6 SP No.1
BOT CHORD 2x6 SP No.1
WEBS 2x6 SP No.1 *Except*
3-6: 2x4 SP No.2

BRACING-
TOP CHORD Structural wood sheathing directly applied or 6-0-0 oc purlins, except end verticals.
BOT CHORD Rigid ceiling directly applied or 10-0-0 oc bracing.

REACTIONS. (size) 7=0-5-8, 5=0-5-8
Max Horz 7=262(LC 9)
Max Uplift 7=-30(LC 13), 5=-30(LC 12)
Max Grav 7=693(LC 1), 5=607(LC 1)

FORCES. (lb) - Max. Comp./Max. Ten. - All forces 250 (lb) or less except when shown.
TOP CHORD 2-3=-904/187, 3-4=-941/205, 2-7=-866/249, 4-5=-769/239
BOT CHORD 6-7=-124/681, 5-6=-102/662
WEBS 3-6=-8/736

NOTES-
1) Unbalanced roof live loads have been considered for this design.
2) Wind: ASCE 7-10; Vult=130mph Vasd=103mph; TCDL=6.0psf; BCDL=6.0psf; h=15ft; Cat. II; Exp C; Enclosed; MWFRS (envelope) and C-C Exterior(2) -1-1-1 to 3-3-11, Interior(1) 3-3-11 to 7-11-0, Exterior(2) 7-11-0 to 12-3-13, Interior(1) 12-3-13 to 15-5-12 zone; end vertical left and right exposed;C-C for members and forces & MWFRS for reactions shown; Lumber DOL=1.60 plate grip DOL=1.60
3) This truss has been designed for a 10.0 psf bottom chord live load nonconcurrent with any other live loads.
4) * This truss has been designed for a live load of 30.0psf on the bottom chord in all areas where a rectangle 3-6-0 tall by 2-0-0 wide will fit between the bottom chord and any other members.
5) Bearing at joint(s) 7, 5 considers parallel to grain value using ANSI/TPI 1 angle to grain formula. Building designer should verify capacity of bearing surface.
6) Provide mechanical connection (by others) of truss to bearing plate capable of withstanding 100 lb uplift at joint(s) 7, 5.

July 26,2024

WARNING - Verify design parameters and READ NOTES ON THIS AND INCLUDED MITEK REFERENCE PAGE MII-7473 rev. 1/2/2023 BEFORE USE.
Design valid for use only with MiTek® connectors. This design is based only upon parameters shown, and is for an individual building component, not a truss system. Before use, the building designer must verify the applicability of design parameters and properly incorporate this design into the overall building design. Bracing indicated is to prevent buckling of individual truss web and/or chord members only. Additional temporary and permanent bracing is always required for stability and to prevent collapse with possible personal injury and property damage. For general guidance regarding the fabrication, storage, delivery, erection and bracing of trusses and truss systems, see **ANSI/TPI1 Quality Criteria and DSB-22** available from Truss Plate Institute (www.tpinst.org) and **BCSI Building Component Safety Information** available from the Structural Building Component Association (www.sbcacomponents.com)

ENGINEERING BY TRENCO A MiTek Affiliate
818 Soundside Road
Edenton, NC 27932

Job	Truss	Truss Type	Qty	Ply	Lot 71 Magnolia Hills
J0125-0179	D3	COMMON	4	1	I67090954 Job Reference (optional)

Comtech, Inc, Fayetteville, NC - 28314, 8.630 s Jul 12 2024 MiTek Industries, Inc. Wed Jul 24 14:09:32 2024 Page 1
ID:d9Okus??o?Oqeo9B6tqaBuzGAgg-RfC?PsB70Hq3NSgPqnL8w3uITXbGKWrCDoi7J4zJC?f

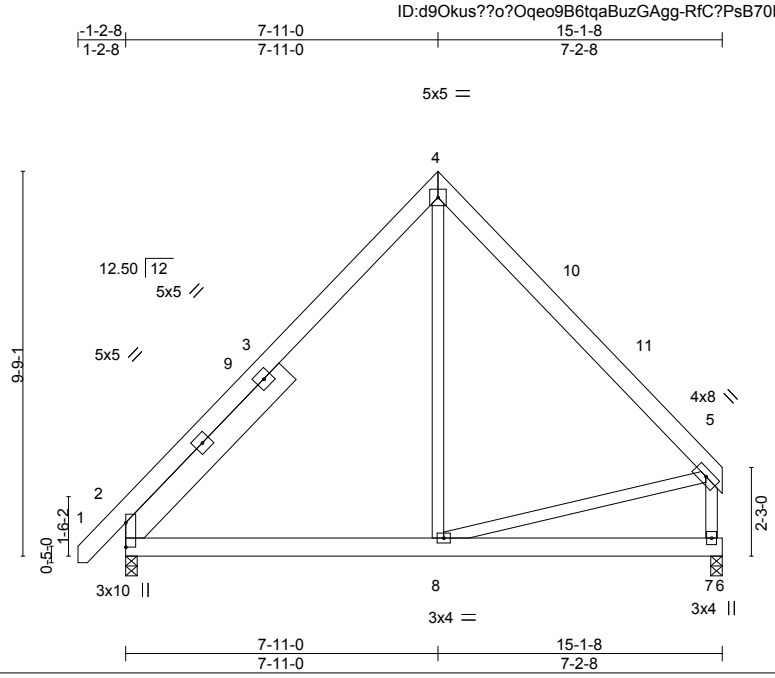

Plate Offsets (X,Y)-- [2:Edge,0-0-1]

LOADING (psf)		SPACING- 2-0-0		CSI.		DEFL. in (loc) l/defl L/d					PLATES	GRIP
TCLL	20.0	Plate Grip DOL	1.15	TC	0.35	Vert(LL)	-0.02	2-8	>999	360	MT20	244/190
TCDL	10.0	Lumber DOL	1.15	BC	0.18	Vert(CT)	-0.04	2-8	>999	240		
BCLL	0.0 *	Rep Stress Incr	YES	WB	0.07	Horz(CT)	0.00	7	n/a	n/a		
BCDL	10.0	Code IRC2015/TPI2014		Matrix-S		Wind(LL)	0.02	2-8	>999	240	Weight: 136 lb	FT = 20%

LUMBER-
TOP CHORD 2x6 SP No.1
BOT CHORD 2x6 SP No.1
WEBS 2x4 SP No.2
SLIDER Left 2x8 SP No.1 5-10-11

BRACING-
TOP CHORD Structural wood sheathing directly applied or 6-0-0 oc purlins, except end verticals.
BOT CHORD Rigid ceiling directly applied or 10-0-0 oc bracing.

REACTIONS. (size) 2=0-3-8, 7=0-3-8
Max Horz 2=223(LC 9)
Max Uplift 2=-26(LC 13), 7=-33(LC 12)
Max Grav 2=662(LC 1), 7=598(LC 1)

FORCES. (lb) - Max. Comp./Max. Ten. - All forces 250 (lb) or less except when shown.
TOP CHORD 2-4=-591/181, 4-5=-533/206, 5-7=-537/211
BOT CHORD 2-8=-21/309
WEBS 4-8=0/296, 5-8=-54/287

NOTES-
1) Unbalanced roof live loads have been considered for this design.
2) Wind: ASCE 7-10; Vult=130mph Vasd=103mph; TCDL=6.0psf; BCDL=6.0psf; h=15ft; Cat. II; Exp C; Enclosed; MWFRS (envelope) and C-C Exterior(2) -1-1-1 to 3-3-11, Interior(1) 3-3-11 to 7-11-0, Exterior(2) 7-11-0 to 12-3-13, Interior(1) 12-3-13 to 14-10-8 zone;C-C for members and forces & MWFRS for reactions shown; Lumber DOL=1.60 plate grip DOL=1.60
3) This truss has been designed for a 10.0 psf bottom chord live load nonconcurrent with any other live loads.
4) * This truss has been designed for a live load of 30.0psf on the bottom chord in all areas where a rectangle 3-6-0 tall by 2-0-0 wide will fit between the bottom chord and any other members.
5) Provide mechanical connection (by others) of truss to bearing plate capable of withstanding 100 lb uplift at joint(s) 2, 7.

July 26,2024

WARNING - Verify design parameters and READ NOTES ON THIS AND INCLUDED MITEK REFERENCE PAGE MII-7473 rev. 1/2/2023 BEFORE USE.
Design valid for use only with MiTek® connectors. This design is based only upon parameters shown, and is for an individual building component, not a truss system. Before use, the building designer must verify the applicability of design parameters and properly incorporate this design into the overall building design. Bracing indicated is to prevent buckling of individual truss web and/or chord members only. Additional temporary and permanent bracing is always required for stability and to prevent collapse with possible personal injury and property damage. For general guidance regarding the fabrication, storage, delivery, erection and bracing of trusses and truss systems, see **ANSI/TPI1 Quality Criteria and DSB-22** available from Truss Plate Institute (www.tpinst.org) and **BCSI Building Component Safety Information** available from the Structural Building Component Association (www.sbcacomponents.com)

ENGINEERING BY TRENCO A MiTek Affiliate
818 Soundside Road
Edenton, NC 27932

Job	Truss	Truss Type	Qty	Ply	Lot 71 Magnolia Hills
J0125-0179	G1-GE	ATTIC	1	1	I67090955
					Job Reference (optional)

Comtech, Inc, Fayetteville, NC - 28314, 8.630 s Jul 12 2024 MiTek Industries, Inc. Wed Jul 24 14:09:32 2024 Page 1

ID:d9Okus??o?Oqeo9B6tqaBuzGAgg-RfC?PsB70Hq3NSgPqnL8w3uITXbGKWrCDoi7J4zJC?f

1-2-8 4-3-4 7-8-13 8-2-8 11-0-0 13-9-8 14-3-3 17-8-12 22-0-0 23-2-8

1-2-8 4-3-4 3-5-9 0-5-11 2-9-8 2-9-8 0-5-11 3-5-9 4-3-4 1-2-8

Scale = 1:77.5

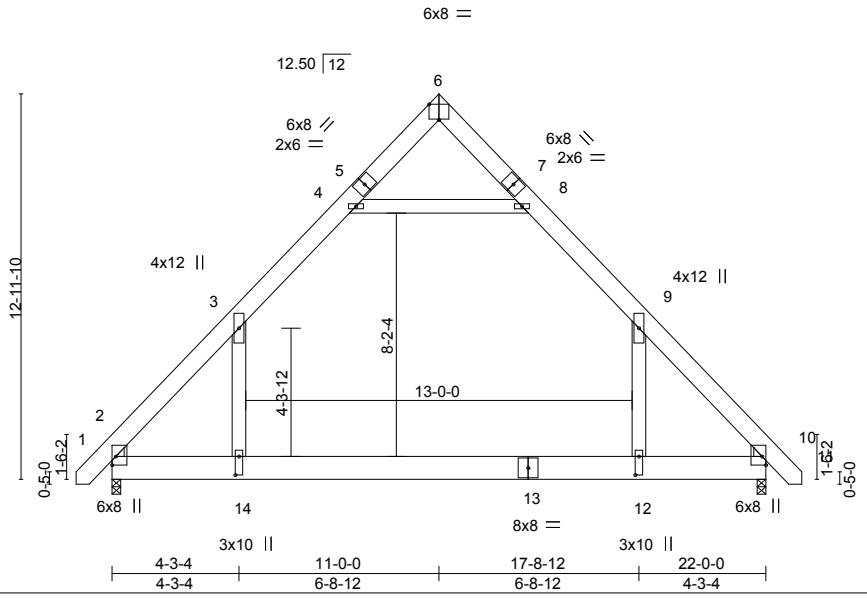

Plate Offsets (X,Y)-- [2:Edge,0-1-8], [6:Edge,0-6-5], [10:Edge,0-1-8], [12:0-7-8,0-1-8], [14:0-7-8,0-1-8]

LOADING (psf)		**SPACING-** 2-0-0	**CSI.**		**DEFL.** in (loc) l/defl L/d	**PLATES**	**GRIP**
TCLL	20.0	Plate Grip DOL 1.15	TC	0.81	Vert(LL) -0.29 12-14 >898 360	MT20	244/190
TCDL	10.0	Lumber DOL 1.15	BC	0.86	Vert(CT) -0.48 12-14 >547 240		
BCLL	0.0 *	Rep Stress Incr YES	WB	0.32	Horz(CT) 0.01 10 n/a n/a		
BCDL	10.0	Code IRC2015/TPI2014	Matrix-S		Wind(LL) 0.09 12-14 >999 240	Weight: 233 lb	FT = 20%

LUMBER-
TOP CHORD 2x8 SP No.1
BOT CHORD 2x10 SP No.1
WEBS 2x6 SP No.1
WEDGE
Left: 2x4 SP No.2 , Right: 2x4 SP No.2

BRACING-
TOP CHORD Structural wood sheathing directly applied or 4-0-12 oc purlins.
BOT CHORD Rigid ceiling directly applied or 7-6-15 oc bracing.

REACTIONS. (size) 2=0-3-8, 10=0-3-8
Max Horz 2=-379(LC 10)
Max Grav 2=1556(LC 21), 10=1556(LC 20)

FORCES. (lb) - Max. Comp./Max. Ten. - All forces 250 (lb) or less except when shown.
TOP CHORD 2-3=-2181/0, 3-4=-1099/170, 4-6=-40/294, 6-8=-40/294, 8-9=-1099/170, 9-10=-2180/0
BOT CHORD 2-14=0/1134, 12-14=0/1134, 10-12=0/1134
WEBS 9-12=0/1238, 3-14=0/1238, 4-8=-1349/228

NOTES-
1) Unbalanced roof live loads have been considered for this design.
2) Wind: ASCE 7-10; Vult=130mph Vasd=103mph; TCDL=6.0psf; BCDL=6.0psf; h=15ft; Cat. II; Exp C; Enclosed; MWFRS (envelope) gable end zone and C-C Exterior(2) zone;C-C for members and forces & MWFRS for reactions shown; Lumber DOL=1.60 plate grip DOL=1.60
3) This truss has been designed for a 10.0 psf bottom chord live load nonconcurrent with any other live loads.
4) * This truss has been designed for a live load of 30.0psf on the bottom chord in all areas where a rectangle 3-6-0 tall by 2-0-0 wide will fit between the bottom chord and any other members.
5) Ceiling dead load (10.0 psf) on member(s). 3-4, 8-9, 4-8; Wall dead load (5.0psf) on member(s).9-12, 3-14
6) Bottom chord live load (40.0 psf) and additional bottom chord dead load (10.0 psf) applied only to room. 12-14
7) Attic room checked for L/360 deflection.

NORTH CAROLINA PROFESSIONAL SEAL 036322 ENGINEER ERIC A. GILBERT

July 26,2024

WARNING - Verify design parameters and READ NOTES ON THIS AND INCLUDED MITEK REFERENCE PAGE MII-7473 rev. 1/2/2023 BEFORE USE.
Design valid for use only with MiTek® connectors. This design is based only upon parameters shown, and is for an individual building component, not a truss system. Before use, the building designer must verify the applicability of design parameters and properly incorporate this design into the overall building design. Bracing indicated is to prevent buckling of individual truss web and/or chord members only. Additional temporary and permanent bracing is always required for stability and to prevent collapse with possible personal injury and property damage. For general guidance regarding the fabrication, storage, delivery, erection and bracing of trusses and truss systems, see **ANSI/TPI1 Quality Criteria and DSB-22** available from Truss Plate Institute (www.tpinst.org) and **BCSI Building Component Safety Information** available from the Structural Building Component Association (www.sbcacomponents.com)

ENGINEERING BY TRENCO A MiTek Affiliate
818 Soundside Road
Edenton, NC 27932

Job	Truss	Truss Type	Qty	Ply	Lot 71 Magnolia Hills
J0125-0179	G2	ATTIC	6	1	I67090956 Job Reference (optional)

Comtech, Inc, Fayetteville, NC - 28314, 8.630 s Jul 12 2024 MiTek Industries, Inc. Wed Jul 24 14:09:32 2024 Page 1
ID:d9Okus??o?Oqeo9B6tqaBuzGAgg-RfC?PsB70Hq3NSgPqnL8w3uITXbGKWrCDoi7J4zJC?f

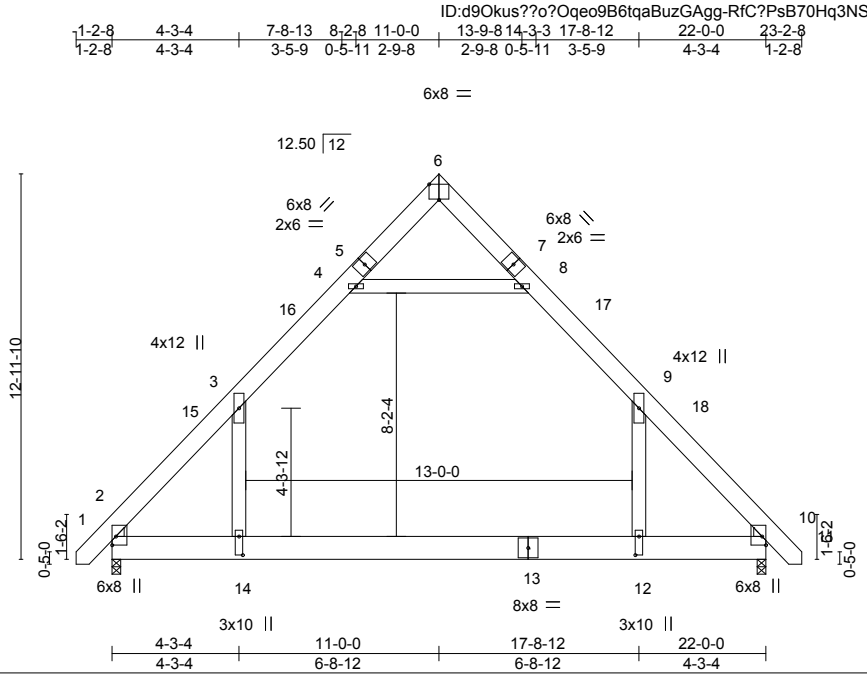

Plate Offsets (X,Y)-- [2:Edge,0-1-8], [6:Edge,0-6-5], [10:Edge,0-1-8], [12:0-7-8,0-1-8], [14:0-7-8,0-1-8]

LOADING (psf)		SPACING- 2-0-0		CSI.		DEFL.	in	(loc)	l/defl	L/d	PLATES	GRIP
TCLL	20.0	Plate Grip DOL	1.15	TC	0.81	Vert(LL)	-0.29	12-14	>898	360	MT20	244/190
TCDL	10.0	Lumber DOL	1.15	BC	0.86	Vert(CT)	-0.48	12-14	>547	240		
BCLL	0.0 *	Rep Stress Incr	YES	WB	0.32	Horz(CT)	0.01	10	n/a	n/a		
BCDL	10.0	Code IRC2015/TPI2014		Matrix-S		Wind(LL)	0.06	12-14	>999	240	Weight: 233 lb	FT = 20%

LUMBER-
TOP CHORD 2x8 SP No.1
BOT CHORD 2x10 SP No.1
WEBS 2x6 SP No.1
WEDGE
Left: 2x4 SP No.2 , Right: 2x4 SP No.2

BRACING-
TOP CHORD Structural wood sheathing directly applied or 4-1-9 oc purlins.
BOT CHORD Rigid ceiling directly applied or 7-6-15 oc bracing.

REACTIONS. (size) 2=0-3-8, 10=0-3-8
Max Horz 2=-303(LC 10)
Max Grav 2=1562(LC 21), 10=1562(LC 20)

FORCES. (lb) - Max. Comp./Max. Ten. - All forces 250 (lb) or less except when shown.
TOP CHORD 2-3=-2153/0, 3-4=-1093/155, 4-6=-40/286, 6-8=-40/286, 8-9=-1092/155, 9-10=-2152/0
BOT CHORD 2-14=0/1107, 12-14=0/1107, 10-12=0/1107
WEBS 9-12=0/1238, 3-14=0/1238, 4-8=-1357/193

NOTES-
1) Unbalanced roof live loads have been considered for this design.
2) Wind: ASCE 7-10; Vult=130mph Vasd=103mph; TCDL=6.0psf; BCDL=6.0psf; h=15ft; Cat. II; Exp C; Enclosed; MWFRS (envelope) and C-C Exterior(2) -0-11-14 to 3-4-15, Interior(1) 3-4-15 to 11-0-0, Exterior(2) 11-0-0 to 15-4-13, Interior(1) 15-4-13 to 22-11-14 zone;C-C for members and forces & MWFRS for reactions shown; Lumber DOL=1.60 plate grip DOL=1.60
3) This truss has been designed for a 10.0 psf bottom chord live load nonconcurrent with any other live loads.
4) * This truss has been designed for a live load of 30.0psf on the bottom chord in all areas where a rectangle 3-6-0 tall by 2-0-0 wide will fit between the bottom chord and any other members.
5) Ceiling dead load (10.0 psf) on member(s). 3-4, 8-9, 4-8; Wall dead load (5.0psf) on member(s).9-12, 3-14
6) Bottom chord live load (40.0 psf) and additional bottom chord dead load (10.0 psf) applied only to room. 12-14
7) Attic room checked for L/360 deflection.

July 26,2024

WARNING - Verify design parameters and READ NOTES ON THIS AND INCLUDED MITEK REFERENCE PAGE MII-7473 rev. 1/2/2023 BEFORE USE.
Design valid for use only with MiTek® connectors. This design is based only upon parameters shown, and is for an individual building component, not a truss system. Before use, the building designer must verify the applicability of design parameters and properly incorporate this design into the overall building design. Bracing indicated is to prevent buckling of individual truss web and/or chord members only. Additional temporary and permanent bracing is always required for stability and to prevent collapse with possible personal injury and property damage. For general guidance regarding the fabrication, storage, delivery, erection and bracing of trusses and truss systems, see **ANSI/TPI1 Quality Criteria and DSB-22** available from Truss Plate Institute (www.tpinst.org) and **BCSI Building Component Safety Information** available from the Structural Building Component Association (www.sbcacomponents.com)

ENGINEERING BY TRENCO A MiTek Affiliate
818 Soundside Road
Edenton, NC 27932

Job	Truss	Truss Type	Qty	Ply	Lot 71 Magnolia Hills
J0125-0179	G3	ATTIC	6	1	I67090957 Job Reference (optional)

Comtech, Inc, Fayetteville, NC - 28314, 8.630 s Jul 12 2024 MiTek Industries, Inc. Wed Jul 24 14:09:33 2024 Page 1
ID:d9Okus??o?Oqeo9B6tqaBuzGAgg-RfC?PsB70Hq3NSgPqnL8w3uITXbGKWrCDoi7J4zJC?f

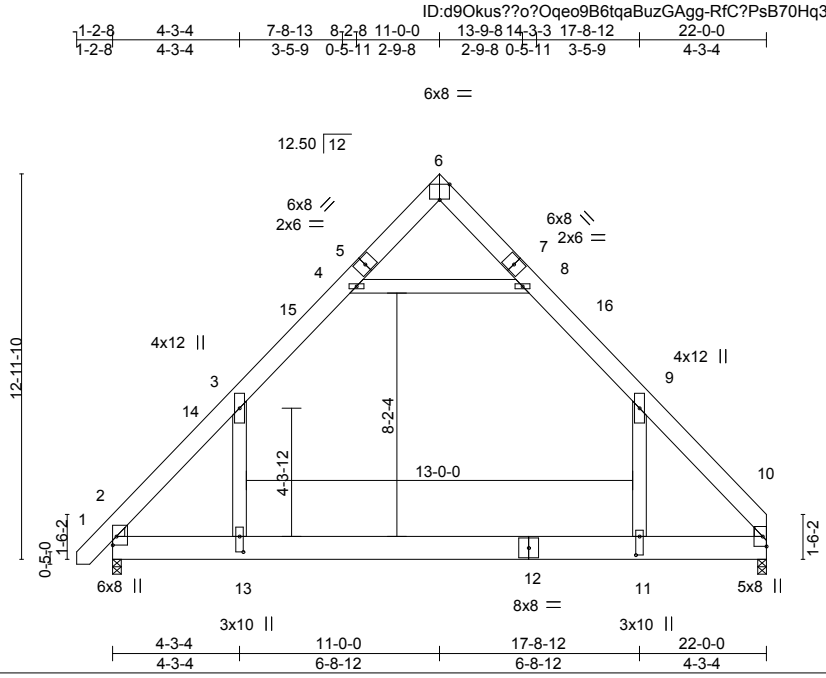

Plate Offsets (X,Y)-- [2:Edge,0-1-8], [6:Edge,0-6-5], [11:0-7-8,0-1-8], [13:0-6-4,0-1-8]

LOADING (psf)		**SPACING-** 2-0-0	**CSI.**		**DEFL.** in (loc) l/defl L/d	**PLATES**	**GRIP**
TCLL	20.0	Plate Grip DOL 1.15	TC	0.82	Vert(LL) -0.29 11-13 >888 360	MT20	244/190
TCDL	10.0	Lumber DOL 1.15	BC	0.86	Vert(CT) -0.48 11-13 >541 240		
BCLL	0.0 *	Rep Stress Incr YES	WB	0.32	Horz(CT) 0.01 10 n/a n/a		
BCDL	10.0	Code IRC2015/TPI2014	Matrix-S		Wind(LL) 0.07 11-13 >999 240	Weight: 229 lb	FT = 20%

LUMBER-
TOP CHORD 2x8 SP No.1
BOT CHORD 2x10 SP No.1
WEBS 2x6 SP No.1
WEDGE
Left: 2x4 SP No.2 , Right: 2x4 SP No.2

BRACING-
TOP CHORD Structural wood sheathing directly applied or 4-0-12 oc purlins.
BOT CHORD Rigid ceiling directly applied or 7-5-9 oc bracing.

REACTIONS. (size) 2=0-3-8, 10=0-3-8
Max Horz 2=300(LC 11)
Max Grav 2=1564(LC 21), 10=1518(LC 20)

FORCES. (lb) - Max. Comp./Max. Ten. - All forces 250 (lb) or less except when shown.
TOP CHORD 2-3=-2159/0, 3-4=-1092/156, 4-6=-36/291, 6-8=-38/287, 8-9=-1095/158, 9-10=-2114/0
BOT CHORD 2-13=0/1104, 11-13=0/1104, 10-11=0/1104
WEBS 9-11=0/1183, 3-13=0/1244, 4-8=-1363/201

NOTES-
1) Unbalanced roof live loads have been considered for this design.
2) Wind: ASCE 7-10; Vult=130mph Vasd=103mph; TCDL=6.0psf; BCDL=6.0psf; h=15ft; Cat. II; Exp C; Enclosed; MWFRS (envelope) and C-C Exterior(2) -0-11-14 to 3-4-15, Interior(1) 3-4-15 to 11-0-0, Exterior(2) 11-0-0 to 15-4-13, Interior(1) 15-4-13 to 21-10-4 zone;C-C for members and forces & MWFRS for reactions shown; Lumber DOL=1.60 plate grip DOL=1.60
3) This truss has been designed for a 10.0 psf bottom chord live load nonconcurrent with any other live loads.
4) * This truss has been designed for a live load of 30.0psf on the bottom chord in all areas where a rectangle 3-6-0 tall by 2-0-0 wide will fit between the bottom chord and any other members.
5) Ceiling dead load (10.0 psf) on member(s). 3-4, 8-9, 4-8; Wall dead load (5.0psf) on member(s).9-11, 3-13
6) Bottom chord live load (40.0 psf) and additional bottom chord dead load (10.0 psf) applied only to room. 11-13
7) Attic room checked for L/360 deflection.

July 26,2024

WARNING - Verify design parameters and READ NOTES ON THIS AND INCLUDED MITEK REFERENCE PAGE MII-7473 rev. 1/2/2023 BEFORE USE.
Design valid for use only with MiTek® connectors. This design is based only upon parameters shown, and is for an individual building component, not a truss system. Before use, the building designer must verify the applicability of design parameters and properly incorporate this design into the overall building design. Bracing indicated is to prevent buckling of individual truss web and/or chord members only. Additional temporary and permanent bracing is always required for stability and to prevent collapse with possible personal injury and property damage. For general guidance regarding the fabrication, storage, delivery, erection and bracing of trusses and truss systems, see **ANSI/TPI1 Quality Criteria and DSB-22** available from Truss Plate Institute (www.tpinst.org) and **BCSI Building Component Safety Information** available from the Structural Building Component Association (www.sbcacomponents.com)

ENGINEERING BY TRENCO A MiTek Affiliate
818 Soundside Road
Edenton, NC 27932

Job	Truss	Truss Type	Qty	Ply	Lot 71 Magnolia Hills
J0125-0179	G5	ATTIC	1	1	I67090958 Job Reference (optional)

Comtech, Inc, Fayetteville, NC - 28314, 8.630 s Jul 12 2024 MiTek Industries, Inc. Wed Jul 24 14:09:33 2024 Page 1
ID:d9Okus??o?Oqeo9B6tqaBuzGAgg-RfC?PsB70Hq3NSgPqnL8w3uITXbGKWrCDoi7J4zJC?f

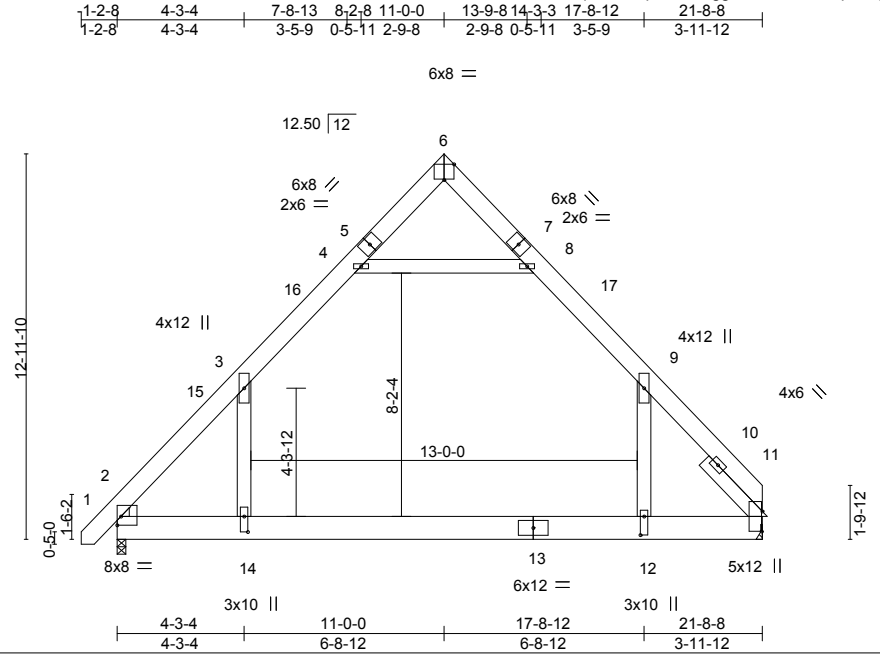

Plate Offsets (X,Y)-- [2:Edge,0-3-9], [6:Edge,0-6-5], [11:0-8-1,0-0-5], [12:0-7-8,0-1-8], [14:0-6-4,0-1-8]

LOADING (psf)		SPACING- 2-0-0		CSI.		DEFL.	in	(loc)	l/defl	L/d	PLATES	GRIP
TCLL	20.0	Plate Grip DOL	1.15	TC	0.85	Vert(LL)	-0.28	12-14	>925	360	MT20	244/190
TCDL	10.0	Lumber DOL	1.15	BC	0.85	Vert(CT)	-0.46	12-14	>566	240		
BCLL	0.0 *	Rep Stress Incr	YES	WB	0.32	Horz(CT)	0.01	11	n/a	n/a		
BCDL	10.0	Code IRC2015/TPI2014		Matrix-S		Wind(LL)	0.06	12-14	>999	240	Weight: 232 lb	FT = 20%

LUMBER-
TOP CHORD 2x8 SP No.1
BOT CHORD 2x10 SP No.1
WEBS 2x6 SP No.1
WEDGE
Left: 2x4 SP No.2
SLIDER Right 2x6 SP No.1 2-9-15

BRACING-
TOP CHORD Structural wood sheathing directly applied or 2-4-4 oc purlins.
BOT CHORD Rigid ceiling directly applied or 7-9-4 oc bracing.

REACTIONS. (size) 2=0-3-8, 11=Mechanical
Max Horz 2=300(LC 9)
Max Grav 2=1565(LC 21), 11=1518(LC 20)

FORCES. (lb) - Max. Comp./Max. Ten. - All forces 250 (lb) or less except when shown.
TOP CHORD 2-3=-2155/0, 3-4=-1101/157, 4-6=-46/276, 6-8=-39/286, 8-9=-1089/160, 9-11=-2143/0
BOT CHORD 2-14=0/1105, 12-14=0/1105, 11-12=0/1105
WEBS 9-12=0/1213, 3-14=0/1228, 4-8=-1354/203

NOTES-
1) Unbalanced roof live loads have been considered for this design.
2) Wind: ASCE 7-10; Vult=130mph Vasd=103mph; TCDL=6.0psf; BCDL=6.0psf; h=15ft; Cat. II; Exp C; Enclosed; MWFRS (envelope) and C-C Exterior(2) -0-11-14 to 3-4-15, Interior(1) 3-4-15 to 11-0-0, Exterior(2) 11-0-0 to 15-4-13, Interior(1) 15-4-13 to 21-10-8 zone;C-C for members and forces & MWFRS for reactions shown; Lumber DOL=1.60 plate grip DOL=1.60
3) This truss has been designed for a 10.0 psf bottom chord live load nonconcurrent with any other live loads.
4) * This truss has been designed for a live load of 30.0psf on the bottom chord in all areas where a rectangle 3-6-0 tall by 2-0-0 wide will fit between the bottom chord and any other members.
5) Ceiling dead load (10.0 psf) on member(s). 3-4, 8-9, 4-8; Wall dead load (5.0psf) on member(s).9-12, 3-14
6) Bottom chord live load (40.0 psf) and additional bottom chord dead load (10.0 psf) applied only to room. 12-14
7) Refer to girder(s) for truss to truss connections.
8) Attic room checked for L/360 deflection.

July 26,2024

WARNING - Verify design parameters and READ NOTES ON THIS AND INCLUDED MITEK REFERENCE PAGE MII-7473 rev. 1/2/2023 BEFORE USE.
Design valid for use only with MiTek® connectors. This design is based only upon parameters shown, and is for an individual building component, not a truss system. Before use, the building designer must verify the applicability of design parameters and properly incorporate this design into the overall building design. Bracing indicated is to prevent buckling of individual truss web and/or chord members only. Additional temporary and permanent bracing is always required for stability and to prevent collapse with possible personal injury and property damage. For general guidance regarding the fabrication, storage, delivery, erection and bracing of trusses and truss systems, see **ANSI/TPI1 Quality Criteria and DSB-22** available from Truss Plate Institute (www.tpinst.org) and **BCSI Building Component Safety Information** available from the Structural Building Component Association (www.sbcacomponents.com)

ENGINEERING BY TRENCO A MiTek Affiliate
818 Soundside Road
Edenton, NC 27932

Job	Truss	Truss Type	Qty	Ply	Lot 71 Magnolia Hills
J0125-0179	G6	ROOF SPECIAL	6	1	I67090959 Job Reference (optional)

Comtech, Inc, Fayetteville, NC - 28314, 8.630 s Jul 12 2024 MiTek Industries, Inc. Wed Jul 24 14:09:34 2024 Page 1
ID:d9Okus??o?Oqeo9B6tqaBuzGAgg-RfC?PsB70Hq3NSgPqnL8w3uITXbGKWrCDoi7J4zJC?f

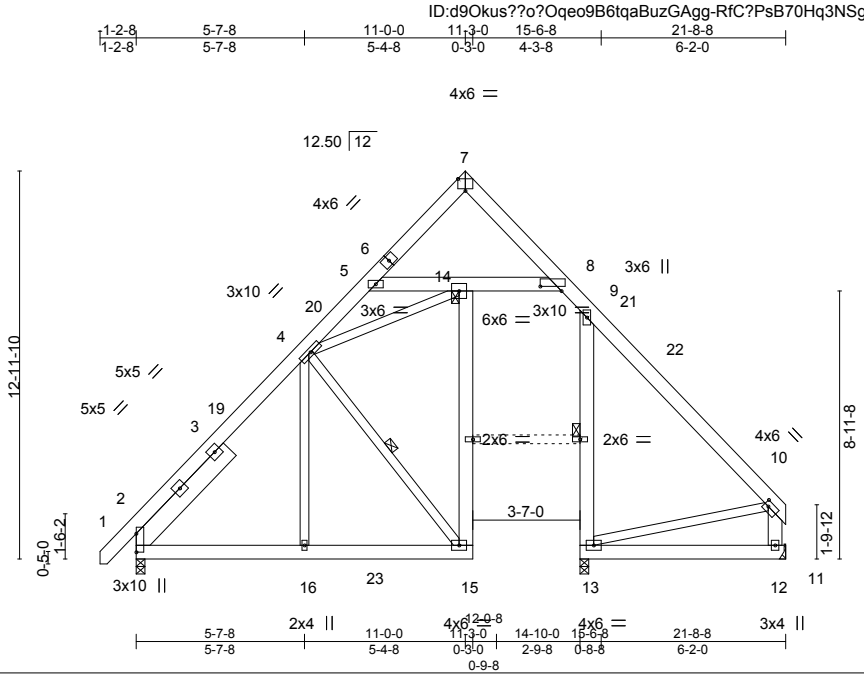

Plate Offsets (X,Y)-- [2:Edge,0-0-0], [7:Edge,0-4-13], [8:0-8-8,0-1-14], [10:0-1-12,0-2-0]

LOADING (psf)		SPACING- 2-0-0		CSI.		DEFL. in (loc) l/defl L/d				PLATES	GRIP
TCLL	20.0	Plate Grip DOL	1.15	TC	0.36	Vert(LL) -0.09 5-14 >999 360				MT20	244/190
TCDL	10.0	Lumber DOL	1.15	BC	0.68	Vert(CT) -0.20 5-14 >894 240					
BCLL	0.0 *	Rep Stress Incr	YES	WB	0.22	Horz(CT) 0.22 12 n/a n/a					
BCDL	10.0	Code IRC2015/TPI2014		Matrix-S		Wind(LL) 0.11 5-14 >999 240				Weight: 235 lb	FT = 20%

LUMBER-
TOP CHORD 2x6 SP No.1
BOT CHORD 2x6 SP No.1
WEBS 2x4 SP No.2 *Except*
10-12: 2x6 SP No.1
SLIDER Left 2x8 SP No.1 4-5-13

BRACING-
TOP CHORD Structural wood sheathing directly applied or 6-0-0 oc purlins, except end verticals.
BOT CHORD Rigid ceiling directly applied or 10-0-0 oc bracing. Except:
6-0-0 oc bracing: 9-13
8-11-0 oc bracing: 8-14
WEBS 1 Row at midpt 4-15
JOINTS 1 Brace at Jt(s): 14

REACTIONS. (size) 2=0-3-8, 13=0-3-8, 12=Mechanical
Max Horz 2=302(LC 9)
Max Uplift 2=-93(LC 13), 12=-144(LC 13)
Max Grav 2=663(LC 20), 13=1034(LC 19), 12=234(LC 20)

FORCES. (lb) - Max. Comp./Max. Ten. - All forces 250 (lb) or less except when shown.
TOP CHORD 2-4=-678/235, 4-5=-741/76, 5-7=-282/38, 7-8=-332/64, 8-9=-541/273, 9-10=-182/251
BOT CHORD 2-16=-113/444, 15-16=-113/444, 14-15=-112/598, 8-14=-172/377, 9-13=-970/31
WEBS 4-15=-671/177, 4-14=-112/547

NOTES-
1) Unbalanced roof live loads have been considered for this design.
2) Wind: ASCE 7-10; Vult=130mph Vasd=103mph; TCDL=6.0psf; BCDL=6.0psf; h=15ft; Cat. II; Exp C; Enclosed; MWFRS (envelope) and C-C Exterior(2) -1-1-1 to 3-3-11, Interior(1) 3-3-11 to 11-0-0, Exterior(2) 11-0-0 to 15-4-13, Interior(1) 15-4-13 to 21-4-4 zone;C-C for members and forces & MWFRS for reactions shown; Lumber DOL=1.60 plate grip DOL=1.60
3) This truss has been designed for a 10.0 psf bottom chord live load nonconcurrent with any other live loads.
4) * This truss has been designed for a live load of 30.0psf on the bottom chord in all areas where a rectangle 3-6-0 tall by 2-0-0 wide will fit between the bottom chord and any other members, with BCDL = 10.0psf.
5) Refer to girder(s) for truss to truss connections.
6) Provide mechanical connection (by others) of truss to bearing plate capable of withstanding 100 lb uplift at joint(s) 2 except (jt=lb) 12=144.

July 26,2024

WARNING - Verify design parameters and READ NOTES ON THIS AND INCLUDED MITEK REFERENCE PAGE MII-7473 rev. 1/2/2023 BEFORE USE.
Design valid for use only with MiTek® connectors. This design is based only upon parameters shown, and is for an individual building component, not a truss system. Before use, the building designer must verify the applicability of design parameters and properly incorporate this design into the overall building design. Bracing indicated is to prevent buckling of individual truss web and/or chord members only. Additional temporary and permanent bracing is always required for stability and to prevent collapse with possible personal injury and property damage. For general guidance regarding the fabrication, storage, delivery, erection and bracing of trusses and truss systems, see **ANSI/TPI1 Quality Criteria and DSB-22** available from Truss Plate Institute (www.tpinst.org) and **BCSI Building Component Safety Information** available from the Structural Building Component Association (www.sbcacomponents.com)

ENGINEERING BY TRENCO A MiTek Affiliate
818 Soundside Road
Edenton, NC 27932

Job	Truss	Truss Type	Qty	Ply	Lot 71 Magnolia Hills
J0125-0179	G7-GE	ROOF SPECIAL	1	1	I67090960 Job Reference (optional)

Comtech, Inc, Fayetteville, NC - 28314, 8.630 s Jul 12 2024 MiTek Industries, Inc. Wed Jul 24 14:09:34 2024 Page 1

ID:d9Okus??o?Oqeo9B6tqaBuzGAgg-RfC?PsB70Hq3NSgPqnL8w3uITXbGKWrCDoi7J4zJC?f

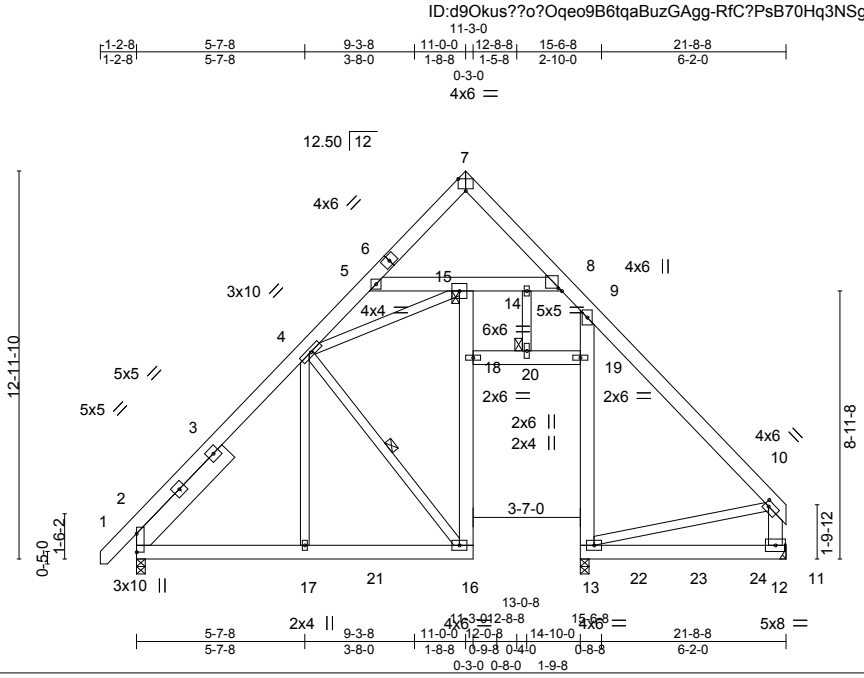

Scale = 1:77.0

Plate Offsets (X,Y)-- [2:Edge,0-0-0], [7:Edge,0-4-13], [8:0-1-7,0-1-2], [10:0-1-12,0-2-0]

LOADING (psf)		SPACING- 2-0-0		CSI.		DEFL.	in	(loc)	l/defl	L/d	PLATES	GRIP
TCLL	20.0	Plate Grip DOL	1.15	TC	0.45	Vert(LL)	-0.08	5-15	>999	360	MT20	244/190
TCDL	10.0	Lumber DOL	1.15	BC	0.64	Vert(CT)	-0.19	5-15	>938	240		
BCLL	0.0 *	Rep Stress Incr	NO	WB	0.22	Horz(CT)	0.22	12	n/a	n/a		
BCDL	10.0	Code IRC2015/TPI2014		Matrix-S		Wind(LL)	0.11	5-15	>999	240	Weight: 241 lb	FT = 20%

LUMBER-

TOP CHORD 2x6 SP No.1
BOT CHORD 2x6 SP No.1
WEBS 2x4 SP No.2 *Except*
10-12,18-19: 2x6 SP No.1
SLIDER Left 2x8 SP No.1 4-4-13

BRACING-

TOP CHORD Structural wood sheathing directly applied or 6-0-0 oc purlins, except end verticals.
BOT CHORD Rigid ceiling directly applied or 10-0-0 oc bracing, Except: 6-0-0 oc bracing: 13-19.
WEBS 1 Row at midpt 4-16
JOINTS 1 Brace at Jt(s): 15, 20

REACTIONS. (size) 2=0-3-8, 13=0-3-8, 12=Mechanical
Max Horz 2=374(LC 5)
Max Uplift 2=-180(LC 9), 13=-144(LC 8), 12=-274(LC 9)
Max Grav 2=701(LC 34), 13=1308(LC 33), 12=685(LC 20)

FORCES. (lb) - Max. Comp./Max. Ten. - All forces 250 (lb) or less except when shown.
TOP CHORD 2-4=-756/255, 4-5=-835/108, 5-7=-273/52, 7-8=-336/105, 8-9=-670/248, 9-10=-185/254, 10-12=-187/259
BOT CHORD 2-17=-165/510, 16-17=-165/509, 16-18=-178/622, 15-18=-163/612, 5-15=-276/115, 14-15=-142/328, 8-14=-142/328, 13-19=-966/148, 9-19=-977/164, 12-13=-108/349
WEBS 10-13=-327/106, 4-16=-677/265, 4-15=-127/596, 18-20=-49/267, 19-20=-49/267

NOTES-

1) Unbalanced roof live loads have been considered for this design.
2) Wind: ASCE 7-10; Vult=130mph Vasd=103mph; TCDL=6.0psf; BCDL=6.0psf; h=15ft; Cat. II; Exp C; Enclosed; MWFRS (envelope) gable end zone; Lumber DOL=1.60 plate grip DOL=1.60
3) This truss has been designed for a 10.0 psf bottom chord live load nonconcurrent with any other live loads.
4) * This truss has been designed for a live load of 30.0psf on the bottom chord in all areas where a rectangle 3-6-0 tall by 2-0-0 wide will fit between the bottom chord and any other members, with BCDL = 10.0psf.
5) Refer to girder(s) for truss to truss connections.
6) Provide mechanical connection (by others) of truss to bearing plate capable of withstanding 100 lb uplift at joint(s) except (jt=lb) 2=180, 13=144, 12=274.
7) Hanger(s) or other connection device(s) shall be provided sufficient to support concentrated load(s) 312 lb down and 37 lb up at 16-8-0, and 289 lb down and 34 lb up at 18-8-0, and 248 lb down and 67 lb up at 20-8-0 on bottom chord. The design/selection of such connection device(s) is the responsibility of others.
8) In the LOAD CASE(S) section, loads applied to the face of the truss are noted as front (F) or back (B).

LOAD CASE(S) Standard
1) Dead + Roof Live (balanced): Lumber Increase=1.15, Plate Increase=1.15
Uniform Loads (plf)
Vert: 1-7=-60, 7-10=-60, 2-16=-20, 5-15=-20, 8-15=-20, 11-13=-20
Concentrated Loads (lb)
Vert: 22=-284(B) 23=-289(B) 24=-248(B)

July 26,2024

WARNING - Verify design parameters and READ NOTES ON THIS AND INCLUDED MITEK REFERENCE PAGE MII-7473 rev. 1/2/2023 BEFORE USE.
Design valid for use only with MiTek® connectors. This design is based only upon parameters shown, and is for an individual building component, not a truss system. Before use, the building designer must verify the applicability of design parameters and properly incorporate this design into the overall building design. Bracing indicated is to prevent buckling of individual truss web and/or chord members only. Additional temporary and permanent bracing is always required for stability and to prevent collapse with possible personal injury and property damage. For general guidance regarding the fabrication, storage, delivery, erection and bracing of trusses and truss systems, see **ANSI/TPI1 Quality Criteria and DSB-22** available from Truss Plate Institute (www.tpinst.org) and **BCSI Building Component Safety Information** available from the Structural Building Component Association (www.sbcacomponents.com)

ENGINEERING BY TRENCO A MiTek Affiliate
818 Soundside Road
Edenton, NC 27932

Job	Truss	Truss Type	Qty	Ply	Lot 71 Magnolia Hills
J0125-0179	H1	HALF HIP GIRDER	1	1	I67090961 Job Reference (optional)

Comtech, Inc, Fayetteville, NC - 28314, 8.630 s Jul 12 2024 MiTek Industries, Inc. Wed Jul 24 14:09:35 2024 Page 1
ID:d9Okus??o?Oqeo9B6tqaBuzGAgg-RfC?PsB70Hq3NSgPqnL8w3uITXbGKWrCDoi7J4zJC?f

-1-2-8	3-0-8	6-1-0	10-10-0	16-0-8
1-2-8	3-0-8	3-0-8	4-9-0	5-2-8

Scale = 1:29.8

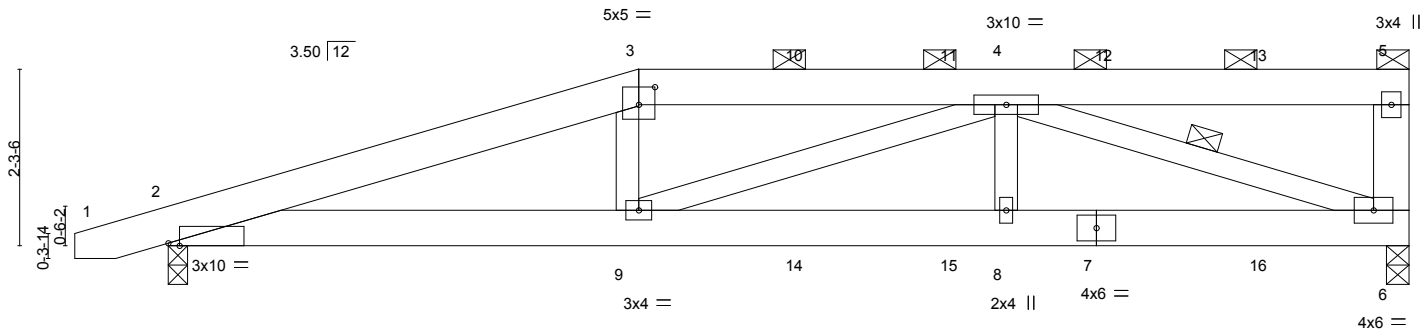

3-0-8	6-1-0	10-10-0	16-0-8
3-0-8	3-0-8	4-9-0	5-2-8

Plate Offsets (X,Y)-- [2:0-1-12,Edge], [3:0-2-8,0-2-12]

LOADING (psf)		**SPACING-** 2-0-0	**CSI.**		**DEFL.**	in	(loc)	l/defl	L/d	**PLATES**	**GRIP**
TCLL	20.0	Plate Grip DOL 1.15	TC	0.29	Vert(LL)	0.11	8-9	>999	240	MT20	244/190
TCDL	10.0	Lumber DOL 1.15	BC	0.45	Vert(CT)	-0.16	8-9	>999	240		
BCLL	0.0 *	Rep Stress Incr NO	WB	0.39	Horz(CT)	0.04	6	n/a	n/a		
BCDL	10.0	Code IRC2015/TPI2014	Matrix-S							Weight: 100 lb	FT = 20%

LUMBER-
TOP CHORD 2x6 SP No.1
BOT CHORD 2x6 SP No.1
WEBS 2x4 SP No.2 *Except*
5-6: 2x6 SP No.1

BRACING-
TOP CHORD Structural wood sheathing directly applied or 4-3-6 oc purlins, except end verticals, and 2-0-0 oc purlins (4-5-0 max.): 3-5.
BOT CHORD Rigid ceiling directly applied or 7-2-4 oc bracing.
WEBS 1 Row at midpt 4-6

REACTIONS. (size) 6=0-3-8, 2=0-3-0
Max Horz 2=71(LC 19)
Max Uplift 6=-512(LC 4), 2=-490(LC 4)
Max Grav 6=1219(LC 1), 2=1175(LC 1)

FORCES. (lb) - Max. Comp./Max. Ten. - All forces 250 (lb) or less except when shown.
TOP CHORD 2-3=-3039/1239, 3-4=-2825/1190, 5-6=-258/100
BOT CHORD 2-9=-1204/2856, 8-9=-1042/2473, 6-8=-1042/2473
WEBS 3-9=-185/484, 4-6=-2449/1032, 4-8=-86/382, 4-9=-158/375

NOTES-
1) Wind: ASCE 7-10; Vult=130mph Vasd=103mph; TCDL=6.0psf; BCDL=6.0psf; h=15ft; Cat. II; Exp C; Enclosed; MWFRS (envelope); porch left and right exposed; Lumber DOL=1.60 plate grip DOL=1.60
2) Provide adequate drainage to prevent water ponding.
3) This truss has been designed for a 10.0 psf bottom chord live load nonconcurrent with any other live loads.
4) * This truss has been designed for a live load of 30.0psf on the bottom chord in all areas where a rectangle 3-6-0 tall by 2-0-0 wide will fit between the bottom chord and any other members.
5) Provide mechanical connection (by others) of truss to bearing plate capable of withstanding 100 lb uplift at joint(s) except (jt=lb) 6=512, 2=490.
6) Graphical purlin representation does not depict the size or the orientation of the purlin along the top and/or bottom chord.
7) Hanger(s) or other connection device(s) shall be provided sufficient to support concentrated load(s) 108 lb down and 81 lb up at 6-1-0, 108 lb down and 81 lb up at 8-1-12, 108 lb down and 81 lb up at 10-1-12, and 108 lb down and 81 lb up at 12-1-12, and 108 lb down and 81 lb up at 14-1-12 on top chord, and 380 lb down and 234 lb up at 6-1-0, 78 lb down and 50 lb up at 8-1-12, 78 lb down and 50 lb up at 10-1-12, and 78 lb down and 50 lb up at 12-1-12, and 78 lb down and 50 lb up at 14-1-12 on bottom chord. The design/selection of such connection device(s) is the responsibility of others.
8) In the LOAD CASE(S) section, loads applied to the face of the truss are noted as front (F) or back (B).

LOAD CASE(S) Standard
1) Dead + Roof Live (balanced): Lumber Increase=1.15, Plate Increase=1.15
Uniform Loads (plf)
Vert: 1-3=-60, 3-5=-60, 2-6=-20
Concentrated Loads (lb)
Vert: 3=-108(B) 7=-39(B) 9=-380(B) 10=-108(B) 11=-108(B) 12=-108(B) 13=-108(B) 14=-39(B) 15=-39(B) 16=-39(B)

NORTH CAROLINA PROFESSIONAL SEAL 036322 ENGINEER ERIC A. GILBERT

July 26,2024

WARNING - Verify design parameters and READ NOTES ON THIS AND INCLUDED MITEK REFERENCE PAGE MII-7473 rev. 1/2/2023 BEFORE USE.
Design valid for use only with MiTek® connectors. This design is based only upon parameters shown, and is for an individual building component, not a truss system. Before use, the building designer must verify the applicability of design parameters and properly incorporate this design into the overall building design. Bracing indicated is to prevent buckling of individual truss web and/or chord members only. Additional temporary and permanent bracing is always required for stability and to prevent collapse with possible personal injury and property damage. For general guidance regarding the fabrication, storage, delivery, erection and bracing of trusses and truss systems, see **ANSI/TPI1 Quality Criteria and DSB-22** available from Truss Plate Institute (www.tpinst.org) and **BCSI Building Component Safety Information** available from the Structural Building Component Association (www.sbcacomponents.com)

ENGINEERING BY TRENCO A MiTek Affiliate
818 Soundside Road
Edenton, NC 27932

Job	Truss	Truss Type	Qty	Ply	Lot 71 Magnolia Hills
J0125-0179	K1	Flat Girder	1	2	I67090962 Job Reference (optional)

Comtech, Inc, Fayetteville, NC - 28314, 8.630 s Jul 12 2024 MiTek Industries, Inc. Wed Jul 24 14:09:35 2024 Page 1
ID:d9Okus??o?Oqeo9B6tqaBuzGAgg-RfC?PsB70Hq3NSgPqnL8w3uITXbGKWrCDoi7J4zJC?f

8-3-10	16-5-7	24-9-1
8-3-10	8-1-14	8-3-10

Scale = 1:42.7

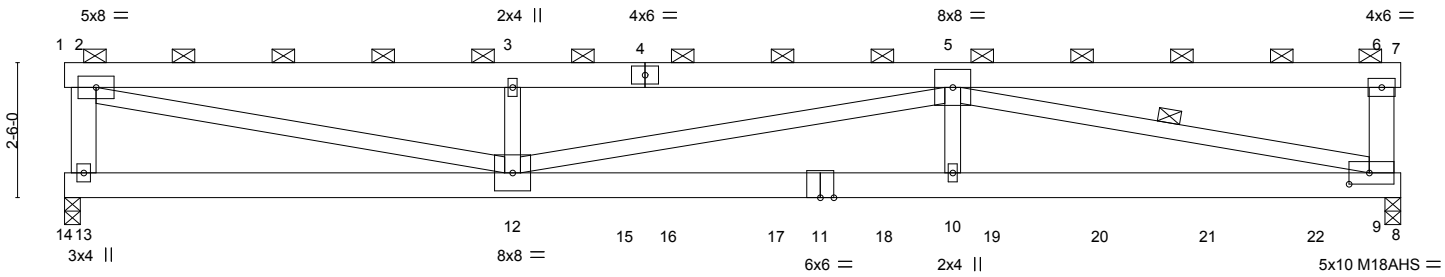

8-3-10	16-5-7	24-9-1
8-3-10	8-1-14	8-3-10

Plate Offsets (X,Y)-- [9:0-4-8,0-2-8]

LOADING (psf)		SPACING- 2-0-0		CSI.		DEFL.	in	(loc)	l/defl	L/d	PLATES	GRIP
TCLL	20.0	Plate Grip DOL	1.15	TC	0.53	Vert(LL)	-0.27	10-12	>999	360	MT20	244/190
TCDL	10.0	Lumber DOL	1.15	BC	0.94	Vert(CT)	-0.49	10-12	>587	240	M18AHS	186/179
BCLL	0.0 *	Rep Stress Incr	NO	WB	0.70	Horz(CT)	0.05	9	n/a	n/a		
BCDL	10.0	Code IRC2015/TPI2014		Matrix-S		Wind(LL)	0.36	10-12	>812	240	Weight: 325 lb	FT = 20%

LUMBER-
TOP CHORD 2x6 SP No.1
BOT CHORD 2x6 SP No.1
WEBS 2x4 SP No.2 *Except*
2-13,6-9: 2x6 SP No.1

BRACING-
TOP CHORD 2-0-0 oc purlins (6-0-0 max.): 1-7, except end verticals.
BOT CHORD Rigid ceiling directly applied or 10-0-0 oc bracing.
WEBS 1 Row at midpt 5-9

REACTIONS. (size) 13=0-3-8, 9=0-3-8
Max Uplift 13=-576(LC 4), 9=-411(LC 5)
Max Grav 13=1799(LC 1), 9=3077(LC 2)

FORCES. (lb) - Max. Comp./Max. Ten. - All forces 250 (lb) or less except when shown.
TOP CHORD 2-13=-1740/660, 2-3=-5897/2190, 3-5=-5897/2190, 5-6=-923/79, 6-9=-337/122
BOT CHORD 12-13=-61/344, 10-12=-2464/6419, 9-10=-2464/6419
WEBS 2-12=-2198/5733, 3-12=-440/184, 5-12=-751/309, 5-10=-548/1245, 5-9=-5698/2463

NOTES-
1) 2-ply truss to be connected together with 10d (0.131"x3") nails as follows:
Top chords connected as follows: 2x6 - 2 rows staggered at 0-9-0 oc.
Bottom chords connected as follows: 2x6 - 2 rows staggered at 0-6-0 oc.
Webs connected as follows: 2x4 - 1 row at 0-9-0 oc.
2) All loads are considered equally applied to all plies, except if noted as front (F) or back (B) face in the LOAD CASE(S) section. Ply to ply connections have been provided to distribute only loads noted as (F) or (B), unless otherwise indicated.
3) Wind: ASCE 7-10; Vult=130mph Vasd=103mph; TCDL=6.0psf; BCDL=6.0psf; h=15ft; Cat. II; Exp C; Enclosed; MWFRS (envelope); Lumber DOL=1.60 plate grip DOL=1.60
4) Provide adequate drainage to prevent water ponding.
5) All plates are MT20 plates unless otherwise indicated.
6) This truss has been designed for a 10.0 psf bottom chord live load nonconcurrent with any other live loads.
7) * This truss has been designed for a live load of 30.0psf on the bottom chord in all areas where a rectangle 3-6-0 tall by 2-0-0 wide will fit between the bottom chord and any other members.
8) Provide mechanical connection (by others) of truss to bearing plate capable of withstanding 100 lb uplift at joint(s) except (jt=lb) 13=576, 9=411.
9) Graphical purlin representation does not depict the size or the orientation of the purlin along the top and/or bottom chord.
10) Hanger(s) or other connection device(s) shall be provided sufficient to support concentrated load(s) 665 lb down and 294 lb up at 10-4-9, 200 lb down and 164 lb up at 11-2-4, 200 lb down and 164 lb up at 13-2-4, 200 lb down and 164 lb up at 15-2-4, 200 lb down and 164 lb up at 17-2-4, 200 lb down and 164 lb up at 19-2-4, and 200 lb down and 164 lb up at 21-2-4, and 1463 lb down at 23-2-4 on bottom chord. The design/selection of such connection device(s) is the responsibility of others.

LOAD CASE(S) Standard
1) Dead + Roof Live (balanced): Lumber Increase=1.15, Plate Increase=1.15

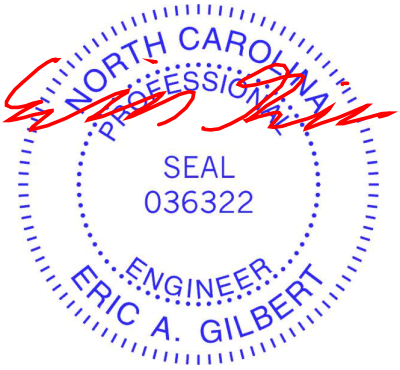

July 26,2024

Continued on page 2

WARNING - Verify design parameters and READ NOTES ON THIS AND INCLUDED MITEK REFERENCE PAGE MII-7473 rev. 1/2/2023 BEFORE USE.
Design valid for use only with MiTek® connectors. This design is based only upon parameters shown, and is for an individual building component, not a truss system. Before use, the building designer must verify the applicability of design parameters and properly incorporate this design into the overall building design. Bracing indicated is to prevent buckling of individual truss web and/or chord members only. Additional temporary and permanent bracing is always required for stability and to prevent collapse with possible personal injury and property damage. For general guidance regarding the fabrication, storage, delivery, erection and bracing of trusses and truss systems, see **ANSI/TPI1 Quality Criteria and DSB-22** available from Truss Plate Institute (www.tpinst.org) and **BCSI Building Component Safety Information** available from the Structural Building Component Association (www.sbcacomponents.com)

ENGINEERING BY TRENCO A MiTek Affiliate
818 Soundside Road
Edenton, NC 27932

LOAD CASE(S) Standard

Uniform Loads (plf)

Vert: 1-2=-60, 2-6=-60, 6-7=-60, 8-14=-20

Concentrated Loads (lb)

Vert: 15=-665(F) 16=-177(F) 17=-177(F) 18=-177(F) 19=-177(F) 20=-177(F) 21=-177(F) 22=-1168(F)

WARNING - Verify design parameters and READ NOTES ON THIS AND INCLUDED MITEK REFERENCE PAGE MII-7473 rev. 1/2/2023 BEFORE USE.
Design valid for use only with MiTek® connectors. This design is based only upon parameters shown, and is for an individual building component, not a truss system. Before use, the building designer must verify the applicability of design parameters and properly incorporate this design into the overall building design. Bracing indicated is to prevent buckling of individual truss web and/or chord members only. Additional temporary and permanent bracing is always required for stability and to prevent collapse with possible personal injury and property damage. For general guidance regarding the fabrication, storage, delivery, erection and bracing of trusses and truss systems, see **ANSI/TPI1 Quality Criteria and DSB-22** available from Truss Plate Institute (www.tpinst.org) and **BCSI Building Component Safety Information** available from the Structural Building Component Association (www.sbcacomponents.com)

ENGINEERING BY TRENCO A MiTek Affiliate
818 Soundside Road
Edenton, NC 27932

Job	Truss	Truss Type	Qty	Ply	Lot 71 Magnolia Hills
J0125-0179	M1	ROOF SPECIAL	1	1	I67090963 Job Reference (optional)

Comtech, Inc, Fayetteville, NC - 28314, 8.630 s Jul 12 2024 MiTek Industries, Inc. Wed Jul 24 14:09:36 2024 Page 1

ID:d9Okus??o?Oqeo9B6tqaBuzGAgg-RfC?PsB70Hq3NSgPqnL8w3uITXbGKWrCDoi7J4zJC?f

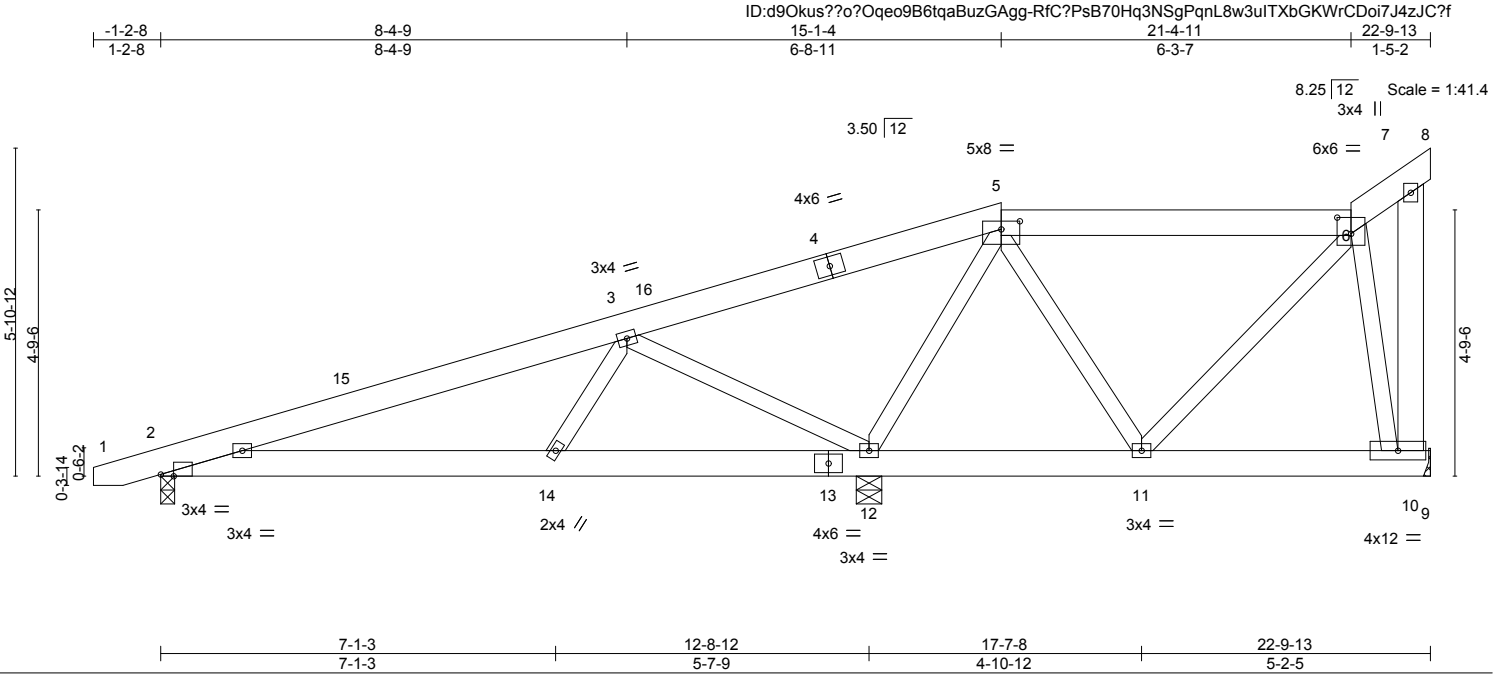

Plate Offsets (X,Y)-- [2:0-2-13,Edge], [5:0-4-0,0-1-12], [6:0-3-0,0-3-8]

LOADING (psf)		SPACING- 2-0-0		CSI.		DEFL.	in	(loc)	l/defl	L/d	PLATES	GRIP
TCLL	20.0	Plate Grip DOL	1.15	TC	0.28	Vert(LL)	0.04	2-14	>999	240	MT20	244/190
TCDL	10.0	Lumber DOL	1.15	BC	0.17	Vert(CT)	-0.04	2-14	>999	240		
BCLL	0.0 *	Rep Stress Incr	YES	WB	0.39	Horz(CT)	0.00	12	n/a	n/a		
BCDL	10.0	Code IRC2015/TPI2014		Matrix-S							Weight: 163 lb	FT = 20%

LUMBER-

TOP CHORD 2x6 SP No.1
BOT CHORD 2x6 SP No.1
WEBS 2x4 SP No.2 *Except*
7-10: 2x6 SP No.1

BRACING-

TOP CHORD Structural wood sheathing directly applied or 6-0-0 oc purlins, except end verticals, and 2-0-0 oc purlins (6-0-0 max.): 5-6.
BOT CHORD Rigid ceiling directly applied or 10-0-0 oc bracing, Except: 6-0-0 oc bracing: 11-12.

REACTIONS. (size) 10=Mechanical, 2=0-3-0, 12=0-5-8
Max Horz 2=180(LC 12)
Max Uplift 10=-47(LC 12), 2=-172(LC 8), 12=-347(LC 8)
Max Grav 10=268(LC 1), 2=455(LC 1), 12=1156(LC 1)

FORCES. (lb) - Max. Comp./Max. Ten. - All forces 250 (lb) or less except when shown.
TOP CHORD 2-3=-511/339, 3-5=-425/463
BOT CHORD 2-14=-502/429, 12-14=-328/340
WEBS 3-14=-357/324, 3-12=-856/738, 5-12=-705/403, 6-10=-255/81

NOTES-

1) Wind: ASCE 7-10; Vult=130mph Vasd=103mph; TCDL=6.0psf; BCDL=6.0psf; h=15ft; Cat. II; Exp C; Enclosed; MWFRS (envelope) and C-C Exterior(2) -0-11-5 to 3-5-8, Interior(1) 3-5-8 to 15-1-4, Exterior(2) 15-1-4 to 21-4-11, Interior(1) 21-4-11 to 22-9-13 zone; porch left exposed;C-C for members and forces & MWFRS for reactions shown; Lumber DOL=1.60 plate grip DOL=1.60
2) Provide adequate drainage to prevent water ponding.
3) This truss has been designed for a 10.0 psf bottom chord live load nonconcurrent with any other live loads.
4) * This truss has been designed for a live load of 30.0psf on the bottom chord in all areas where a rectangle 3-6-0 tall by 2-0-0 wide will fit between the bottom chord and any other members.
5) Refer to girder(s) for truss to truss connections.
6) Provide mechanical connection (by others) of truss to bearing plate capable of withstanding 100 lb uplift at joint(s) 10 except (jt=lb) 2=172, 12=347.
7) Graphical purlin representation does not depict the size or the orientation of the purlin along the top and/or bottom chord.

July 26,2024

WARNING - Verify design parameters and READ NOTES ON THIS AND INCLUDED MITEK REFERENCE PAGE MII-7473 rev. 1/2/2023 BEFORE USE.
Design valid for use only with MiTek® connectors. This design is based only upon parameters shown, and is for an individual building component, not a truss system. Before use, the building designer must verify the applicability of design parameters and properly incorporate this design into the overall building design. Bracing indicated is to prevent buckling of individual truss web and/or chord members only. Additional temporary and permanent bracing is always required for stability and to prevent collapse with possible personal injury and property damage. For general guidance regarding the fabrication, storage, delivery, erection and bracing of trusses and truss systems, see **ANSI/TPI1 Quality Criteria and DSB-22** available from Truss Plate Institute (www.tpinst.org) and **BCSI Building Component Safety Information** available from the Structural Building Component Association (www.sbcacomponents.com)

ENGINEERING BY TRENCO A MiTek Affiliate
818 Soundside Road
Edenton, NC 27932

Job	Truss	Truss Type	Qty	Ply	Lot 71 Magnolia Hills
J0125-0179	M2	HALF HIP	1	1	I67090964 Job Reference (optional)

Comtech, Inc, Fayetteville, NC - 28314, 8.630 s Jul 12 2024 MiTek Industries, Inc. Wed Jul 24 14:09:36 2024 Page 1
ID:d9Okus??o?Oqeo9B6tqaBuzGAgg-RfC?PsB70Hq3NSgPqnL8w3uITXbGKWrCDoi7J4zJC?f

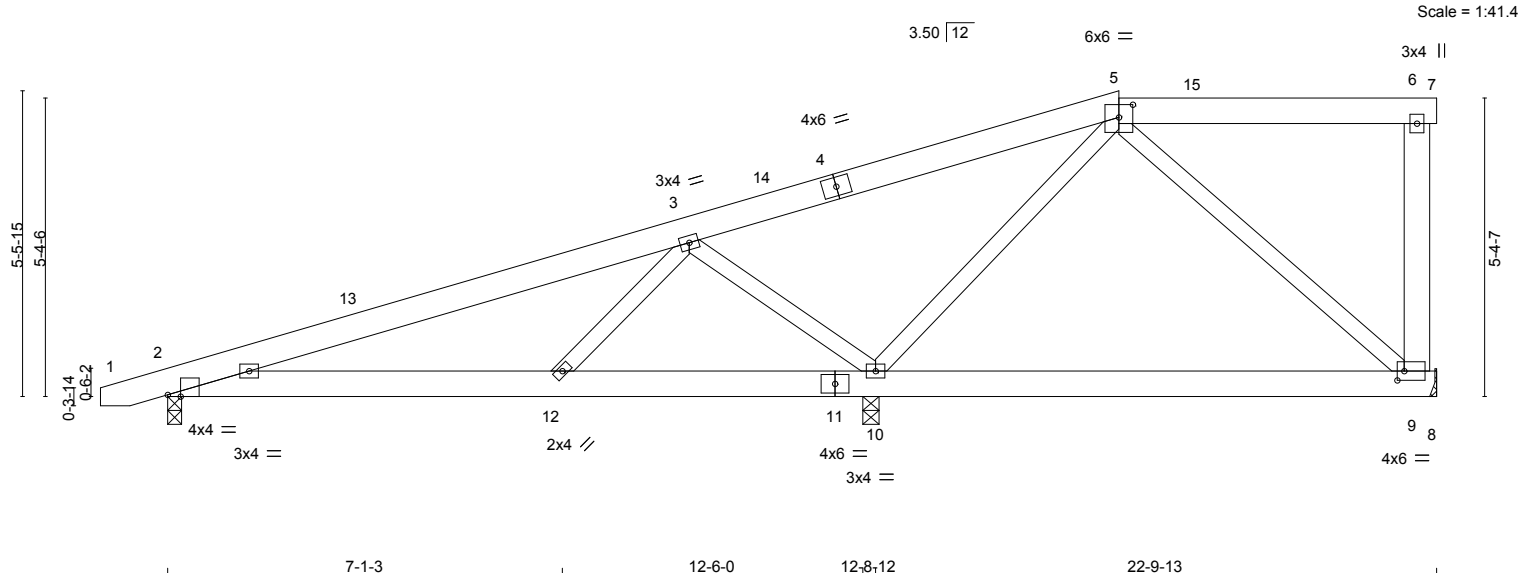

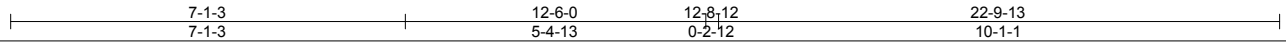

Plate Offsets (X,Y)-- [2:0-2-13,Edge], [5:0-3-0,0-2-12], [9:0-1-8,0-2-0]

LOADING (psf)		SPACING- 2-0-0		CSI.		DEFL.	in	(loc)	l/defl	L/d	PLATES	GRIP
TCLL	20.0	Plate Grip DOL	1.15	TC	0.35	Vert(LL)	-0.05	9-10	>999	360	MT20	244/190
TCDL	10.0	Lumber DOL	1.15	BC	0.21	Vert(CT)	-0.10	9-10	>999	240		
BCLL	0.0 *	Rep Stress Incr	YES	WB	0.44	Horz(CT)	0.00	9	n/a	n/a		
BCDL	10.0	Code IRC2015/TPI2014		Matrix-S		Wind(LL)	0.04	2-12	>999	240	Weight: 152 lb	FT = 20%

LUMBER-
TOP CHORD 2x6 SP No.1
BOT CHORD 2x6 SP No.1
WEBS 2x4 SP No.2 *Except*
6-9: 2x6 SP No.1

BRACING-
TOP CHORD Structural wood sheathing directly applied or 6-0-0 oc purlins, except end verticals, and 2-0-0 oc purlins (6-0-0 max.): 5-7.
BOT CHORD Rigid ceiling directly applied or 10-0-0 oc bracing, Except: 6-0-0 oc bracing: 9-10.

REACTIONS. (size) 9=Mechanical, 2=0-3-0, 10=0-3-8
Max Horz 2=171(LC 8)
Max Uplift 9=-14(LC 9), 2=-175(LC 8), 10=-332(LC 8)
Max Grav 9=309(LC 24), 2=472(LC 23), 10=1118(LC 23)

FORCES. (lb) - Max. Comp./Max. Ten. - All forces 250 (lb) or less except when shown.
TOP CHORD 2-3=-513/375, 3-5=-373/391
BOT CHORD 2-12=-506/424, 10-12=-209/293
WEBS 3-12=-453/319, 3-10=-807/662, 5-10=-574/440

NOTES-
1) Unbalanced roof live loads have been considered for this design.
2) Wind: ASCE 7-10; Vult=130mph Vasd=103mph; TCDL=6.0psf; BCDL=6.0psf; h=15ft; Cat. II; Exp C; Enclosed; MWFRS (envelope) and C-C Exterior(2) -0-11-5 to 3-5-8, Interior(1) 3-5-8 to 17-1-4, Exterior(2) 17-1-4 to 22-9-13 zone; porch left exposed;C-C for members and forces & MWFRS for reactions shown; Lumber DOL=1.60 plate grip DOL=1.60
3) Provide adequate drainage to prevent water ponding.
4) This truss has been designed for a 10.0 psf bottom chord live load nonconcurrent with any other live loads.
5) * This truss has been designed for a live load of 30.0psf on the bottom chord in all areas where a rectangle 3-6-0 tall by 2-0-0 wide will fit between the bottom chord and any other members.
6) Refer to girder(s) for truss to truss connections.
7) Provide mechanical connection (by others) of truss to bearing plate capable of withstanding 100 lb uplift at joint(s) 9 except (jt=lb) 2=175, 10=332.
8) Graphical purlin representation does not depict the size or the orientation of the purlin along the top and/or bottom chord.

July 26,2024

WARNING - Verify design parameters and READ NOTES ON THIS AND INCLUDED MITEK REFERENCE PAGE MII-7473 rev. 1/2/2023 BEFORE USE.
Design valid for use only with MiTek® connectors. This design is based only upon parameters shown, and is for an individual building component, not a truss system. Before use, the building designer must verify the applicability of design parameters and properly incorporate this design into the overall building design. Bracing indicated is to prevent buckling of individual truss web and/or chord members only. Additional temporary and permanent bracing is always required for stability and to prevent collapse with possible personal injury and property damage. For general guidance regarding the fabrication, storage, delivery, erection and bracing of trusses and truss systems, see **ANSI/TPI1 Quality Criteria and DSB-22** available from Truss Plate Institute (www.tpinst.org) and **BCSI Building Component Safety Information** available from the Structural Building Component Association (www.sbcacomponents.com)

ENGINEERING BY TRENCO A MiTek Affiliate
818 Soundside Road
Edenton, NC 27932

Job	Truss	Truss Type	Qty	Ply	Lot 71 Magnolia Hills
J0125-0179	M3	HALF HIP	1	1	I67090965 Job Reference (optional)

Comtech, Inc, Fayetteville, NC - 28314, 8.630 s Jul 12 2024 MiTek Industries, Inc. Wed Jul 24 14:09:37 2024 Page 1
ID:d9Okus??o?Oqeo9B6tqaBuzGAgg-RfC?PsB70Hq3NSgPqnL8w3uITXbGKWrCDoi7J4zJC?f

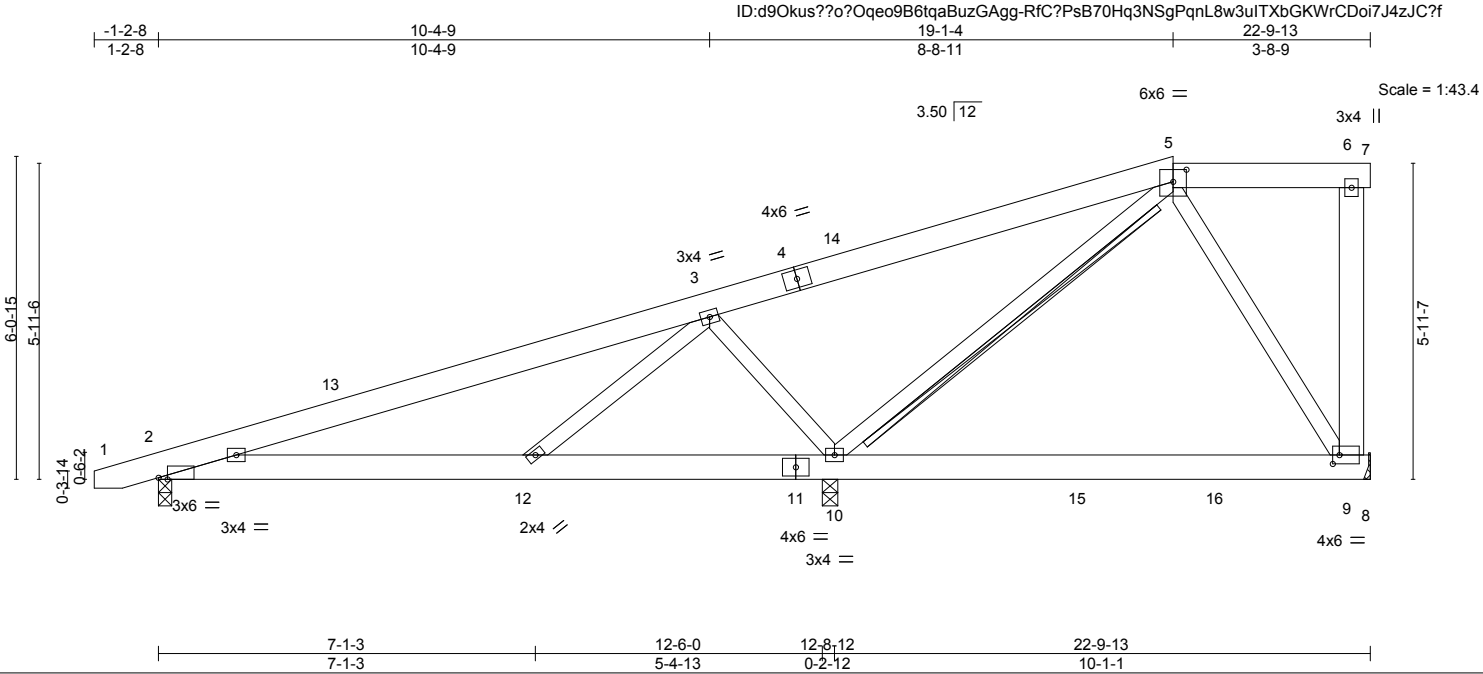

Plate Offsets (X,Y)-- [2:0-2-1,Edge], [5:0-3-0,0-2-12], [9:0-1-8,0-2-0]

LOADING (psf)		SPACING- 2-0-0		CSI.		DEFL.	in	(loc)	l/defl	L/d	PLATES	GRIP
TCLL	20.0	Plate Grip DOL	1.15	TC	0.43	Vert(LL)	-0.07	9-10	>999	360	MT20	244/190
TCDL	10.0	Lumber DOL	1.15	BC	0.27	Vert(CT)	-0.12	9-10	>977	240		
BCLL	0.0 *	Rep Stress Incr	YES	WB	0.21	Horz(CT)	0.00	9	n/a	n/a		
BCDL	10.0	Code IRC2015/TPI2014		Matrix-S		Wind(LL)	0.05	2-12	>999	240	Weight: 156 lb	FT = 20%

LUMBER-
TOP CHORD 2x6 SP No.1
BOT CHORD 2x6 SP No.1
WEBS 2x4 SP No.2 *Except*
6-9: 2x6 SP No.1

BRACING-
TOP CHORD Structural wood sheathing directly applied or 6-0-0 oc purlins, except end verticals, and 2-0-0 oc purlins (6-0-0 max.): 5-7.
BOT CHORD Rigid ceiling directly applied or 10-0-0 oc bracing.
WEBS T-Brace: 2x4 SPF No.2 - 5-10
Fasten (2X) T and I braces to narrow edge of web with 10d (0.131"x3") nails, 6in o.c.,with 3in minimum end distance. Brace must cover 90% of web length.

REACTIONS. (size) 9=Mechanical, 2=0-3-0, 10=0-3-8
Max Horz 2=190(LC 8)
Max Uplift 9=-17(LC 12), 2=-176(LC 8), 10=-321(LC 8)
Max Grav 9=332(LC 2), 2=483(LC 23), 10=1093(LC 23)

FORCES. (lb) - Max. Comp./Max. Ten. - All forces 250 (lb) or less except when shown.
TOP CHORD 2-3=-503/370, 3-5=-313/320
BOT CHORD 2-12=-512/408
WEBS 3-12=-521/366, 3-10=-787/594, 5-10=-452/359

NOTES-
1) Unbalanced roof live loads have been considered for this design.
2) Wind: ASCE 7-10; Vult=130mph Vasd=103mph; TCDL=6.0psf; BCDL=6.0psf; h=15ft; Cat. II; Exp C; Enclosed; MWFRS (envelope) and C-C Exterior(2) -0-11-5 to 3-5-8, Interior(1) 3-5-8 to 19-1-4, Exterior(2) 19-1-4 to 22-9-13 zone; porch left exposed;C-C for members and forces & MWFRS for reactions shown; Lumber DOL=1.60 plate grip DOL=1.60
3) Provide adequate drainage to prevent water ponding.
4) This truss has been designed for a 10.0 psf bottom chord live load nonconcurrent with any other live loads.
5) * This truss has been designed for a live load of 30.0psf on the bottom chord in all areas where a rectangle 3-6-0 tall by 2-0-0 wide will fit between the bottom chord and any other members, with BCDL = 10.0psf.
6) Refer to girder(s) for truss to truss connections.
7) Provide mechanical connection (by others) of truss to bearing plate capable of withstanding 100 lb uplift at joint(s) 9 except (jt=lb) 2=176, 10=321.
8) Graphical purlin representation does not depict the size or the orientation of the purlin along the top and/or bottom chord.
9) Warning: Additional permanent and stability bracing for truss system (not part of this component design) is always required.

July 26,2024

WARNING - Verify design parameters and READ NOTES ON THIS AND INCLUDED MITEK REFERENCE PAGE MII-7473 rev. 1/2/2023 BEFORE USE.
Design valid for use only with MiTek® connectors. This design is based only upon parameters shown, and is for an individual building component, not a truss system. Before use, the building designer must verify the applicability of design parameters and properly incorporate this design into the overall building design. Bracing indicated is to prevent buckling of individual truss web and/or chord members only. Additional temporary and permanent bracing is always required for stability and to prevent collapse with possible personal injury and property damage. For general guidance regarding the fabrication, storage, delivery, erection and bracing of trusses and truss systems, see **ANSI/TPI1 Quality Criteria and DSB-22** available from Truss Plate Institute (www.tpinst.org) and **BCSI Building Component Safety Information** available from the Structural Building Component Association (www.sbcacomponents.com)

ENGINEERING BY TRENCO A MiTek Affiliate
818 Soundside Road
Edenton, NC 27932

Job	Truss	Truss Type	Qty	Ply	Lot 71 Magnolia Hills
J0125-0179	P1	MONOPITCH	4	1	I67090966 Job Reference (optional)

Comtech, Inc, Fayetteville, NC - 28314, 8.630 s Jul 12 2024 MiTek Industries, Inc. Wed Jul 24 14:09:37 2024 Page 1
ID:d9Okus??o?Oqeo9B6tqaBuzGAgg-RfC?PsB70Hq3NSgPqnL8w3uITXbGKWrCDoi7J4zJC?f

Scale: 1/4"=1'

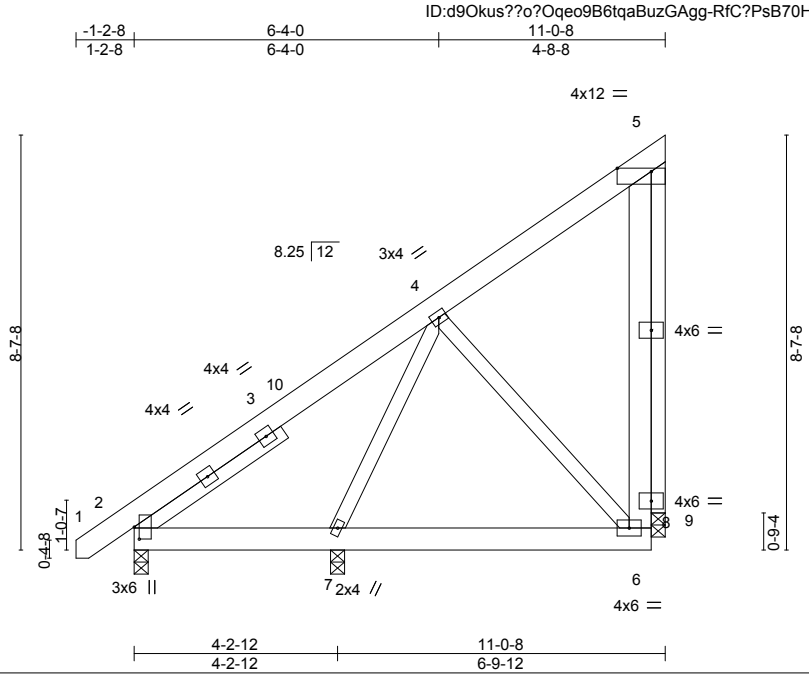

Plate Offsets (X,Y)-- [2:0-3-0,0-1-4], [5:0-8-8,Edge]

LOADING (psf)		SPACING- 2-0-0		CSI.		DEFL. in (loc) l/defl L/d				PLATES	GRIP
TCLL	20.0	Plate Grip DOL	1.15	TC	0.13	Vert(LL) -0.01	6-7	>999	360	MT20	244/190
TCDL	10.0	Lumber DOL	1.15	BC	0.10	Vert(CT) -0.02	6-7	>999	240		
BCLL	0.0 *	Rep Stress Incr	YES	WB	0.24	Horz(CT) -0.00	9	n/a	n/a		
BCDL	10.0	Code IRC2015/TPI2014		Matrix-S		Wind(LL) 0.01	2-7	>999	240	Weight: 110 lb	FT = 20%

LUMBER-

TOP CHORD	2x6 SP No.1
BOT CHORD	2x6 SP No.1
WEBS	2x4 SP No.2 *Except* 5-6: 2x6 SP No.1
OTHERS	2x4 SP No.2
SLIDER	Left 2x4 SP No.2 3-8-8

BRACING-

TOP CHORD	Structural wood sheathing directly applied or 6-0-0 oc purlins, except end verticals.
BOT CHORD	Rigid ceiling directly applied or 10-0-0 oc bracing.

REACTIONS. (size) 2=0-3-8, 7=0-3-8, 9=0-3-8
Max Horz 7=258(LC 12)
Max Uplift 2=-42(LC 9), 9=-167(LC 12)
Max Grav 2=327(LC 1), 7=335(LC 3), 9=337(LC 19)

FORCES. (lb) - Max. Comp./Max. Ten. - All forces 250 (lb) or less except when shown.

TOP CHORD	6-8=-178/332, 5-8=-178/332
BOT CHORD	6-7=-200/265
WEBS	4-6=-367/294, 5-9=-421/229

NOTES-

1) Wind: ASCE 7-10; Vult=130mph Vasd=103mph; TCDL=6.0psf; BCDL=6.0psf; h=15ft; Cat. II; Exp C; Enclosed; MWFRS (envelope) and C-C Exterior(2) -1-0-15 to 3-3-14, Interior(1) 3-3-14 to 10-6-4 zone; porch left exposed;C-C for members and forces & MWFRS for reactions shown; Lumber DOL=1.60 plate grip DOL=1.60
2) This truss has been designed for a 10.0 psf bottom chord live load nonconcurrent with any other live loads.
3) * This truss has been designed for a live load of 30.0psf on the bottom chord in all areas where a rectangle 3-6-0 tall by 2-0-0 wide will fit between the bottom chord and any other members.
4) Bearing at joint(s) 9 considers parallel to grain value using ANSI/TPI 1 angle to grain formula. Building designer should verify capacity of bearing surface.
5) Provide mechanical connection (by others) of truss to bearing plate capable of withstanding 100 lb uplift at joint(s) 2 except (jt=lb) 9=167.

July 26,2024

WARNING - Verify design parameters and READ NOTES ON THIS AND INCLUDED MITEK REFERENCE PAGE MII-7473 rev. 1/2/2023 BEFORE USE.
Design valid for use only with MiTek® connectors. This design is based only upon parameters shown, and is for an individual building component, not a truss system. Before use, the building designer must verify the applicability of design parameters and properly incorporate this design into the overall building design. Bracing indicated is to prevent buckling of individual truss web and/or chord members only. Additional temporary and permanent bracing is always required for stability and to prevent collapse with possible personal injury and property damage. For general guidance regarding the fabrication, storage, delivery, erection and bracing of trusses and truss systems, see **ANSI/TPI1 Quality Criteria and DSB-22** available from Truss Plate Institute (www.tpinst.org) and **BCSI Building Component Safety Information** available from the Structural Building Component Association (www.sbcacomponents.com)

ENGINEERING BY TRENCO A MiTek Affiliate
818 Soundside Road
Edenton, NC 27932

Job	Truss	Truss Type	Qty	Ply	Lot 71 Magnolia Hills
J0125-0179	VA1	VALLEY	1	1	I67090967 Job Reference (optional)

Comtech, Inc, Fayetteville, NC - 28314, 8.630 s Jul 12 2024 MiTek Industries, Inc. Wed Jul 24 14:09:37 2024 Page 1
ID:d9Okus??o?Oqeo9B6tqaBuzGAgg-RfC?PsB70Hq3NSgPqnL8w3uITXbGKWrCDoi7J4zJC?f

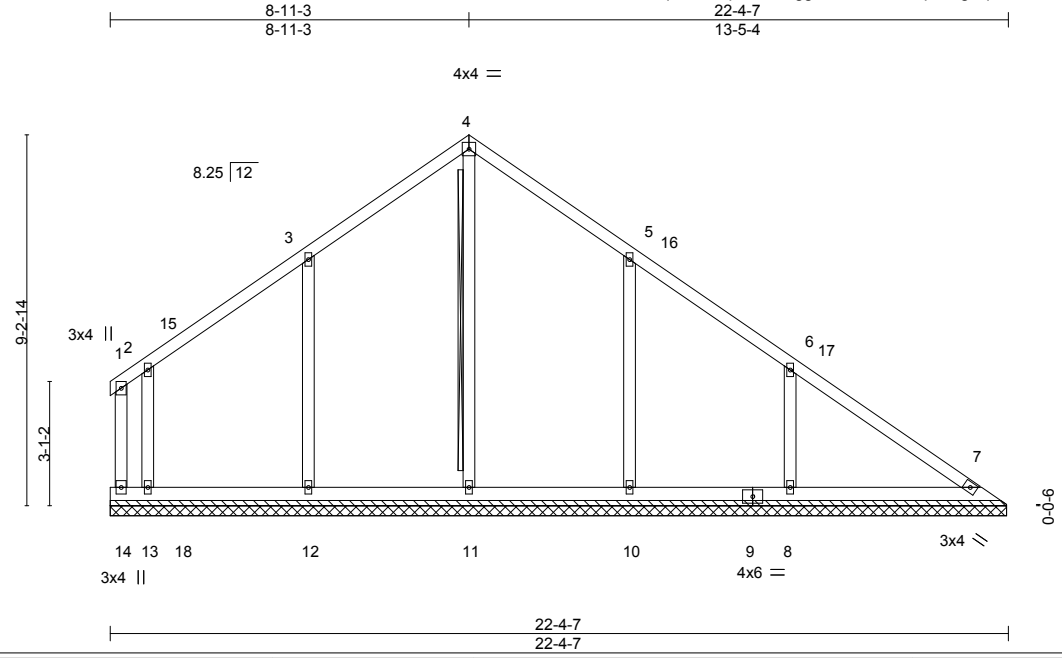

LOADING (psf)			SPACING- 2-0-0		CSI.		DEFL.	in	(loc)	l/defl	L/d	PLATES	GRIP
TCLL	20.0		Plate Grip DOL	1.15	TC	0.19	Vert(LL)	n/a	-	n/a	999	MT20	244/190
TCDL	10.0		Lumber DOL	1.15	BC	0.07	Vert(CT)	n/a	-	n/a	999		
BCLL	0.0	*	Rep Stress Incr	YES	WB	0.20	Horz(CT)	0.00	7	n/a	n/a		
BCDL	10.0		Code IRC2015/TPI2014		Matrix-S							Weight: 134 lb	FT = 20%

LUMBER-

TOP CHORD	2x4 SP No.1
BOT CHORD	2x6 SP No.1
WEBS	2x4 SP No.2
OTHERS	2x4 SP No.2

BRACING-

TOP CHORD	Structural wood sheathing directly applied or 6-0-0 oc purlins, except end verticals.
BOT CHORD	Rigid ceiling directly applied or 10-0-0 oc bracing.
WEBS	T-Brace: 2x4 SPF No.2 - 4-11 Fasten (2X) T and I braces to narrow edge of web with 10d (0.131"x3") nails, 6in o.c.,with 3in minimum end distance. Brace must cover 90% of web length.

REACTIONS. All bearings 22-3-14.
(lb) - Max Horz 14=-208(LC 8)
Max Uplift All uplift 100 lb or less at joint(s) 7, 10 except 14=-172(LC 19), 12=-109(LC 12), 13=-108(LC 12), 8=-123(LC 13)
Max Grav All reactions 250 lb or less at joint(s) 14, 7 except 11=500(LC 20), 12=555(LC 19), 13=439(LC 19), 10=525(LC 20), 8=481(LC 20)

FORCES. (lb) - Max. Comp./Max. Ten. - All forces 250 (lb) or less except when shown.
WEBS 3-12=-321/212, 2-13=-271/210, 5-10=-295/198, 6-8=-352/228

NOTES-
1) Unbalanced roof live loads have been considered for this design.
2) Wind: ASCE 7-10; Vult=130mph Vasd=103mph; TCDL=6.0psf; BCDL=6.0psf; h=15ft; Cat. II; Exp C; Enclosed; MWFRS (envelope) and C-C Exterior(2) 0-3-4 to 4-11-3, Interior(1) 4-11-3 to 8-11-3, Exterior(2) 8-11-3 to 13-4-0, Interior(1) 13-4-0 to 21-7-12 zone;C-C for members and forces & MWFRS for reactions shown; Lumber DOL=1.60 plate grip DOL=1.60
3) All plates are 2x4 MT20 unless otherwise indicated.
4) Gable requires continuous bottom chord bearing.
5) This truss has been designed for a 10.0 psf bottom chord live load nonconcurrent with any other live loads.
6) * This truss has been designed for a live load of 30.0psf on the bottom chord in all areas where a rectangle 3-6-0 tall by 2-0-0 wide will fit between the bottom chord and any other members, with BCDL = 10.0psf.
7) Provide mechanical connection (by others) of truss to bearing plate capable of withstanding 100 lb uplift at joint(s) 7, 10 except (jt=lb) 14=172, 12=109, 13=108, 8=123.
8) Warning: Additional permanent and stability bracing for truss system (not part of this component design) is always required.

July 26,2024

WARNING - Verify design parameters and READ NOTES ON THIS AND INCLUDED MITEK REFERENCE PAGE MII-7473 rev. 1/2/2023 BEFORE USE.
Design valid for use only with MiTek® connectors. This design is based only upon parameters shown, and is for an individual building component, not a truss system. Before use, the building designer must verify the applicability of design parameters and properly incorporate this design into the overall building design. Bracing indicated is to prevent buckling of individual truss web and/or chord members only. Additional temporary and permanent bracing is always required for stability and to prevent collapse with possible personal injury and property damage. For general guidance regarding the fabrication, storage, delivery, erection and bracing of trusses and truss systems, see **ANSI/TPI1 Quality Criteria and DSB-22** available from Truss Plate Institute (www.tpinst.org) and **BCSI Building Component Safety Information** available from the Structural Building Component Association (www.sbcacomponents.com)

ENGINEERING BY TRENCO A MiTek Affiliate
818 Soundside Road
Edenton, NC 27932

Job	Truss	Truss Type	Qty	Ply	Lot 71 Magnolia Hills
J0125-0179	VA2	VALLEY	1	1	I67090968 Job Reference (optional)

Comtech, Inc, Fayetteville, NC - 28314, 8.630 s Jul 12 2024 MiTek Industries, Inc. Wed Jul 24 14:09:38 2024 Page 1
ID:d9Okus??o?Oqeo9B6tqaBuzGAgg-RfC?PsB70Hq3NSgPqnL8w3uITXbGKWrCDoi7J4zJC?f

8-11-3 | 19-4-1
8-11-3 | 10-4-14

Scale = 1:44.6

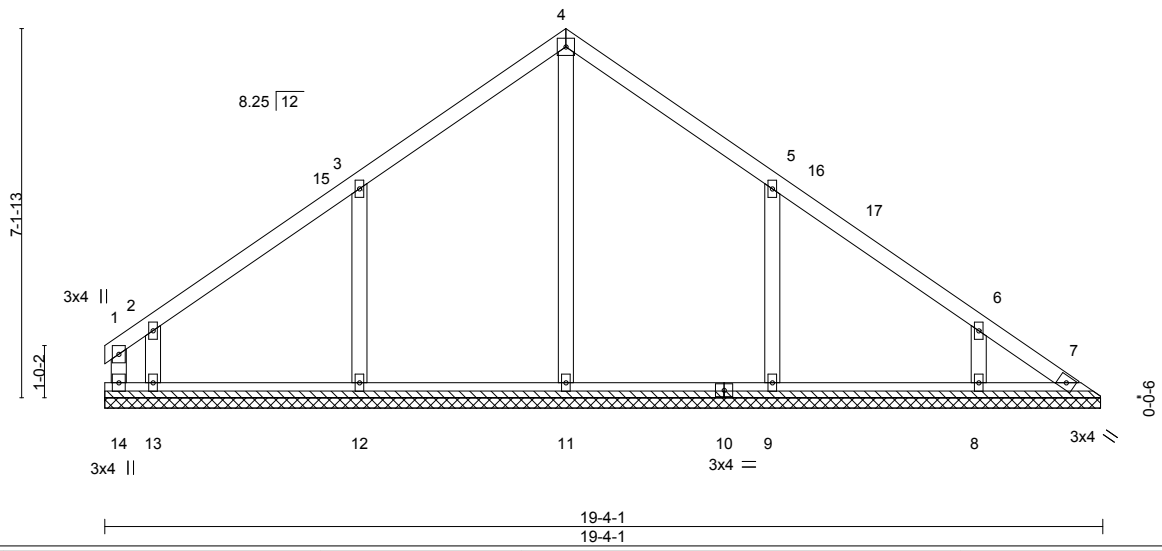

LOADING (psf)		SPACING- 2-0-0		CSI.		DEFL.	in	(loc)	l/defl	L/d	PLATES	GRIP
TCLL	20.0	Plate Grip DOL	1.15	TC	0.16	Vert(LL)	n/a	-	n/a	999	MT20	244/190
TCDL	10.0	Lumber DOL	1.15	BC	0.19	Vert(CT)	n/a	-	n/a	999		
BCLL	0.0 *	Rep Stress Incr	YES	WB	0.15	Horz(CT)	0.00	7	n/a	n/a		
BCDL	10.0	Code IRC2015/TPI2014		Matrix-S							Weight: 88 lb	FT = 20%

LUMBER-
TOP CHORD 2x4 SP No.1
BOT CHORD 2x4 SP No.1
WEBS 2x4 SP No.2
OTHERS 2x4 SP No.2

BRACING-
TOP CHORD Structural wood sheathing directly applied or 6-0-0 oc purlins, except end verticals.
BOT CHORD Rigid ceiling directly applied or 10-0-0 oc bracing.

REACTIONS. All bearings 19-3-9.
(lb) - Max Horz 14=-163(LC 8)
Max Uplift All uplift 100 lb or less at joint(s) 7, 8 except 14=-187(LC 10), 12=-108(LC 12), 13=-166(LC 12), 9=-109(LC 13)
Max Grav All reactions 250 lb or less at joint(s) 14, 7 except 11=462(LC 21), 12=462(LC 19), 13=335(LC 19), 9=463(LC 20), 8=272(LC 20)

FORCES. (lb) - Max. Comp./Max. Ten. - All forces 250 (lb) or less except when shown.
WEBS 3-12=-321/213, 2-13=-298/241, 5-9=-323/214

NOTES-
1) Unbalanced roof live loads have been considered for this design.
2) Wind: ASCE 7-10; Vult=130mph Vasd=103mph; TCDL=6.0psf; BCDL=6.0psf; h=15ft; Cat. II; Exp C; Enclosed; MWFRS (envelope) and C-C Exterior(2) 0-3-4 to 4-11-3, Interior(1) 4-11-3 to 8-11-3, Exterior(2) 8-11-3 to 13-4-0, Interior(1) 13-4-0 to 18-10-5 zone;C-C for members and forces & MWFRS for reactions shown; Lumber DOL=1.60 plate grip DOL=1.60
3) All plates are 2x4 MT20 unless otherwise indicated.
4) Gable requires continuous bottom chord bearing.
5) This truss has been designed for a 10.0 psf bottom chord live load nonconcurrent with any other live loads.
6) * This truss has been designed for a live load of 30.0psf on the bottom chord in all areas where a rectangle 3-6-0 tall by 2-0-0 wide will fit between the bottom chord and any other members, with BCDL = 10.0psf.
7) Provide mechanical connection (by others) of truss to bearing plate capable of withstanding 100 lb uplift at joint(s) 7, 8 except (jt=lb) 14=187, 12=108, 13=166, 9=109.

July 26,2024

WARNING - Verify design parameters and READ NOTES ON THIS AND INCLUDED MITEK REFERENCE PAGE MII-7473 rev. 1/2/2023 BEFORE USE.
Design valid for use only with MiTek® connectors. This design is based only upon parameters shown, and is for an individual building component, not a truss system. Before use, the building designer must verify the applicability of design parameters and properly incorporate this design into the overall building design. Bracing indicated is to prevent buckling of individual truss web and/or chord members only. Additional temporary and permanent bracing is always required for stability and to prevent collapse with possible personal injury and property damage. For general guidance regarding the fabrication, storage, delivery, erection and bracing of trusses and truss systems, see **ANSI/TPI1 Quality Criteria and DSB-22** available from Truss Plate Institute (www.tpinst.org) and **BCSI Building Component Safety Information** available from the Structural Building Component Association (www.sbcacomponents.com)

ENGINEERING BY TRENCO A MiTek Affiliate
818 Soundside Road
Edenton, NC 27932

Job	Truss	Truss Type	Qty	Ply	Lot 71 Magnolia Hills
J0125-0179	VA3	VALLEY	1	1	I67090969 Job Reference (optional)

Comtech, Inc, Fayetteville, NC - 28314, 8.630 s Jul 12 2024 MiTek Industries, Inc. Wed Jul 24 14:09:38 2024 Page 1
ID:d9Okus??o?Oqeo9B6tqaBuzGAgg-RfC?PsB70Hq3NSgPqnL8w3uITXbGKWrCDoi7J4zJC?f

Scale: 3/8"=1'

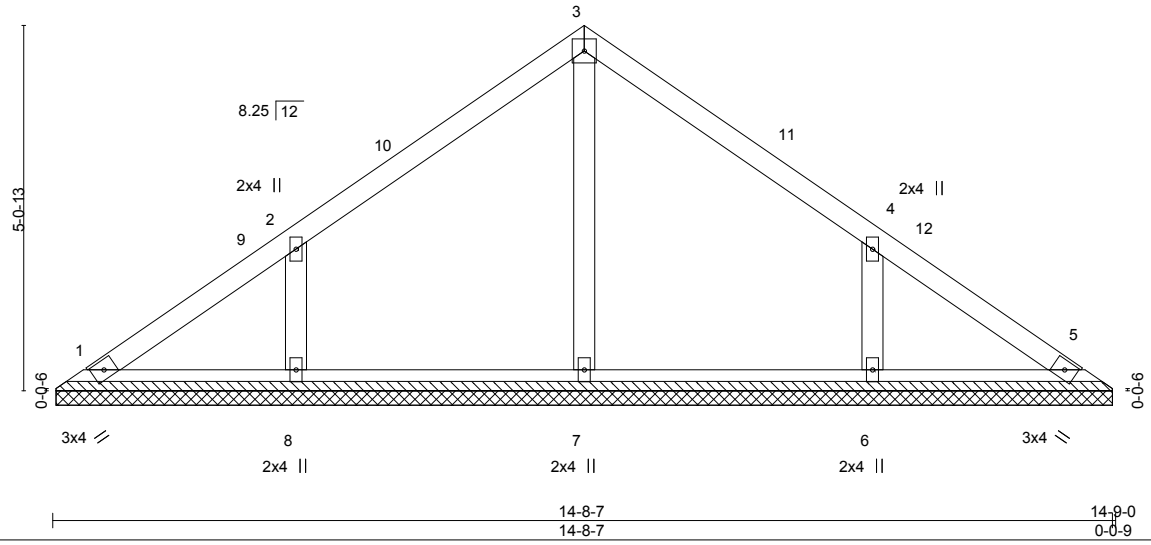

Plate Offsets (X,Y)-- [4:0-0-0,0-0-0]

LOADING (psf)		SPACING- 2-0-0		CSI.		DEFL.	in	(loc)	l/defl	L/d	PLATES	GRIP
TCLL	20.0	Plate Grip DOL	1.15	TC	0.14	Vert(LL)	n/a	-	n/a	999	MT20	244/190
TCDL	10.0	Lumber DOL	1.15	BC	0.08	Vert(CT)	n/a	-	n/a	999		
BCLL	0.0 *	Rep Stress Incr	YES	WB	0.07	Horz(CT)	0.00	5	n/a	n/a		
BCDL	10.0	Code IRC2015/TPI2014		Matrix-S							Weight: 59 lb	FT = 20%

LUMBER-
TOP CHORD 2x4 SP No.1
BOT CHORD 2x4 SP No.1
OTHERS 2x4 SP No.2

BRACING-
TOP CHORD Structural wood sheathing directly applied or 6-0-0 oc purlins.
BOT CHORD Rigid ceiling directly applied or 10-0-0 oc bracing.

REACTIONS. All bearings 14-7-15.
(lb) - Max Horz 1=-114(LC 8)
Max Uplift All uplift 100 lb or less at joint(s) 1 except 8=-104(LC 12), 6=-104(LC 13)
Max Grav All reactions 250 lb or less at joint(s) 1, 5 except 7=254(LC 1), 8=350(LC 19), 6=350(LC 20)

FORCES. (lb) - Max. Comp./Max. Ten. - All forces 250 (lb) or less except when shown.
WEBS 2-8=-301/207, 4-6=-301/207

NOTES-
1) Unbalanced roof live loads have been considered for this design.
2) Wind: ASCE 7-10; Vult=130mph Vasd=103mph; TCDL=6.0psf; BCDL=6.0psf; h=15ft; Cat. II; Exp C; Enclosed; MWFRS (envelope) and C-C Exterior(2) 0-5-12 to 4-10-9, Interior(1) 4-10-9 to 7-4-8, Exterior(2) 7-4-8 to 11-9-5, Interior(1) 11-9-5 to 14-3-4 zone;C-C for members and forces & MWFRS for reactions shown; Lumber DOL=1.60 plate grip DOL=1.60
3) Gable requires continuous bottom chord bearing.
4) This truss has been designed for a 10.0 psf bottom chord live load nonconcurrent with any other live loads.
5) * This truss has been designed for a live load of 30.0psf on the bottom chord in all areas where a rectangle 3-6-0 tall by 2-0-0 wide will fit between the bottom chord and any other members.
6) Provide mechanical connection (by others) of truss to bearing plate capable of withstanding 100 lb uplift at joint(s) 1 except (jt=lb) 8=104, 6=104.

July 26,2024

WARNING - Verify design parameters and READ NOTES ON THIS AND INCLUDED MITEK REFERENCE PAGE MII-7473 rev. 1/2/2023 BEFORE USE.
Design valid for use only with MiTek® connectors. This design is based only upon parameters shown, and is for an individual building component, not a truss system. Before use, the building designer must verify the applicability of design parameters and properly incorporate this design into the overall building design. Bracing indicated is to prevent buckling of individual truss web and/or chord members only. Additional temporary and permanent bracing is always required for stability and to prevent collapse with possible personal injury and property damage. For general guidance regarding the fabrication, storage, delivery, erection and bracing of trusses and truss systems, see **ANSI/TPI1 Quality Criteria and DSB-22** available from Truss Plate Institute (www.tpinst.org) and **BCSI Building Component Safety Information** available from the Structural Building Component Association (www.sbcacomponents.com)

ENGINEERING BY TRENCO A MiTek Affiliate
818 Soundside Road
Edenton, NC 27932

Job	Truss	Truss Type	Qty	Ply	Lot 71 Magnolia Hills
J0125-0179	VA4	VALLEY	1	1	I67090970 Job Reference (optional)

Comtech, Inc, Fayetteville, NC - 28314, 8.630 s Jul 12 2024 MiTek Industries, Inc. Wed Jul 24 14:09:39 2024 Page 1
ID:d9Okus??o?Oqeo9B6tqaBuzGAgg-RfC?PsB70Hq3NSgPqnL8w3uITXbGKWrCDoi7J4zJC?f

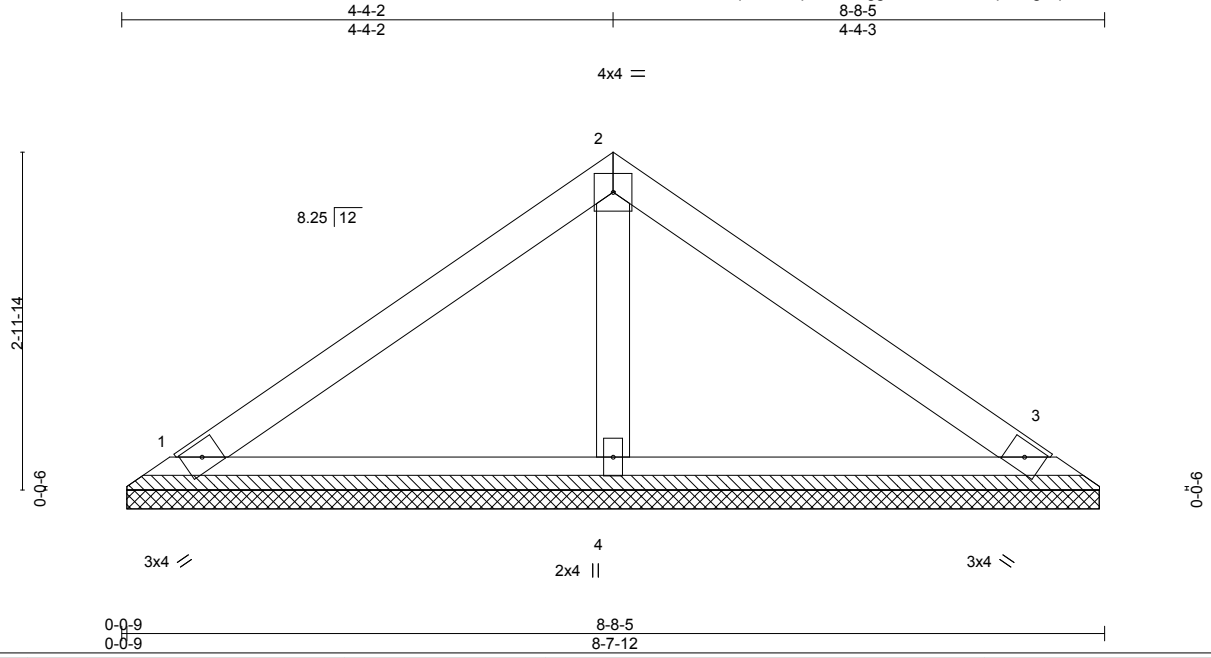

LOADING (psf)			SPACING- 2-0-0		CSI.		DEFL.	in	(loc)	l/defl	L/d	PLATES	GRIP
TCLL	20.0		Plate Grip DOL	1.15	TC	0.21	Vert(LL)	n/a	-	n/a	999	MT20	244/190
TCDL	10.0		Lumber DOL	1.15	BC	0.11	Vert(CT)	n/a	-	n/a	999		
BCLL	0.0	*	Rep Stress Incr	YES	WB	0.03	Horz(CT)	0.00	3	n/a	n/a		
BCDL	10.0		Code IRC2015/TPI2014		Matrix-P							Weight: 30 lb	FT = 20%

LUMBER-
TOP CHORD 2x4 SP No.1
BOT CHORD 2x4 SP No.1
OTHERS 2x4 SP No.2

BRACING-
TOP CHORD Structural wood sheathing directly applied or 6-0-0 oc purlins.
BOT CHORD Rigid ceiling directly applied or 10-0-0 oc bracing.

REACTIONS. (size) 1=8-7-3, 3=8-7-3, 4=8-7-3
Max Horz 1=-64(LC 8)
Max Uplift 1=-27(LC 12), 3=-33(LC 13)
Max Grav 1=169(LC 1), 3=170(LC 1), 4=280(LC 1)

FORCES. (lb) - Max. Comp./Max. Ten. - All forces 250 (lb) or less except when shown.

NOTES-
1) Unbalanced roof live loads have been considered for this design.
2) Wind: ASCE 7-10; Vult=130mph Vasd=103mph; TCDL=6.0psf; BCDL=6.0psf; h=15ft; Cat. II; Exp C; Enclosed; MWFRS (envelope) and C-C Exterior(2) zone;C-C for members and forces & MWFRS for reactions shown; Lumber DOL=1.60 plate grip DOL=1.60
3) This truss has been designed for a 10.0 psf bottom chord live load nonconcurrent with any other live loads.
4) * This truss has been designed for a live load of 30.0psf on the bottom chord in all areas where a rectangle 3-6-0 tall by 2-0-0 wide will fit between the bottom chord and any other members.
5) Provide mechanical connection (by others) of truss to bearing plate capable of withstanding 100 lb uplift at joint(s) 1, 3.
6) Non Standard bearing condition. Review required.

July 26,2024

WARNING - Verify design parameters and READ NOTES ON THIS AND INCLUDED MITEK REFERENCE PAGE MII-7473 rev. 1/2/2023 BEFORE USE.
Design valid for use only with MiTek® connectors. This design is based only upon parameters shown, and is for an individual building component, not a truss system. Before use, the building designer must verify the applicability of design parameters and properly incorporate this design into the overall building design. Bracing indicated is to prevent buckling of individual truss web and/or chord members only. Additional temporary and permanent bracing is always required for stability and to prevent collapse with possible personal injury and property damage. For general guidance regarding the fabrication, storage, delivery, erection and bracing of trusses and truss systems, see **ANSI/TPI1 Quality Criteria and DSB-22** available from Truss Plate Institute (www.tpinst.org) and **BCSI Building Component Safety Information** available from the Structural Building Component Association (www.sbcacomponents.com)

ENGINEERING BY TRENCO A MiTek Affiliate
818 Soundside Road
Edenton, NC 27932

Job	Truss	Truss Type	Qty	Ply	Lot 71 Magnolia Hills
J0125-0179	VB1	VALLEY	1	1	I67090971 Job Reference (optional)

Comtech, Inc, Fayetteville, NC - 28314, 8.630 s Jul 12 2024 MiTek Industries, Inc. Wed Jul 24 14:09:39 2024 Page 1
ID:d9Okus??o?Oqeo9B6tqaBuzGAgg-RfC?PsB70Hq3NSgPqnL8w3uITXbGKWrCDoi7J4zJC?f

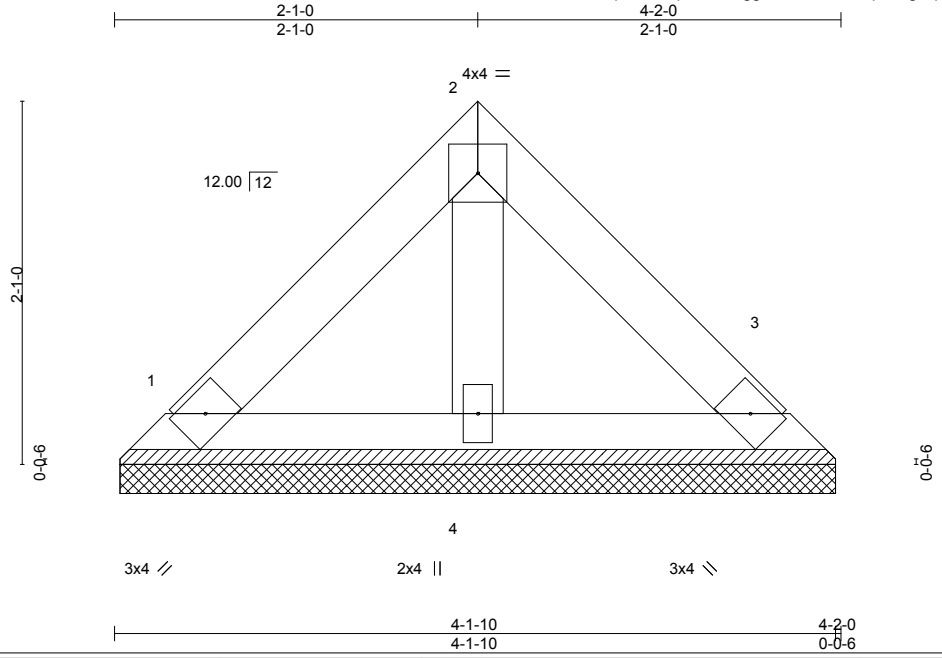

LOADING (psf)			SPACING- 2-0-0		CSI.		DEFL.	in	(loc)	l/defl	L/d	PLATES	GRIP
TCLL	20.0		Plate Grip DOL	1.15	TC	0.05	Vert(LL)	n/a	-	n/a	999	MT20	244/190
TCDL	10.0		Lumber DOL	1.15	BC	0.02	Vert(CT)	n/a	-	n/a	999		
BCLL	0.0	*	Rep Stress Incr	YES	WB	0.01	Horz(CT)	0.00	3	n/a	n/a		
BCDL	10.0		Code IRC2015/TPI2014		Matrix-P							Weight: 16 lb	FT = 20%

LUMBER-
TOP CHORD 2x4 SP No.1
BOT CHORD 2x4 SP No.1
OTHERS 2x4 SP No.2

BRACING-
TOP CHORD Structural wood sheathing directly applied or 4-2-0 oc purlins.
BOT CHORD Rigid ceiling directly applied or 10-0-0 oc bracing.

REACTIONS. (size) 1=4-1-4, 3=4-1-4, 4=4-1-4
Max Horz 1=-42(LC 8)
Max Uplift 1=-15(LC 13), 3=-15(LC 13)
Max Grav 1=84(LC 1), 3=84(LC 1), 4=108(LC 1)

FORCES. (lb) - Max. Comp./Max. Ten. - All forces 250 (lb) or less except when shown.

NOTES-
1) Unbalanced roof live loads have been considered for this design.
2) Wind: ASCE 7-10; Vult=130mph Vasd=103mph; TCDL=6.0psf; BCDL=6.0psf; h=15ft; Cat. II; Exp C; Enclosed; MWFRS (envelope) and C-C Exterior(2) zone;C-C for members and forces & MWFRS for reactions shown; Lumber DOL=1.60 plate grip DOL=1.60
3) Gable requires continuous bottom chord bearing.
4) This truss has been designed for a 10.0 psf bottom chord live load nonconcurrent with any other live loads.
5) * This truss has been designed for a live load of 30.0psf on the bottom chord in all areas where a rectangle 3-6-0 tall by 2-0-0 wide will fit between the bottom chord and any other members.
6) Provide mechanical connection (by others) of truss to bearing plate capable of withstanding 100 lb uplift at joint(s) 1, 3.

July 26,2024

WARNING - Verify design parameters and READ NOTES ON THIS AND INCLUDED MITEK REFERENCE PAGE MII-7473 rev. 1/2/2023 BEFORE USE.
Design valid for use only with MiTek® connectors. This design is based only upon parameters shown, and is for an individual building component, not a truss system. Before use, the building designer must verify the applicability of design parameters and properly incorporate this design into the overall building design. Bracing indicated is to prevent buckling of individual truss web and/or chord members only. Additional temporary and permanent bracing is always required for stability and to prevent collapse with possible personal injury and property damage. For general guidance regarding the fabrication, storage, delivery, erection and bracing of trusses and truss systems, see **ANSI/TPI1 Quality Criteria and DSB-22** available from Truss Plate Institute (www.tpinst.org) and **BCSI Building Component Safety Information** available from the Structural Building Component Association (www.sbcacomponents.com)

ENGINEERING BY TRENCO A MiTek Affiliate
818 Soundside Road
Edenton, NC 27932

Job	Truss	Truss Type	Qty	Ply	Lot 71 Magnolia Hills
J0125-0179	VC1	VALLEY	1	1	I67090972 Job Reference (optional)

Comtech, Inc, Fayetteville, NC - 28314, 8.630 s Jul 12 2024 MiTek Industries, Inc. Wed Jul 24 14:09:39 2024 Page 1
ID:d9Okus??o?Oqeo9B6tqaBuzGAgg-RfC?PsB70Hq3NSgPqnL8w3uITXbGKWrCDoi7J4zJC?f

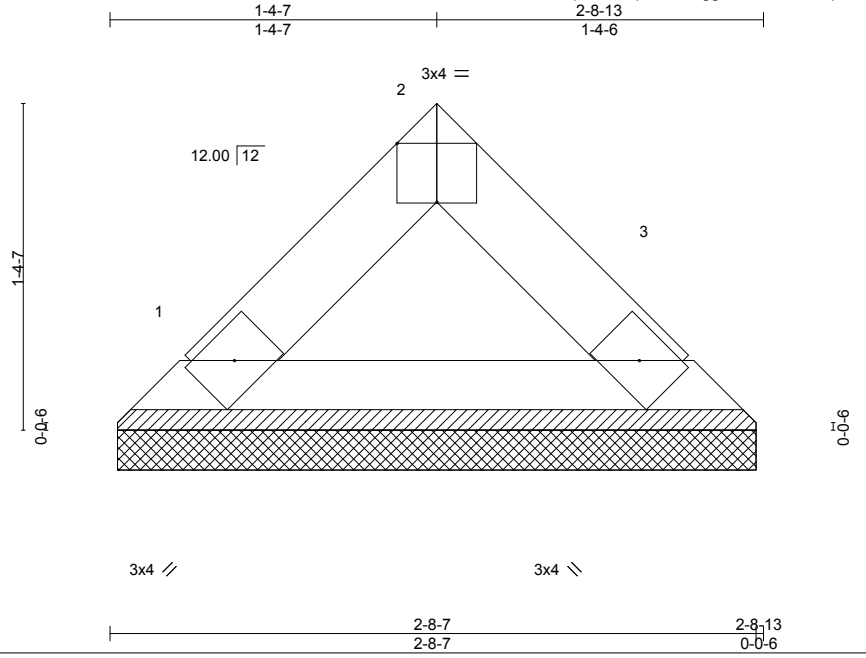

Plate Offsets (X,Y)-- [2:0-2-0,Edge]

LOADING (psf)		SPACING- 2-0-0		CSI.		DEFL.	in	(loc)	l/defl	L/d	PLATES	GRIP
TCLL	20.0	Plate Grip DOL	1.15	TC	0.02	Vert(LL)	n/a	-	n/a	999	MT20	244/190
TCDL	10.0	Lumber DOL	1.15	BC	0.03	Vert(CT)	n/a	-	n/a	999		
BCLL	0.0 *	Rep Stress Incr	YES	WB	0.00	Horz(CT)	0.00	3	n/a	n/a		
BCDL	10.0	Code IRC2015/TPI2014		Matrix-P							Weight: 8 lb	FT = 20%

LUMBER-
TOP CHORD 2x4 SP No.1
BOT CHORD 2x4 SP No.1

BRACING-
TOP CHORD Structural wood sheathing directly applied or 2-8-13 oc purlins.
BOT CHORD Rigid ceiling directly applied or 10-0-0 oc bracing.

REACTIONS. (size) 1=2-8-1, 3=2-8-1
Max Horz 1=24(LC 9)
Max Uplift 1=-3(LC 12), 3=-3(LC 12)
Max Grav 1=81(LC 1), 3=81(LC 1)

FORCES. (lb) - Max. Comp./Max. Ten. - All forces 250 (lb) or less except when shown.

NOTES-
1) Unbalanced roof live loads have been considered for this design.
2) Wind: ASCE 7-10; Vult=130mph Vasd=103mph; TCDL=6.0psf; BCDL=6.0psf; h=15ft; Cat. II; Exp C; Enclosed; MWFRS (envelope) and C-C Exterior(2) zone;C-C for members and forces & MWFRS for reactions shown; Lumber DOL=1.60 plate grip DOL=1.60
3) Gable requires continuous bottom chord bearing.
4) This truss has been designed for a 10.0 psf bottom chord live load nonconcurrent with any other live loads.
5) * This truss has been designed for a live load of 30.0psf on the bottom chord in all areas where a rectangle 3-6-0 tall by 2-0-0 wide will fit between the bottom chord and any other members.
6) Provide mechanical connection (by others) of truss to bearing plate capable of withstanding 100 lb uplift at joint(s) 1, 3.

July 26,2024

WARNING - Verify design parameters and READ NOTES ON THIS AND INCLUDED MITEK REFERENCE PAGE MII-7473 rev. 1/2/2023 BEFORE USE.
Design valid for use only with MiTek® connectors. This design is based only upon parameters shown, and is for an individual building component, not a truss system. Before use, the building designer must verify the applicability of design parameters and properly incorporate this design into the overall building design. Bracing indicated is to prevent buckling of individual truss web and/or chord members only. Additional temporary and permanent bracing is always required for stability and to prevent collapse with possible personal injury and property damage. For general guidance regarding the fabrication, storage, delivery, erection and bracing of trusses and truss systems, see **ANSI/TPI1 Quality Criteria and DSB-22** available from Truss Plate Institute (www.tpinst.org) and **BCSI Building Component Safety Information** available from the Structural Building Component Association (www.sbcacomponents.com)

ENGINEERING BY TRENCO A MiTek Affiliate
818 Soundside Road
Edenton, NC 27932

Job	Truss	Truss Type	Qty	Ply	Lot 71 Magnolia Hills
J0125-0179	XH1	JACK-OPEN	5	1	I67090973 Job Reference (optional)

Comtech, Inc, Fayetteville, NC - 28314, 8.630 s Jul 12 2024 MiTek Industries, Inc. Wed Jul 24 14:09:40 2024 Page 1
ID:d9Okus??o?Oqeo9B6tqaBuzGAgg-RfC?PsB70Hq3NSgPqnL8w3uITXbGKWrCDoi7J4zJC?f

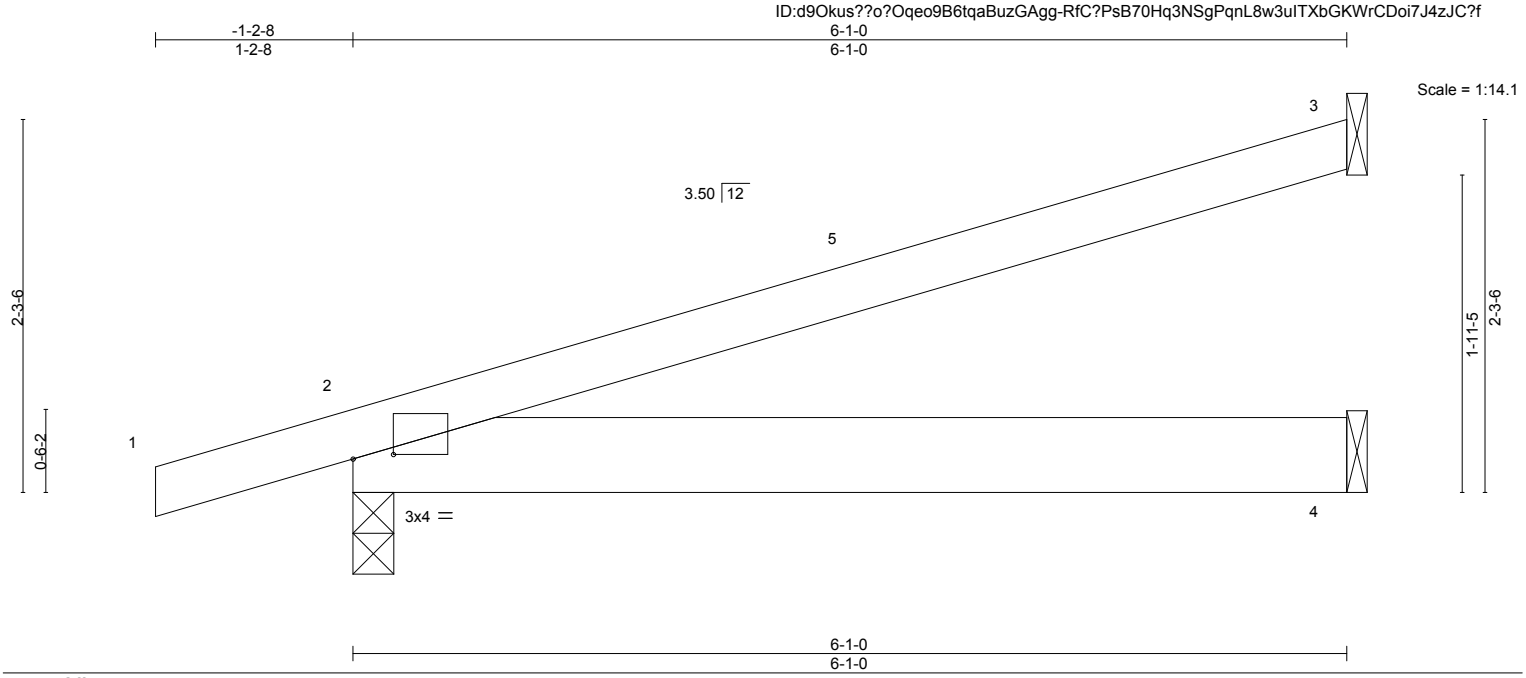

Plate Offsets (X,Y)-- [2:0-2-15,0-0-5]

LOADING (psf)		SPACING- 2-0-0		CSI.		DEFL. in (loc) l/defl L/d					PLATES	GRIP
TCLL	20.0	Plate Grip DOL	1.15	TC	0.46	Vert(LL)	-0.02	2-4	>999	360	MT20	244/190
TCDL	10.0	Lumber DOL	1.15	BC	0.14	Vert(CT)	-0.03	2-4	>999	240		
BCLL	0.0 *	Rep Stress Incr	YES	WB	0.00	Horz(CT)	-0.00	3	n/a	n/a		
BCDL	10.0	Code IRC2015/TPI2014		Matrix-P		Wind(LL)	0.04	2-4	>999	240	Weight: 26 lb	FT = 20%

LUMBER-
TOP CHORD 2x4 SP No.1
BOT CHORD 2x6 SP No.1

BRACING-
TOP CHORD Structural wood sheathing directly applied or 6-0-0 oc purlins.
BOT CHORD Rigid ceiling directly applied or 10-0-0 oc bracing.

REACTIONS. (size) 3=Mechanical, 2=0-3-0, 4=Mechanical
Max Horz 2=72(LC 8)
Max Uplift 3=-68(LC 12), 2=-135(LC 8), 4=-30(LC 8)
Max Grav 3=168(LC 1), 2=325(LC 1), 4=118(LC 3)

FORCES. (lb) - Max. Comp./Max. Ten. - All forces 250 (lb) or less except when shown.

NOTES-
1) Wind: ASCE 7-10; Vult=130mph Vasd=103mph; TCDL=6.0psf; BCDL=6.0psf; h=15ft; Cat. II; Exp C; Enclosed; MWFRS (envelope) and C-C Exterior(2) -1-2-8 to 3-2-5, Interior(1) 3-2-5 to 6-0-4 zone; porch left and right exposed;C-C for members and forces & MWFRS for reactions shown; Lumber DOL=1.60 plate grip DOL=1.60
2) This truss has been designed for a 10.0 psf bottom chord live load nonconcurrent with any other live loads.
3) * This truss has been designed for a live load of 30.0psf on the bottom chord in all areas where a rectangle 3-6-0 tall by 2-0-0 wide will fit between the bottom chord and any other members.
4) Refer to girder(s) for truss to truss connections.
5) Provide mechanical connection (by others) of truss to bearing plate capable of withstanding 100 lb uplift at joint(s) 3, 4 except (jt=lb) 2=135.

July 26,2024

WARNING - Verify design parameters and READ NOTES ON THIS AND INCLUDED MITEK REFERENCE PAGE MII-7473 rev. 1/2/2023 BEFORE USE.
Design valid for use only with MiTek® connectors. This design is based only upon parameters shown, and is for an individual building component, not a truss system. Before use, the building designer must verify the applicability of design parameters and properly incorporate this design into the overall building design. Bracing indicated is to prevent buckling of individual truss web and/or chord members only. Additional temporary and permanent bracing is always required for stability and to prevent collapse with possible personal injury and property damage. For general guidance regarding the fabrication, storage, delivery, erection and bracing of trusses and truss systems, see **ANSI/TPI1 Quality Criteria and DSB-22** available from Truss Plate Institute (www.tpinst.org) and **BCSI Building Component Safety Information** available from the Structural Building Component Association (www.sbcacomponents.com)

ENGINEERING BY TRENCO A MiTek Affiliate
818 Soundside Road
Edenton, NC 27932

Job	Truss	Truss Type	Qty	Ply	Lot 71 Magnolia Hills
J0125-0179	YH1	JACK-OPEN	2	1	I67090974 Job Reference (optional)

Comtech, Inc, Fayetteville, NC - 28314, 8.630 s Jul 12 2024 MiTek Industries, Inc. Wed Jul 24 14:09:40 2024 Page 1
ID:d9Okus??o?Oqeo9B6tqaBuzGAgg-RfC?PsB70Hq3NSgPqnL8w3uITXbGKWrCDoi7J4zJC?f

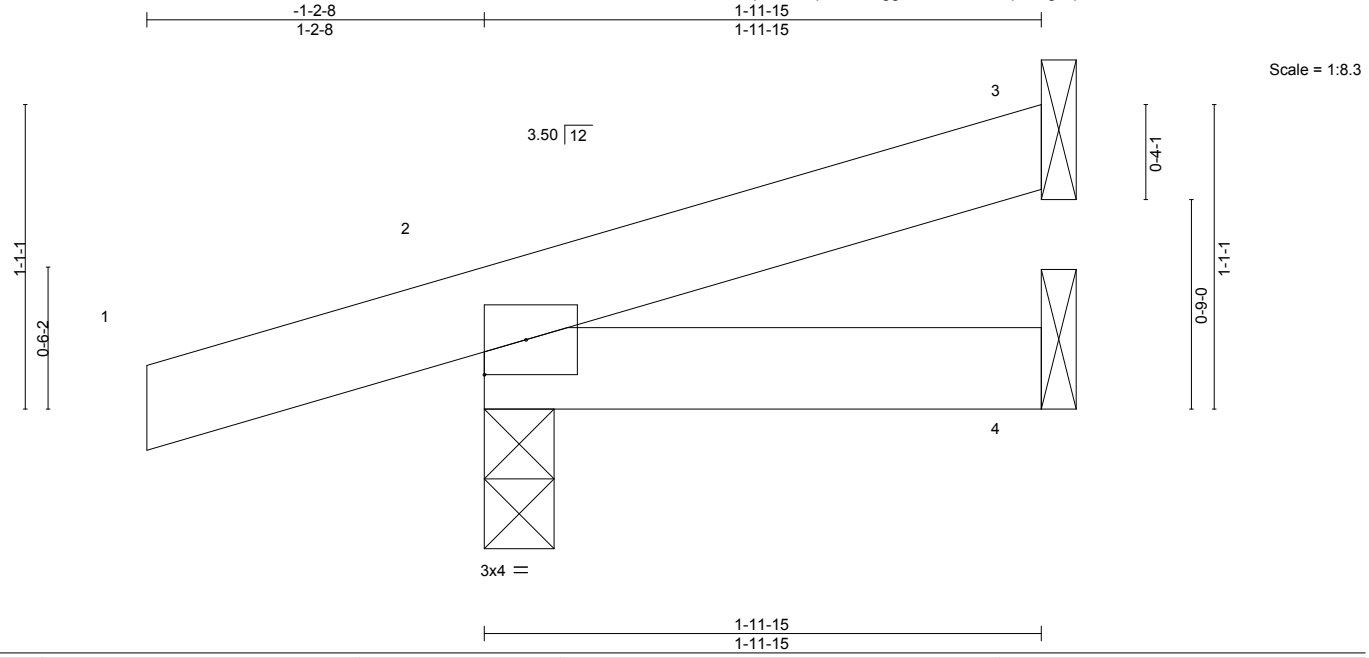

LOADING (psf)		SPACING- 2-0-0		CSI.		DEFL. in (loc) l/defl L/d					PLATES	GRIP
TCLL	20.0	Plate Grip DOL	1.15	TC	0.07	Vert(LL)	-0.00	2	>999	360	MT20	244/190
TCDL	10.0	Lumber DOL	1.15	BC	0.03	Vert(CT)	-0.00	2-4	>999	240		
BCLL	0.0 *	Rep Stress Incr	YES	WB	0.00	Horz(CT)	-0.00	3	n/a	n/a		
BCDL	10.0	Code IRC2015/TPI2014		Matrix-P		Wind(LL)	0.00	2-4	>999	240	Weight: 8 lb	FT = 20%

LUMBER-
TOP CHORD 2x4 SP No.1
BOT CHORD 2x4 SP No.1

BRACING-
TOP CHORD Structural wood sheathing directly applied or 1-11-15 oc purlins.
BOT CHORD Rigid ceiling directly applied or 10-0-0 oc bracing.

REACTIONS. (size) 3=Mechanical, 2=0-3-0, 4=Mechanical
Max Horz 2=33(LC 8)
Max Uplift 3=-20(LC 12), 2=-84(LC 8), 4=-10(LC 8)
Max Grav 3=35(LC 1), 2=176(LC 1), 4=39(LC 3)

FORCES. (lb) - Max. Comp./Max. Ten. - All forces 250 (lb) or less except when shown.

NOTES-
1) Wind: ASCE 7-10; Vult=130mph Vasd=103mph; TCDL=6.0psf; BCDL=6.0psf; h=15ft; Cat. II; Exp C; Enclosed; MWFRS (envelope) and C-C Exterior(2) zone; porch left and right exposed;C-C for members and forces & MWFRS for reactions shown; Lumber DOL=1.60 plate grip DOL=1.60
2) This truss has been designed for a 10.0 psf bottom chord live load nonconcurrent with any other live loads.
3) * This truss has been designed for a live load of 30.0psf on the bottom chord in all areas where a rectangle 3-6-0 tall by 2-0-0 wide will fit between the bottom chord and any other members.
4) Refer to girder(s) for truss to truss connections.
5) Provide mechanical connection (by others) of truss to bearing plate capable of withstanding 100 lb uplift at joint(s) 3, 2, 4.

NORTH CAROLINA PROFESSIONAL SEAL 036322 ENGINEER ERIC A. GILBERT

July 26,2024

WARNING - Verify design parameters and READ NOTES ON THIS AND INCLUDED MITEK REFERENCE PAGE MII-7473 rev. 1/2/2023 BEFORE USE.
Design valid for use only with MiTek® connectors. This design is based only upon parameters shown, and is for an individual building component, not a truss system. Before use, the building designer must verify the applicability of design parameters and properly incorporate this design into the overall building design. Bracing indicated is to prevent buckling of individual truss web and/or chord members only. Additional temporary and permanent bracing is always required for stability and to prevent collapse with possible personal injury and property damage. For general guidance regarding the fabrication, storage, delivery, erection and bracing of trusses and truss systems, see **ANSI/TPI1 Quality Criteria and DSB-22** available from Truss Plate Institute (www.tpinst.org) and **BCSI Building Component Safety Information** available from the Structural Building Component Association (www.sbcacomponents.com)

ENGINEERING BY TRENCO A MiTek Affiliate
818 Soundside Road
Edenton, NC 27932

Job	Truss	Truss Type	Qty	Ply	Lot 71 Magnolia Hills
J0125-0179	YH2	JACK-OPEN	2	1	I67090975 Job Reference (optional)

Comtech, Inc, Fayetteville, NC - 28314, 8.630 s Jul 12 2024 MiTek Industries, Inc. Wed Jul 24 14:09:40 2024 Page 1
ID:d9Okus??o?Oqeo9B6tqaBuzGAgg-RfC?PsB70Hq3NSgPqnL8w3uITXbGKWrCDoi7J4zJC?f

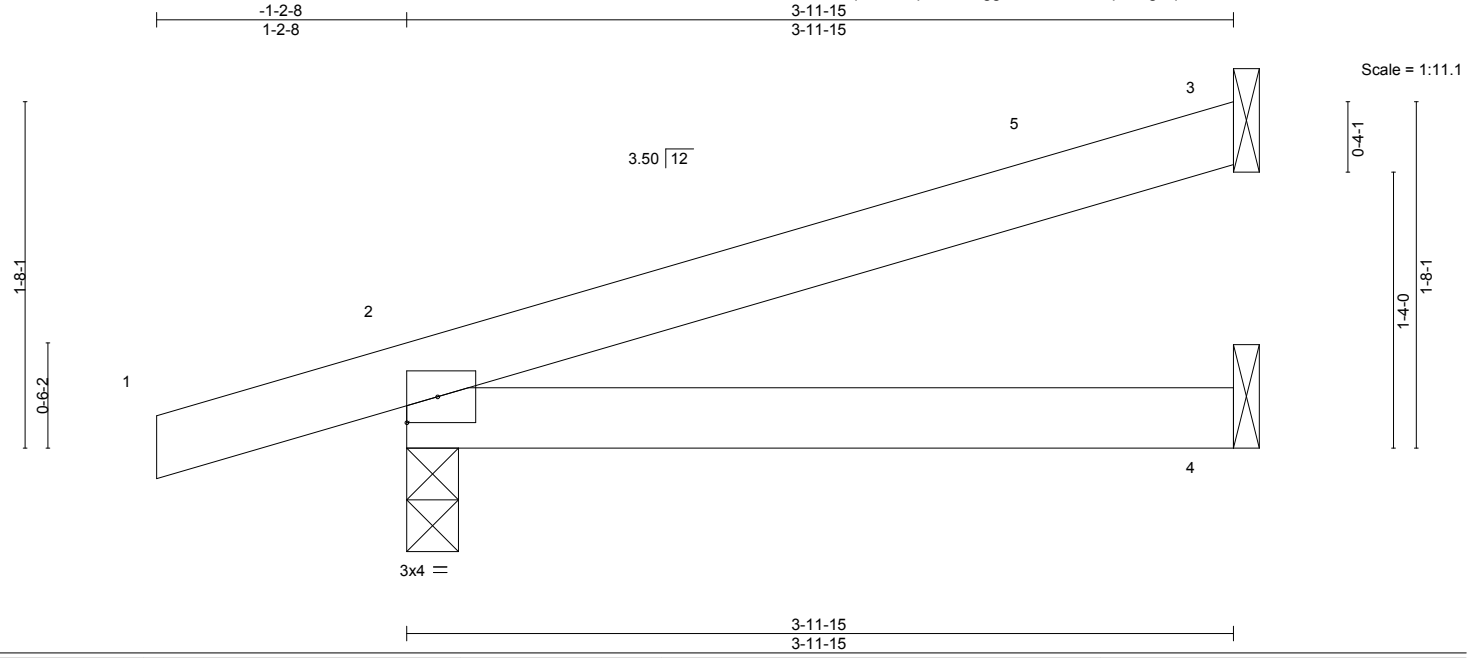

LOADING (psf)		SPACING- 2-0-0		CSI.		DEFL. in (loc) l/defl L/d					PLATES	GRIP
TCLL	20.0	Plate Grip DOL	1.15	TC	0.15	Vert(LL)	-0.01	2-4	>999	360	MT20	244/190
TCDL	10.0	Lumber DOL	1.15	BC	0.13	Vert(CT)	-0.02	2-4	>999	240		
BCLL	0.0 *	Rep Stress Incr	YES	WB	0.00	Horz(CT)	-0.00	3	n/a	n/a		
BCDL	10.0	Code IRC2015/TPI2014		Matrix-P		Wind(LL)	0.02	2-4	>999	240	Weight: 14 lb	FT = 20%

LUMBER-
TOP CHORD 2x4 SP No.1
BOT CHORD 2x4 SP No.1

BRACING-
TOP CHORD Structural wood sheathing directly applied or 3-11-15 oc purlins.
BOT CHORD Rigid ceiling directly applied or 10-0-0 oc bracing.

REACTIONS. (size) 3=Mechanical, 2=0-3-0, 4=Mechanical
Max Horz 2=51(LC 8)
Max Uplift 3=-44(LC 12), 2=-108(LC 8), 4=-20(LC 8)
Max Grav 3=100(LC 1), 2=246(LC 1), 4=76(LC 3)

FORCES. (lb) - Max. Comp./Max. Ten. - All forces 250 (lb) or less except when shown.

NOTES-
1) Wind: ASCE 7-10; Vult=130mph Vasd=103mph; TCDL=6.0psf; BCDL=6.0psf; h=15ft; Cat. II; Exp C; Enclosed; MWFRS (envelope) and C-C Exterior(2) -1-2-8 to 3-2-5, Interior(1) 3-2-5 to 3-11-3 zone; porch left and right exposed;C-C for members and forces & MWFRS for reactions shown; Lumber DOL=1.60 plate grip DOL=1.60
2) This truss has been designed for a 10.0 psf bottom chord live load nonconcurrent with any other live loads.
3) * This truss has been designed for a live load of 30.0psf on the bottom chord in all areas where a rectangle 3-6-0 tall by 2-0-0 wide will fit between the bottom chord and any other members.
4) Refer to girder(s) for truss to truss connections.
5) Provide mechanical connection (by others) of truss to bearing plate capable of withstanding 100 lb uplift at joint(s) 3, 4 except (jt=lb) 2=108.

July 26,2024

WARNING - Verify design parameters and READ NOTES ON THIS AND INCLUDED MITEK REFERENCE PAGE MII-7473 rev. 1/2/2023 BEFORE USE.
Design valid for use only with MiTek® connectors. This design is based only upon parameters shown, and is for an individual building component, not a truss system. Before use, the building designer must verify the applicability of design parameters and properly incorporate this design into the overall building design. Bracing indicated is to prevent buckling of individual truss web and/or chord members only. Additional temporary and permanent bracing is always required for stability and to prevent collapse with possible personal injury and property damage. For general guidance regarding the fabrication, storage, delivery, erection and bracing of trusses and truss systems, see **ANSI/TPI1 Quality Criteria and DSB-22** available from Truss Plate Institute (www.tpinst.org) and **BCSI Building Component Safety Information** available from the Structural Building Component Association (www.sbcacomponents.com)

ENGINEERING BY TRENCO A MiTek Affiliate
818 Soundside Road
Edenton, NC 27932

Job	Truss	Truss Type	Qty	Ply	Lot 71 Magnolia Hills
J0125-0179	ZH1	DIAGONAL HIP GIRDER	1	1	I67090976 Job Reference (optional)

Comtech, Inc, Fayetteville, NC - 28314, 8.630 s Jul 12 2024 MiTek Industries, Inc. Wed Jul 24 14:09:41 2024 Page 1
ID:d9Okus??o?Oqeo9B6tqaBuzGAgg-RfC?PsB70Hq3NSgPqnL8w3uITXbGKWrCDoi7J4zJC?f

-1-8-8 | 5-1-4 | 8-5-12
1-8-8 | 5-1-4 | 3-4-8

Scale = 1:18.8

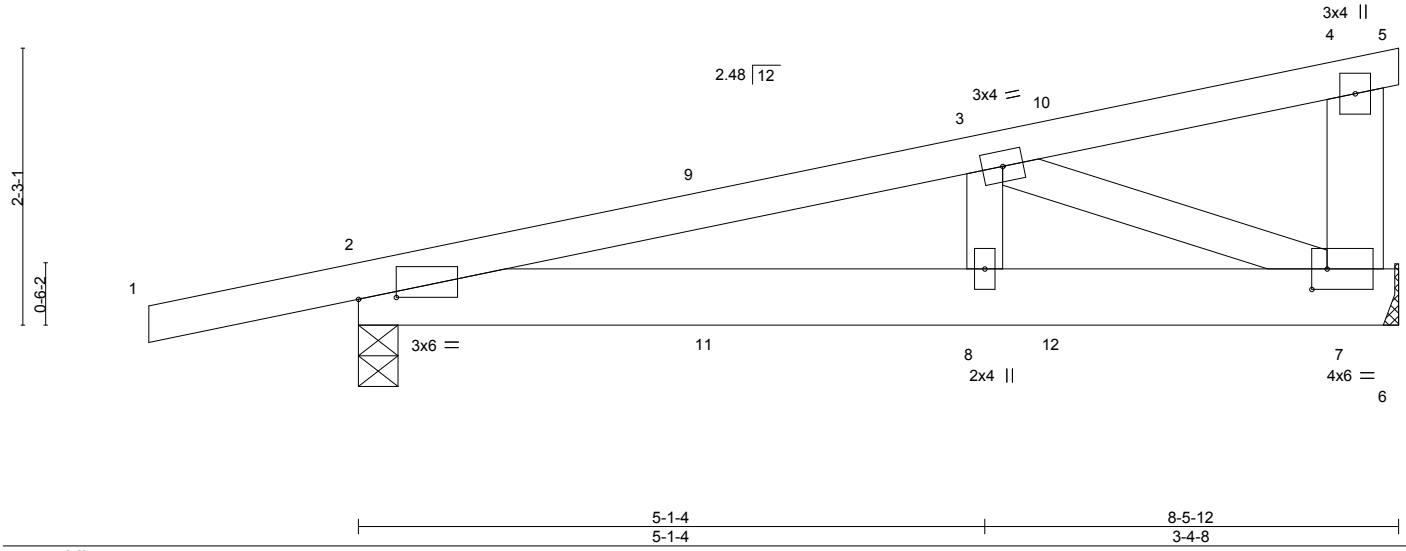

Plate Offsets (X,Y)-- [2:0-3-11,0-0-3], [7:0-1-8,0-2-0]

LOADING (psf)		SPACING- 2-0-0		CSI.		DEFL.	in	(loc)	l/defl	L/d	PLATES	GRIP
TCLL	20.0	Plate Grip DOL	1.15	TC	0.20	Vert(LL)	0.02	2-8	>999	240	MT20	244/190
TCDL	10.0	Lumber DOL	1.15	BC	0.14	Vert(CT)	-0.02	2-8	>999	240		
BCLL	0.0 *	Rep Stress Incr	NO	WB	0.12	Horz(CT)	0.00	7	n/a	n/a		
BCDL	10.0	Code IRC2015/TPI2014		Matrix-P							Weight: 44 lb	FT = 20%

LUMBER-
TOP CHORD 2x4 SP No.1
BOT CHORD 2x6 SP No.1
WEBS 2x4 SP No.2 *Except*
4-7: 2x6 SP No.1

BRACING-
TOP CHORD Structural wood sheathing directly applied or 6-0-0 oc purlins, except end verticals.
BOT CHORD Rigid ceiling directly applied or 10-0-0 oc bracing.

REACTIONS. (size) 7=Mechanical, 2=0-3-14
Max Horz 2=71(LC 19)
Max Uplift 7=-150(LC 4), 2=-203(LC 4)
Max Grav 7=370(LC 1), 2=458(LC 1)

FORCES. (lb) - Max. Comp./Max. Ten. - All forces 250 (lb) or less except when shown.
TOP CHORD 2-3=-639/228
BOT CHORD 2-8=-255/587, 7-8=-255/587
WEBS 3-7=-631/274

NOTES-
1) Wind: ASCE 7-10; Vult=130mph Vasd=103mph; TCDL=6.0psf; BCDL=6.0psf; h=15ft; Cat. II; Exp C; Enclosed; MWFRS (envelope); porch left and right exposed; Lumber DOL=1.60 plate grip DOL=1.60
2) This truss has been designed for a 10.0 psf bottom chord live load nonconcurrent with any other live loads.
3) * This truss has been designed for a live load of 30.0psf on the bottom chord in all areas where a rectangle 3-6-0 tall by 2-0-0 wide will fit between the bottom chord and any other members.
4) Refer to girder(s) for truss to truss connections.
5) Provide mechanical connection (by others) of truss to bearing plate capable of withstanding 100 lb uplift at joint(s) except (jt=lb) 7=150, 2=203.
6) Hanger(s) or other connection device(s) shall be provided sufficient to support concentrated load(s) 17 lb down and 17 lb up at 2-10-15, 17 lb down and 17 lb up at 2-10-15, and 40 lb down and 54 lb up at 5-8-14, and 40 lb down and 54 lb up at 5-8-14 on top chord, and 3 lb down and 22 lb up at 2-10-15, 3 lb down and 22 lb up at 2-10-15, and 21 lb down and 42 lb up at 5-8-14, and 21 lb down and 42 lb up at 5-8-14 on bottom chord. The design/selection of such connection device(s) is the responsibility of others.
7) In the LOAD CASE(S) section, loads applied to the face of the truss are noted as front (F) or back (B).

LOAD CASE(S) Standard
1) Dead + Roof Live (balanced): Lumber Increase=1.15, Plate Increase=1.15
Uniform Loads (plf)
Vert: 1-4=-60, 4-5=-60, 2-6=-20
Concentrated Loads (lb)
Vert: 10=-31(F=-15, B=-15) 12=-20(F=-10, B=-10)

July 26,2024

WARNING - Verify design parameters and READ NOTES ON THIS AND INCLUDED MITEK REFERENCE PAGE MII-7473 rev. 1/2/2023 BEFORE USE.
Design valid for use only with MiTek® connectors. This design is based only upon parameters shown, and is for an individual building component, not a truss system. Before use, the building designer must verify the applicability of design parameters and properly incorporate this design into the overall building design. Bracing indicated is to prevent buckling of individual truss web and/or chord members only. Additional temporary and permanent bracing is always required for stability and to prevent collapse with possible personal injury and property damage. For general guidance regarding the fabrication, storage, delivery, erection and bracing of trusses and truss systems, see **ANSI/TPI1 Quality Criteria and DSB-22** available from Truss Plate Institute (www.tpinst.org) and **BCSI Building Component Safety Information** available from the Structural Building Component Association (www.sbcacomponents.com)

ENGINEERING BY TRENCO A MiTek Affiliate
818 Soundside Road
Edenton, NC 27932

Symbols

PLATE LOCATION AND ORIENTATION

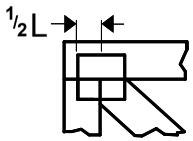

Center plate on joint unless x, y offsets are indicated. Dimensions are in ft-in-sixteenths. Apply plates to both sides of truss and fully embed teeth.

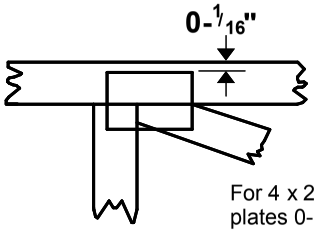

For 4 x 2 orientation, locate plates 0- 1/16" from outside edge of truss.

This symbol indicates the required direction of slots in connector plates.

* Plate location details available in MiTek software or upon request.

PLATE SIZE

4 x 4

The first dimension is the plate width measured perpendicular to slots. Second dimension is the length parallel to slots.

LATERAL BRACING LOCATION

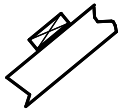

Indicated by symbol shown and/or by text in the bracing section of the output. Use T or I bracing if indicated.

BEARING

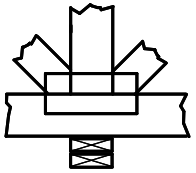

Indicates location where bearings (supports) occur. Icons vary but reaction section indicates joint number/letter where bearings occur. Min size shown is for crushing only.

Industry Standards:

ANSI/TPI1: National Design Specification for Metal Plate Connected Wood Truss Construction.
DSB-22: Design Standard for Bracing.
BCSI: Building Component Safety Information, Guide to Good Practice for Handling, Installing, Restraining & Bracing of Metal Plate Connected Wood Trusses.

Numbering System

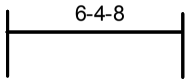

dimensions shown in ft-in-sixteenths
(Drawings not to scale)

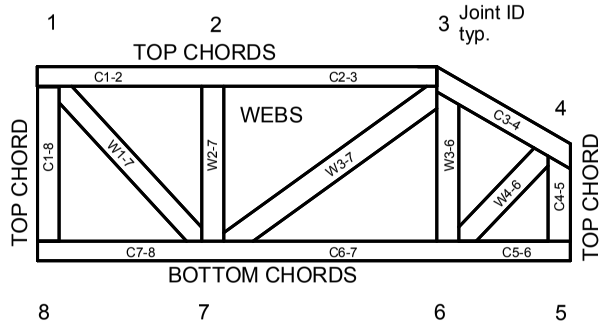

JOINTS ARE GENERALLY NUMBERED/LETTERED CLOCKWISE AROUND THE TRUSS STARTING AT THE JOINT FARTHEST TO THE LEFT.

CHORDS AND WEBS ARE IDENTIFIED BY END JOINT NUMBERS/LETTERS.

Product Code Approvals

ICC-ES Reports:

ESR-1988, ESR-2362, ESR-2685, ESR-3282
ESR-4722, ESL-1388

Design General Notes

Trusses are designed for wind loads in the plane of the truss unless otherwise shown.

Lumber design values are in accordance with ANSI/TPI 1 section 6.3 These truss designs rely on lumber values established by others.

© 2023 MiTek® All Rights Reserved

MiTek®

ENGINEERING BY TRENCO
A MiTek Affiliate

General Safety Notes

Failure to Follow Could Cause Property Damage or Personal Injury

1. Additional stability bracing for truss system, e.g. diagonal or X-bracing, is always required. See BCSI.
2. Truss bracing must be designed by an engineer. For wide truss spacing, individual lateral braces themselves may require bracing, or alternative Tor I bracing should be considered.
3. Never exceed the design loading shown and never stack materials on inadequately braced trusses.
4. Provide copies of this truss design to the building designer, erection supervisor, property owner and all other interested parties.
5. Cut members to bear tightly against each other.
6. Place plates on each face of truss at each joint and embed fully. Knots and wane at joint locations are regulated by ANSI/TPI 1.
7. Design assumes trusses will be suitably protected from the environment in accord with ANSI/TPI 1.
8. Unless otherwise noted, moisture content of lumber shall not exceed 19% at time of fabrication.
9. Unless expressly noted, this design is not applicable for use with fire retardant, preservative treated, or green lumber.
10. Camber is a non-structural consideration and is the responsibility of truss fabricator. General practice is to camber for dead load deflection.
11. Plate type, size, orientation and location dimensions indicated are minimum plating requirements.
12. Lumber used shall be of the species and size, and in all respects, equal to or better than that specified.
13. Top chords must be sheathed or purlins provided at spacing indicated on design.
14. Bottom chords require lateral bracing at 10 ft. spacing, or less, if no ceiling is installed, unless otherwise noted.
15. Connections not shown are the responsibility of others.
16. Do not cut or alter truss member or plate without prior approval of an engineer.
17. Install and load vertically unless indicated otherwise.
18. Use of green or treated lumber may pose unacceptable environmental, health or performance risks. Consult with project engineer before use.
19. Review all portions of this design (front, back, words and pictures) before use. Reviewing pictures alone is not sufficient.
20. Design assumes manufacture in accordance with ANSI/TPI 1 Quality Criteria.
21. The design does not take into account any dynamic or other loads other than those expressly stated.

Client:		Date:	1/10/2025
Project:		Input by:	Neal Baggett
Address:		Job Name:	Lot 71 Magnolia Hills
		Project #:	

BM1 Kerto-S LVL 1.750" X 9.250" 2-Ply - PASSED

Level: Level

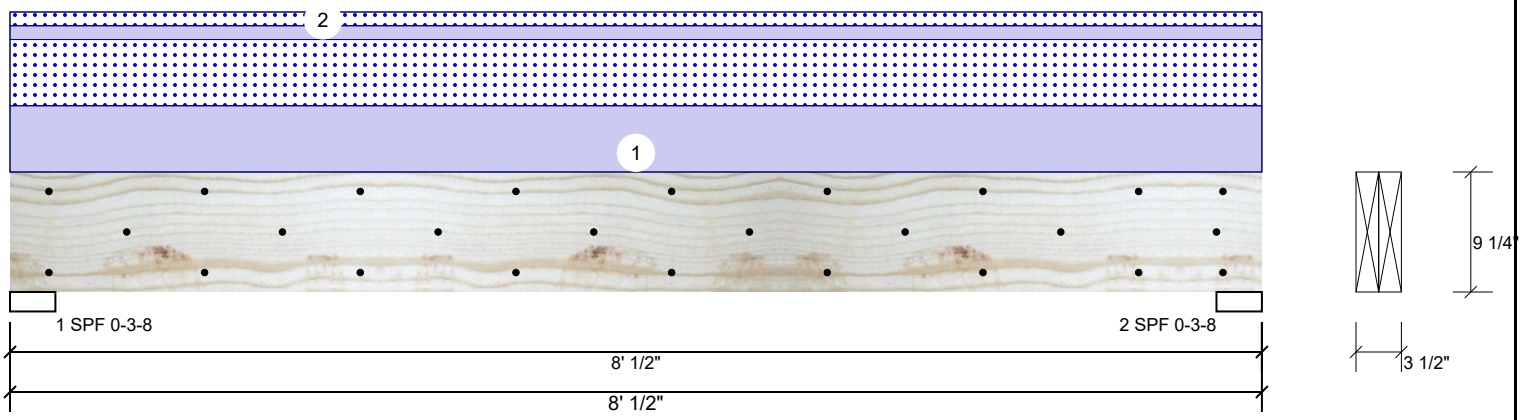

Member Information

Type:	Girder	Application:	Floor
Plies:	2	Design Method:	ASD
Moisture Condition:	Dry	Building Code:	IBC/IRC 2015
Deflection LL:	480	Load Sharing:	No
Deflection TL:	360	Deck:	Not Checked
Importance:	Normal - II		
Temperature:	Temp <= 100°F		

Reactions UNPATTERNED lb (Uplift)

Brg	Direction	Live	Dead	Snow	Wind	Const
1	Vertical	0	1034	1005	0	0
2	Vertical	0	1034	1005	0	0

Bearings

Bearing	Length	Dir.	Cap.	React D/L lb	Total	Ld. Case	Ld. Comb.
1 - SPF	3.500"	Vert	39%	1034 / 1005	2039	L	D+S
2 - SPF	3.500"	Vert	39%	1034 / 1005	2039	L	D+S

Analysis Results

Analysis	Actual	Location	Allowed	Capacity	Comb.	Case
Moment	3646 ft-lb	4' 1/4"	14423 ft-lb	0.253 (25%)	D+S	L
Unbraced	3646 ft-lb	4' 1/4"	9125 ft-lb	0.400 (40%)	D+S	L
Shear	1825 lb	1' 3/4"	7943 lb	0.230 (23%)	D+S	L
LL Defl inch	0.047 (L/1949)	4' 5/16"	0.190 (L/480)	0.246 (25%)	S	L
TL Defl inch	0.095 (L/961)	4' 5/16"	0.253 (L/360)	0.375 (37%)	D+S	L

Design Notes

1. Provide support to prevent lateral movement and rotation at the end bearings. Lateral support may also be required at the interior bearings by the building code.
2. Fasten all plies using 3 rows of 10d Box nails (.128x3") at 12" o.c. Maximum end distance not to exceed 6".
3. Refer to last page of calculations for fasteners required for specified loads.
4. Girders are designed to be supported on the bottom edge only.
5. Top loads must be supported equally by all plies.
6. Top must be laterally braced at end bearings.
7. Bottom must be laterally braced at end bearings.
8. Lateral slenderness ratio based on single ply width.

ID	Load Type	Location	Trib Width	Side	Dead 0.9	Live 1	Snow 1.15	Wind 1.6	Const. 1.25	Comments
1	Uniform			Far Face	207 PLF	0 PLF	207 PLF	0 PLF	0 PLF	A4
2	Uniform			Top	43 PLF	0 PLF	43 PLF	0 PLF	0 PLF	P1
	Self Weight				7 PLF					

Notes

Calculated Structured Designs is responsible only of the structural adequacy of this component based on the design criteria and loadings shown. It is the responsibility of the customer and/or the contractor to ensure the component suitability of the intended application, and to verify the dimensions and loads.

Lumber

1. Dry service conditions, unless noted otherwise
2. LVL not to be treated with fire retardant or corrosive chemicals

Handling & Installation

1. LVL beams must not be cut or drilled
2. Refer to manufacturer's product information regarding installation requirements, multi-ply fastening details, beam strength values, and code approvals
3. Damaged Beams must not be used
4. Design assumes top edge is laterally restrained
5. Provide lateral support at bearing points to avoid lateral displacement and rotation
6. For flat roofs provide proper drainage to prevent ponding

This design is valid until 6/28/2026

Manufacturer Info

Metsä Wood
301 Merritt 7 Building, 2nd Floor
Norwalk, CT 06851
(800) 622-5850
www.metsawood.com/us

Client:		Date:	1/10/2025
Project:		Input by:	Neal Baggett
Address:		Job Name:	Lot 71 Magnolia Hills
		Project #:	

BM1 Kerto-S LVL 1.750" X 9.250" 2-Ply - PASSED

Level: Level

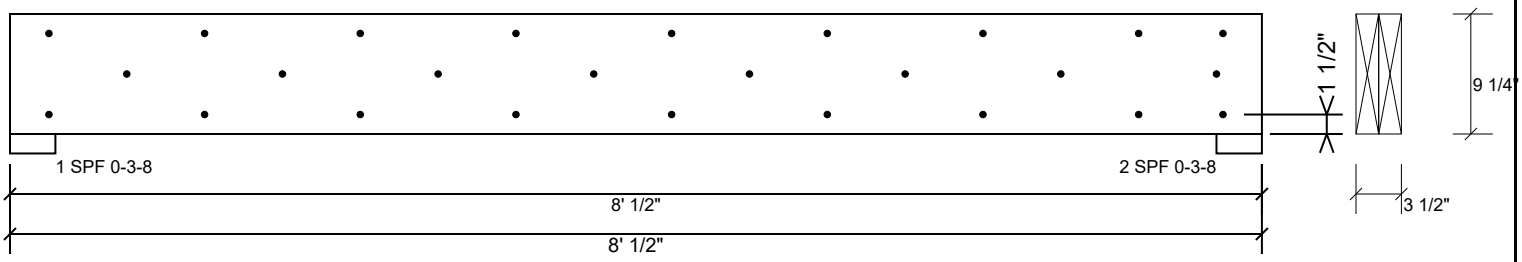

Multi-Ply Analysis

Fasten all plies using 3 rows of 10d Box nails (.128x3") at 12" o.c.. Maximum end distance not to exceed 6".

Capacity	73.3 %
Load	207.0 PLF
Yield Limit per Foot	282.4 PLF
Yield Limit per Fastener	94.1 lb.
C_M	1
Yield Mode	IV
Edge Distance	1 1/2"
Min. End Distance	3"
Load Combination	D+S
Duration Factor	1.15

Notes

Calculated Structured Designs is responsible only of the structural adequacy of this component based on the design criteria and loadings shown. It is the responsibility of the customer and/or the contractor to ensure the component suitability of the intended application, and to verify the dimensions and loads.

Lumber

1. Dry service conditions, unless noted otherwise
2. LVL not to be treated with fire retardant or corrosive chemicals

Handling & Installation

1. LVL beams must not be cut or drilled
2. Refer to manufacturer's product information regarding installation requirements, multi-ply fastening details, beam strength values, and code approvals
3. Damaged Beams must not be used
4. Design assumes top edge is laterally restrained
5. Provide lateral support at bearing points to avoid lateral displacement and rotation
6. For flat roofs provide proper drainage to prevent ponding

This design is valid until 6/28/2026

Manufacturer Info

Metsä Wood
301 Merritt 7 Building, 2nd Floor
Norwalk, CT 06851
(800) 622-5850
www.metsawood.com/us

Client:		Date:	1/10/2025
Project:		Input by:	Neal Baggett
Address:		Job Name:	Lot 71 Magnolia Hills
		Project #:	

BM3 Kerto-S LVL 1.750" X 11.875" 2-Ply - PASSED

Level: Level

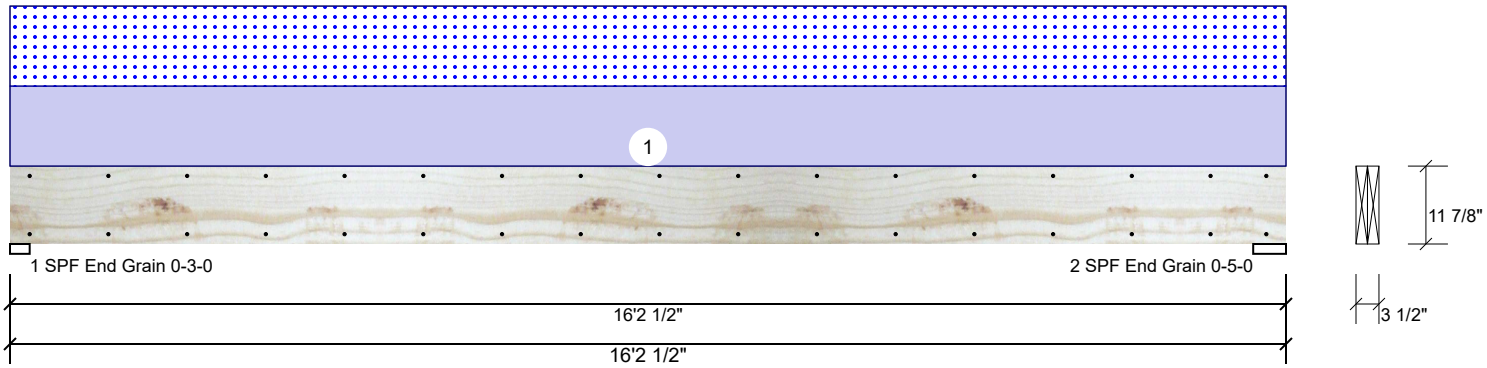

Member Information

Type:	Girder	Application:	Floor
Plies:	2	Design Method:	ASD
Moisture Condition:	Dry	Building Code:	IBC/IRC 2015
Deflection LL:	480	Load Sharing:	No
Deflection TL:	360	Deck:	Not Checked
Importance:	Normal - II		
Temperature:	Temp <= 100°F		

Reactions UNPATTERNED lb (Uplift)

Brg	Direction	Live	Dead	Snow	Wind	Const
1	Vertical	0	732	658	0	0
2	Vertical	0	747	671	0	0

Bearings

Bearing	Length	Dir.	Cap.	React D/L lb	Total	Ld. Case	Ld. Comb.
1 - SPF End Grain	3.000"	Vert	16%	732 / 658	1389	L	D+S
2 - SPF End Grain	5.000"	Vert	10%	747 / 671	1418	L	D+S

Analysis Results

Analysis	Actual	Location	Allowed	Capacity	Comb.	Case
Moment	5315 ft-lb	8' 1/4"	22897 ft-lb	0.232 (23%)	D+S	L
Unbraced	5315 ft-lb	8' 1/4"	6354 ft-lb	0.836 (84%)	D+S	L
Shear	1184 lb	14'9 5/8"	10197 lb	0.116 (12%)	D+S	L
LL Defl inch	0.121 (L/1557)	8' 5/16"	0.392 (L/480)	0.308 (31%)	S	L
TL Defl inch	0.255 (L/737)	8' 5/16"	0.522 (L/360)	0.489 (49%)	D+S	L

Design Notes

1. Provide support to prevent lateral movement and rotation at the end bearings. Lateral support may also be required at the interior bearings by the building code.
2. Fasten all plies using 2 rows of 10d Box nails (.128x3") at 12" o.c. Maximum end distance not to exceed 6".
3. Refer to last page of calculations for fasteners required for specified loads.
4. Girders are designed to be supported on the bottom edge only.
5. Top loads must be supported equally by all plies.
6. Top must be laterally braced at end bearings.
7. Bottom must be laterally braced at end bearings.
8. Lateral slenderness ratio based on single ply width.

ID	Load Type	Location	Trib Width	Side	Dead 0.9	Live 1	Snow 1.15	Wind 1.6	Const. 1.25	Comments
1	Uniform			Top	82 PLF	0 PLF	82 PLF	0 PLF	0 PLF	XH1
	Self Weight				9 PLF					

Notes

Calculated Structured Designs is responsible only of the structural adequacy of this component based on the design criteria and loadings shown. It is the responsibility of the customer and/or the contractor to ensure the component suitability of the intended application, and to verify the dimensions and loads.

Lumber

1. Dry service conditions, unless noted otherwise
2. LVL not to be treated with fire retardant or corrosive chemicals

Handling & Installation

1. LVL beams must not be cut or drilled
2. Refer to manufacturer's product information regarding installation requirements, multi-ply fastening details, beam strength values, and code approvals
3. Damaged Beams must not be used
4. Design assumes top edge is laterally restrained
5. Provide lateral support at bearing points to avoid lateral displacement and rotation
6. For flat roofs provide proper drainage to prevent ponding

This design is valid until 6/28/2026

Manufacturer Info

Metsä Wood
301 Merritt 7 Building, 2nd Floor
Norwalk, CT 06851
(800) 622-5850
www.metsawood.com/us

Client:		Date:	1/10/2025
Project:		Input by:	Neal Baggett
Address:		Job Name:	Lot 71 Magnolia Hills
		Project #:	

BM3 Kerto-S LVL 1.750" X 11.875" 2-Ply - PASSED

Level: Level

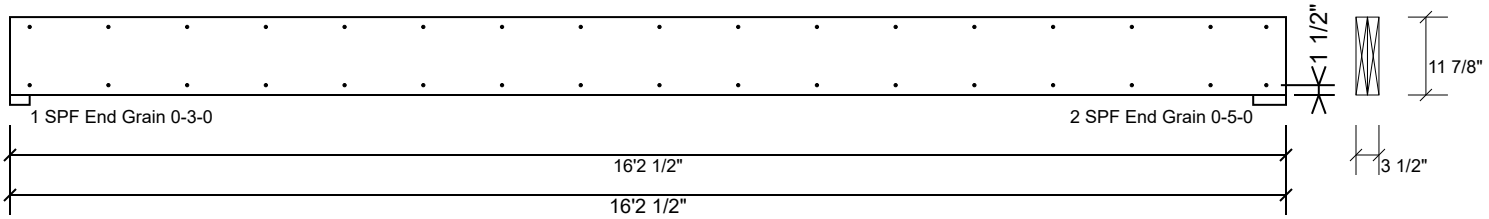

Multi-Ply Analysis

Fasten all plies using 2 rows of 10d Box nails (.128x3") at 12" o.c.. Maximum end distance not to exceed 6".

Capacity	0.0 %
Load	0.0 PLF
Yield Limit per Foot	163.7 PLF
Yield Limit per Fastener	81.9 lb.
C_M	1
Yield Mode	IV
Edge Distance	1 1/2"
Min. End Distance	3"
Load Combination	
Duration Factor	1.00

Notes

Calculated Structured Designs is responsible only of the structural adequacy of this component based on the design criteria and loadings shown. It is the responsibility of the customer and/or the contractor to ensure the component suitability of the intended application, and to verify the dimensions and loads.

Lumber

1. Dry service conditions, unless noted otherwise
2. LVL not to be treated with fire retardant or corrosive chemicals

Handling & Installation

1. LVL beams must not be cut or drilled
2. Refer to manufacturer's product information regarding installation requirements, multi-ply fastening details, beam strength values, and code approvals
3. Damaged Beams must not be used
4. Design assumes top edge is laterally restrained
5. Provide lateral support at bearing points to avoid lateral displacement and rotation
6. For flat roofs provide proper drainage to prevent ponding

This design is valid until 6/28/2026

Manufacturer Info

Metsä Wood
301 Merritt 7 Building, 2nd Floor
Norwalk, CT 06851
(800) 622-5850
www.metsawood.com/us

Client:		Date:	1/10/2025
Project:		Input by:	Neal Baggett
Address:		Job Name:	Lot 71 Magnolia Hills
		Project #:	

BM4 SP #2 2.000" X 12.000" 2-Ply - PASSED

Level: Level

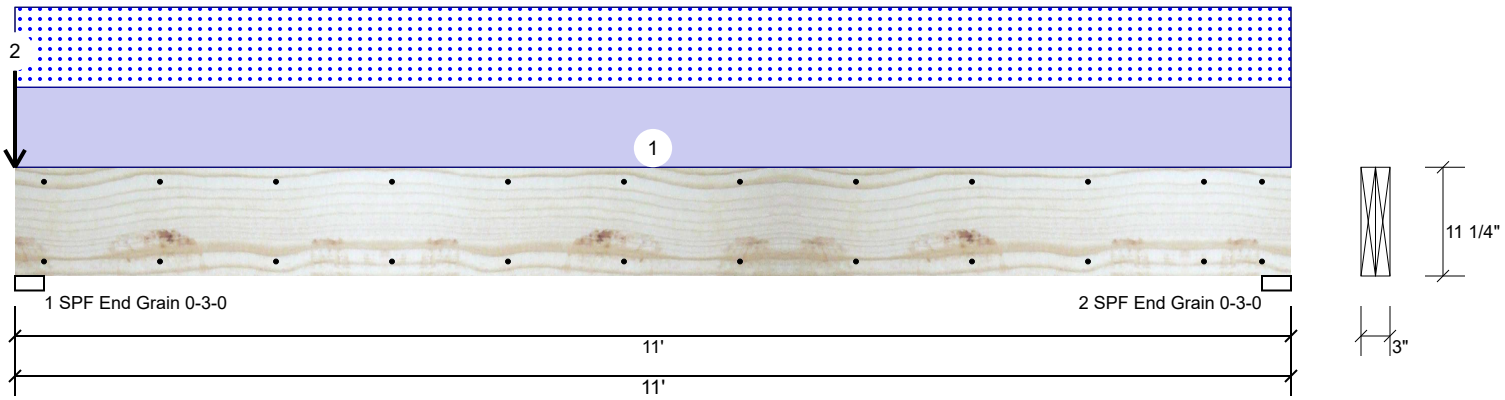

Member Information

Type:	Girder	Application:	Floor
Plies:	2	Design Method:	ASD
Moisture Condition:	Dry	Building Code:	IBC/IRC 2015
Deflection LL:	480	Load Sharing:	No
Deflection TL:	360	Deck:	Not Checked
Importance:	Normal - II		
Temperature:	Temp <= 100°F		

Reactions UNPATTERNED lb (Uplift)

Brg	Direction	Live	Dead	Snow	Wind	Const
1	Vertical	0	1359	1359	0	0
2	Vertical	0	770	770	0	0

Bearings

Bearing	Length	Dir.	Cap.	React D/L lb	Total	Ld. Case	Ld. Comb.
1 - SPF End Grain	3.000"	Vert	53%	1359 / 1359	2718	L	D+S
2 - SPF End Grain	3.000"	Vert	30%	770 / 770	1540	L	D+S

Analysis Results

Analysis	Actual	Location	Allowed	Capacity	Comb.	Case
Moment	3951 ft-lb	5'6"	4548 ft-lb	0.869 (87%)	D+S	L
Unbraced	3951 ft-lb	5'6"	3954 ft-lb	0.999 (100%)	D+S	L
Shear	1208 lb	1'2 1/4"	4528 lb	0.267 (27%)	D+S	L
LL Defl inch	0.081 (L/1583)	5'6"	0.266 (L/480)	0.303 (30%)	S	L
TL Defl inch	0.161 (L/791)	5'6"	0.354 (L/360)	0.455 (45%)	D+S	L

Design Notes

1. Provide support to prevent lateral movement and rotation at the end bearings. Lateral support may also be required at the interior bearings by the building code.
2. Fasten all plies using 2 rows of 10d Box nails (.128x3") at 12" o.c. Maximum end distance not to exceed 6".
3. Refer to last page of calculations for fasteners required for specified loads.
4. Girders are designed to be supported on the bottom edge only.
5. Top loads must be supported equally by all plies.
6. Top must be laterally braced at a maximum of 7' 3/16" o.c.
7. Bottom must be laterally braced at end bearings.
8. Lateral slenderness ratio based on single ply width.

ID	Load Type	Location	Trib Width	Side	Dead 0.9	Live 1	Snow 1.15	Wind 1.6	Const. 1.25	Comments
1	Uniform			Top	140 PLF	0 PLF	140 PLF	0 PLF	0 PLF	A5
2	Point	0-0-0		Top	589 lb	0 lb	589 lb	0 lb	0 lb	H1

Manufacturer Info

This design is valid until 6/28/2026

Client:		Date:	1/10/2025
Project:		Input by:	Neal Baggett
Address:		Job Name:	Lot 71 Magnolia Hills
		Project #:	

BM4 SP #2 2.000" X 12.000" 2-Ply - PASSED

Level: Level

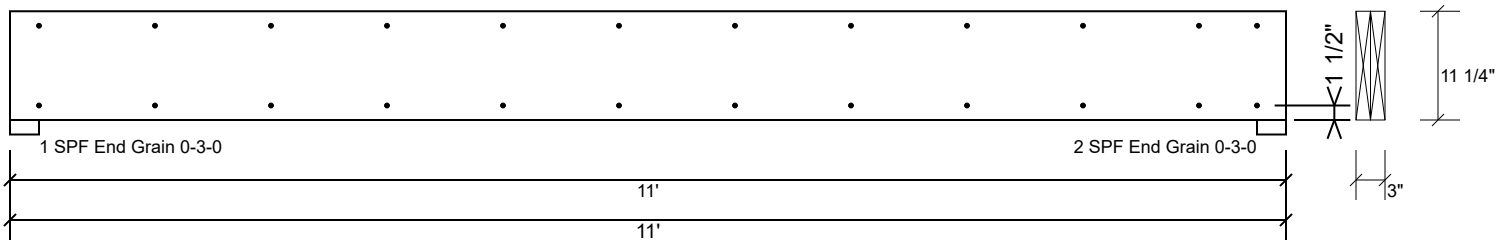

Multi-Ply Analysis

Fasten all plies using 2 rows of 10d Box nails (.128x3") at 12" o.c.. Maximum end distance not to exceed 6".

Capacity	0.0 %
Load	0.0 PLF
Yield Limit per Foot	202.6 PLF
Yield Limit per Fastener	101.3 lb.
C_M	1
Yield Mode	IV
Edge Distance	1 1/2"
Min. End Distance	3"
Load Combination	
Duration Factor	1.00

Manufacturer Info

This design is valid until 6/28/2026

Client:		Date:	1/10/2025
Project:		Input by:	Neal Baggett
Address:		Job Name:	Lot 71 Magnolia Hills
		Project #:	

BM2 Kerto-S LVL 1.750" X 9.250" 2-Ply - PASSED

Level: Level

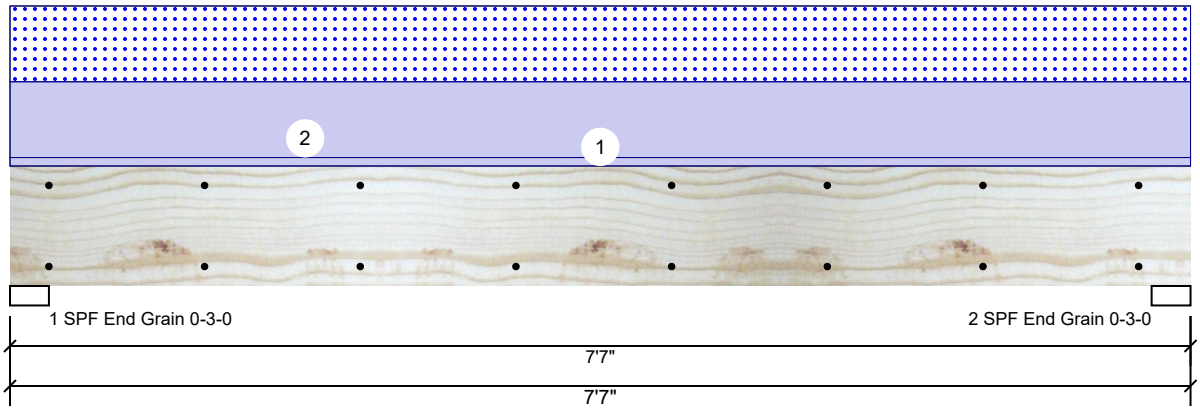

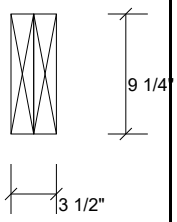

Member Information

Type:	Girder	Application:	Floor
Plies:	2	Design Method:	ASD
Moisture Condition:	Dry	Building Code:	IBC/IRC 2015
Deflection LL:	480	Load Sharing:	No
Deflection TL:	360	Deck:	Not Checked
Importance:	Normal - II		
Temperature:	Temp <= 100°F		

Reactions UNPATTERNED lb (Uplift)

Brg	Direction	Live	Dead	Snow	Wind	Const
1	Vertical	0	1157	1016	0	0
2	Vertical	0	1157	1016	0	0

Bearings

Bearing	Length	Dir.	Cap.	React D/L lb	Total	Ld. Case	Ld. Comb.
1 - SPF End Grain	3.000"	Vert	25%	1157 / 1016	2173	L	D+S
2 - SPF End Grain	3.000"	Vert	25%	1157 / 1016	2173	L	D+S

Analysis Results

Analysis	Actual	Location	Allowed	Capacity	Comb.	Case
Moment	3723 ft-lb	3'9 1/2"	14423 ft-lb	0.258 (26%)	D+S	L
Unbraced	3723 ft-lb	3'9 1/2"	9445 ft-lb	0.394 (39%)	D+S	L
Shear	1594 lb	1' 1/4"	7943 lb	0.201 (20%)	D+S	L
LL Defl inch	0.041 (L/2087)	3'9 9/16"	0.180 (L/480)	0.230 (23%)	S	L
TL Defl inch	0.089 (L/976)	3'9 9/16"	0.240 (L/360)	0.369 (37%)	D+S	L

Design Notes

1. Provide support to prevent lateral movement and rotation at the end bearings. Lateral support may also be required at the interior bearings by the building code.
2. Fasten all plies using 2 rows of 10d Box nails (.128x3") at 12" o.c. Maximum end distance not to exceed 6".
3. Refer to last page of calculations for fasteners required for specified loads.
4. Girders are designed to be supported on the bottom edge only.
5. Top loads must be supported equally by all plies.
6. Top must be laterally braced at end bearings.
7. Bottom must be laterally braced at end bearings.
8. Lateral slenderness ratio based on single ply width.

ID	Load Type	Location	Trib Width	Side	Dead 0.9	Live 1	Snow 1.15	Wind 1.6	Const. 1.25	Comments
1	Uniform			Top	30 PLF	0 PLF	0 PLF	0 PLF	0 PLF	WALL
2	Uniform			Top	268 PLF	0 PLF	268 PLF	0 PLF	0 PLF	A TRUSSES
	Self Weight				7 PLF					

Notes

Calculated Structured Designs is responsible only of the structural adequacy of this component based on the design criteria and loadings shown. It is the responsibility of the customer and/or the contractor to ensure the component suitability of the intended application, and to verify the dimensions and loads.

Lumber

1. Dry service conditions, unless noted otherwise
2. LVL not to be treated with fire retardant or corrosive chemicals

Handling & Installation

1. LVL beams must not be cut or drilled
2. Refer to manufacturer's product information regarding installation requirements, multi-ply fastening details, beam strength values, and code approvals
3. Damaged Beams must not be used
4. Design assumes top edge is laterally restrained
5. Provide lateral support at bearing points to avoid lateral displacement and rotation
6. For flat roofs provide proper drainage to prevent ponding

This design is valid until 6/28/2026

Manufacturer Info

Metsä Wood
301 Merritt 7 Building, 2nd Floor
Norwalk, CT 06851
(800) 622-5850
www.metsawood.com/us

Client:		Date:	1/10/2025
Project:		Input by:	Neal Baggett
Address:		Job Name:	Lot 71 Magnolia Hills
		Project #:	

BM2 Kerto-S LVL 1.750" X 9.250" 2-Ply - PASSED

Level: Level

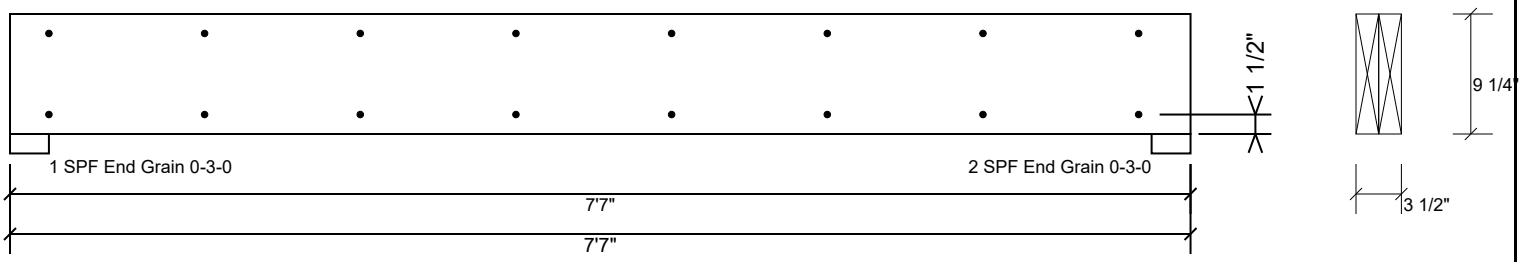

Multi-Ply Analysis

Fasten all plies using 2 rows of 10d Box nails (.128x3") at 12" o.c.. Maximum end distance not to exceed 6".

Capacity	0.0 %
Load	0.0 PLF
Yield Limit per Foot	163.7 PLF
Yield Limit per Fastener	81.9 lb.
C_M	1
Yield Mode	IV
Edge Distance	1 1/2"
Min. End Distance	3"
Load Combination	
Duration Factor	1.00

Notes

Calculated Structured Designs is responsible only of the structural adequacy of this component based on the design criteria and loadings shown. It is the responsibility of the customer and/or the contractor to ensure the component suitability of the intended application, and to verify the dimensions and loads.

Lumber

1. Dry service conditions, unless noted otherwise
2. LVL not to be treated with fire retardant or corrosive chemicals

Handling & Installation

1. LVL beams must not be cut or drilled
2. Refer to manufacturer's product information regarding installation requirements, multi-ply fastening details, beam strength values, and code approvals
3. Damaged Beams must not be used
4. Design assumes top edge is laterally restrained
5. Provide lateral support at bearing points to avoid lateral displacement and rotation
6. For flat roofs provide proper drainage to prevent ponding

This design is valid until 6/28/2026

Manufacturer Info

Metsä Wood
301 Merritt 7 Building, 2nd Floor
Norwalk, CT 06851
(800) 622-5850
www.metsawood.com/us

Client:		Date:	1/10/2025
Project:		Input by:	Neal Baggett
Address:		Job Name:	Lot 71 Magnolia Hills
		Project #:	

GDH Kerto-S LVL 1.750" X 11.875" 2-Ply - PASSED

Level: Level

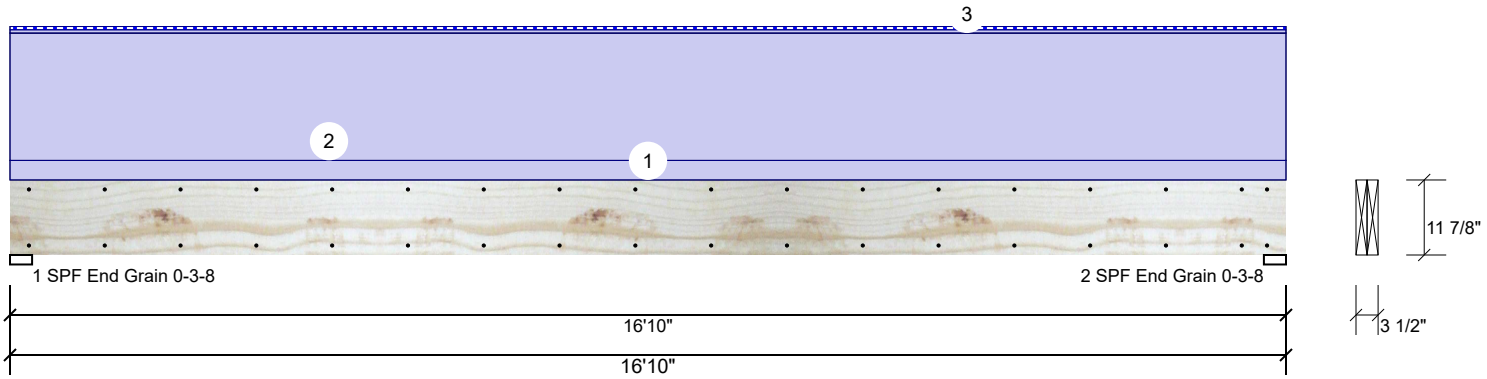

Member Information

Type:	Girder	Application:	Floor
Plies:	2	Design Method:	ASD
Moisture Condition:	Dry	Building Code:	IBC/IRC 2015
Deflection LL:	480	Load Sharing:	No
Deflection TL:	360	Deck:	Not Checked
Importance:	Normal - II		
Temperature:	Temp <= 100°F		

Reactions UNPATTERNED lb (Uplift)

Brg	Direction	Live	Dead	Snow	Wind	Const
1	Vertical	0	2056	84	0	0
2	Vertical	0	2056	84	0	0

Bearings

Bearing	Length	Dir.	Cap.	React D/L lb	Total	Ld. Case	Ld. Comb.
1 - SPF End Grain	3.500"	Vert	21%	2056 / 84	2140	L	D+S
2 - SPF End Grain	3.500"	Vert	21%	2056 / 84	2140	L	D+S

Analysis Results

Analysis	Actual	Location	Allowed	Capacity	Comb.	Case
Moment	8186 ft-lb	8'5"	17919 ft-lb	0.457 (46%)	D	Uniform
Unbraced	8521 ft-lb	8'5"	8525 ft-lb	1.000 (100%)	D+S	L
Shear	1762 lb	15'6 5/8"	7980 lb	0.221 (22%)	D	Uniform
LL Defl inch	0.017 (L/11235)	8'5 1/16"	0.409 (L/480)	0.043 (4%)	S	L
TL Defl inch	0.445 (L/442)	8'5 1/16"	0.546 (L/360)	0.815 (81%)	D+S	L

Design Notes

1 Provide support to prevent lateral movement and rotation at the end bearings. Lateral support may also be required at the interior bearings by the building code.
2 Fasten all plies using 2 rows of 10d Box nails (.128x3") at 12" o.c. Maximum end distance not to exceed 6".
3 Refer to last page of calculations for fasteners required for specified loads.
4 Girders are designed to be supported on the bottom edge only.
5 Top loads must be supported equally by all plies.
6 Top must be laterally braced at a maximum of 11'2 11/16" o.c.
7 Bottom must be laterally braced at end bearings.
8 Lateral slenderness ratio based on single ply width.

ID	Load Type	Location	Trib Width	Side	Dead 0.9	Live 1	Snow 1.15	Wind 1.6	Const. 1.25	Comments
1	Uniform			Top	30 PLF	0 PLF	0 PLF	0 PLF	0 PLF	WALL
2	Uniform			Top	195 PLF	0 PLF	0 PLF	0 PLF	0 PLF	G1-GE
3	Tie-In Far	0-0-0 to 16-10-0	0-6-0	Far Face	20 PSF	0 PSF	20 PSF	0 PSF	0 PSF	RAKE OH
3	Tie-In Near	0-0-0 to 16-10-0	0-0-0	Top	20 PSF	0 PSF	20 PSF	0 PSF	0 PSF	RAKE OH
	Self Weight				9 PLF					

Notes

Calculated Structured Designs is responsible only of the structural adequacy of this component based on the design criteria and loadings shown. It is the responsibility of the customer and/or the contractor to ensure the component suitability of the intended application, and to verify the dimensions and loads.

Lumber

1. Dry service conditions, unless noted otherwise
2. LVL not to be treated with fire retardant or corrosive chemicals

Handling & Installation

1. LVL beams must not be cut or drilled
2. Refer to manufacturer's product information regarding installation requirements, multi-ply fastening details, beam strength values, and code approvals
3. Damaged Beams must not be used
4. Design assumes top edge is laterally restrained
5. Provide lateral support at bearing points to avoid lateral displacement and rotation
6. For flat roofs provide proper drainage to prevent ponding

This design is valid until 6/28/2026

Manufacturer Info

Metsä Wood
301 Merritt 7 Building, 2nd Floor
Norwalk, CT 06851
(800) 622-5850
www.metsawood.com/us

Client:		Date:	1/10/2025
Project:		Input by:	Neal Baggett
Address:		Job Name:	Lot 71 Magnolia Hills
		Project #:	

GDH Kerto-S LVL 1.750" X 11.875" 2-Ply - PASSED

Level: Level

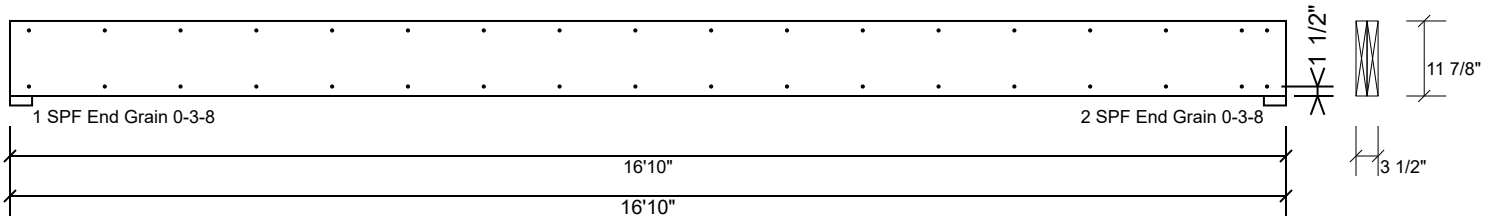

Multi-Ply Analysis

Fasten all plies using 2 rows of 10d Box nails (.128x3") at 12" o.c.. Maximum end distance not to exceed 6".

Capacity	5.3 %
Load	10.0 PLF
Yield Limit per Foot	188.3 PLF
Yield Limit per Fastener	94.1 lb.
C_M	1
Yield Mode	IV
Edge Distance	1 1/2"
Min. End Distance	3"
Load Combination	D+S
Duration Factor	1.15

Notes

Calculated Structured Designs is responsible only of the structural adequacy of this component based on the design criteria and loadings shown. It is the responsibility of the customer and/or the contractor to ensure the component suitability of the intended application, and to verify the dimensions and loads.

Lumber

1. Dry service conditions, unless noted otherwise
2. LVL not to be treated with fire retardant or corrosive chemicals

Handling & Installation

1. LVL beams must not be cut or drilled
2. Refer to manufacturer's product information regarding installation requirements, multi-ply fastening details, beam strength values, and code approvals
3. Damaged Beams must not be used
4. Design assumes top edge is laterally restrained
5. Provide lateral support at bearing points to avoid lateral displacement and rotation
6. For flat roofs provide proper drainage to prevent ponding

This design is valid until 6/28/2026

Manufacturer Info

Metsä Wood
301 Merritt 7 Building, 2nd Floor
Norwalk, CT 06851
(800) 622-5850
www.metsawood.com/us