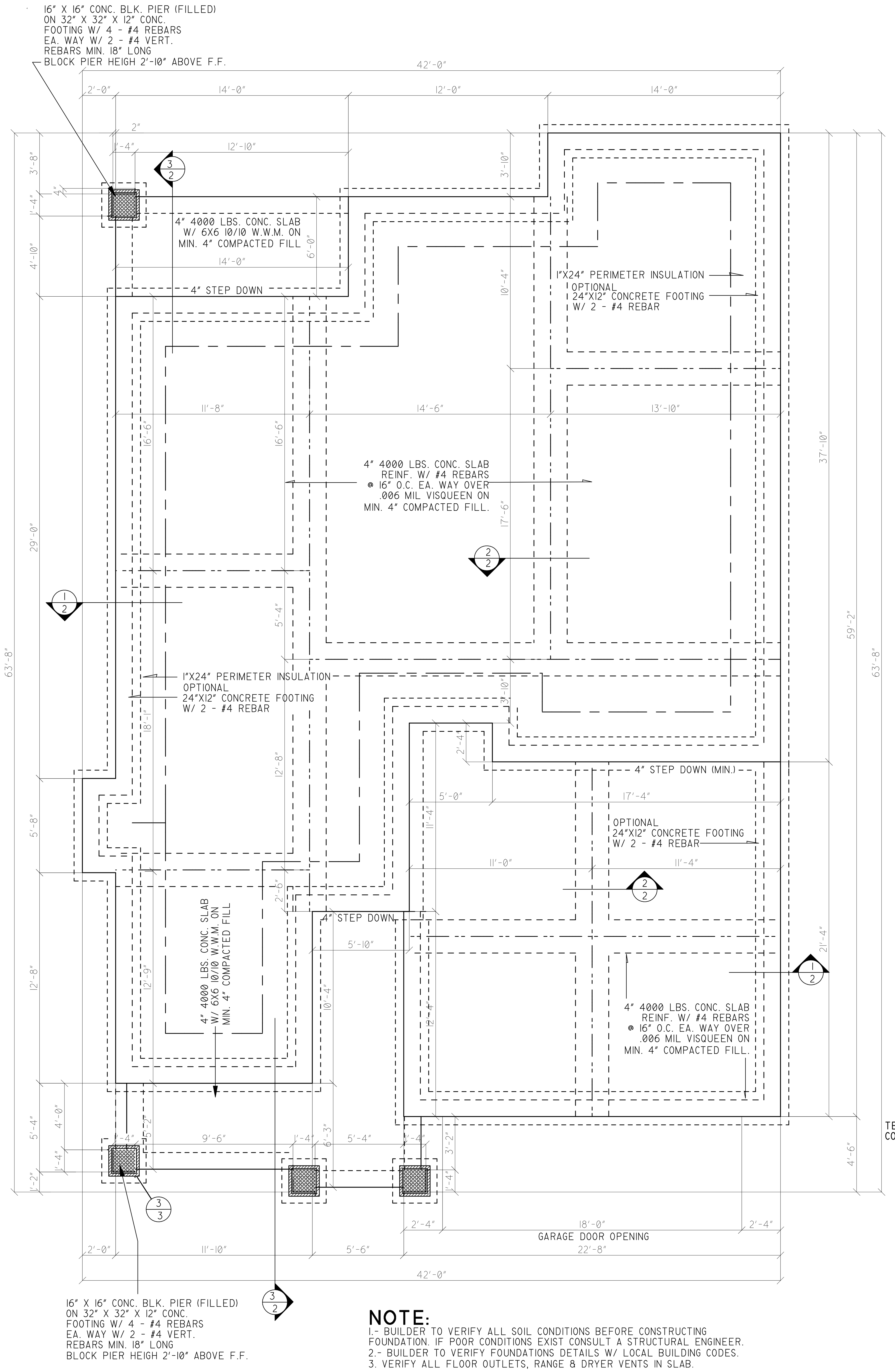

NOTE:

1.- BUILDER TO VERIFY ALL SOIL CONDITIONS BEFORE CONSTRUCTING FOUNDATION. IF POOR CONDITIONS EXIST CONSULT A STRUCTURAL ENGINEER.
2.- BUILDER TO VERIFY FOUNDATIONS DETAILS W/ LOCAL BUILDING CODES.
3. VERIFY ALL FLOOR OUTLETS, RANGE & DRYER VENTS IN SLAB.

NOTE:

ALL DIMENSIONS ARE FROM EXTERIOR STUD WALL. ALLOW 5" TO ALL EXTERIOR DIMENSIONS WHERE OPTIONAL BRICK LEDGE IS NEEDED.

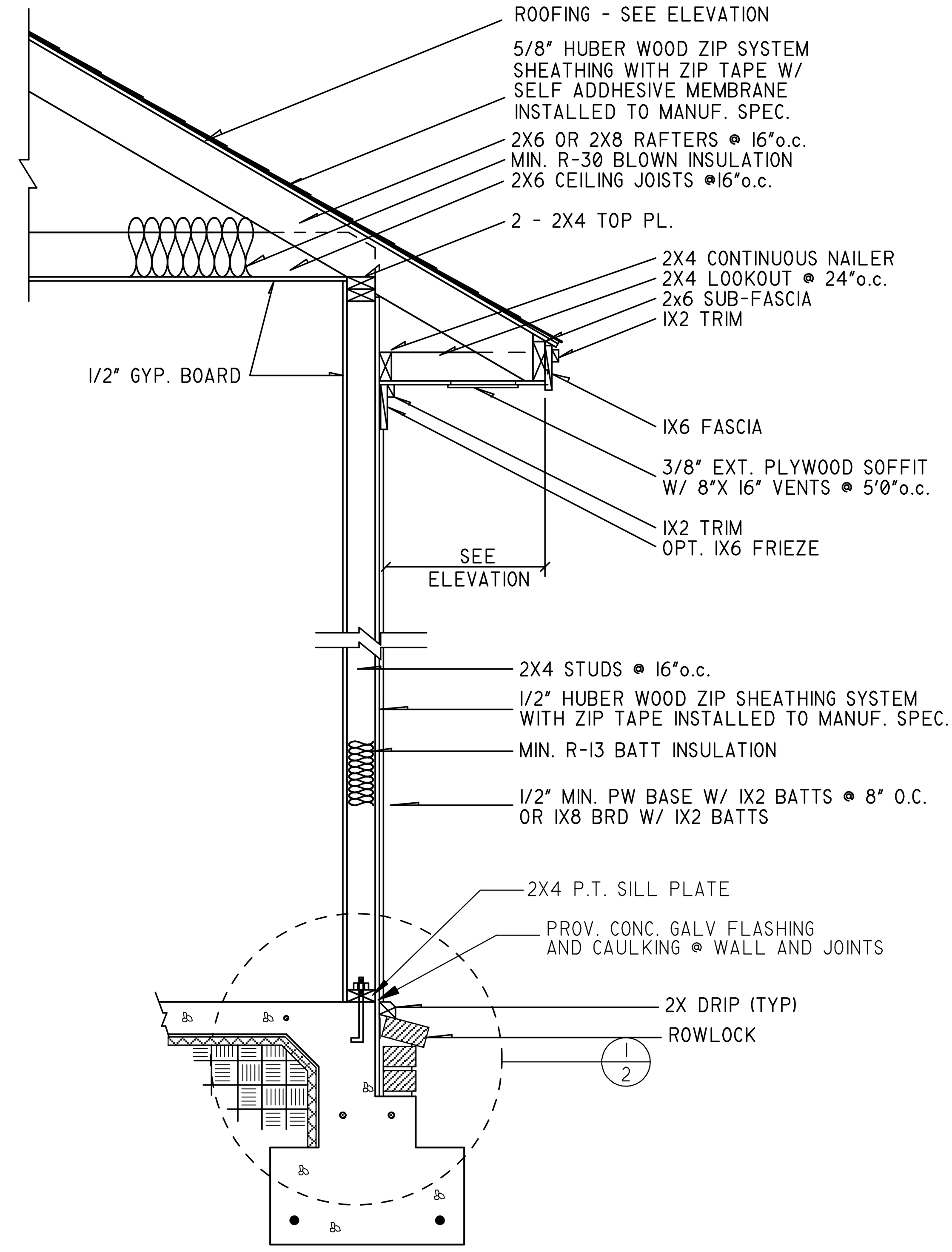

MONOSLAB WALL SECTION
3/4" = 1'-0"

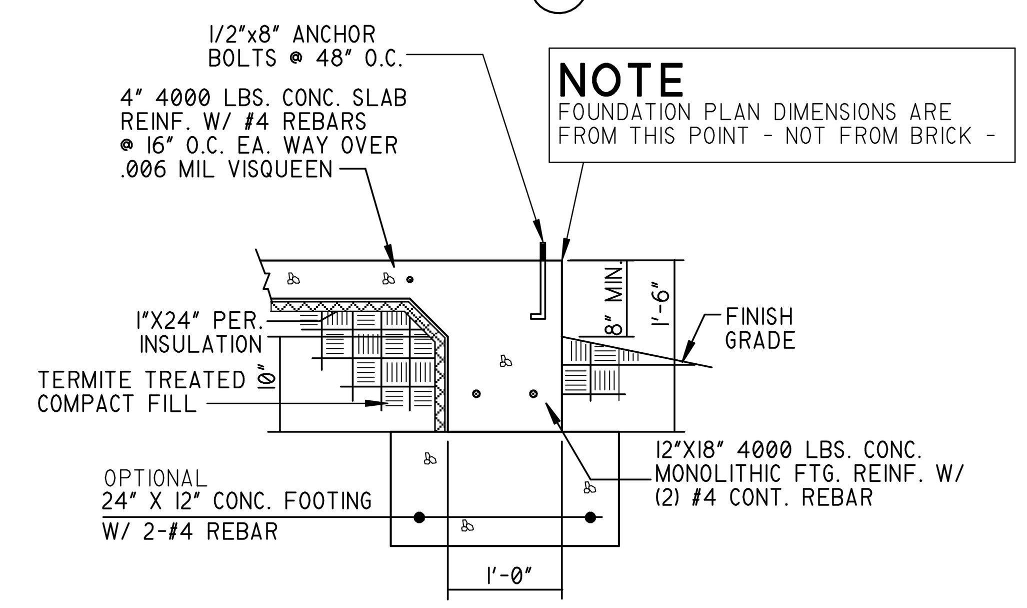

1 TYP. MONOLITHIC FTG. DETAIL
3/4" = 1'-0"

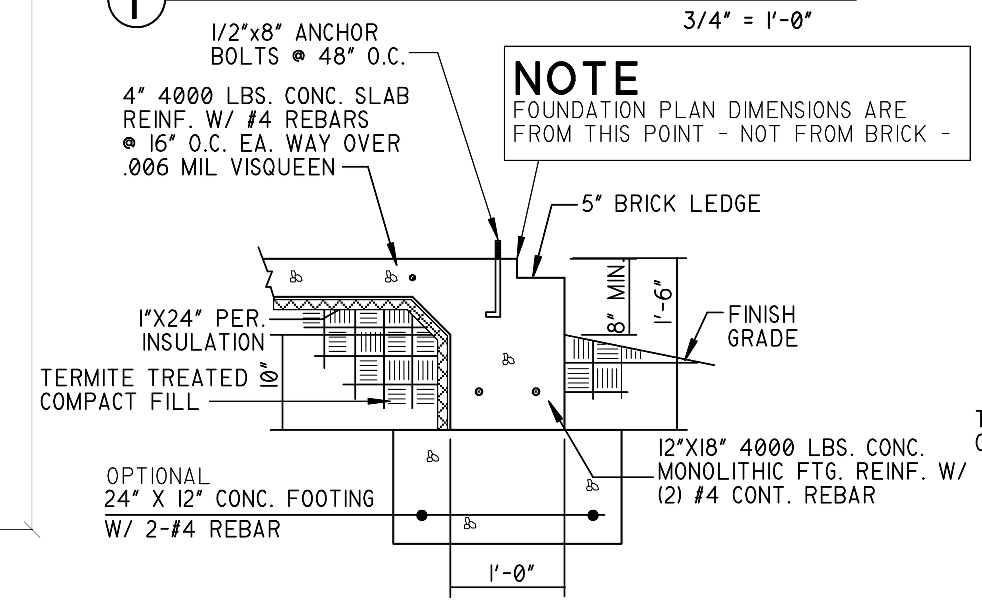

1 OPT. MONOLITHIC FTG. DETAIL
3/4" = 1'-0"

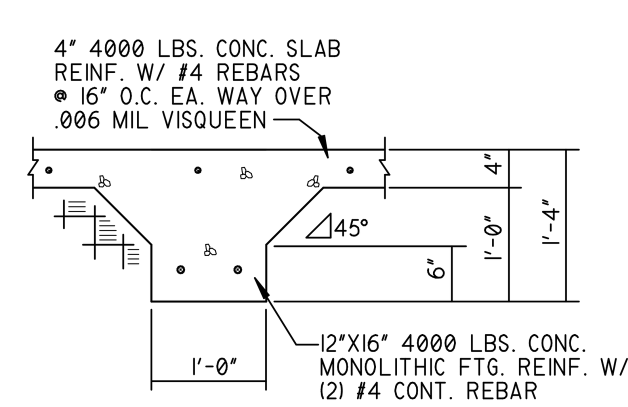

2 TYP.BEARING FTG. DETAIL
3/4" = 1'-0"

PLUMBING NOTES:

1. PLUMBING SHALL MEET ALL LOCAL CODES.

2. IF WATER HEATER IS LOCATED ANYWHERE, EXCEPT GARAGE OR BASEMENT, PROVIDE METAL DRAIN PAN WITH AUXILLARY DRAIN TO EXTERIOR.

3. ALL GAS WATER HEATERS SHALL BE VENTED AT TOPOUT.

4. PROVIDE INSIDE MAIN WATER CUT-OFF.

5. PROVIDE BLOCKING IF WALL PLATES OR JOISTS ARE CUT INTO.

6. BUILDER TO LOCATE ALL HOSE BIBB LOCATONS.

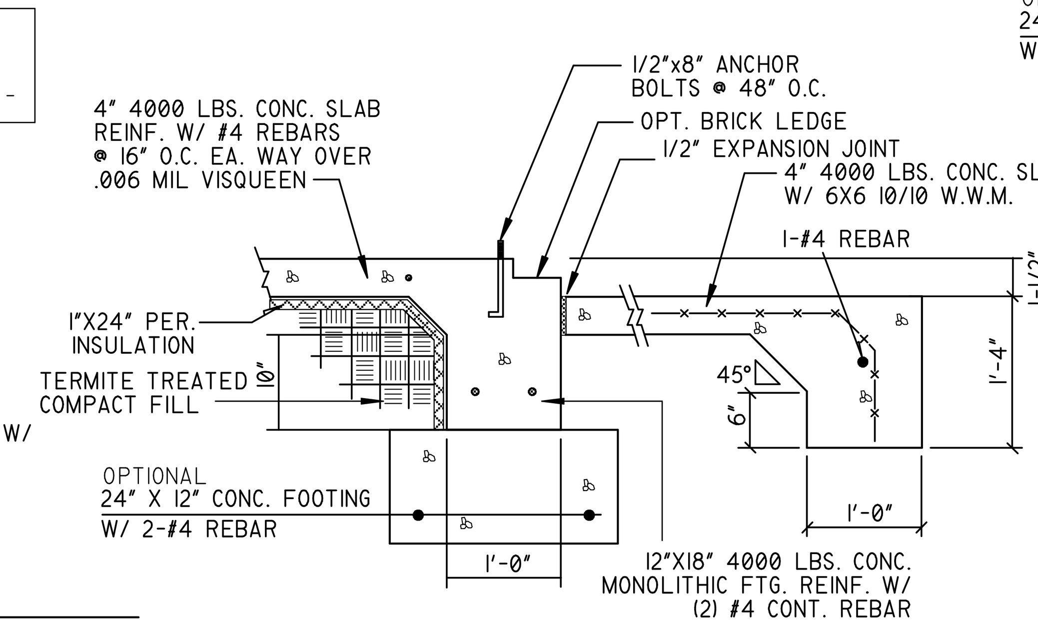

3 OPT. BRICK LEDGE STEP DOWN @ PORCH
3/4" = 1'-0"

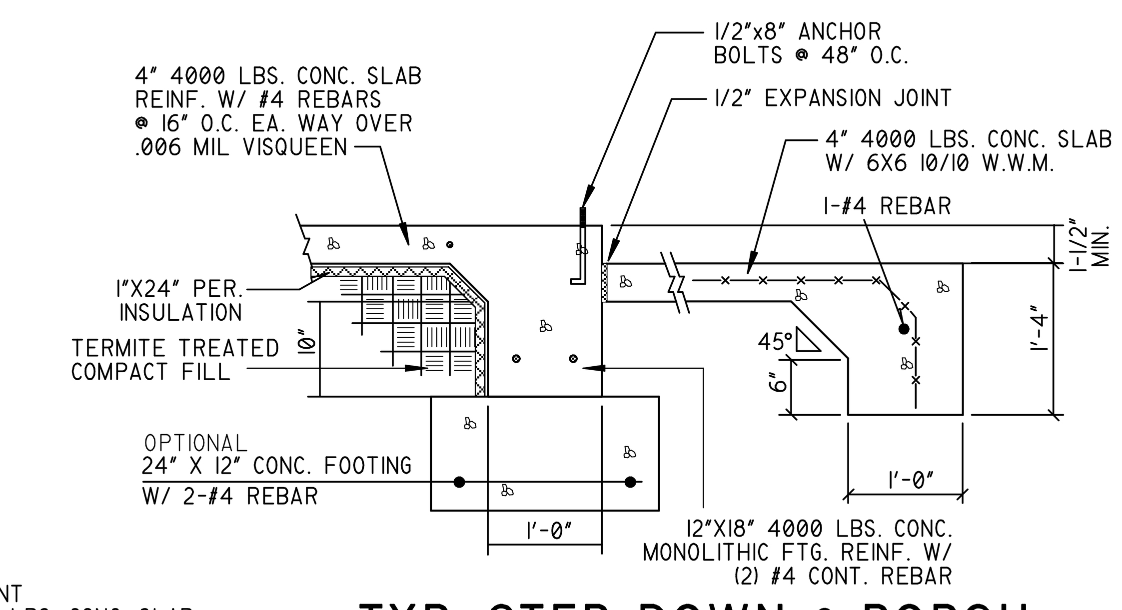

3 TYP. STEP DOWN @ PORCH
3/4" = 1'-0"

GENERAL NOTES:

In case of conflict between the General Notes below and the specifications the more rigid requirement shall govern unless amended in writing by the Engineer.

DESIGN DATA

1. Design Codes - (All latest editions unless noted)
 - -American Concrete Institute (ACI)
 - -American Institute of Steel Construction (AISC)
 - -American Welding Society (AWS)
 - -Southern Standard Building Code (SSBC)
 - -American National Standards Institute, Inc. (ANSI A58.1-1982) Minimum Design Loads for Buildings and Other Structures
2. Material Specifications and Design Stresses
 - -Anchor Bolts and Embedded Steel.............Fy = 36,000 psi (ASTM A36)
 - -Structural Steel UNO...................................Fy = 36,000 psi (ASTM A36)
 - -Cast-in-place Concrete
 - -Footings...F'c = 3,000 psi at 28-days.
 - -Interior slabs-on-grade.............................f'c = 3,000 psi at 28-days.
 - -Ext. exposed concrete)air entrained)......F'c = 4,000 psi at 28-days.
 - -Reinforcing Steel
 - -#2 and #3 bar3 only...................................Fy = 40,000 psi (ASTM A615, Grade 40)
 - -#4 and larger bars.....................................Fy = 60,000 psi (ASTM A615, Grade 60)
3. Design Soil Bearing Pressures
 - -Reference Soil and Foundation Investigation by Grubbs, Garner, & Hoskyn, Inc. Consulting Engineers, Little Rock, AR.
 - -Footings on natural soils are designed for a maximum soil bearing pressure of 2,000 psf.
 - -Footings on compacted engineered fill are designed for maximum soil bearing pressure of 2,000 psf.
 - -If the soil at the footing bearing elevations shown is of questionable bearing value, the Engineer or Architect shall be notified immediately.
 - -After footing excavations are completed and before placing concrete, the excavated area shall be inspected and approved by the Owner selected independent testing laboratory as specified.

GENERAL INFORMATION

1. All columns shall be centered on grid lines unless noted otherwise.
2. All column footings shall be centered on columns unless noted otherwise.
3. All wall footings shall be centered on walls unless noted otherwise.
4. For concrete reinforcing at corners, see typical corner bar detail.
5. For slab-on-grade construction joint detail, see typical slab-on-grade detail.
6. All fill material under structure shall be sandy clay or clayey sand exhibiting a liquid limit less than 35. Fill material shall be placed in loose lifts not to exceed 8" and compacted to a density of not less than 95% of Modified Proctor Maximum Dry Density (ASTM D-1557) at or slightly wet of optimum moisture content. In place moisture and density of each lift shall be determined by in-situ field tests prior to placing additional fill.
7. Where noted C.J. on plan, provide Keyed Joint in floor slab.
8. A 6-mil polyethylene film vapor barrier shall be placed below all interior slabs-on-grade.
9. Provide a 4-inch clean medium to coarse sand or gravel compacted drainage fill below all interior slabs-on-grade.

CAST-IN-PLACE CONCRETE

1. Arrangement and bending of reinforcing steel shall be in accordance with ACI detailing manual, latest edition.
2. Reinforcing steel shall be new and all bars over #2 shall be deformed.
3. Where reinforcing bars are shown continuous, lap bars 36-bar diameters or 24-bar diameters at tension or compression splices respectively (12" minimum).
4. Provide suitable wire spacers, chairs, ties, etc., for supporting reinforcing steel in the proper position while placing concrete.
5. Concrete protective covering for reinforcement at surfaces not exposed directly to the ground shall be 3/4" for slabs, joists, and walls and 1-1/2" for beam stirrups and column ties or spirals.
6. Concrete protective covering for reinforcement at surfaces which will be exposed to the weather or be in contact with the ground shall be 2" for bars larger than #5 and 1-1/2" for #5 bars or smaller. Provide 3" cover below and at ends of footing bars.
7. Location and sizes of openings, sleeve, etc., required for other trades must be verified by these trades before placing concrete.

CONCRETE MASONRY UNITS

1. Place vertical reinforcing bars at corners, jambs of openings, below beam bearing, and in walls as indicated on the drawings.
2. Dowell vertical reinforcing bars out of the structure below with bars of the same size and spacing above.
3. Lap splice bars in masonry 40 bar diameters.
4. Place horizontal bars in 8" deep bond beam units at top of wall.
5. Continue bond beam units and reinforcing uninterrupted around corners and across wall intersections.
6. Metal masonry-course reinforcing shall be truss type conforming to ASTM A82, not less than 9 gauge, galvanized at exterior walls. Furnish material with prefabricated corners and tees. Reinforcing shall be used in all partitions, spaced 16" o.c., vertically, joints lapped 6". Place reinforcing in first bed joint above and below all concrete slabs and wall openings.
7. Load bearing concrete masonry units shall conform to ASTM C90, Grade N, Type I, with minimum average compressive strength on net area of 1,100 psi and minimum net area compressive strength of individual units shall be 1,500 psi.
8. Non-loan bearing concrete masonry units shall conform to ASTM C129, Type I.
9. Mortar shall be Type N conforming to property or protection requirements of ASTM C476.
10. All masonry fill concrete shall have a minimim strength at 28-days f'c = 3,000 psi, maximum aggregate shall be 3/8" and shall be placed in maximum lifts of 4'-0".
11. All grout shall conform to ASTM C476, Fine Grout.

NOTICE DUTY OF COOPERATION © 2021 Michael E. Nelson Designs, LLC.
Reproduction of these plans, in any form, without the written consent of the Designer is prohibited.
MICHAEL E. NELSON DESIGNS, LLC or Michael E. Nelson assumes no liability for any HOME constructed from this plan. Release of these plans contemplates further cooperation among the owner, his contractor and the designer. Design and construction are complex. Although the designer and his consultants performed their services with due care and diligence, they cannot guarantee perfection. Communication is imperfect and every contingency cannot be anticipated. Any ambiguity or discrepancy discovered by the use of these plans shall be reported immediately to the designer. Failure to notify the designer compounds misunderstanding and increases construction costs. A failure to cooperate by a simple notice to the designer shall relieve the designer from responsibility for all consequences. Changes made from the plans without the consent of the designer are unauthorized and shall relieve the designer of responsibility for all consequences arriving out of such changes. Only qualified Designer, Architect, Contractor, or Structural Engineer should attempt to modify any portion of this design.
Written dimensions on these drawings shall have precedence over scaled dimensions; contractors shall verify and be responsible for all dimensions and conditions on the job. This office must be notified of any variations from the dimensions and conditions shown by these drawings. Shop details must be submitted to this office for approval before proceeding with fabrication or construction.

MICHAEL E. NELSON
P.B.D. Cert. No. AR-104

MEN DESIGNS

REVISIONS	BY
9/4/24	ML
	24x36

FOUNDATON PLAN (MONOSLAB) / NOTES

MEN5326R

By Michael E. Nelson
A Signature Series of Home Plans
NATIONALLY PUBLISHED
A CUSTOM DESIGN & PLAN MODIFICATION COMPANY
5210 STADIUM BLVD
SUITE A
JONESBORO, AR. 72404
870.931.5777
FAX. 931.5792
MEN DESIGNS
Member
AIBD • CPBD
MICHAELENELSON.COM
800.590.2423

DATE	7-9-21
SCALE	1/4" = 1'-0"
BUILDER	
JOB	MEN5326R
DRAWN BY	CH

2 / 5