Job	Truss	Truss Type	Qty	Ply	PBS\SELMA GEORGIAN GR 2ND FLOOR
72416252	2F1	Truss	11	1	Job Reference (optional)

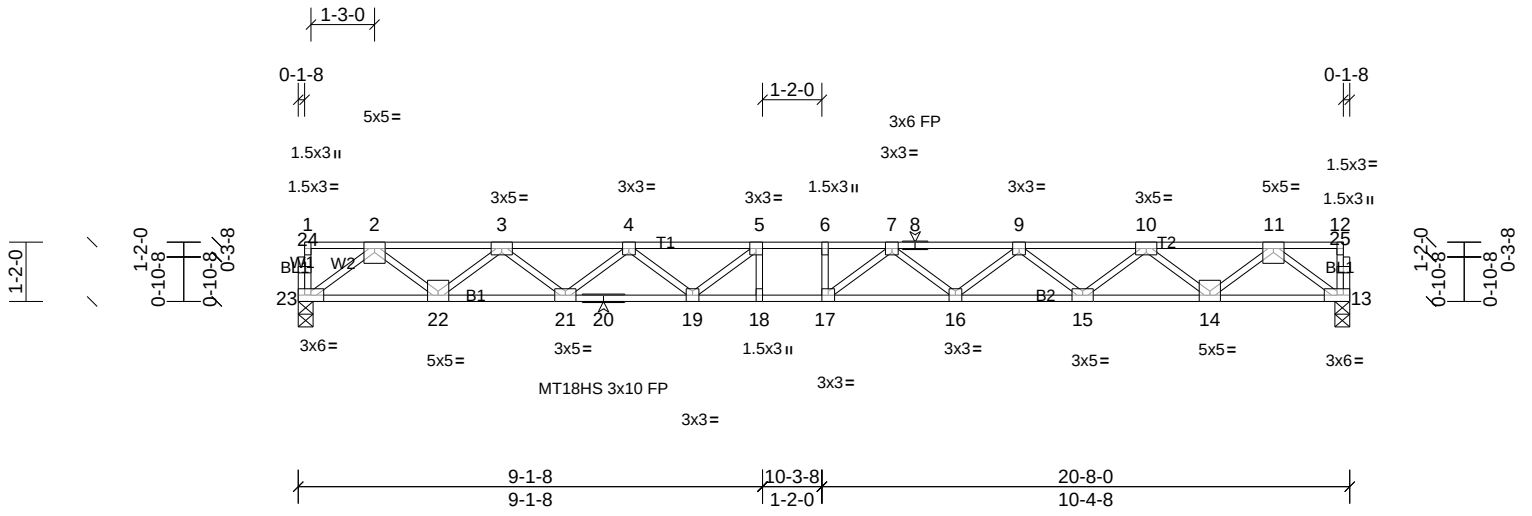

Scale = 1:45.5

Loading	(psf)	Spacing	2-0-0	CSI		DEFL	in	(loc)	l/defl	L/d	PLATES	GRIP
TCLL	40.0	Plate Grip DOL	1.00	TC	0.49	Vert(LL)	-0.45	17	>542	480	MT18HS	244/190
TCDL	10.0	Lumber DOL	1.00	BC	0.65	Vert(CT)	-0.62	16-17	>393	360	MT20	244/190
BCLL	0.0	Rep Stress Incr	YES	WB	0.63	Horz(CT)	0.10	13	n/a	n/a		
BCDL	5.0	Code	IRC2015/TPI2014	Matrix-SH							Weight: 103 lb	FT = 20%F, 11%E

LUMBER

TOP CHORD	2x4 SP SS(flat)
BOT CHORD	2x4 SP SS(flat)
WEBS	2x4 SP No.3(flat)
OTHERS	2x4 SP No.3(flat)

BRACING

TOP CHORD	Structural wood sheathing directly applied or 5-10-15 oc purlins, except end verticals.
BOT CHORD	Rigid ceiling directly applied or 10-0-0 oc bracing.

REACTIONS (lb/size) 13=1117/0-3-8, (min. 0-1-8), 23=1117/0-3-8, (min. 0-1-8)

FORCES (lb) - Max. Comp./Max. Ten. - All forces 250 (lb) or less except when shown.

TOP CHORD	2-3=-2429/0, 3-4=-4099/0, 4-5=-5098/0, 5-6=-5454/0, 6-7=-5454/0, 7-8=-5104/0, 8-9=-5104/0, 9-10=-4097/0, 10-11=-2430/0
BOT CHORD	22-23=0/1408, 21-22=0/3418, 20-21=0/4749, 19-20=0/4749, 18-19=0/5454, 17-18=0/5454, 16-17=0/5416, 15-16=0/4752, 14-15=0/3417, 13-14=0/1408
WEBS	11-13=-1763/0, 2-23=-1763/0, 11-14=0/1330, 2-22=0/1330, 10-14=-1285/0, 3-22=-1287/0, 10-15=0/886, 3-21=0/887, 9-15=-853/0, 4-21=-847/0, 9-16=0/457, 4-19=0/578, 7-16=-443/0, 5-19=-689/23, 7-17=-329/481

NOTES

1) Unbalanced floor live loads have been considered for this design.
2) All plates are MT20 plates unless otherwise indicated.
3) This truss is designed in accordance with the 2015 International Residential Code sections R502.11.1 and R802.10.2 and referenced standard ANSI/TPI 1.
4) Recommend 2x6 strongbacks, on edge, spaced at 10-00-00 oc and fastened to each truss with 3-10d (0.131" X 3") nails. Strongbacks to be attached to walls at their outer ends or restrained by other means.

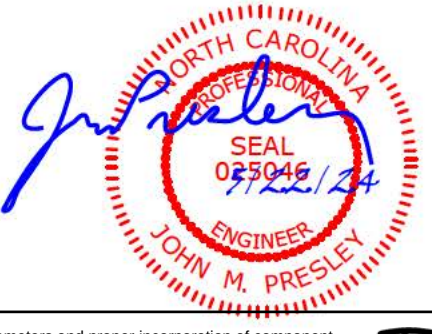

Job	Truss	Truss Type	Qty	Ply	PBS\SELMA GEORGIAN GR 2ND FLOOR
72416252	2F2	Truss	9	1	Job Reference (optional)

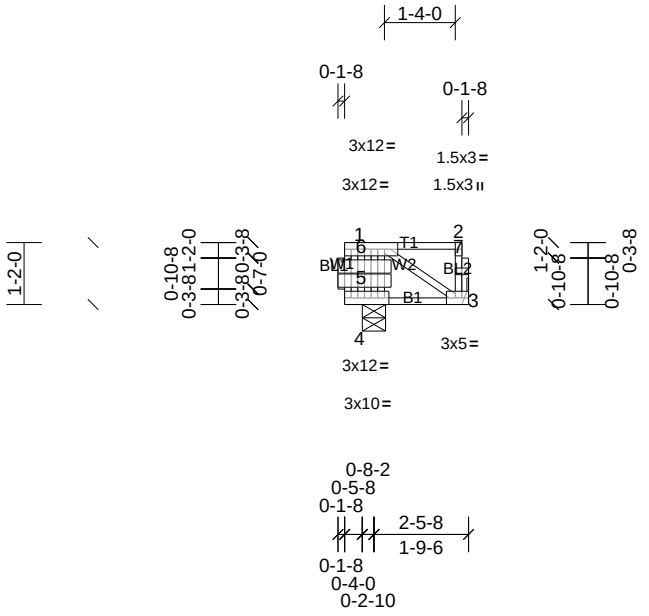

Scale = 1:43.6

Plate Offsets (X, Y): [1:0-3-0,Edge], [3:0-2-0,Edge], [5:0-1-8,0-1-8], [6:0-1-8,0-1-8]

Loading	(psf)	Spacing	1-7-3	CSI		DEFL	in	(loc)	l/defl	L/d	PLATES	GRIP
TCLL	40.0	Plate Grip DOL	1.00	TC	0.22	Vert(LL)	n/a	-	n/a	999	MT20	244/190
TCDL	10.0	Lumber DOL	1.00	BC	0.02	Vert(CT)	0.00	3-4	>999	360		
BCLL	0.0	Rep Stress Incr	NO	WB	0.00	Horz(CT)	n/a	-	n/a	n/a		
BCDL	5.0	Code	IRC2015/TPI2014	Matrix-P							Weight: 21 lb	FT = 20%F, 11%E

LUMBER

TOP CHORD	2x4 SP No.2(flat)
BOT CHORD	2x4 SP No.2(flat)
WEBS	2x4 SP No.3(flat)
OTHERS	2x4 SP No.3(flat)

BRACING

TOP CHORD	Structural wood sheathing directly applied or 2-5-8 oc purlins, except end verticals.
BOT CHORD	Rigid ceiling directly applied or 10-0-0 oc bracing.

REACTIONS (lb/size) 3=76/ Mechanical, (min. 0-1-8), 4=581/0-5-4, (min. 0-1-8)

FORCES (lb) - Max. Comp./Max. Ten. - All forces 250 (lb) or less except when shown.
TOP CHORD 4-5=-553/0, 5-6=-573/0, 1-6=-553/0

NOTES

1) This truss is designed in accordance with the 2015 International Residential Code sections R502.11.1 and R802.10.2 and referenced standard ANSI/TPI 1.
2) Magnitude of user added load(s) on this truss have been applied uniformly across all gravity load cases with no adjustments.
3) Recommend 2x6 strongbacks, on edge, spaced at 10-00-00 oc and fastened to each truss with 3-10d (0.131" X 3") nails. Strongbacks to be attached to walls at their outer ends or restrained by other means.
4) CAUTION, Do not erect truss backwards.

LOAD CASE(S) Standard

1) Dead + Floor Live (balanced): Lumber Increase=1.00, Plate Increase=1.00
   Uniform Loads (lb/ft)
   Vert: 3-4=-8, 1-2=-80
   Concentrated Loads (lb)
   Vert: 1=-500

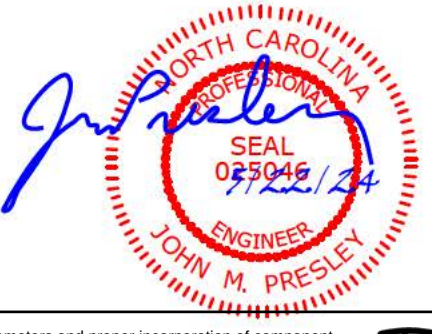

Job	Truss	Truss Type	Qty	Ply	PBS\SELMA GEORGIAN GR 2ND FLOOR
72416252	2F2S	Truss	4	1	Job Reference (optional)

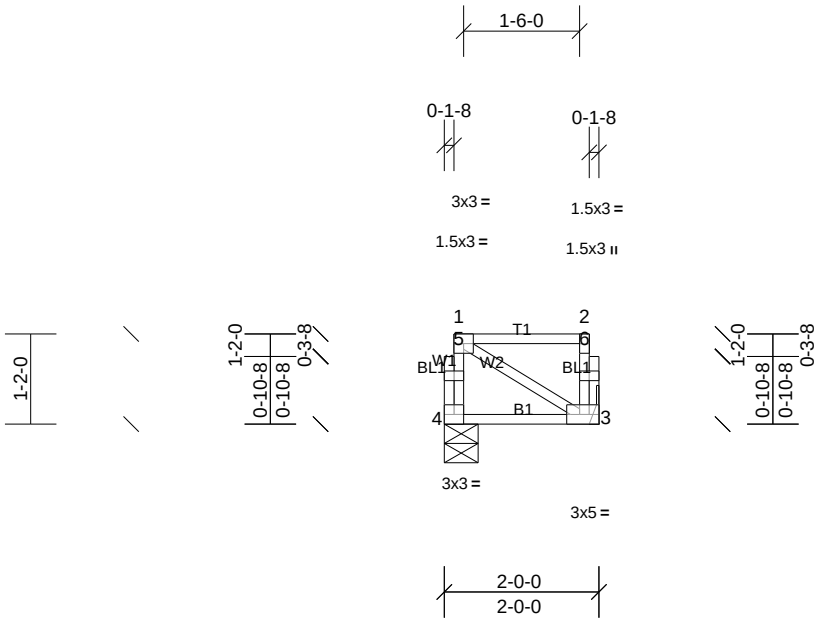

Scale = 1:29.9

Plate Offsets (X, Y): [3:0-2-0,Edge]

Loading	(psf)	Spacing	1-7-3	CSI		DEFL	in	(loc)	l/defl	L/d	PLATES	GRIP
TCLL	40.0	Plate Grip DOL	1.00	TC	0.18	Vert(LL)	n/a	-	n/a	999	MT20	244/190
TCDL	10.0	Lumber DOL	1.00	BC	0.02	Vert(CT)	0.00	3-4	>999	360		
BCLL	0.0	Rep Stress Incr	NO	WB	0.00	Horz(CT)	n/a	-	n/a	n/a		
BCDL	5.0	Code	IRC2015/TPI2014	Matrix-P							Weight: 13 lb	FT = 20%F, 11%E

LUMBER

TOP CHORD	2x4 SP No.2(flat)
BOT CHORD	2x4 SP No.2(flat)
WEBS	2x4 SP No.3(flat)
OTHERS	2x4 SP No.3(flat)

BRACING

TOP CHORD	Structural wood sheathing directly applied or 2-0-0 oc purlins, except end verticals.
BOT CHORD	Rigid ceiling directly applied or 10-0-0 oc bracing.

REACTIONS (lb/size) 3=72/ Mechanical, (min. 0-1-8), 4=72/0-5-4, (min. 0-1-8)

FORCES (lb) - Max. Comp./Max. Ten. - All forces 250 (lb) or less except when shown.

NOTES

1) This truss is designed in accordance with the 2015 International Residential Code sections R502.11.1 and R802.10.2 and referenced standard ANSI/TPI 1.
2) Recommend 2x6 strongbacks, on edge, spaced at 10-00-00 oc and fastened to each truss with 3-10d (0.131" X 3") nails. Strongbacks to be attached to walls at their outer ends or restrained by other means.

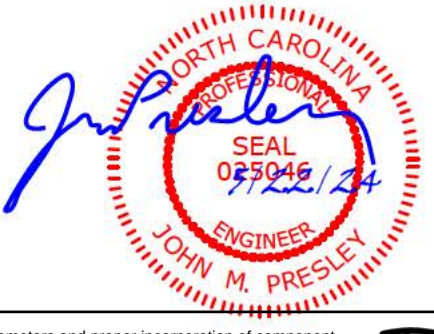

Job	Truss	Truss Type	Qty	Ply	PBS\SELMA GEORGIAN GR 2ND FLOOR
72416252	2F3	Truss	6	1	Job Reference (optional)

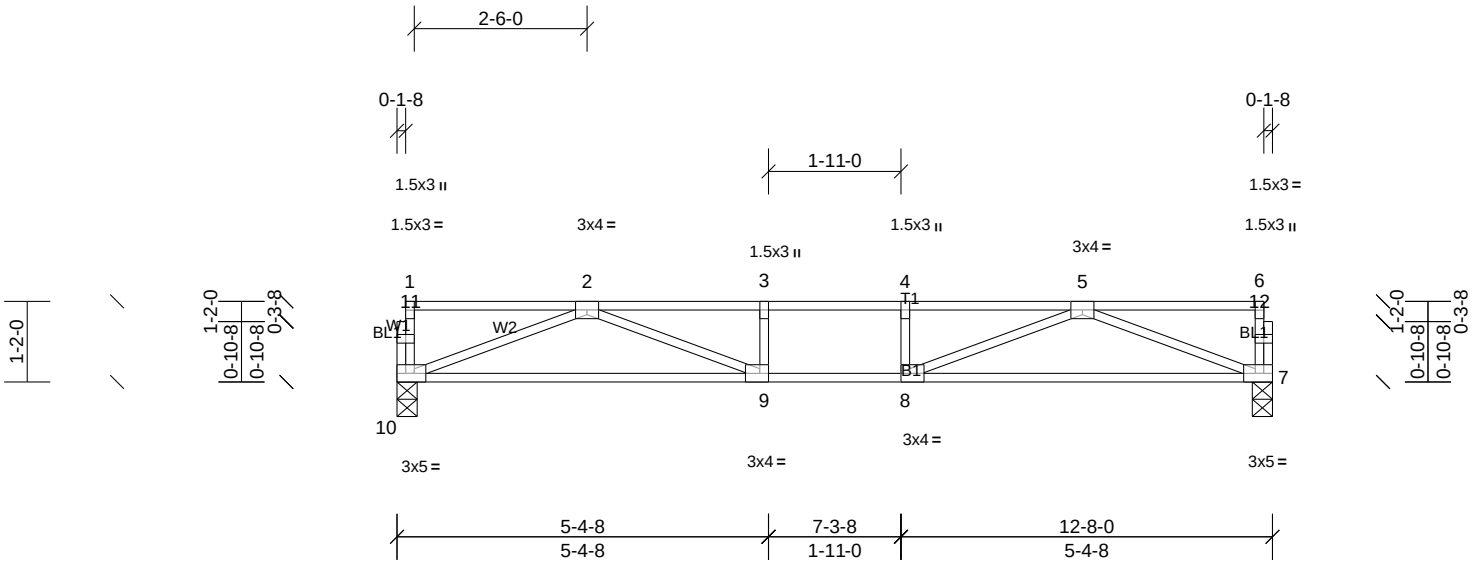

Scale = 1:33.5

Plate Offsets (X, Y): [7:0-2-0,Edge], [8:0-1-8,Edge], [9:0-1-8,Edge], [10:0-2-0,Edge]

Loading	(psf)	Spacing	2-0-0	CSI		DEFL	in	(loc)	l/defl	L/d	PLATES	GRIP
TCLL	40.0	Plate Grip DOL	1.00	TC	0.55	Vert(LL)	-0.18	9-10	>837	480	MT20	244/190
TCDL	10.0	Lumber DOL	1.00	BC	0.73	Vert(CT)	-0.26	9-10	>571	360		
BCLL	0.0	Rep Stress Incr	YES	WB	0.41	Horz(CT)	0.03	7	n/a	n/a		
BCDL	5.0	Code	IRC2015/TPI2014	Matrix-SH							Weight: 61 lb	FT = 20%F, 11%E

LUMBER

TOP CHORD	2x4 SP No.2(flat)
BOT CHORD	2x4 SP No.2(flat)
WEBS	2x4 SP No.3(flat)
OTHERS	2x4 SP No.3(flat)

BRACING

TOP CHORD	Structural wood sheathing directly applied or 6-0-0 oc purlins, except end verticals.
BOT CHORD	Rigid ceiling directly applied or 10-0-0 oc bracing.

REACTIONS (lb/size) 7=677/0-3-8, (min. 0-1-8), 10=677/0-3-8, (min. 0-1-8)

FORCES (lb) - Max. Comp./Max. Ten. - All forces 250 (lb) or less except when shown.

TOP CHORD	2-3=-2026/0, 3-4=-2026/0, 4-5=-2026/0
BOT CHORD	9-10=0/1396, 8-9=0/2026, 7-8=0/1396
WEBS	5-7=-1495/0, 2-10=-1495/0, 5-8=0/782, 2-9=0/782

NOTES

1) Unbalanced floor live loads have been considered for this design.
2) This truss is designed in accordance with the 2015 International Residential Code sections R502.11.1 and R802.10.2 and referenced standard ANSI/TPI 1.
3) Recommend 2x6 strongbacks, on edge, spaced at 10-00-00 oc and fastened to each truss with 3-10d (0.131" X 3") nails. Strongbacks to be attached to walls at their outer ends or restrained by other means.

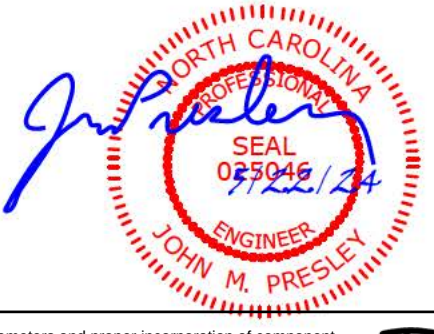

Job	Truss	Truss Type	Qty	Ply	PBS\SELMA GEORGIAN GR 2ND FLOOR
72416252	2F4	Truss	4	1	Job Reference (optional)

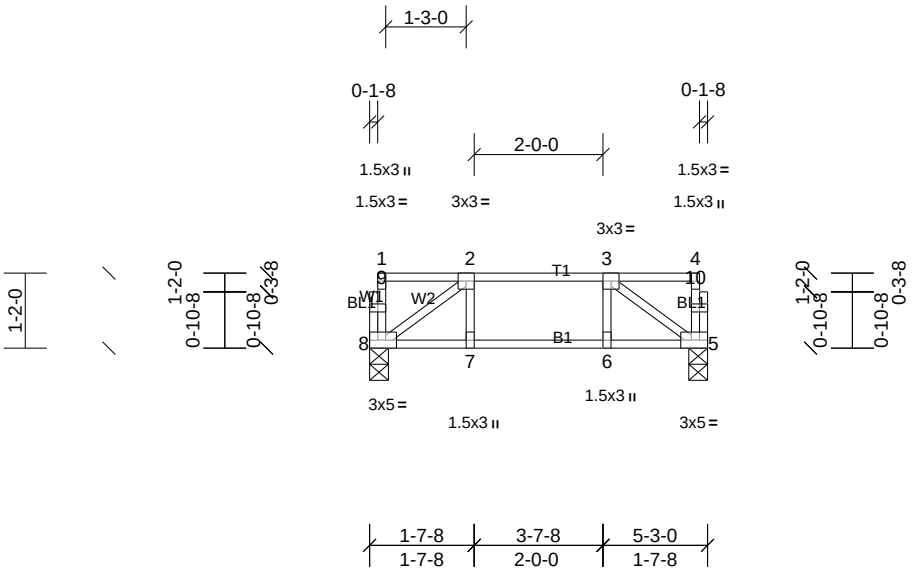

Scale = 1:35.9

Plate Offsets (X, Y): [5:0-2-0,Edge], [8:0-2-0,Edge]

Loading	(psf)	Spacing	2-0-0	CSI		DEFL	in	(loc)	l/defl	L/d	PLATES	GRIP
TCLL	40.0	Plate Grip DOL	1.00	TC	0.21	Vert(LL)	-0.01	7	>999	480	MT20	244/190
TCDL	10.0	Lumber DOL	1.00	BC	0.15	Vert(CT)	-0.01	7	>999	360		
BCLL	0.0	Rep Stress Incr	YES	WB	0.09	Horz(CT)	0.00	5	n/a	n/a		
BCDL	5.0	Code	IRC2015/TPI2014	Matrix-SH							Weight: 28 lb	FT = 20%F, 11%E

LUMBER

TOP CHORD	2x4 SP No.2(flat)
BOT CHORD	2x4 SP No.2(flat)
WEBS	2x4 SP No.3(flat)
OTHERS	2x4 SP No.3(flat)

BRACING

TOP CHORD	Structural wood sheathing directly applied or 5-3-0 oc purlins, except end verticals.
BOT CHORD	Rigid ceiling directly applied or 10-0-0 oc bracing.

REACTIONS (lb/size) 5=269/0-3-8, (min. 0-1-8), 8=269/0-3-8, (min. 0-1-8)

FORCES (lb) - Max. Comp./Max. Ten. - All forces 250 (lb) or less except when shown.

TOP CHORD	2-3=-302/0
BOT CHORD	7-8=0/302, 6-7=0/302, 5-6=0/302
WEBS	3-5=-370/0, 2-8=-370/0

NOTES

1) Unbalanced floor live loads have been considered for this design.
2) This truss is designed in accordance with the 2015 International Residential Code sections R502.11.1 and R802.10.2 and referenced standard ANSI/TPI 1.
3) Recommend 2x6 strongbacks, on edge, spaced at 10-00-00 oc and fastened to each truss with 3-10d (0.131" X 3") nails. Strongbacks to be attached to walls at their outer ends or restrained by other means.

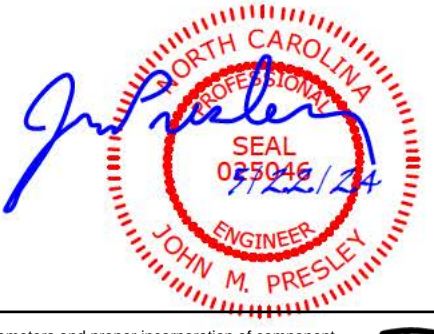

Job	Truss	Truss Type	Qty	Ply	PBS\SELMA GEORGIAN GR 2ND FLOOR
72416252	2F5	Truss	6	1	Job Reference (optional)

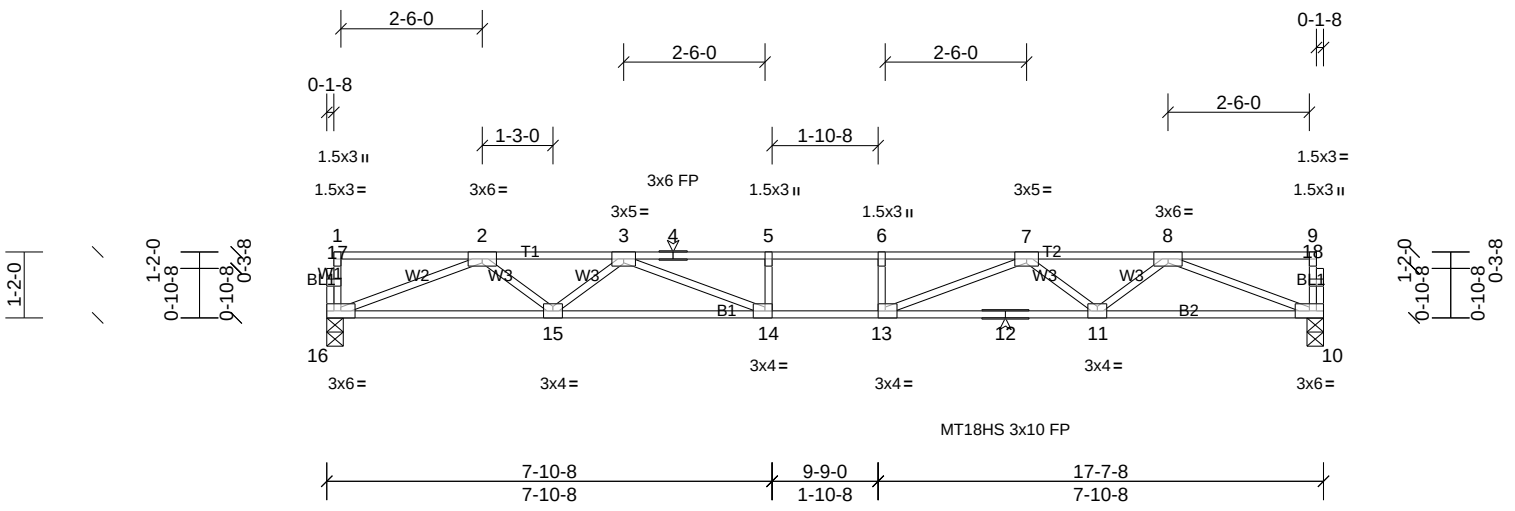

Scale = 1:40.9

Plate Offsets (X, Y): [13:0-1-8,Edge], [14:0-1-8,Edge]

Loading	(psf)	Spacing	2-0-0	CSI		DEFL	in	(loc)	l/defl	L/d	PLATES	GRIP
TCLL	40.0	Plate Grip DOL	1.00	TC	0.81	Vert(LL)	-0.32	14-15	>658	480	MT18HS	244/190
TCDL	10.0	Lumber DOL	1.00	BC	0.85	Vert(CT)	-0.43	14-15	>484	360	MT20	244/190
BCLL	0.0	Rep Stress Incr	YES	WB	0.61	Horz(CT)	0.07	10	n/a	n/a		
BCDL	5.0	Code	IRC2015/TPI2014	Matrix-SH							Weight: 85 lb	FT = 20%F, 11%E

LUMBER

TOP CHORD	2x4 SP No.2(flat)
BOT CHORD	2x4 SP No.1(flat)
WEBS	2x4 SP No.3(flat)
OTHERS	2x4 SP No.3(flat)

BRACING

TOP CHORD	Structural wood sheathing directly applied or 4-6-8 oc purlins, except end verticals.
BOT CHORD	Rigid ceiling directly applied or 10-0-0 oc bracing.

REACTIONS (lb/size) 10=949/0-3-8, (min. 0-1-8), 16=949/0-3-8, (min. 0-1-8)

FORCES (lb) - Max. Comp./Max. Ten. - All forces 250 (lb) or less except when shown.

TOP CHORD	2-3=-2744/0, 3-4=-3957/0, 4-5=-3957/0, 5-6=-3957/0, 6-7=-3957/0, 7-8=-2744/0
BOT CHORD	15-16=0/2087, 14-15=0/3348, 13-14=0/3957, 12-13=0/3348, 11-12=0/3348, 10-11=0/2087
WEBS	8-10=-2239/0, 2-16=-2239/0, 8-11=0/855, 2-15=0/855, 7-11=-787/0, 3-15=-787/0, 7-13=0/933, 3-14=0/933

NOTES

1) Unbalanced floor live loads have been considered for this design.
2) All plates are MT20 plates unless otherwise indicated.
3) This truss is designed in accordance with the 2015 International Residential Code sections R502.11.1 and R802.10.2 and referenced standard ANSI/TPI 1.
4) Recommend 2x6 strongbacks, on edge, spaced at 10-00-00 oc and fastened to each truss with 3-10d (0.131" X 3") nails. Strongbacks to be attached to walls at their outer ends or restrained by other means.

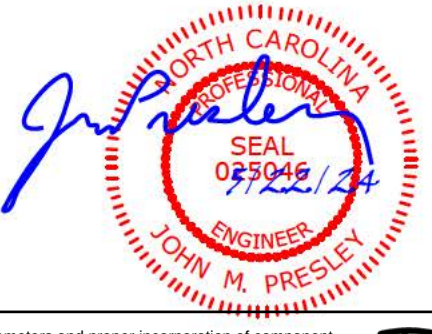

Job	Truss	Truss Type	Qty	Ply	PBS\SELMA GEORGIAN GR 2ND FLOOR
72416252	2F6	Truss	3	1	Job Reference (optional)

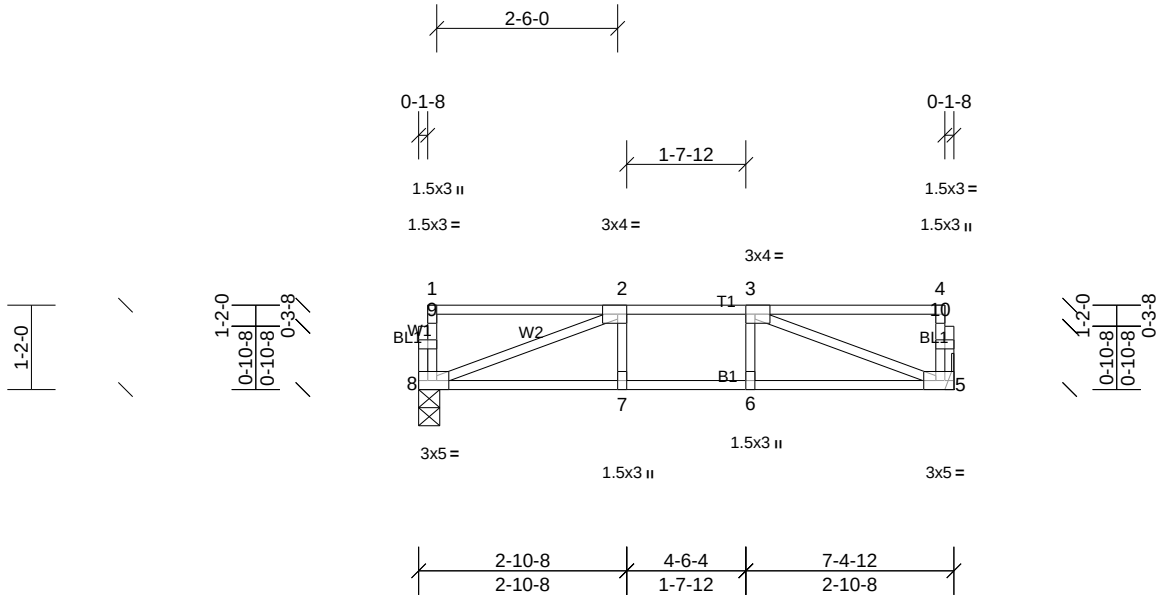

Scale = 1:32

Plate Offsets (X, Y): [2:0-1-8,Edge], [3:0-1-8,Edge], [5:0-2-0,Edge], [8:0-2-0,Edge]

Loading	(psf)	Spacing	2-0-0	CSI		DEFL	in	(loc)	l/defl	L/d	PLATES	GRIP
TCLL	40.0	Plate Grip DOL	1.00	TC	0.47	Vert(LL)	-0.05	7-8	>999	480	MT20	244/190
TCDL	10.0	Lumber DOL	1.00	BC	0.35	Vert(CT)	-0.06	7-8	>999	360		
BCLL	0.0	Rep Stress Incr	YES	WB	0.20	Horz(CT)	0.01	5	n/a	n/a		
BCDL	5.0	Code	IRC2015/TPI2014	Matrix-SH							Weight: 37 lb	FT = 20%F, 11%E

LUMBER

TOP CHORD	2x4 SP No.2(flat)
BOT CHORD	2x4 SP No.2(flat)
WEBS	2x4 SP No.3(flat)
OTHERS	2x4 SP No.3(flat)

BRACING

TOP CHORD	Structural wood sheathing directly applied or 6-0-0 oc purlins, except end verticals.
BOT CHORD	Rigid ceiling directly applied or 10-0-0 oc bracing.

REACTIONS (lb/size) 5=387/ Mechanical, (min. 0-1-8), 8=387/0-3-8, (min. 0-1-8)

FORCES (lb) - Max. Comp./Max. Ten. - All forces 250 (lb) or less except when shown.

TOP CHORD	2-3=-684/0
BOT CHORD	7-8=0/684, 6-7=0/684, 5-6=0/684
WEBS	3-5=-727/0, 2-8=-727/0

NOTES

1) Unbalanced floor live loads have been considered for this design.
2) This truss is designed in accordance with the 2015 International Residential Code sections R502.11.1 and R802.10.2 and referenced standard ANSI/TPI 1.
3) Recommend 2x6 strongbacks, on edge, spaced at 10-00-00 oc and fastened to each truss with 3-10d (0.131" X 3") nails. Strongbacks to be attached to walls at their outer ends or restrained by other means.

NORTH CAROLINA PROFESSIONAL SEAL 025046 ENGINEER JOHN M. PRESLEY
5/22/24

Job	Truss	Truss Type	Qty	Ply	PBS\SELMA GEORGIAN GR 2ND FLOOR
72416252	2F7	Truss	1	1	Job Reference (optional)

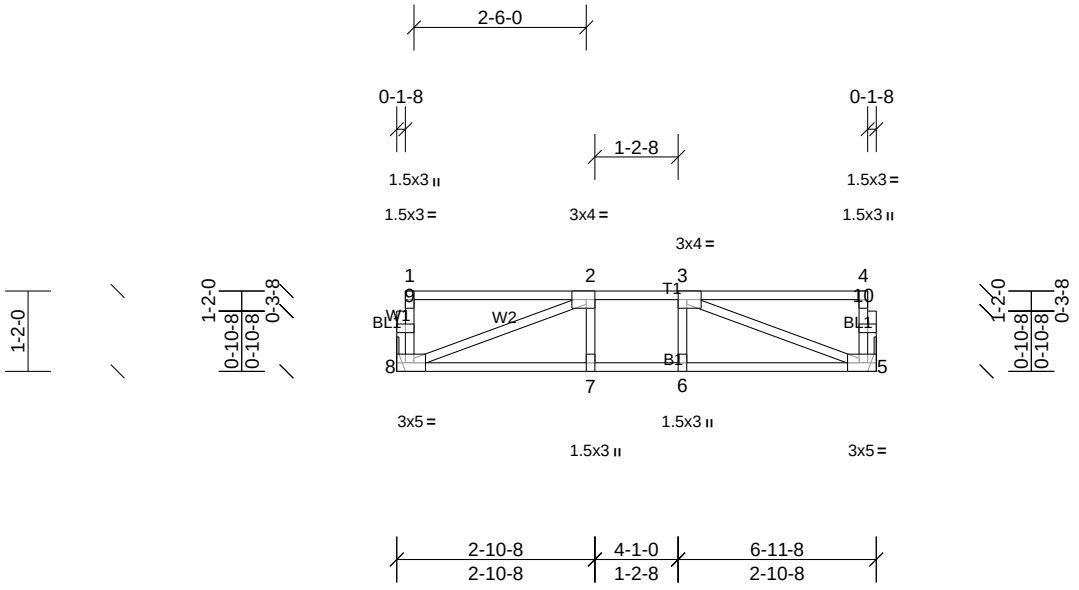

Scale = 1:33.6

Plate Offsets (X, Y): [2:0-1-8,Edge], [3:0-1-8,Edge], [5:0-2-0,Edge], [8:0-2-0,Edge]

Loading	(psf)	Spacing	2-0-0	CSI		DEFL	in	(loc)	l/defl	L/d	PLATES	GRIP
TCLL	40.0	Plate Grip DOL	1.00	TC	0.46	Vert(LL)	-0.04	7-8	>999	480	MT20	244/190
TCDL	10.0	Lumber DOL	1.00	BC	0.31	Vert(CT)	-0.05	7-8	>999	360		
BCLL	0.0	Rep Stress Incr	YES	WB	0.18	Horz(CT)	0.01	5	n/a	n/a		
BCDL	5.0	Code	IRC2015/TPI2014	Matrix-SH							Weight: 36 lb	FT = 20%F, 11%E

LUMBER

TOP CHORD	2x4 SP No.2(flat)
BOT CHORD	2x4 SP No.2(flat)
WEBS	2x4 SP No.3(flat)
OTHERS	2x4 SP No.3(flat)

BRACING

TOP CHORD	Structural wood sheathing directly applied or 6-0-0 oc purlins, except end verticals.
BOT CHORD	Rigid ceiling directly applied or 10-0-0 oc bracing.

REACTIONS (lb/size) 5=363/ Mechanical, (min. 0-1-8), 8=363/ Mechanical, (min. 0-1-8)

FORCES (lb) - Max. Comp./Max. Ten. - All forces 250 (lb) or less except when shown.

TOP CHORD	2-3=-622/0
BOT CHORD	7-8=0/622, 6-7=0/622, 5-6=0/622
WEBS	3-5=-660/0, 2-8=-660/0

NOTES

1) Unbalanced floor live loads have been considered for this design.
2) This truss is designed in accordance with the 2015 International Residential Code sections R502.11.1 and R802.10.2 and referenced standard ANSI/TPI 1.
3) Recommend 2x6 strongbacks, on edge, spaced at 10-00-00 oc and fastened to each truss with 3-10d (0.131" X 3") nails. Strongbacks to be attached to walls at their outer ends or restrained by other means.

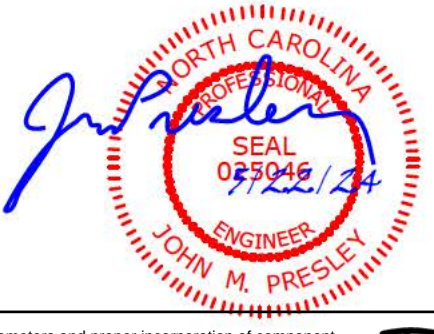

Job	Truss	Truss Type	Qty	Ply	PBS\SELMA GEORGIAN GR 2ND FLOOR
72416252	2F8	Truss	3	1	Job Reference (optional)

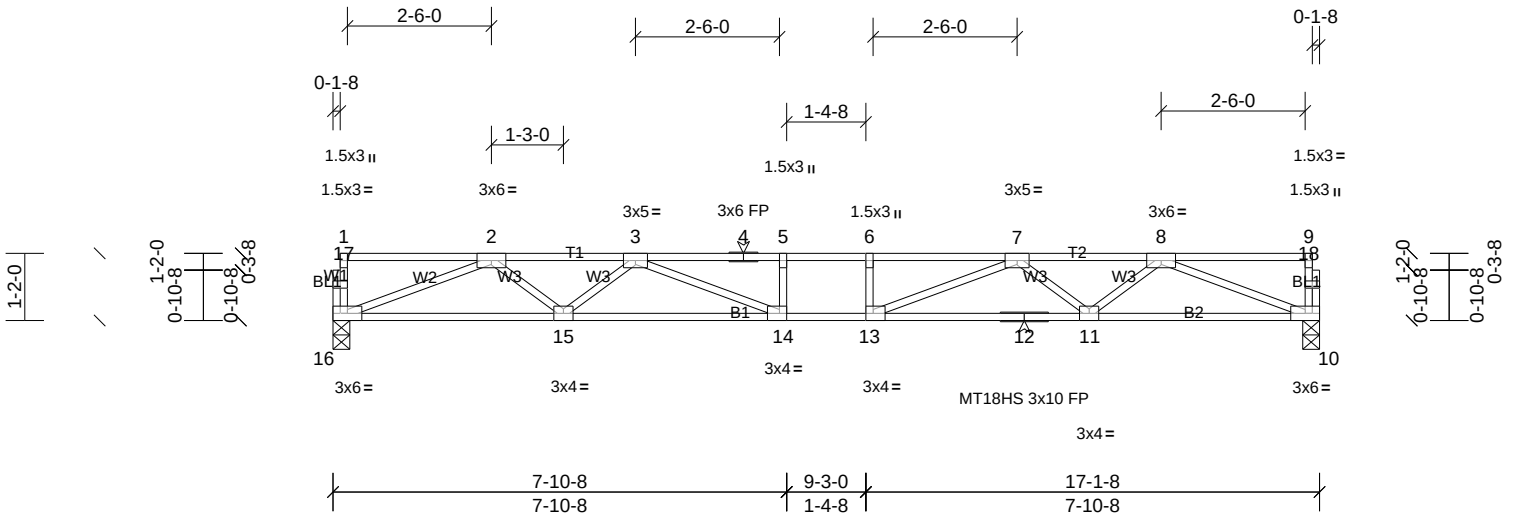

Scale = 1:40.2

Plate Offsets (X, Y): [13:0-1-8,Edge], [14:0-1-8,Edge]

Loading	(psf)	Spacing	2-0-0	CSI		DEFL	in	(loc)	l/defl	L/d	PLATES	GRIP
TCLL	40.0	Plate Grip DOL	1.00	TC	0.72	Vert(LL)	-0.28	13-14	>731	480	MT18HS	244/190
TCDL	10.0	Lumber DOL	1.00	BC	0.74	Vert(CT)	-0.38	13-14	>534	360	MT20	244/190
BCLL	0.0	Rep Stress Incr	YES	WB	0.59	Horz(CT)	0.06	10	n/a	n/a		
BCDL	5.0	Code	IRC2015/TPI2014	Matrix-SH							Weight: 83 lb	FT = 20%F, 11%E

LUMBER

TOP CHORD	2x4 SP No.2(flat)
BOT CHORD	2x4 SP No.1(flat)
WEBS	2x4 SP No.3(flat)
OTHERS	2x4 SP No.3(flat)

BRACING

TOP CHORD	Structural wood sheathing directly applied or 5-4-8 oc purlins, except end verticals.
BOT CHORD	Rigid ceiling directly applied or 10-0-0 oc bracing.

REACTIONS (lb/size) 10=922/0-3-8, (min. 0-1-8), 16=922/0-3-8, (min. 0-1-8)

FORCES (lb) - Max. Comp./Max. Ten. - All forces 250 (lb) or less except when shown.

TOP CHORD	2-3=-2642/0, 3-4=-3750/0, 4-5=-3750/0, 5-6=-3750/0, 6-7=-3750/0, 7-8=-2642/0
BOT CHORD	15-16=0/2018, 14-15=0/3215, 13-14=0/3750, 12-13=0/3215, 11-12=0/3215, 10-11=0/2018
WEBS	8-10=-2164/0, 2-16=-2164/0, 8-11=0/813, 2-15=0/813, 7-11=-745/0, 3-15=-745/0, 7-13=0/828, 3-14=0/828

NOTES

1) Unbalanced floor live loads have been considered for this design.
2) All plates are MT20 plates unless otherwise indicated.
3) This truss is designed in accordance with the 2015 International Residential Code sections R502.11.1 and R802.10.2 and referenced standard ANSI/TPI 1.
4) Recommend 2x6 strongbacks, on edge, spaced at 10-00-00 oc and fastened to each truss with 3-10d (0.131" X 3") nails. Strongbacks to be attached to walls at their outer ends or restrained by other means.

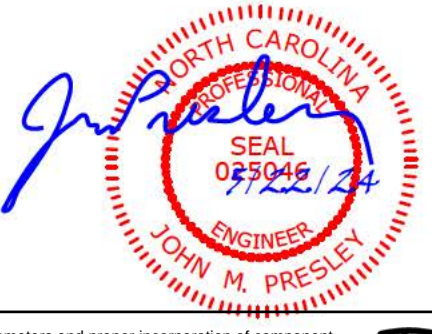

Job	Truss	Truss Type	Qty	Ply	PBS\SELMA GEORGIAN GR 2ND FLOOR
72416252	2F9	Truss	6	1	Job Reference (optional)

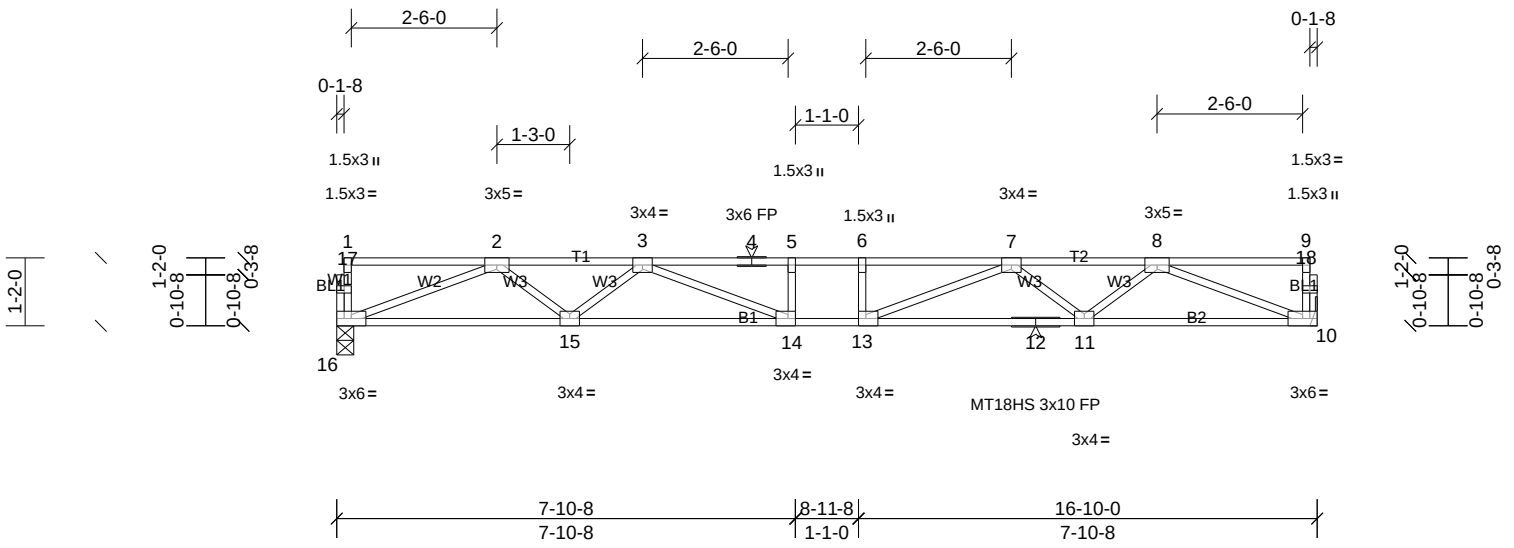

Scale = 1:39.7

Plate Offsets (X, Y): [13:0-1-8,Edge], [14:0-1-8,Edge]

Loading	(psf)	Spacing	2-0-0	CSI		DEFL	in	(loc)	l/defl	L/d	PLATES	GRIP
TCLL	40.0	Plate Grip DOL	1.00	TC	0.67	Vert(LL)	-0.27	13-14	>726	480	MT18HS	244/190
TCDL	10.0	Lumber DOL	1.00	BC	0.96	Vert(CT)	-0.38	13-14	>531	360	MT20	244/190
BCLL	0.0	Rep Stress Incr	YES	WB	0.58	Horz(CT)	0.07	10	n/a	n/a		
BCDL	5.0	Code	IRC2015/TPI2014	Matrix-SH							Weight: 82 lb	FT = 20%F, 11%E

LUMBER

TOP CHORD	2x4 SP No.2(flat)
BOT CHORD	2x4 SP No.2(flat)
WEBS	2x4 SP No.3(flat)
OTHERS	2x4 SP No.3(flat)

BRACING

TOP CHORD	Structural wood sheathing directly applied or 5-6-0 oc purlins, except end verticals.
BOT CHORD	Rigid ceiling directly applied or 2-2-0 oc bracing.

REACTIONS (lb/size) 10=906/ Mechanical, (min. 0-1-8), 16=906/0-3-8, (min. 0-1-8)

FORCES (lb) - Max. Comp./Max. Ten. - All forces 250 (lb) or less except when shown.

TOP CHORD	2-3=-2583/0, 3-4=-3632/0, 4-5=-3632/0, 5-6=-3632/0, 6-7=-3632/0, 7-8=-2583/0
BOT CHORD	15-16=0/1978, 14-15=0/3136, 13-14=0/3632, 12-13=0/3136, 11-12=0/3136, 10-11=0/1978
WEBS	8-10=-2121/0, 2-16=-2121/0, 8-11=0/788, 2-15=0/788, 7-11=-720/0, 3-15=-720/0, 7-13=0/771, 3-14=0/771

NOTES

1) Unbalanced floor live loads have been considered for this design.
2) All plates are MT20 plates unless otherwise indicated.
3) This truss is designed in accordance with the 2015 International Residential Code sections R502.11.1 and R802.10.2 and referenced standard ANSI/TPI 1.
4) Recommend 2x6 strongbacks, on edge, spaced at 10-00-00 oc and fastened to each truss with 3-10d (0.131" X 3") nails. Strongbacks to be attached to walls at their outer ends or restrained by other means.

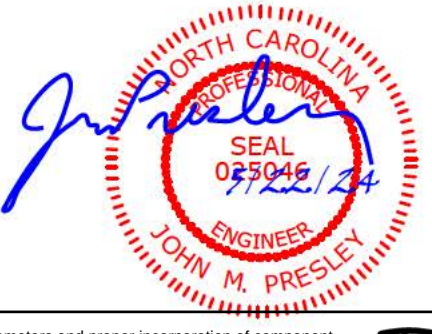

Job	Truss	Truss Type	Qty	Ply	PBS\SELMA GEORGIAN GR 2ND FLOOR
72416252	2F10	Truss	8	1	Job Reference (optional)

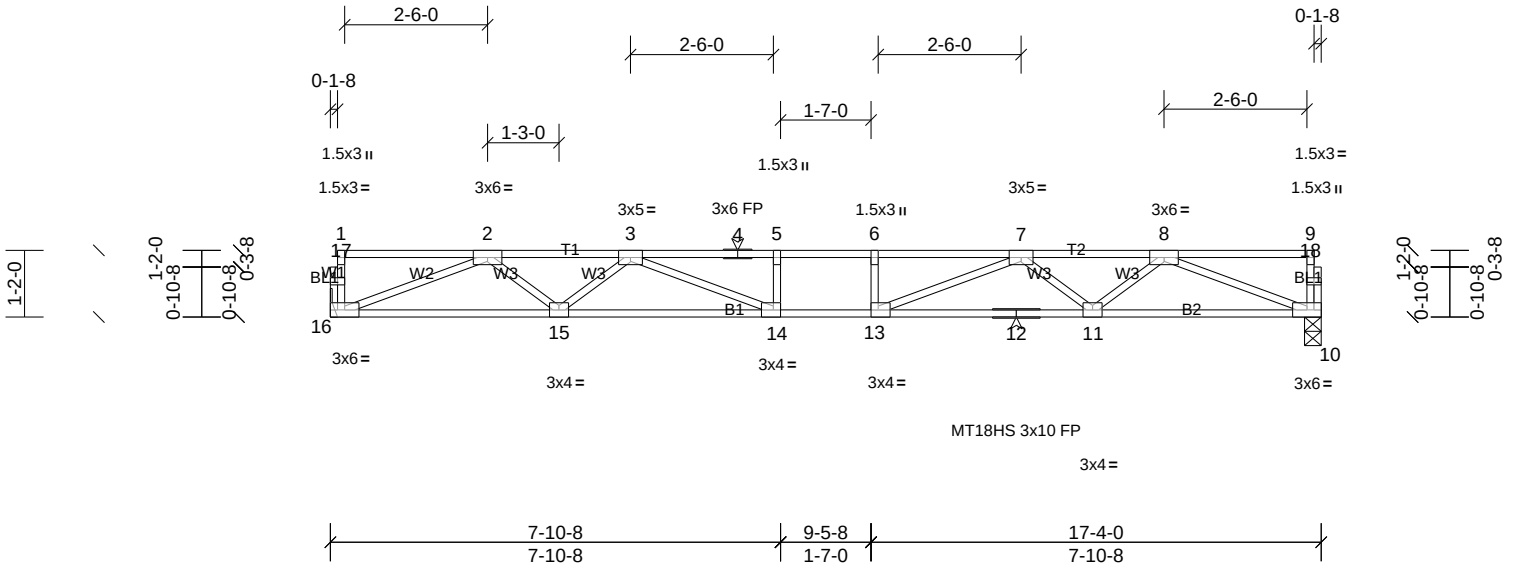

Scale = 1:40.5

Plate Offsets (X, Y): [13:0-1-8,Edge], [14:0-1-8,Edge]

Loading	(psf)	Spacing	2-0-0	CSI		DEFL	in	(loc)	l/defl	L/d	PLATES	GRIP
TCLL	40.0	Plate Grip DOL	1.00	TC	0.76	Vert(LL)	-0.29	13-14	>707	480	MT18HS	244/190
TCDL	10.0	Lumber DOL	1.00	BC	0.79	Vert(CT)	-0.40	13-14	>516	360	MT20	244/190
BCLL	0.0	Rep Stress Incr	YES	WB	0.60	Horz(CT)	0.07	10	n/a	n/a		
BCDL	5.0	Code	IRC2015/TPI2014	Matrix-SH							Weight: 84 lb	FT = 20%F, 11%E

LUMBER

TOP CHORD	2x4 SP No.2(flat)
BOT CHORD	2x4 SP No.1(flat)
WEBS	2x4 SP No.3(flat)
OTHERS	2x4 SP No.3(flat)

BRACING

TOP CHORD	Structural wood sheathing directly applied or 5-3-0 oc purlins, except end verticals.
BOT CHORD	Rigid ceiling directly applied or 10-0-0 oc bracing.

REACTIONS (lb/size) 10=933/0-3-8, (min. 0-1-8), 16=933/ Mechanical, (min. 0-1-8)

FORCES (lb) - Max. Comp./Max. Ten. - All forces 250 (lb) or less except when shown.

TOP CHORD	2-3=-2685/0, 3-4=-3836/0, 4-5=-3836/0, 5-6=-3836/0, 6-7=-3836/0, 7-8=-2685/0
BOT CHORD	15-16=0/2047, 14-15=0/3270, 13-14=0/3836, 12-13=0/3270, 11-12=0/3270, 10-11=0/2047
WEBS	8-10=-2195/0, 2-16=-2195/0, 8-11=0/830, 2-15=0/830, 7-11=-762/0, 3-15=-762/0, 7-13=0/871, 3-14=0/871

NOTES

1) Unbalanced floor live loads have been considered for this design.
2) All plates are MT20 plates unless otherwise indicated.
3) This truss is designed in accordance with the 2015 International Residential Code sections R502.11.1 and R802.10.2 and referenced standard ANSI/TPI 1.
4) Recommend 2x6 strongbacks, on edge, spaced at 10-00-00 oc and fastened to each truss with 3-10d (0.131" X 3") nails. Strongbacks to be attached to walls at their outer ends or restrained by other means.

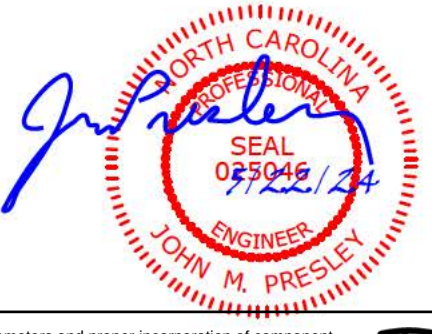

Job	Truss	Truss Type	Qty	Ply	PBS\SELMA GEORGIAN GR 2ND FLOOR
72416252	2FG1	Truss	1	1	Job Reference (optional)

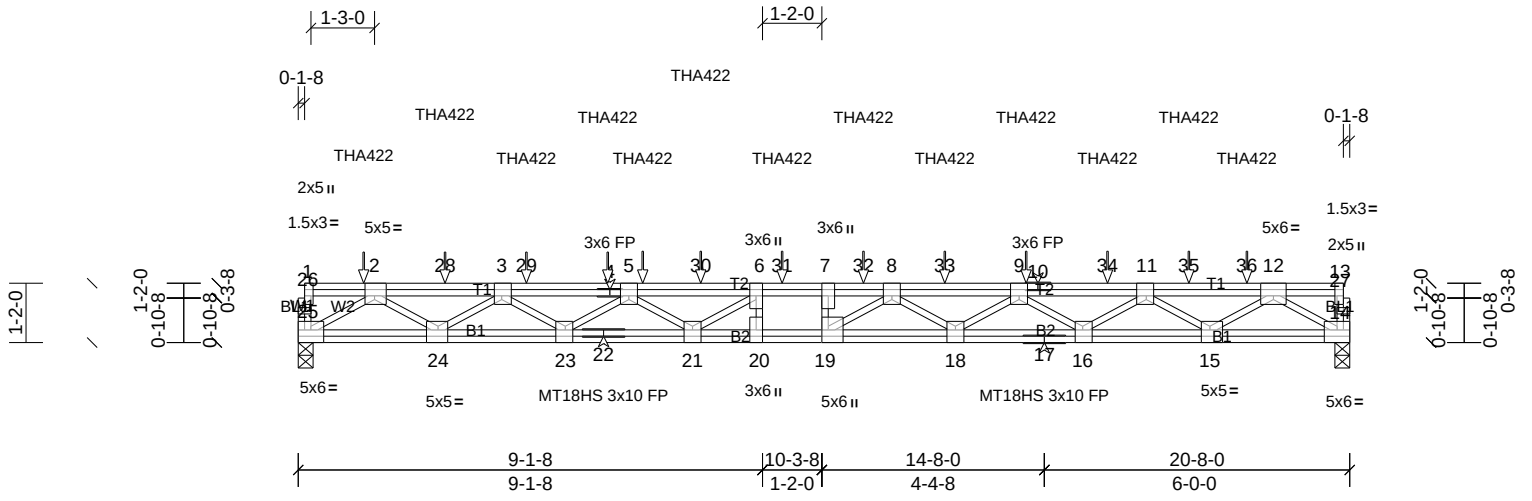

Scale = 1:45.5

Plate Offsets (X, Y): [2:0-2-4,Edge], [3:0-1-12,Edge], [5:0-2-0,Edge], [7:0-3-0,Edge], [8:0-2-0,Edge], [9:0-2-0,Edge], [11:0-1-12,Edge], [12:0-3-0,Edge], [13:Edge,0-1-8], [14:Edge,0-3-0], [15:0-2-0,Edge], [16:0-1-12,Edge], [18:0-2-0,Edge], [19:0-3-0,Edge], [21:0-2-0,Edge], [23:0-1-12,Edge], [24:0-2-4,Edge], [25:0-3-0,Edge]

Loading	(psf)	Spacing	2-0-0	CSI		DEFL	in	(loc)	l/defl	L/d	PLATES	GRIP
TCLL	40.0	Plate Grip DOL	1.00	TC	0.22	Vert(LL)	-0.29	18-19	>837	480	MT20	244/190
TCDL	10.0	Lumber DOL	1.00	BC	0.49	Vert(CT)	-0.41	19	>591	360	MT18HS	244/190
BCLL	0.0	Rep Stress Incr	NO	WB	0.67	Horz(CT)	0.04	14	n/a	n/a		
BCDL	5.0	Code	IRC2015/TPI2014	Matrix-SH							Weight: 160 lb	FT = 20%F, 11%E

LUMBER

TOP CHORD	2x4 SP SS(flat)
BOT CHORD	2x4 SP SS(flat)
WEBS	2x4 SP No.3(flat)
OTHERS	2x4 SP No.3(flat)

BRACING

TOP CHORD	Structural wood sheathing directly applied or 6-0-0 oc purlins, except end verticals.
BOT CHORD	Rigid ceiling directly applied or 10-0-0 oc bracing.

REACTIONS (lb/size) 14=1147/0-3-8, (min. 0-1-8), 25=1147/0-3-8, (min. 0-1-8)
Max Grav 14=1256 (LC 4), 25=1217 (LC 3)

FORCES (lb) - Max. Comp./Max. Ten. - All forces 250 (lb) or less except when shown.

TOP CHORD 2-28=-2833/0, 3-28=-2833/0, 3-29=-4666/0, 4-29=-4666/0, 4-5=-4666/0, 5-30=-5829/0, 6-30=-5829/0, 6-31=-6236/0, 7-31=-6236/0, 7-32=-6236/0, 8-32=-6236/0, 8-33=-5870/0, 9-33=-5870/0, 9-10=-4906/0, 10-34=-4906/0, 11-34=-4906/0, 11-35=-2969/0, 35-36=-2969/0, 12-36=-2969/0

BOT CHORD 24-25=0/1774, 23-24=0/3976, 22-23=0/5425, 21-22=0/5425, 20-21=0/6236, 19-20=0/6236, 18-19=0/6192, 17-18=0/5617, 16-17=0/5617, 15-16=0/4184, 14-15=0/1844

WEBS 12-14=-2150/0, 2-25=-2069/0, 12-15=0/1399, 2-24=0/1330, 11-15=-1506/0, 3-24=-1425/0, 11-16=0/975, 3-23=0/979, 9-16=-941/0, 5-23=-941/0, 9-18=0/644, 5-21=0/847, 8-18=-671/0, 6-21=-1009/104, 8-19=-493/749

NOTES

1) Unbalanced floor live loads have been considered for this design.
2) All plates are MT20 plates unless otherwise indicated.
3) All plates are 5x4 MT20 unless otherwise indicated.
4) This truss is designed in accordance with the 2015 International Residential Code sections R502.11.1 and R802.10.2 and referenced standard ANSI/TPI 1.
5) Recommend 2x6 strongbacks, on edge, spaced at 10-00-00 oc and fastened to each truss with 3-10d (0.131" X 3") nails. Strongbacks to be attached to walls at their outer ends or restrained by other means.
6) Use Simpson Strong-Tie THA422 (6-16d Girder, 6-10d Truss) or equivalent spaced at 1-7-3 oc max. starting at 1-3-7 from the left end to 18-7-12 to connect truss(es) to front face of top chord.
7) Fill all nail holes where hanger is in contact with lumber.

LOAD CASE(S) Standard

1) Dead + Floor Live (balanced): Lumber Increase=1.00, Plate Increase=1.00
Uniform Loads (lb/ft)
Vert: 14-25=-10, 1-13=-100
Concentrated Loads (lb)
Vert: 4=-4, 2=-4, 9=-5, 5=-5, 28=-4, 29=-4, 30=-5, 31=-5, 32=-5, 33=-5, 34=-5, 35=-5, 36=-5

NORTH CAROLINA PROFESSIONAL SEAL 025046 ENGINEER JOHN M. PRESLEY
5/22/24

Job	Truss	Truss Type	Qty	Ply	PBS\SELMA GEORGIAN GR 2ND FLOOR
72416252	2FG2	Truss	1	1	Job Reference (optional)

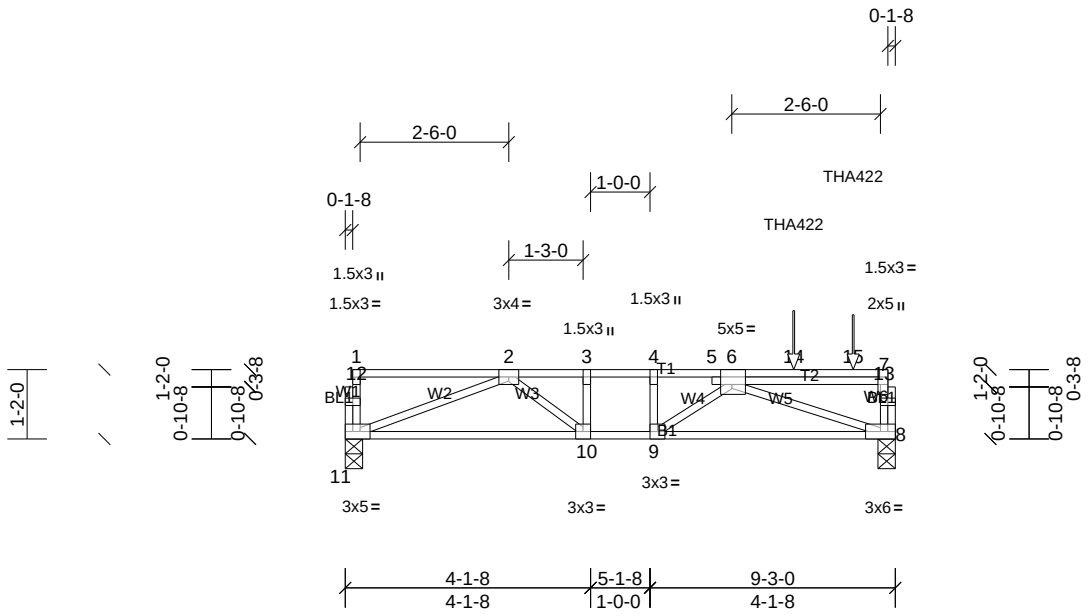

Scale = 1:38.9

Plate Offsets (X, Y): [6:0-2-4,Edge], [7:Edge,0-1-8], [11:0-2-0,Edge]

Loading	(psf)	Spacing	2-0-0	CSI		DEFL	in	(loc)	l/defl	L/d	PLATES	GRIP
TCLL	40.0	Plate Grip DOL	1.00	TC	0.93	Vert(LL)	-0.08	8-9	>999	480	MT20	244/190
TCDL	10.0	Lumber DOL	1.00	BC	0.83	Vert(CT)	-0.12	8-9	>878	360		
BCLL	0.0	Rep Stress Incr	NO	WB	0.59	Horz(CT)	0.03	8	n/a	n/a		
BCDL	5.0	Code	IRC2015/TPI2014	Matrix-SH							Weight: 51 lb	FT = 20%F, 11%E

LUMBER

TOP CHORD	2x4 SP No.1(flat)
BOT CHORD	2x4 SP No.2(flat)
WEBS	2x4 SP No.3(flat)
OTHERS	2x4 SP No.3(flat)

BRACING

TOP CHORD	Structural wood sheathing directly applied or 6-0-0 oc purlins, except end verticals.
BOT CHORD	Rigid ceiling directly applied or 10-0-0 oc bracing.

REACTIONS (lb/size) 8=1370/0-3-8, (min. 0-1-8), 11=638/0-3-8, (min. 0-1-8)
Max Grav 8=1424 (LC 4), 11=638 (LC 1)

FORCES (lb) - Max. Comp./Max. Ten. - All forces 250 (lb) or less except when shown.

TOP CHORD	8-13=-656/0, 7-13=-655/0, 2-3=-1681/0, 3-4=-1681/0, 4-5=-1681/0, 5-6=-1716/0
BOT CHORD	10-11=0/1299, 9-10=0/1681, 8-9=0/2063
WEBS	6-8=-2162/0, 2-11=-1391/0, 6-9=-716/119, 2-10=0/657, 3-10=-327/0, 4-9=-32/400

NOTES

1) Unbalanced floor live loads have been considered for this design.
2) This truss is designed in accordance with the 2015 International Residential Code sections R502.11.1 and R802.10.2 and referenced standard ANSI/TPI 1.
3) Recommend 2x6 strongbacks, on edge, spaced at 10-00-00 oc and fastened to each truss with 3-10d (0.131" X 3") nails. Strongbacks to be attached to walls at their outer ends or restrained by other means.
4) Use Simpson Strong-Tie THA422 (6-16d Girder, 6-10d Truss) or equivalent spaced at 1-0-0 oc max. starting at 7-6-8 from the left end to 8-6-8 to connect truss(es) to back face of top chord.
5) Fill all nail holes where hanger is in contact with lumber.

LOAD CASE(S) Standard

1) Dead + Floor Live (balanced): Lumber Increase=1.00, Plate Increase=1.00
Uniform Loads (lb/ft)
Vert: 8-11=-10, 1-7=-100
Concentrated Loads (lb)
Vert: 14=-744, 15=-287

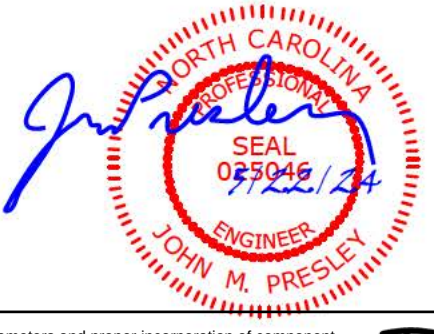

Job	Truss	Truss Type	Qty	Ply	PBS\SELMA GEORGIAN GR 2ND FLOOR
72416252	2FG3	Truss	1	1	Job Reference (optional)

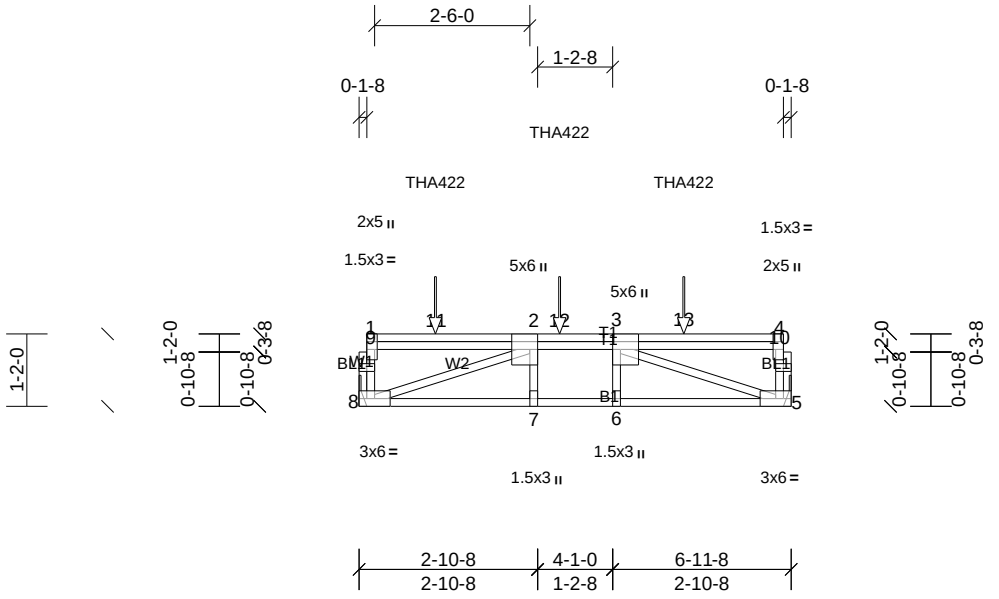

Scale = 1:37.3

Plate Offsets (X, Y): [2:0-3-0,Edge], [3:0-3-0,Edge], [4:Edge,0-1-8]

Loading	(psf)	Spacing	2-0-0	CSI		DEFL	in	(loc)	l/defl	L/d	PLATES	GRIP
TCLL	40.0	Plate Grip DOL	1.00	TC	0.74	Vert(LL)	-0.05	7-8	>999	480	MT20	244/190
TCDL	10.0	Lumber DOL	1.00	BC	0.61	Vert(CT)	-0.07	7-8	>999	360		
BCLL	0.0	Rep Stress Incr	NO	WB	0.43	Horz(CT)	0.02	5	n/a	n/a		
BCDL	5.0	Code	IRC2015/TPI2014	Matrix-SH							Weight: 45 lb	FT = 20%F, 11%E

LUMBER

TOP CHORD	2x4 SP No.2(flat)
BOT CHORD	2x4 SP No.2(flat)
WEBS	2x4 SP No.3(flat)
OTHERS	2x4 SP No.3(flat)

BRACING

TOP CHORD	Structural wood sheathing directly applied or 6-0-0 oc purlins, except end verticals.
BOT CHORD	Rigid ceiling directly applied or 10-0-0 oc bracing.

REACTIONS (lb/size) 5=761/ Mechanical, (min. 0-1-8), 8=825/ Mechanical, (min. 0-1-8)
Max Grav 5=783 (LC 4), 8=844 (LC 3)

FORCES (lb) - Max. Comp./Max. Ten. - All forces 250 (lb) or less except when shown.

TOP CHORD	8-9=-348/0, 1-9=-347/0, 5-10=-260/0, 4-10=-260/0, 2-12=-1501/0, 3-12=-1501/0
BOT CHORD	7-8=0/1501, 6-7=0/1501, 5-6=0/1501
WEBS	3-5=-1584/0, 2-8=-1579/0

NOTES

1) Unbalanced floor live loads have been considered for this design.
2) This truss is designed in accordance with the 2015 International Residential Code sections R502.11.1 and R802.10.2 and referenced standard ANSI/TPI 1.
3) Recommend 2x6 strongbacks, on edge, spaced at 10-00-00 oc and fastened to each truss with 3-10d (0.131" X 3") nails. Strongbacks to be attached to walls at their outer ends or restrained by other means.
4) Use Simpson Strong-Tie THA422 (6-16d Girder, 6-10d Truss) or equivalent spaced at 2-0-0 oc max. starting at 1-2-12 from the left end to 5-2-12 to connect truss(es) to back face of top chord.
5) Fill all nail holes where hanger is in contact with lumber.

LOAD CASE(S) Standard

1) Dead + Floor Live (balanced): Lumber Increase=1.00, Plate Increase=1.00
   Uniform Loads (lb/ft)
   Vert: 5-8=-10, 1-4=-100
   Concentrated Loads (lb)
   Vert: 11=-287, 12=-287, 13=-287

NORTH CAROLINA PROFESSIONAL SEAL 025046 ENGINEER JOHN M. PRESLEY
5/22/24

Job	Truss	Truss Type	Qty	Ply	PBS\SELMA GEORGIAN GR 2ND FLOOR
72416252	2KW1	Truss	1	1	Job Reference (optional)

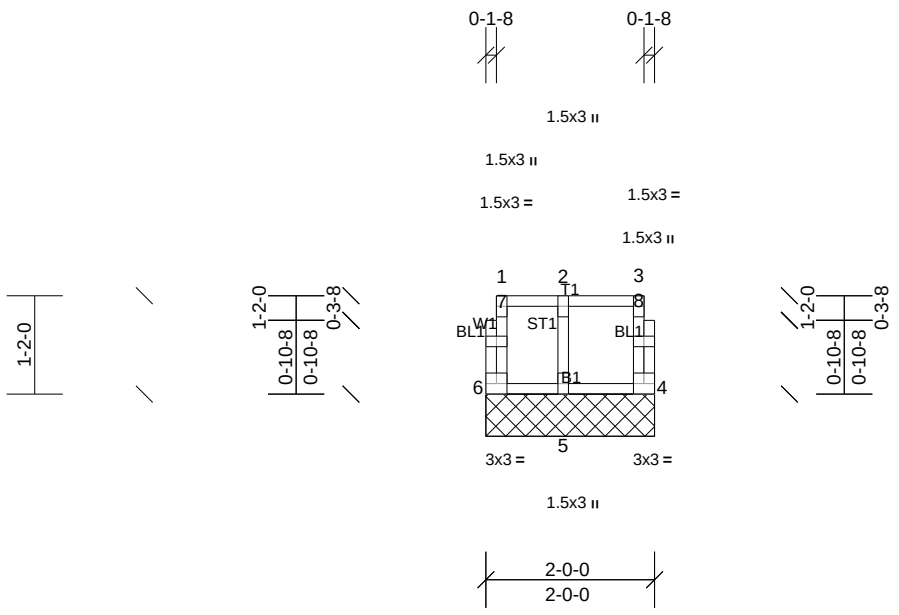

Scale = 1:27.4

Loading	(psf)	Spacing	2-0-0	CSI		DEFL	in	(loc)	l/defl	L/d	PLATES	GRIP
TCLL	40.0	Plate Grip DOL	1.00	TC	0.04	Vert(LL)	n/a	-	n/a	999	MT20	244/190
TCDL	10.0	Lumber DOL	1.00	BC	0.01	Vert(TL)	n/a	-	n/a	999		
BCLL	0.0	Rep Stress Incr	NO	WB	0.02	Horiz(TL)	n/a	-	n/a	n/a		
BCDL	5.0	Code	IRC2015/TPI2014	Matrix-R							Weight: 12 lb	FT = 20%F, 11%E

LUMBER

TOP CHORD	2x4 SP No.2(flat)
BOT CHORD	2x4 SP No.2(flat)
WEBS	2x4 SP No.3(flat)
OTHERS	2x4 SP No.3(flat)

BRACING

TOP CHORD	Structural wood sheathing directly applied or 2-0-0 oc purlins, except end verticals.
BOT CHORD	Rigid ceiling directly applied or 10-0-0 oc bracing.

REACTIONS (lb/size) 4=46/2-0-0, (min. 0-1-8), 5=96/2-0-0, (min. 0-1-8), 6=37/2-0-0, (min. 0-1-8)

FORCES (lb) - Max. Comp./Max. Ten. - All forces 250 (lb) or less except when shown.

NOTES

1) Gable requires continuous bottom chord bearing.
2) Gable studs spaced at 2-0-0 oc.
3) This truss is designed in accordance with the 2015 International Residential Code sections R502.11.1 and R802.10.2 and referenced standard ANSI/TPI 1.
4) Recommend 2x6 strongbacks, on edge, spaced at 10-00-00 oc and fastened to each truss with 3-10d (0.131" X 3") nails. Strongbacks to be attached to walls at their outer ends or restrained by other means.

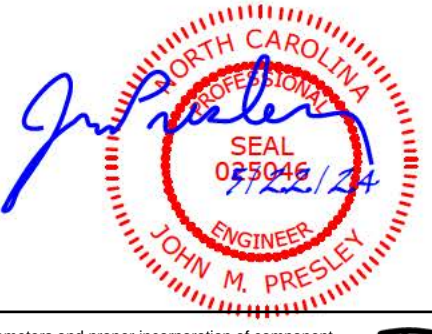

Job	Truss	Truss Type	Qty	Ply	PBS\SELMA GEORGIAN GR 2ND FLOOR
72416252	2KW2	Truss	1	1	Job Reference (optional)

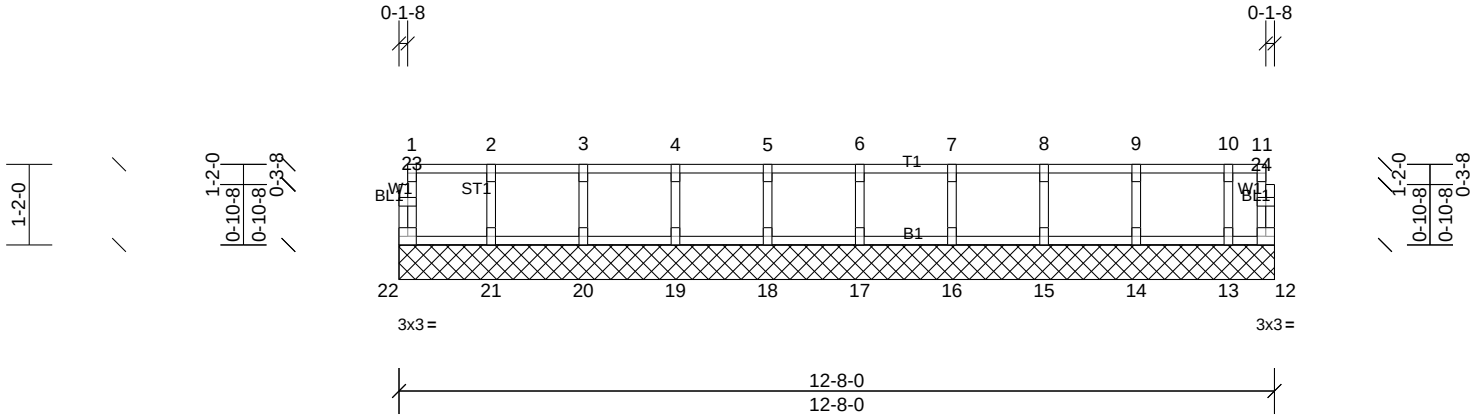

Scale = 1:33.5

Loading	(psf)	Spacing	2-0-0	CSI		DEFL	in	(loc)	l/defl	L/d	PLATES	GRIP
TCLL	40.0	Plate Grip DOL	1.00	TC	0.08	Vert(LL)	n/a	-	n/a	999	MT20	244/190
TCDL	10.0	Lumber DOL	1.00	BC	0.02	Vert(TL)	n/a	-	n/a	999		
BCLL	0.0	Rep Stress Incr	YES	WB	0.03	Horiz(TL)	n/a	-	n/a	n/a		
BCDL	5.0	Code	IRC2015/TPI2014	Matrix-R							Weight: 55 lb	FT = 20%F, 11%E

LUMBER

TOP CHORD	2x4 SP No.2(flat)
BOT CHORD	2x4 SP No.2(flat)
WEBS	2x4 SP No.3(flat)
OTHERS	2x4 SP No.3(flat)

BRACING

TOP CHORD	Structural wood sheathing directly applied or 6-0-0 oc purlins, except end verticals.
BOT CHORD	Rigid ceiling directly applied or 10-0-0 oc bracing.

REACTIONS All bearings 12-8-0.
(lb) - Max Grav All reactions 250 (lb) or less at joint(s) 12, 13, 14, 15, 16, 17, 18, 19, 20, 21, 22

FORCES (lb) - Max. Comp./Max. Ten. - All forces 250 (lb) or less except when shown.

NOTES

1) All plates are 1.5x3 MT20 unless otherwise indicated.
2) Gable requires continuous bottom chord bearing.
3) Truss to be fully sheathed from one face or securely braced against lateral movement (i.e. diagonal web).
4) Gable studs spaced at 1-4-0 oc.
5) This truss is designed in accordance with the 2015 International Residential Code sections R502.11.1 and R802.10.2 and referenced standard ANSI/TPI 1.
6) Recommend 2x6 strongbacks, on edge, spaced at 10-00-00 oc and fastened to each truss with 3-10d (0.131" X 3") nails. Strongbacks to be attached to walls at their outer ends or restrained by other means.

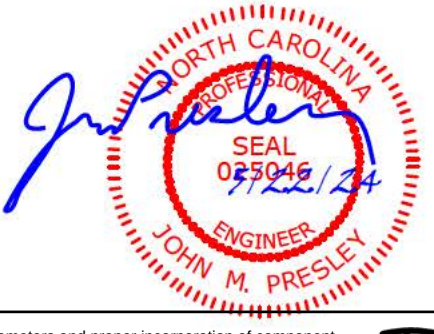

Job	Truss	Truss Type	Qty	Ply	PBS\SELMA GEORGIAN GR 2ND FLOOR
72416252	2KW3	Truss	1	1	Job Reference (optional)

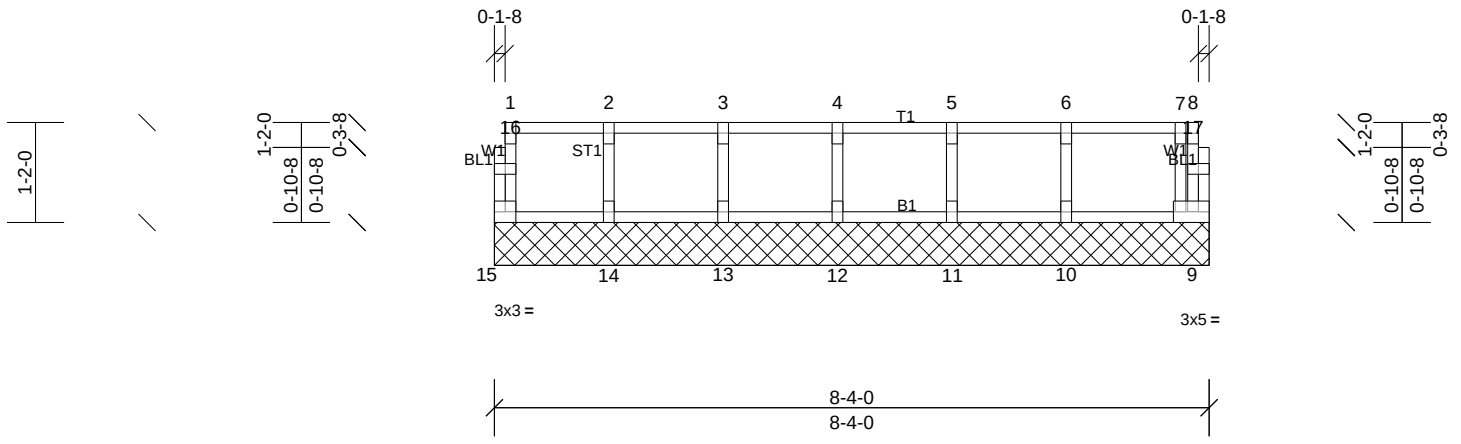

Scale = 1:27

Loading	(psf)	Spacing	2-0-0	CSI		DEFL	in	(loc)	l/defl	L/d	PLATES	GRIP
TCLL	40.0	Plate Grip DOL	1.00	TC	0.09	Vert(LL)	n/a	-	n/a	999	MT20	244/190
TCDL	10.0	Lumber DOL	1.00	BC	0.03	Vert(TL)	n/a	-	n/a	999		
BCLL	0.0	Rep Stress Incr	YES	WB	0.03	Horiz(TL)	n/a	-	n/a	n/a		
BCDL	5.0	Code	IRC2015/TPI2014	Matrix-R							Weight: 38 lb	FT = 20%F, 11%E

LUMBER

TOP CHORD	2x4 SP No.2(flat)
BOT CHORD	2x4 SP No.2(flat)
WEBS	2x4 SP No.3(flat)
OTHERS	2x4 SP No.3(flat)

BRACING

TOP CHORD	Structural wood sheathing directly applied or 6-0-0 oc purlins, except end verticals.
BOT CHORD	Rigid ceiling directly applied or 10-0-0 oc bracing.

REACTIONS All bearings 8-4-0.
(lb) - Max Grav All reactions 250 (lb) or less at joint(s) 9, 10, 11, 12, 13, 14, 15

FORCES (lb) - Max. Comp./Max. Ten. - All forces 250 (lb) or less except when shown.

NOTES

1) All plates are 1.5x3 MT20 unless otherwise indicated.
2) Gable requires continuous bottom chord bearing.
3) Truss to be fully sheathed from one face or securely braced against lateral movement (i.e. diagonal web).
4) Gable studs spaced at 1-4-0 oc.
5) This truss is designed in accordance with the 2015 International Residential Code sections R502.11.1 and R802.10.2 and referenced standard ANSI/TPI 1.
6) Recommend 2x6 strongbacks, on edge, spaced at 10-00-00 oc and fastened to each truss with 3-10d (0.131" X 3") nails. Strongbacks to be attached to walls at their outer ends or restrained by other means.

NORTH CAROLINA PROFESSIONAL SEAL 025046 ENGINEER JOHN M. PRESLEY
5/22/24

Job	Truss	Truss Type	Qty	Ply	PBS\SELMA GEORGIAN GR 2ND FLOOR
72416252	2KW4	Truss	1	1	Job Reference (optional)

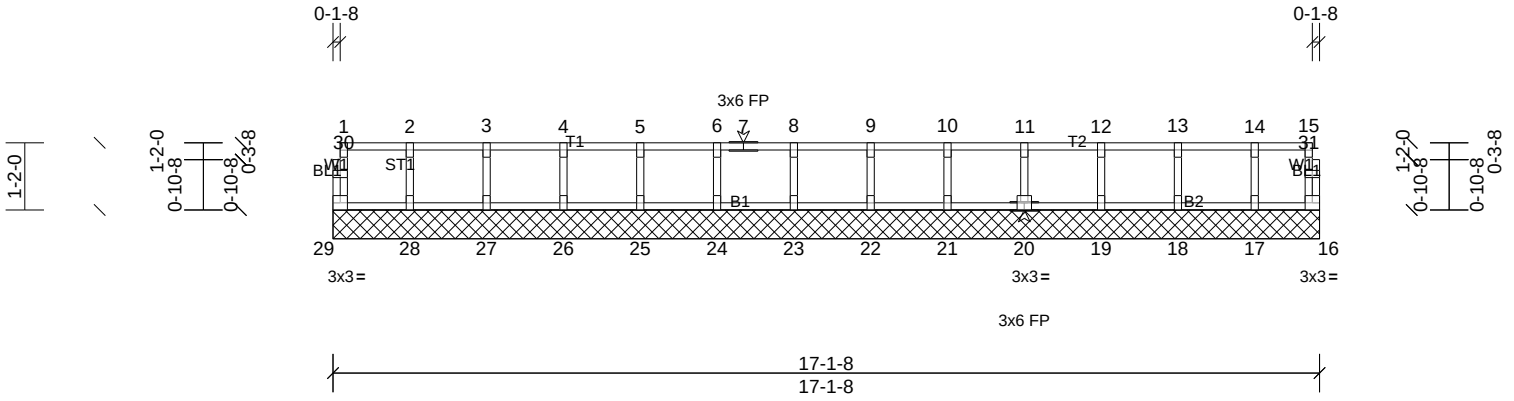

Scale = 1:40.2

Loading	(psf)	Spacing	2-0-0	CSI		DEFL	in	(loc)	l/defl	L/d	PLATES	GRIP
TCLL	40.0	Plate Grip DOL	1.00	TC	0.08	Vert(LL)	n/a	-	n/a	999	MT20	244/190
TCDL	10.0	Lumber DOL	1.00	BC	0.01	Vert(TL)	n/a	-	n/a	999		
BCLL	0.0	Rep Stress Incr	YES	WB	0.03	Horiz(TL)	n/a	-	n/a	n/a		
BCDL	5.0	Code	IRC2015/TPI2014	Matrix-R							Weight: 72 lb	FT = 20%F, 11%E

LUMBER

TOP CHORD	2x4 SP No.2(flat)
BOT CHORD	2x4 SP No.2(flat)
WEBS	2x4 SP No.3(flat)
OTHERS	2x4 SP No.3(flat)

BRACING

TOP CHORD	Structural wood sheathing directly applied or 6-0-0 oc purlins, except end verticals.
BOT CHORD	Rigid ceiling directly applied or 10-0-0 oc bracing.

REACTIONS All bearings 17-1-8.

(lb) - Max Grav All reactions 250 (lb) or less at joint(s) 16, 17, 18, 19, 20, 21, 22, 23, 24, 25, 26, 27, 28, 29

FORCES (lb) - Max. Comp./Max. Ten. - All forces 250 (lb) or less except when shown.

NOTES

1) All plates are 1.5x3 MT20 unless otherwise indicated.
2) Gable requires continuous bottom chord bearing.
3) Truss to be fully sheathed from one face or securely braced against lateral movement (i.e. diagonal web).
4) Gable studs spaced at 1-4-0 oc.
5) This truss is designed in accordance with the 2015 International Residential Code sections R502.11.1 and R802.10.2 and referenced standard ANSI/TPI 1.
6) Recommend 2x6 strongbacks, on edge, spaced at 10-00-00 oc and fastened to each truss with 3-10d (0.131" X 3") nails. Strongbacks to be attached to walls at their outer ends or restrained by other means.

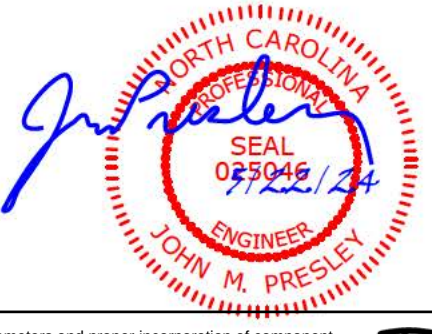

Job	Truss	Truss Type	Qty	Ply	PBS\SELMA GEORGIAN GR 2ND FLOOR
72416252	2KW5	Truss	1	1	Job Reference (optional)

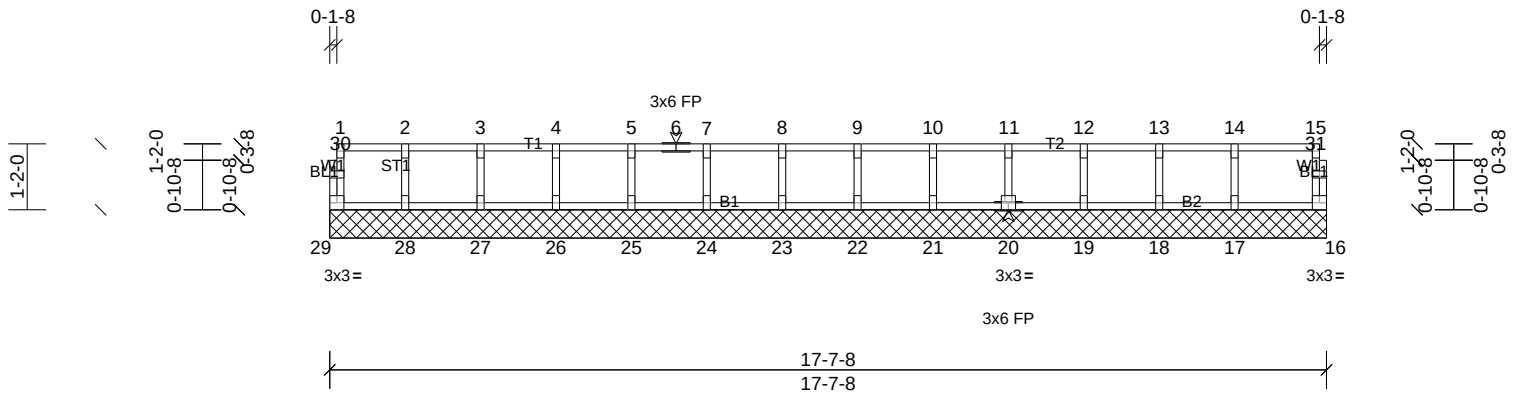

Scale = 1:40.9

Loading	(psf)	Spacing	2-0-0	CSI		DEFL	in	(loc)	l/defl	L/d	PLATES	GRIP
TCLL	40.0	Plate Grip DOL	1.00	TC	0.10	Vert(LL)	n/a	-	n/a	999	MT20	244/190
TCDL	10.0	Lumber DOL	1.00	BC	0.02	Vert(TL)	n/a	-	n/a	999		
BCLL	0.0	Rep Stress Incr	YES	WB	0.03	Horiz(TL)	n/a	-	n/a	n/a		
BCDL	5.0	Code	IRC2015/TPI2014	Matrix-R							Weight: 73 lb	FT = 20%F, 11%E

LUMBER

TOP CHORD	2x4 SP No.2(flat)
BOT CHORD	2x4 SP No.2(flat)
WEBS	2x4 SP No.3(flat)
OTHERS	2x4 SP No.3(flat)

BRACING

TOP CHORD	Structural wood sheathing directly applied or 6-0-0 oc purlins, except end verticals.
BOT CHORD	Rigid ceiling directly applied or 10-0-0 oc bracing.

REACTIONS All bearings 17-7-8.

(lb) - Max Grav All reactions 250 (lb) or less at joint(s) 16, 17, 18, 19, 20, 21, 22, 23, 24, 25, 26, 27, 28, 29

FORCES (lb) - Max. Comp./Max. Ten. - All forces 250 (lb) or less except when shown.

NOTES

1) All plates are 1.5x3 MT20 unless otherwise indicated.
2) Gable requires continuous bottom chord bearing.
3) Truss to be fully sheathed from one face or securely braced against lateral movement (i.e. diagonal web).
4) Gable studs spaced at 1-4-0 oc.
5) This truss is designed in accordance with the 2015 International Residential Code sections R502.11.1 and R802.10.2 and referenced standard ANSI/TPI 1.
6) Recommend 2x6 strongbacks, on edge, spaced at 10-00-00 oc and fastened to each truss with 3-10d (0.131" X 3") nails. Strongbacks to be attached to walls at their outer ends or restrained by other means.