| Job | Truss | Truss Type | Qty | Ply | Professional Bldrs / Hanover Craftsman |
|---|---|---|---|---|---|
| 72406537 | A | Truss | 3 | 1 | Job Reference (optional) |



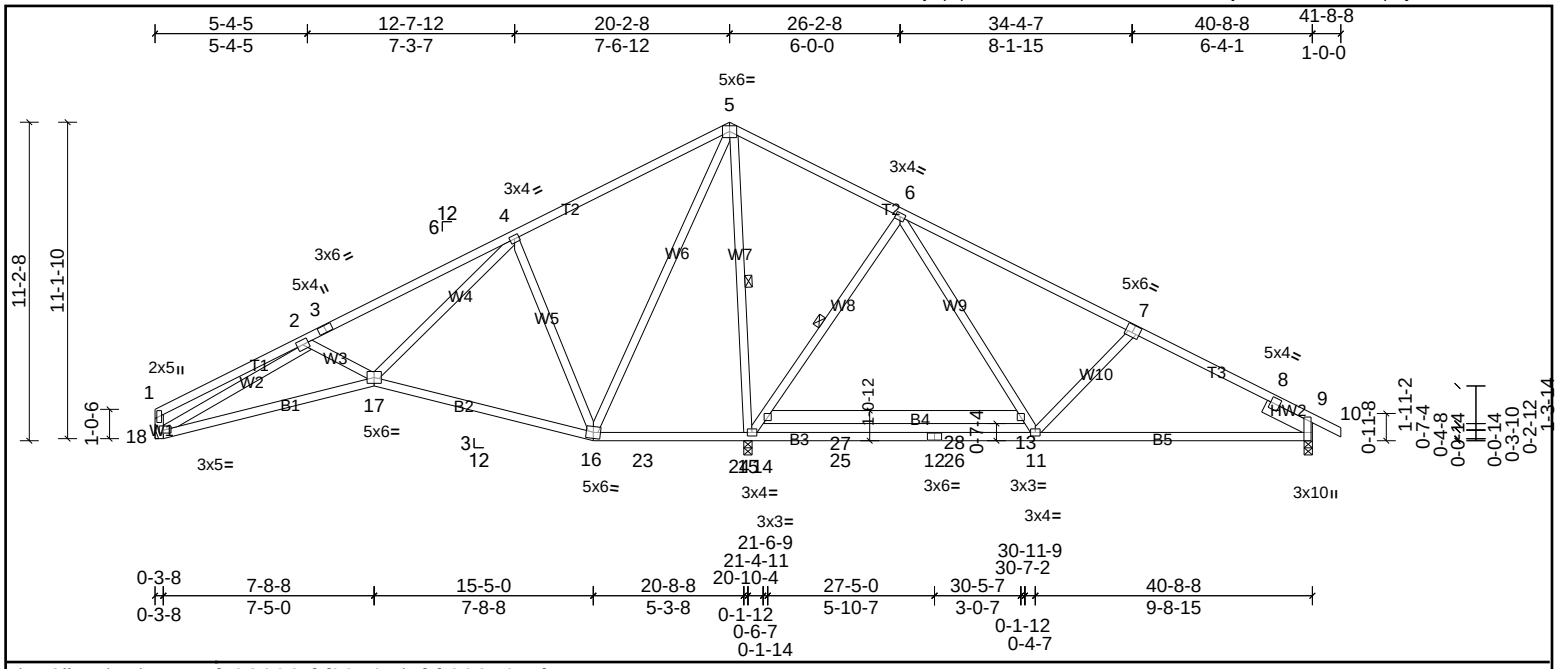


Plate Offsets (X, Y): [7:0-3-0,0-3-4], [9:0-7-9,Edge], [18:0-3-4,0-1-4]

| Loading | (psf) | Spacing | 2-0-0 | CSI | | DEFL | in | (loc) | l/defl | L/d | PLATES | GRIP |
|---|---|---|---|---|---|---|---|---|---|---|---|---|
| TCLL (roof) | 20.0 | Plate Grip DOL | 1.15 | TC | 0.77 | Vert(LL) | -0.31 | 11-15 | >769 | 240 | MT20 | 244/190 |
| TCDL | 10.0 | Lumber DOL | 1.15 | BC | 0.80 | Vert(CT) | -0.49 | 11-15 | >490 | 180 | | |
| BCLL | 0.0 * | Rep Stress Incr | YES | WB | 0.94 | Horz(CT) | 0.05 | 15 | n/a | n/a | | |
| BCDL | 10.0 | Code | IRC2015/TPI2014 | Matrix-MSH | | | | | | | Weight: 260 lb | FT = 20% |

**LUMBER**

| | |
|---|---|
| TOP CHORD | 2x4 SP No.2 |
| BOT CHORD | 2x4 SP No.2 *Except* B4:2x6 SP No.2 |
| WEBS | 2x4 SP No.3 |
| SLIDER | Right 2x6 SP No.2 -- 1-11-0 |

**BRACING**

| | |
|---|---|
| TOP CHORD | Structural wood sheathing directly applied or 5-4-3 oc purlins, except end verticals. |
| BOT CHORD | Rigid ceiling directly applied or 6-0-0 oc bracing. Except: 6-0-0 oc bracing: 13-14 |
| WEBS | 1 Row at midpt 5-15, 6-15 |

**REACTIONS** (lb/size) 9=550/0-3-8, (min. 0-1-8), 15=2450/0-3-8, (min. 0-2-15), 18=490/ Mechanical, (min. 0-1-8)
Max Horiz 18=-192 (LC 15)
Max Uplift 9=-141 (LC 11), 15=-195 (LC 10), 18=-81 (LC 10)
Max Grav 9=651 (LC 22), 15=2512 (LC 2), 18=565 (LC 21)

**FORCES** (lb) - Max. Comp./Max. Ten. - All forces 250 (lb) or less except when shown.
TOP CHORD 2-3=-881/191, 3-4=-861/230, 4-5=-10/421, 5-6=0/790, 6-7=-489/184, 7-8=-615/211, 8-9=-487/0
BOT CHORD 17-18=-390/982, 16-23=-556/376, 23-24=-556/376, 15-24=-556/376, 9-11=-94/612
WEBS 5-16=-314/811, 5-15=-1529/372, 14-15=-984/275, 6-14=-798/330, 6-13=-52/834, 11-13=-109/590, 7-11=-420/303, 2-18=-927/251, 2-17=-300/268, 4-17=-176/786, 4-16=-719/349

**NOTES**

1) Unbalanced roof live loads have been considered for this design.
2) Wind: ASCE 7-10; Vult=130mph (3-second gust) Vasd=103mph; TCDL=6.0psf; BCDL=6.0psf; h=35ft; Cat. II; Exp B; Enclosed; MWFRS (envelope) exterior zone and C-C Exterior (2) zone; cantilever left and right exposed ; end vertical left and right exposed;C-C for members and forces & MWFRS for reactions shown; Lumber DOL=1.60 plate grip DOL=1.60
3) This truss has been designed for a 10.0 psf bottom chord live load nonconcurrent with any other live loads.
4) * This truss has been designed for a live load of 20.0psf on the bottom chord in all areas where a rectangle 3-06-00 tall by 2-00-00 wide will fit between the bottom chord and any other members, with BCDL = 10.0psf.
5) Provide mechanical connection (by others) of truss to bearing plate capable of withstanding 195 lb uplift at joint 15, 141 lb uplift at joint 9 and 81 lb uplift at joint 18.
6) This truss is designed in accordance with the 2015 International Residential Code sections R502.11.1 and R802.10.2 and referenced standard ANSI/ TPI 1.

| Job | Truss | Truss Type | Qty | Ply | Professional Bldrs / Hanover Craftsman |
|---|---|---|---|---|---|
| 72406537 | A1 | Truss | 5 | 1 | Job Reference (optional) |



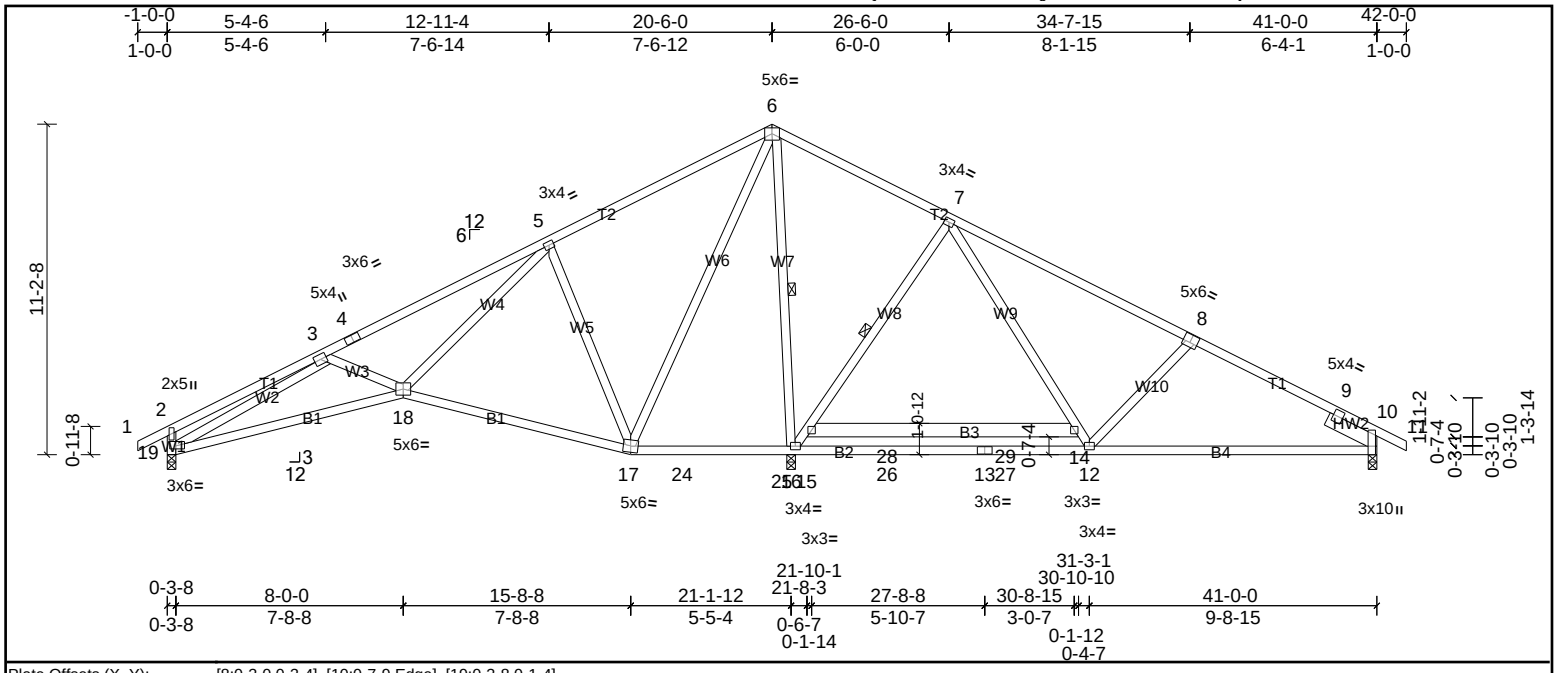


Plate Offsets (X, Y): [8:0-3-0,0-3-4], [10:0-7-9,Edge], [19:0-3-8,0-1-4]

| Loading | (psf) | Spacing | 2-0-0 | CSI | | DEFL | in | (loc) | l/defl | L/d | PLATES | GRIP |
|---|---|---|---|---|---|---|---|---|---|---|---|---|
| TCLL (roof) | 20.0 | Plate Grip DOL | 1.15 | TC | 0.79 | Vert(LL) | -0.31 | 12-16 | >768 | 240 | MT20 | 244/190 |
| TCDL | 10.0 | Lumber DOL | 1.15 | BC | 0.80 | Vert(CT) | -0.49 | 12-16 | >491 | 180 | | |
| BCLL | 0.0 * | Rep Stress Incr | YES | WB | 0.95 | Horz(CT) | 0.05 | 16 | n/a | n/a | | |
| BCDL | 10.0 | Code | IRC2015/TPI2014 | Matrix-MSH | | | | | | | Weight: 262 lb | FT = 20% |

**LUMBER**

| | |
|---|---|
| TOP CHORD | 2x4 SP No.2 |
| BOT CHORD | 2x4 SP No.2 *Except* B3:2x6 SP No.2 |
| WEBS | 2x4 SP No.3 |
| SLIDER | Right 2x6 SP No.2 -- 1-11-0 |

**BRACING**

| | |
|---|---|
| TOP CHORD | Structural wood sheathing directly applied or 5-11-12 oc purlins, except end verticals. |
| BOT CHORD | Rigid ceiling directly applied or 6-0-0 oc bracing. Except: 6-0-0 oc bracing: 14-15 |
| WEBS | 1 Row at midpt 6-16, 7-16 |

**REACTIONS** (lb/size) 10=541/0-3-8, (min. 0-1-8), 16=2472/0-3-8, (min. 0-3-0), 19=569/0-3-8, (min. 0-1-8)
Max Horiz 19=-181 (LC 15)
Max Uplift 10=-142 (LC 11), 16=-202 (LC 10), 19=-108 (LC 10)
Max Grav 10=648 (LC 22), 16=2529 (LC 2), 19=642 (LC 21)

**FORCES** (lb) - Max. Comp./Max. Ten. - All forces 250 (lb) or less except when shown.

TOP CHORD 2-3=-280/98, 3-4=-876/183, 4-5=-691/220, 5-6=0/430, 6-7=-6/808, 7-8=-484/186, 8-9=-610/212, 9-10=-490/0, 2-19=-304/175

BOT CHORD 18-19=-413/1015, 17-24=-571/380, 24-25=-571/380, 16-25=-571/380, 10-12=-95/608

WEBS 5-17=-729/352, 6-17=-318/822, 6-16=-1550/377, 15-16=-985/276, 7-15=-798/330, 7-14=-53/836, 12-14=-109/591, 8-12=-421/303, 3-18=-329/288, 5-18=-169/787, 3-19=-918/247

**NOTES**

1) Unbalanced roof live loads have been considered for this design.
2) Wind: ASCE 7-10; Vult=130mph (3-second gust) Vasd=103mph; TCDL=6.0psf; BCDL=6.0psf; h=35ft; Cat. II; Exp B; Enclosed; MWFRS (envelope) exterior zone and C-C Exterior (2) zone; cantilever left and right exposed ; end vertical left and right exposed;C-C for members and forces & MWFRS for reactions shown; Lumber DOL=1.60 plate grip DOL=1.60
3) This truss has been designed for a 10.0 psf bottom chord live load nonconcurrent with any other live loads.
4) * This truss has been designed for a live load of 20.0psf on the bottom chord in all areas where a rectangle 3-06-00 tall by 2-00-00 wide will fit between the bottom chord and any other members, with BCDL = 10.0psf.
5) Bearing at joint(s) 19 considers parallel to grain value using ANSI/TPI 1 angle to grain formula. Building designer should verify capacity of bearing surface.
6) Provide mechanical connection (by others) of truss to bearing plate capable of withstanding 202 lb uplift at joint 16, 142 lb uplift at joint 10 and 108 lb uplift at joint 19.
7) This truss is designed in accordance with the 2015 International Residential Code sections R502.11.1 and R802.10.2 and referenced standard ANSI/TPI 1.

NORTH CAROLINA PROFESSIONAL SEAL 054919 ENGINEER HUNTER B. DOSS
3/4/2024

| Job | Truss | Truss Type | Qty | Ply | Professional Bldrs / Hanover Craftsman |
|---|---|---|---|---|---|
| 72406537 | A2 | Truss | 4 | 1 | Job Reference (optional) |



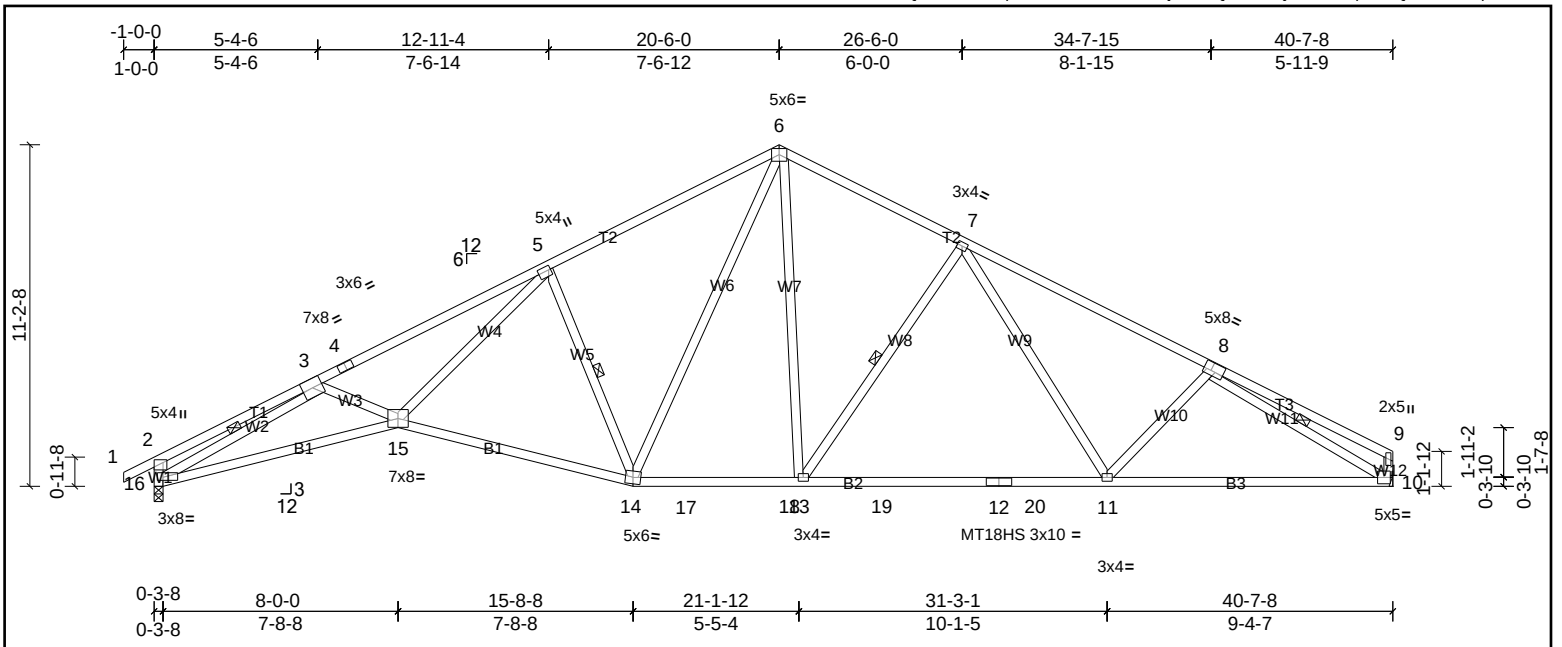


Plate Offsets (X, Y): [2:0-2-0,0-1-12], [5:0-1-12,0-0-12], [8:0-3-0,0-3-4], [16:0-5-12,0-1-4]

| Loading | (psf) | Spacing | 2-0-0 | CSI | | DEFL | in | (loc) | l/defl | L/d | PLATES | GRIP |
|---|---|---|---|---|---|---|---|---|---|---|---|---|
| TCLL (roof) | 20.0 | Plate Grip DOL | 1.15 | TC | 0.80 | Vert(LL) | -0.41 | 11-13 | >999 | 240 | MT20 | 244/190 |
| TCDL | 10.0 | Lumber DOL | 1.15 | BC | 0.87 | Vert(CT) | -0.74 | 11-13 | >657 | 180 | MT18HS | 244/190 |
| BCLL | 0.0 * | Rep Stress Incr | YES | WB | 0.99 | Horz(CT) | 0.26 | 10 | n/a | n/a | | |
| BCDL | 10.0 | Code | IRC2015/TPI2014 | Matrix-MSH | | | | | | | Weight: 244 lb | FT = 20% |

**LUMBER**

| | |
|---|---|
| TOP CHORD | 2x4 SP SS *Except* T1,T3:2x4 SP No.2 |
| BOT CHORD | 2x4 SP No.1 |
| WEBS | 2x4 SP No.3 |

**BRACING**

| | |
|---|---|
| TOP CHORD | Structural wood sheathing directly applied, except end verticals. |
| BOT CHORD | Rigid ceiling directly applied or 6-5-0 oc bracing. |
| WEBS | 1 Row at midpt 5-14, 7-13, 8-10, 3-16 |

**REACTIONS** (lb/size) 10=1612/ Mechanical, (min. 0-1-8), 16=1683/0-3-8, (min. 0-1-8)
Max Horiz 16=174 (LC 7)
Max Uplift 10=-216 (LC 11), 16=-245 (LC 10)

**FORCES** (lb) - Max. Comp./Max. Ten. - All forces 250 (lb) or less except when shown.

TOP CHORD 2-3=-540/173, 3-4=-4198/1046, 4-5=-4110/1083, 5-6=-2130/772, 6-7=-1828/666, 7-8=-2420/717, 8-9=-295/113, 2-16=-453/219

BOT CHORD 15-16=-922/3665, 14-15=-471/2318, 14-17=-155/1516, 17-18=-155/1516, 13-18=-155/1516, 13-19=-349/1888, 12-19=-349/1888, 12-20=-349/1888, 11-20=-349/1888, 10-11=-530/2153

WEBS 5-14=-1185/480, 6-14=-294/747, 6-13=-174/822, 7-13=-637/328, 7-11=-49/433, 8-10=-2330/627, 3-15=0/270, 5-15=-421/2096, 3-16=-3727/974

**NOTES**

1) Unbalanced roof live loads have been considered for this design.
2) Wind: ASCE 7-10; Vult=130mph (3-second gust) Vasd=103mph; TCDL=6.0psf; BCDL=6.0psf; h=35ft; Cat. II; Exp B; Enclosed; MWFRS (envelope) exterior zone and C-C Exterior (2) zone; cantilever left and right exposed ; end vertical left and right exposed;C-C for members and forces & MWFRS for reactions shown; Lumber DOL=1.60 plate grip DOL=1.60
3) All plates are MT20 plates unless otherwise indicated.
4) This truss has been designed for a 10.0 psf bottom chord live load nonconcurrent with any other live loads.
5) * This truss has been designed for a live load of 20.0psf on the bottom chord in all areas where a rectangle 3-06-00 tall by 2-00-00 wide will fit between the bottom chord and any other members, with BCDL = 10.0psf.
6) Bearing at joint(s) 16 considers parallel to grain value using ANSI/TPI 1 angle to grain formula. Building designer should verify capacity of bearing surface.
7) Provide mechanical connection (by others) of truss to bearing plate capable of withstanding 216 lb uplift at joint 10 and 245 lb uplift at joint 16.
8) This truss is designed in accordance with the 2015 International Residential Code sections R502.11.1 and R802.10.2 and referenced standard ANSI/TPI 1.

NORTH CAROLINA PROFESSIONAL SEAL 054919 ENGINEER HUNTER B. DOSS
3/4/2024

| Job | Truss | Truss Type | Qty | Ply | Professional Bldrs / Hanover Craftsman |
|---|---|---|---|---|---|
| 72406537 | A3 | Truss | 3 | 1 | Job Reference (optional) |



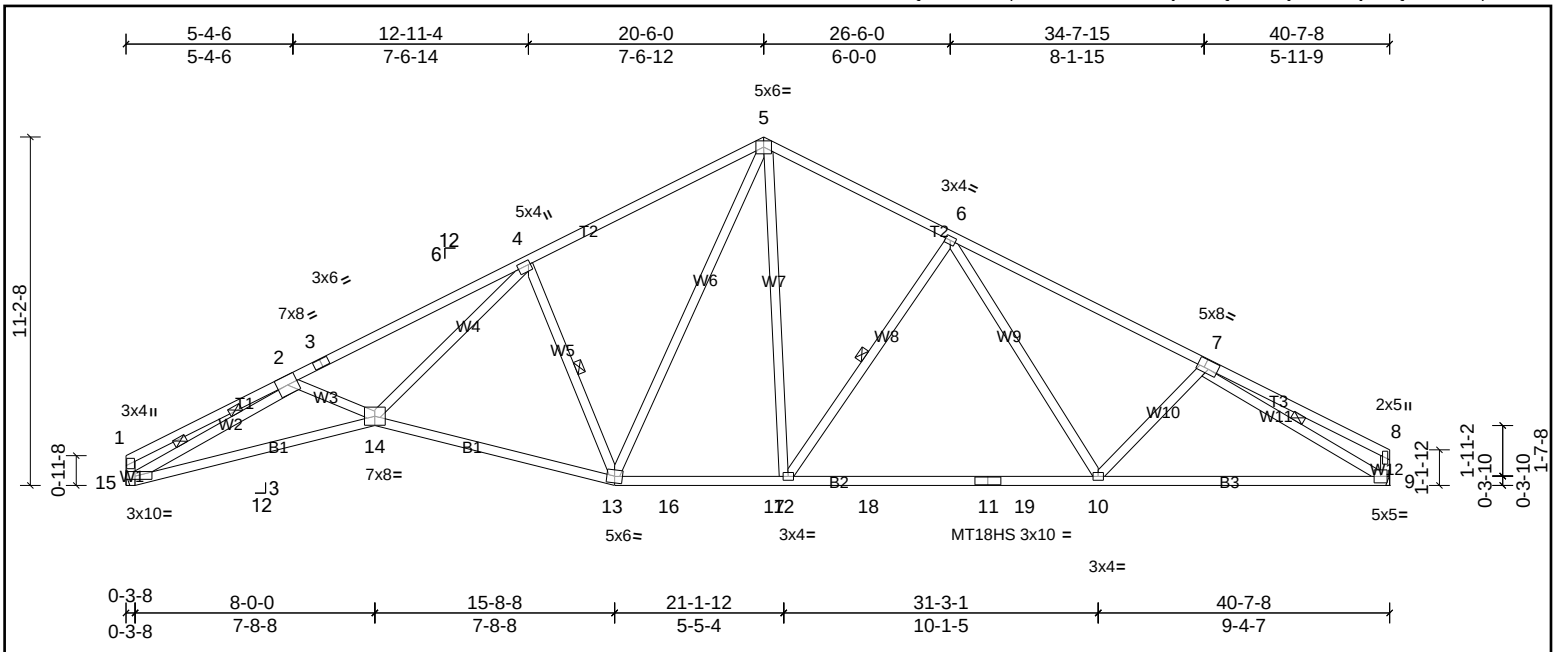


Plate Offsets (X, Y): [4:0-1-12,0-0-12], [7:0-2-12,0-3-4], [15:0-6-8,0-1-4]

| Loading | (psf) | Spacing | 2-0-0 | CSI | | DEFL | in | (loc) | l/defl | L/d | PLATES | GRIP |
|---|---|---|---|---|---|---|---|---|---|---|---|---|
| TCLL (roof) | 20.0 | Plate Grip DOL | 1.15 | TC | 0.75 | Vert(LL) | -0.41 | 10-12 | >999 | 240 | MT20 | 244/190 |
| TCDL | 10.0 | Lumber DOL | 1.15 | BC | 0.87 | Vert(CT) | -0.74 | 10-12 | >655 | 180 | MT18HS | 244/190 |
| BCLL | 0.0 * | Rep Stress Incr | YES | WB | 0.92 | Horz(CT) | 0.27 | 9 | n/a | n/a | | |
| BCDL | 10.0 | Code | IRC2015/TPI2014 | Matrix-MSH | | | | | | | Weight: 243 lb | FT = 20% |

**LUMBER**

| | |
|---|---|
| TOP CHORD | 2x4 SP SS *Except* T1,T3:2x4 SP No.2 |
| BOT CHORD | 2x4 SP No.1 |
| WEBS | 2x4 SP No.3 |

**BRACING**

| | | |
|---|---|---|
| TOP CHORD | Structural wood sheathing directly applied or 2-2-0 oc purlins, except end verticals. | |
| BOT CHORD | Rigid ceiling directly applied or 6-4-7 oc bracing. | |
| WEBS | 1 Row at midpt | 4-13, 6-12, 7-9 |
| WEBS | 2 Rows at 1/3 pts | 2-15 |

**REACTIONS** (lb/size) 9=1613/ Mechanical, (min. 0-1-8), 15=1613/ Mechanical, (min. 0-1-8)
Max Horiz 15=163 (LC 7)
Max Uplift 9=-216 (LC 11), 15=-219 (LC 10)

**FORCES** (lb) - Max. Comp./Max. Ten. - All forces 250 (lb) or less except when shown.

TOP CHORD 1-2=-452/135, 2-3=-4217/1055, 3-4=-4128/1092, 4-5=-2132/773, 5-6=-1829/667, 6-7=-2422/718, 7-8=-295/113, 1-15=-327/125

BOT CHORD 14-15=-936/3693, 13-14=-473/2322, 13-16=-156/1518, 16-17=-156/1518, 12-17=-156/1518, 12-18=-350/1890, 11-18=-350/1890, 11-19=-350/1890, 10-19=-350/1890, 9-10=-531/2154

WEBS 4-13=-1188/481, 5-13=-294/749, 5-12=-174/822, 6-12=-637/327, 6-10=-49/433, 7-9=-2332/628, 2-14=0/264, 4-14=-430/2114, 2-15=-3843/1026

**NOTES**

1) Unbalanced roof live loads have been considered for this design.
2) Wind: ASCE 7-10; Vult=130mph (3-second gust) Vasd=103mph; TCDL=6.0psf; BCDL=6.0psf; h=35ft; Cat. II; Exp B; Enclosed; MWFRS (envelope) exterior zone and C-C Exterior (2) zone; cantilever left and right exposed ; end vertical left and right exposed;C-C for members and forces & MWFRS for reactions shown; Lumber DOL=1.60 plate grip DOL=1.60
3) All plates are MT20 plates unless otherwise indicated.
4) This truss has been designed for a 10.0 psf bottom chord live load nonconcurrent with any other live loads.
5) * This truss has been designed for a live load of 20.0psf on the bottom chord in all areas where a rectangle 3-06-00 tall by 2-00-00 wide will fit between the bottom chord and any other members, with BCDL = 10.0psf.
6) Provide mechanical connection (by others) of truss to bearing plate capable of withstanding 216 lb uplift at joint 9 and 219 lb uplift at joint 15.
7) This truss is designed in accordance with the 2015 International Residential Code sections R502.11.1 and R802.10.2 and referenced standard ANSI/TPI 1.

NORTH CAROLINA PROFESSIONAL SEAL 054919 ENGINEER HUNTER B. DOSS
3/4/2024

| Job | Truss | Truss Type | Qty | Ply | Professional Bldrs / Hanover Craftsman |
|---|---|---|---|---|---|
| 72406537 | A3G | Truss | 1 | 1 | Job Reference (optional) |



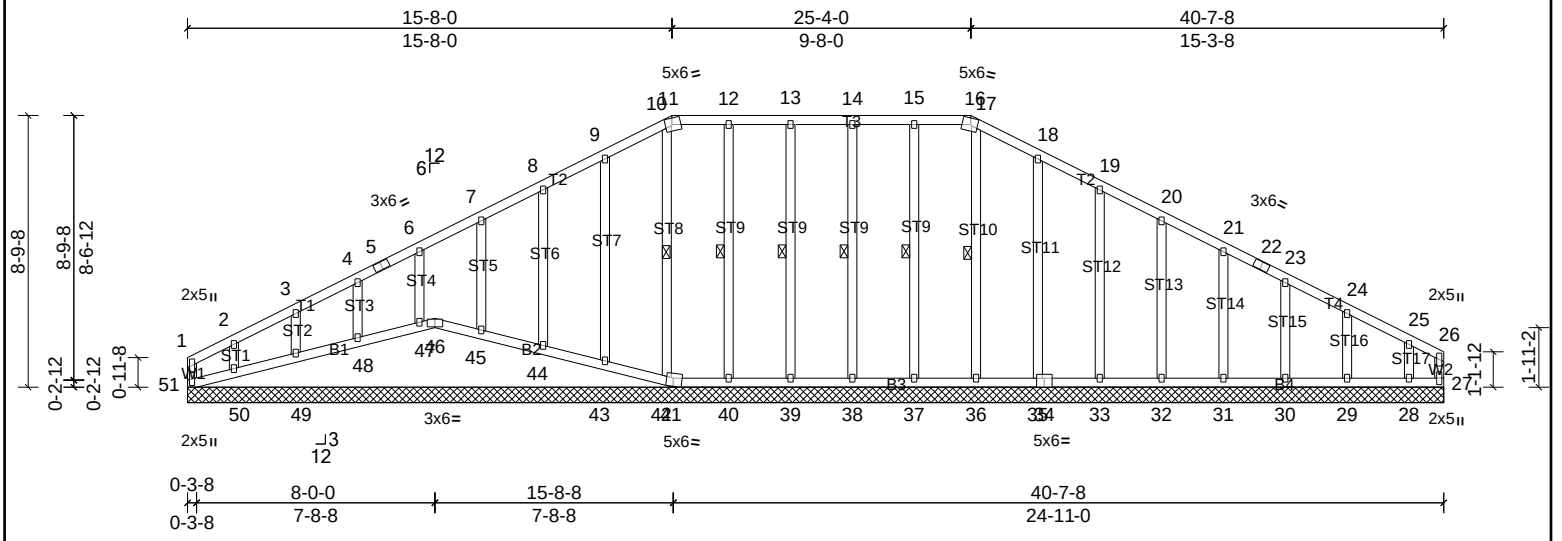


Plate Offsets (X, Y): [11:0-3-0,0-0-12], [16:0-3-0,0-0-12]

| Loading | (psf) | Spacing | 2-0-0 | CSI | | DEFL | in | (loc) | l/defl | L/d | PLATES | GRIP |
|---|---|---|---|---|---|---|---|---|---|---|---|---|
| TCLL (roof) | 20.0 | Plate Grip DOL | 1.15 | TC | 0.13 | Vert(LL) | n/a | - | n/a | 999 | MT20 | 244/190 |
| TCDL | 10.0 | Lumber DOL | 1.15 | BC | 0.07 | Vert(TL) | n/a | - | n/a | 999 | | |
| BCLL | 0.0 * | Rep Stress Incr | YES | WB | 0.13 | Horiz(TL) | 0.01 | 27 | n/a | n/a | | |
| BCDL | 10.0 | Code | IRC2015/TPI2014 | Matrix-MR | | | | | | | Weight: 278 lb | FT = 20% |

**LUMBER**

| | |
|---|---|
| TOP CHORD | 2x4 SP No.2 |
| BOT CHORD | 2x4 SP No.2 |
| WEBS | 2x4 SP No.3 |
| OTHERS | 2x4 SP No.3 |

**BRACING**

| | |
|---|---|
| TOP CHORD | Structural wood sheathing directly applied or 6-0-0 oc purlins, except end verticals, and 2-0-0 oc purlins (6-0-0 max.): 11-16. |
| BOT CHORD | Rigid ceiling directly applied or 10-0-0 oc bracing, Except: 6-0-0 oc bracing: 46-47. |
| WEBS | 1 Row at midpt 13-39, 14-38, 12-40, 10-42, 15-37, 17-36 |

**REACTIONS** All bearings 40-7-8.

(lb) - Max Horiz 51=132 (LC 7)

Max Uplift All uplift 100 (lb) or less at joint(s) 27, 29, 30, 31, 32, 33, 35, 37, 38, 39, 40, 41, 43, 44, 45, 46, 47, 48, 49, 51 except 28=-144 (LC 11), 50=-142 (LC 10)

Max Grav All reactions 250 (lb) or less at joint(s) 27, 28, 29, 30, 31, 32, 33, 35, 36, 37, 38, 39, 40, 41, 42, 43, 44, 45, 46, 47, 48, 49, 50, 51

**FORCES** (lb) - Max. Comp./Max. Ten. - All forces 250 (lb) or less except when shown.

TOP CHORD 8-9=-107/258, 9-10=-126/309, 10-11=-114/274, 11-12=-113/297, 12-13=-113/297, 13-14=-113/297, 14-15=-113/297, 15-16=-113/297, 16-17=-115/274, 17-18=-126/309, 18-19=-107/258

**NOTES**

1) Unbalanced roof live loads have been considered for this design.
2) Wind: ASCE 7-10; Vult=130mph (3-second gust) Vasd=103mph; TCDL=6.0psf; BCDL=6.0psf; h=35ft; Cat. II; Exp B; Enclosed; MWFRS (envelope) exterior zone and C-C Exterior (2) zone; cantilever left and right exposed ; end vertical left and right exposed;C-C for members and forces & MWFRS for reactions shown; Lumber DOL=1.60 plate grip DOL=1.60
3) Truss designed for wind loads in the plane of the truss only.
4) Provide adequate drainage to prevent water ponding.
5) All plates are 2x3 MT20 unless otherwise indicated.
6) Gable requires continuous bottom chord bearing.
7) Truss to be fully sheathed from one face or securely braced against lateral movement (i.e. diagonal web).
8) Gable studs spaced at 2-0-0 oc.
9) This truss has been designed for a 10.0 psf bottom chord live load nonconcurrent with any other live loads.
10) * This truss has been designed for a live load of 20.0psf on the bottom chord in all areas where a rectangle 3-06-00 tall by 2-00-00 wide will fit between the bottom chord and any other members.
11) Provide mechanical connection (by others) of truss to bearing plate capable of withstanding 100 lb uplift at joint(s) 51, 27, 46, 41, 39, 38, 40, 43, 44, 45, 47, 48, 49, 37, 35, 33, 32, 31, 30, 29 except (jt=lb) 50=141, 28=144.
12) Beveled plate or shim required to provide full bearing surface with truss chord at joint(s) 46, 42, 43, 44, 45, 47, 48, 49, 50.
13) This truss is designed in accordance with the 2015 International Residential Code sections R502.11.1 and R802.10.2 and referenced standard ANSI/TPI 1.
14) Graphical purlin representation does not depict the size or the orientation of the purlin along the top and/or bottom chord.

NORTH CAROLINA PROFESSIONAL SEAL 054919 ENGINEER HUNTER B. DOSS
3/4/2024

| Job | Truss | Truss Type | Qty | Ply | Professional Bldrs / Hanover Craftsman |
|---|---|---|---|---|---|
| 72406537 | A4 | Truss | 1 | 1 | Job Reference (optional) |

UFP Mid Atlantic LLC, 5631 S. NC 62, Burlington, NC, r thomas — Run: 8.62 S Sep 22 2022 Print: 8.620 S Sep 22 2022 MiTek Industries, Inc. Mon Mar 04 15:57:00 — Page: 1

ID:wIPFXjKqcq6XXvXIPvPLdKz3TNl-JQ25SXTqBeRWyoEbWBoXSXiHZg2u9wVqjj1dL6zeGTX

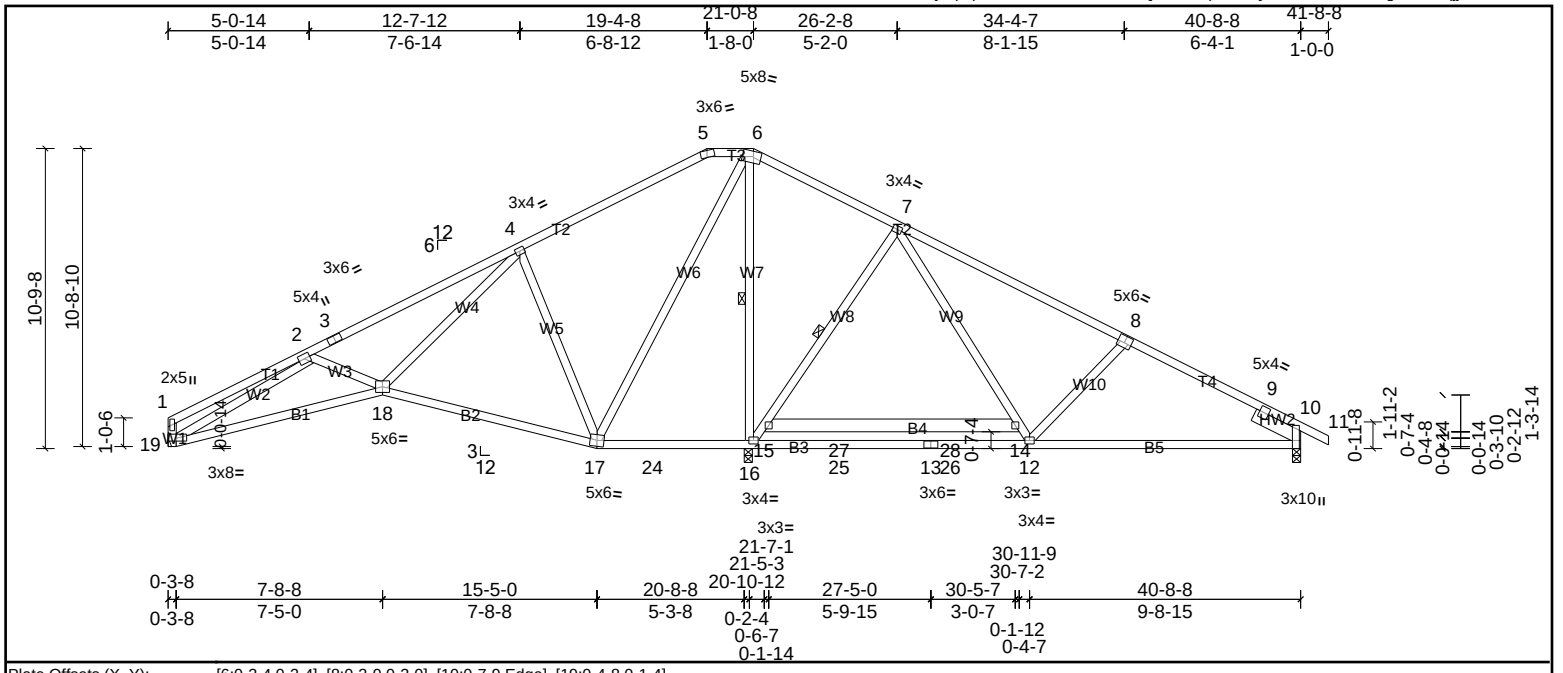


Plate Offsets (X, Y): [6:0-3-4,0-2-4], [8:0-3-0,0-3-0], [10:0-7-9,Edge], [19:0-4-8,0-1-4]

| Loading | (psf) | Spacing | 2-0-0 | CSI | | DEFL | in | (loc) | l/defl | L/d | PLATES | GRIP |
|---|---|---|---|---|---|---|---|---|---|---|---|---|
| TCLL (roof) | 20.0 | Plate Grip DOL | 1.15 | TC | 0.80 | Vert(LL) | -0.31 | 12-16 | >762 | 240 | MT20 | 244/190 |
| TCDL | 10.0 | Lumber DOL | 1.15 | BC | 0.83 | Vert(CT) | -0.50 | 12-16 | >474 | 180 | | |
| BCLL | 0.0 * | Rep Stress Incr | YES | WB | 0.93 | Horz(CT) | 0.09 | 10 | n/a | n/a | | |
| BCDL | 10.0 | Code | IRC2015/TPI2014 | Matrix-MSH | | | | | | | Weight: 258 lb | FT = 20% |

**LUMBER**

| | |
|---|---|
| TOP CHORD | 2x4 SP No.2 |
| BOT CHORD | 2x4 SP No.2 *Except* B4:2x6 SP No.2 |
| WEBS | 2x4 SP No.3 |
| SLIDER | Right 2x6 SP No.2 -- 1-11-0 |

**BRACING**

| | |
|---|---|
| TOP CHORD | Structural wood sheathing directly applied or 4-4-3 oc purlins, except end verticals, and 2-0-0 oc purlins (6-0-0 max.): 5-6. |
| BOT CHORD | Rigid ceiling directly applied or 6-0-0 oc bracing. Except: 6-0-0 oc bracing: 14-15 |
| WEBS | 1 Row at midpt 6-16, 7-16 |

**REACTIONS** (lb/size) 10=744/0-3-8, (min. 0-1-8), 16=2066/0-3-8, (min. 0-2-9), 19=679/ Mechanical, (min. 0-1-8)

Max Horiz 19=-185 (LC 15)

Max Uplift 10=-124 (LC 11), 16=-109 (LC 10), 19=-118 (LC 10)

Max Grav 10=769 (LC 22), 16=2161 (LC 2), 19=727 (LC 21)

**FORCES** (lb) - Max. Comp./Max. Ten. - All forces 250 (lb) or less except when shown.

TOP CHORD 2-3=-1371/291, 3-4=-1186/328, 4-5=-339/266, 5-6=-198/285, 6-7=0/385, 7-8=-715/174, 8-9=-902/212, 9-10=-459/0

BOT CHORD 18-19=-484/1381, 17-18=-132/519, 17-24=-320/338, 16-24=-320/338, 16-25=0/309, 13-25=0/309, 13-26=0/309, 12-26=0/309, 10-12=-71/805

WEBS 6-17=-313/836, 6-16=-1181/308, 15-16=-940/266, 7-15=-754/321, 7-14=-47/818, 12-14=-104/575, 8-12=-394/299, 2-19=-1394/379, 2-18=-219/272, 4-18=-204/956, 4-17=-790/352

**NOTES**

1) Unbalanced roof live loads have been considered for this design.
2) Wind: ASCE 7-10; Vult=130mph (3-second gust) Vasd=103mph; TCDL=6.0psf; BCDL=6.0psf; h=35ft; Cat. II; Exp B; Enclosed; MWFRS (envelope) exterior zone and C-C Exterior (2) zone; cantilever left and right exposed ; end vertical left and right exposed;C-C for members and forces & MWFRS for reactions shown; Lumber DOL=1.60 plate grip DOL=1.60
3) Provide adequate drainage to prevent water ponding.
4) This truss has been designed for a 10.0 psf bottom chord live load nonconcurrent with any other live loads.
5) * This truss has been designed for a live load of 20.0psf on the bottom chord in all areas where a rectangle 3-06-00 tall by 2-00-00 wide will fit between the bottom chord and any other members, with BCDL = 10.0psf.
6) Provide mechanical connection (by others) of truss to bearing plate capable of withstanding 109 lb uplift at joint 16, 124 lb uplift at joint 10 and 118 lb uplift at joint 19.
7) This truss is designed in accordance with the 2015 International Residential Code sections R502.11.1 and R802.10.2 and referenced standard ANSI/ TPI 1.
8) Graphical purlin representation does not depict the size or the orientation of the purlin along the top and/or bottom chord.

NORTH CAROLINA PROFESSIONAL SEAL 054919 ENGINEER HUNTER B. DOSS

3/4/2024

| Job | Truss | Truss Type | Qty | Ply | Professional Bldrs / Hanover Craftsman |
|---|---|---|---|---|---|
| 72406537 | A5 | Truss | 1 | 1 | Job Reference (optional) |



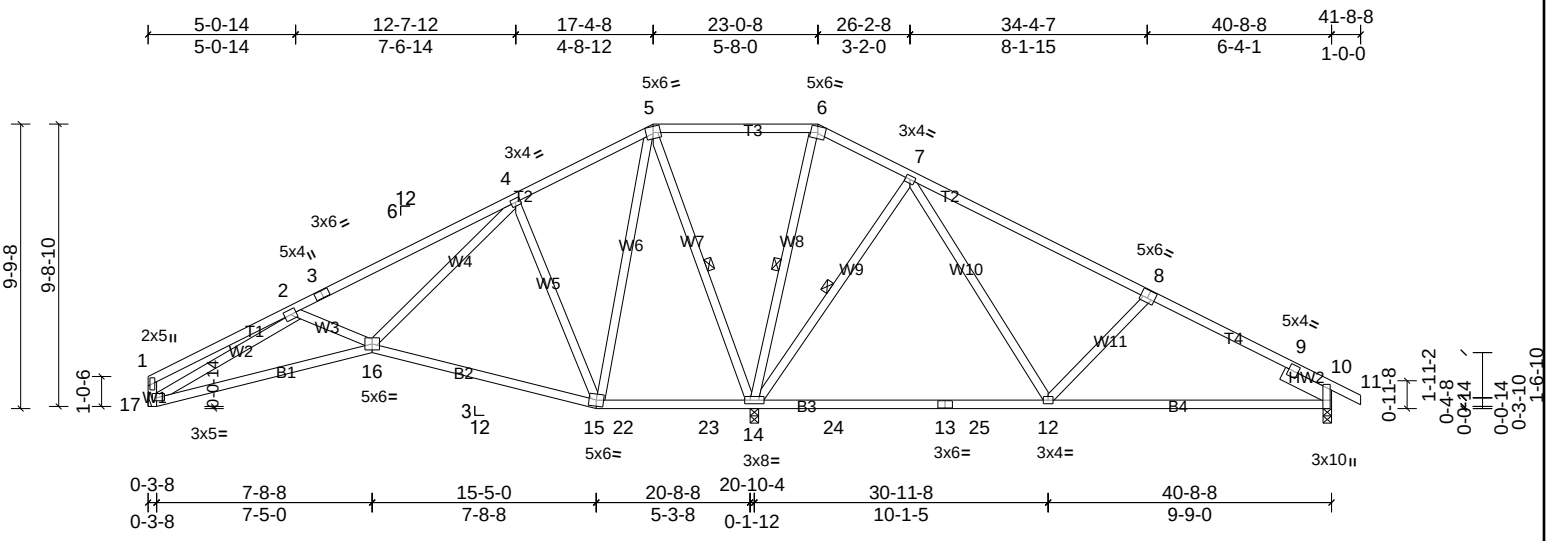


Plate Offsets (X, Y): [8:0-3-0,0-3-4], [10:0-7-9,Edge], [17:0-3-4,0-1-4]

| Loading | (psf) | Spacing | 2-0-0 | CSI | | DEFL | in | (loc) | l/defl | L/d | PLATES | GRIP |
|---|---|---|---|---|---|---|---|---|---|---|---|---|
| TCLL (roof) | 20.0 | Plate Grip DOL | 1.15 | TC | 0.70 | Vert(LL) | -0.38 | 12-14 | >629 | 240 | MT20 | 244/190 |
| TCDL | 10.0 | Lumber DOL | 1.15 | BC | 0.86 | Vert(CT) | -0.55 | 12-14 | >433 | 180 | | |
| BCLL | 0.0 * | Rep Stress Incr | YES | WB | 0.72 | Horz(CT) | 0.05 | 14 | n/a | n/a | | |
| BCDL | 10.0 | Code | IRC2015/TPI2014 | Matrix-MSH | | | | | | | Weight: 247 lb | FT = 20% |

**LUMBER**

| | |
|---|---|
| TOP CHORD | 2x4 SP No.2 |
| BOT CHORD | 2x4 SP No.2 |
| WEBS | 2x4 SP No.3 |
| SLIDER | Right 2x6 SP No.2 -- 1-11-0 |

**BRACING**

| | |
|---|---|
| TOP CHORD | Structural wood sheathing directly applied or 5-3-8 oc purlins, except end verticals, and 2-0-0 oc purlins (10-0-0 max.): 5-6. |
| BOT CHORD | Rigid ceiling directly applied or 6-0-0 oc bracing. |
| WEBS | 1 Row at midpt 5-14, 6-14, 7-14 |

**REACTIONS** (lb/size) 10=492/0-3-8, (min. 0-1-8), 14=2336/0-3-8, (min. 0-2-12), 17=476/Mechanical, (min. 0-1-8)
Max Horiz 17=-167 (LC 15)
Max Uplift 10=-156 (LC 11), 14=-258 (LC 10), 17=-70 (LC 10)
Max Grav 10=602 (LC 22), 14=2336 (LC 1), 17=558 (LC 21)

**FORCES** (lb) - Max. Comp./Max. Ten. - All forces 250 (lb) or less except when shown.

| | |
|---|---|
| TOP CHORD | 2-3=-854/130, 3-4=-752/167, 4-5=0/351, 5-6=-28/766, 6-7=-40/735, 7-8=-395/214, 8-9=-526/241, 9-10=-517/0 |
| BOT CHORD | 16-17=-348/996, 15-16=-173/250, 15-22=-377/328, 22-23=-377/328, 14-23=-377/328, 14-24=-309/235, 13-24=-309/235, 13-25=-309/235, 12-25=-309/235, 10-12=-120/536 |
| WEBS | 5-14=-1140/346, 6-14=-537/94, 7-14=-693/337, 7-12=-117/649, 8-12=-436/305, 2-16=-346/311, 4-16=-140/777, 4-15=-631/289, 5-15=-247/686, 2-17=-978/253 |

**NOTES**

1) Unbalanced roof live loads have been considered for this design.
2) Wind: ASCE 7-10; Vult=130mph (3-second gust) Vasd=103mph; TCDL=6.0psf; BCDL=6.0psf; h=35ft; Cat. II; Exp B; Enclosed; MWFRS (envelope) exterior zone and C-C Exterior (2) zone; cantilever left and right exposed ; end vertical left and right exposed;C-C for members and forces & MWFRS for reactions shown; Lumber DOL=1.60 plate grip DOL=1.60
3) Provide adequate drainage to prevent water ponding.
4) This truss has been designed for a 10.0 psf bottom chord live load nonconcurrent with any other live loads.
5) * This truss has been designed for a live load of 20.0psf on the bottom chord in all areas where a rectangle 3-06-00 tall by 2-00-00 wide will fit between the bottom chord and any other members, with BCDL = 10.0psf.
6) Provide mechanical connection (by others) of truss to bearing plate capable of withstanding 258 lb uplift at joint 14, 156 lb uplift at joint 10 and 70 lb uplift at joint 17.
7) This truss is designed in accordance with the 2015 International Residential Code sections R502.11.1 and R802.10.2 and referenced standard ANSI/TPI 1.
8) Graphical purlin representation does not depict the size or the orientation of the purlin along the top and/or bottom chord.

NORTH CAROLINA PROFESSIONAL SEAL 054919 ENGINEER HUNTER B. DOSS
3/4/2024

| Job | Truss | Truss Type | Qty | Ply | Professional Bldrs / Hanover Craftsman |
|---|---|---|---|---|---|
| 72406537 | A6 | Truss | 1 | 1 | Job Reference (optional) |



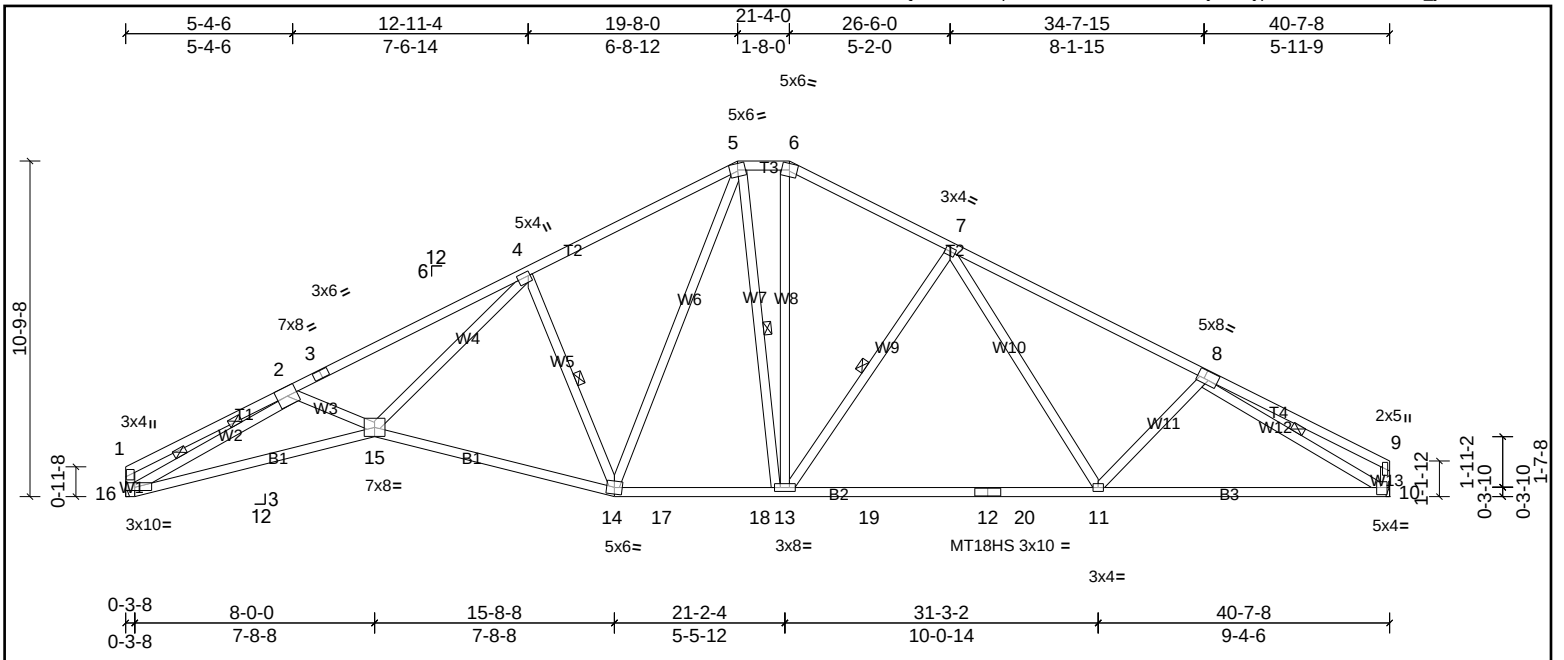


Plate Offsets (X, Y): [4:0-1-12,0-0-12], [8:0-2-12,0-3-4], [10:0-1-8,0-2-12], [16:0-6-8,0-1-4]

| Loading | (psf) | Spacing | 2-0-0 | CSI | | DEFL | in | (loc) | l/defl | L/d | PLATES | GRIP |
|---|---|---|---|---|---|---|---|---|---|---|---|---|
| TCLL (roof) | 20.0 | Plate Grip DOL | 1.15 | TC | 0.72 | Vert(LL) | -0.40 | 11-13 | >999 | 240 | MT20 | 244/190 |
| TCDL | 10.0 | Lumber DOL | 1.15 | BC | 0.86 | Vert(CT) | -0.72 | 11-13 | >668 | 180 | MT18HS | 244/190 |
| BCLL | 0.0 * | Rep Stress Incr | YES | WB | 0.92 | Horz(CT) | 0.27 | 10 | n/a | n/a | | |
| BCDL | 10.0 | Code | IRC2015/TPI2014 | Matrix-MSH | | | | | | | Weight: 256 lb | FT = 20% |

**LUMBER**

| | |
|---|---|
| TOP CHORD | 2x4 SP No.2 *Except* T2:2x4 SP SS |
| BOT CHORD | 2x4 SP No.1 |
| WEBS | 2x4 SP No.3 |

**BRACING**

| | | |
|---|---|---|
| TOP CHORD | Structural wood sheathing directly applied or 2-2-0 oc purlins, except end verticals, and 2-0-0 oc purlins (4-6-11 max.): 5-6. | |
| BOT CHORD | Rigid ceiling directly applied or 6-4-9 oc bracing. | |
| WEBS | 1 Row at midpt | 4-14, 7-13, 8-10, 5-13 |
| WEBS | 2 Rows at 1/3 pts | 2-16 |

**REACTIONS** (lb/size) 10=1613/ Mechanical, (min. 0-1-8), 16=1613/ Mechanical, (min. 0-1-8)
Max Horiz 16=158 (LC 7)
Max Uplift 10=-210 (LC 11), 16=-213 (LC 10)

**FORCES** (lb) - Max. Comp./Max. Ten. - All forces 250 (lb) or less except when shown.

TOP CHORD 1-2=-448/131, 2-3=-4217/1047, 3-4=-4125/1084, 4-5=-2127/759, 5-6=-1569/622, 6-7=-1830/658, 7-8=-2422/713, 8-9=-295/113, 1-16=-324/122

BOT CHORD 15-16=-933/3698, 14-15=-463/2316, 14-17=-174/1559, 17-18=-174/1559, 13-18=-174/1559, 13-19=-344/1889, 12-19=-344/1889, 12-20=-344/1889, 11-20=-344/1889, 10-11=-527/2155

WEBS 4-14=-1169/464, 6-13=-234/677, 7-13=-623/326, 7-11=-52/432, 8-10=-2333/624, 2-15=0/262, 4-15=-430/2119, 2-16=-3852/1025, 5-13=-178/280, 5-14=-274/711

**NOTES**

1) Unbalanced roof live loads have been considered for this design.
2) Wind: ASCE 7-10; Vult=130mph (3-second gust) Vasd=103mph; TCDL=6.0psf; BCDL=6.0psf; h=35ft; Cat. II; Exp B; Enclosed; MWFRS (envelope) exterior zone and C-C Exterior (2) zone; cantilever left and right exposed ; end vertical left and right exposed;C-C for members and forces & MWFRS for reactions shown; Lumber DOL=1.60 plate grip DOL=1.60
3) Provide adequate drainage to prevent water ponding.
4) All plates are MT20 plates unless otherwise indicated.
5) This truss has been designed for a 10.0 psf bottom chord live load nonconcurrent with any other live loads.
6) * This truss has been designed for a live load of 20.0psf on the bottom chord in all areas where a rectangle 3-06-00 tall by 2-00-00 wide will fit between the bottom chord and any other members, with BCDL = 10.0psf.
7) Provide mechanical connection (by others) of truss to bearing plate capable of withstanding 210 lb uplift at joint 10 and 213 lb uplift at joint 16.
8) This truss is designed in accordance with the 2015 International Residential Code sections R502.11.1 and R802.10.2 and referenced standard ANSI/TPI 1.
9) Graphical purlin representation does not depict the size or the orientation of the purlin along the top and/or bottom chord.

| Job | Truss | Truss Type | Qty | Ply | Professional Bldrs / Hanover Craftsman |
|---|---|---|---|---|---|
| 72406537 | A7 | Truss | 1 | 1 | Job Reference (optional) |



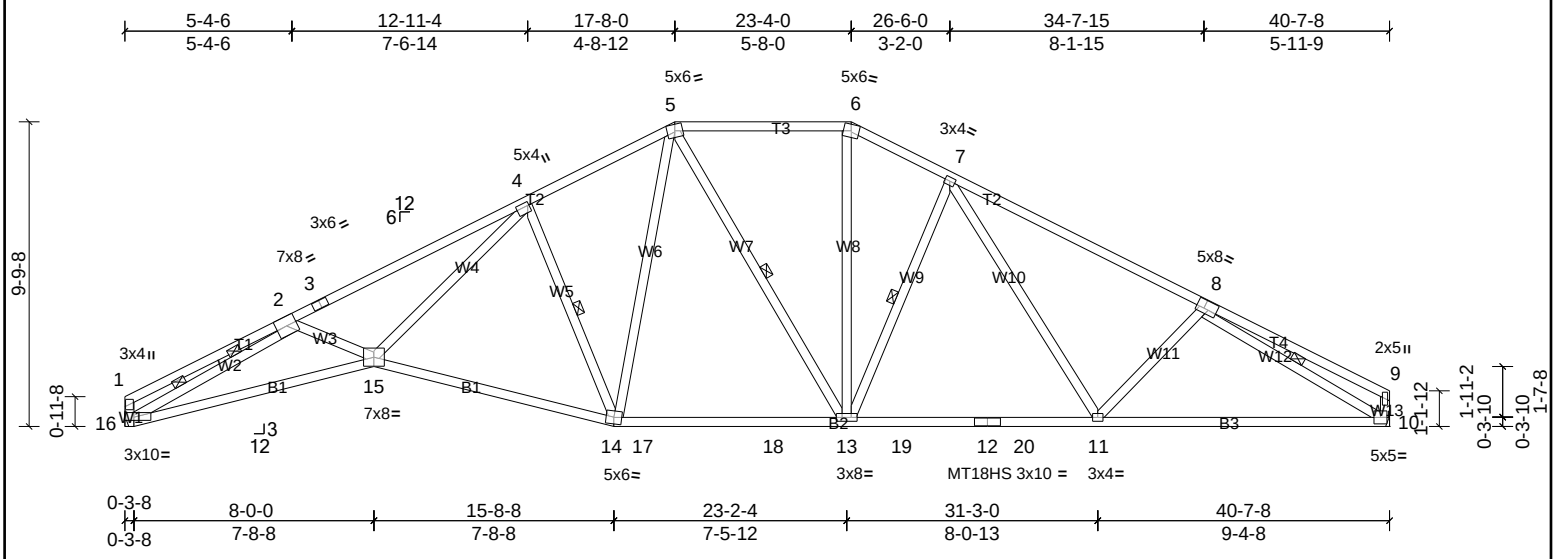


Plate Offsets (X, Y): [4:0-1-8,0-0-8], [8:0-3-0,0-3-4], [16:0-6-8,0-1-4]

| Loading | (psf) | Spacing | 2-0-0 | CSI | | DEFL | in | (loc) | l/defl | L/d | PLATES | GRIP |
|---|---|---|---|---|---|---|---|---|---|---|---|---|
| TCLL (roof) | 20.0 | Plate Grip DOL | 1.15 | TC | 0.80 | Vert(LL) | -0.27 | 13-14 | >999 | 240 | MT20 | 244/190 |
| TCDL | 10.0 | Lumber DOL | 1.15 | BC | 0.95 | Vert(CT) | -0.58 | 14-15 | >833 | 180 | MT18HS | 244/190 |
| BCLL | 0.0 * | Rep Stress Incr | YES | WB | 0.92 | Horz(CT) | 0.28 | 10 | n/a | n/a | | |
| BCDL | 10.0 | Code | IRC2015/TPI2014 | Matrix-MSH | | | | | | | Weight: 251 lb | FT = 20% |

**LUMBER**

| | |
|---|---|
| TOP CHORD | 2x4 SP No.2 *Except* T2:2x4 SP SS |
| BOT CHORD | 2x4 SP No.1 *Except* B2,B3:2x4 SP No.2 |
| WEBS | 2x4 SP No.3 |

**BRACING**

| | | |
|---|---|---|
| TOP CHORD | Structural wood sheathing directly applied or 2-2-0 oc purlins, except end verticals, and 2-0-0 oc purlins (3-5-13 max.): 5-6. | |
| BOT CHORD | Rigid ceiling directly applied or 2-2-0 oc bracing. | |
| WEBS | 1 Row at midpt | 5-13, 7-13, 8-10, 4-14 |
| WEBS | 2 Rows at 1/3 pts | 2-16 |

**REACTIONS** (lb/size) 10=1613/ Mechanical, (min. 0-1-8), 16=1613/ Mechanical, (min. 0-1-8)
Max Horiz 16=145 (LC 7)
Max Uplift 10=-195 (LC 11), 16=-199 (LC 10)

**FORCES** (lb) - Max. Comp./Max. Ten. - All forces 250 (lb) or less except when shown.

| | |
|---|---|
| TOP CHORD | 1-2=-441/124, 2-3=-4216/1027, 3-4=-4119/1064, 4-5=-2115/724, 5-6=-1699/622, 6-7=-1957/686, 7-8=-2414/706, 8-9=-302/102, 1-16=-317/116 |
| BOT CHORD | 15-16=-923/3707, 14-15=-442/2302, 14-17=-223/1687, 17-18=-223/1687, 13-18=-223/1687, 13-19=-326/1893, 12-19=-326/1893, 12-20=-326/1893, 11-20=-326/1893, 10-11=-521/2151 |
| WEBS | 6-13=-214/684, 7-13=-558/309, 7-11=-73/377, 8-10=-2320/629, 2-15=0/256, 4-14=-1110/422, 5-14=-208/654, 4-15=-430/2124, 2-16=-3867/1020 |

**NOTES**

1) Unbalanced roof live loads have been considered for this design.
2) Wind: ASCE 7-10; Vult=130mph (3-second gust) Vasd=103mph; TCDL=6.0psf; BCDL=6.0psf; h=35ft; Cat. II; Exp B; Enclosed; MWFRS (envelope) exterior zone and C-C Exterior (2) zone; cantilever left and right exposed ; end vertical left and right exposed;C-C for members and forces & MWFRS for reactions shown; Lumber DOL=1.60 plate grip DOL=1.60
3) Provide adequate drainage to prevent water ponding.
4) All plates are MT20 plates unless otherwise indicated.
5) This truss has been designed for a 10.0 psf bottom chord live load nonconcurrent with any other live loads.
6) * This truss has been designed for a live load of 20.0psf on the bottom chord in all areas where a rectangle 3-06-00 tall by 2-00-00 wide will fit between the bottom chord and any other members, with BCDL = 10.0psf.
7) Provide mechanical connection (by others) of truss to bearing plate capable of withstanding 195 lb uplift at joint 10 and 199 lb uplift at joint 16.
8) This truss is designed in accordance with the 2015 International Residential Code sections R502.11.1 and R802.10.2 and referenced standard ANSI/TPI 1.
9) Graphical purlin representation does not depict the size or the orientation of the purlin along the top and/or bottom chord.

NORTH CAROLINA PROFESSIONAL SEAL 054919 ENGINEER HUNTER B. DOSS
3/4/2024

| Job | Truss | Truss Type | Qty | Ply | Professional Bldrs / Hanover Craftsman |
|---|---|---|---|---|---|
| 72406537 | AG | Truss | 1 | 1 | Job Reference (optional) |



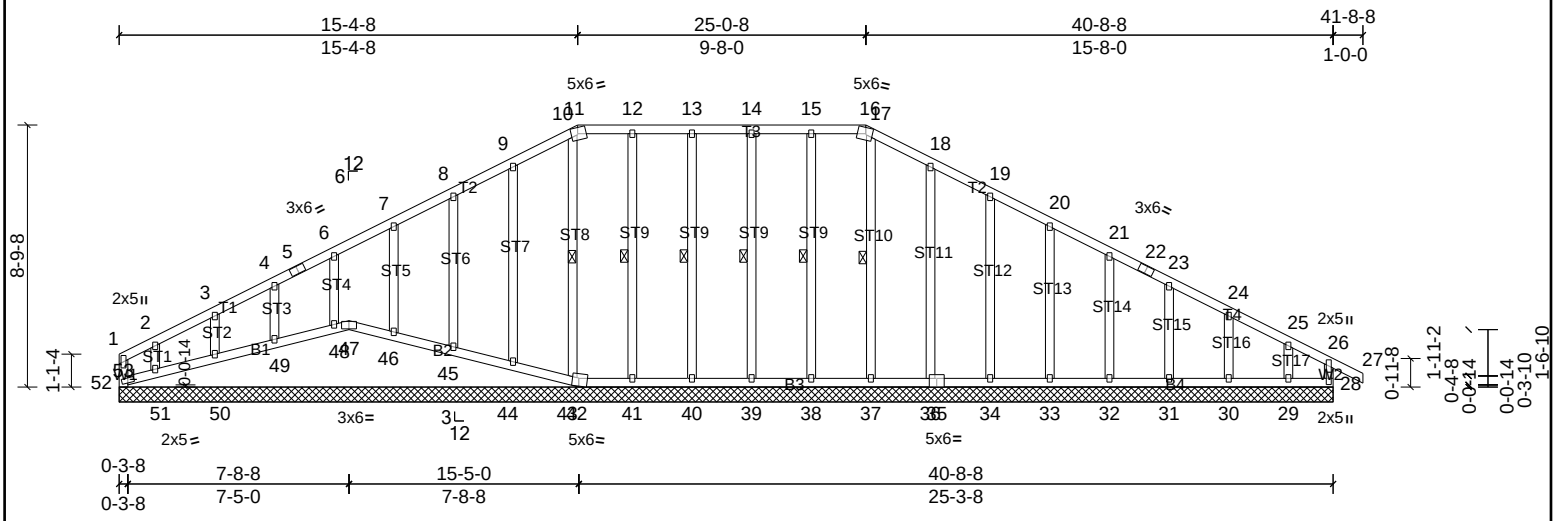


Plate Offsets (X, Y): [11:0-3-0,0-0-12], [16:0-3-0,0-0-12]

| Loading | (psf) | Spacing | 2-0-0 | CSI | | DEFL | in | (loc) | l/defl | L/d | PLATES | GRIP |
|---|---|---|---|---|---|---|---|---|---|---|---|---|
| TCLL (roof) | 20.0 | Plate Grip DOL | 1.15 | TC | 0.15 | Vert(LL) | n/a | - | n/a | 999 | MT20 | 244/190 |
| TCDL | 10.0 | Lumber DOL | 1.15 | BC | 0.10 | Vert(CT) | n/a | - | n/a | 999 | | |
| BCLL | 0.0 * | Rep Stress Incr | YES | WB | 0.13 | Horz(CT) | 0.01 | 28 | n/a | n/a | | |
| BCDL | 10.0 | Code | IRC2015/TPI2014 | Matrix-MR | | | | | | | Weight: 280 lb | FT = 20% |

**LUMBER**

| | |
|---|---|
| TOP CHORD | 2x4 SP No.2 |
| BOT CHORD | 2x4 SP No.2 |
| WEBS | 2x4 SP No.3 |
| OTHERS | 2x4 SP No.3 |

**BRACING**

| | |
|---|---|
| TOP CHORD | Structural wood sheathing directly applied or 6-0-0 oc purlins, except end verticals, and 2-0-0 oc purlins (6-0-0 max.): 11-16. |
| BOT CHORD | Rigid ceiling directly applied or 10-0-0 oc bracing, Except: 6-0-0 oc bracing: 47-48,46-47. |
| WEBS | 1 Row at midpt 13-40, 14-39, 12-41, 10-43, 15-38, 17-37 |

**REACTIONS** All bearings 40-8-8.

(lb) - Max Horiz 53=-145 (LC 8)

Max Uplift All uplift 100 (lb) or less at joint(s) 28, 30, 31, 32, 33, 34, 36, 38, 39, 40, 41, 42, 44, 45, 46, 47, 48, 49, 50 except 29=-118 (LC 11), 51=-177 (LC 10), 52=-112 (LC 8)

Max Grav All reactions 250 (lb) or less at joint(s) 28, 29, 30, 31, 32, 33, 34, 36, 37, 38, 39, 40, 41, 42, 43, 44, 45, 46, 47, 48, 49, 50, 51, 52

**FORCES** (lb) - Max. Comp./Max. Ten. - All forces 250 (lb) or less except when shown.

TOP CHORD 8-9=-100/257, 9-10=-119/309, 10-11=-109/273, 11-12=-106/296, 12-13=-106/296, 13-14=-106/296, 14-15=-106/296, 15-16=-106/296, 16-17=-109/274, 17-18=-119/309, 18-19=-100/257

**NOTES**

1) Unbalanced roof live loads have been considered for this design.
2) Wind: ASCE 7-10; Vult=130mph (3-second gust) Vasd=103mph; TCDL=6.0psf; BCDL=6.0psf; h=35ft; Cat. II; Exp B; Enclosed; MWFRS (envelope) exterior zone and C-C Exterior (2) zone; cantilever left and right exposed ; end vertical left and right exposed;C-C for members and forces & MWFRS for reactions shown; Lumber DOL=1.60 plate grip DOL=1.60
3) Truss designed for wind loads in the plane of the truss only.
4) Provide adequate drainage to prevent water ponding.
5) All plates are 2x3 MT20 unless otherwise indicated.
6) Gable requires continuous bottom chord bearing.
7) Truss to be fully sheathed from one face or securely braced against lateral movement (i.e. diagonal web).
8) Gable studs spaced at 2-0-0 oc.
9) This truss has been designed for a 10.0 psf bottom chord live load nonconcurrent with any other live loads.
10) * This truss has been designed for a live load of 20.0psf on the bottom chord in all areas where a rectangle 3-06-00 tall by 2-00-00 wide will fit between the bottom chord and any other members.
11) Bearing at joint(s) 53, 52 considers parallel to grain value using ANSI/TPI 1 angle to grain formula. Building designer should verify capacity of bearing surface.
12) Provide mechanical connection (by others) of truss to bearing plate capable of withstanding 100 lb uplift at joint(s) 28, 47, 42, 40, 39, 41, 44, 45, 46, 48, 49, 50, 38, 36, 34, 33, 32, 31, 30 except (jt=lb) 52=112, 51=176, 29=118.
13) Beveled plate or shim required to provide full bearing surface with truss chord at joint(s) 47, 43, 44, 45, 46, 48, 49, 50, 51.
14) This truss is designed in accordance with the 2015 International Residential Code sections R502.11.1 and R802.10.2 and referenced standard ANSI/TPI 1.
15) Graphical purlin representation does not depict the size or the orientation of the purlin along the top and/or bottom chord.

NORTH CAROLINA PROFESSIONAL SEAL 054919 ENGINEER HUNTER B. DOSS
3/4/2024

| Job | Truss | Truss Type | Qty | Ply | Professional Bldrs / Hanover Craftsman |
|---|---|---|---|---|---|
| 72406537 | B | Truss | 2 | 1 | Job Reference (optional) |



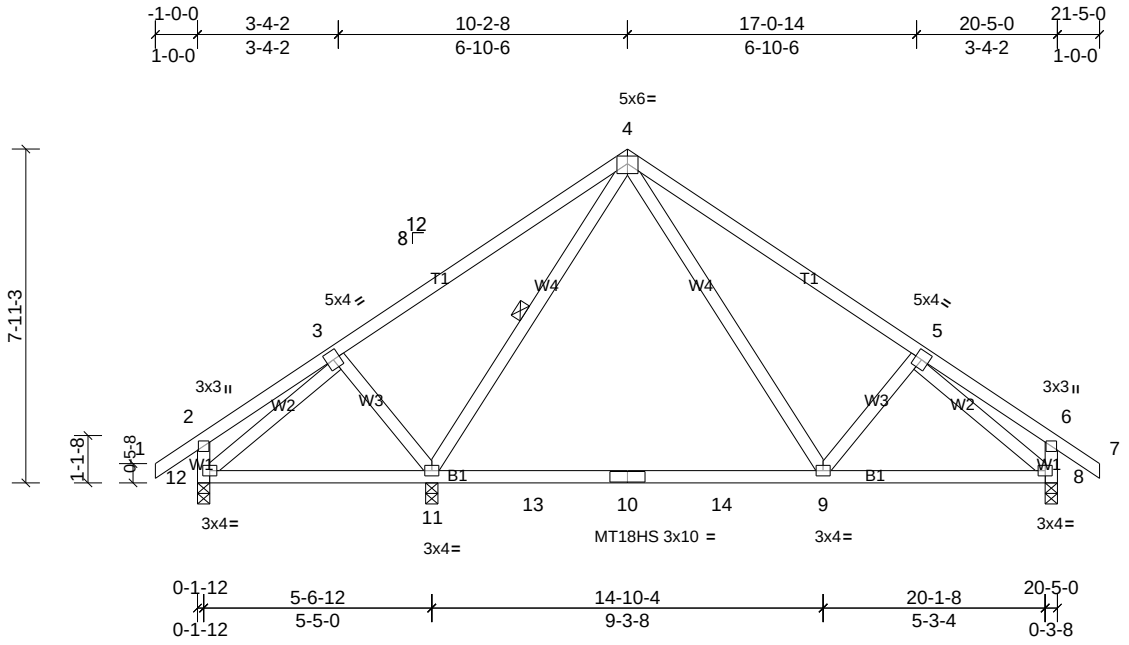


| Loading | (psf) | Spacing | 2-0-0 | CSI | | DEFL | in | (loc) | l/defl | L/d | PLATES | GRIP |
|---|---|---|---|---|---|---|---|---|---|---|---|---|
| TCLL (roof) | 20.0 | Plate Grip DOL | 1.15 | TC | 0.60 | Vert(LL) | -0.27 | 9-11 | >660 | 240 | MT20 | 244/190 |
| TCDL | 10.0 | Lumber DOL | 1.15 | BC | 0.76 | Vert(CT) | -0.42 | 9-11 | >423 | 180 | MT18HS | 244/190 |
| BCLL | 0.0 * | Rep Stress Incr | YES | WB | 0.29 | Horz(CT) | 0.01 | 8 | n/a | n/a | | |
| BCDL | 10.0 | Code | IRC2015/TPI2014 | Matrix-MSH | | | | | | | Weight: 121 lb | FT = 20% |

**LUMBER**

| | |
|---|---|
| TOP CHORD | 2x4 SP No.2 |
| BOT CHORD | 2x4 SP No.2 |
| WEBS | 2x4 SP No.3 |

**BRACING**

| | |
|---|---|
| TOP CHORD | Structural wood sheathing directly applied or 5-8-7 oc purlins, except end verticals. |
| BOT CHORD | Rigid ceiling directly applied or 10-0-0 oc bracing. |
| WEBS | 1 Row at midpt 4-11 |

**REACTIONS** (lb/size) 8=643/0-3-8, (min. 0-1-8), 11=857/0-3-8, (min. 0-1-8), 12=248/0-3-8, (min. 0-1-8)
Max Horiz 12=-227 (LC 8)
Max Uplift 8=-109 (LC 11), 11=-152 (LC 10), 12=-24 (LC 11)
Max Grav 8=645 (LC 18), 11=962 (LC 17), 12=253 (LC 21)

**FORCES** (lb) - Max. Comp./Max. Ten. - All forces 250 (lb) or less except when shown.

| | |
|---|---|
| TOP CHORD | 4-5=-677/206 |
| BOT CHORD | 11-13=-4/271, 10-13=-4/271, 10-14=-4/271, 9-14=-4/271, 8-9=-78/535 |
| WEBS | 4-11=-542/101, 4-9=-93/493, 3-11=-341/257, 3-12=-258/52, 5-8=-825/163 |

**NOTES**

1) Unbalanced roof live loads have been considered for this design.
2) Wind: ASCE 7-10; Vult=130mph (3-second gust) Vasd=103mph; TCDL=6.0psf; BCDL=6.0psf; h=35ft; Cat. II; Exp B; Enclosed; MWFRS (envelope) exterior zone and C-C Exterior (2) zone; cantilever left and right exposed ; end vertical left and right exposed;C-C for members and forces & MWFRS for reactions shown; Lumber DOL=1.60 plate grip DOL=1.60
3) All plates are MT20 plates unless otherwise indicated.
4) This truss has been designed for a 10.0 psf bottom chord live load nonconcurrent with any other live loads.
5) * This truss has been designed for a live load of 20.0psf on the bottom chord in all areas where a rectangle 3-06-00 tall by 2-00-00 wide will fit between the bottom chord and any other members, with BCDL = 10.0psf.
6) Bearing at joint(s) 12, 8 considers parallel to grain value using ANSI/TPI 1 angle to grain formula. Building designer should verify capacity of bearing surface.
7) Provide mechanical connection (by others) of truss to bearing plate capable of withstanding 152 lb uplift at joint 11, 24 lb uplift at joint 12 and 109 lb uplift at joint 8.
8) This truss is designed in accordance with the 2015 International Residential Code sections R502.11.1 and R802.10.2 and referenced standard ANSI/TPI 1.

| Job | Truss | Truss Type | Qty | Ply | Professional Bldrs / Hanover Craftsman |
|---|---|---|---|---|---|
| 72406537 | BG | Truss | 1 | 1 | Job Reference (optional) |



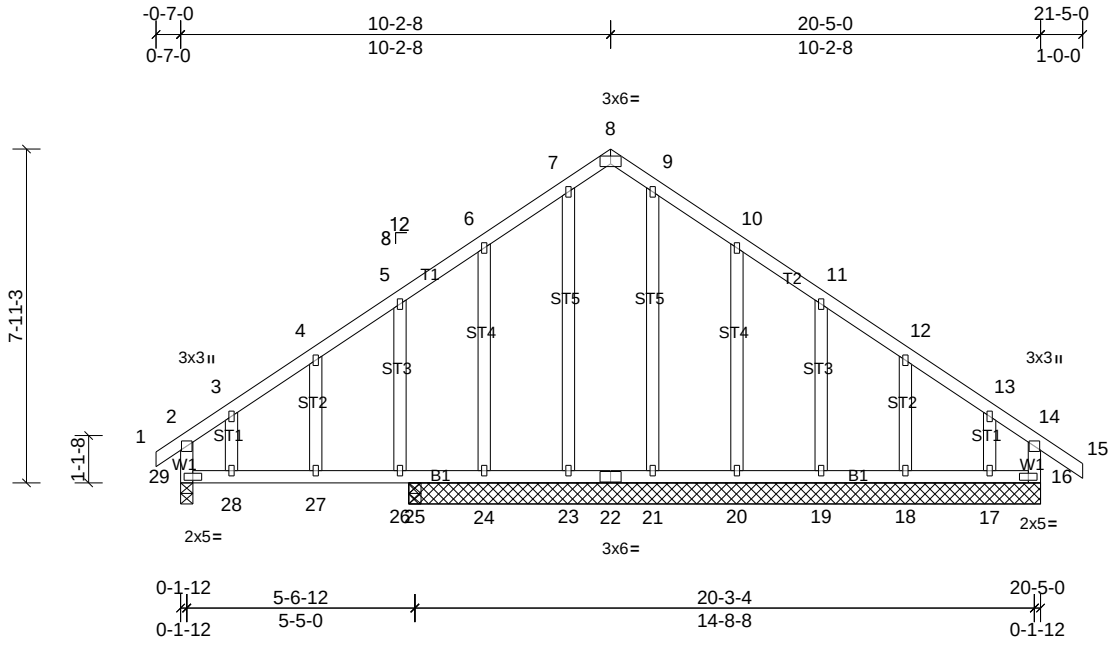


Plate Offsets (X, Y): [8:0-3-0,Edge]

| Loading | (psf) | Spacing | 2-0-0 | CSI | | DEFL | in | (loc) | l/defl | L/d | PLATES | GRIP |
|---|---|---|---|---|---|---|---|---|---|---|---|---|
| TCLL (roof) | 20.0 | Plate Grip DOL | 1.15 | TC | 0.23 | Vert(LL) | 0.05 | 27-28 | >999 | 240 | MT20 | 244/190 |
| TCDL | 10.0 | Lumber DOL | 1.15 | BC | 0.34 | Vert(CT) | -0.05 | 27-28 | >999 | 180 | | |
| BCLL | 0.0 * | Rep Stress Incr | YES | WB | 0.12 | Horz(CT) | 0.01 | 16 | n/a | n/a | | |
| BCDL | 10.0 | Code | IRC2015/TPI2014 | Matrix-MR | | | | | | | Weight: 133 lb | FT = 20% |

**LUMBER**

| | |
|---|---|
| TOP CHORD | 2x4 SP No.2 |
| BOT CHORD | 2x4 SP No.2 |
| WEBS | 2x4 SP No.3 |
| OTHERS | 2x4 SP No.3 |

**BRACING**

| | |
|---|---|
| TOP CHORD | Structural wood sheathing directly applied or 6-0-0 oc purlins, except end verticals. |
| BOT CHORD | Rigid ceiling directly applied or 10-0-0 oc bracing. |

**REACTIONS** All bearings 15-0-0. except 29=0-3-8, 25=0-3-8

(lb) - Max Horiz 29=-225 (LC 8)

Max Uplift All uplift 100 (lb) or less at joint(s) 18, 19, 21, 24, 29 except 16=-160 (LC 7), 17=-185 (LC 6), 20=-101 (LC 11), 25=-223 (LC 10)

Max Grav All reactions 250 (lb) or less at joint(s) 17, 18, 19, 20, 21, 23, 24 except 16=361 (LC 17), 25=489 (LC 17), 29=292 (LC 21)

**FORCES** (lb) - Max. Comp./Max. Ten. - All forces 250 (lb) or less except when shown.

TOP CHORD 6-7=-291/269, 9-10=-292/270, 13-14=-259/155, 14-16=-269/114

WEBS 5-26=-253/149

**NOTES**

1) Unbalanced roof live loads have been considered for this design.
2) Wind: ASCE 7-10; Vult=130mph (3-second gust) Vasd=103mph; TCDL=6.0psf; BCDL=6.0psf; h=35ft; Cat. II; Exp B; Enclosed; MWFRS (envelope) exterior zone and C-C Exterior (2) zone; cantilever left and right exposed ; end vertical left and right exposed;C-C for members and forces & MWFRS for reactions shown; Lumber DOL=1.60 plate grip DOL=1.60
3) Truss designed for wind loads in the plane of the truss only.
4) All plates are 1.5x3 MT20 unless otherwise indicated.
5) Truss to be fully sheathed from one face or securely braced against lateral movement (i.e. diagonal web).
6) Gable studs spaced at 2-0-0 oc.
7) This truss has been designed for a 10.0 psf bottom chord live load nonconcurrent with any other live loads.
8) * This truss has been designed for a live load of 20.0psf on the bottom chord in all areas where a rectangle 3-06-00 tall by 2-00-00 wide will fit between the bottom chord and any other members.
9) Bearing at joint(s) 16, 29 considers parallel to grain value using ANSI/TPI 1 angle to grain formula. Building designer should verify capacity of bearing surface.
10) Provide mechanical connection (by others) of truss to bearing plate capable of withstanding 100 lb uplift at joint(s) 21, 24, 19, 18, 29 except (jt=lb) 16=159, 20=100, 17=184, 25=223.
11) This truss is designed in accordance with the 2015 International Residential Code sections R502.11.1 and R802.10.2 and referenced standard ANSI/TPI 1.

NORTH CAROLINA PROFESSIONAL SEAL 054919 ENGINEER HUNTER B. DOSS
3/4/2024

| Job | Truss | Truss Type | Qty | Ply | Professional Bldrs / Hanover Craftsman |
|---|---|---|---|---|---|
| 72406537 | BL | Truss | 1 | **3** | Job Reference (optional) |



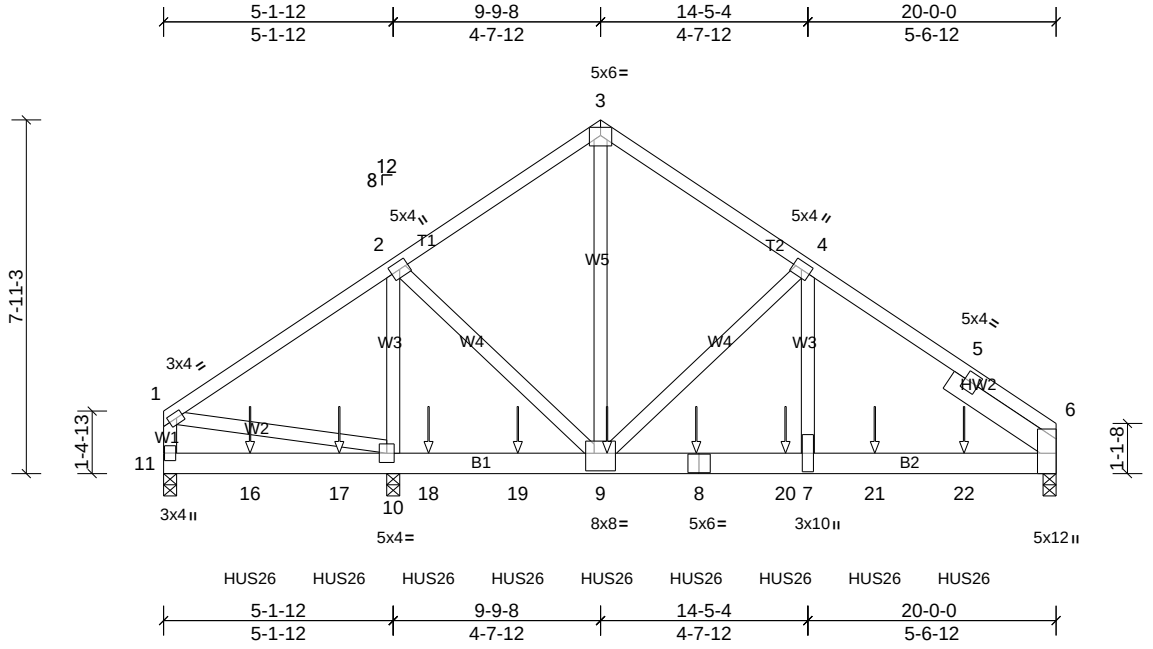


Plate Offsets (X, Y): [1:0-1-12,0-1-8], [9:0-4-0,0-4-12]

| **Loading** | (psf) | **Spacing** | 2-0-0 | **CSI** | | **DEFL** | in | (loc) | l/defl | L/d | **PLATES** | **GRIP** |
|---|---|---|---|---|---|---|---|---|---|---|---|---|
| TCLL (roof) | 20.0 | Plate Grip DOL | 1.15 | TC | 0.60 | Vert(LL) | -0.05 | 7-9 | >999 | 240 | MT20 | 244/190 |
| TCDL | 10.0 | Lumber DOL | 1.15 | BC | 0.97 | Vert(CT) | -0.10 | 7-9 | >999 | 180 | | |
| BCLL | 0.0 * | Rep Stress Incr | NO | WB | 0.61 | Horz(CT) | 0.03 | 6 | n/a | n/a | | |
| BCDL | 10.0 | Code | IRC2015/TPI2014 | Matrix-MSH | | | | | | | Weight: 416 lb | FT = 20% |

**LUMBER**

| | |
|---|---|
| TOP CHORD | 2x4 SP No.2 |
| BOT CHORD | 2x6 SP No.2 |
| WEBS | 2x4 SP No.3 |
| SLIDER | Right 2x6 SP No.2 -- 2-11-0 |

**BRACING**

| | |
|---|---|
| TOP CHORD | Structural wood sheathing directly applied or 6-0-0 oc purlins, except end verticals. |
| BOT CHORD | Rigid ceiling directly applied or 10-0-0 oc bracing, Except: 6-0-0 oc bracing: 9-10. |

**REACTIONS** (lb/size) 6=5258/0-3-8, (min. 0-2-1), 10=10327/0-3-8, (req. 0-4-1), 11=339/0-3-8, (min. 0-1-8)
Max Horiz 11=-201 (LC 6)
Max Uplift 6=-738 (LC 9), 10=-1452 (LC 8), 11=-70 (LC 9)
Max Grav 6=5258 (LC 1), 10=10327 (LC 1), 11=349 (LC 19)

**FORCES** (lb) - Max. Comp./Max. Ten. - All forces 250 (lb) or less except when shown.
TOP CHORD 1-2=-206/1146, 2-3=-2902/527, 3-4=-2859/499, 4-5=-5905/879, 5-6=-3373/413, 1-11=-139/839
BOT CHORD 11-16=-232/507, 16-17=-232/507, 10-17=-232/507, 10-18=-913/240, 18-19=-913/240, 9-19=-913/240, 8-9=-629/4811, 8-20=-629/4811, 7-20=-629/4811, 7-21=-629/4811, 21-22=-629/4811, 6-22=-629/4811
WEBS 3-9=-470/2840, 4-7=-498/3910, 2-10=-5537/831, 4-9=-3418/613, 2-9=-562/4452, 1-10=-1302/263

**NOTES**

1) 3-ply truss to be connected together with 10d (0.131"x3") nails as follows:
Top chords connected as follows: 2x4 - 1 row at 0-9-0 oc.
Bottom chords connected as follows: 2x6 - 2 rows staggered at 0-4-0 oc.
Web connected as follows: 2x4 - 1 row at 0-9-0 oc, Except member 3-9 2x4 - 1 row at 0-8-0 oc.
2) All loads are considered equally applied to all plies, except if noted as front (F) or back (B) face in the LOAD CASE(S) section. Ply to ply connections have been provided to distribute only loads noted as (F) or (B), unless otherwise indicated.
3) Unbalanced roof live loads have been considered for this design.
4) Wind: ASCE 7-10; Vult=130mph (3-second gust) Vasd=103mph; TCDL=6.0psf; BCDL=6.0psf; h=35ft; Cat. II; Exp B; Enclosed; MWFRS (envelope) exterior zone; cantilever left and right exposed ; end vertical left and right exposed; Lumber DOL=1.60 plate grip DOL=1.60
5) This truss has been designed for a 10.0 psf bottom chord live load nonconcurrent with any other live loads.
6) * This truss has been designed for a live load of 20.0psf on the bottom chord in all areas where a rectangle 3-06-00 tall by 2-00-00 wide will fit between the bottom chord and any other members.
7) WARNING: Required bearing size at joint(s) 10 greater than input bearing size.
8) Provide mechanical connection (by others) of truss to bearing plate capable of withstanding 738 lb uplift at joint 6, 70 lb uplift at joint 11 and 1452 lb uplift at joint 10.
9) This truss is designed in accordance with the 2015 International Residential Code sections R502.11.1 and R802.10.2 and referenced standard ANSI/TPI 1.
10) Use Simpson Strong-Tie HUS26 (14-10d Girder, 4-10d Truss) or equivalent spaced at 2-0-0 oc max. starting at 2-4-4 from the left end to 18-4-4 to connect truss(es) to back face of bottom chord.
11) Fill all nail holes where hanger is in contact with lumber.

**LOAD CASE(S)** Standard
1) Dead + Roof Live (balanced): Lumber Increase=1.15, Plate Increase=1.15
Uniform Loads (lb/ft)
Vert: 1-3=-60, 3-6=-60, 11-12=-20
Concentrated Loads (lb)
Vert: 8=-1593 (B), 9=-1593 (B), 16=-1592 (B), 17=-1592 (B), 18=-1592 (B), 19=-1592 (B), 20=-1593 (B), 21=-1593 (B), 22=-1593 (B)

NORTH CAROLINA PROFESSIONAL SEAL 054919 ENGINEER HUNTER B. DOSS
3/4/2024

| Job | Truss | Truss Type | Qty | Ply | Professional Bldrs / Hanover Craftsman |
|---|---|---|---|---|---|
| 72406537 | D | Truss | 5 | 1 | Job Reference (optional) |



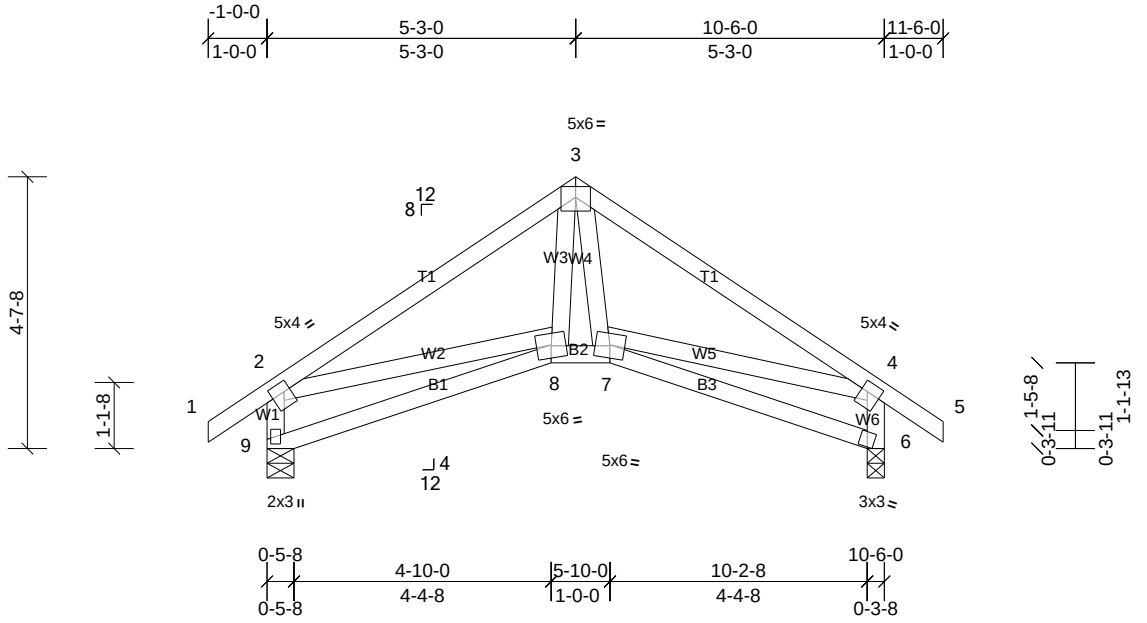


Plate Offsets (X, Y): [2:0-1-4,0-2-0], [4:0-1-4,0-2-0], [6:0-1-8,0-1-7]

| Loading | (psf) | Spacing | 2-0-0 | CSI | | DEFL | in | (loc) | l/defl | L/d | PLATES | GRIP |
|---|---|---|---|---|---|---|---|---|---|---|---|---|
| TCLL (roof) | 20.0 | Plate Grip DOL | 1.15 | TC | 0.39 | Vert(LL) | -0.02 | 8-9 | >999 | 240 | MT20 | 244/190 |
| TCDL | 10.0 | Lumber DOL | 1.15 | BC | 0.19 | Vert(CT) | -0.04 | 8-9 | >999 | 180 | | |
| BCLL | 0.0 * | Rep Stress Incr | YES | WB | 0.12 | Horz(CT) | 0.01 | 6 | n/a | n/a | | |
| BCDL | 10.0 | Code | IRC2015/TPI2014 | Matrix-MSH | | | | | | | Weight: 63 lb | FT = 20% |

**LUMBER**

| | |
|---|---|
| TOP CHORD | 2x4 SP No.2 |
| BOT CHORD | 2x4 SP No.2 |
| WEBS | 2x4 SP No.3 |

**BRACING**

| | |
|---|---|
| TOP CHORD | Structural wood sheathing directly applied or 6-0-0 oc purlins, except end verticals. |
| BOT CHORD | Rigid ceiling directly applied or 10-0-0 oc bracing. |

**REACTIONS** (lb/size) 6=477/0-3-8, (min. 0-1-8), 9=477/0-5-8, (min. 0-1-8)
Max Horiz 9=-145 (LC 8)
Max Uplift 6=-73 (LC 11), 9=-73 (LC 10)

**FORCES** (lb) - Max. Comp./Max. Ten. - All forces 250 (lb) or less except when shown.

| | |
|---|---|
| TOP CHORD | 2-3=-572/64, 3-4=-581/70, 2-9=-468/179, 4-6=-472/179 |
| BOT CHORD | 8-9=-162/263, 7-8=0/415 |
| WEBS | 2-8=0/280, 4-7=-39/349 |

**NOTES**

1) Unbalanced roof live loads have been considered for this design.
2) Wind: ASCE 7-10; Vult=130mph (3-second gust) Vasd=103mph; TCDL=6.0psf; BCDL=6.0psf; h=35ft; Cat. II; Exp B; Enclosed; MWFRS (envelope) exterior zone and C-C Exterior (2) zone; cantilever left and right exposed ; end vertical left and right exposed;C-C for members and forces & MWFRS for reactions shown; Lumber DOL=1.60 plate grip DOL=1.60
3) This truss has been designed for a 10.0 psf bottom chord live load nonconcurrent with any other live loads.
4) * This truss has been designed for a live load of 20.0psf on the bottom chord in all areas where a rectangle 3-06-00 tall by 2-00-00 wide will fit between the bottom chord and any other members.
5) Bearing at joint(s) 9, 6 considers parallel to grain value using ANSI/TPI 1 angle to grain formula. Building designer should verify capacity of bearing surface.
6) Provide mechanical connection (by others) of truss to bearing plate capable of withstanding 73 lb uplift at joint 9 and 73 lb uplift at joint 6.
7) This truss is designed in accordance with the 2015 International Residential Code sections R502.11.1 and R802.10.2 and referenced standard ANSI/TPI 1.

| Job | Truss | Truss Type | Qty | Ply | Professional Bldrs / Hanover Craftsman |
|---|---|---|---|---|---|
| 72406537 | DG | Truss | 1 | 1 | Job Reference (optional) |



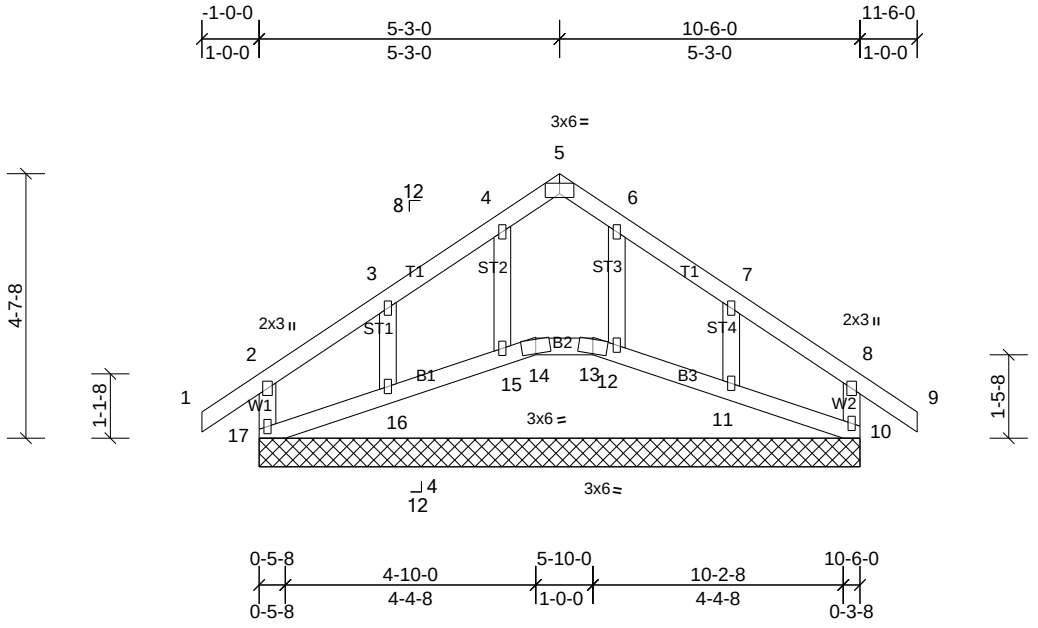


Plate Offsets (X, Y): [5:0-3-0,Edge]

| Loading | (psf) | Spacing | 2-0-0 | CSI | | DEFL | in | (loc) | l/defl | L/d | PLATES | GRIP |
|---|---|---|---|---|---|---|---|---|---|---|---|---|
| TCLL (roof) | 20.0 | Plate Grip DOL | 1.15 | TC | 0.13 | Vert(LL) | n/a | - | n/a | 999 | MT20 | 244/190 |
| TCDL | 10.0 | Lumber DOL | 1.15 | BC | 0.06 | Vert(CT) | n/a | - | n/a | 999 | | |
| BCLL | 0.0 * | Rep Stress Incr | YES | WB | 0.04 | Horz(CT) | 0.00 | 10 | n/a | n/a | | |
| BCDL | 10.0 | Code | IRC2015/TPI2014 | Matrix-MR | | | | | | | Weight: 53 lb | FT = 20% |

**LUMBER**

| | |
|---|---|
| TOP CHORD | 2x4 SP No.2 |
| BOT CHORD | 2x4 SP No.2 |
| WEBS | 2x4 SP No.3 |
| OTHERS | 2x4 SP No.3 |

**BRACING**

| | |
|---|---|
| TOP CHORD | Structural wood sheathing directly applied or 6-0-0 oc purlins, except end verticals. |
| BOT CHORD | Rigid ceiling directly applied or 6-0-0 oc bracing. |

**REACTIONS** All bearings 10-6-0.

(lb) - Max Horiz 17=-145 (LC 8)

Max Uplift All uplift 100 (lb) or less at joint(s) 10, 13, 14, 17 except 11=-122 (LC 11), 16=-124 (LC 10)

Max Grav All reactions 250 (lb) or less at joint(s) 10, 11, 12, 13, 14, 15, 16, 17

**FORCES** (lb) - Max. Comp./Max. Ten. - All forces 250 (lb) or less except when shown.

**NOTES**

1) Unbalanced roof live loads have been considered for this design.
2) Wind: ASCE 7-10; Vult=130mph (3-second gust) Vasd=103mph; TCDL=6.0psf; BCDL=6.0psf; h=35ft; Cat. II; Exp B; Enclosed; MWFRS (envelope) exterior zone and C-C Exterior (2) zone; cantilever left and right exposed ; end vertical left and right exposed;C-C for members and forces & MWFRS for reactions shown; Lumber DOL=1.60 plate grip DOL=1.60
3) Truss designed for wind loads in the plane of the truss only.
4) All plates are 1.5x3 MT20 unless otherwise indicated.
5) Gable requires continuous bottom chord bearing.
6) Truss to be fully sheathed from one face or securely braced against lateral movement (i.e. diagonal web).
7) Gable studs spaced at 2-0-0 oc.
8) This truss has been designed for a 10.0 psf bottom chord live load nonconcurrent with any other live loads.
9) * This truss has been designed for a live load of 20.0psf on the bottom chord in all areas where a rectangle 3-06-00 tall by 2-00-00 wide will fit between the bottom chord and any other members.
10) Provide mechanical connection (by others) of truss to bearing plate capable of withstanding 100 lb uplift at joint(s) 17, 10, 14, 13 except (jt=lb) 16=123, 11=122.
11) Beveled plate or shim required to provide full bearing surface with truss chord at joint(s) 14, 13, 15, 12, 16, 11.
12) This truss is designed in accordance with the 2015 International Residential Code sections R502.11.1 and R802.10.2 and referenced standard ANSI/TPI 1.

NORTH CAROLINA PROFESSIONAL SEAL 054919 ENGINEER HUNTER B. DOSS
3/4/2024

| Job | Truss | Truss Type | Qty | Ply | Professional Bldrs / Hanover Craftsman |
|---|---|---|---|---|---|
| 72406537 | DL | Truss | 1 | **2** | Job Reference (optional) |



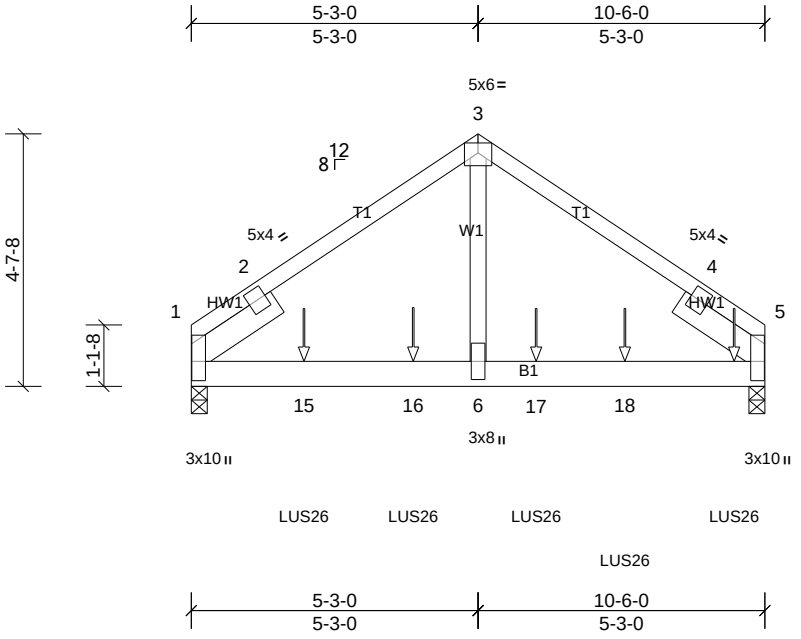


Plate Offsets (X, Y): [1:0-4-4,0-0-2], [5:0-8-1,0-0-2]

| **Loading** | (psf) | **Spacing** | 2-0-0 | **CSI** | | **DEFL** | in | (loc) | l/defl | L/d | **PLATES** | **GRIP** |
|---|---|---|---|---|---|---|---|---|---|---|---|---|
| TCLL (roof) | 20.0 | Plate Grip DOL | 1.15 | TC | 0.17 | Vert(LL) | -0.02 | 6-13 | >999 | 240 | MT20 | 244/190 |
| TCDL | 10.0 | Lumber DOL | 1.15 | BC | 0.48 | Vert(CT) | -0.04 | 6-13 | >999 | 180 | | |
| BCLL | 0.0 * | Rep Stress Incr | NO | WB | 0.33 | Horz(CT) | 0.01 | 5 | n/a | n/a | | |
| BCDL | 10.0 | Code | IRC2015/TPI2014 | Matrix-MSH | | | | | | | Weight: 117 lb | FT = 20% |

**LUMBER**

| | |
|---|---|
| TOP CHORD | 2x4 SP No.2 |
| BOT CHORD | 2x6 SP No.2 |
| WEBS | 2x4 SP No.3 |
| SLIDER | Left 2x6 SP No.2 -- 1-11-0, Right 2x6 SP No.2 -- 1-11-0 |

**BRACING**

| | |
|---|---|
| TOP CHORD | Structural wood sheathing directly applied or 6-0-0 oc purlins. |
| BOT CHORD | Rigid ceiling directly applied or 10-0-0 oc bracing. |

**REACTIONS** (lb/size) 1=1654/0-3-8, (min. 0-1-8), 5=2070/0-3-8, (min. 0-1-8)
Max Horiz 1=-90 (LC 23)
Max Uplift 1=-257 (LC 8), 5=-330 (LC 9)

**FORCES** (lb) - Max. Comp./Max. Ten. - All forces 250 (lb) or less except when shown.
TOP CHORD 1-2=-1149/246, 2-3=-1712/323, 3-4=-1710/322, 4-5=-1028/207
BOT CHORD 1-15=-209/1362, 15-16=-209/1362, 6-16=-209/1362, 6-17=-209/1362, 17-18=-209/1362, 5-18=-209/1362
WEBS 3-6=-243/1602

**NOTES**

1) 2-ply truss to be connected together with 10d (0.131"x3") nails as follows:
Top chords connected as follows: 2x4 - 1 row at 0-9-0 oc.
Bottom chords connected as follows: 2x6 - 2 rows staggered at 0-9-0 oc.
Web connected as follows: 2x4 - 1 row at 0-9-0 oc.
2) All loads are considered equally applied to all plies, except if noted as front (F) or back (B) face in the LOAD CASE(S) section. Ply to ply connections have been provided to distribute only loads noted as (F) or (B), unless otherwise indicated.
3) Unbalanced roof live loads have been considered for this design.
4) Wind: ASCE 7-10; Vult=130mph (3-second gust) Vasd=103mph; TCDL=6.0psf; BCDL=6.0psf; h=35ft; Cat. II; Exp B; Enclosed; MWFRS (envelope) exterior zone; cantilever left and right exposed ; end vertical left and right exposed; Lumber DOL=1.60 plate grip DOL=1.60
5) This truss has been designed for a 10.0 psf bottom chord live load nonconcurrent with any other live loads.
6) * This truss has been designed for a live load of 20.0psf on the bottom chord in all areas where a rectangle 3-06-00 tall by 2-00-00 wide will fit between the bottom chord and any other members.
7) Provide mechanical connection (by others) of truss to bearing plate capable of withstanding 257 lb uplift at joint 1 and 330 lb uplift at joint 5.
8) This truss is designed in accordance with the 2015 International Residential Code sections R502.11.1 and R802.10.2 and referenced standard ANSI/TPI 1.
9) Use Simpson Strong-Tie LUS26 (4-10d Girder, 3-10d Truss, Single Ply Girder) or equivalent spaced at 2-3-0 oc max. starting at 2-0-12 from the left end to 9-11-4 to connect truss(es) to front face of bottom chord.
10) Fill all nail holes where hanger is in contact with lumber.

**LOAD CASE(S)** Standard

1) Dead + Roof Live (balanced): Lumber Increase=1.15, Plate Increase=1.15
Uniform Loads (lb/ft)
Vert: 1-3=-60, 3-5=-60, 7-11=-20
Concentrated Loads (lb)
Vert: 13=-549 (F), 15=-538 (F), 16=-707 (F), 17=-545 (F), 18=-545 (F)

NORTH CAROLINA PROFESSIONAL SEAL 054919 ENGINEER HUNTER B. DOSS
3/4/2024

| Job | Truss | Truss Type | Qty | Ply | Professional Bldrs / Hanover Craftsman |
|---|---|---|---|---|---|
| 72406537 | E | Truss | 5 | 1 | Job Reference (optional) |



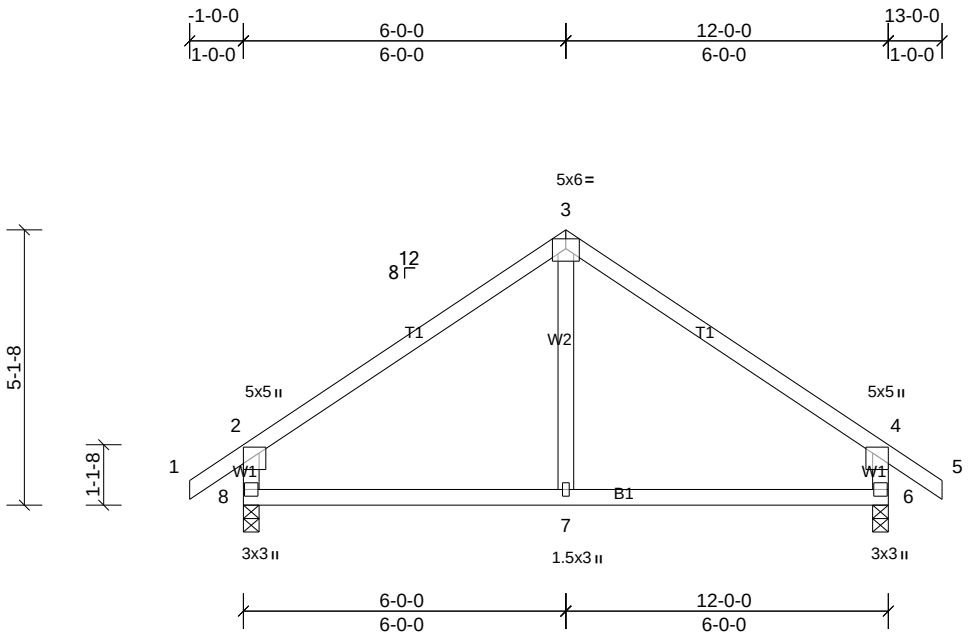


Plate Offsets (X, Y): [2:0-2-8,0-1-12], [4:0-2-8,0-1-12]

| Loading | (psf) | Spacing | 2-0-0 | CSI | | DEFL | in | (loc) | l/defl | L/d | PLATES | GRIP |
|---|---|---|---|---|---|---|---|---|---|---|---|---|
| TCLL (roof) | 20.0 | Plate Grip DOL | 1.15 | TC | 0.72 | Vert(LL) | -0.03 | 7-8 | >999 | 240 | MT20 | 244/190 |
| TCDL | 10.0 | Lumber DOL | 1.15 | BC | 0.25 | Vert(CT) | -0.07 | 7-8 | >999 | 180 | | |
| BCLL | 0.0 * | Rep Stress Incr | YES | WB | 0.09 | Horz(CT) | 0.01 | 6 | n/a | n/a | | |
| BCDL | 10.0 | Code | IRC2015/TPI2014 | Matrix-MR | | | | | | | Weight: 52 lb | FT = 20% |

**LUMBER**

| | |
|---|---|
| TOP CHORD | 2x4 SP No.2 |
| BOT CHORD | 2x4 SP No.2 |
| WEBS | 2x4 SP No.3 |

**BRACING**

| | |
|---|---|
| TOP CHORD | Structural wood sheathing directly applied or 6-0-0 oc purlins, except end verticals. |
| BOT CHORD | Rigid ceiling directly applied or 10-0-0 oc bracing. |

**REACTIONS** (lb/size) 6=537/0-3-8, (min. 0-1-8), 8=537/0-3-8, (min. 0-1-8)
Max Horiz 8=-155 (LC 8)
Max Uplift 6=-81 (LC 11), 8=-81 (LC 10)

**FORCES** (lb) - Max. Comp./Max. Ten. - All forces 250 (lb) or less except when shown.
TOP CHORD 2-3=-472/129, 3-4=-472/129, 2-8=-471/195, 4-6=-471/195
BOT CHORD 7-8=0/321, 6-7=0/321

**NOTES**

1) Unbalanced roof live loads have been considered for this design.
2) Wind: ASCE 7-10; Vult=130mph (3-second gust) Vasd=103mph; TCDL=6.0psf; BCDL=6.0psf; h=35ft; Cat. II; Exp B; Enclosed; MWFRS (envelope) exterior zone and C-C Exterior (2) zone; cantilever left and right exposed ; end vertical left and right exposed;C-C for members and forces & MWFRS for reactions shown; Lumber DOL=1.60 plate grip DOL=1.60
3) This truss has been designed for a 10.0 psf bottom chord live load nonconcurrent with any other live loads.
4) * This truss has been designed for a live load of 20.0psf on the bottom chord in all areas where a rectangle 3-06-00 tall by 2-00-00 wide will fit between the bottom chord and any other members.
5) Provide mechanical connection (by others) of truss to bearing plate capable of withstanding 81 lb uplift at joint 8 and 81 lb uplift at joint 6.
6) This truss is designed in accordance with the 2015 International Residential Code sections R502.11.1 and R802.10.2 and referenced standard ANSI/TPI 1.

| Job | Truss | Truss Type | Qty | Ply | Professional Bldrs / Hanover Craftsman |
|---|---|---|---|---|---|
| 72406537 | EG | Truss | 1 | 1 | Job Reference (optional) |



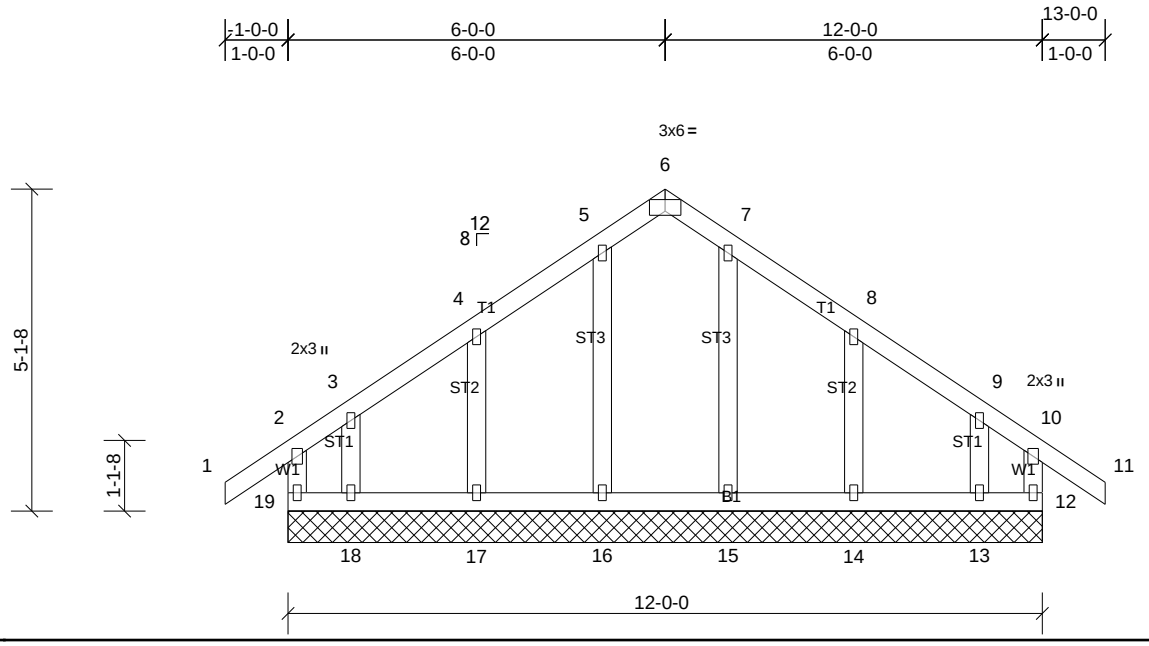


Plate Offsets (X, Y): [6:0-3-0,Edge]

| Loading | (psf) | Spacing | 2-0-0 | CSI | | DEFL | in | (loc) | l/defl | L/d | PLATES | GRIP |
|---|---|---|---|---|---|---|---|---|---|---|---|---|
| TCLL (roof) | 20.0 | Plate Grip DOL | 1.15 | TC | 0.13 | Vert(LL) | n/a | - | n/a | 999 | MT20 | 244/190 |
| TCDL | 10.0 | Lumber DOL | 1.15 | BC | 0.06 | Vert(CT) | n/a | - | n/a | 999 | | |
| BCLL | 0.0 * | Rep Stress Incr | YES | WB | 0.04 | Horz(CT) | 0.00 | 12 | n/a | n/a | | |
| BCDL | 10.0 | Code | IRC2015/TPI2014 | Matrix-MR | | | | | | | Weight: 68 lb | FT = 20% |

**LUMBER**

| | |
|---|---|
| TOP CHORD | 2x4 SP No.2 |
| BOT CHORD | 2x4 SP No.2 |
| WEBS | 2x4 SP No.3 |
| OTHERS | 2x4 SP No.3 |

**BRACING**

| | |
|---|---|
| TOP CHORD | Structural wood sheathing directly applied or 6-0-0 oc purlins, except end verticals. |
| BOT CHORD | Rigid ceiling directly applied or 6-0-0 oc bracing. |

**REACTIONS** All bearings 12-0-0.

(lb) - Max Horiz 19=-155 (LC 8)

Max Uplift All uplift 100 (lb) or less at joint(s) 12, 14, 17, 19 except 13=-118 (LC 11), 18=-122 (LC 10)

Max Grav All reactions 250 (lb) or less at joint(s) 12, 13, 14, 15, 16, 17, 18, 19

**FORCES** (lb) - Max. Comp./Max. Ten. - All forces 250 (lb) or less except when shown.

**NOTES**

1) Unbalanced roof live loads have been considered for this design.
2) Wind: ASCE 7-10; Vult=130mph (3-second gust) Vasd=103mph; TCDL=6.0psf; BCDL=6.0psf; h=35ft; Cat. II; Exp B; Enclosed; MWFRS (envelope) exterior zone and C-C Exterior (2) zone; cantilever left and right exposed ; end vertical left and right exposed;C-C for members and forces & MWFRS for reactions shown; Lumber DOL=1.60 plate grip DOL=1.60
3) Truss designed for wind loads in the plane of the truss only.
4) All plates are 1.5x3 MT20 unless otherwise indicated.
5) Gable requires continuous bottom chord bearing.
6) Truss to be fully sheathed from one face or securely braced against lateral movement (i.e. diagonal web).
7) Gable studs spaced at 2-0-0 oc.
8) This truss has been designed for a 10.0 psf bottom chord live load nonconcurrent with any other live loads.
9) * This truss has been designed for a live load of 20.0psf on the bottom chord in all areas where a rectangle 3-06-00 tall by 2-00-00 wide will fit between the bottom chord and any other members.
10) Provide mechanical connection (by others) of truss to bearing plate capable of withstanding 100 lb uplift at joint(s) 19, 12, 17, 14 except (jt=lb) 18=122, 13=117.
11) This truss is designed in accordance with the 2015 International Residential Code sections R502.11.1 and R802.10.2 and referenced standard ANSI/TPI 1.

| Job | Truss | Truss Type | Qty | Ply | Professional Bldrs / Hanover Craftsman |
|---|---|---|---|---|---|
| 72406537 | EL | Truss | 1 | **3** | Job Reference (optional) |



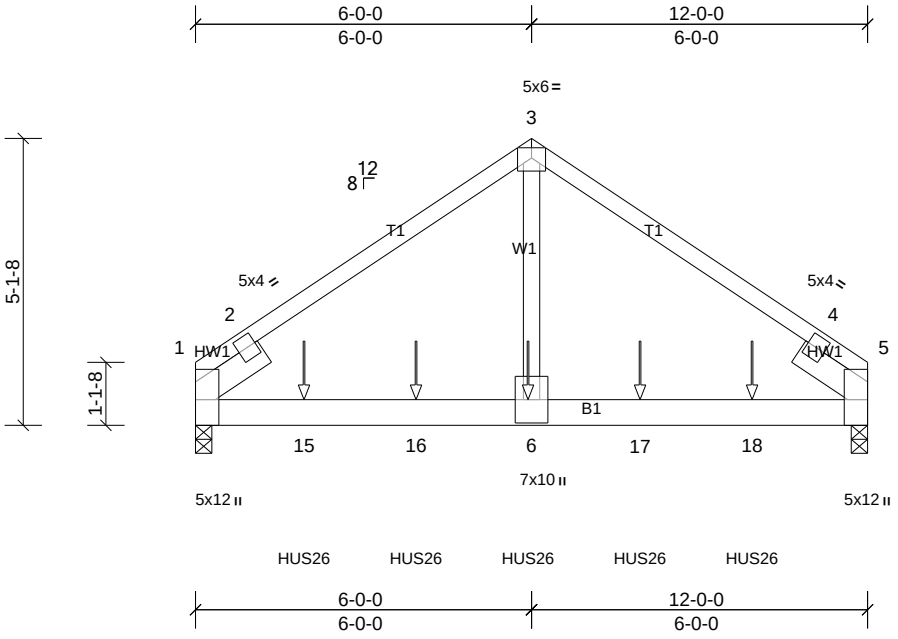


| Loading | (psf) | Spacing | 2-0-0 | CSI | | DEFL | in | (loc) | l/defl | L/d | PLATES | GRIP |
|---|---|---|---|---|---|---|---|---|---|---|---|---|
| TCLL (roof) | 20.0 | Plate Grip DOL | 1.15 | TC | 0.42 | Vert(LL) | -0.05 | 6-13 | >999 | 240 | MT20 | 244/190 |
| TCDL | 10.0 | Lumber DOL | 1.15 | BC | 0.89 | Vert(CT) | -0.10 | 6-13 | >999 | 180 | | |
| BCLL | 0.0 * | Rep Stress Incr | NO | WB | 0.66 | Horz(CT) | 0.02 | 5 | n/a | n/a | | |
| BCDL | 10.0 | Code | IRC2015/TPI2014 | Matrix-MSH | | | | | | | Weight: 190 lb | FT = 20% |

**LUMBER**

| | |
|---|---|
| TOP CHORD | 2x4 SP No.2 |
| BOT CHORD | 2x6 SP No.2 |
| WEBS | 2x4 SP No.3 |
| SLIDER | Left 2x6 SP No.2 -- 1-6-0, Right 2x6 SP No.2 -- 1-6-0 |

**BRACING**

| | |
|---|---|
| TOP CHORD | Structural wood sheathing directly applied or 6-0-0 oc purlins. |
| BOT CHORD | Rigid ceiling directly applied or 10-0-0 oc bracing. |

**REACTIONS** (lb/size) 1=4497/0-3-8, (min. 0-1-12), 5=4430/0-3-8, (min. 0-1-12)
Max Horiz 1=-103 (LC 4)
Max Uplift 1=-632 (LC 8), 5=-608 (LC 9)

**FORCES** (lb) - Max. Comp./Max. Ten. - All forces 250 (lb) or less except when shown.

| | |
|---|---|
| TOP CHORD | 1-2=-3684/591, 2-3=-4610/695, 3-4=-4611/696, 4-5=-3167/485 |
| BOT CHORD | 1-15=-511/3746, 15-16=-511/3746, 6-16=-511/3746, 6-17=-511/3746, 17-18=-511/3746, 5-18=-511/3746 |
| WEBS | 3-6=-638/4772 |

**NOTES**

1) 3-ply truss to be connected together with 10d (0.131"x3") nails as follows:
Top chords connected as follows: 2x4 - 1 row at 0-9-0 oc.
Bottom chords connected as follows: 2x6 - 2 rows staggered at 0-5-0 oc.
Web connected as follows: 2x4 - 2 rows staggered at 0-9-0 oc.
2) All loads are considered equally applied to all plies, except if noted as front (F) or back (B) face in the LOAD CASE(S) section. Ply to ply connections have been provided to distribute only loads noted as (F) or (B), unless otherwise indicated.
3) Unbalanced roof live loads have been considered for this design.
4) Wind: ASCE 7-10; Vult=130mph (3-second gust) Vasd=103mph; TCDL=6.0psf; BCDL=6.0psf; h=35ft; Cat. II; Exp B; Enclosed; MWFRS (envelope) exterior zone; cantilever left and right exposed ; end vertical left and right exposed; Lumber DOL=1.60 plate grip DOL=1.60
5) This truss has been designed for a 10.0 psf bottom chord live load nonconcurrent with any other live loads.
6) * This truss has been designed for a live load of 20.0psf on the bottom chord in all areas where a rectangle 3-06-00 tall by 2-00-00 wide will fit between the bottom chord and any other members.
7) Provide mechanical connection (by others) of truss to bearing plate capable of withstanding 632 lb uplift at joint 1 and 608 lb uplift at joint 5.
8) This truss is designed in accordance with the 2015 International Residential Code sections R502.11.1 and R802.10.2 and referenced standard ANSI/TPI 1.
9) Use Simpson Strong-Tie HUS26 (14-10d Girder, 4-10d Truss) or equivalent spaced at 2-0-0 oc max. starting at 1-11-4 from the left end to 9-11-4 to connect truss(es) to front face of bottom chord.
10) Fill all nail holes where hanger is in contact with lumber.

**LOAD CASE(S)** Standard

1) Dead + Roof Live (balanced): Lumber Increase=1.15, Plate Increase=1.15
Uniform Loads (lb/ft)
Vert: 1-3=-60, 3-5=-60, 7-11=-20
Concentrated Loads (lb)
Vert: 6=-1593 (F), 15=-1593 (F), 16=-1593 (F), 17=-1593 (F), 18=-1593 (F)

NORTH CAROLINA PROFESSIONAL SEAL 054919 ENGINEER HUNTER B. DOSS
3/4/2024

| Job | Truss | Truss Type | Qty | Ply | Professional Bldrs / Hanover Craftsman |
|---|---|---|---|---|---|
| 72406537 | V1 | Truss | 1 | 1 | Job Reference (optional) |



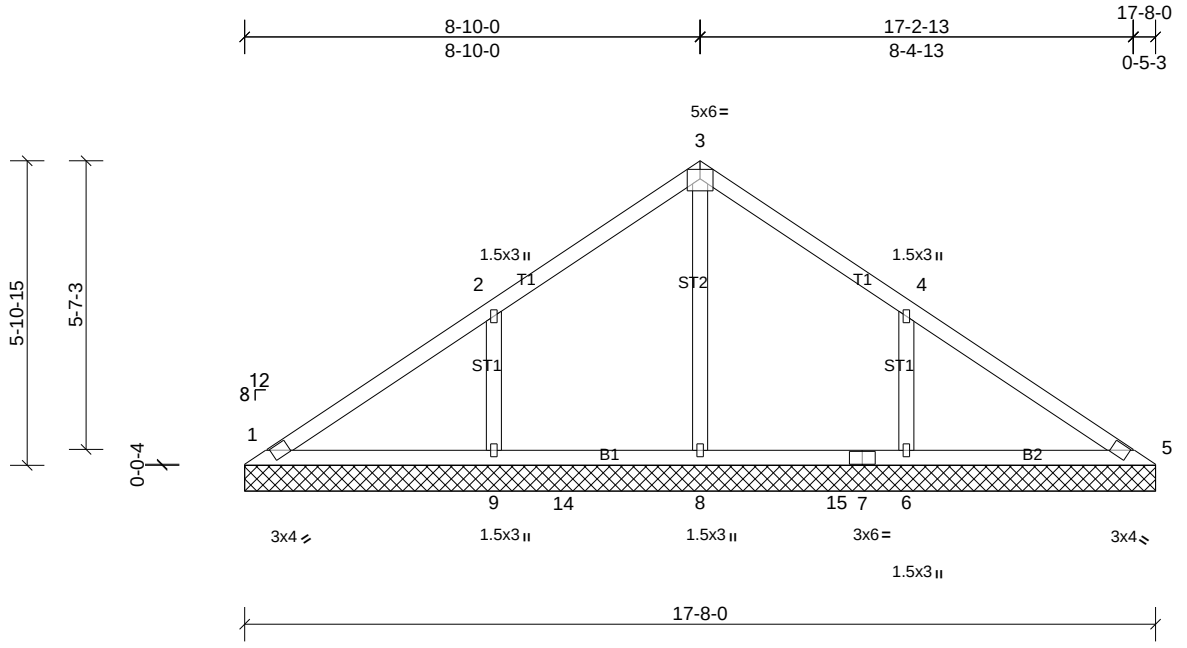


| Loading | (psf) | Spacing | 2-0-0 | CSI | | DEFL | in | (loc) | l/defl | L/d | PLATES | GRIP |
|---|---|---|---|---|---|---|---|---|---|---|---|---|
| TCLL (roof) | 20.0 | Plate Grip DOL | 1.15 | TC | 0.29 | Vert(LL) | n/a | - | n/a | 999 | MT20 | 244/190 |
| TCDL | 10.0 | Lumber DOL | 1.15 | BC | 0.21 | Vert(TL) | n/a | - | n/a | 999 | | |
| BCLL | 0.0 * | Rep Stress Incr | YES | WB | 0.16 | Horiz(TL) | 0.00 | 6 | n/a | n/a | | |
| BCDL | 10.0 | Code | IRC2015/TPI2014 | Matrix-MSH | | | | | | | Weight: 72 lb | FT = 20% |

**LUMBER**

| | |
|---|---|
| TOP CHORD | 2x4 SP No.2 |
| BOT CHORD | 2x4 SP No.2 |
| OTHERS | 2x4 SP No.3 |

**BRACING**

| | |
|---|---|
| TOP CHORD | Structural wood sheathing directly applied or 10-0-0 oc purlins. |
| BOT CHORD | Rigid ceiling directly applied or 6-0-0 oc bracing. |

**REACTIONS** All bearings 17-8-0.

(lb) - Max Horiz 1=-148 (LC 6)
Max Uplift All uplift 100 (lb) or less at joint(s) 1 except 6=-177 (LC 11), 9=-179 (LC 10)
Max Grav All reactions 250 (lb) or less at joint(s) 1, 5 except 6=472 (LC 18), 8=418 (LC 17), 9=455 (LC 17)

**FORCES** (lb) - Max. Comp./Max. Ten. - All forces 250 (lb) or less except when shown.
WEBS 3-8=-269/0, 2-9=-313/211, 4-6=-321/211

**NOTES**

1) Unbalanced roof live loads have been considered for this design.
2) Wind: ASCE 7-10; Vult=130mph (3-second gust) Vasd=103mph; TCDL=6.0psf; BCDL=6.0psf; h=35ft; Cat. II; Exp B; Enclosed; MWFRS (envelope) exterior zone and C-C Exterior (2) zone; cantilever left and right exposed ; end vertical left and right exposed;C-C for members and forces & MWFRS for reactions shown; Lumber DOL=1.60 plate grip DOL=1.60
3) Gable requires continuous bottom chord bearing.
4) This truss has been designed for a 10.0 psf bottom chord live load nonconcurrent with any other live loads.
5) * This truss has been designed for a live load of 20.0psf on the bottom chord in all areas where a rectangle 3-06-00 tall by 2-00-00 wide will fit between the bottom chord and any other members, with BCDL = 10.0psf.
6) Provide mechanical connection (by others) of truss to bearing plate capable of withstanding 100 lb uplift at joint(s) 1 except (jt=lb) 9=178, 6=177.
7) This truss is designed in accordance with the 2015 International Residential Code sections R502.11.1 and R802.10.2 and referenced standard ANSI/TPI 1.

NORTH CAROLINA PROFESSIONAL SEAL 054919 ENGINEER HUNTER B. DOSS
3/4/2024

| Job | Truss | Truss Type | Qty | Ply | Professional Bldrs / Hanover Craftsman |
|---|---|---|---|---|---|
| 72406537 | V2 | Truss | 1 | 1 | Job Reference (optional) |



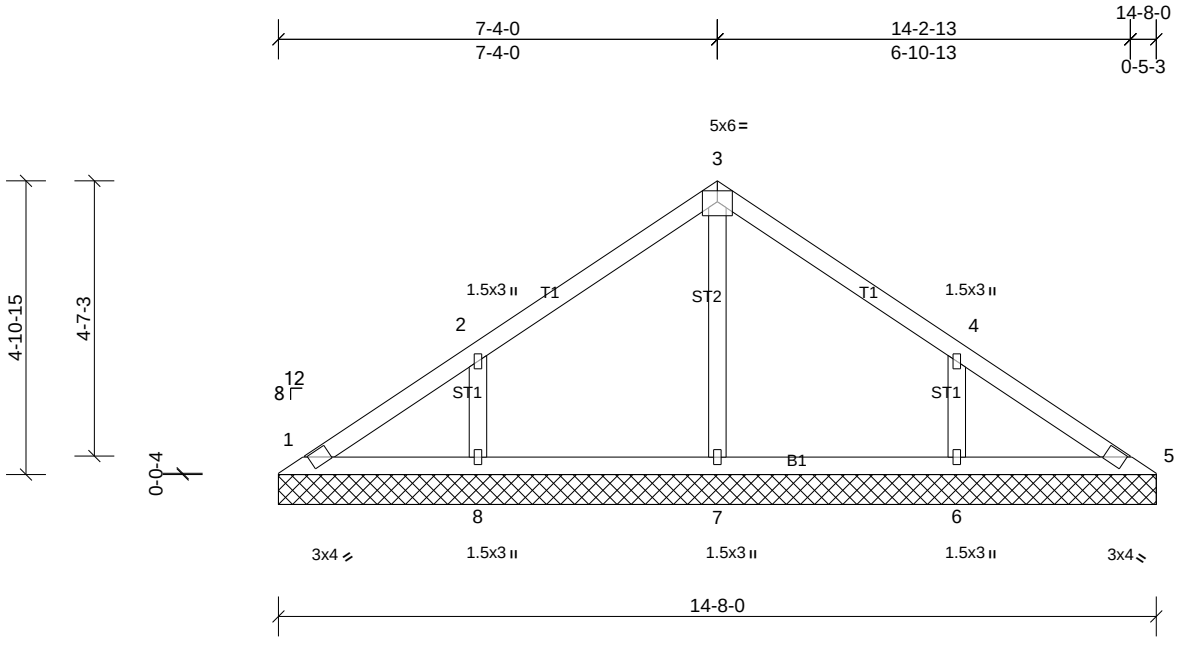


| Loading | (psf) | Spacing | 2-0-0 | CSI | | DEFL | in | (loc) | l/defl | L/d | PLATES | GRIP |
|---|---|---|---|---|---|---|---|---|---|---|---|---|
| TCLL (roof) | 20.0 | Plate Grip DOL | 1.15 | TC | 0.20 | Vert(LL) | n/a | - | n/a | 999 | MT20 | 244/190 |
| TCDL | 10.0 | Lumber DOL | 1.15 | BC | 0.11 | Vert(TL) | n/a | - | n/a | 999 | | |
| BCLL | 0.0 * | Rep Stress Incr | YES | WB | 0.09 | Horiz(TL) | 0.00 | 5 | n/a | n/a | | |
| BCDL | 10.0 | Code | IRC2015/TPI2014 | Matrix-MSH | | | | | | | Weight: 58 lb | FT = 20% |

**LUMBER**

| | |
|---|---|
| TOP CHORD | 2x4 SP No.2 |
| BOT CHORD | 2x4 SP No.2 |
| OTHERS | 2x4 SP No.3 |

**BRACING**

| | |
|---|---|
| TOP CHORD | Structural wood sheathing directly applied or 6-0-0 oc purlins. |
| BOT CHORD | Rigid ceiling directly applied or 6-0-0 oc bracing. |

**REACTIONS** All bearings 14-8-0.

(lb) - Max Horiz 1=-122 (LC 6)
Max Uplift All uplift 100 (lb) or less at joint(s) 1 except 6=-145 (LC 11), 8=-147 (LC 10)
Max Grav All reactions 250 (lb) or less at joint(s) 1, 5 except 6=366 (LC 18), 7=290 (LC 1), 8=350 (LC 17)

**FORCES** (lb) - Max. Comp./Max. Ten. - All forces 250 (lb) or less except when shown.
WEBS 2-8=-266/184, 4-6=-273/182

**NOTES**

1) Unbalanced roof live loads have been considered for this design.
2) Wind: ASCE 7-10; Vult=130mph (3-second gust) Vasd=103mph; TCDL=6.0psf; BCDL=6.0psf; h=35ft; Cat. II; Exp B; Enclosed; MWFRS (envelope) exterior zone and C-C Exterior (2) zone; cantilever left and right exposed ; end vertical left and right exposed;C-C for members and forces & MWFRS for reactions shown; Lumber DOL=1.60 plate grip DOL=1.60
3) Gable requires continuous bottom chord bearing.
4) This truss has been designed for a 10.0 psf bottom chord live load nonconcurrent with any other live loads.
5) * This truss has been designed for a live load of 20.0psf on the bottom chord in all areas where a rectangle 3-06-00 tall by 2-00-00 wide will fit between the bottom chord and any other members.
6) Provide mechanical connection (by others) of truss to bearing plate capable of withstanding 100 lb uplift at joint(s) 1 except (jt=lb) 8=147, 6=144.
7) This truss is designed in accordance with the 2015 International Residential Code sections R502.11.1 and R802.10.2 and referenced standard ANSI/TPI 1.

NORTH CAROLINA PROFESSIONAL SEAL 054919 3/4/2024 ENGINEER HUNTER B. DOSS

| Job | Truss | Truss Type | Qty | Ply | Professional Bldrs / Hanover Craftsman |
|---|---|---|---|---|---|
| 72406537 | V3 | Truss | 1 | 1 | Job Reference (optional) |



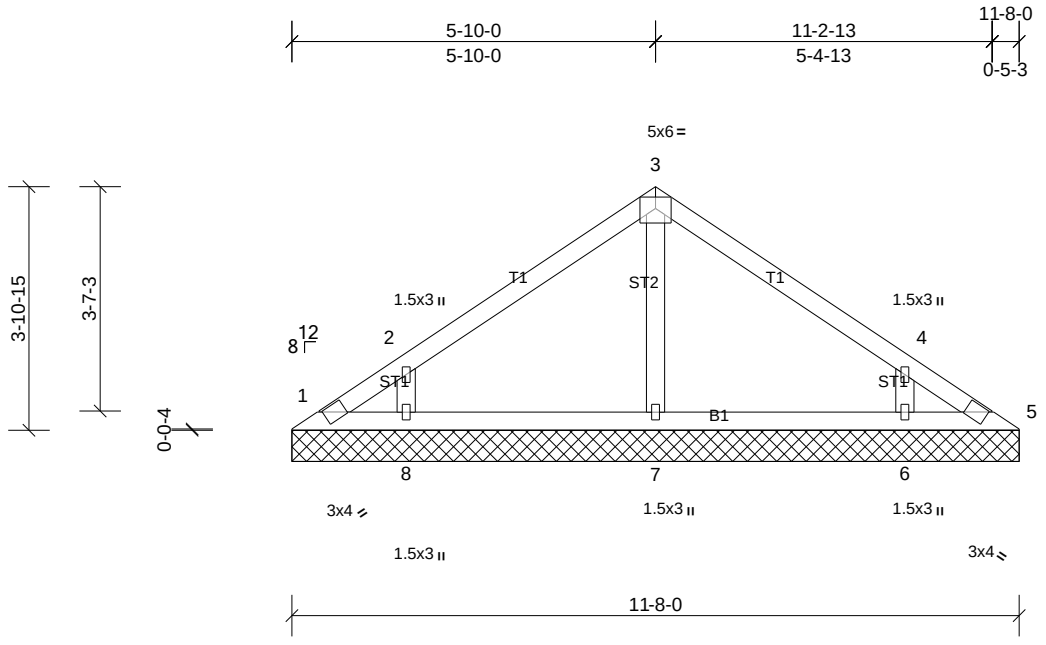


| Loading | (psf) | Spacing | 2-0-0 | CSI | | DEFL | in | (loc) | l/defl | L/d | PLATES | GRIP |
|---|---|---|---|---|---|---|---|---|---|---|---|---|
| TCLL (roof) | 20.0 | Plate Grip DOL | 1.15 | TC | 0.18 | Vert(LL) | n/a | - | n/a | 999 | MT20 | 244/190 |
| TCDL | 10.0 | Lumber DOL | 1.15 | BC | 0.12 | Vert(TL) | n/a | - | n/a | 999 | | |
| BCLL | 0.0 * | Rep Stress Incr | YES | WB | 0.06 | Horiz(TL) | 0.00 | 5 | n/a | n/a | | |
| BCDL | 10.0 | Code | IRC2015/TPI2014 | Matrix-MSH | | | | | | | Weight: 44 lb | FT = 20% |

**LUMBER**

| | |
|---|---|
| TOP CHORD | 2x4 SP No.2 |
| BOT CHORD | 2x4 SP No.2 |
| OTHERS | 2x4 SP No.3 |

**BRACING**

| | |
|---|---|
| TOP CHORD | Structural wood sheathing directly applied or 6-0-0 oc purlins. |
| BOT CHORD | Rigid ceiling directly applied or 10-0-0 oc bracing. |

**REACTIONS** All bearings 11-8-0.

(lb) - Max Horiz 1=-96 (LC 6)
Max Uplift All uplift 100 (lb) or less at joint(s) 1, 5 except 6=-125 (LC 11), 8=-138 (LC 10)
Max Grav All reactions 250 (lb) or less at joint(s) 1, 5 except 6=317 (LC 18), 7=260 (LC 1), 8=317 (LC 17)

**FORCES** (lb) - Max. Comp./Max. Ten. - All forces 250 (lb) or less except when shown.
WEBS 2-8=-277/203, 4-6=-276/196

**NOTES**

1) Unbalanced roof live loads have been considered for this design.
2) Wind: ASCE 7-10; Vult=130mph (3-second gust) Vasd=103mph; TCDL=6.0psf; BCDL=6.0psf; h=35ft; Cat. II; Exp B; Enclosed; MWFRS (envelope) exterior zone and C-C Exterior (2) zone; cantilever left and right exposed ; end vertical left and right exposed;C-C for members and forces & MWFRS for reactions shown; Lumber DOL=1.60 plate grip DOL=1.60
3) Gable requires continuous bottom chord bearing.
4) This truss has been designed for a 10.0 psf bottom chord live load nonconcurrent with any other live loads.
5) * This truss has been designed for a live load of 20.0psf on the bottom chord in all areas where a rectangle 3-06-00 tall by 2-00-00 wide will fit between the bottom chord and any other members.
6) Provide mechanical connection (by others) of truss to bearing plate capable of withstanding 100 lb uplift at joint(s) 1, 5 except (jt=lb) 8=138, 6=125.
7) This truss is designed in accordance with the 2015 International Residential Code sections R502.11.1 and R802.10.2 and referenced standard ANSI/TPI 1.

| Job | Truss | Truss Type | Qty | Ply | Professional Bldrs / Hanover Craftsman |
|---|---|---|---|---|---|
| 72406537 | V4 | Truss | 1 | 1 | Job Reference (optional) |



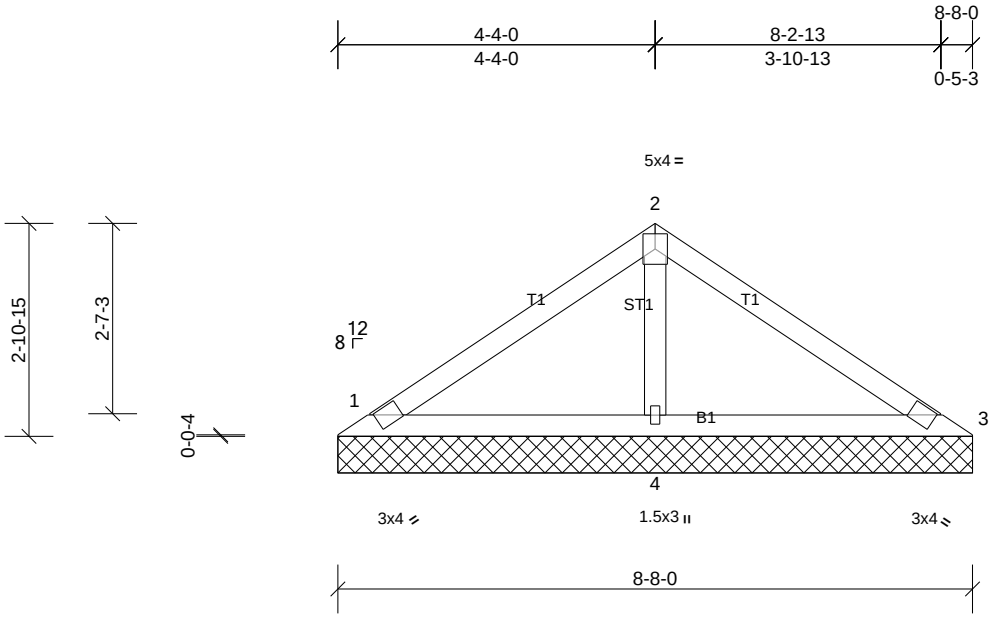


| Loading | (psf) | Spacing | 2-0-0 | CSI | | DEFL | in | (loc) | l/defl | L/d | PLATES | GRIP |
|---|---|---|---|---|---|---|---|---|---|---|---|---|
| TCLL (roof) | 20.0 | Plate Grip DOL | 1.15 | TC | 0.20 | Vert(LL) | n/a | - | n/a | 999 | MT20 | 244/190 |
| TCDL | 10.0 | Lumber DOL | 1.15 | BC | 0.20 | Vert(TL) | n/a | - | n/a | 999 | | |
| BCLL | 0.0 * | Rep Stress Incr | YES | WB | 0.08 | Horiz(TL) | 0.00 | 3 | n/a | n/a | | |
| BCDL | 10.0 | Code | IRC2015/TPI2014 | Matrix-MSH | | | | | | | Weight: 30 lb | FT = 20% |

**LUMBER**

| | |
|---|---|
| TOP CHORD | 2x4 SP No.2 |
| BOT CHORD | 2x4 SP No.2 |
| OTHERS | 2x4 SP No.3 |

**BRACING**

| | |
|---|---|
| TOP CHORD | Structural wood sheathing directly applied or 8-8-0 oc purlins. |
| BOT CHORD | Rigid ceiling directly applied or 6-0-0 oc bracing. |

**REACTIONS** (lb/size) 1=62/8-8-0, (min. 0-1-8), 3=90/8-8-0, (min. 0-1-8), 4=506/8-8-0, (min. 0-1-8)
Max Horiz 1=-70 (LC 6)
Max Uplift 1=-23 (LC 10), 3=-8 (LC 11), 4=-77 (LC 11)
Max Grav 1=113 (LC 21), 3=90 (LC 1), 4=506 (LC 1)

**FORCES** (lb) - Max. Comp./Max. Ten. - All forces 250 (lb) or less except when shown.
WEBS 2-4=-352/126

**NOTES**

1) Unbalanced roof live loads have been considered for this design.
2) Wind: ASCE 7-10; Vult=130mph (3-second gust) Vasd=103mph; TCDL=6.0psf; BCDL=6.0psf; h=35ft; Cat. II; Exp B; Enclosed; MWFRS (envelope) exterior zone and C-C Exterior (2) zone; cantilever left and right exposed ; end vertical left and right exposed;C-C for members and forces & MWFRS for reactions shown; Lumber DOL=1.60 plate grip DOL=1.60
3) Gable requires continuous bottom chord bearing.
4) This truss has been designed for a 10.0 psf bottom chord live load nonconcurrent with any other live loads.
5) * This truss has been designed for a live load of 20.0psf on the bottom chord in all areas where a rectangle 3-06-00 tall by 2-00-00 wide will fit between the bottom chord and any other members.
6) Provide mechanical connection (by others) of truss to bearing plate capable of withstanding 23 lb uplift at joint 1, 8 lb uplift at joint 3 and 77 lb uplift at joint 4.
7) This truss is designed in accordance with the 2015 International Residential Code sections R502.11.1 and R802.10.2 and referenced standard ANSI/TPI 1.

NORTH CAROLINA PROFESSIONAL SEAL 054919 3/4/2024 ENGINEER HUNTER B. DOSS

| Job | Truss | Truss Type | Qty | Ply | Professional Bldrs / Hanover Craftsman |
|---|---|---|---|---|---|
| 72406537 | V5 | Truss | 1 | 1 | Job Reference (optional) |



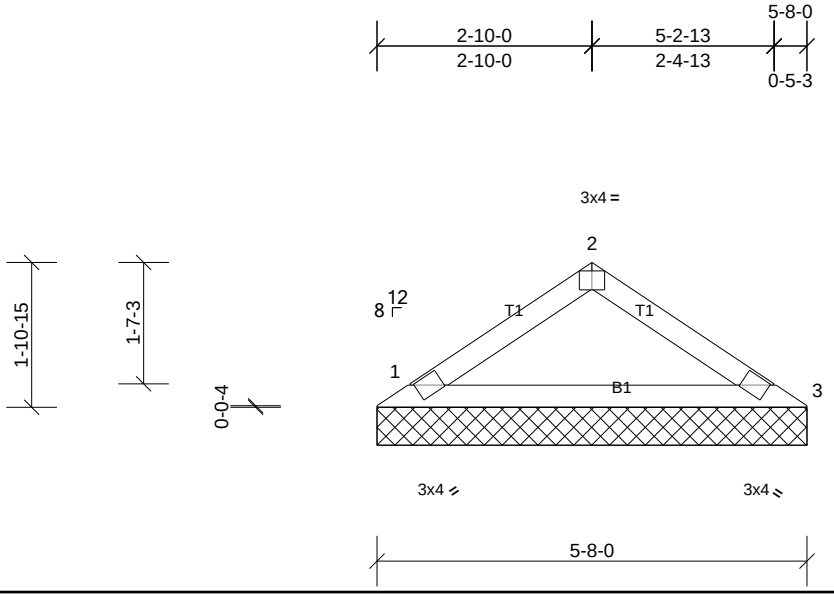


Plate Offsets (X, Y): [2:0-2-0,Edge]

| Loading | (psf) | Spacing | 2-0-0 | CSI | | DEFL | in | (loc) | l/defl | L/d | PLATES | GRIP |
|---|---|---|---|---|---|---|---|---|---|---|---|---|
| TCLL (roof) | 20.0 | Plate Grip DOL | 1.15 | TC | 0.19 | Vert(LL) | n/a | - | n/a | 999 | MT20 | 244/190 |
| TCDL | 10.0 | Lumber DOL | 1.15 | BC | 0.15 | Vert(TL) | n/a | - | n/a | 999 | | |
| BCLL | 0.0 * | Rep Stress Incr | YES | WB | 0.00 | Horiz(TL) | 0.00 | 3 | n/a | n/a | | |
| BCDL | 10.0 | Code | IRC2015/TPI2014 | Matrix-MSH | | | | | | | Weight: 17 lb | FT = 20% |

**LUMBER**

| | |
|---|---|
| TOP CHORD | 2x4 SP No.2 |
| BOT CHORD | 2x4 SP No.2 |

**BRACING**

| | |
|---|---|
| TOP CHORD | Structural wood sheathing directly applied or 5-8-0 oc purlins. |
| BOT CHORD | Rigid ceiling directly applied or 10-0-0 oc bracing. |

**REACTIONS** (lb/size) 1=209/5-8-0, (min. 0-1-8), 3=209/5-8-0, (min. 0-1-8)
Max Horiz 1=-44 (LC 6)
Max Uplift 1=-25 (LC 10), 3=-29 (LC 11)

**FORCES** (lb) - Max. Comp./Max. Ten. - All forces 250 (lb) or less except when shown.

**NOTES**

1) Unbalanced roof live loads have been considered for this design.
2) Wind: ASCE 7-10; Vult=130mph (3-second gust) Vasd=103mph; TCDL=6.0psf; BCDL=6.0psf; h=35ft; Cat. II; Exp B; Enclosed; MWFRS (envelope) exterior zone and C-C Exterior (2) zone; cantilever left and right exposed ; end vertical left and right exposed;C-C for members and forces & MWFRS for reactions shown; Lumber DOL=1.60 plate grip DOL=1.60
3) Gable requires continuous bottom chord bearing.
4) This truss has been designed for a 10.0 psf bottom chord live load nonconcurrent with any other live loads.
5) * This truss has been designed for a live load of 20.0psf on the bottom chord in all areas where a rectangle 3-06-00 tall by 2-00-00 wide will fit between the bottom chord and any other members.
6) Provide mechanical connection (by others) of truss to bearing plate capable of withstanding 25 lb uplift at joint 1 and 29 lb uplift at joint 3.
7) This truss is designed in accordance with the 2015 International Residential Code sections R502.11.1 and R802.10.2 and referenced standard ANSI/TPI 1.

NORTH CAROLINA PROFESSIONAL SEAL 054919 3/4/2024 ENGINEER HUNTER B. DOSS

| Job | Truss | Truss Type | Qty | Ply | Professional Bldrs / Hanover Craftsman |
|---|---|---|---|---|---|
| 72406537 | V6 | Truss | 1 | 1 | Job Reference (optional) |



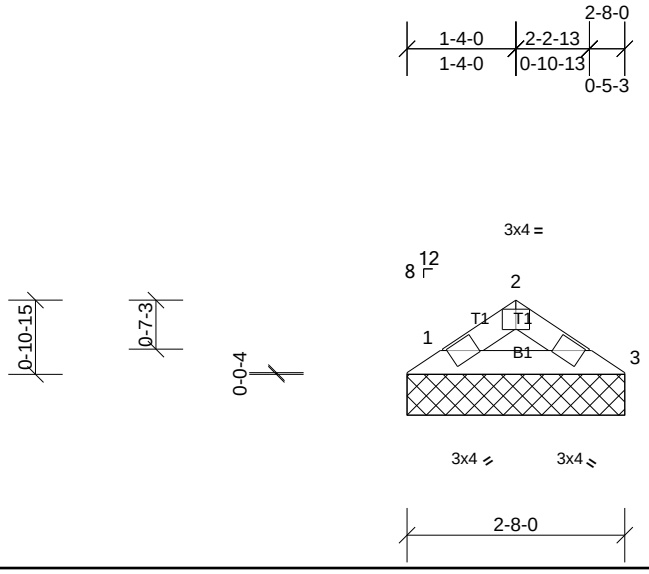


Plate Offsets (X, Y): [2:0-2-0,Edge]

| Loading | (psf) | Spacing | 2-0-0 | CSI | | DEFL | in | (loc) | l/defl | L/d | PLATES | GRIP |
|---|---|---|---|---|---|---|---|---|---|---|---|---|
| TCLL (roof) | 20.0 | Plate Grip DOL | 1.15 | TC | 0.03 | Vert(LL) | n/a | - | n/a | 999 | MT20 | 244/190 |
| TCDL | 10.0 | Lumber DOL | 1.15 | BC | 0.04 | Vert(TL) | n/a | - | n/a | 999 | | |
| BCLL | 0.0 * | Rep Stress Incr | YES | WB | 0.00 | Horiz(TL) | 0.00 | 3 | n/a | n/a | | |
| BCDL | 10.0 | Code | IRC2015/TPI2014 | Matrix-MP | | | | | | | Weight: 7 lb | FT = 20% |

**LUMBER**

TOP CHORD 2x4 SP No.2
BOT CHORD 2x4 SP No.2

**BRACING**

TOP CHORD Structural wood sheathing directly applied or 2-8-0 oc purlins.
BOT CHORD Rigid ceiling directly applied or 10-0-0 oc bracing.

**REACTIONS** (lb/size) 1=89/2-8-0, (min. 0-1-8), 3=89/2-8-0, (min. 0-1-8)
Max Horiz 1=-19 (LC 6)
Max Uplift 1=-10 (LC 10), 3=-14 (LC 11)

**FORCES** (lb) - Max. Comp./Max. Ten. - All forces 250 (lb) or less except when shown.

**NOTES**

1) Unbalanced roof live loads have been considered for this design.
2) Wind: ASCE 7-10; Vult=130mph (3-second gust) Vasd=103mph; TCDL=6.0psf; BCDL=6.0psf; h=35ft; Cat. II; Exp B; Enclosed; MWFRS (envelope) exterior zone and C-C Exterior (2) zone; cantilever left and right exposed ; end vertical left and right exposed;C-C for members and forces & MWFRS for reactions shown; Lumber DOL=1.60 plate grip DOL=1.60
3) Gable requires continuous bottom chord bearing.
4) This truss has been designed for a 10.0 psf bottom chord live load nonconcurrent with any other live loads.
5) * This truss has been designed for a live load of 20.0psf on the bottom chord in all areas where a rectangle 3-06-00 tall by 2-00-00 wide will fit between the bottom chord and any other members.
6) Provide mechanical connection (by others) of truss to bearing plate capable of withstanding 10 lb uplift at joint 1 and 14 lb uplift at joint 3.
7) This truss is designed in accordance with the 2015 International Residential Code sections R502.11.1 and R802.10.2 and referenced standard ANSI/TPI 1.

| Job | Truss | Truss Type | Qty | Ply | Professional Bldrs / Hanover Craftsman |
|---|---|---|---|---|---|
| 72406537 | V10 | Truss | 2 | 1 | Job Reference (optional) |



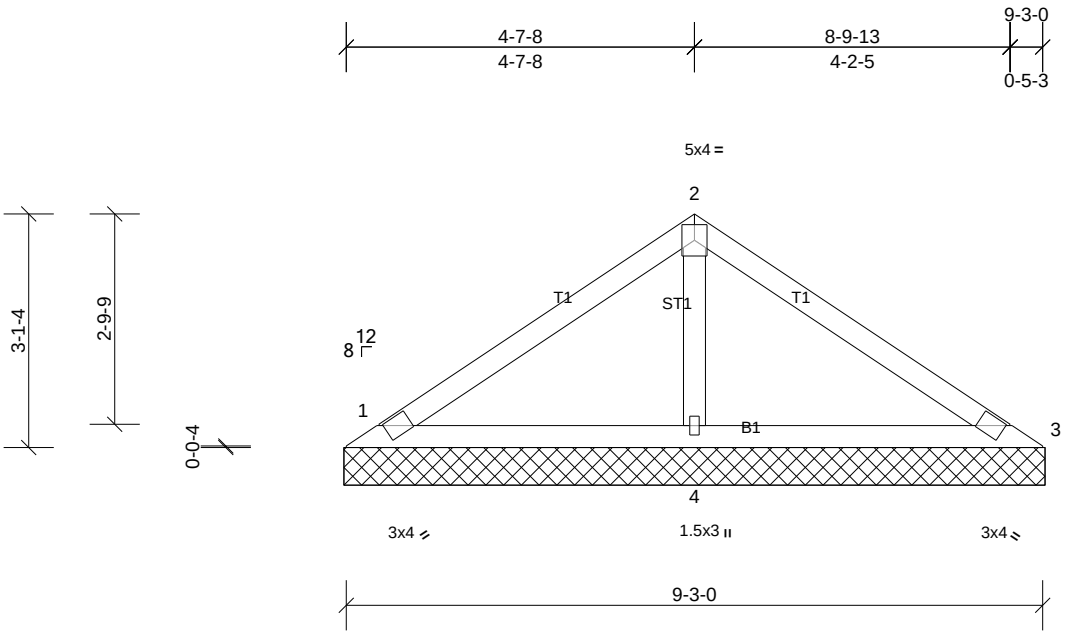


| Loading | (psf) | Spacing | 2-0-0 | CSI | | DEFL | in | (loc) | l/defl | L/d | PLATES | GRIP |
|---|---|---|---|---|---|---|---|---|---|---|---|---|
| TCLL (roof) | 20.0 | Plate Grip DOL | 1.15 | TC | 0.24 | Vert(LL) | n/a | - | n/a | 999 | MT20 | 244/190 |
| TCDL | 10.0 | Lumber DOL | 1.15 | BC | 0.23 | Vert(TL) | n/a | - | n/a | 999 | | |
| BCLL | 0.0 * | Rep Stress Incr | YES | WB | 0.09 | Horiz(TL) | 0.00 | 3 | n/a | n/a | | |
| BCDL | 10.0 | Code | IRC2015/TPI2014 | Matrix-MSH | | | | | | | Weight: 32 lb | FT = 20% |

**LUMBER**

| | |
|---|---|
| TOP CHORD | 2x4 SP No.2 |
| BOT CHORD | 2x4 SP No.2 |
| OTHERS | 2x4 SP No.3 |

**BRACING**

| | |
|---|---|
| TOP CHORD | Structural wood sheathing directly applied or 9-3-0 oc purlins. |
| BOT CHORD | Rigid ceiling directly applied or 6-0-0 oc bracing. |

**REACTIONS** (lb/size) 1=57/9-3-12, (min. 0-1-8), 3=87/9-3-12, (min. 0-1-8), 4=562/9-3-12, (min. 0-1-8)
Max Horiz 1=-75 (LC 6)
Max Uplift 1=-35 (LC 22), 3=-4 (LC 11), 4=-91 (LC 11)
Max Grav 1=118 (LC 21), 3=87 (LC 1), 4=562 (LC 1)

**FORCES** (lb) - Max. Comp./Max. Ten. - All forces 250 (lb) or less except when shown.
WEBS 2-4=-399/142

**NOTES**

1) Unbalanced roof live loads have been considered for this design.
2) Wind: ASCE 7-10; Vult=130mph (3-second gust) Vasd=103mph; TCDL=6.0psf; BCDL=6.0psf; h=35ft; Cat. II; Exp B; Enclosed; MWFRS (envelope) exterior zone and C-C Exterior (2) zone; cantilever left and right exposed ; end vertical left and right exposed;C-C for members and forces & MWFRS for reactions shown; Lumber DOL=1.60 plate grip DOL=1.60
3) Gable requires continuous bottom chord bearing.
4) This truss has been designed for a 10.0 psf bottom chord live load nonconcurrent with any other live loads.
5) * This truss has been designed for a live load of 20.0psf on the bottom chord in all areas where a rectangle 3-06-00 tall by 2-00-00 wide will fit between the bottom chord and any other members.
6) Provide mechanical connection (by others) of truss to bearing plate capable of withstanding 35 lb uplift at joint 1, 4 lb uplift at joint 3 and 91 lb uplift at joint 4.
7) Beveled plate or shim required to provide full bearing surface with truss chord at joint(s) 3.
8) This truss is designed in accordance with the 2015 International Residential Code sections R502.11.1 and R802.10.2 and referenced standard ANSI/TPI 1.

| Job | Truss | Truss Type | Qty | Ply | Professional Bldrs / Hanover Craftsman |
|---|---|---|---|---|---|
| 72406537 | V11 | Truss | 2 | 1 | Job Reference (optional) |



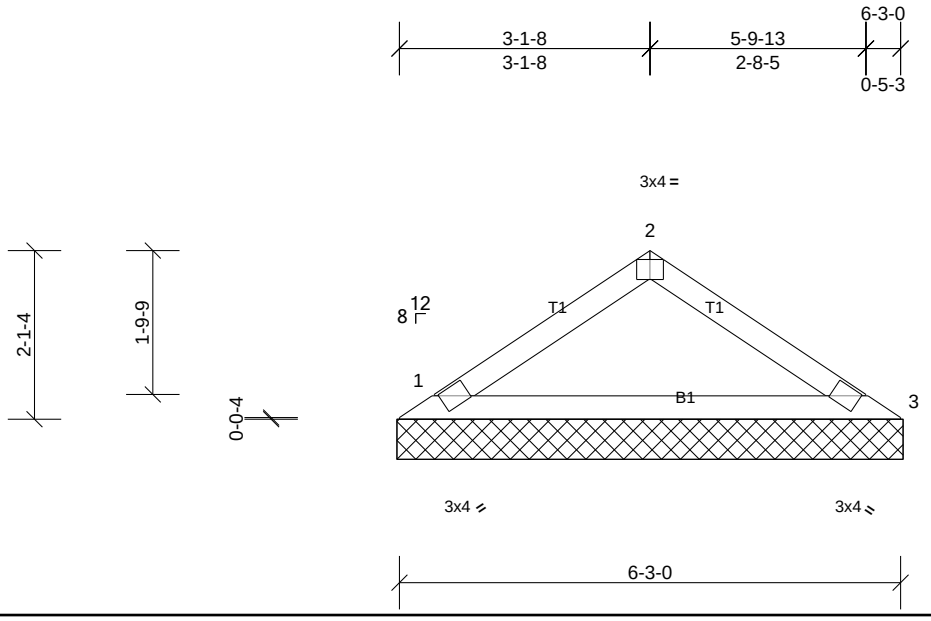


Plate Offsets (X, Y): [2:0-2-0,Edge]

| Loading | (psf) | Spacing | 2-0-0 | CSI | | DEFL | in | (loc) | l/defl | L/d | PLATES | GRIP |
|---|---|---|---|---|---|---|---|---|---|---|---|---|
| TCLL (roof) | 20.0 | Plate Grip DOL | 1.15 | TC | 0.24 | Vert(LL) | n/a | - | n/a | 999 | MT20 | 244/190 |
| TCDL | 10.0 | Lumber DOL | 1.15 | BC | 0.19 | Vert(TL) | n/a | - | n/a | 999 | | |
| BCLL | 0.0 * | Rep Stress Incr | YES | WB | 0.00 | Horiz(TL) | 0.01 | 3 | n/a | n/a | | |
| BCDL | 10.0 | Code | IRC2015/TPI2014 | Matrix-MSH | | | | | | | Weight: 19 lb | FT = 20% |

**LUMBER**
TOP CHORD 2x4 SP No.2
BOT CHORD 2x4 SP No.2

**BRACING**
TOP CHORD Structural wood sheathing directly applied or 6-0-0 oc purlins.
BOT CHORD Rigid ceiling directly applied or 10-0-0 oc bracing.

**REACTIONS** (lb/size) 1=233/6-3-12, (min. 0-1-8), 3=233/6-3-12, (min. 0-1-8)
Max Horiz 1=-49 (LC 6)
Max Uplift 1=-28 (LC 10), 3=-32 (LC 11)

**FORCES** (lb) - Max. Comp./Max. Ten. - All forces 250 (lb) or less except when shown.
TOP CHORD 1-2=-261/83

**NOTES**
1) Unbalanced roof live loads have been considered for this design.
2) Wind: ASCE 7-10; Vult=130mph (3-second gust) Vasd=103mph; TCDL=6.0psf; BCDL=6.0psf; h=35ft; Cat. II; Exp B; Enclosed; MWFRS (envelope) exterior zone and C-C Exterior (2) zone; cantilever left and right exposed ; end vertical left and right exposed;C-C for members and forces & MWFRS for reactions shown; Lumber DOL=1.60 plate grip DOL=1.60
3) Gable requires continuous bottom chord bearing.
4) This truss has been designed for a 10.0 psf bottom chord live load nonconcurrent with any other live loads.
5) * This truss has been designed for a live load of 20.0psf on the bottom chord in all areas where a rectangle 3-06-00 tall by 2-00-00 wide will fit between the bottom chord and any other members.
6) Provide mechanical connection (by others) of truss to bearing plate capable of withstanding 28 lb uplift at joint 1 and 32 lb uplift at joint 3.
7) Beveled plate or shim required to provide full bearing surface with truss chord at joint(s) 3.
8) This truss is designed in accordance with the 2015 International Residential Code sections R502.11.1 and R802.10.2 and referenced standard ANSI/TPI 1.

| Job | Truss | Truss Type | Qty | Ply | Professional Bldrs / Hanover Craftsman |
|---|---|---|---|---|---|
| 72406537 | V12 | Truss | 2 | 1 | Job Reference (optional) |



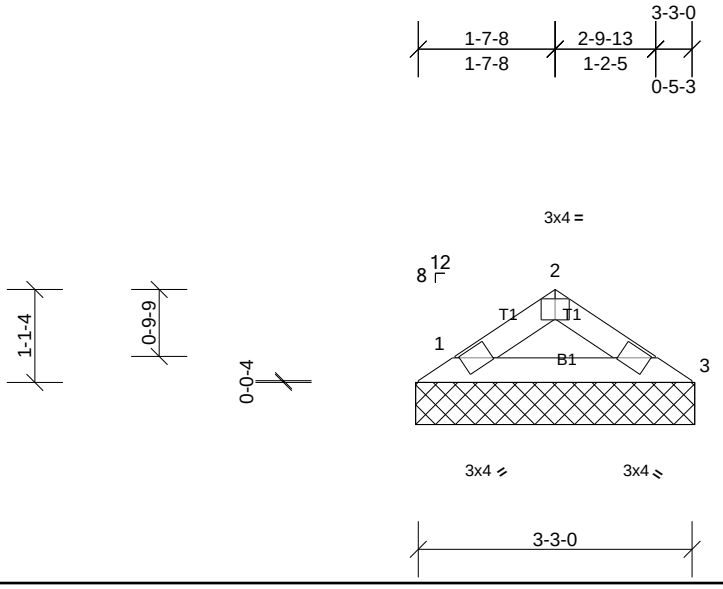


Plate Offsets (X, Y): [2:0-2-0,Edge]

| Loading | (psf) | Spacing | 2-0-0 | CSI | | DEFL | in | (loc) | l/defl | L/d | PLATES | GRIP |
|---|---|---|---|---|---|---|---|---|---|---|---|---|
| TCLL (roof) | 20.0 | Plate Grip DOL | 1.15 | TC | 0.06 | Vert(LL) | n/a | - | n/a | 999 | MT20 | 244/190 |
| TCDL | 10.0 | Lumber DOL | 1.15 | BC | 0.06 | Vert(TL) | n/a | - | n/a | 999 | | |
| BCLL | 0.0 * | Rep Stress Incr | YES | WB | 0.00 | Horiz(TL) | 0.00 | 3 | n/a | n/a | | |
| BCDL | 10.0 | Code | IRC2015/TPI2014 | Matrix-MP | | | | | | | Weight: 9 lb | FT = 20% |

**LUMBER**

| | |
|---|---|
| TOP CHORD | 2x4 SP No.2 |
| BOT CHORD | 2x4 SP No.2 |

**BRACING**

| | |
|---|---|
| TOP CHORD | Structural wood sheathing directly applied or 3-3-0 oc purlins. |
| BOT CHORD | Rigid ceiling directly applied or 10-0-0 oc bracing. |

**REACTIONS** (lb/size) 1=113/3-3-12, (min. 0-1-8), 3=113/3-3-12, (min. 0-1-8)
Max Horiz 1=-24 (LC 6)
Max Uplift 1=-13 (LC 10), 3=-17 (LC 11)

**FORCES** (lb) - Max. Comp./Max. Ten. - All forces 250 (lb) or less except when shown.

**NOTES**

1) Unbalanced roof live loads have been considered for this design.
2) Wind: ASCE 7-10; Vult=130mph (3-second gust) Vasd=103mph; TCDL=6.0psf; BCDL=6.0psf; h=35ft; Cat. II; Exp B; Enclosed; MWFRS (envelope) exterior zone and C-C Exterior (2) zone; cantilever left and right exposed ; end vertical left and right exposed;C-C for members and forces & MWFRS for reactions shown; Lumber DOL=1.60 plate grip DOL=1.60
3) Gable requires continuous bottom chord bearing.
4) This truss has been designed for a 10.0 psf bottom chord live load nonconcurrent with any other live loads.
5) * This truss has been designed for a live load of 20.0psf on the bottom chord in all areas where a rectangle 3-06-00 tall by 2-00-00 wide will fit between the bottom chord and any other members.
6) Provide mechanical connection (by others) of truss to bearing plate capable of withstanding 13 lb uplift at joint 1 and 17 lb uplift at joint 3.
7) Beveled plate or shim required to provide full bearing surface with truss chord at joint(s) 3.
8) This truss is designed in accordance with the 2015 International Residential Code sections R502.11.1 and R802.10.2 and referenced standard ANSI/TPI 1.