| Job | Truss | Truss Type | Qty | Ply | |
|---|---|---|---|---|---|
| 23090033 - Elev B | A1 | Hip Girder | 1 | 1 | Job Reference (optional) |



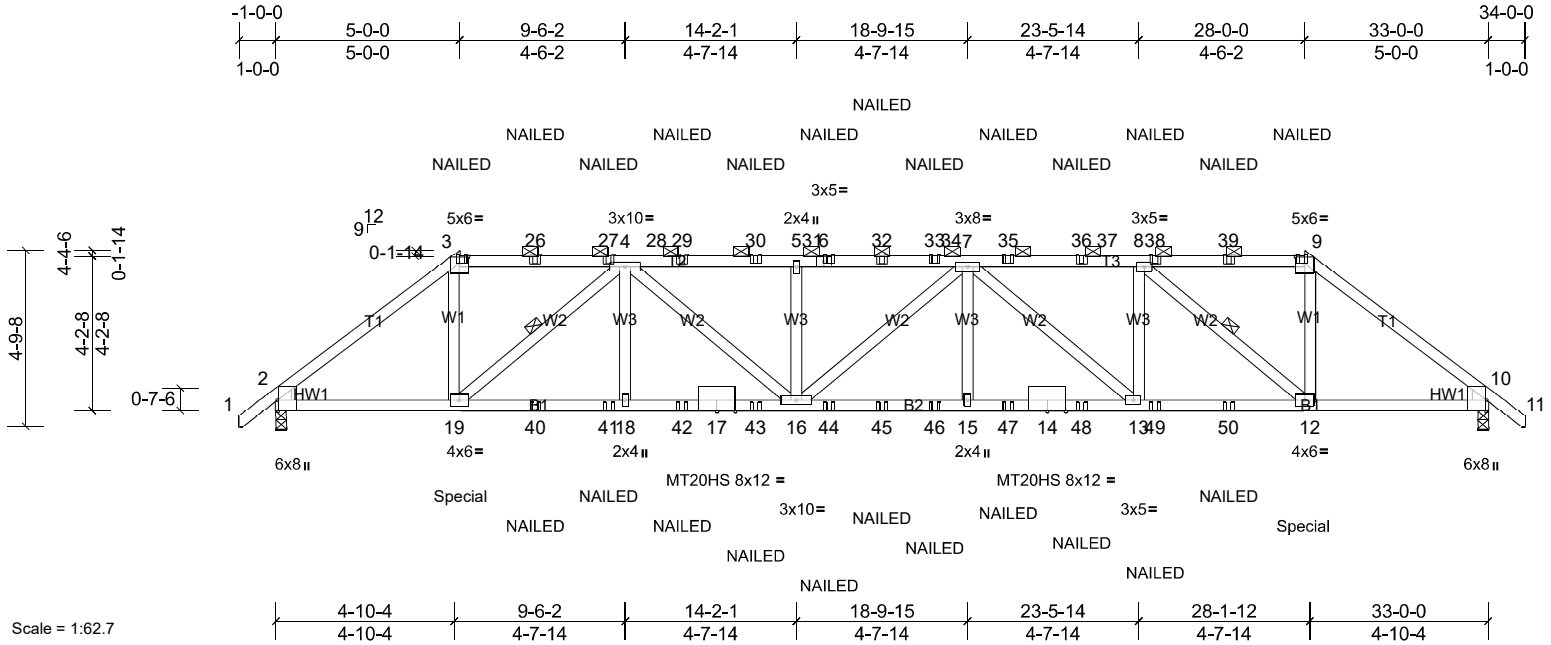


Scale = 1:62.7

Plate Offsets (X, Y): [2:0-3-8,Edge], [3:0-3-0,0-2-2], [9:0-3-0,0-2-2], [10:0-3-8,Edge]

| Loading | (psf) | Spacing | 2-0-0 | CSI | | DEFL | in | (loc) | l/defl | L/d | PLATES | GRIP |
|---|---|---|---|---|---|---|---|---|---|---|---|---|
| TCLL (roof) | 20.0 | Plate Grip DOL | 1.15 | TC | 0.99 | Vert(LL) | -0.27 | 15-16 | >999 | 240 | MT20 | 244/190 |
| Snow (Pf/Pg) | 18.9/20.0 | Lumber DOL | 1.15 | BC | 0.79 | Vert(CT) | -0.55 | 15-16 | >715 | 180 | MT20HS | 187/143 |
| TCDL | 10.0 | Rep Stress Incr | NO | WB | 0.73 | Horz(CT) | 0.16 | 10 | n/a | n/a | | |
| BCLL | 0.0* | Code | IRC2018/TPI2014 | Matrix-MSH | | | | | | | | |
| BCDL | 10.0 | | | | | | | | | | Weight: 182 lb | FT = 20% |

**LUMBER**

TOP CHORD 2x4 SP No.1 *Except* T2:2x4 SP No.2
BOT CHORD 2x4 SP 2400F 2.0E
WEBS 2x4 SP No.3
WEDGE Left: 2x4 SP No.3
Right: 2x4 SP No.3

**BRACING**

TOP CHORD Structural wood sheathing directly applied or 2-6-3 oc purlins, except 2-0-0 oc purlins (2-0-5 max.): 3-9.
BOT CHORD Rigid ceiling directly applied or 10-0-0 oc bracing.
WEBS 1 Row at midpt 4-19, 8-12

MiTek recommends that Stabilizers and required cross bracing be installed during truss erection, in accordance with Stabilizer Installation guide.

**REACTIONS** (lb/size) 2=2173/0-3-8, (min. 0-2-0), 10=2173/0-3-8, (min. 0-2-0)
Max Horiz 2=82 (LC 10)
Max Uplift 2=-212 (LC 8), 10=-212 (LC 7)
Max Grav 2=2415 (LC 2), 10=2414 (LC 2)

**FORCES** (lb) - Max. Comp./Max. Ten. - All forces 250 (lb) or less except when shown.

TOP CHORD 2-3=-3467/372, 3-26=-2640/310, 26-27=-2642/310, 4-27=-2642/310, 4-28=-5054/532, 28-29=-5054/532, 29-30=-5054/532, 5-30=-5054/532, 5-31=-5054/532, 6-31=-5054/532, 6-32=-5054/532, 32-33=-5054/532, 33-34=-5054/532, 7-34=-5054/532, 7-35=-4309/464, 35-36=-4309/464, 36-37=-4309/464, 8-37=-4309/464, 8-38=-2643/310, 38-39=-2642/310, 9-39=-2640/310, 9-10=-3468/372

BOT CHORD 2-19=-310/2744, 19-40=-462/4342, 40-41=-462/4342, 18-41=-462/4342, 18-42=-462/4342, 17-42=-462/4342, 17-43=-462/4342, 16-43=-462/4342, 16-44=-517/5089, 44-45=-517/5089, 45-46=-517/5089, 15-46=-517/5089, 15-47=-517/5089, 14-47=-517/5089, 14-48=-517/5089, 13-48=-517/5089, 13-49=-426/4325, 49-50=-426/4325, 12-50=-426/4325, 10-12=-240/2719

WEBS 3-19=-121/1776, 4-19=-2212/252, 4-18=0/254, 4-16=-114/1024, 5-16=-448/171, 7-13=-1037/118, 8-13=0/911, 8-12=-2206/250, 9-12=-121/1777

**NOTES**

1) Unbalanced roof live loads have been considered for this design.
2) Wind: ASCE 7-16; Vult=130mph (3-second gust) Vasd=103mph; TCDL=6.0psf; BCDL=6.0psf; h=25ft; Cat. II; Exp B; Enclosed; MWFRS (envelope); cantilever left and right exposed ; end vertical left and right exposed; Lumber DOL=1.60 plate grip DOL=1.33
3) TCLL: ASCE 7-16; Pr=20.0 psf (roof LL: Lum DOL=1.15 Plate DOL=1.15); Pg=20.0 psf; Pf=18.9 psf (Lum DOL=1.15 Plate DOL=1.15); Is=1.0; Rough Cat B; Fully Exp.; Ce=0.9; Cs=1.00; Ct=1.10, Lu=50-0-0; Min. flat roof snow load governs. Rain surcharge applied to all exposed surfaces with slopes less than 0.500/12 in accordance with IBC 1608.3.4.
4) Unbalanced snow loads have been considered for this design.
5) This truss has been designed for greater of min roof live load of 12.0 psf or 2.00 times flat roof load of 13.9 psf on overhangs non-concurrent with other live loads.
6) Provide adequate drainage to prevent water ponding.
7) All plates are MT20 plates unless otherwise indicated.
8) * This truss has been designed for a live load of 20.0psf on the bottom chord in all areas where a rectangle 3-06-00 tall by 2-00-00 wide will fit between the bottom chord and any other members.
9) One H2.5A Simpson Strong-Tie connectors recommended to connect truss to bearing walls due to UPLIFT at jt(s) 2 and 10. This connection is for uplift only and does not consider lateral forces.
10) This truss is designed in accordance with the 2018 International Residential Code sections R502.11.1 and R802.10.2 and referenced standard ANSI/TPI 1.
11) Graphical purlin representation does not depict the size or the orientation of the purlin along the top and/or bottom chord.
12) "NAILED" indicates 3-10d (0.148"x3") or 3-12d (0.148"x3.25") toe-nails per NDS guidlines.
13) Hanger(s) or other connection device(s) shall be provided sufficient to support concentrated load(s) 407 lb down and 60 lb up at 5-0-0, and 407 lb down and 60 lb up at 27-11-4 on bottom chord. The design/selection of such connection device(s) is the responsibility of others.

**LOAD CASE(S)** Standard

1) Dead + Snow (balanced): Lumber Increase=1.15, Plate Increase=1.15
   Uniform Loads (lb/ft)
   Vert: 1-3=-48, 3-9=-58, 9-11=-48, 20-23=-20
   Concentrated Loads (lb)
   Vert: 3=-49, 6=-45, 19=-378, 12=-378, 9=-49, 26=-45, 27=-45, 29=-45, 30=-45, 32=-45, 33=-45, 35=-45, 36=-45, 38=-45, 39=-45, 40=-40, 41=-40, 42=-40, 43=-40, 44=-40, 45=-40, 46=-40, 47=-40, 48=-40, 49=-40, 50=-40

| Job | Truss | Truss Type | Qty | Ply | |
|---|---|---|---|---|---|
| 23090033 - Elev B | A2 | Hip | 1 | 1 | Job Reference (optional) |



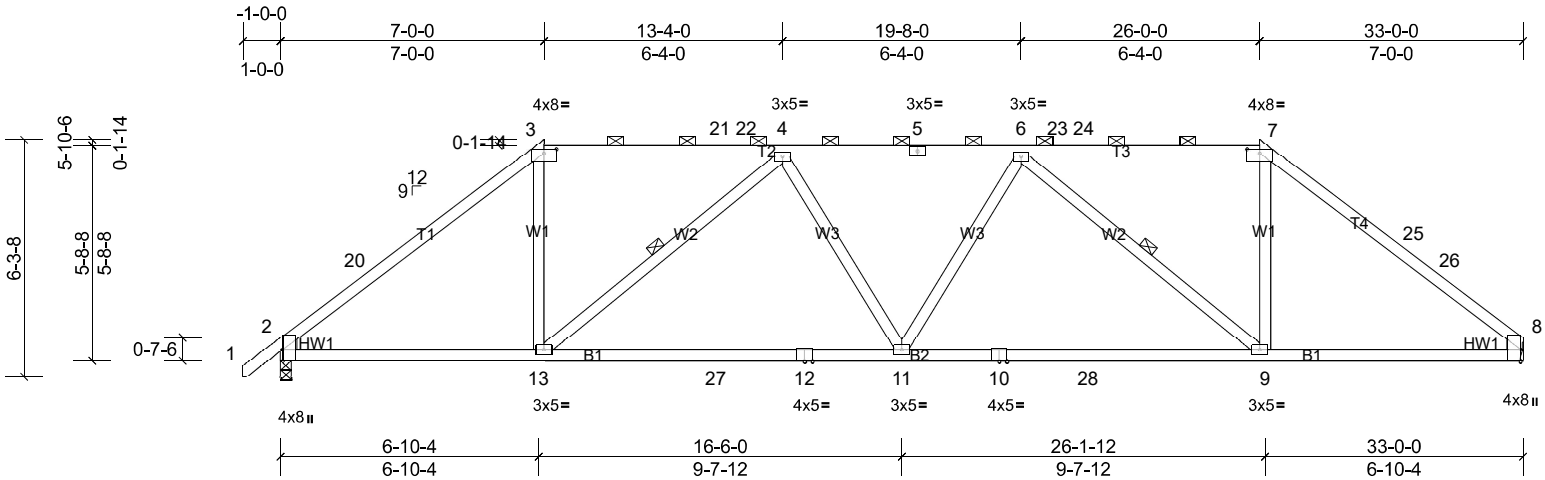


Scale = 1:61.2

Plate Offsets (X, Y): [2:0-3-8,Edge], [3:0-4-0,0-1-6], [7:0-4-0,0-1-6], [8:0-3-8,Edge]

| Loading | (psf) | Spacing | 2-0-0 | CSI | | DEFL | in | (loc) | l/defl | L/d | PLATES | GRIP |
|---|---|---|---|---|---|---|---|---|---|---|---|---|
| TCLL (roof) | 20.0 | Plate Grip DOL | 1.15 | TC | 0.97 | Vert(LL) | -0.29 | 11-13 | >999 | 240 | MT20 | 244/190 |
| Snow (Pf/Pg) | 18.9/20.0 | Lumber DOL | 1.15 | BC | 0.70 | Vert(CT) | -0.48 | 11-13 | >822 | 180 | | |
| TCDL | 10.0 | Rep Stress Incr | YES | WB | 0.47 | Horz(CT) | 0.10 | 8 | n/a | n/a | | |
| BCLL | 0.0* | Code | IRC2018/TPI2014 | Matrix-MSH | | | | | | | | |
| BCDL | 10.0 | | | | | | | | | | Weight: 165 lb | FT = 20% |

**LUMBER**

TOP CHORD 2x4 SP No.2 *Except* T4:2x4 SP No.1
BOT CHORD 2x4 SP No.1 *Except* B2:2x4 SP 2400F 2.0E
WEBS 2x4 SP No.3
WEDGE Left: 2x4 SP No.3
Right: 2x4 SP No.3

**BRACING**

TOP CHORD Structural wood sheathing directly applied, except
2-0-0 oc purlins (2-7-4 max.): 3-7.
BOT CHORD Rigid ceiling directly applied or 10-0-0 oc bracing.
WEBS 1 Row at midpt 4-13, 6-9

MiTek recommends that Stabilizers and required cross bracing be installed during truss erection, in accordance with Stabilizer Installation guide.

**REACTIONS** (lb/size) 2=1258/0-3-8, (min. 0-1-13), 8=1212/ Mechanical, (min. 0-1-8)
Max Horiz 2=106 (LC 12)
Max Grav 2=1529 (LC 45), 8=1503 (LC 45)

**FORCES** (lb) - Max. Comp./Max. Ten. - All forces 250 (lb) or less except when shown.
TOP CHORD 2-20=-2173/56, 3-20=-2143/89, 3-21=-1672/126, 21-22=-1673/126, 4-22=-1674/126, 4-5=-2669/93, 5-6=-2669/93, 6-23=-1677/124, 23-24=-1676/124, 7-24=-1675/125, 7-25=-2084/96, 25-26=-2147/70, 8-26=-2176/63
BOT CHORD 2-13=-78/1699, 13-27=-15/2544, 12-27=-15/2544, 11-12=-15/2544, 10-11=-7/2544, 10-28=-7/2544, 9-28=-7/2544, 8-9=0/1702
WEBS 3-13=0/993, 4-13=-1166/90, 4-11=0/288, 6-11=0/287, 6-9=-1163/90, 7-9=0/994

**NOTES**

1) Unbalanced roof live loads have been considered for this design.
2) Wind: ASCE 7-16; Vult=130mph (3-second gust) Vasd=103mph; TCDL=6.0psf; BCDL=6.0psf; h=25ft; Cat. II; Exp B; Enclosed; MWFRS (envelope) and C-C Exterior(2E) -0-11-7 to 2-4-3, Interior (1) 2-4-3 to 7-0-0, Exterior(2R) 7-0-0 to 11-8-0, Interior (1) 11-8-0 to 26-0-0, Exterior(2R) 26-0-0 to 30-8-0, Interior (1) 30-8-0 to 33-0-0 zone; cantilever left and right exposed ; end vertical left and right exposed;C-C for members and forces & MWFRS for reactions shown; Lumber DOL=1.60 plate grip DOL=1.33
3) TCLL: ASCE 7-16; Pr=20.0 psf (roof LL: Lum DOL=1.15 Plate DOL=1.15); Pg=20.0 psf; Pf=18.9 psf (Lum DOL=1.15 Plate DOL=1.15); Is=1.0; Rough Cat B; Fully Exp.; Ce=0.9; Cs=1.00; Ct=1.10, Lu=50-0-0; Min. flat roof snow load governs. Rain surcharge applied to all exposed surfaces with slopes less than 0.500/12 in accordance with IBC 1608.3.4.
4) Unbalanced snow loads have been considered for this design.
5) This truss has been designed for greater of min roof live load of 12.0 psf or 2.00 times flat roof load of 13.9 psf on overhangs non-concurrent with other live loads.
6) Provide adequate drainage to prevent water ponding.
7) * This truss has been designed for a live load of 20.0psf on the bottom chord in all areas where a rectangle 3-06-00 tall by 2-00-00 wide will fit between the bottom chord and any other members, with BCDL = 10.0psf.
8) Refer to girder(s) for truss to truss connections.
9) This truss is designed in accordance with the 2018 International Residential Code sections R502.11.1 and R802.10.2 and referenced standard ANSI/TPI 1.
10) Graphical purlin representation does not depict the size or the orientation of the purlin along the top and/or bottom chord.

**LOAD CASE(S)** Standard

| Job | Truss | Truss Type | Qty | Ply | |
|---|---|---|---|---|---|
| 23090033 - Elev B | A3 | Hip | 1 | 1 | Job Reference (optional) |



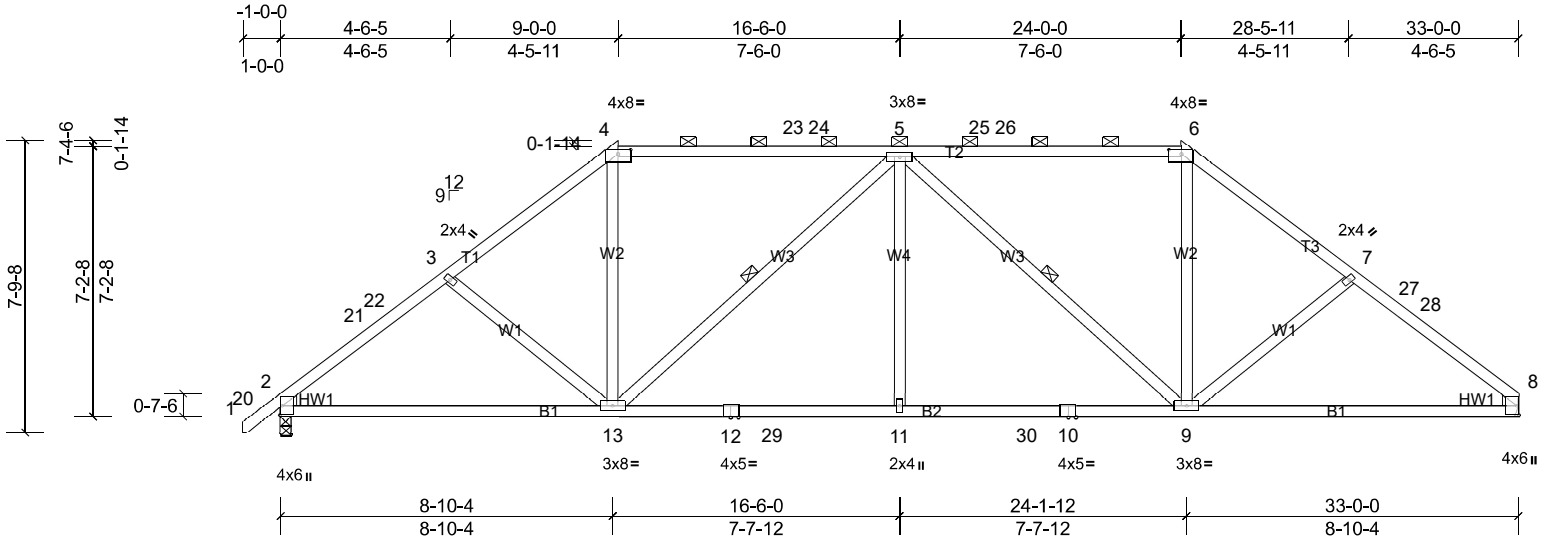


Scale = 1:61.4

Plate Offsets (X, Y): [4:0-4-0,0-1-6], [6:0-4-0,0-1-6]

| Loading | (psf) | Spacing | 2-0-0 | CSI | | DEFL | in | (loc) | l/defl | L/d | PLATES | GRIP |
|---|---|---|---|---|---|---|---|---|---|---|---|---|
| TCLL (roof) | 20.0 | Plate Grip DOL | 1.15 | TC | 0.93 | Vert(LL) | -0.16 | 11-13 | >999 | 240 | MT20 | 244/190 |
| Snow (Pf/Pg) | 18.9/20.0 | Lumber DOL | 1.15 | BC | 0.90 | Vert(CT) | -0.27 | 11-13 | >999 | 180 | | |
| TCDL | 10.0 | Rep Stress Incr | YES | WB | 0.42 | Horz(CT) | 0.09 | 8 | n/a | n/a | | |
| BCLL | 0.0* | Code | IRC2018/TPI2014 | Matrix-MSH | | | | | | | | |
| BCDL | 10.0 | | | | | | | | | | Weight: 184 lb | FT = 20% |

**LUMBER**

TOP CHORD 2x4 SP No.2 *Except* T2:2x4 SP No.1
BOT CHORD 2x4 SP No.2
WEBS 2x4 SP No.3
WEDGE Left: 2x4 SP No.3
Right: 2x4 SP No.3

**BRACING**

TOP CHORD Structural wood sheathing directly applied or 3-11-1 oc purlins, except 2-0-0 oc purlins (2-2-0 max.): 4-6.
BOT CHORD Rigid ceiling directly applied or 10-0-0 oc bracing.
WEBS 1 Row at midpt 5-13, 5-9

MiTek recommends that Stabilizers and required cross bracing be installed during truss erection, in accordance with Stabilizer Installation guide.

**REACTIONS** (lb/size) 2=1238/0-3-8, (min. 0-1-13), 8=1192/ Mechanical, (min. 0-1-8)
Max Horiz 2=134 (LC 14)
Max Grav 2=1555 (LC 46), 8=1495 (LC 46)

**FORCES** (lb) - Max. Comp./Max. Ten. - All forces 250 (lb) or less except when shown.

TOP CHORD 2-21=-2005/92, 21-22=-1944/106, 3-22=-1932/117, 3-4=-1907/122, 4-23=-1512/140, 23-24=-1513/140, 5-24=-1514/139, 5-25=-1515/138, 25-26=-1513/138, 6-26=-1513/139, 6-7=-1909/129, 7-27=-1935/117, 27-28=-1939/108, 8-28=-2009/92
BOT CHORD 2-13=-90/1570, 12-13=0/2075, 12-29=0/2075, 11-29=0/2075, 11-30=0/2075, 10-30=0/2075, 9-10=0/2075, 8-9=-40/1548
WEBS 3-13=-317/119, 4-13=0/807, 5-13=-759/80, 5-11=0/414, 5-9=-758/80, 6-9=0/808, 7-9=-322/119

**NOTES**

1) Unbalanced roof live loads have been considered for this design.
2) Wind: ASCE 7-16; Vult=130mph (3-second gust) Vasd=103mph; TCDL=6.0psf; BCDL=6.0psf; h=25ft; Cat. II; Exp B; Enclosed; MWFRS (envelope) and C-C Exterior(2E) -0-11-7 to 2-4-3, Interior (1) 2-4-3 to 9-0-0, Exterior(2R) 9-0-0 to 13-8-0, Interior (1) 13-8-0 to 24-0-0, Exterior(2R) 24-0-0 to 28-7-1, Interior (1) 28-7-1 to 33-0-0 zone; cantilever left and right exposed ; end vertical left and right exposed;C-C for members and forces & MWFRS for reactions shown; Lumber DOL=1.60 plate grip DOL=1.33
3) TCLL: ASCE 7-16; Pr=20.0 psf (roof LL: Lum DOL=1.15 Plate DOL=1.15); Pg=20.0 psf; Pf=18.9 psf (Lum DOL=1.15 Plate DOL=1.15); Is=1.0; Rough Cat B; Fully Exp.; Ce=0.9; Cs=1.00; Ct=1.10, Lu=50-0-0; Min. flat roof snow load governs. Rain surcharge applied to all exposed surfaces with slopes less than 0.500/12 in accordance with IBC 1608.3.4.
4) Unbalanced snow loads have been considered for this design.
5) This truss has been designed for greater of min roof live load of 12.0 psf or 2.00 times flat roof load of 13.9 psf on overhangs non-concurrent with other live loads.
6) Provide adequate drainage to prevent water ponding.
7) * This truss has been designed for a live load of 20.0psf on the bottom chord in all areas where a rectangle 3-06-00 tall by 2-00-00 wide will fit between the bottom chord and any other members, with BCDL = 10.0psf.
8) Refer to girder(s) for truss to truss connections.
9) This truss is designed in accordance with the 2018 International Residential Code sections R502.11.1 and R802.10.2 and referenced standard ANSI/TPI 1.
10) Graphical purlin representation does not depict the size or the orientation of the purlin along the top and/or bottom chord.

**LOAD CASE(S)** Standard

| Job | Truss | Truss Type | Qty | Ply | |
|---|---|---|---|---|---|
| 23090033 - Elev B | A4 | Hip | 1 | 1 | Job Reference (optional) |



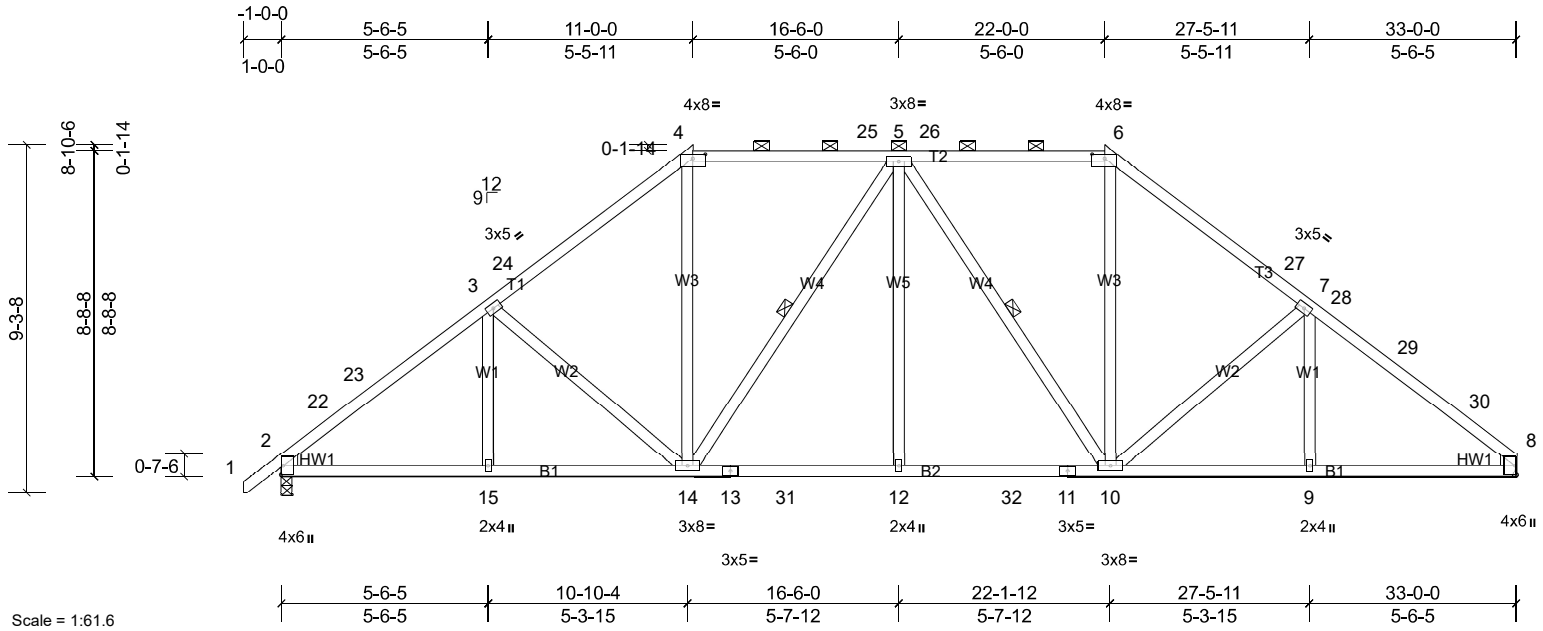


Scale = 1:61.6

Plate Offsets (X, Y): [4:0-4-0,0-1-6], [6:0-4-0,0-1-6]

| Loading | (psf) | Spacing | 2-0-0 | CSI | | DEFL | in | (loc) | l/defl | L/d | PLATES | GRIP |
|---|---|---|---|---|---|---|---|---|---|---|---|---|
| TCLL (roof) | 20.0 | Plate Grip DOL | 1.15 | TC | 0.67 | Vert(LL) | -0.10 | 12-14 | >999 | 240 | MT20 | 244/190 |
| Snow (Pf/Pg) | 18.9/20.0 | Lumber DOL | 1.15 | BC | 0.73 | Vert(CT) | -0.19 | 10-12 | >999 | 180 | | |
| TCDL | 10.0 | Rep Stress Incr | YES | WB | 0.46 | Horz(CT) | 0.08 | 8 | n/a | n/a | | |
| BCLL | 0.0* | Code | IRC2018/TPI2014 | Matrix-MSH | | | | | | | | |
| BCDL | 10.0 | | | | | | | | | | Weight: 207 lb | FT = 20% |

**LUMBER**

TOP CHORD 2x4 SP No.2
BOT CHORD 2x4 SP No.2
WEBS 2x4 SP No.3
WEDGE Left: 2x4 SP No.3
Right: 2x4 SP No.3

**BRACING**

TOP CHORD Structural wood sheathing directly applied or 3-7-9 oc purlins, except 2-0-0 oc purlins (4-7-7 max.): 4-6.
BOT CHORD Rigid ceiling directly applied or 10-0-0 oc bracing.
WEBS 1 Row at midpt 5-14, 5-10

MiTek recommends that Stabilizers and required cross bracing be installed during truss erection, in accordance with Stabilizer Installation guide.

**REACTIONS** (lb/size) 2=1218/0-3-8, (min. 0-1-14), 8=1172/ Mechanical, (min. 0-1-8)
Max Horiz 2=162 (LC 12)
Max Grav 2=1579 (LC 46), 8=1539 (LC 46)

**FORCES** (lb) - Max. Comp./Max. Ten. - All forces 250 (lb) or less except when shown.

TOP CHORD 2-22=-2142/68, 22-23=-2119/75, 3-23=-1957/98, 3-24=-1749/119, 4-24=-1619/154, 4-25=-1292/169, 5-25=-1294/169, 5-26=-1294/167, 6-26=-1292/168, 6-27=-1620/159, 7-27=-1750/124, 7-28=-1938/106, 28-29=-1960/103, 29-30=-2048/85, 8-30=-2146/76
BOT CHORD 2-15=-91/1705, 14-15=-46/1705, 13-14=0/1544, 13-31=0/1544, 12-31=0/1544, 12-32=0/1544, 11-32=0/1544, 10-11=0/1544, 9-10=-19/1639, 8-9=-19/1639
WEBS 3-14=-509/100, 4-14=0/713, 5-14=-464/80, 5-12=0/322, 5-10=-464/80, 6-10=0/714, 7-10=-514/101

**NOTES**

1) Unbalanced roof live loads have been considered for this design.
2) Wind: ASCE 7-16; Vult=130mph (3-second gust) Vasd=103mph; TCDL=6.0psf; BCDL=6.0psf; h=25ft; Cat. II; Exp B; Enclosed; MWFRS (envelope) and C-C Exterior(2E) -0-11-7 to 2-4-3, Interior (1) 2-4-3 to 11-0-0, Exterior(2R) 11-0-0 to 15-8-0, Interior (1) 15-8-0 to 22-0-0, Exterior(2R) 22-0-0 to 26-8-0, Interior (1) 26-8-0 to 33-0-0 zone; cantilever left and right exposed ; end vertical left and right exposed;C-C for members and forces & MWFRS for reactions shown; Lumber DOL=1.60 plate grip DOL=1.33
3) TCLL: ASCE 7-16; Pr=20.0 psf (roof LL: Lum DOL=1.15 Plate DOL=1.15); Pg=20.0 psf; Pf=18.9 psf (Lum DOL=1.15 Plate DOL=1.15); Is=1.0; Rough Cat B; Fully Exp.; Ce=0.9; Cs=1.00; Ct=1.10, Lu=50-0-0; Min. flat roof snow load governs. Rain surcharge applied to all exposed surfaces with slopes less than 0.500/12 in accordance with IBC 1608.3.4.
4) Unbalanced snow loads have been considered for this design.
5) This truss has been designed for greater of min roof live load of 12.0 psf or 2.00 times flat roof load of 13.9 psf on overhangs non-concurrent with other live loads.
6) Provide adequate drainage to prevent water ponding.
7) * This truss has been designed for a live load of 20.0psf on the bottom chord in all areas where a rectangle 3-06-00 tall by 2-00-00 wide will fit between the bottom chord and any other members, with BCDL = 10.0psf.
8) Refer to girder(s) for truss to truss connections.
9) This truss is designed in accordance with the 2018 International Residential Code sections R502.11.1 and R802.10.2 and referenced standard ANSI/TPI 1.
10) Graphical purlin representation does not depict the size or the orientation of the purlin along the top and/or bottom chord.

**LOAD CASE(S)** Standard

| Job | Truss | Truss Type | Qty | Ply | |
|---|---|---|---|---|---|
| 23090033 - Elev B | A5 | Hip | 1 | 1 | Job Reference (optional) |



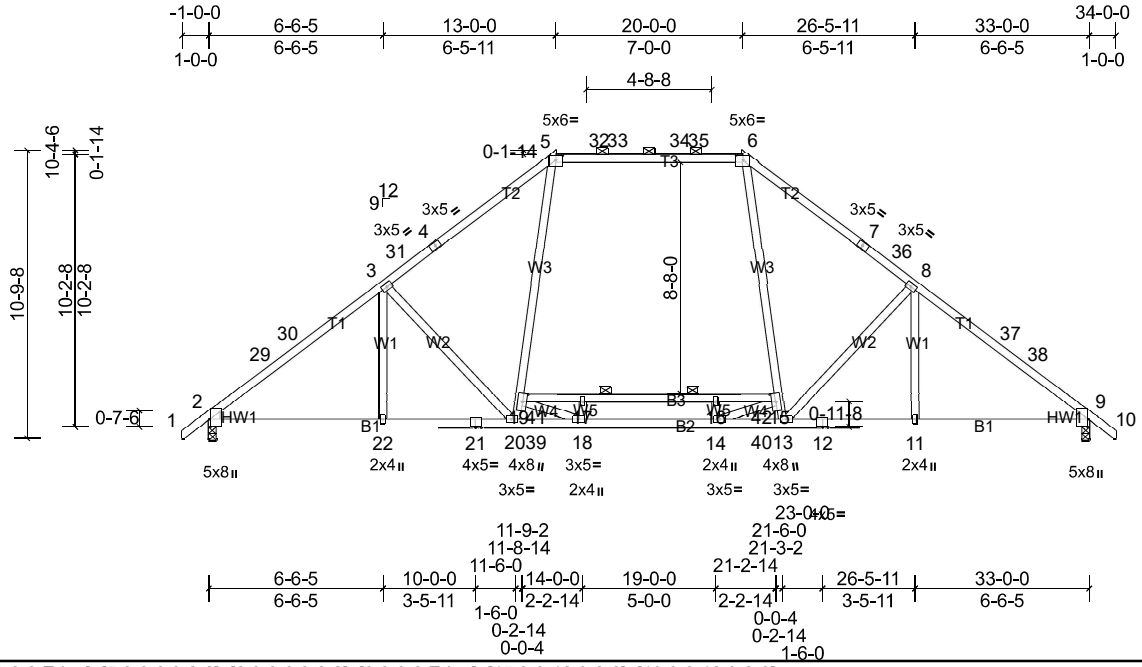


Scale = 1:86.4

Plate Offsets (X, Y): [2:0-3-8,Edge], [5:0-3-0,0-2-2], [6:0-3-0,0-2-2], [9:0-3-8,Edge], [15:0-3-12,0-2-0], [19:0-3-12,0-2-0]

| Loading | (psf) | Spacing | 2-0-0 | CSI | | DEFL | in | (loc) | l/defl | L/d | PLATES | GRIP |
|---|---|---|---|---|---|---|---|---|---|---|---|---|
| TCLL (roof) | 20.0 | Plate Grip DOL | 1.15 | TC | 0.85 | Vert(LL) | -0.49 | 20-22 | >813 | 240 | MT20 | 244/190 |
| Snow (Pf/Pg) | 18.9/20.0 | Lumber DOL | 1.15 | BC | 0.96 | Vert(CT) | -0.57 | 20-22 | >691 | 180 | | |
| TCDL | 10.0 | Rep Stress Incr | YES | WB | 0.70 | Horz(CT) | 0.11 | 9 | n/a | n/a | | |
| BCLL | 0.0* | Code | IRC2018/TPI2014 | Matrix-MSH | | | | | | | | |
| BCDL | 10.0 | | | | | | | | | | Weight: 200 lb | FT = 20% |

**LUMBER**

TOP CHORD 2x4 SP No.1 *Except* T3:2x4 SP 2400F 2.0E, T1:2x4 SP No.2
BOT CHORD 2x4 SP No.1 *Except* B2,B3:2x4 SP No.2
WEBS 2x4 SP No.3 *Except* W3:2x4 SP No.2
WEDGE Left: 2x4 SP No.3
Right: 2x4 SP No.3

**BRACING**

TOP CHORD Structural wood sheathing directly applied, except
2-0-0 oc purlins (5-6-2 max.): 5-6.
BOT CHORD Rigid ceiling directly applied or 10-0-0 oc bracing, Except:
2-2-0 oc bracing: 14-18.
4-11-0 oc bracing: 15-19

MiTek recommends that Stabilizers and required cross bracing be installed during truss erection, in accordance with Stabilizer Installation guide.

**REACTIONS** (lb/size) 2=1396/0-3-8, (min. 0-2-5), 9=1396/0-3-8, (min. 0-2-5)
Max Horiz 2=195 (LC 14)
Max Grav 2=1980 (LC 48), 9=1980 (LC 50)

**FORCES** (lb) - Max. Comp./Max. Ten. - All forces 250 (lb) or less except when shown.

TOP CHORD 2-29=-2739/0, 29-30=-2667/0, 3-30=-2554/0, 3-31=-2390/0, 4-31=-2303/0, 4-5=-2231/0, 5-32=-1648/4, 32-33=-1648/4, 33-34=-1648/4, 34-35=-1648/4, 6-35=-1648/4, 6-7=-2231/0, 7-36=-2303/0, 8-36=-2390/0, 8-37=-2554/0, 37-38=-2667/0, 9-38=-2739/0

BOT CHORD 2-22=-41/2243, 21-22=0/2243, 20-21=0/2243, 20-39=0/1809, 18-39=0/1809, 14-18=0/2866, 14-40=0/1687, 13-40=0/1687, 12-13=0/2115, 11-12=0/2115, 9-11=0/2115, 19-41=-1407/0, 17-41=-1407/0, 16-17=-1407/0, 16-42=-1407/0, 15-42=-1407/0

WEBS 19-20=-20/551, 5-19=0/1046, 6-15=0/1046, 13-15=-20/550, 3-20=-582/160, 8-13=-583/160, 17-18=-274/22, 18-19=0/1463, 14-16=-274/22, 14-15=0/1463

**NOTES**

1) Unbalanced roof live loads have been considered for this design.
2) Wind: ASCE 7-16; Vult=130mph (3-second gust) Vasd=103mph; TCDL=6.0psf; BCDL=6.0psf; h=25ft; Cat. II; Exp B; Enclosed; MWFRS (envelope) and C-C Exterior(2E) -0-11-7 to 2-4-3, Interior (1) 2-4-3 to 13-0-0, Exterior(2R) 13-0-0 to 17-8-0, Interior (1) 17-8-0 to 20-0-0, Exterior(2R) 20-0-0 to 24-8-0, Interior (1) 24-8-0 to 33-11-7 zone; cantilever left and right exposed ; end vertical left and right exposed;C-C for members and forces & MWFRS for reactions shown; Lumber DOL=1.60 plate grip DOL=1.33
3) TCLL: ASCE 7-16; Pr=20.0 psf (roof LL: Lum DOL=1.15 Plate DOL=1.15); Pg=20.0 psf; Pf=18.9 psf (Lum DOL=1.15 Plate DOL=1.15); Is=1.0; Rough Cat B; Fully Exp.; Ce=0.9; Cs=1.00; Ct=1.10, Lu=50-0-0; Min. flat roof snow load governs. Rain surcharge applied to all exposed surfaces with slopes less than 0.500/12 in accordance with IBC 1608.3.4.
4) Unbalanced snow loads have been considered for this design.
5) This truss has been designed for greater of min roof live load of 12.0 psf or 2.00 times flat roof load of 13.9 psf on overhangs non-concurrent with other live loads.
6) 200.0lb AC unit load placed on the bottom chord, 16-6-0 from left end, supported at two points, 5-0-0 apart.
7) Provide adequate drainage to prevent water ponding.
8) All plates are 3x5 MT20 unless otherwise indicated.
9) * This truss has been designed for a live load of 20.0psf on the bottom chord in all areas where a rectangle 3-06-00 tall by 2-00-00 wide will fit between the bottom chord and any other members, with BCDL = 10.0psf.
10) This truss is designed in accordance with the 2018 International Residential Code sections R502.11.1 and R802.10.2 and referenced standard ANSI/TPI 1.
11) Graphical purlin representation does not depict the size or the orientation of the purlin along the top and/or bottom chord.

**LOAD CASE(S)** Standard

| Job | Truss | Truss Type | Qty | Ply | |
|---|---|---|---|---|---|
| 23090033 - Elev B | A6 | Piggyback Base | 3 | 1 | Job Reference (optional) |



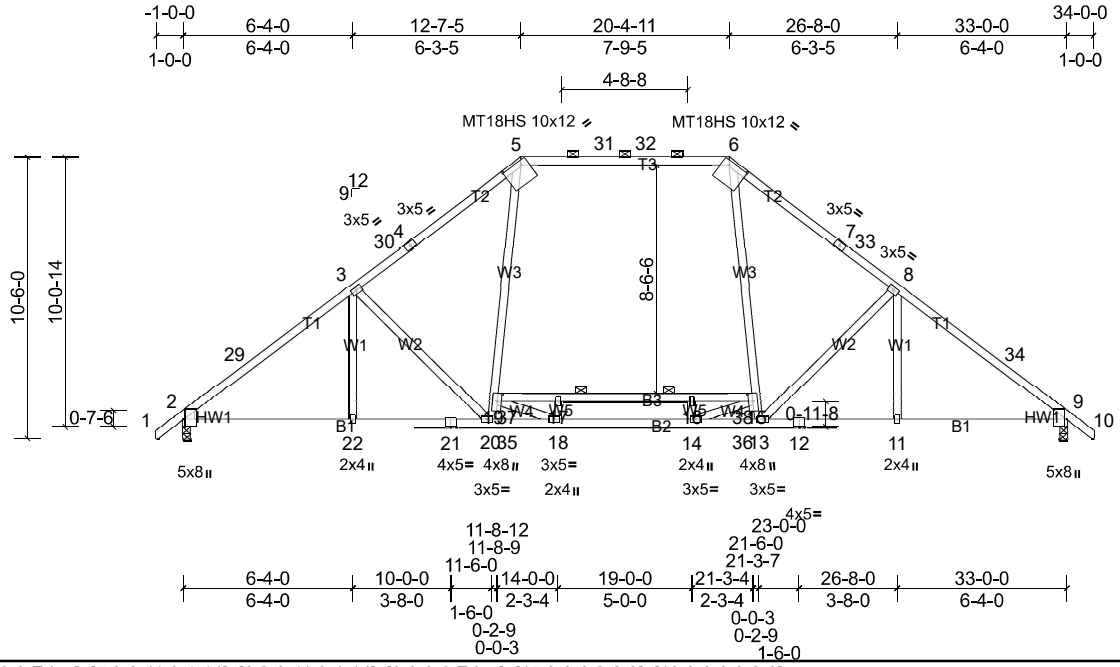


Scale = 1:86

Plate Offsets (X, Y): [2:0-3-8,Edge], [5:0-8-11,0-1-14], [6:0-8-11,0-1-14], [9:0-3-8,Edge], [15:0-3-8,0-2-0], [19:0-3-8,0-2-0]

| Loading | (psf) | Spacing | 2-0-0 | CSI | | DEFL | in | (loc) | l/defl | L/d | PLATES | GRIP |
|---|---|---|---|---|---|---|---|---|---|---|---|---|
| TCLL (roof) | 20.0 | Plate Grip DOL | 1.15 | TC | 0.95 | Vert(LL) | -0.52 | 20-22 | >762 | 240 | MT20 | 244/190 |
| Snow (Pf/Pg) | 18.9/20.0 | Lumber DOL | 1.15 | BC | 0.94 | Vert(CT) | -0.61 | 20-22 | >645 | 180 | MT18HS | 244/190 |
| TCDL | 10.0 | Rep Stress Incr | YES | WB | 0.73 | Horz(CT) | 0.11 | 9 | n/a | n/a | | |
| BCLL | 0.0* | Code | IRC2018/TPI2014 | Matrix-MSH | | | | | | | | |
| BCDL | 10.0 | | | | | | | | | | Weight: 199 lb | FT = 20% |

**LUMBER**

TOP CHORD 2x4 SP No.2 *Except* T3:2x4 SP No.1
BOT CHORD 2x4 SP No.2
WEBS 2x4 SP No.3 *Except* W3:2x4 SP No.2
WEDGE Left: 2x4 SP No.3
Right: 2x4 SP No.3

**BRACING**

TOP CHORD Structural wood sheathing directly applied, except
2-0-0 oc purlins (2-2-0 max.): 5-6.
BOT CHORD Rigid ceiling directly applied or 2-2-0 oc bracing, Except:
10-0-0 oc bracing: 18-20,13-14.
4-11-0 oc bracing: 15-19

MiTek recommends that Stabilizers and required cross bracing be installed during truss erection, in accordance with Stabilizer Installation guide.

**REACTIONS** (lb/size) 2=1400/0-3-8, (min. 0-2-3), 9=1400/0-3-8, (min. 0-2-3)
Max Horiz 2=-192 (LC 11)
Max Grav 2=1869 (LC 25), 9=1869 (LC 26)

**FORCES** (lb) - Max. Comp./Max. Ten. - All forces 250 (lb) or less except when shown.
TOP CHORD 2-29=-2546/0, 3-29=-2387/0, 3-30=-2230/0, 4-30=-2166/0, 4-5=-2140/0, 5-31=-1600/0, 31-32=-1600/0, 6-32=-1600/0, 6-7=-2140/0, 7-33=-2166/0, 8-33=-2230/0, 8-34=-2387/0, 9-34=-2546/0
BOT CHORD 2-22=-40/2081, 21-22=0/2081, 20-21=0/2081, 20-35=0/1744, 18-35=0/1744, 14-18=0/2807, 14-36=0/1636, 13-36=0/1636, 12-13=0/1960, 11-12=0/1960, 9-11=0/1960, 19-37=-1396/0, 17-37=-1396/0, 16-17=-1396/0, 16-38=-1396/0, 15-38=-1396/0
WEBS 3-20=-480/152, 19-20=-12/468, 5-19=0/960, 6-15=0/960, 13-15=-12/467, 8-13=-480/153, 17-18=-277/25, 18-19=0/1473, 14-16=-277/24, 14-15=0/1473

**NOTES**

1) Unbalanced roof live loads have been considered for this design.
2) Wind: ASCE 7-16; Vult=130mph (3-second gust) Vasd=103mph; TCDL=6.0psf; BCDL=6.0psf; h=25ft; Cat. II; Exp B; Enclosed; MWFRS (envelope) and C-C Exterior(2E) -0-11-7 to 2-4-3, Interior (1) 2-4-3 to 12-7-5, Exterior(2R) 12-7-5 to 17-3-5, Interior (1) 17-3-5 to 20-4-11, Exterior(2R) 20-4-11 to 25-0-11, Interior (1) 25-0-11 to 33-11-7 zone; cantilever left and right exposed ; end vertical left and right exposed;C-C for members and forces & MWFRS for reactions shown; Lumber DOL=1.60 plate grip DOL=1.33
3) TCLL: ASCE 7-16; Pr=20.0 psf (roof LL: Lum DOL=1.15 Plate DOL=1.15); Pg=20.0 psf; Pf=18.9 psf (Lum DOL=1.15 Plate DOL=1.15); Is=1.0; Rough Cat B; Fully Exp.; Ce=0.9; Cs=1.00; Ct=1.10, Lu=50-0-0; Min. flat roof snow load governs. Rain surcharge applied to all exposed surfaces with slopes less than 0.500/12 in accordance with IBC 1608.3.4.
4) This truss has been designed for greater of min roof live load of 12.0 psf or 2.00 times flat roof load of 13.9 psf on overhangs non-concurrent with other live loads.
5) 200.0lb AC unit load placed on the bottom chord, 16-6-0 from left end, supported at two points, 5-0-0 apart.
6) Provide adequate drainage to prevent water ponding.
7) All plates are MT20 plates unless otherwise indicated.
8) All plates are 3x5 MT20 unless otherwise indicated.
9) * This truss has been designed for a live load of 20.0psf on the bottom chord in all areas where a rectangle 3-06-00 tall by 2-00-00 wide will fit between the bottom chord and any other members, with BCDL = 10.0psf.
10) This truss is designed in accordance with the 2018 International Residential Code sections R502.11.1 and R802.10.2 and referenced standard ANSI/TPI 1.
11) Graphical purlin representation does not depict the size or the orientation of the purlin along the top and/or bottom chord.

**LOAD CASE(S)** Standard

| Job | Truss | Truss Type | Qty | Ply | |
|---|---|---|---|---|---|
| 23090033 - Elev B | A7 | Half Hip Girder | 1 | 1 | Job Reference (optional) |



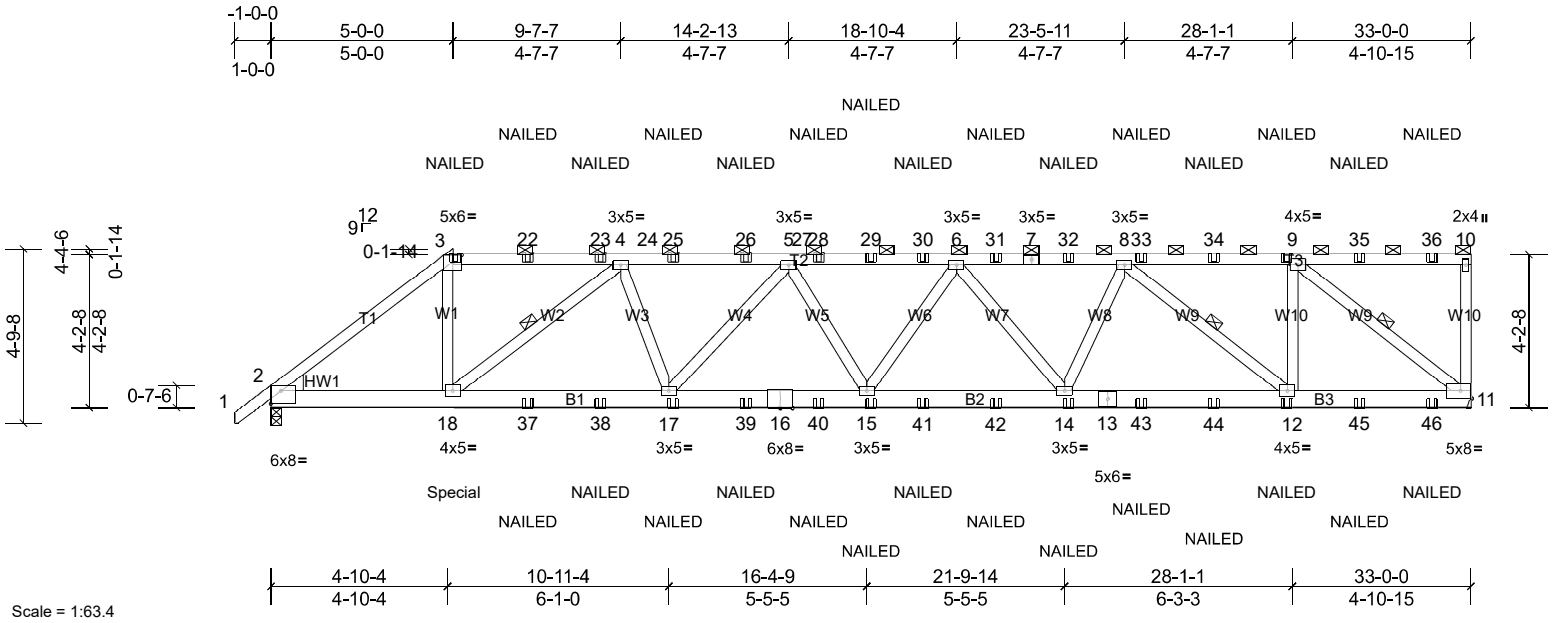


Plate Offsets (X, Y): [2:Edge,0-4-2], [3:0-3-0,0-2-2]

| Loading | (psf) | Spacing | 2-0-0 | CSI | | DEFL | in | (loc) | l/defl | L/d | PLATES | GRIP |
|---|---|---|---|---|---|---|---|---|---|---|---|---|
| TCLL (roof) | 20.0 | Plate Grip DOL | 1.15 | TC | 0.77 | Vert(LL) | -0.22 | 15 | >999 | 240 | MT20 | 244/190 |
| Snow (Pf/Pg) | 18.9/20.0 | Lumber DOL | 1.15 | BC | 0.89 | Vert(CT) | -0.44 | 15 | >902 | 180 | | |
| TCDL | 10.0 | Rep Stress Incr | NO | WB | 0.83 | Horz(CT) | 0.10 | 11 | n/a | n/a | | |
| BCLL | 0.0* | Code | IRC2018/TPI2014 | Matrix-MSH | | | | | | | | |
| BCDL | 10.0 | | | | | | | | | | Weight: 210 lb | FT = 20% |

**LUMBER**

TOP CHORD 2x4 SP No.2 *Except* T2:2x4 SP No.1
BOT CHORD 2x6 SP 2400F 2.0E *Except* B3:2x6 SP No.2
WEBS 2x4 SP No.3
WEDGE Left: 2x6 SP No.2

**BRACING**

TOP CHORD Structural wood sheathing directly applied or 2-11-1 oc purlins, except end verticals, and 2-0-0 oc purlins (2-4-11 max.): 3-10.
BOT CHORD Rigid ceiling directly applied or 10-0-0 oc bracing.
WEBS 1 Row at midpt 4-18, 8-12, 9-11

MiTek recommends that Stabilizers and required cross bracing be installed during truss erection, in accordance with Stabilizer Installation guide.

**REACTIONS** (lb/size) 2=2129/0-3-8, (min. 0-1-15), 11=2041/ Mechanical, (min. 0-1-8)
Max Horiz 2=119 (LC 10)
Max Uplift 2=-209 (LC 8), 11=-239 (LC 8)
Max Grav 2=2374 (LC 2), 11=2304 (LC 2)

**FORCES** (lb) - Max. Comp./Max. Ten. - All forces 250 (lb) or less except when shown.

TOP CHORD 2-3=-3453/366, 3-22=-2659/306, 22-23=-2659/306, 4-23=-2661/307, 4-24=-4529/465, 24-25=-4529/465, 25-26=-4529/465, 5-26=-4529/465, 5-27=-5028/502, 27-28=-5028/502, 28-29=-5028/502, 29-30=-5028/502, 6-30=-5028/502, 6-31=-4452/432, 7-31=-4452/432, 7-32=-4452/432, 8-32=-4452/432, 8-33=-2532/269, 33-34=-2532/269, 9-34=-2532/269
BOT CHORD 2-18=-352/2734, 18-37=-519/4250, 37-38=-519/4250, 17-38=-519/4250, 17-39=-587/4977, 16-39=-587/4977, 16-40=-587/4977, 15-40=-587/4977, 15-41=-572/4921, 41-42=-572/4921, 14-42=-572/4921, 13-14=-466/4067, 13-43=-466/4067, 43-44=-466/4067, 12-44=-466/4067, 12-45=-279/2519, 45-46=-279/2519, 11-46=-279/2519
WEBS 3-18=-105/1702, 4-18=-2076/257, 4-17=0/866, 5-17=-703/141, 6-14=-779/169, 8-14=-8/963, 8-12=-2011/242, 9-12=-21/1528, 9-11=-3195/321

**NOTES**

1) Unbalanced roof live loads have been considered for this design.
2) Wind: ASCE 7-16; Vult=130mph (3-second gust) Vasd=103mph; TCDL=6.0psf; BCDL=6.0psf; h=25ft; Cat. II; Exp B; Enclosed; MWFRS (envelope); cantilever left and right exposed ; end vertical left and right exposed; Lumber DOL=1.60 plate grip DOL=1.33
3) TCLL: ASCE 7-16; Pr=20.0 psf (roof LL: Lum DOL=1.15 Plate DOL=1.15); Pg=20.0 psf; Pf=18.9 psf (Lum DOL=1.15 Plate DOL=1.15); Is=1.0; Rough Cat B; Fully Exp.; Ce=0.9; Cs=1.00; Ct=1.10, Lu=50-0-0; Min. flat roof snow load governs. Rain surcharge applied to all exposed surfaces with slopes less than 0.500/12 in accordance with IBC 1608.3.4.
4) Unbalanced snow loads have been considered for this design.
5) This truss has been designed for greater of min roof live load of 12.0 psf or 2.00 times flat roof load of 13.9 psf on overhangs non-concurrent with other live loads.
6) Provide adequate drainage to prevent water ponding.
7) All plates are 3x5 MT20 unless otherwise indicated.
8) * This truss has been designed for a live load of 20.0psf on the bottom chord in all areas where a rectangle 3-06-00 tall by 2-00-00 wide will fit between the bottom chord and any other members.
9) Refer to girder(s) for truss to truss connections.
10) Provide mechanical connection (by others) of truss to bearing plate capable of withstanding 239 lb uplift at joint 11.
11) One H2.5A Simpson Strong-Tie connectors recommended to connect truss to bearing walls due to UPLIFT at jt(s) 2. This connection is for uplift only and does not consider lateral forces.
12) This truss is designed in accordance with the 2018 International Residential Code sections R502.11.1 and R802.10.2 and referenced standard ANSI/TPI 1.
13) Graphical purlin representation does not depict the size or the orientation of the purlin along the top and/or bottom chord.
14) "NAILED" indicates 3-10d (0.148"x3") or 3-12d (0.148"x3.25") toe-nails per NDS guidlines.
15) Hanger(s) or other connection device(s) shall be provided sufficient to support concentrated load(s) 407 lb down and 60 lb up at 5-0-0 on bottom chord. The design/selection of such connection device(s) is the responsibility of others.

**LOAD CASE(S)** Standard

1) Dead + Snow (balanced): Lumber Increase=1.15, Plate Increase=1.15
   Uniform Loads (lb/ft)
   Vert: 1-3=-48, 3-10=-58, 11-19=-20
   Concentrated Loads (lb)
   Vert: 3=-49, 18=-378, 17=-40, 15=-40, 14=-40, 12=-40, 9=-45, 22=-45, 23=-45, 25=-45, 26=-45, 28=-45, 29=-45, 30=-45, 31=-45, 32=-45, 33=-45, 34=-45, 35=-45, 36=-47, 37=-40, 38=-40, 39=-40, 40=-40, 41=-40, 42=-40, 43=-40, 44=-40, 45=-40, 46=-41

| Job | Truss | Truss Type | Qty | Ply | |
|---|---|---|---|---|---|
| 23090033 - Elev B | A8 | Hip | 1 | 1 | Job Reference (optional) |



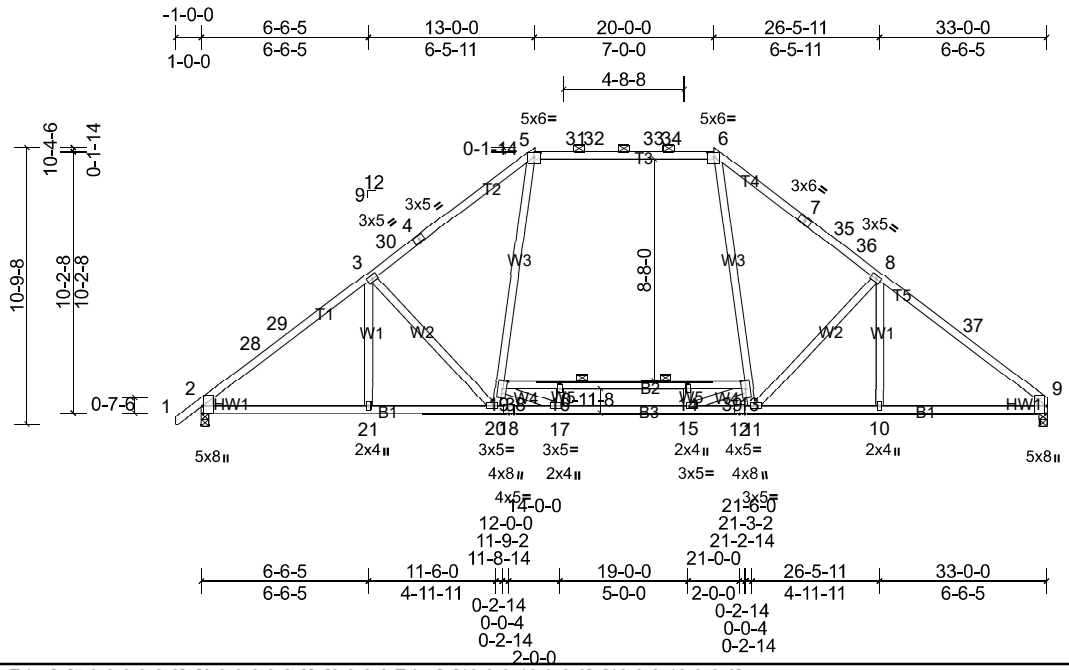


Scale = 1:89.9

Plate Offsets (X, Y): [2:0-3-8,Edge], [5:0-3-0,0-2-2], [6:0-3-0,0-2-2], [9:0-3-8,Edge], [13:0-3-12,0-2-0], [19:0-3-12,0-2-0]

| Loading | (psf) | Spacing | 2-0-0 | CSI | | DEFL | in | (loc) | l/defl | L/d | PLATES | GRIP |
|---|---|---|---|---|---|---|---|---|---|---|---|---|
| TCLL (roof) | 20.0 | Plate Grip DOL | 1.15 | TC | 0.95 | Vert(LL) | -0.48 | 20-21 | >830 | 240 | MT20 | 244/190 |
| Snow (Pf/Pg) | 18.9/20.0 | Lumber DOL | 1.15 | BC | 0.96 | Vert(CT) | -0.56 | 20-21 | >703 | 180 | | |
| TCDL | 10.0 | Rep Stress Incr | YES | WB | 0.69 | Horz(CT) | 0.11 | 9 | n/a | n/a | | |
| BCLL | 0.0* | Code | IRC2018/TPI2014 | Matrix-MSH | | | | | | | | |
| BCDL | 10.0 | | | | | | | | | | Weight: 198 lb | FT = 20% |

**LUMBER**

TOP CHORD 2x4 SP No.1 *Except* T3:2x4 SP 2400F 2.0E, T1,T5:2x4 SP No.2
BOT CHORD 2x4 SP No.1 *Except* B3,B2:2x4 SP No.2
WEBS 2x4 SP No.3 *Except* W3:2x4 SP No.2
WEDGE Left: 2x4 SP No.3
Right: 2x4 SP No.3

**BRACING**

TOP CHORD Structural wood sheathing directly applied, except
2-0-0 oc purlins (5-5-14 max.): 5-6.
BOT CHORD Rigid ceiling directly applied or 10-0-0 oc bracing, Except:
2-2-0 oc bracing: 15-17.
4-11-0 oc bracing: 13-19

MiTek recommends that Stabilizers and required cross bracing be installed during truss erection, in accordance with Stabilizer Installation guide.

**REACTIONS** (lb/size) 2=1396/0-3-8, (min. 0-2-5), 9=1349/0-3-8, (min. 0-2-5)
Max Horiz 2=191 (LC 14)
Max Grav 2=1984 (LC 48), 9=1942 (LC 50)

**FORCES** (lb) - Max. Comp./Max. Ten. - All forces 250 (lb) or less except when shown.

TOP CHORD 2-28=-2746/0, 28-29=-2674/0, 3-29=-2561/0, 3-30=-2399/0, 4-30=-2311/0, 4-5=-2240/0, 5-31=-1655/6, 31-32=-1655/6, 32-33=-1655/6, 33-34=-1655/6, 6-34=-1655/6, 6-7=-2235/0, 7-35=-2269/0, 35-36=-2319/0, 8-36=-2400/0, 8-37=-2566/0, 9-37=-2753/0

BOT CHORD 2-21=-47/2242, 20-21=0/2242, 18-20=0/1806, 17-18=0/1806, 15-17=0/2862, 12-15=0/1694, 11-12=0/1694, 10-11=0/2125, 9-10=0/2125, 19-38=-1404/0, 16-38=-1404/0, 14-16=-1404/0, 14-39=-1404/0, 13-39=-1404/0

WEBS 3-20=-581/160, 19-20=-21/554, 5-19=0/1050, 6-13=0/1053, 11-13=-24/557, 8-11=-588/162, 16-17=-275/23, 17-19=0/1458, 14-15=-276/23, 13-15=0/1460

**NOTES**

1) Unbalanced roof live loads have been considered for this design.
2) Wind: ASCE 7-16; Vult=130mph (3-second gust) Vasd=103mph; TCDL=6.0psf; BCDL=6.0psf; h=25ft; Cat. II; Exp B; Enclosed; MWFRS (envelope) and C-C Exterior(2E) -0-11-7 to 2-4-3, Interior (1) 2-4-3 to 13-0-0, Exterior(2R) 13-0-0 to 17-8-0, Interior (1) 17-8-0 to 20-0-0, Exterior(2R) 20-0-0 to 24-8-0, Interior (1) 24-8-0 to 33-0-0 zone; cantilever left and right exposed ; end vertical left and right exposed;C-C for members and forces & MWFRS for reactions shown; Lumber DOL=1.60 plate grip DOL=1.33
3) TCLL: ASCE 7-16; Pr=20.0 psf (roof LL: Lum DOL=1.15 Plate DOL=1.15); Pg=20.0 psf; Pf=18.9 psf (Lum DOL=1.15 Plate DOL=1.15); Is=1.0; Rough Cat B; Fully Exp.; Ce=0.9; Cs=1.00; Ct=1.10, Lu=50-0-0; Min. flat roof snow load governs. Rain surcharge applied to all exposed surfaces with slopes less than 0.500/12 in accordance with IBC 1608.3.4.
4) Unbalanced snow loads have been considered for this design.
5) This truss has been designed for greater of min roof live load of 12.0 psf or 2.00 times flat roof load of 13.9 psf on overhangs non-concurrent with other live loads.
6) 200.0lb AC unit load placed on the bottom chord, 16-6-0 from left end, supported at two points, 5-0-0 apart.
7) Provide adequate drainage to prevent water ponding.
8) * This truss has been designed for a live load of 20.0psf on the bottom chord in all areas where a rectangle 3-06-00 tall by 2-00-00 wide will fit between the bottom chord and any other members, with BCDL = 10.0psf.
9) This truss is designed in accordance with the 2018 International Residential Code sections R502.11.1 and R802.10.2 and referenced standard ANSI/TPI 1.
10) Graphical purlin representation does not depict the size or the orientation of the purlin along the top and/or bottom chord.

**LOAD CASE(S)** Standard

| Job | Truss | Truss Type | Qty | Ply | |
|---|---|---|---|---|---|
| 23090033 - Elev B | A9 | Piggyback Base | 2 | 1 | Job Reference (optional) |



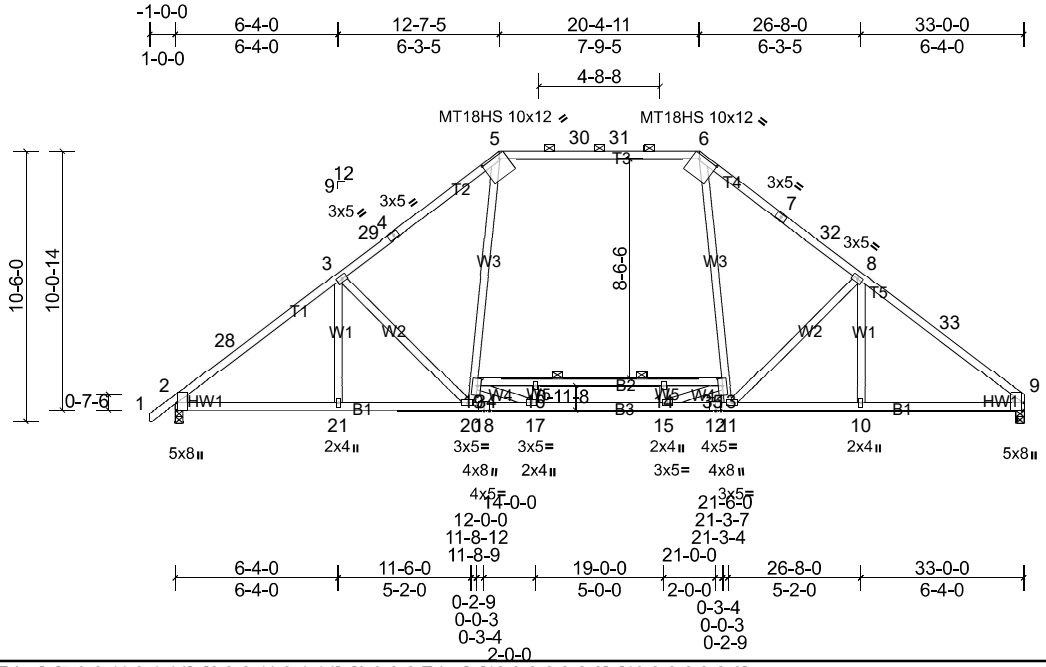


Scale = 1:89.6

Plate Offsets (X, Y): [2:0-3-8,Edge], [5:0-8-11,0-1-14], [6:0-8-11,0-1-14], [9:0-3-8,Edge], [13:0-3-8,0-2-0], [19:0-3-8,0-2-0]

| Loading | (psf) | Spacing | 2-0-0 | CSI | | DEFL | in | (loc) | l/defl | L/d | PLATES | GRIP |
|---|---|---|---|---|---|---|---|---|---|---|---|---|
| TCLL (roof) | 20.0 | Plate Grip DOL | 1.15 | TC | 0.94 | Vert(LL) | -0.52 | 10-11 | >759 | 240 | MT20 | 244/190 |
| Snow (Pf/Pg) | 18.9/20.0 | Lumber DOL | 1.15 | BC | 0.98 | Vert(CT) | -0.62 | 10-11 | >641 | 180 | MT18HS | 244/190 |
| TCDL | 10.0 | Rep Stress Incr | YES | WB | 0.74 | Horz(CT) | 0.11 | 9 | n/a | n/a | | |
| BCLL | 0.0* | Code | IRC2018/TPI2014 | Matrix-MSH | | | | | | | | |
| BCDL | 10.0 | | | | | | | | | | Weight: 197 lb | FT = 20% |

**LUMBER**

TOP CHORD 2x4 SP No.2 *Except* T3:2x4 SP No.1
BOT CHORD 2x4 SP No.2
WEBS 2x4 SP No.3 *Except* W3:2x4 SP No.2
WEDGE Left: 2x4 SP No.3
Right: 2x4 SP No.3

**BRACING**

TOP CHORD Structural wood sheathing directly applied, except
2-0-0 oc purlins (2-2-0 max.): 5-6.
BOT CHORD Rigid ceiling directly applied or 2-2-0 oc bracing. Except:
4-11-0 oc bracing: 13-19

MiTek recommends that Stabilizers and required cross bracing be installed during truss erection, in accordance with Stabilizer Installation guide.

**REACTIONS** (lb/size) 2=1401/0-3-8, (min. 0-2-3),
9=1354/0-3-8, (min. 0-2-2)
Max Horiz 2=187 (LC 10)
Max Grav 2=1871 (LC 25), 9=1818 (LC 26)

**FORCES** (lb) - Max. Comp./Max. Ten. - All forces 250 (lb) or less except when shown.

TOP CHORD 2-28=-2550/0, 3-28=-2391/0, 3-29=-2234/0, 4-29=-2170/0, 4-5=-2144/0, 5-30=-1603/0, 30-31=-1603/0, 6-31=-1603/0, 6-7=-2142/0, 7-32=-2142/0, 8-32=-2235/0, 8-33=-2395/0, 9-33=-2554/0
BOT CHORD 2-21=-47/2077, 20-21=0/2077, 18-20=0/1739, 17-18=0/1739, 15-17=0/2804, 12-15=0/1640, 11-12=0/1640, 10-11=0/1967, 9-10=0/1967, 19-34=-1397/0, 16-34=-1397/0, 14-16=-1397/0, 14-35=-1397/0, 13-35=-1397/0
WEBS 3-20=-479/152, 8-11=-486/153, 19-20=-12/470, 5-19=0/962, 6-13=0/963, 11-13=-16/470, 16-17=-278/25, 17-19=0/1475, 14-15=-277/24, 13-15=0/1473

**NOTES**

1) Unbalanced roof live loads have been considered for this design.
2) Wind: ASCE 7-16; Vult=130mph (3-second gust) Vasd=103mph; TCDL=6.0psf; BCDL=6.0psf; h=25ft; Cat. II; Exp B; Enclosed; MWFRS (envelope) and C-C Exterior(2E) -0-11-7 to 2-4-3, Interior (1) 2-4-3 to 12-7-5, Exterior(2R) 12-7-5 to 17-3-5, Interior (1) 17-3-5 to 20-4-11, Exterior(2R) 20-4-11 to 25-0-11, Interior (1) 25-0-11 to 33-0-0 zone; cantilever left and right exposed ; end vertical left and right exposed;C-C for members and forces & MWFRS for reactions shown; Lumber DOL=1.60 plate grip DOL=1.33
3) TCLL: ASCE 7-16; Pr=20.0 psf (roof LL: Lum DOL=1.15 Plate DOL=1.15); Pg=20.0 psf; Pf=18.9 psf (Lum DOL=1.15 Plate DOL=1.15); Is=1.0; Rough Cat B; Fully Exp.; Ce=0.9; Cs=1.00; Ct=1.10, Lu=50-0-0; Min. flat roof snow load governs. Rain surcharge applied to all exposed surfaces with slopes less than 0.500/12 in accordance with IBC 1608.3.4.
4) This truss has been designed for greater of min roof live load of 12.0 psf or 2.00 times flat roof load of 13.9 psf on overhangs non-concurrent with other live loads.
5) 200.0lb AC unit load placed on the bottom chord, 16-6-0 from left end, supported at two points, 5-0-0 apart.
6) Provide adequate drainage to prevent water ponding.
7) All plates are MT20 plates unless otherwise indicated.
8) All plates are 3x5 MT20 unless otherwise indicated.
9) * This truss has been designed for a live load of 20.0psf on the bottom chord in all areas where a rectangle 3-06-00 tall by 2-00-00 wide will fit between the bottom chord and any other members, with BCDL = 10.0psf.
10) This truss is designed in accordance with the 2018 International Residential Code sections R502.11.1 and R802.10.2 and referenced standard ANSI/TPI 1.
11) Graphical purlin representation does not depict the size or the orientation of the purlin along the top and/or bottom chord.

**LOAD CASE(S)** Standard

| Job | Truss | Truss Type | Qty | Ply | |
|---|---|---|---|---|---|
| 23090033 - Elev B | A10 | Hip | 1 | 1 | Job Reference (optional) |



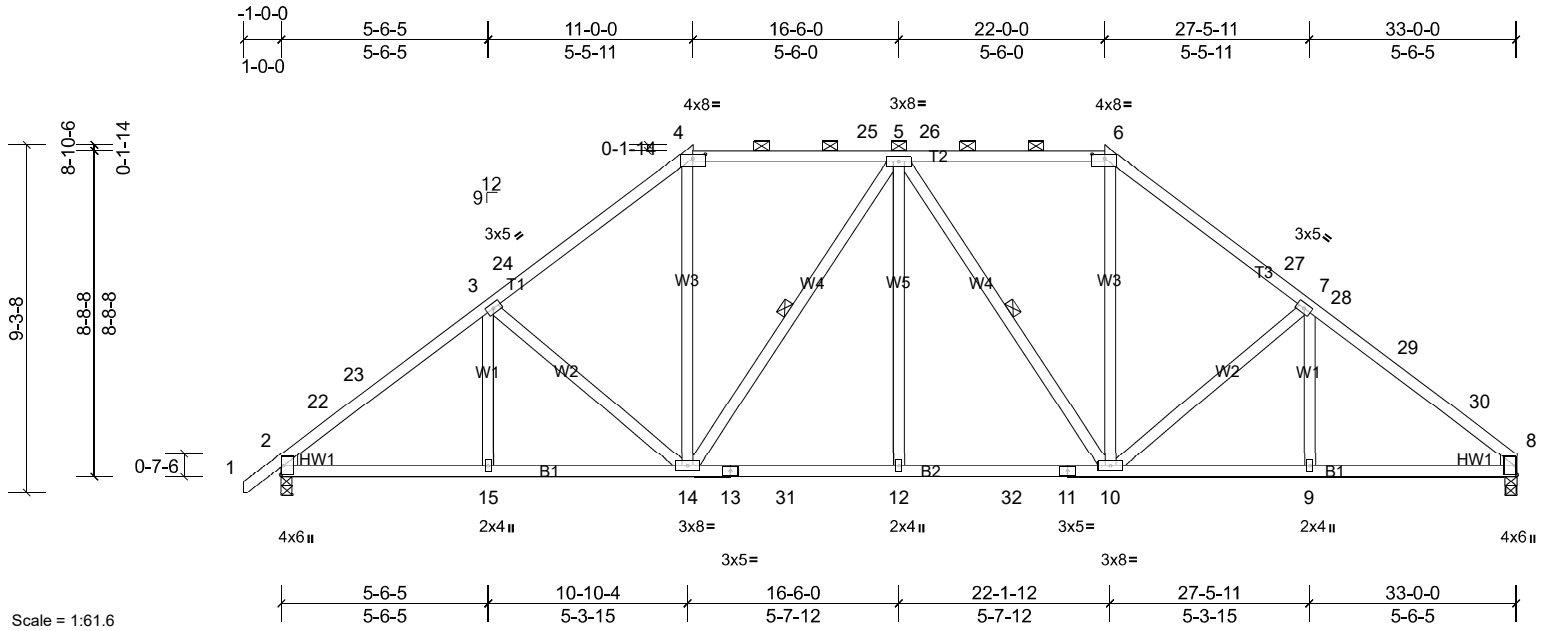


Scale = 1:61.6

Plate Offsets (X, Y): [4:0-4-0,0-1-6], [6:0-4-0,0-1-6]

| Loading | (psf) | Spacing | 2-0-0 | CSI | | DEFL | in | (loc) | l/defl | L/d | PLATES | GRIP |
|---|---|---|---|---|---|---|---|---|---|---|---|---|
| TCLL (roof) | 20.0 | Plate Grip DOL | 1.15 | TC | 0.67 | Vert(LL) | -0.11 | 10-12 | >999 | 240 | MT20 | 244/190 |
| Snow (Pf/Pg) | 18.9/20.0 | Lumber DOL | 1.15 | BC | 0.73 | Vert(CT) | -0.19 | 10-12 | >999 | 180 | | |
| TCDL | 10.0 | Rep Stress Incr | YES | WB | 0.46 | Horz(CT) | 0.08 | 8 | n/a | n/a | | |
| BCLL | 0.0* | Code | IRC2018/TPI2014 | Matrix-MSH | | | | | | | | |
| BCDL | 10.0 | | | | | | | | | | Weight: 207 lb | FT = 20% |

**LUMBER**

TOP CHORD 2x4 SP No.2
BOT CHORD 2x4 SP No.2
WEBS 2x4 SP No.3
WEDGE Left: 2x4 SP No.3
Right: 2x4 SP No.3

**BRACING**

TOP CHORD Structural wood sheathing directly applied or 3-7-9 oc purlins, except 2-0-0 oc purlins (4-7-7 max.): 4-6.
BOT CHORD Rigid ceiling directly applied or 10-0-0 oc bracing.
WEBS 1 Row at midpt 5-14, 5-10

MiTek recommends that Stabilizers and required cross bracing be installed during truss erection, in accordance with Stabilizer Installation guide.

**REACTIONS** (lb/size) 2=1218/0-3-8, (min. 0-1-14), 8=1172/0-3-8, (min. 0-1-13)
Max Horiz 2=162 (LC 14)
Max Grav 2=1579 (LC 46), 8=1539 (LC 46)

**FORCES** (lb) - Max. Comp./Max. Ten. - All forces 250 (lb) or less except when shown.

TOP CHORD 2-22=-2142/68, 22-23=-2119/75, 3-23=-1957/98, 3-24=-1749/119, 4-24=-1619/154, 4-25=-1292/169, 5-25=-1294/169, 5-26=-1294/167, 6-26=-1292/168, 6-27=-1620/159, 7-27=-1750/124, 7-28=-1938/106, 28-29=-1960/103, 29-30=-2048/85, 8-30=-2146/76
BOT CHORD 2-15=-91/1705, 14-15=-46/1705, 13-14=0/1544, 13-31=0/1544, 12-31=0/1544, 12-32=0/1544, 11-32=0/1544, 10-11=0/1544, 9-10=-19/1639, 8-9=-19/1639
WEBS 3-14=-509/100, 4-14=0/713, 5-14=-464/80, 5-12=0/322, 5-10=-464/80, 6-10=0/714, 7-10=-514/101

**NOTES**

1) Unbalanced roof live loads have been considered for this design.
2) Wind: ASCE 7-16; Vult=130mph (3-second gust) Vasd=103mph; TCDL=6.0psf; BCDL=6.0psf; h=25ft; Cat. II; Exp B; Enclosed; MWFRS (envelope) and C-C Exterior(2E) -0-11-7 to 2-4-3, Interior (1) 2-4-3 to 11-0-0, Exterior(2R) 11-0-0 to 15-8-0, Interior (1) 15-8-0 to 22-0-0, Exterior(2R) 22-0-0 to 26-8-0, Interior (1) 26-8-0 to 33-0-0 zone; cantilever left and right exposed ; end vertical left and right exposed;C-C for members and forces & MWFRS for reactions shown; Lumber DOL=1.60 plate grip DOL=1.33
3) TCLL: ASCE 7-16; Pr=20.0 psf (roof LL: Lum DOL=1.15 Plate DOL=1.15); Pg=20.0 psf; Pf=18.9 psf (Lum DOL=1.15 Plate DOL=1.15); Is=1.0; Rough Cat B; Fully Exp.; Ce=0.9; Cs=1.00; Ct=1.10, Lu=50-0-0; Min. flat roof snow load governs. Rain surcharge applied to all exposed surfaces with slopes less than 0.500/12 in accordance with IBC 1608.3.4.
4) Unbalanced snow loads have been considered for this design.
5) This truss has been designed for greater of min roof live load of 12.0 psf or 2.00 times flat roof load of 13.9 psf on overhangs non-concurrent with other live loads.
6) Provide adequate drainage to prevent water ponding.
7) * This truss has been designed for a live load of 20.0psf on the bottom chord in all areas where a rectangle 3-06-00 tall by 2-00-00 wide will fit between the bottom chord and any other members, with BCDL = 10.0psf.
8) This truss is designed in accordance with the 2018 International Residential Code sections R502.11.1 and R802.10.2 and referenced standard ANSI/TPI 1.
9) Graphical purlin representation does not depict the size or the orientation of the purlin along the top and/or bottom chord.

**LOAD CASE(S)** Standard

| Job | Truss | Truss Type | Qty | Ply | |
|---|---|---|---|---|---|
| 23090033 - Elev B | A11 | Hip | 1 | 1 | Job Reference (optional) |



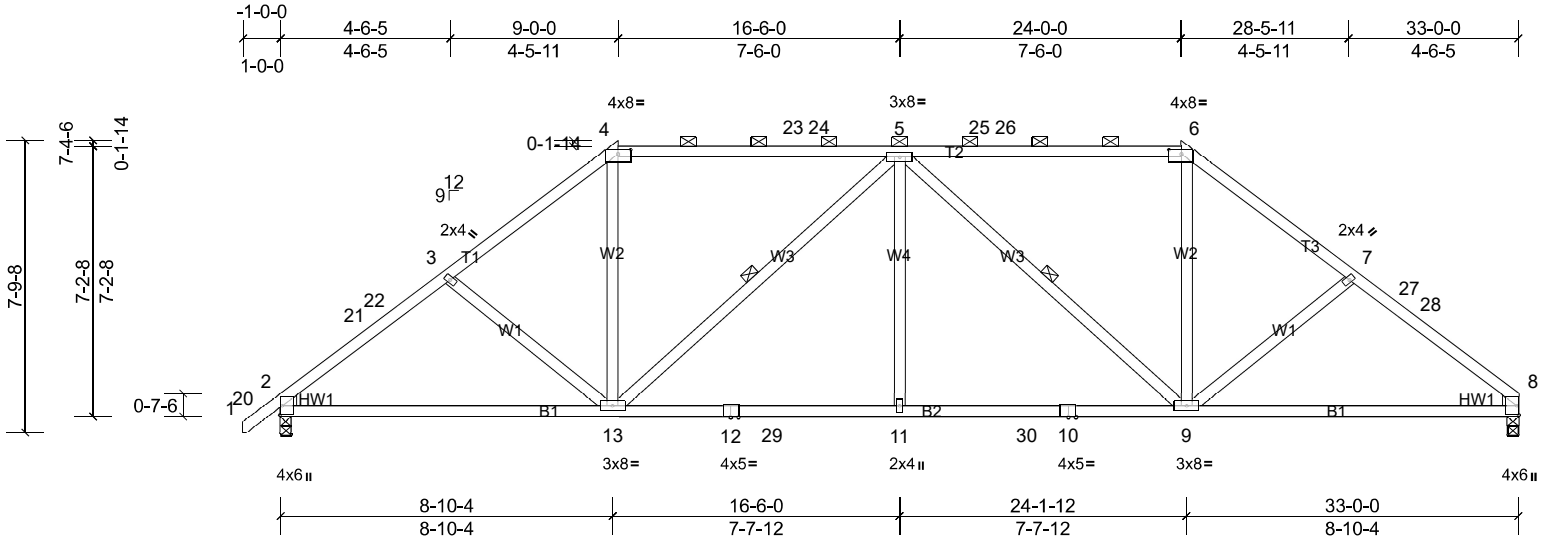


Scale = 1:61.4

Plate Offsets (X, Y): [4:0-4-0,0-1-6], [6:0-4-0,0-1-6]

| Loading | (psf) | Spacing | 2-0-0 | CSI | | DEFL | in | (loc) | l/defl | L/d | PLATES | GRIP |
|---|---|---|---|---|---|---|---|---|---|---|---|---|
| TCLL (roof) | 20.0 | Plate Grip DOL | 1.15 | TC | 0.93 | Vert(LL) | -0.16 | 11-13 | >999 | 240 | MT20 | 244/190 |
| Snow (Pf/Pg) | 18.9/20.0 | Lumber DOL | 1.15 | BC | 0.90 | Vert(CT) | -0.27 | 11-13 | >999 | 180 | | |
| TCDL | 10.0 | Rep Stress Incr | YES | WB | 0.42 | Horz(CT) | 0.09 | 8 | n/a | n/a | | |
| BCLL | 0.0* | Code | IRC2018/TPI2014 | Matrix-MSH | | | | | | | | |
| BCDL | 10.0 | | | | | | | | | | Weight: 184 lb | FT = 20% |

**LUMBER**
TOP CHORD 2x4 SP No.2 *Except* T2:2x4 SP No.1
BOT CHORD 2x4 SP No.2
WEBS 2x4 SP No.3
WEDGE Left: 2x4 SP No.3
Right: 2x4 SP No.3

**BRACING**
TOP CHORD Structural wood sheathing directly applied or 3-11-1 oc purlins, except 2-0-0 oc purlins (2-2-0 max.): 4-6.
BOT CHORD Rigid ceiling directly applied or 10-0-0 oc bracing.
WEBS 1 Row at midpt 5-13, 5-9

MiTek recommends that Stabilizers and required cross bracing be installed during truss erection, in accordance with Stabilizer Installation guide.

**REACTIONS** (lb/size) 2=1238/0-3-8, (min. 0-1-13), 8=1192/0-3-8, (min. 0-1-12)
Max Horiz 2=134 (LC 12)
Max Grav 2=1555 (LC 46), 8=1495 (LC 46)

**FORCES** (lb) - Max. Comp./Max. Ten. - All forces 250 (lb) or less except when shown.
TOP CHORD 2-21=-2005/92, 21-22=-1944/106, 3-22=-1932/117, 3-4=-1907/122, 4-23=-1512/140, 23-24=-1513/140, 5-24=-1514/139, 5-25=-1515/138, 25-26=-1513/138, 6-26=-1513/139, 6-7=-1909/129, 7-27=-1935/117, 27-28=-1939/108, 8-28=-2009/92
BOT CHORD 2-13=-90/1570, 12-13=0/2075, 12-29=0/2075, 11-29=0/2075, 11-30=0/2075, 10-30=0/2075, 9-10=0/2075, 8-9=-40/1548
WEBS 3-13=-317/119, 4-13=0/807, 5-13=-759/80, 5-11=0/414, 5-9=-758/80, 6-9=0/808, 7-9=-322/119

**NOTES**
1) Unbalanced roof live loads have been considered for this design.
2) Wind: ASCE 7-16; Vult=130mph (3-second gust) Vasd=103mph; TCDL=6.0psf; BCDL=6.0psf; h=25ft; Cat. II; Exp B; Enclosed; MWFRS (envelope) and C-C Exterior(2E) -0-11-7 to 2-4-3, Interior (1) 2-4-3 to 9-0-0, Exterior(2R) 9-0-0 to 13-8-0, Interior (1) 13-8-0 to 24-0-0, Exterior(2R) 24-0-0 to 28-7-1, Interior (1) 28-7-1 to 33-0-0 zone; cantilever left and right exposed ; end vertical left and right exposed;C-C for members and forces & MWFRS for reactions shown; Lumber DOL=1.60 plate grip DOL=1.33
3) TCLL: ASCE 7-16; Pr=20.0 psf (roof LL: Lum DOL=1.15 Plate DOL=1.15); Pg=20.0 psf; Pf=18.9 psf (Lum DOL=1.15 Plate DOL=1.15); Is=1.0; Rough Cat B; Fully Exp.; Ce=0.9; Cs=1.00; Ct=1.10, Lu=50-0-0; Min. flat roof snow load governs. Rain surcharge applied to all exposed surfaces with slopes less than 0.500/12 in accordance with IBC 1608.3.4.
4) Unbalanced snow loads have been considered for this design.
5) This truss has been designed for greater of min roof live load of 12.0 psf or 2.00 times flat roof load of 13.9 psf on overhangs non-concurrent with other live loads.
6) Provide adequate drainage to prevent water ponding.
7) * This truss has been designed for a live load of 20.0psf on the bottom chord in all areas where a rectangle 3-06-00 tall by 2-00-00 wide will fit between the bottom chord and any other members, with BCDL = 10.0psf.
8) This truss is designed in accordance with the 2018 International Residential Code sections R502.11.1 and R802.10.2 and referenced standard ANSI/TPI 1.
9) Graphical purlin representation does not depict the size or the orientation of the purlin along the top and/or bottom chord.

**LOAD CASE(S)** Standard

| Job | Truss | Truss Type | Qty | Ply | |
|---|---|---|---|---|---|
| 23090033 - Elev B | A12 | Hip | 1 | 1 | Job Reference (optional) |



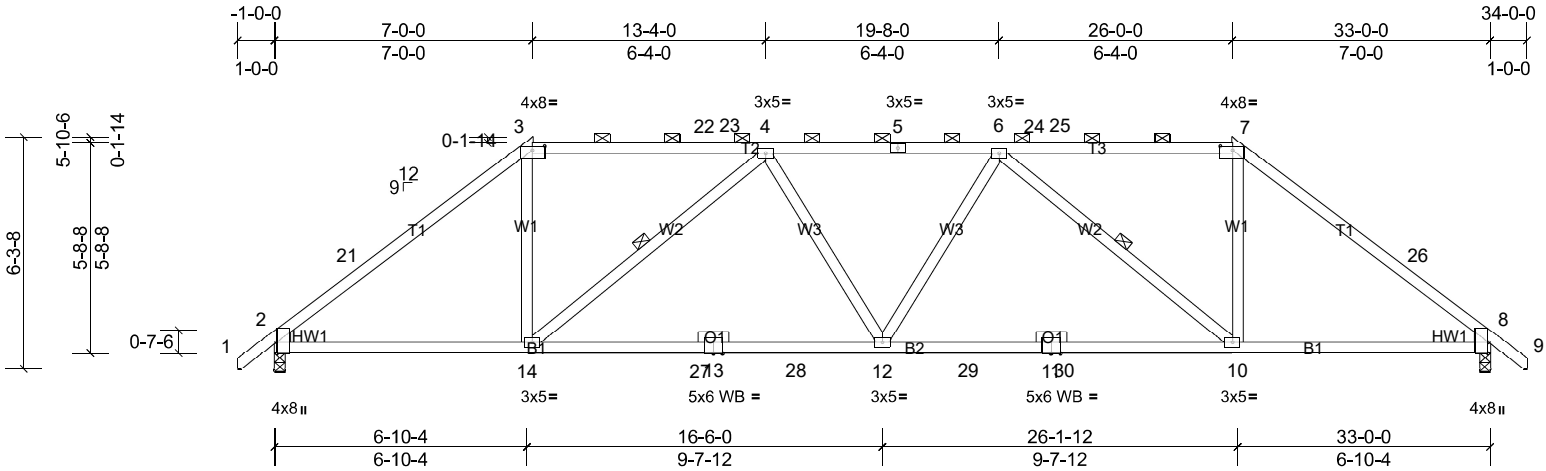


Scale = 1:62.6

Plate Offsets (X, Y): [2:0-3-8,Edge], [3:0-4-0,0-1-6], [7:0-4-0,0-1-6], [8:0-3-8,Edge]

| Loading | (psf) | Spacing | 2-0-0 | CSI | | DEFL | in | (loc) | l/defl | L/d | PLATES | GRIP |
|---|---|---|---|---|---|---|---|---|---|---|---|---|
| TCLL (roof) | 20.0 | Plate Grip DOL | 1.15 | TC | 0.97 | Vert(LL) | -0.28 | 12-14 | >999 | 240 | MT20 | 244/190 |
| Snow (Pf/Pg) | 18.9/20.0 | Lumber DOL | 1.15 | BC | 0.71 | Vert(CT) | -0.48 | 12-14 | >830 | 180 | | |
| TCDL | 10.0 | Rep Stress Incr | YES | WB | 0.46 | Horz(CT) | 0.10 | 8 | n/a | n/a | | |
| BCLL | 0.0* | Code | IRC2018/TPI2014 | Matrix-MSH | | | | | | | | |
| BCDL | 10.0 | | | | | | | | | | Weight: 169 lb | FT = 20% |

**LUMBER**

TOP CHORD 2x4 SP No.2
BOT CHORD 2x4 SP No.1 *Except* B2:2x4 SP 2400F 2.0E
WEBS 2x4 SP No.3
OTHERS 2x4 SP No.3
WEDGE Left: 2x4 SP No.3
Right: 2x4 SP No.3

**BRACING**

TOP CHORD Structural wood sheathing directly applied, except
2-0-0 oc purlins (2-7-4 max.): 3-7.
BOT CHORD Rigid ceiling directly applied or 10-0-0 oc bracing.
WEBS 1 Row at midpt 4-14, 6-10

MiTek recommends that Stabilizers and required cross bracing be installed during truss erection, in accordance with Stabilizer Installation guide.

**REACTIONS** (lb/size) 2=1258/0-3-8, (min. 0-1-13),
8=1258/0-3-8, (min. 0-1-13)
Max Horiz 2=-111 (LC 13)
Max Grav 2=1533 (LC 45), 8=1533 (LC 45)

**FORCES** (lb) - Max. Comp./Max. Ten. - All forces 250 (lb) or less except when shown.

TOP CHORD 2-21=-2178/56, 3-21=-2149/89, 3-22=-1677/125, 22-23=-1678/124, 4-23=-1678/124, 4-5=-2676/90, 5-6=-2676/90, 6-24=-1678/124, 24-25=-1678/124, 7-25=-1677/125, 7-26=-2149/89, 8-26=-2178/56
BOT CHORD 2-14=-71/1703, 14-27=-7/2550, 13-27=-7/2550, 13-28=-7/2550, 12-28=-7/2550, 12-29=0/2550, 11-29=0/2550, 11-30=0/2550, 10-30=0/2550, 8-10=0/1703
WEBS 3-14=0/997, 4-14=-1165/91, 4-12=0/290, 6-12=0/290, 6-10=-1165/91, 7-10=0/997

**NOTES**

1) Unbalanced roof live loads have been considered for this design.
2) Wind: ASCE 7-16; Vult=130mph (3-second gust) Vasd=103mph; TCDL=6.0psf; BCDL=6.0psf; h=25ft; Cat. II; Exp B; Enclosed; MWFRS (envelope) and C-C Exterior(2E) -0-11-7 to 2-4-3, Interior (1) 2-4-3 to 7-0-0, Exterior(2R) 7-0-0 to 11-8-0, Interior (1) 11-8-0 to 26-0-0, Exterior(2R) 26-0-0 to 30-8-0, Interior (1) 30-8-0 to 33-11-7 zone; cantilever left and right exposed ; end vertical left and right exposed;C-C for members and forces & MWFRS for reactions shown; Lumber DOL=1.60 plate grip DOL=1.33
3) TCLL: ASCE 7-16; Pr=20.0 psf (roof LL: Lum DOL=1.15 Plate DOL=1.15); Pg=20.0 psf; Pf=18.9 psf (Lum DOL=1.15 Plate DOL=1.15); Is=1.0; Rough Cat B; Fully Exp.; Ce=0.9; Cs=1.00; Ct=1.10, Lu=50-0-0; Min. flat roof snow load governs. Rain surcharge applied to all exposed surfaces with slopes less than 0.500/12 in accordance with IBC 1608.3.4.
4) Unbalanced snow loads have been considered for this design.
5) This truss has been designed for greater of min roof live load of 12.0 psf or 2.00 times flat roof load of 13.9 psf on overhangs non-concurrent with other live loads.
6) Provide adequate drainage to prevent water ponding.
7) * This truss has been designed for a live load of 20.0psf on the bottom chord in all areas where a rectangle 3-06-00 tall by 2-00-00 wide will fit between the bottom chord and any other members, with BCDL = 10.0psf.
8) This truss is designed in accordance with the 2018 International Residential Code sections R502.11.1 and R802.10.2 and referenced standard ANSI/TPI 1.
9) Graphical purlin representation does not depict the size or the orientation of the purlin along the top and/or bottom chord.

**LOAD CASE(S)** Standard

| Job | Truss | Truss Type | Qty | Ply | |
|---|---|---|---|---|---|
| 23090033 - Elev B | B1 | Attic Structural Gable | 1 | 1 | Job Reference (optional) |



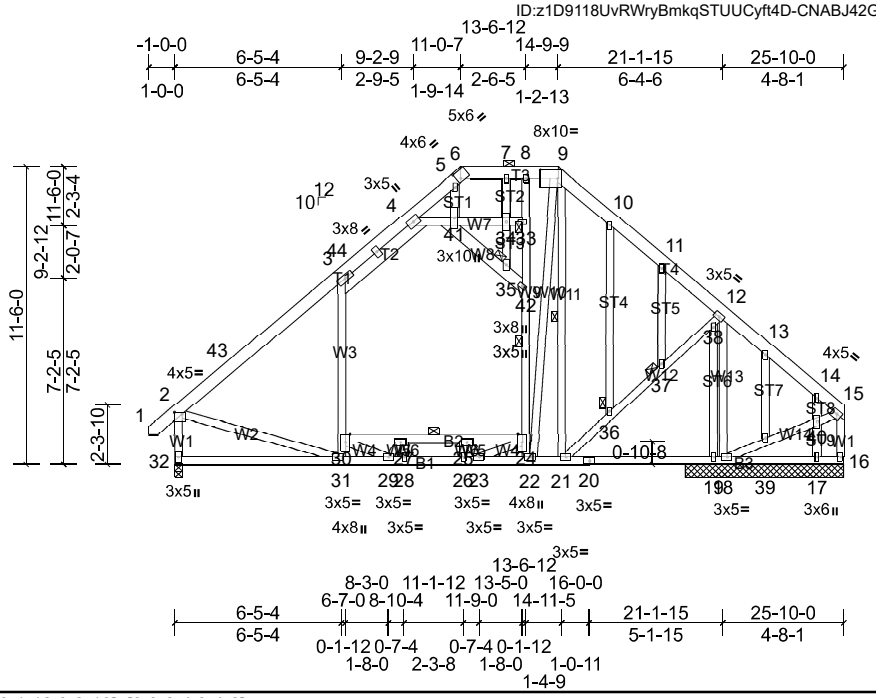


Scale = 1:89

Plate Offsets (X, Y): [2:0-3-8,0-0-12], [6:0-1-12,0-3-10], [9:0-8-4,0-4-0]

| Loading | (psf) | Spacing | 2-0-0 | CSI | | DEFL | in | (loc) | l/defl | L/d | PLATES | GRIP |
|---|---|---|---|---|---|---|---|---|---|---|---|---|
| TCLL (roof) | 20.0 | Plate Grip DOL | 1.15 | TC | 0.73 | Vert(LL) | -0.13 | 30 | >999 | 240 | MT20 | 244/190 |
| Snow (Pf/Pg) | 18.9/20.0 | Lumber DOL | 1.15 | BC | 0.57 | Vert(CT) | -0.26 | 31-32 | >935 | 180 | | |
| TCDL | 10.0 | Rep Stress Incr | YES | WB | 0.73 | Horz(CT) | 0.02 | 18 | n/a | n/a | | |
| BCLL | 0.0* | Code | IRC2018/TPI2014 | Matrix-MSH | | Attic | -0.07 | 24-30 | >999 | 360 | | |
| BCDL | 10.0 | | | | | | | | | | Weight: 302 lb | FT = 20% |

**LUMBER**

TOP CHORD 2x6 SP 2400F 2.0E
BOT CHORD 2x4 SP No.2 *Except* B2:2x4 SP No.3
WEBS 2x4 SP No.3 *Except* W9,W10,W11,W7:2x4 SP No.2, W8:2x6 SP No.2
OTHERS 2x4 SP No.3

**BRACING**

TOP CHORD Structural wood sheathing directly applied or 6-0-0 oc purlins, except end verticals, and 2-0-0 oc purlins (6-0-0 max.): 6-9.
BOT CHORD Rigid ceiling directly applied or 10-0-0 oc bracing. Except:
6-0-0 oc bracing: 24-30
WEBS 1 Row at midpt 24-33, 9-21
JOINTS 1 Brace at Jt(s): 33, 35, 36, 37

MiTek recommends that Stabilizers and required cross bracing be installed during truss erection, in accordance with Stabilizer Installation guide.

**REACTIONS** All bearings 6-1-8. except 32=0-3-8
(lb) - Max Horiz 32=236 (LC 10)
Max Uplift All uplift 100 (lb) or less at joint(s) 16, 17 except 18=-317 (LC 11)
Max Grav All reactions 250 (lb) or less at joint (s) 17, 18 except 16=1040 (LC 26), 19=384 (LC 33), 32=1430 (LC 26)

**FORCES** (lb) - Max. Comp./Max. Ten. - All forces 250 (lb) or less except when shown.
TOP CHORD 2-43=-1348/0, 3-43=-1175/0, 3-44=-1062/56, 4-44=-1046/84, 4-5=-899/102, 5-6=-792/124, 6-7=-807/133, 7-8=-807/133, 8-9=-844/138, 9-10=-1018/129, 10-11=-1079/109, 11-12=-1143/92, 12-13=-1058/142, 13-14=-1137/130, 14-15=-1035/86, 2-32=-1343/0, 15-16=-1035/79
BOT CHORD 31-32=-217/304, 29-31=-1/1157, 28-29=0/1555, 26-28=0/1555, 23-26=0/1555, 22-23=0/625, 21-22=0/858, 20-21=-93/841, 19-20=-93/841, 18-19=-93/841, 27-30=-655/0, 25-27=-744/0, 24-25=-365/44
WEBS 24-42=-61/277, 9-22=-16/462, 12-18=-376/61, 2-31=0/804, 18-39=-75/903, 39-40=-73/894, 15-40=-77/924, 34-35=-47/256, 29-30=0/598, 25-26=-39/334, 23-25=-743/9, 23-24=0/665

**NOTES**

1) Unbalanced roof live loads have been considered for this design.
2) Wind: ASCE 7-16; Vult=130mph (3-second gust) Vasd=103mph; TCDL=6.0psf; BCDL=6.0psf; h=25ft; Cat. II; Exp B; Enclosed; MWFRS (envelope) and C-C Exterior(2E) -0-9-13 to 2-2-3, Interior (1) 2-2-3 to 11-0-7, Exterior(2E) 11-0-7 to 14-9-9, Exterior(2R) 14-9-9 to 18-9-9, Interior (1) 18-9-9 to 25-8-4 zone; cantilever left and right exposed ; end vertical left and right exposed;C-C for members and forces & MWFRS for reactions shown; Lumber DOL=1.60 plate grip DOL=1.33
3) Truss designed for wind loads in the plane of the truss only. For studs exposed to wind (normal to the face), see Standard Industry Gable End Details as applicable, or consult qualified building designer as per ANSI/TPI 1.
4) TCLL: ASCE 7-16; Pr=20.0 psf (roof LL: Lum DOL=1.15 Plate DOL=1.15); Pg=20.0 psf; Pf=18.9 psf (Lum DOL=1.15 Plate DOL=1.15); Is=1.0; Rough Cat B; Fully Exp.; Ce=0.9; Cs=1.00; Ct=1.10, Lu=50-0-0; Min. flat roof snow load governs. Rain surcharge applied to all exposed surfaces with slopes less than 0.500/12 in accordance with IBC 1608.3.4.
5) This truss has been designed for greater of min roof live load of 12.0 psf or 2.00 times flat roof load of 13.9 psf on overhangs non-concurrent with other live loads.
6) Provide adequate drainage to prevent water ponding.
7) All plates are 2x4 MT20 unless otherwise indicated.
8) Gable studs spaced at 2-0-0 oc.
9) * This truss has been designed for a live load of 20.0psf on the bottom chord in all areas where a rectangle 3-06-00 tall by 2-00-00 wide will fit between the bottom chord and any other members.
10) Ceiling dead load (10.0 psf) on member(s). 3-4, 4-41, 34-41, 33-34
11) Bottom chord live load (40.0 psf) and additional bottom chord dead load (5.0 psf) applied only to room. 27-30, 25-27, 24-25
12) One H2.5A Simpson Strong-Tie connectors recommended to connect truss to bearing walls due to UPLIFT at jt(s) 18, 16, and 17. This connection is for uplift only and does not consider lateral forces.
13) This truss is designed in accordance with the 2018 International Residential Code sections R502.11.1 and R802.10.2 and referenced standard ANSI/TPI 1.
14) Graphical purlin representation does not depict the size or the orientation of the purlin along the top and/or bottom chord.
15) Attic room checked for L/360 deflection.

**LOAD CASE(S)** Standard

| Job | Truss | Truss Type | Qty | Ply | |
|---|---|---|---|---|---|
| 23090033 - Elev B | B2 | Attic | 2 | 1 | Job Reference (optional) |



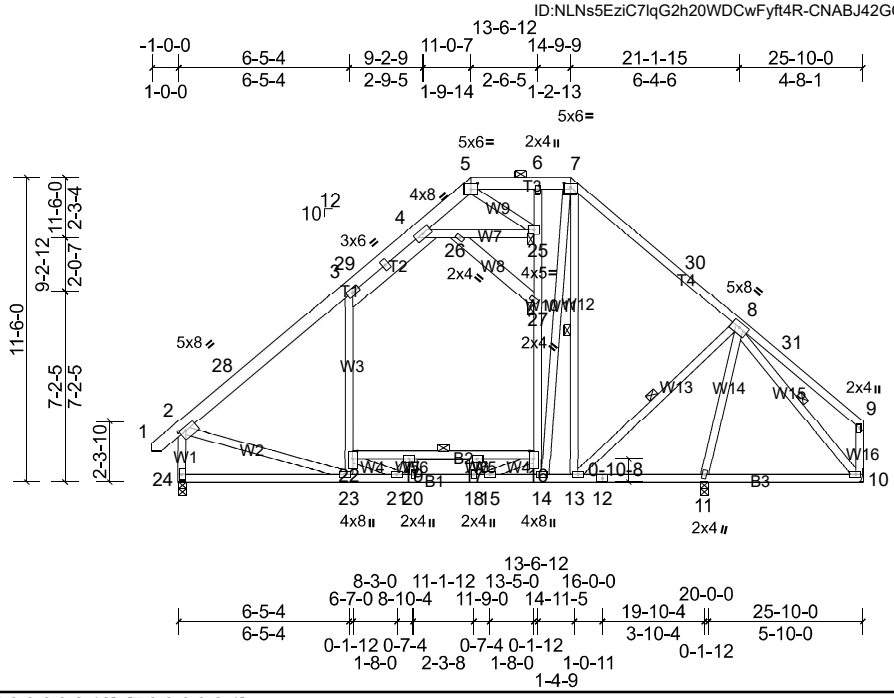


Scale = 1:87

Plate Offsets (X, Y): [2:0-3-0,0-1-12], [5:0-3-0,0-2-12], [7:0-3-0,0-2-1]

| Loading | (psf) | Spacing | 2-0-0 | CSI | | DEFL | in | (loc) | l/defl | L/d | PLATES | GRIP |
|---|---|---|---|---|---|---|---|---|---|---|---|---|
| TCLL (roof) | 20.0 | Plate Grip DOL | 1.15 | TC | 0.63 | Vert(LL) | -0.11 | 22 | >999 | 240 | MT20 | 244/190 |
| Snow (Pf/Pg) | 18.9/20.0 | Lumber DOL | 1.15 | BC | 0.54 | Vert(CT) | -0.23 | 23-24 | >999 | 180 | | |
| TCDL | 10.0 | Rep Stress Incr | YES | WB | 0.75 | Horz(CT) | 0.03 | 10 | n/a | n/a | | |
| BCLL | 0.0* | Code | IRC2018/TPI2014 | Matrix-MSH | | Attic | -0.06 | 16-22 | >999 | 360 | | |
| BCDL | 10.0 | | | | | | | | | | Weight: 259 lb | FT = 20% |

**LUMBER**

TOP CHORD 2x6 SP 2400F 2.0E *Except* T4:2x4 SP No.2
BOT CHORD 2x4 SP No.2 *Except* B2:2x4 SP No.3
WEBS 2x4 SP No.3 *Except* W10,W11,W12,W7:2x4 SP No.2, W8:2x6 SP No.2

**BRACING**

TOP CHORD Structural wood sheathing directly applied or 5-2-6 oc purlins, except end verticals, and 2-0-0 oc purlins (6-0-0 max.): 5-7.
BOT CHORD Rigid ceiling directly applied or 10-0-0 oc bracing. Except:
6-0-0 oc bracing: 16-22
WEBS 1 Row at midpt 7-13, 8-13, 8-10
JOINTS 1 Brace at Jt(s): 25, 27

MiTek recommends that Stabilizers and required cross bracing be installed during truss erection, in accordance with Stabilizer Installation guide.

**REACTIONS** (lb/size) 10=844/ Mechanical, (min. 0-1-8), 11=228/0-3-8, (min. 0-1-8), 24=1097/0-3-8, (min. 0-1-11)
Max Horiz 24=238 (LC 12)
Max Uplift 10=-52 (LC 13), 11=-156 (LC 9)
Max Grav 10=1189 (LC 26), 11=491 (LC 33), 24=1436 (LC 26)

**FORCES** (lb) - Max. Comp./Max. Ten. - All forces 250 (lb) or less except when shown.
TOP CHORD 2-28=-1373/0, 3-28=-1218/0, 3-29=-1087/67, 4-29=-1071/101, 4-5=-527/82, 5-6=-895/147, 6-7=-885/155, 7-30=-1054/147, 8-30=-1159/114, 2-24=-1354/1
BOT CHORD 23-24=-220/292, 21-23=-13/1167, 20-21=0/1602, 18-20=0/1602, 15-18=0/1602, 14-15=0/707, 13-14=0/855, 12-13=-122/864, 11-12=-122/864, 10-11=-102/836, 19-22=-629/0, 17-19=-745/0, 16-17=-394/23
WEBS 3-22=-42/252, 14-16=-485/19, 16-27=-277/108, 6-25=-484/141, 7-14=-16/823, 8-11=-382/256, 4-26=-656/75, 25-26=-470/78, 2-23=0/853, 8-10=-1306/122, 5-25=-79/733, 21-22=0/598, 15-16=0/670, 17-18=-31/290, 15-17=-679/0

**NOTES**

1) Unbalanced roof live loads have been considered for this design.
2) Wind: ASCE 7-16; Vult=130mph (3-second gust) Vasd=103mph; TCDL=6.0psf; BCDL=6.0psf; h=25ft; Cat. II; Exp B; Enclosed; MWFRS (envelope) and C-C Exterior(2E) -0-9-13 to 2-2-3, Interior (1) 2-2-3 to 11-0-7, Exterior(2E) 11-0-7 to 14-9-9, Exterior(2R) 14-9-9 to 19-0-7, Interior (1) 19-0-7 to 25-8-4 zone; cantilever left and right exposed ; end vertical left and right exposed;C-C for members and forces & MWFRS for reactions shown; Lumber DOL=1.60 plate grip DOL=1.33
3) TCLL: ASCE 7-16; Pr=20.0 psf (roof LL: Lum DOL=1.15 Plate DOL=1.15); Pg=20.0 psf; Pf=18.9 psf (Lum DOL=1.15 Plate DOL=1.15); Is=1.0; Rough Cat B; Fully Exp.; Ce=0.9; Cs=1.00; Ct=1.10, Lu=50-0-0; Min. flat roof snow load governs. Rain surcharge applied to all exposed surfaces with slopes less than 0.500/12 in accordance with IBC 1608.3.4.
4) This truss has been designed for greater of min roof live load of 12.0 psf or 2.00 times flat roof load of 13.9 psf on overhangs non-concurrent with other live loads.
5) Provide adequate drainage to prevent water ponding.
6) All plates are 3x5 MT20 unless otherwise indicated.
7) * This truss has been designed for a live load of 20.0psf on the bottom chord in all areas where a rectangle 3-06-00 tall by 2-00-00 wide will fit between the bottom chord and any other members.
8) Ceiling dead load (10.0 psf) on member(s). 3-4, 4-26, 25-26
9) Bottom chord live load (40.0 psf) and additional bottom chord dead load (5.0 psf) applied only to room. 19-22, 17-19, 16-17
10) Refer to girder(s) for truss to truss connections.
11) Provide mechanical connection (by others) of truss to bearing plate capable of withstanding 52 lb uplift at joint 10.
12) One H2.5A Simpson Strong-Tie connectors recommended to connect truss to bearing walls due to UPLIFT at jt(s) 11. This connection is for uplift only and does not consider lateral forces.
13) This truss is designed in accordance with the 2018 International Residential Code sections R502.11.1 and R802.10.2 and referenced standard ANSI/TPI 1.
14) Graphical purlin representation does not depict the size or the orientation of the purlin along the top and/or bottom chord.
15) Attic room checked for L/360 deflection.

**LOAD CASE(S)** Standard

| Job | Truss | Truss Type | Qty | Ply | |
|---|---|---|---|---|---|
| 23090033 - Elev B | B3 | Attic | 1 | 1 | Job Reference (optional) |



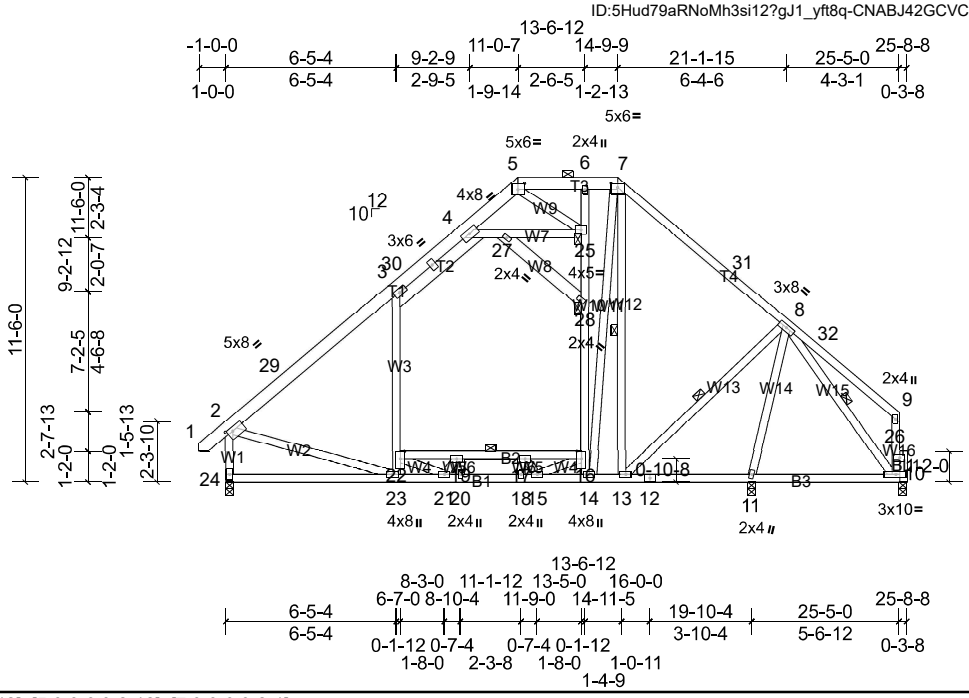





Scale = 1:87

Plate Offsets (X, Y): [2:0-3-0,0-1-12], [5:0-3-0,0-2-12], [7:0-3-0,0-2-1]

| Loading | (psf) | Spacing | 2-0-0 | CSI | | DEFL | in | (loc) | l/defl | L/d | PLATES | GRIP |
|---|---|---|---|---|---|---|---|---|---|---|---|---|
| TCLL (roof) | 20.0 | Plate Grip DOL | 1.15 | TC | 0.63 | Vert(LL) | -0.11 | 22 | >999 | 240 | MT20 | 244/190 |
| Snow (Pf/Pg) | 18.9/20.0 | Lumber DOL | 1.15 | BC | 0.54 | Vert(CT) | -0.23 | 23-24 | >999 | 180 | | |
| TCDL | 10.0 | Rep Stress Incr | YES | WB | 0.75 | Horz(CT) | 0.03 | 10 | n/a | n/a | | |
| BCLL | 0.0* | Code | IRC2018/TPI2014 | Matrix-MSH | | Attic | -0.06 | 16-22 | >999 | 360 | | |
| BCDL | 10.0 | | | | | | | | | | Weight: 260 lb | FT = 20% |

**LUMBER**

TOP CHORD 2x6 SP 2400F 2.0E *Except* T4:2x4 SP No.2
BOT CHORD 2x4 SP No.2 *Except* B2:2x4 SP No.3
WEBS 2x4 SP No.3 *Except* W10,W11,W12,W7:2x4 SP No.2, W8:2x6 SP No.2
OTHERS 2x4 SP No.3

**BRACING**

TOP CHORD Structural wood sheathing directly applied or 5-1-15 oc purlins, except end verticals, and 2-0-0 oc purlins (6-0-0 max.): 5-7.
BOT CHORD Rigid ceiling directly applied or 10-0-0 oc bracing. Except:
6-0-0 oc bracing: 16-22
WEBS 1 Row at midpt 7-13, 8-13, 8-10
JOINTS 1 Brace at Jt(s): 25, 28

MiTek recommends that Stabilizers and required cross bracing be installed during truss erection, in accordance with Stabilizer Installation guide.

**REACTIONS** (lb/size) 10=855/0-3-8, (min. 0-1-8), 11=193/0-3-8, (min. 0-1-8), 24=1096/0-3-8, (min. 0-1-11)
Max Horiz 24=242 (LC 10)
Max Uplift 10=-56 (LC 13), 11=-169 (LC 9)
Max Grav 10=1214 (LC 26), 11=460 (LC 33), 24=1434 (LC 26)

**FORCES** (lb) - Max. Comp./Max. Ten. - All forces 250 (lb) or less except when shown.
TOP CHORD 2-29=-1370/0, 3-29=-1215/0, 3-30=-1084/64, 4-30=-1068/98, 4-5=-525/80, 5-6=-893/144, 6-7=-882/152, 7-31=-1051/142, 8-31=-1155/110, 2-24=-1352/1
BOT CHORD 23-24=-223/292, 21-23=-28/1165, 20-21=0/1600, 18-20=0/1600, 15-18=0/1600, 14-15=0/704, 13-14=0/852, 12-13=-131/853, 11-12=-131/853, 10-11=-110/815, 19-22=-629/0, 17-19=-745/0, 16-17=-394/24
WEBS 3-22=-42/252, 14-16=-488/20, 16-28=-279/110, 6-25=-486/142, 7-14=-19/823, 8-11=-356/279, 4-27=-655/74, 25-27=-469/78, 2-23=0/852, 8-10=-1325/136, 5-25=-79/731, 21-22=0/598, 15-16=0/671, 17-18=-32/290, 15-17=-679/0

**NOTES**

1) Unbalanced roof live loads have been considered for this design.
2) Wind: ASCE 7-16; Vult=130mph (3-second gust) Vasd=103mph; TCDL=6.0psf; BCDL=6.0psf; h=25ft; Cat. II; Exp B; Enclosed; MWFRS (envelope) and C-C Exterior(2E) -0-9-13 to 2-2-3, Interior (1) 2-2-3 to 11-0-7, Exterior(2E) 11-0-7 to 14-9-9, Exterior(2R) 14-9-9 to 19-0-7, Interior (1) 19-0-7 to 25-3-4 zone; cantilever left and right exposed ; end vertical left and right exposed;C-C for members and forces & MWFRS for reactions shown; Lumber DOL=1.60 plate grip DOL=1.33
3) TCLL: ASCE 7-16; Pr=20.0 psf (roof LL: Lum DOL=1.15 Plate DOL=1.15); Pg=20.0 psf; Pf=18.9 psf (Lum DOL=1.15 Plate DOL=1.15); Is=1.0; Rough Cat B; Fully Exp.; Ce=0.9; Cs=1.00; Ct=1.10, Lu=50-0-0; Min. flat roof snow load governs. Rain surcharge applied to all exposed surfaces with slopes less than 0.500/12 in accordance with IBC 1608.3.4.
4) This truss has been designed for greater of min roof live load of 12.0 psf or 2.00 times flat roof load of 13.9 psf on overhangs non-concurrent with other live loads.
5) Provide adequate drainage to prevent water ponding.
6) All plates are 3x5 MT20 unless otherwise indicated.
7) * This truss has been designed for a live load of 20.0psf on the bottom chord in all areas where a rectangle 3-06-00 tall by 2-00-00 wide will fit between the bottom chord and any other members.
8) Ceiling dead load (10.0 psf) on member(s). 3-4, 4-27, 25-27
9) Bottom chord live load (40.0 psf) and additional bottom chord dead load (5.0 psf) applied only to room. 19-22, 17-19, 16-17
10) Bearing at joint(s) 10 considers parallel to grain value using ANSI/TPI 1 angle to grain formula. Building designer should verify capacity of bearing surface.
11) One H2.5A Simpson Strong-Tie connectors recommended to connect truss to bearing walls due to UPLIFT at jt(s) 11 and 10. This connection is for uplift only and does not consider lateral forces.
12) This truss is designed in accordance with the 2018 International Residential Code sections R502.11.1 and R802.10.2 and referenced standard ANSI/TPI 1.
13) Graphical purlin representation does not depict the size or the orientation of the purlin along the top and/or bottom chord.
14) Attic room checked for L/360 deflection.

**LOAD CASE(S)** Standard

| Job | Truss | Truss Type | Qty | Ply | |
|---|---|---|---|---|---|
| 23090033 - Elev B | C1 | Attic Supported Gable | 1 | 1 | Job Reference (optional) |



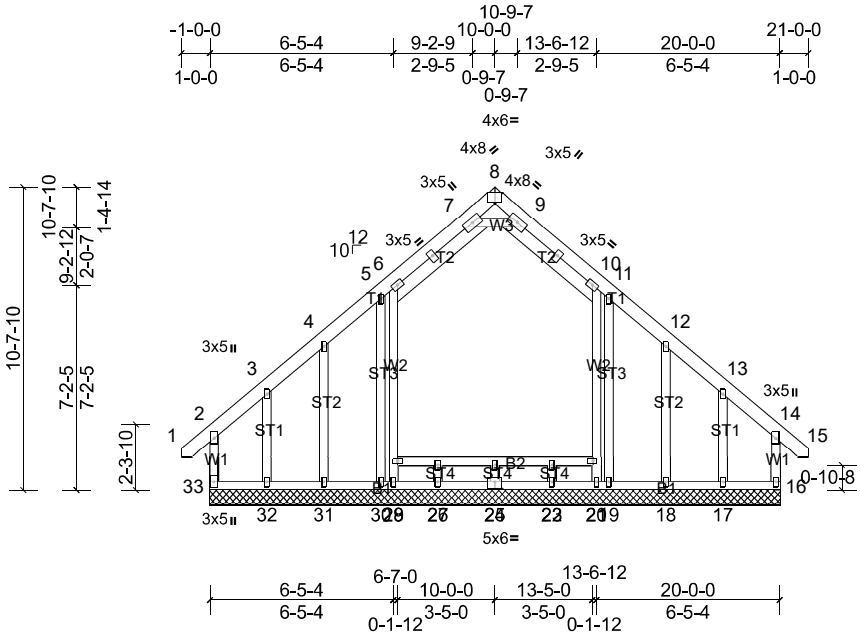


Scale = 1:80.9

Plate Offsets (X, Y): [8:0-3-0,Edge], [25:0-3-0,0-3-0]

| Loading | (psf) | Spacing | 1-11-4 | CSI | | DEFL | in | (loc) | l/defl | L/d | PLATES | GRIP |
|---|---|---|---|---|---|---|---|---|---|---|---|---|
| TCLL (roof) | 20.0 | Plate Grip DOL | 1.15 | TC | 0.35 | Vert(LL) | n/a | - | n/a | 999 | MT20 | 244/190 |
| Snow (Pf/Pg) | 13.9/20.0 | Lumber DOL | 1.15 | BC | 0.15 | Vert(CT) | n/a | - | n/a | 999 | | |
| TCDL | 10.0 | Rep Stress Incr | YES | WB | 0.11 | Horz(CT) | 0.00 | 16 | n/a | n/a | | |
| BCLL | 0.0* | Code | IRC2018/TPI2014 | Matrix-MSH | | | | | | | | |
| BCDL | 10.0 | | | | | | | | | | Weight: 201 lb | FT = 20% |

**LUMBER**

TOP CHORD 2x6 SP 2400F 2.0E
BOT CHORD 2x4 SP No.2 *Except* B2:2x4 SP No.3
WEBS 2x4 SP No.3 *Except* W3:2x4 SP No.2
OTHERS 2x4 SP No.3

**BRACING**

TOP CHORD Structural wood sheathing directly applied or 6-0-0 oc purlins, except end verticals.
BOT CHORD Rigid ceiling directly applied or 10-0-0 oc bracing.

**REACTIONS** All bearings 20-0-0.
(lb) - Max Horiz 33=216 (LC 12)
Max Uplift All uplift 100 (lb) or less at joint(s) 18, 19, 30, 31 except 16=-141 (LC 10), 17=-151 (LC 9), 32=-158 (LC 10), 33=-150 (LC 9)
Max Grav All reactions 250 (lb) or less at joint (s) 18, 19, 23, 25, 27, 30, 31 except 16=275 (LC 26), 17=271 (LC 27), 20=273 (LC 28), 29=273 (LC 29), 32=276 (LC 26), 33=282 (LC 27)

**FORCES** (lb) - Max. Comp./Max. Ten. - All forces 250 (lb) or less except when shown.
TOP CHORD 4-5=-116/276, 5-6=-137/315, 10-11=-137/315, 11-12=-116/276
WEBS 7-9=-149/609

**NOTES**

1) Unbalanced roof live loads have been considered for this design.
2) Wind: ASCE 7-16; Vult=130mph (3-second gust) Vasd=103mph; TCDL=6.0psf; BCDL=6.0psf; h=25ft; Cat. II; Exp B; Enclosed; MWFRS (envelope) and C-C Corner (3E) -0-9-13 to 2-0-0, Exterior(2N) 2-0-0 to 10-0-0, Corner(3R) 10-0-0 to 13-0-0, Exterior(2N) 13-0-0 to 20-9-13 zone; cantilever left and right exposed ; end vertical left and right exposed;C-C for members and forces & MWFRS for reactions shown; Lumber DOL=1.60 plate grip DOL=1.33
3) Truss designed for wind loads in the plane of the truss only. For studs exposed to wind (normal to the face), see Standard Industry Gable End Details as applicable, or consult qualified building designer as per ANSI/TPI 1.
4) TCLL: ASCE 7-16; Pr=20.0 psf (roof LL: Lum DOL=1.15 Plate DOL=1.15); Pg=20.0 psf; Pf=13.9 psf (Lum DOL=1.15 Plate DOL=1.15); Is=1.0; Rough Cat B; Fully Exp.; Ce=0.9; Cs=1.00; Ct=1.10
5) This truss has been designed for greater of min roof live load of 12.0 psf or 2.00 times flat roof load of 13.9 psf on overhangs non-concurrent with other live loads.
6) All plates are 2x4 MT20 unless otherwise indicated.
7) Gable requires continuous bottom chord bearing.
8) Truss to be fully sheathed from one face or securely braced against lateral movement (i.e. diagonal web).
9) Gable studs spaced at 2-0-0 oc.
10) * This truss has been designed for a live load of 20.0psf on the bottom chord in all areas where a rectangle 3-06-00 tall by 2-00-00 wide will fit between the bottom chord and any other members, with BCDL = 10.0psf.
11) Provide mechanical connection (by others) of truss to bearing plate capable of withstanding 100 lb uplift at joint (s) 30, 31, 19, 18 except (jt=lb) 33=149, 16=140, 32=157, 17=151.
12) This truss is designed in accordance with the 2018 International Residential Code sections R502.11.1 and R802.10.2 and referenced standard ANSI/TPI 1.
13) Attic room checked for L/360 deflection.

**LOAD CASE(S)** Standard

| Job | Truss | Truss Type | Qty | Ply | |
|---|---|---|---|---|---|
| 23090033 - Elev B | C2 | Attic | 1 | 1 | Job Reference (optional) |



I?:8tsunz3jJbmhEGIaUCM4Fxyft4J-gZkZXQ3uzpK2j1Ak8mCTYo5lglyEW7bKph2smwydqPp

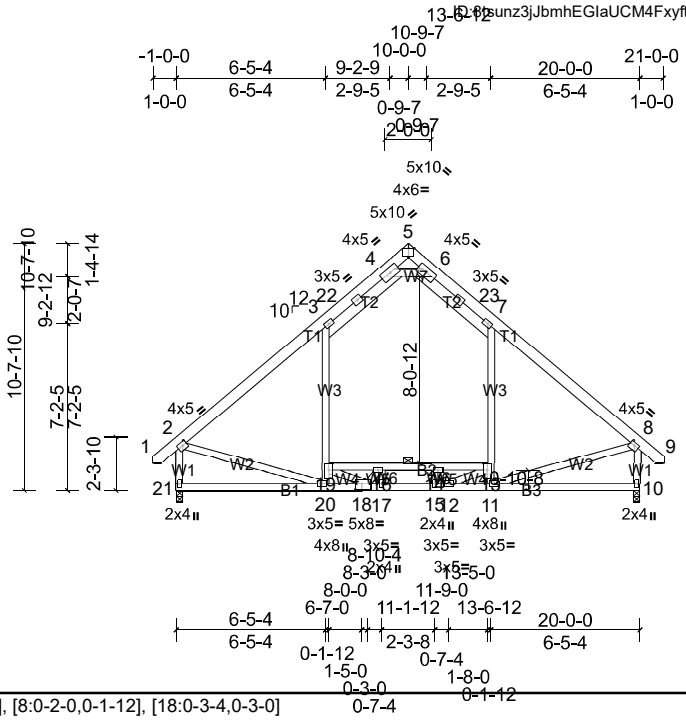


Scale = 1:99.4

Plate Offsets (X, Y): [2:0-2-0,0-1-12], [5:0-3-0,Edge], [8:0-2-0,0-1-12], [18:0-3-4,0-3-0]

| Loading | (psf) | Spacing | 1-11-4 | CSI | | DEFL | in | (loc) | l/defl | L/d | PLATES | GRIP |
|---|---|---|---|---|---|---|---|---|---|---|---|---|
| TCLL (roof) | 20.0 | Plate Grip DOL | 1.15 | TC | 0.49 | Vert(LL) | -0.07 | 13-14 | >999 | 240 | MT20 | 244/190 |
| Snow (Pf/Pg) | 13.9/20.0 | Lumber DOL | 1.15 | BC | 0.44 | Vert(CT) | -0.12 | 20-21 | >999 | 180 | | |
| TCDL | 10.0 | Rep Stress Incr | YES | WB | 0.31 | Horz(CT) | 0.01 | 10 | n/a | n/a | | |
| BCLL | 0.0* | Code | IRC2018/TPI2014 | Matrix-MSH | | Attic | -0.05 | 13-19 | >999 | 360 | | |
| BCDL | 10.0 | | | | | | | | | | Weight: 183 lb | FT = 20% |

**LUMBER**

TOP CHORD 2x6 SP 2400F 2.0E
BOT CHORD 2x4 SP No.2 *Except* B2:2x4 SP No.3
WEBS 2x4 SP No.3 *Except* W7:2x4 SP No.2

**BRACING**

TOP CHORD Structural wood sheathing directly applied or 6-0-0 oc purlins, except end verticals.
BOT CHORD Rigid ceiling directly applied or 10-0-0 oc bracing. Except:
6-0-0 oc bracing: 13-19

**REACTIONS** (lb/size) 10=864/0-3-8, (min. 0-1-8), 21=864/0-3-8, (min. 0-1-8)
Max Horiz 21=-216 (LC 11)
Max Grav 10=1110 (LC 27), 21=1110 (LC 26)

**FORCES** (lb) - Max. Comp./Max. Ten. - All forces 250 (lb) or less except when shown.
TOP CHORD 2-3=-1093/0, 3-22=-746/69, 4-22=-650/98, 4-5=-178/893, 5-6=-178/892, 6-23=-650/98, 7-23=-747/70, 7-8=-1093/0, 2-21=-1053/25, 8-10=-1053/25
BOT CHORD 20-21=-198/266, 18-20=0/827, 17-18=0/1423, 15-17=0/1423, 12-15=0/1423, 11-12=0/740, 16-19=-453/0, 14-16=-760/0, 13-14=-531/0
WEBS 7-13=0/345, 3-19=0/345, 4-6=-1848/344, 2-20=0/758, 8-11=0/759, 18-19=0/528, 12-13=0/598, 16-18=-442/0, 12-14=-416/5

**NOTES**

1) Unbalanced roof live loads have been considered for this design.
2) Wind: ASCE 7-16; Vult=130mph (3-second gust) Vasd=103mph; TCDL=6.0psf; BCDL=6.0psf; h=25ft; Cat. II; Exp B; Enclosed; MWFRS (envelope) and C-C Exterior(2E) -0-9-13 to 2-2-3, Interior (1) 2-2-3 to 10-0-0, Exterior(2R) 10-0-0 to 13-0-0, Interior (1) 13-0-0 to 20-9-13 zone; cantilever left and right exposed ; end vertical left and right exposed;C-C for members and forces & MWFRS for reactions shown; Lumber DOL=1.60 plate grip DOL=1.33
3) TCLL: ASCE 7-16; Pr=20.0 psf (roof LL: Lum DOL=1.15 Plate DOL=1.15); Pg=20.0 psf; Pf=13.9 psf (Lum DOL=1.15 Plate DOL=1.15); Is=1.0; Rough Cat B; Fully Exp.; Ce=0.9; Cs=1.00; Ct=1.10
4) This truss has been designed for greater of min roof live load of 12.0 psf or 2.00 times flat roof load of 13.9 psf on overhangs non-concurrent with other live loads.
5) * This truss has been designed for a live load of 20.0psf on the bottom chord in all areas where a rectangle 3-06-00 tall by 2-00-00 wide will fit between the bottom chord and any other members.
6) Ceiling dead load (10.0 psf) on member(s). 3-4, 6-7, 4-6
7) Bottom chord live load (40.0 psf) and additional bottom chord dead load (5.0 psf) applied only to room. 16-19, 14-16, 13-14
8) This truss is designed in accordance with the 2018 International Residential Code sections R502.11.1 and R802.10.2 and referenced standard ANSI/TPI 1.
9) Attic room checked for L/360 deflection.

**LOAD CASE(S)** Standard

| Job | Truss | Truss Type | Qty | Ply | |
|---|---|---|---|---|---|
| 23090033 - Elev B | CJ1 | Jack-Open | 6 | 1 | Job Reference (optional) |



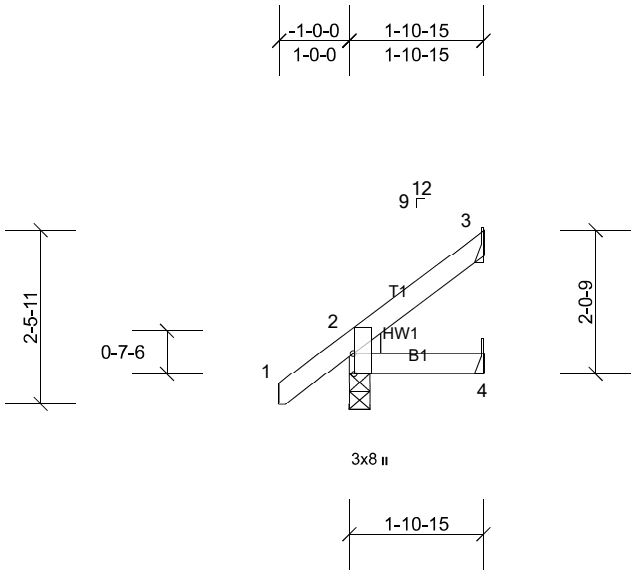


Scale = 1:32.8

Plate Offsets (X, Y): [2:0-3-8,Edge]

| Loading | (psf) | Spacing | 2-0-0 | CSI | | DEFL | in | (loc) | l/defl | L/d | PLATES | GRIP |
|---|---|---|---|---|---|---|---|---|---|---|---|---|
| TCLL (roof) | 20.0 | Plate Grip DOL | 1.15 | TC | 0.08 | Vert(LL) | 0.00 | 4-7 | >999 | 240 | MT20 | 244/190 |
| Snow (Pf/Pg) | 13.9/20.0 | Lumber DOL | 1.15 | BC | 0.04 | Vert(CT) | 0.00 | 4-7 | >999 | 180 | | |
| TCDL | 10.0 | Rep Stress Incr | YES | WB | 0.00 | Horz(CT) | 0.00 | 2 | n/a | n/a | | |
| BCLL | 0.0* | Code | IRC2018/TPI2014 | Matrix-MP | | | | | | | | |
| BCDL | 10.0 | | | | | | | | | | Weight: 9 lb | FT = 20% |

**LUMBER**
TOP CHORD 2x4 SP No.2
BOT CHORD 2x4 SP No.2
WEDGE Left: 2x4 SP No.3

**BRACING**
TOP CHORD Structural wood sheathing directly applied or 1-10-15 oc purlins.
BOT CHORD Rigid ceiling directly applied or 10-0-0 oc bracing.

MiTek recommends that Stabilizers and required cross bracing be installed during truss erection, in accordance with Stabilizer Installation guide.

**REACTIONS** (lb/size) 2=121/0-3-8, (min. 0-1-8), 3=34/Mechanical, (min. 0-1-8), 4=19/Mechanical, (min. 0-1-8)
Max Horiz 2=51 (LC 13)
Max Uplift 3=-20 (LC 13)
Max Grav 2=147 (LC 2), 3=45 (LC 25), 4=23 (LC 25)

**FORCES** (lb) - Max. Comp./Max. Ten. - All forces 250 (lb) or less except when shown.

**NOTES**
1) Wind: ASCE 7-16; Vult=130mph (3-second gust) Vasd=103mph; TCDL=6.0psf; BCDL=6.0psf; h=25ft; Cat. II; Exp B; Enclosed; MWFRS (envelope) and C-C Exterior(2E) zone; cantilever left and right exposed ; end vertical left and right exposed;C-C for members and forces & MWFRS for reactions shown; Lumber DOL=1.60 plate grip DOL=1.33
2) TCLL: ASCE 7-16; Pr=20.0 psf (roof LL: Lum DOL=1.15 Plate DOL=1.15); Pg=20.0 psf; Pf=13.9 psf (Lum DOL=1.15 Plate DOL=1.15); Is=1.0; Rough Cat B; Fully Exp.; Ce=0.9; Cs=1.00; Ct=1.10
3) This truss has been designed for greater of min roof live load of 12.0 psf or 2.00 times flat roof load of 13.9 psf on overhangs non-concurrent with other live loads.
4) * This truss has been designed for a live load of 20.0psf on the bottom chord in all areas where a rectangle 3-06-00 tall by 2-00-00 wide will fit between the bottom chord and any other members.
5) Refer to girder(s) for truss to truss connections.
6) Provide mechanical connection (by others) of truss to bearing plate capable of withstanding 20 lb uplift at joint 3.
7) This truss is designed in accordance with the 2018 International Residential Code sections R502.11.1 and R802.10.2 and referenced standard ANSI/TPI 1.

**LOAD CASE(S)** Standard

| Job | Truss | Truss Type | Qty | Ply | |
|---|---|---|---|---|---|
| 23090033 - Elev B | CJ2 | Jack-Open | 6 | 1 | Job Reference (optional) |



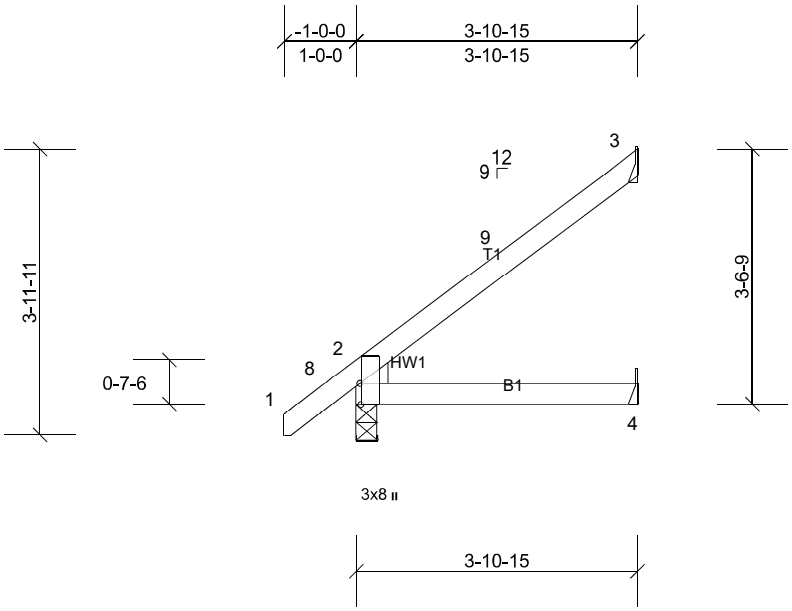


Scale = 1:32.1

Plate Offsets (X, Y): [2:0-3-8,Edge]

| Loading | (psf) | Spacing | 2-0-0 | CSI | | DEFL | in | (loc) | l/defl | L/d | PLATES | GRIP |
|---|---|---|---|---|---|---|---|---|---|---|---|---|
| TCLL (roof) | 20.0 | Plate Grip DOL | 1.15 | TC | 0.20 | Vert(LL) | 0.02 | 4-7 | >999 | 240 | MT20 | 244/190 |
| Snow (Pf/Pg) | 13.9/20.0 | Lumber DOL | 1.15 | BC | 0.21 | Vert(CT) | -0.02 | 4-7 | >999 | 180 | | |
| TCDL | 10.0 | Rep Stress Incr | YES | WB | 0.00 | Horz(CT) | -0.01 | 3 | n/a | n/a | | |
| BCLL | 0.0* | Code | IRC2018/TPI2014 | Matrix-MP | | | | | | | | |
| BCDL | 10.0 | | | | | | | | | | Weight: 16 lb | FT = 20% |

**LUMBER**
TOP CHORD 2x4 SP No.2
BOT CHORD 2x4 SP No.2
WEDGE Left: 2x4 SP No.3

**BRACING**
TOP CHORD Structural wood sheathing directly applied or 3-10-15 oc purlins.
BOT CHORD Rigid ceiling directly applied or 10-0-0 oc bracing.

MiTek recommends that Stabilizers and required cross bracing be installed during truss erection, in accordance with Stabilizer Installation guide.

**REACTIONS** (lb/size) 2=181/0-3-8, (min. 0-1-8), 3=78/Mechanical, (min. 0-1-8), 4=46/Mechanical, (min. 0-1-8)
Max Horiz 2=88 (LC 13)
Max Uplift 3=-43 (LC 13)
Max Grav 2=218 (LC 2), 3=104 (LC 25), 4=52 (LC 25)

**FORCES** (lb) - Max. Comp./Max. Ten. - All forces 250 (lb) or less except when shown.

**NOTES**
1) Wind: ASCE 7-16; Vult=130mph (3-second gust) Vasd=103mph; TCDL=6.0psf; BCDL=6.0psf; h=25ft; Cat. II; Exp B; Enclosed; MWFRS (envelope) and C-C Exterior(2E) -0-11-7 to 2-0-9, Interior (1) 2-0-9 to 3-10-3 zone; cantilever left and right exposed ; end vertical left and right exposed;C-C for members and forces & MWFRS for reactions shown; Lumber DOL=1.60 plate grip DOL=1.33
2) TCLL: ASCE 7-16; Pr=20.0 psf (roof LL: Lum DOL=1.15 Plate DOL=1.15); Pg=20.0 psf; Pf=13.9 psf (Lum DOL=1.15 Plate DOL=1.15); Is=1.0; Rough Cat B; Fully Exp.; Ce=0.9; Cs=1.00; Ct=1.10
3) This truss has been designed for greater of min roof live load of 12.0 psf or 2.00 times flat roof load of 13.9 psf on overhangs non-concurrent with other live loads.
4) * This truss has been designed for a live load of 20.0psf on the bottom chord in all areas where a rectangle 3-06-00 tall by 2-00-00 wide will fit between the bottom chord and any other members.
5) Refer to girder(s) for truss to truss connections.
6) Provide mechanical connection (by others) of truss to bearing plate capable of withstanding 43 lb uplift at joint 3.
7) This truss is designed in accordance with the 2018 International Residential Code sections R502.11.1 and R802.10.2 and referenced standard ANSI/TPI 1.

**LOAD CASE(S)** Standard

| Job | Truss | Truss Type | Qty | Ply | |
|---|---|---|---|---|---|
| 23090033 - Elev B | CJ3 | Jack-Open | 2 | 1 | Job Reference (optional) |



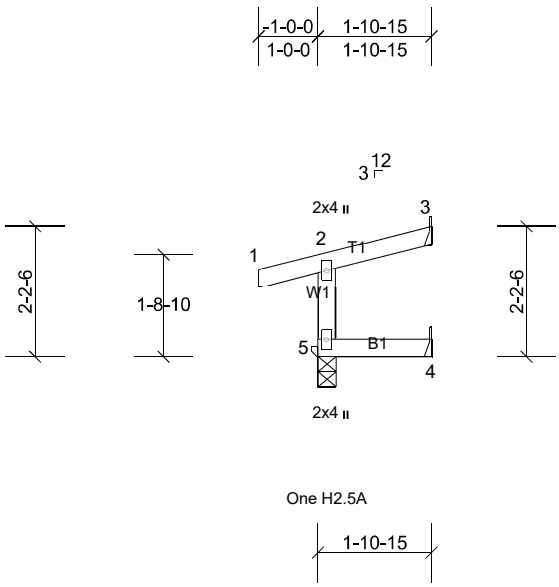


Scale = 1:38.8

| Loading | (psf) | Spacing | 2-0-0 | CSI | | DEFL | in | (loc) | l/defl | L/d | PLATES | GRIP |
|---|---|---|---|---|---|---|---|---|---|---|---|---|
| TCLL (roof) | 20.0 | Plate Grip DOL | 1.15 | TC | 0.19 | Vert(LL) | 0.00 | 4-5 | >999 | 240 | MT20 | 244/190 |
| Snow (Pf/Pg) | 13.9/20.0 | Lumber DOL | 1.15 | BC | 0.10 | Vert(CT) | 0.00 | 4-5 | >999 | 180 | | |
| TCDL | 10.0 | Rep Stress Incr | YES | WB | 0.00 | Horz(CT) | -0.01 | 3 | n/a | n/a | | |
| BCLL | 0.0* | Code | IRC2018/TPI2014 | Matrix-MR | | | | | | | | |
| BCDL | 10.0 | | | | | | | | | | Weight: 9 lb | FT = 20% |

**LUMBER**
TOP CHORD 2x4 SP No.2
BOT CHORD 2x4 SP No.2
WEBS 2x4 SP No.3

**BRACING**
TOP CHORD Structural wood sheathing directly applied or 1-10-15 oc purlins, except end verticals.
BOT CHORD Rigid ceiling directly applied or 10-0-0 oc bracing.

MiTek recommends that Stabilizers and required cross bracing be installed during truss erection, in accordance with Stabilizer Installation guide.

**REACTIONS** (lb/size) 3=27/ Mechanical, (min. 0-1-8), 4=15/ Mechanical, (min. 0-1-8), 5=131/0-3-8, (min. 0-1-8)
Max Horiz 5=35 (LC 12)
Max Uplift 3=-15 (LC 15), 4=-1 (LC 12), 5=-28 (LC 11)
Max Grav 3=36 (LC 22), 4=20 (LC 13), 5=167 (LC 22)

**FORCES** (lb) - Max. Comp./Max. Ten. - All forces 250 (lb) or less except when shown.

**NOTES**
1) Wind: ASCE 7-16; Vult=130mph (3-second gust) Vasd=103mph; TCDL=6.0psf; BCDL=6.0psf; h=25ft; Cat. II; Exp B; Enclosed; MWFRS (envelope) and C-C Exterior(2E) zone; cantilever left and right exposed ; end vertical left and right exposed;C-C for members and forces & MWFRS for reactions shown; Lumber DOL=1.60 plate grip DOL=1.33
2) TCLL: ASCE 7-16; Pr=20.0 psf (roof LL: Lum DOL=1.15 Plate DOL=1.15); Pg=20.0 psf; Pf=13.9 psf (Lum DOL=1.15 Plate DOL=1.15); Is=1.0; Rough Cat B; Fully Exp.; Ce=0.9; Cs=1.00; Ct=1.10; Min. flat roof snow load governs.
3) Unbalanced snow loads have been considered for this design.
4) This truss has been designed for greater of min roof live load of 12.0 psf or 2.00 times flat roof load of 13.9 psf on overhangs non-concurrent with other live loads.
5) * This truss has been designed for a live load of 20.0psf on the bottom chord in all areas where a rectangle 3-06-00 tall by 2-00-00 wide will fit between the bottom chord and any other members.
6) Refer to girder(s) for truss to truss connections.
7) Provide mechanical connection (by others) of truss to bearing plate capable of withstanding 1 lb uplift at joint 4 and 15 lb uplift at joint 3.
8) One H2.5A Simpson Strong-Tie connectors recommended to connect truss to bearing walls due to UPLIFT at jt(s) 5. This connection is for uplift only and does not consider lateral forces.
9) This truss is designed in accordance with the 2018 International Residential Code sections R502.11.1 and R802.10.2 and referenced standard ANSI/TPI 1.

**LOAD CASE(S)** Standard

| Job | Truss | Truss Type | Qty | Ply | |
|---|---|---|---|---|---|
| 23090033 - Elev B | D1 | Common Supported Gable | 1 | 1 | Job Reference (optional) |



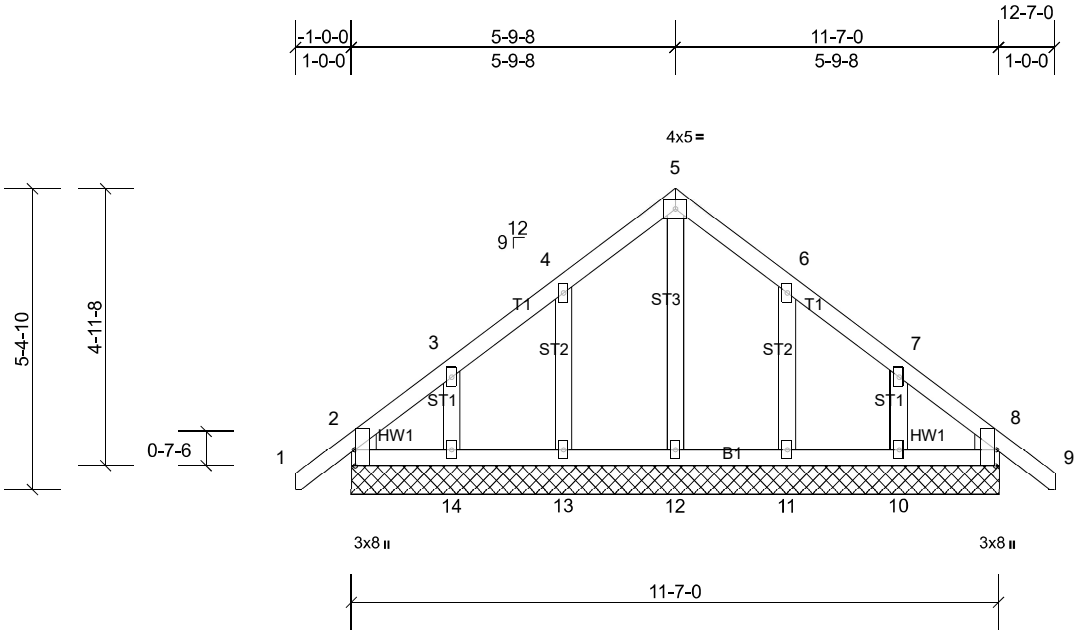


Scale = 1:41.2

Plate Offsets (X, Y): [2:0-3-8,Edge], [8:0-3-8,Edge]

| Loading | (psf) | Spacing | 1-11-4 | CSI | | DEFL | in | (loc) | l/defl | L/d | PLATES | GRIP |
|---|---|---|---|---|---|---|---|---|---|---|---|---|
| TCLL (roof) | 20.0 | Plate Grip DOL | 1.15 | TC | 0.08 | Vert(LL) | n/a | - | n/a | 999 | MT20 | 244/190 |
| Snow (Pf/Pg) | 13.9/20.0 | Lumber DOL | 1.15 | BC | 0.04 | Vert(CT) | n/a | - | n/a | 999 | | |
| TCDL | 10.0 | Rep Stress Incr | YES | WB | 0.04 | Horz(CT) | 0.00 | 8 | n/a | n/a | | |
| BCLL | 0.0* | Code | IRC2018/TPI2014 | Matrix-MSH | | | | | | | | |
| BCDL | 10.0 | | | | | | | | | | Weight: 63 lb | FT = 20% |

**LUMBER**

| | |
|---|---|
| TOP CHORD | 2x4 SP No.2 |
| BOT CHORD | 2x4 SP No.2 |
| OTHERS | 2x4 SP No.3 |
| WEDGE | Left: 2x4 SP No.3 |
| | Right: 2x4 SP No.3 |

**BRACING**

| | |
|---|---|
| TOP CHORD | Structural wood sheathing directly applied or 6-0-0 oc purlins. |
| BOT CHORD | Rigid ceiling directly applied or 10-0-0 oc bracing. |

**REACTIONS** All bearings 11-7-0.
(lb) - Max Horiz 2=-92 (LC 11), 15=-92 (LC 11)
Max Uplift All uplift 100 (lb) or less at joint(s) 2, 10, 11, 13, 14, 15
Max Grav All reactions 250 (lb) or less at joint (s) 2, 8, 10, 11, 12, 13, 14, 15, 19

**FORCES** (lb) - Max. Comp./Max. Ten. - All forces 250 (lb) or less except when shown.

**NOTES**

1) Unbalanced roof live loads have been considered for this design.
2) Wind: ASCE 7-16; Vult=130mph (3-second gust) Vasd=103mph; TCDL=6.0psf; BCDL=6.0psf; h=25ft; Cat. II; Exp B; Enclosed; MWFRS (envelope) and C-C Corner (3E) -0-11-7 to 1-9-8, Exterior(2N) 1-9-8 to 5-9-8, Corner (3R) 5-9-8 to 8-9-8, Exterior(2N) 8-9-8 to 12-6-7 zone; cantilever left and right exposed ; end vertical left and right exposed;C-C for members and forces & MWFRS for reactions shown; Lumber DOL=1.60 plate grip DOL=1.33
3) Truss designed for wind loads in the plane of the truss only. For studs exposed to wind (normal to the face), see Standard Industry Gable End Details as applicable, or consult qualified building designer as per ANSI/TPI 1.
4) TCLL: ASCE 7-16; Pr=20.0 psf (roof LL: Lum DOL=1.15 Plate DOL=1.15); Pg=20.0 psf; Pf=13.9 psf (Lum DOL=1.15 Plate DOL=1.15); Is=1.0; Rough Cat B; Fully Exp.; Ce=0.9; Cs=1.00; Ct=1.10
5) This truss has been designed for greater of min roof live load of 12.0 psf or 2.00 times flat roof load of 13.9 psf on overhangs non-concurrent with other live loads.
6) All plates are 2x4 MT20 unless otherwise indicated.
7) Gable requires continuous bottom chord bearing.
8) Gable studs spaced at 2-0-0 oc.
9) * This truss has been designed for a live load of 20.0psf on the bottom chord in all areas where a rectangle 3-06-00 tall by 2-00-00 wide will fit between the bottom chord and any other members.
10) Provide mechanical connection (by others) of truss to bearing plate capable of withstanding 100 lb uplift at joint (s) 2, 13, 14, 11, 10, 2.
11) Beveled plate or shim required to provide full bearing surface with truss chord at joint(s) 2, 15.
12) This truss is designed in accordance with the 2018 International Residential Code sections R502.11.1 and R802.10.2 and referenced standard ANSI/TPI 1.

**LOAD CASE(S)** Standard

| Job | Truss | Truss Type | Qty | Ply | |
|---|---|---|---|---|---|
| 23090033 - Elev B | D2 | Common | 1 | 1 | Job Reference (optional) |



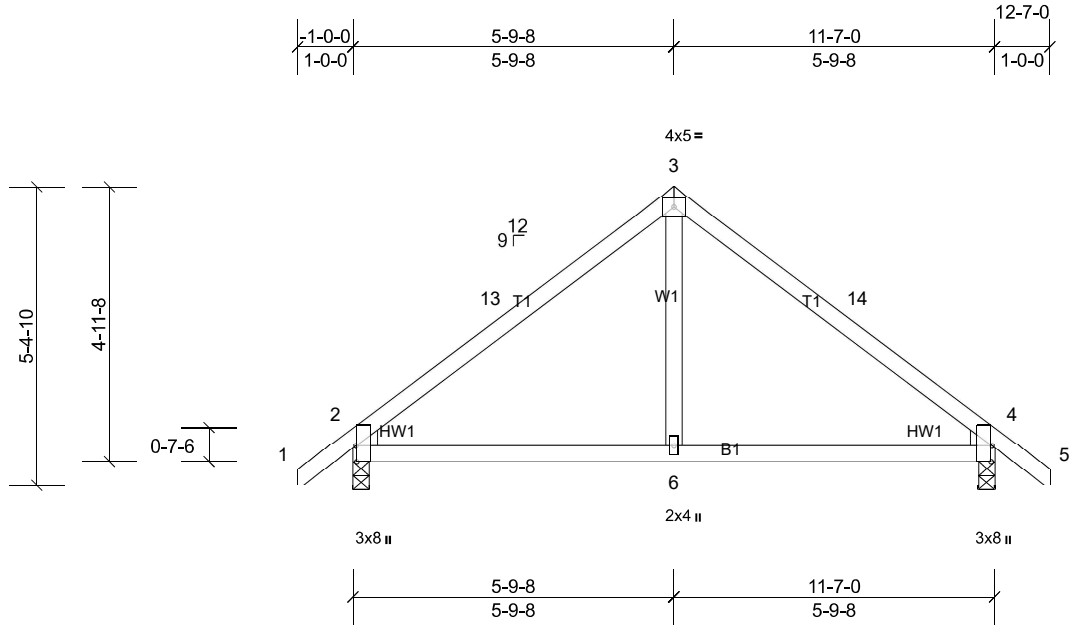


Scale = 1:41.6

Plate Offsets (X, Y): [2:0-3-8,Edge], [4:0-3-8,Edge]

| Loading | (psf) | Spacing | 1-11-4 | CSI | | DEFL | in | (loc) | l/defl | L/d | PLATES | GRIP |
|---|---|---|---|---|---|---|---|---|---|---|---|---|
| TCLL (roof) | 20.0 | Plate Grip DOL | 1.15 | TC | 0.37 | Vert(LL) | -0.03 | 6-9 | >999 | 240 | MT20 | 244/190 |
| Snow (Pf/Pg) | 13.9/20.0 | Lumber DOL | 1.15 | BC | 0.30 | Vert(CT) | -0.06 | 6-9 | >999 | 180 | | |
| TCDL | 10.0 | Rep Stress Incr | YES | WB | 0.07 | Horz(CT) | 0.01 | 2 | n/a | n/a | | |
| BCLL | 0.0* | Code | IRC2018/TPI2014 | Matrix-MSH | | | | | | | | |
| BCDL | 10.0 | | | | | | | | | | Weight: 51 lb | FT = 20% |

**LUMBER**

| | |
|---|---|
| TOP CHORD | 2x4 SP No.2 |
| BOT CHORD | 2x4 SP No.2 |
| WEBS | 2x4 SP No.3 |
| WEDGE | Left: 2x4 SP No.3<br>Right: 2x4 SP No.3 |

**BRACING**

| | |
|---|---|
| TOP CHORD | Structural wood sheathing directly applied or 6-0-0 oc purlins. |
| BOT CHORD | Rigid ceiling directly applied or 10-0-0 oc bracing. |

**REACTIONS** (lb/size) 2=424/0-3-8, (min. 0-1-8), 4=424/0-3-8, (min. 0-1-8)
Max Horiz 2=92 (LC 12)
Max Grav 2=504 (LC 2), 4=504 (LC 2)

**FORCES** (lb) - Max. Comp./Max. Ten. - All forces 250 (lb) or less except when shown.
TOP CHORD 2-13=-491/111, 3-13=-398/132, 3-14=-398/132, 4-14=-491/111
BOT CHORD 2-6=-43/320, 4-6=0/320

**NOTES**

1) Unbalanced roof live loads have been considered for this design.
2) Wind: ASCE 7-16; Vult=130mph (3-second gust) Vasd=103mph; TCDL=6.0psf; BCDL=6.0psf; h=25ft; Cat. II; Exp B; Enclosed; MWFRS (envelope) and C-C Exterior(2E) -0-11-7 to 2-0-9, Interior (1) 2-0-9 to 5-9-8, Exterior(2R) 5-9-8 to 8-9-8, Interior (1) 8-9-8 to 12-6-7 zone; cantilever left and right exposed ; end vertical left and right exposed;C-C for members and forces & MWFRS for reactions shown; Lumber DOL=1.60 plate grip DOL=1.33
3) TCLL: ASCE 7-16; Pr=20.0 psf (roof LL: Lum DOL=1.15 Plate DOL=1.15); Pg=20.0 psf; Pf=13.9 psf (Lum DOL=1.15 Plate DOL=1.15); Is=1.0; Rough Cat B; Fully Exp.; Ce=0.9; Cs=1.00; Ct=1.10
4) This truss has been designed for greater of min roof live load of 12.0 psf or 2.00 times flat roof load of 13.9 psf on overhangs non-concurrent with other live loads.
5) * This truss has been designed for a live load of 20.0psf on the bottom chord in all areas where a rectangle 3-06-00 tall by 2-00-00 wide will fit between the bottom chord and any other members.
6) This truss is designed in accordance with the 2018 International Residential Code sections R502.11.1 and R802.10.2 and referenced standard ANSI/TPI 1.

**LOAD CASE(S)** Standard

| Job | Truss | Truss Type | Qty | Ply | |
|---|---|---|---|---|---|
| 23090033 - Elev B | D3 | Common Girder | 1 | 2 | Job Reference (optional) |



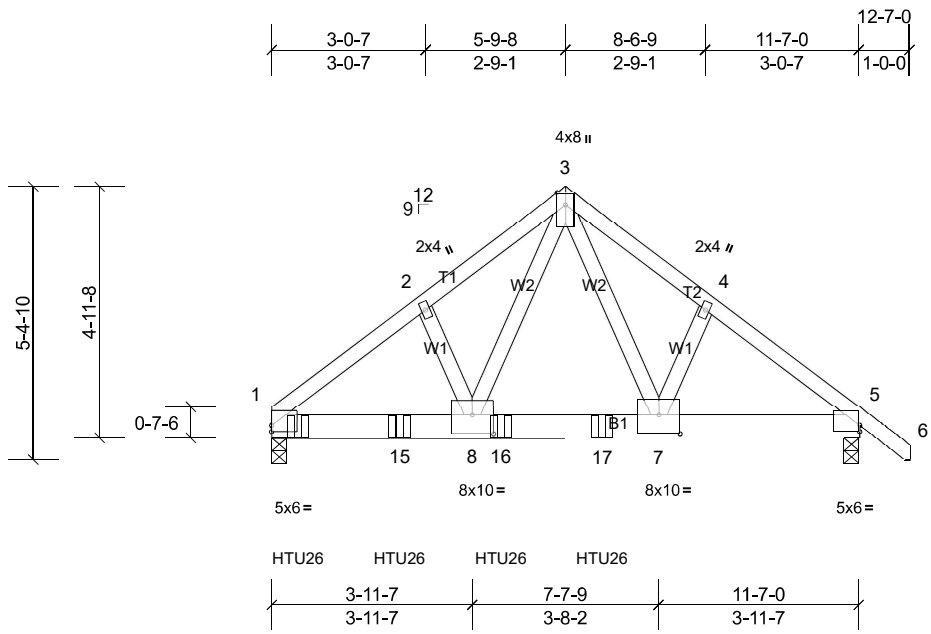


Scale = 1:45.5

Plate Offsets (X, Y): [1:Edge,0-1-8], [5:Edge,0-1-8], [7:0-5-0,0-4-8], [8:0-5-0,0-4-8]

| Loading | (psf) | Spacing | 1-11-4 | CSI | | DEFL | in | (loc) | l/defl | L/d | PLATES | GRIP |
|---|---|---|---|---|---|---|---|---|---|---|---|---|
| TCLL (roof) | 20.0 | Plate Grip DOL | 1.15 | TC | 0.36 | Vert(LL) | -0.05 | 7-8 | >999 | 240 | MT20 | 244/190 |
| Snow (Pf/Pg) | 13.9/20.0 | Lumber DOL | 1.15 | BC | 0.43 | Vert(CT) | -0.09 | 7-8 | >999 | 180 | | |
| TCDL | 10.0 | Rep Stress Incr | NO | WB | 0.72 | Horz(CT) | 0.01 | 5 | n/a | n/a | | |
| BCLL | 0.0* | Code | IRC2018/TPI2014 | Matrix-MSH | | | | | | | | |
| BCDL | 10.0 | | | | | | | | | | Weight: 143 lb | FT = 20% |

**LUMBER**
TOP CHORD 2x4 SP No.2
BOT CHORD 2x6 SP 2400F 2.0E
WEBS 2x4 SP No.3

**BRACING**
TOP CHORD Structural wood sheathing directly applied or 5-9-2 oc purlins.
BOT CHORD Rigid ceiling directly applied or 10-0-0 oc bracing.

**REACTIONS** (lb/size) 1=4667/0-3-8, (min. 0-2-0), 5=2572/0-3-8, (min. 0-1-8)
Max Horiz 1=-88 (LC 7)
Max Grav 1=4847 (LC 17), 5=2648 (LC 22)

**FORCES** (lb) - Max. Comp./Max. Ten. - All forces 250 (lb) or less except when shown.
TOP CHORD 1-2=-4767/0, 2-3=-4708/0, 3-4=-3956/0, 4-5=-4044/0
BOT CHORD 1-15=0/3822, 8-15=0/3822, 8-16=0/2487, 16-17=0/2487, 7-17=0/2487, 5-7=0/3160
WEBS 3-7=-218/1929, 3-8=0/3517

**NOTES**
1) 2-ply truss to be connected together with 10d (0.131"x3") nails as follows:
Top chords connected as follows: 2x4 - 1 row at 0-9-0 oc.
Bottom chords connected as follows: 2x6 - 2 rows staggered at 0-4-0 oc.
Web connected as follows: 2x4 - 1 row at 0-9-0 oc.
2) All loads are considered equally applied to all plies, except if noted as front (F) or back (B) face in the LOAD CASE(S) section. Ply to ply connections have been provided to distribute only loads noted as (F) or (B), unless otherwise indicated.
3) Unbalanced roof live loads have been considered for this design.
4) Wind: ASCE 7-16; Vult=130mph (3-second gust) Vasd=103mph; TCDL=6.0psf; BCDL=6.0psf; h=25ft; Cat. II; Exp B; Enclosed; MWFRS (envelope); cantilever left and right exposed ; end vertical left and right exposed; Lumber DOL=1.60 plate grip DOL=1.33
5) TCLL: ASCE 7-16; Pr=20.0 psf (roof LL: Lum DOL=1.15 Plate DOL=1.15); Pg=20.0 psf; Pf=13.9 psf (Lum DOL=1.15 Plate DOL=1.15); Is=1.0; Rough Cat B; Fully Exp.; Ce=0.9; Cs=1.00; Ct=1.10
6) This truss has been designed for greater of min roof live load of 12.0 psf or 2.00 times flat roof load of 13.9 psf on overhangs non-concurrent with other live loads.
7) * This truss has been designed for a live load of 20.0psf on the bottom chord in all areas where a rectangle 3-06-00 tall by 2-00-00 wide will fit between the bottom chord and any other members.
8) This truss is designed in accordance with the 2018 International Residential Code sections R502.11.1 and R802.10.2 and referenced standard ANSI/TPI 1.
9) Use Simpson Strong-Tie HTU26 (20-10d Girder, 11-10dx1 1/2 Truss, Single Ply Girder) or equivalent spaced at 2-0-0 oc max. starting at 0-6-4 from the left end to 4-6-4 to connect truss(es) A4 (1 ply 2x4 SP), A3 (1 ply 2x4 SP), A2 (1 ply 2x4 SP) to back face of bottom chord.
10) Use Simpson Strong-Tie HTU26 (20-16d Girder, 11-10dx1 1/2 Truss) or equivalent at 6-6-4 from the left end to connect truss(es) A7 (1 ply 2x6 SP) to back face of bottom chord.
11) Fill all nail holes where hanger is in contact with lumber.

**LOAD CASE(S)** Standard
1) Dead + Snow (balanced): Lumber Increase=1.15, Plate Increase=1.15
Uniform Loads (lb/ft)
Vert: 1-3=-46, 3-6=-46, 9-12=-19
Concentrated Loads (lb)
Vert: 11=-1427, 15=-1355, 16=-1388, 17=-2265

| Job | Truss | Truss Type | Qty | Ply | |
|---|---|---|---|---|---|
| 23090033 - Elev B | E1 | Common Supported Gable | 1 | 1 | Job Reference (optional) |



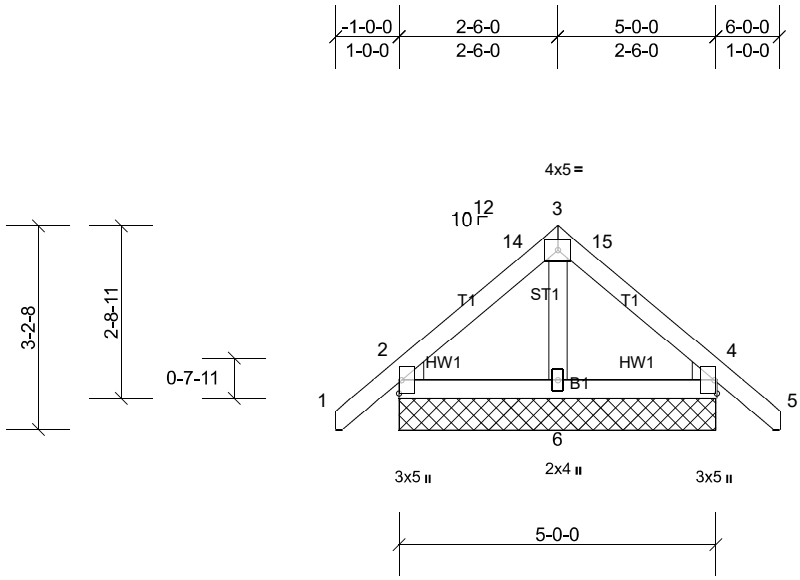


Scale = 1:36.4

| Loading | (psf) | Spacing | 1-11-4 | CSI | | DEFL | in | (loc) | l/defl | L/d | PLATES | GRIP |
|---|---|---|---|---|---|---|---|---|---|---|---|---|
| TCLL (roof) | 20.0 | Plate Grip DOL | 1.15 | TC | 0.10 | Vert(LL) | n/a | - | n/a | 999 | MT20 | 244/190 |
| Snow (Pf/Pg) | 13.9/20.0 | Lumber DOL | 1.15 | BC | 0.08 | Vert(CT) | n/a | - | n/a | 999 | | |
| TCDL | 10.0 | Rep Stress Incr | YES | WB | 0.02 | Horz(CT) | 0.00 | 2 | n/a | n/a | | |
| BCLL | 0.0* | Code | IRC2018/TPI2014 | Matrix-MP | | | | | | | | |
| BCDL | 10.0 | | | | | | | | | | Weight: 26 lb | FT = 20% |

**LUMBER**

| | |
|---|---|
| TOP CHORD | 2x4 SP No.2 |
| BOT CHORD | 2x4 SP No.2 |
| OTHERS | 2x4 SP No.3 |
| WEDGE | Left: 2x4 SP No.3<br>Right: 2x4 SP No.3 |

**BRACING**

| | |
|---|---|
| TOP CHORD | Structural wood sheathing directly applied or 5-0-0 oc purlins. |
| BOT CHORD | Rigid ceiling directly applied or 10-0-0 oc bracing. |

**REACTIONS** All bearings 5-0-0.
(lb) - Max Horiz 2=-52 (LC 11), 7=-52 (LC 11)
Max Uplift All uplift 100 (lb) or less at joint(s) 2, 4, 7, 11
Max Grav All reactions 250 (lb) or less at joint (s) 2, 4, 6, 7, 11

**FORCES** (lb) - Max. Comp./Max. Ten. - All forces 250 (lb) or less except when shown.

**NOTES**

1) Unbalanced roof live loads have been considered for this design.
2) Wind: ASCE 7-16; Vult=130mph (3-second gust) Vasd=103mph; TCDL=6.0psf; BCDL=6.0psf; h=25ft; Cat. II; Exp B; Enclosed; MWFRS (envelope) and C-C Corner (3E) -0-11-6 to 2-0-10, Exterior(2N) 2-0-10 to 2-6-0, Corner(3R) 2-6-0 to 5-6-0, Exterior(2N) 5-6-0 to 5-11-6 zone; cantilever left and right exposed ; end vertical left and right exposed;C-C for members and forces & MWFRS for reactions shown; Lumber DOL=1.60 plate grip DOL=1.33
3) Truss designed for wind loads in the plane of the truss only. For studs exposed to wind (normal to the face), see Standard Industry Gable End Details as applicable, or consult qualified building designer as per ANSI/TPI 1.
4) TCLL: ASCE 7-16; Pr=20.0 psf (roof LL: Lum DOL=1.15 Plate DOL=1.15); Pg=20.0 psf; Pf=13.9 psf (Lum DOL=1.15 Plate DOL=1.15); Is=1.0; Rough Cat B; Fully Exp.; Ce=0.9; Cs=1.00; Ct=1.10
5) This truss has been designed for greater of min roof live load of 12.0 psf or 2.00 times flat roof load of 13.9 psf on overhangs non-concurrent with other live loads.
6) Gable requires continuous bottom chord bearing.
7) Gable studs spaced at 2-0-0 oc.
8) * This truss has been designed for a live load of 20.0psf on the bottom chord in all areas where a rectangle 3-06-00 tall by 2-00-00 wide will fit between the bottom chord and any other members.
9) Provide mechanical connection (by others) of truss to bearing plate capable of withstanding 100 lb uplift at joint (s) 2, 4, 2, 4.
10) This truss is designed in accordance with the 2018 International Residential Code sections R502.11.1 and R802.10.2 and referenced standard ANSI/TPI 1.

**LOAD CASE(S)** Standard

| Job | Truss | Truss Type | Qty | Ply | |
|---|---|---|---|---|---|
| 23090033 - Elev B | E2 | Common | 1 | 1 | Job Reference (optional) |



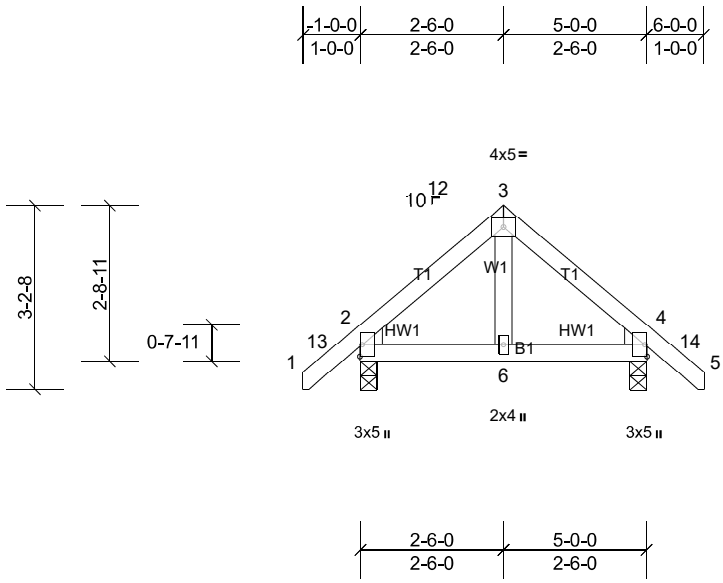


Scale = 1:40.3

| Loading | (psf) | Spacing | 1-11-4 | CSI | | DEFL | in | (loc) | l/defl | L/d | PLATES | GRIP |
|---|---|---|---|---|---|---|---|---|---|---|---|---|
| TCLL (roof) | 20.0 | Plate Grip DOL | 1.15 | TC | 0.08 | Vert(LL) | 0.00 | 6-12 | >999 | 240 | MT20 | 244/190 |
| Snow (Pf/Pg) | 13.9/20.0 | Lumber DOL | 1.15 | BC | 0.08 | Vert(CT) | 0.00 | 6-9 | >999 | 180 | | |
| TCDL | 10.0 | Rep Stress Incr | YES | WB | 0.03 | Horz(CT) | 0.00 | 2 | n/a | n/a | | |
| BCLL | 0.0* | Code | IRC2018/TPI2014 | Matrix-MP | | | | | | | | |
| BCDL | 10.0 | | | | | | | | | | Weight: 26 lb | FT = 20% |

**LUMBER**

TOP CHORD 2x4 SP No.2
BOT CHORD 2x4 SP No.2
WEBS 2x4 SP No.3
WEDGE Left: 2x4 SP No.3
Right: 2x4 SP No.3

**BRACING**

TOP CHORD Structural wood sheathing directly applied or 5-0-0 oc purlins.
BOT CHORD Rigid ceiling directly applied or 10-0-0 oc bracing.

**REACTIONS** (lb/size) 2=208/0-3-8, (min. 0-1-8), 4=208/0-3-8, (min. 0-1-8)
Max Horiz 2=-52 (LC 11)
Max Uplift 2=-1 (LC 13), 4=-1 (LC 14)
Max Grav 2=249 (LC 2), 4=249 (LC 2)

**FORCES** (lb) - Max. Comp./Max. Ten. - All forces 250 (lb) or less except when shown.

**NOTES**

1) Unbalanced roof live loads have been considered for this design.
2) Wind: ASCE 7-16; Vult=130mph (3-second gust) Vasd=103mph; TCDL=6.0psf; BCDL=6.0psf; h=25ft; Cat. II; Exp B; Enclosed; MWFRS (envelope) and C-C Exterior(2E) -0-11-6 to 2-0-10, Interior (1) 2-0-10 to 2-6-0, Exterior(2R) 2-6-0 to 5-6-0, Interior (1) 5-6-0 to 5-11-6 zone; cantilever left and right exposed ; end vertical left and right exposed;C-C for members and forces & MWFRS for reactions shown; Lumber DOL=1.60 plate grip DOL=1.33
3) TCLL: ASCE 7-16; Pr=20.0 psf (roof LL: Lum DOL=1.15 Plate DOL=1.15); Pg=20.0 psf; Pf=13.9 psf (Lum DOL=1.15 Plate DOL=1.15); Is=1.0; Rough Cat B; Fully Exp.; Ce=0.9; Cs=1.00; Ct=1.10
4) This truss has been designed for greater of min roof live load of 12.0 psf or 2.00 times flat roof load of 13.9 psf on overhangs non-concurrent with other live loads.
5) * This truss has been designed for a live load of 20.0psf on the bottom chord in all areas where a rectangle 3-06-00 tall by 2-00-00 wide will fit between the bottom chord and any other members.
6) One H2.5A Simpson Strong-Tie connectors recommended to connect truss to bearing walls due to UPLIFT at jt(s) 2 and 4. This connection is for uplift only and does not consider lateral forces.
7) This truss is designed in accordance with the 2018 International Residential Code sections R502.11.1 and R802.10.2 and referenced standard ANSI/TPI 1.

**LOAD CASE(S)** Standard

| Job | Truss | Truss Type | Qty | Ply | |
|---|---|---|---|---|---|
| 23090033 - Elev B | EJ1 | Jack-Open | 28 | 1 | Job Reference (optional) |



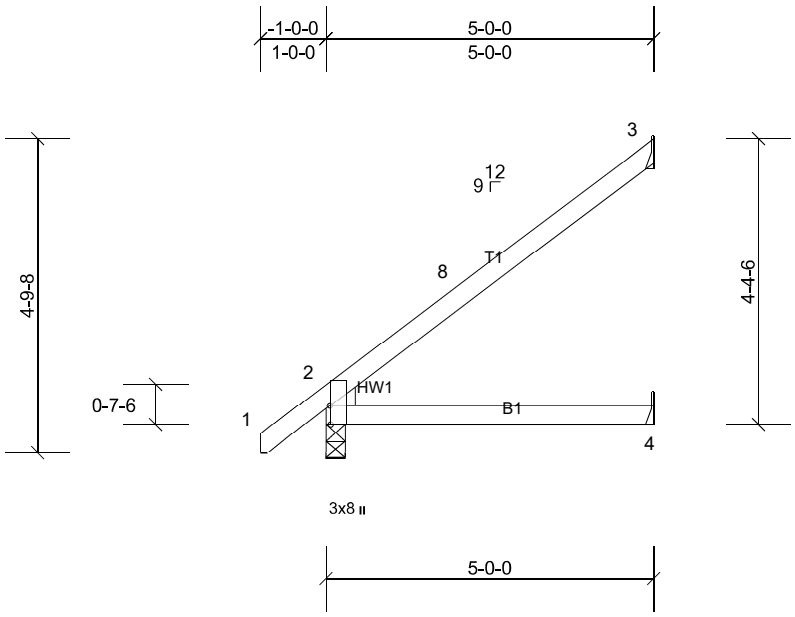


Scale = 1:35.2

Plate Offsets (X, Y): [2:0-3-8,Edge]

| Loading | (psf) | Spacing | 2-0-0 | CSI | | DEFL | in | (loc) | l/defl | L/d | PLATES | GRIP |
|---|---|---|---|---|---|---|---|---|---|---|---|---|
| TCLL (roof) | 20.0 | Plate Grip DOL | 1.15 | TC | 0.36 | Vert(LL) | 0.05 | 4-7 | >999 | 240 | MT20 | 244/190 |
| Snow (Pf/Pg) | 13.9/20.0 | Lumber DOL | 1.15 | BC | 0.34 | Vert(CT) | -0.06 | 4-7 | >956 | 180 | | |
| TCDL | 10.0 | Rep Stress Incr | YES | WB | 0.00 | Horz(CT) | -0.01 | 3 | n/a | n/a | | |
| BCLL | 0.0* | Code | IRC2018/TPI2014 | Matrix-MP | | | | | | | | |
| BCDL | 10.0 | | | | | | | | | | Weight: 19 lb | FT = 20% |

**LUMBER**
TOP CHORD 2x4 SP No.2
BOT CHORD 2x4 SP No.2
WEDGE Left: 2x4 SP No.3

**BRACING**
TOP CHORD Structural wood sheathing directly applied or 5-0-0 oc purlins.
BOT CHORD Rigid ceiling directly applied or 10-0-0 oc bracing.

MiTek recommends that Stabilizers and required cross bracing be installed during truss erection, in accordance with Stabilizer Installation guide.

**REACTIONS** (lb/size) 2=217/0-3-8, (min. 0-1-8), 3=102/Mechanical, (min. 0-1-8), 4=60/Mechanical, (min. 0-1-8)
Max Horiz 2=109 (LC 13)
Max Uplift 3=-55 (LC 13)
Max Grav 2=260 (LC 2), 3=135 (LC 25), 4=68 (LC 25)

**FORCES** (lb) - Max. Comp./Max. Ten. - All forces 250 (lb) or less except when shown.

**NOTES**
1) Wind: ASCE 7-16; Vult=130mph (3-second gust) Vasd=103mph; TCDL=6.0psf; BCDL=6.0psf; h=25ft; Cat. II; Exp B; Enclosed; MWFRS (envelope) and C-C Exterior(2E) -0-11-7 to 2-0-9, Interior (1) 2-0-9 to 4-11-4 zone; cantilever left and right exposed ; end vertical left and right exposed;C-C for members and forces & MWFRS for reactions shown; Lumber DOL=1.60 plate grip DOL=1.33
2) TCLL: ASCE 7-16; Pr=20.0 psf (roof LL: Lum DOL=1.15 Plate DOL=1.15); Pg=20.0 psf; Pf=13.9 psf (Lum DOL=1.15 Plate DOL=1.15); Is=1.0; Rough Cat B; Fully Exp.; Ce=0.9; Cs=1.00; Ct=1.10
3) This truss has been designed for greater of min roof live load of 12.0 psf or 2.00 times flat roof load of 13.9 psf on overhangs non-concurrent with other live loads.
4) * This truss has been designed for a live load of 20.0psf on the bottom chord in all areas where a rectangle 3-06-00 tall by 2-00-00 wide will fit between the bottom chord and any other members.
5) Refer to girder(s) for truss to truss connections.
6) Provide mechanical connection (by others) of truss to bearing plate capable of withstanding 55 lb uplift at joint 3.
7) This truss is designed in accordance with the 2018 International Residential Code sections R502.11.1 and R802.10.2 and referenced standard ANSI/TPI 1.

**LOAD CASE(S)** Standard

| Job | Truss | Truss Type | Qty | Ply | |
|---|---|---|---|---|---|
| 23090033 - Elev B | EJ2 | Jack-Open | 1 | 1 | Job Reference (optional) |



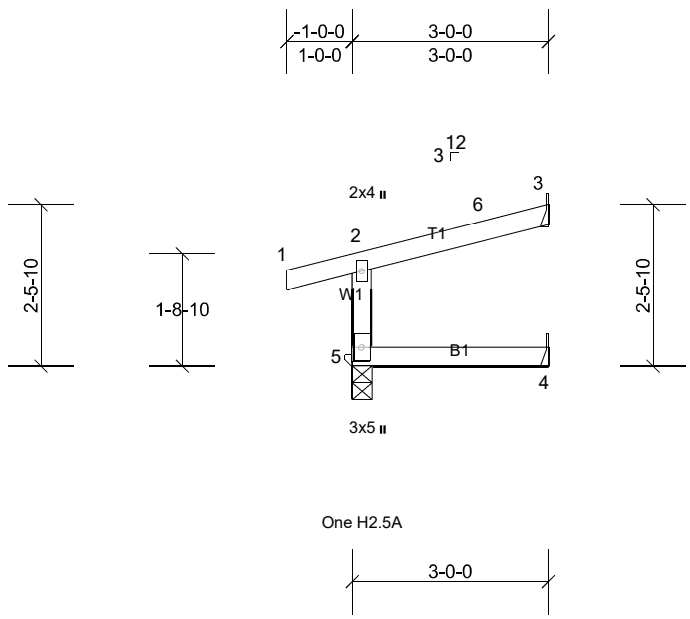


Scale = 1:35.2

| Loading | (psf) | Spacing | 2-0-0 | CSI | | DEFL | in | (loc) | l/defl | L/d | PLATES | GRIP |
|---|---|---|---|---|---|---|---|---|---|---|---|---|
| TCLL (roof) | 20.0 | Plate Grip DOL | 1.15 | TC | 0.27 | Vert(LL) | 0.01 | 4-5 | >999 | 240 | MT20 | 244/190 |
| Snow (Pf/Pg) | 13.9/20.0 | Lumber DOL | 1.15 | BC | 0.15 | Vert(CT) | -0.01 | 4-5 | >999 | 180 | | |
| TCDL | 10.0 | Rep Stress Incr | YES | WB | 0.00 | Horz(CT) | -0.02 | 3 | n/a | n/a | | |
| BCLL | 0.0* | Code | IRC2018/TPI2014 | Matrix-MR | | | | | | | | |
| BCDL | 10.0 | | | | | | | | | | Weight: 12 lb | FT = 20% |

**LUMBER**
TOP CHORD 2x4 SP No.2
BOT CHORD 2x4 SP No.2
WEBS 2x4 SP No.3

**BRACING**
TOP CHORD Structural wood sheathing directly applied or 3-0-0 oc purlins, except end verticals.
BOT CHORD Rigid ceiling directly applied or 10-0-0 oc bracing.

MiTek recommends that Stabilizers and required cross bracing be installed during truss erection, in accordance with Stabilizer Installation guide.

**REACTIONS** (lb/size) 3=56/ Mechanical, (min. 0-1-8), 4=28/ Mechanical, (min. 0-1-8), 5=159/0-3-8, (min. 0-1-8)
Max Horiz 5=40 (LC 12)
Max Uplift 3=-22 (LC 15), 5=-25 (LC 11)
Max Grav 3=77 (LC 22), 4=28 (LC 22), 5=209 (LC 22)

**FORCES** (lb) - Max. Comp./Max. Ten. - All forces 250 (lb) or less except when shown.

**NOTES**
1) Wind: ASCE 7-16; Vult=130mph (3-second gust) Vasd=103mph; TCDL=6.0psf; BCDL=6.0psf; h=25ft; Cat. II; Exp B; Enclosed; MWFRS (envelope) and C-C Exterior(2E) -0-11-13 to 2-0-3, Interior (1) 2-0-3 to 2-11-4 zone; cantilever left and right exposed ; end vertical left and right exposed;C-C for members and forces & MWFRS for reactions shown; Lumber DOL=1.60 plate grip DOL=1.33
2) TCLL: ASCE 7-16; Pr=20.0 psf (roof LL: Lum DOL=1.15 Plate DOL=1.15); Pg=20.0 psf; Pf=13.9 psf (Lum DOL=1.15 Plate DOL=1.15); Is=1.0; Rough Cat B; Fully Exp.; Ce=0.9; Cs=1.00; Ct=1.10; Min. flat roof snow load governs.
3) Unbalanced snow loads have been considered for this design.
4) This truss has been designed for greater of min roof live load of 12.0 psf or 2.00 times flat roof load of 13.9 psf on overhangs non-concurrent with other live loads.
5) * This truss has been designed for a live load of 20.0psf on the bottom chord in all areas where a rectangle 3-06-00 tall by 2-00-00 wide will fit between the bottom chord and any other members.
6) Refer to girder(s) for truss to truss connections.
7) Provide mechanical connection (by others) of truss to bearing plate capable of withstanding 22 lb uplift at joint 3.
8) One H2.5A Simpson Strong-Tie connectors recommended to connect truss to bearing walls due to UPLIFT at jt(s) 5. This connection is for uplift only and does not consider lateral forces.
9) This truss is designed in accordance with the 2018 International Residential Code sections R502.11.1 and R802.10.2 and referenced standard ANSI/TPI 1.

**LOAD CASE(S)** Standard

| Job | Truss | Truss Type | Qty | Ply | |
|---|---|---|---|---|---|
| 23090033 - Elev B | HJ1 | Diagonal Hip Girder | 3 | 1 | Job Reference (optional) |



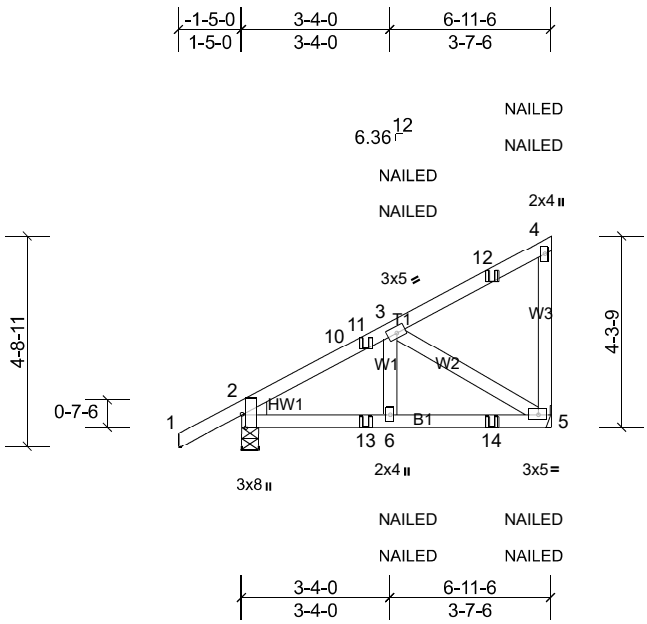


Scale = 1:51.8

Plate Offsets (X, Y): [2:0-3-8,Edge]

| Loading | (psf) | Spacing | 2-0-0 | CSI | | DEFL | in | (loc) | l/defl | L/d | PLATES | GRIP |
|---|---|---|---|---|---|---|---|---|---|---|---|---|
| TCLL (roof) | 20.0 | Plate Grip DOL | 1.15 | TC | 0.27 | Vert(LL) | -0.01 | 5-6 | >999 | 240 | MT20 | 244/190 |
| Snow (Pf/Pg) | 13.9/20.0 | Lumber DOL | 1.15 | BC | 0.23 | Vert(CT) | -0.02 | 5-6 | >999 | 180 | | |
| TCDL | 10.0 | Rep Stress Incr | NO | WB | 0.12 | Horz(CT) | 0.00 | 5 | n/a | n/a | | |
| BCLL | 0.0* | Code | IRC2018/TPI2014 | Matrix-MP | | | | | | | | |
| BCDL | 10.0 | | | | | | | | | | Weight: 39 lb | FT = 20% |

**LUMBER**
TOP CHORD 2x4 SP No.2
BOT CHORD 2x4 SP No.2
WEBS 2x4 SP No.3
WEDGE Left: 2x4 SP No.3

**BRACING**
TOP CHORD Structural wood sheathing directly applied or 6-0-0 oc purlins, except end verticals.
BOT CHORD Rigid ceiling directly applied or 10-0-0 oc bracing.

MiTek recommends that Stabilizers and required cross bracing be installed during truss erection, in accordance with Stabilizer Installation guide.

**REACTIONS** (lb/size) 2=318/0-4-9, (min. 0-1-8), 5=286/Mechanical, (min. 0-1-8)
Max Horiz 2=122 (LC 10)
Max Uplift 2=-11 (LC 11), 5=-61 (LC 8)
Max Grav 2=382 (LC 2), 5=368 (LC 25)

**FORCES** (lb) - Max. Comp./Max. Ten. - All forces 250 (lb) or less except when shown.
TOP CHORD 2-10=-408/36, 10-11=-356/32, 3-11=-330/16
BOT CHORD 2-13=-67/311, 6-13=-56/311, 6-14=-56/311, 5-14=-56/311
WEBS 3-5=-358/54

**NOTES**
1) Wind: ASCE 7-16; Vult=130mph (3-second gust) Vasd=103mph; TCDL=6.0psf; BCDL=6.0psf; h=25ft; Cat. II; Exp B; Enclosed; MWFRS (envelope); cantilever left and right exposed ; end vertical left and right exposed; Lumber DOL=1.60 plate grip DOL=1.33
2) TCLL: ASCE 7-16; Pr=20.0 psf (roof LL: Lum DOL=1.15 Plate DOL=1.15); Pg=20.0 psf; Pf=13.9 psf (Lum DOL=1.15 Plate DOL=1.15); Is=1.0; Rough Cat B; Fully Exp.; Ce=0.9; Cs=1.00; Ct=1.10
3) Unbalanced snow loads have been considered for this design.
4) This truss has been designed for greater of min roof live load of 12.0 psf or 2.00 times flat roof load of 13.9 psf on overhangs non-concurrent with other live loads.
5) * This truss has been designed for a live load of 20.0psf on the bottom chord in all areas where a rectangle 3-06-00 tall by 2-00-00 wide will fit between the bottom chord and any other members.
6) Refer to girder(s) for truss to truss connections.
7) Provide mechanical connection (by others) of truss to bearing plate capable of withstanding 61 lb uplift at joint 5.
8) One H2.5A Simpson Strong-Tie connectors recommended to connect truss to bearing walls due to UPLIFT at jt(s) 2. This connection is for uplift only and does not consider lateral forces.
9) This truss is designed in accordance with the 2018 International Residential Code sections R502.11.1 and R802.10.2 and referenced standard ANSI/TPI 1.
10) "NAILED" indicates 3-10d (0.148"x3") or 2-12d (0.148"x3.25") toe-nails per NDS guidlines.

**LOAD CASE(S)** Standard
1) Dead + Snow (balanced): Lumber Increase=1.15, Plate Increase=1.15
Uniform Loads (lb/ft)
Vert: 1-4=-48, 5-7=-20
Concentrated Loads (lb)
Vert: 12=-33, 13=-5, 14=-41

| Job | Truss | Truss Type | Qty | Ply | |
|---|---|---|---|---|---|
| 23090033 - Elev B | HJ2 | Diagonal Hip Girder | 1 | 1 | Job Reference (optional) |



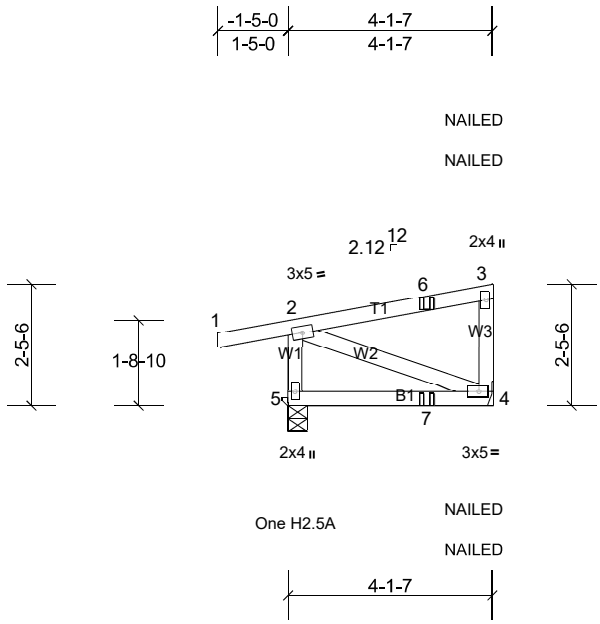


Scale = 1:46.5

| Loading | (psf) | Spacing | 2-0-0 | CSI | | DEFL | in | (loc) | l/defl | L/d | PLATES | GRIP |
|---|---|---|---|---|---|---|---|---|---|---|---|---|
| TCLL (roof) | 20.0 | Plate Grip DOL | 1.15 | TC | 0.24 | Vert(LL) | 0.00 | 4-5 | >999 | 240 | MT20 | 244/190 |
| Snow (Pf/Pg) | 13.9/20.0 | Lumber DOL | 1.15 | BC | 0.13 | Vert(CT) | -0.01 | 4-5 | >999 | 180 | | |
| TCDL | 10.0 | Rep Stress Incr | NO | WB | 0.01 | Horz(CT) | 0.00 | 4 | n/a | n/a | | |
| BCLL | 0.0* | Code | IRC2018/TPI2014 | Matrix-MP | | | | | | | | |
| BCDL | 10.0 | | | | | | | | | | Weight: 25 lb | FT = 20% |

**LUMBER**
TOP CHORD 2x4 SP No.2
BOT CHORD 2x4 SP No.2
WEBS 2x4 SP No.3

**BRACING**
TOP CHORD Structural wood sheathing directly applied or 4-1-7 oc purlins, except end verticals.
BOT CHORD Rigid ceiling directly applied or 10-0-0 oc bracing.

MiTek recommends that Stabilizers and required cross bracing be installed during truss erection, in accordance with Stabilizer Installation guide.

**REACTIONS** (lb/size) 4=115/ Mechanical, (min. 0-1-8), 5=218/0-4-9, (min. 0-1-8)
Max Horiz 5=62 (LC 8)
Max Uplift 4=-19 (LC 8), 5=-58 (LC 7)
Max Grav 4=142 (LC 18), 5=283 (LC 18)

**FORCES** (lb) - Max. Comp./Max. Ten. - All forces 250 (lb) or less except when shown.

**NOTES**
1) Wind: ASCE 7-16; Vult=130mph (3-second gust) Vasd=103mph; TCDL=6.0psf; BCDL=6.0psf; h=25ft; Cat. II; Exp B; Enclosed; MWFRS (envelope); cantilever left and right exposed ; end vertical left and right exposed; Lumber DOL=1.60 plate grip DOL=1.33
2) TCLL: ASCE 7-16; Pr=20.0 psf (roof LL: Lum DOL=1.15 Plate DOL=1.15); Pg=20.0 psf; Pf=13.9 psf (Lum DOL=1.15 Plate DOL=1.15); Is=1.0; Rough Cat B; Fully Exp.; Ce=0.9; Cs=1.00; Ct=1.10; Min. flat roof snow load governs.
3) Unbalanced snow loads have been considered for this design.
4) This truss has been designed for greater of min roof live load of 12.0 psf or 2.00 times flat roof load of 13.9 psf on overhangs non-concurrent with other live loads.
5) * This truss has been designed for a live load of 20.0psf on the bottom chord in all areas where a rectangle 3-06-00 tall by 2-00-00 wide will fit between the bottom chord and any other members.
6) Refer to girder(s) for truss to truss connections.
7) Provide mechanical connection (by others) of truss to bearing plate capable of withstanding 19 lb uplift at joint 4.
8) One H2.5A Simpson Strong-Tie connectors recommended to connect truss to bearing walls due to UPLIFT at jt(s) 5. This connection is for uplift only and does not consider lateral forces.
9) This truss is designed in accordance with the 2018 International Residential Code sections R502.11.1 and R802.10.2 and referenced standard ANSI/TPI 1.
10) "NAILED" indicates 3-10d (0.148"x3") or 2-12d (0.148"x3.25") toe-nails per NDS guidlines.
11) In the LOAD CASE(S) section, loads applied to the face of the truss are noted as front (F) or back (B).

**LOAD CASE(S)** Standard
1) Dead + Snow (balanced): Lumber Increase=1.15, Plate Increase=1.15
Uniform Loads (lb/ft)
Vert: 1-2=-48, 2-3=-48, 4-5=-20
Concentrated Loads (lb)
Vert: 7=0 (F=0, B=0)

| Job | Truss | Truss Type | Qty | Ply | |
|---|---|---|---|---|---|
| 23090033 - Elev B | M1 | Half Hip Girder | 1 | 1 | Job Reference (optional) |



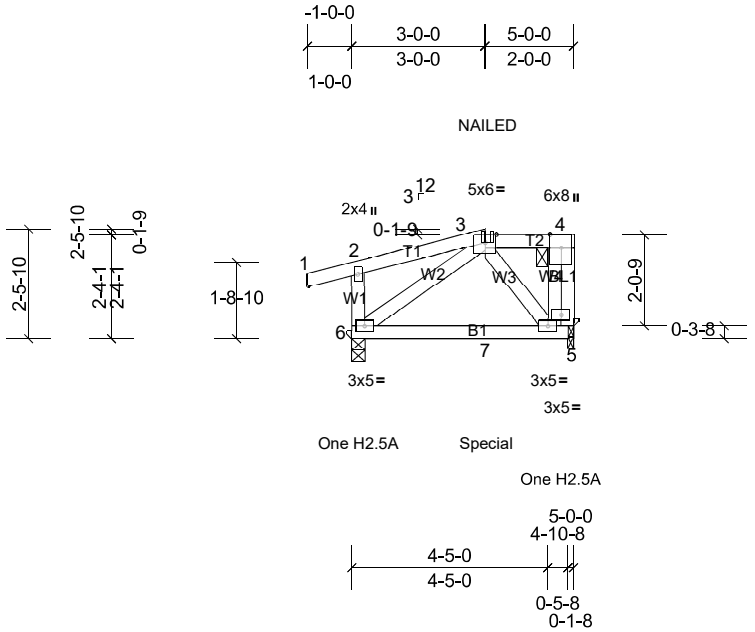


Scale = 1:52

| Loading | (psf) | Spacing | 2-0-0 | CSI | | DEFL | in | (loc) | l/defl | L/d | PLATES | GRIP |
|---|---|---|---|---|---|---|---|---|---|---|---|---|
| TCLL (roof) | 20.0 | Plate Grip DOL | 1.15 | TC | 0.15 | Vert(LL) | -0.03 | 5-6 | >999 | 240 | MT20 | 244/190 |
| Snow (Pf/Pg) | 18.9/20.0 | Lumber DOL | 1.15 | BC | 0.54 | Vert(CT) | -0.08 | 5-6 | >711 | 180 | | |
| TCDL | 10.0 | Rep Stress Incr | NO | WB | 0.03 | Horz(CT) | 0.00 | 5 | n/a | n/a | | |
| BCLL | 0.0* | Code | IRC2018/TPI2014 | Matrix-MP | | | | | | | | |
| BCDL | 10.0 | | | | | | | | | | Weight: 32 lb | FT = 20% |

**LUMBER**

TOP CHORD 2x4 SP No.2
BOT CHORD 2x4 SP No.2
WEBS 2x4 SP No.3
OTHERS 2x4 SP No.3

**BRACING**

TOP CHORD Structural wood sheathing directly applied or 5-0-0 oc purlins, except end verticals, and 2-0-0 oc purlins: 3-4.
BOT CHORD Rigid ceiling directly applied or 10-0-0 oc bracing.

MiTek recommends that Stabilizers and required cross bracing be installed during truss erection, in accordance with Stabilizer Installation guide.

**REACTIONS** (lb/size) 5=253/0-1-8, (min. 0-1-8), 6=273/0-3-8, (min. 0-1-8)
Max Horiz 6=60 (LC 8)
Max Uplift 5=-38 (LC 8), 6=-52 (LC 7)
Max Grav 5=261 (LC 29), 6=348 (LC 33)

**FORCES** (lb) - Max. Comp./Max. Ten. - All forces 250 (lb) or less except when shown.

**NOTES**

1) Unbalanced roof live loads have been considered for this design.
2) Wind: ASCE 7-16; Vult=130mph (3-second gust) Vasd=103mph; TCDL=6.0psf; BCDL=6.0psf; h=25ft; Cat. II; Exp B; Enclosed; MWFRS (envelope); cantilever left and right exposed ; end vertical left and right exposed; Lumber DOL=1.60 plate grip DOL=1.33
3) TCLL: ASCE 7-16; Pr=20.0 psf (roof LL: Lum DOL=1.15 Plate DOL=1.15); Pg=20.0 psf; Pf=18.9 psf (Lum DOL=1.15 Plate DOL=1.15); Is=1.0; Rough Cat B; Fully Exp.; Ce=0.9; Cs=1.00; Ct=1.10, Lu=50-0-0; Min. flat roof snow load governs. Rain surcharge applied to all exposed surfaces with slopes less than 0.500/12 in accordance with IBC 1608.3.4.
4) Unbalanced snow loads have been considered for this design.
5) This truss has been designed for greater of min roof live load of 12.0 psf or 2.00 times flat roof load of 13.9 psf on overhangs non-concurrent with other live loads.
6) Provide adequate drainage to prevent water ponding.
7) * This truss has been designed for a live load of 20.0psf on the bottom chord in all areas where a rectangle 3-06-00 tall by 2-00-00 wide will fit between the bottom chord and any other members.
8) Bearing at joint(s) 5 considers parallel to grain value using ANSI/TPI 1 angle to grain formula. Building designer should verify capacity of bearing surface.
9) Provide mechanical connection (by others) of truss to bearing plate at joint(s) 5.
10) One H2.5A Simpson Strong-Tie connectors recommended to connect truss to bearing walls due to UPLIFT at jt(s) 6 and 5. This connection is for uplift only and does not consider lateral forces.
11) This truss is designed in accordance with the 2018 International Residential Code sections R502.11.1 and R802.10.2 and referenced standard ANSI/TPI 1.
12) Graphical purlin representation does not depict the size or the orientation of the purlin along the top and/or bottom chord.
13) "NAILED" indicates 3-10d (0.148"x3") or 3-12d (0.148"x3.25") toe-nails per NDS guidlines.
14) Hanger(s) or other connection device(s) shall be provided sufficient to support concentrated load(s) 122 lb down and 32 lb up at 3-0-0 on bottom chord. The design/selection of such connection device(s) is the responsibility of others.
15) In the LOAD CASE(S) section, loads applied to the face of the truss are noted as front (F) or back (B).

**LOAD CASE(S)** Standard

1) Dead + Snow (balanced): Lumber Increase=1.15, Plate Increase=1.15
   Uniform Loads (lb/ft)
   Vert: 1-2=-48, 2-3=-48, 3-4=-58, 5-6=-20
   Concentrated Loads (lb)
   Vert: 3=-24 (F), 7=-122 (F)

| Job | Truss | Truss Type | Qty | Ply | |
|---|---|---|---|---|---|
| 23090033 - Elev B | M2 | Monopitch | 3 | 1 | Job Reference (optional) |



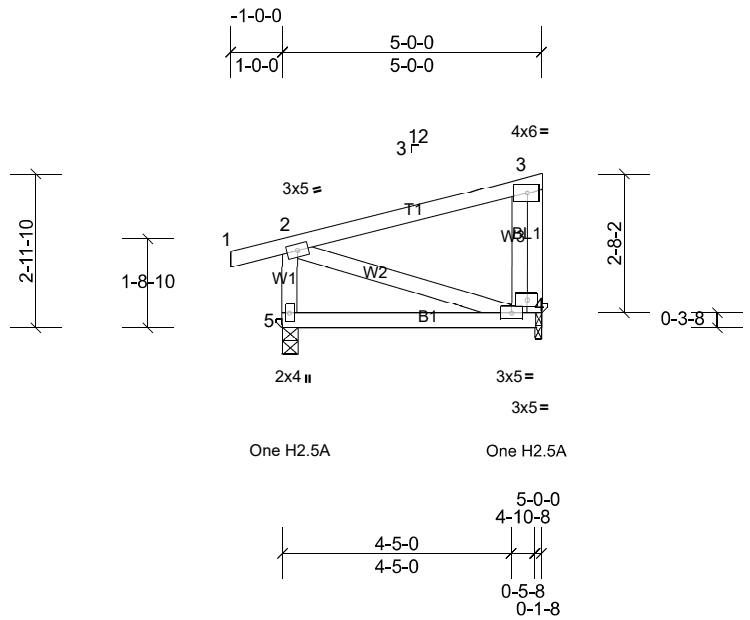


Scale = 1:44.5

| Loading | (psf) | Spacing | 2-0-0 | CSI | | DEFL | in | (loc) | l/defl | L/d | PLATES | GRIP |
|---|---|---|---|---|---|---|---|---|---|---|---|---|
| TCLL (roof) | 20.0 | Plate Grip DOL | 1.15 | TC | 0.40 | Vert(LL) | n/a | - | n/a | 999 | MT20 | 244/190 |
| Snow (Pf/Pg) | 13.9/20.0 | Lumber DOL | 1.15 | BC | 0.18 | Vert(CT) | -0.03 | 4-5 | >999 | 180 | | |
| TCDL | 10.0 | Rep Stress Incr | YES | WB | 0.05 | Horz(CT) | 0.00 | 4 | n/a | n/a | | |
| BCLL | 0.0* | Code | IRC2018/TPI2014 | Matrix-MP | | | | | | | | |
| BCDL | 10.0 | | | | | | | | | | Weight: 32 lb | FT = 20% |

**LUMBER**

| | |
|---|---|
| TOP CHORD | 2x4 SP No.2 |
| BOT CHORD | 2x4 SP No.2 |
| WEBS | 2x4 SP No.3 |
| OTHERS | 2x4 SP No.3 |

**BRACING**

TOP CHORD Structural wood sheathing directly applied or 5-0-0 oc purlins, except end verticals.

BOT CHORD Rigid ceiling directly applied or 10-0-0 oc bracing.

MiTek recommends that Stabilizers and required cross bracing be installed during truss erection, in accordance with Stabilizer Installation guide.

**REACTIONS** (lb/size) 4=148/0-1-8, (min. 0-1-8), 5=215/0-3-8, (min. 0-1-8)
Max Horiz 5=77 (LC 12)
Max Uplift 4=-9 (LC 12), 5=-35 (LC 11)
Max Grav 4=192 (LC 22), 5=288 (LC 22)

**FORCES** (lb) - Max. Comp./Max. Ten. - All forces 250 (lb) or less except when shown.

**NOTES**

1) Wind: ASCE 7-16; Vult=130mph (3-second gust) Vasd=103mph; TCDL=6.0psf; BCDL=6.0psf; h=25ft; Cat. II; Exp B; Enclosed; MWFRS (envelope) and C-C Exterior(2E) -0-11-13 to 2-0-3, Interior (1) 2-0-3 to 4-8-8 zone; cantilever left and right exposed ; end vertical left and right exposed;C-C for members and forces & MWFRS for reactions shown; Lumber DOL=1.60 plate grip DOL=1.33
2) TCLL: ASCE 7-16; Pr=20.0 psf (roof LL: Lum DOL=1.15 Plate DOL=1.15); Pg=20.0 psf; Pf=13.9 psf (Lum DOL=1.15 Plate DOL=1.15); Is=1.0; Rough Cat B; Fully Exp.; Ce=0.9; Cs=1.00; Ct=1.10; Min. flat roof snow load governs.
3) Unbalanced snow loads have been considered for this design.
4) This truss has been designed for greater of min roof live load of 12.0 psf or 2.00 times flat roof load of 13.9 psf on overhangs non-concurrent with other live loads.
5) * This truss has been designed for a live load of 20.0psf on the bottom chord in all areas where a rectangle 3-06-00 tall by 2-00-00 wide will fit between the bottom chord and any other members.
6) Bearing at joint(s) 4 considers parallel to grain value using ANSI/TPI 1 angle to grain formula. Building designer should verify capacity of bearing surface.
7) Provide mechanical connection (by others) of truss to bearing plate at joint(s) 4.
8) One H2.5A Simpson Strong-Tie connectors recommended to connect truss to bearing walls due to UPLIFT at jt(s) 5 and 4. This connection is for uplift only and does not consider lateral forces.
9) This truss is designed in accordance with the 2018 International Residential Code sections R502.11.1 and R802.10.2 and referenced standard ANSI/TPI 1.

**LOAD CASE(S)** Standard

| Job | Truss | Truss Type | Qty | Ply | |
|---|---|---|---|---|---|
| 23090033 - Elev B | M3 | Monopitch Girder | 1 | **2** | Job Reference (optional) |



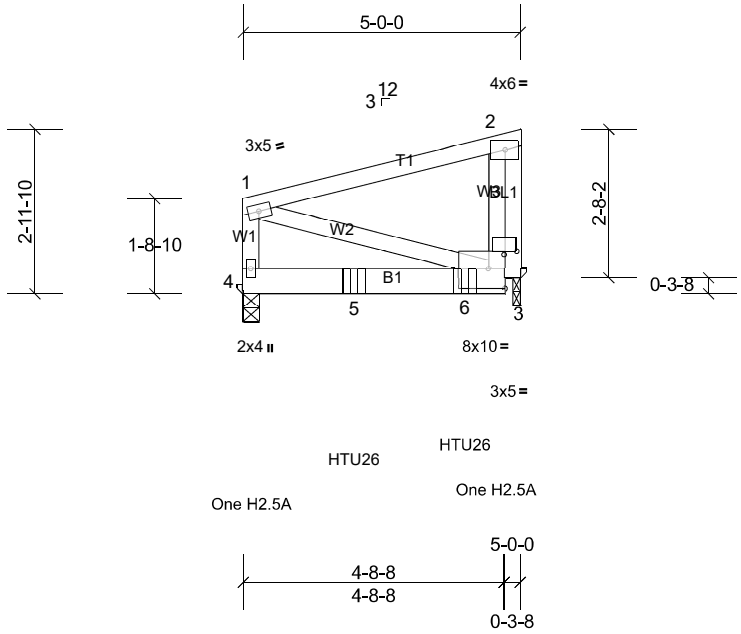


Scale = 1:41.6

Plate Offsets (X, Y): [3:Edge,0-4-4], [3:0-2-8,0-0-12]

| **Loading** | (psf) | **Spacing** | 2-0-0 | **CSI** | | **DEFL** | in | (loc) | l/defl | L/d | **PLATES** | **GRIP** |
|---|---|---|---|---|---|---|---|---|---|---|---|---|
| TCLL (roof) | 20.0 | Plate Grip DOL | 1.15 | TC | 0.24 | Vert(LL) | -0.04 | 3-4 | >999 | 240 | MT20 | 244/190 |
| Snow (Pf/Pg) | 13.9/20.0 | Lumber DOL | 1.15 | BC | 0.84 | Vert(CT) | -0.08 | 3-4 | >697 | 180 | | |
| TCDL | 10.0 | Rep Stress Incr | NO | WB | 0.01 | Horz(CT) | n/a | - | n/a | n/a | | |
| BCLL | 0.0* | Code | IRC2018/TPI2014 | Matrix-MP | | | | | | | | |
| BCDL | 10.0 | | | | | | | | | | Weight: 67 lb | FT = 20% |

**LUMBER**
TOP CHORD 2x4 SP No.2
BOT CHORD 2x6 SP No.2
WEBS 2x4 SP No.3
OTHERS 2x4 SP No.3

**BRACING**
TOP CHORD Structural wood sheathing directly applied or 5-0-0 oc purlins, except end verticals.
BOT CHORD Rigid ceiling directly applied or 6-0-0 oc bracing.

**REACTIONS** (lb/size) 3=1215/0-1-8, (min. 0-1-8), 4=733/0-3-8, (min. 0-1-8)
Max Horiz 4=69 (LC 8)
Max Uplift 3=-90 (LC 8), 4=-50 (LC 7)
Max Grav 3=1644 (LC 27), 4=984 (LC 25)

**FORCES** (lb) - Max. Comp./Max. Ten. - All forces 250 (lb) or less except when shown.

**NOTES**
1) 2-ply truss to be connected together with 10d (0.131"x3") nails as follows:
Top chords connected as follows: 2x4 - 1 row at 0-9-0 oc.
Bottom chords connected as follows: 2x6 - 2 rows staggered at 0-7-0 oc.
Web connected as follows: 2x4 - 1 row at 0-9-0 oc.
2) All loads are considered equally applied to all plies, except if noted as front (F) or back (B) face in the LOAD CASE(S) section. Ply to ply connections have been provided to distribute only loads noted as (F) or (B), unless otherwise indicated.
3) Wind: ASCE 7-16; Vult=130mph (3-second gust) Vasd=103mph; TCDL=6.0psf; BCDL=6.0psf; h=25ft; Cat. II; Exp B; Enclosed; MWFRS (envelope); cantilever left and right exposed ; end vertical left and right exposed; Lumber DOL=1.60 plate grip DOL=1.33
4) TCLL: ASCE 7-16; Pr=20.0 psf (roof LL: Lum DOL=1.15 Plate DOL=1.15); Pg=20.0 psf; Pf=13.9 psf (Lum DOL=1.15 Plate DOL=1.15); Is=1.0; Rough Cat B; Fully Exp.; Ce=0.9; Cs=1.00; Ct=1.10; Min. flat roof snow load governs.
5) Unbalanced snow loads have been considered for this design.
6) * This truss has been designed for a live load of 20.0psf on the bottom chord in all areas where a rectangle 3-06-00 tall by 2-00-00 wide will fit between the bottom chord and any other members.
7) Bearing at joint(s) 3 considers parallel to grain value using ANSI/TPI 1 angle to grain formula. Building designer should verify capacity of bearing surface.
8) Provide mechanical connection (by others) of truss to bearing plate at joint(s) 3.
9) One H2.5A Simpson Strong-Tie connectors recommended to connect truss to bearing walls due to UPLIFT at jt(s) 4 and 3. This connection is for uplift only and does not consider lateral forces.
10) This truss is designed in accordance with the 2018 International Residential Code sections R502.11.1 and R802.10.2 and referenced standard ANSI/TPI 1.
11) Use Simpson Strong-Tie HTU26 (20-10d Girder, 11-10dx1 1/2 Truss) or equivalent spaced at 2-0-0 oc max. starting at 2-0-0 from the left end to 4-0-0 to connect truss(es) B2 (1 ply 2x4 SP) to back face of bottom chord.
12) Fill all nail holes where hanger is in contact with lumber.

**LOAD CASE(S)** Standard
1) Dead + Snow (balanced): Lumber Increase=1.15, Plate Increase=1.15
Uniform Loads (lb/ft)
Vert: 1-2=-48, 3-4=-20
Concentrated Loads (lb)
Vert: 5=-824, 6=-824

| Job | Truss | Truss Type | Qty | Ply | |
|---|---|---|---|---|---|
| 23090033 - Elev B | PB3 | Piggyback | 1 | 1 | Job Reference (optional) |



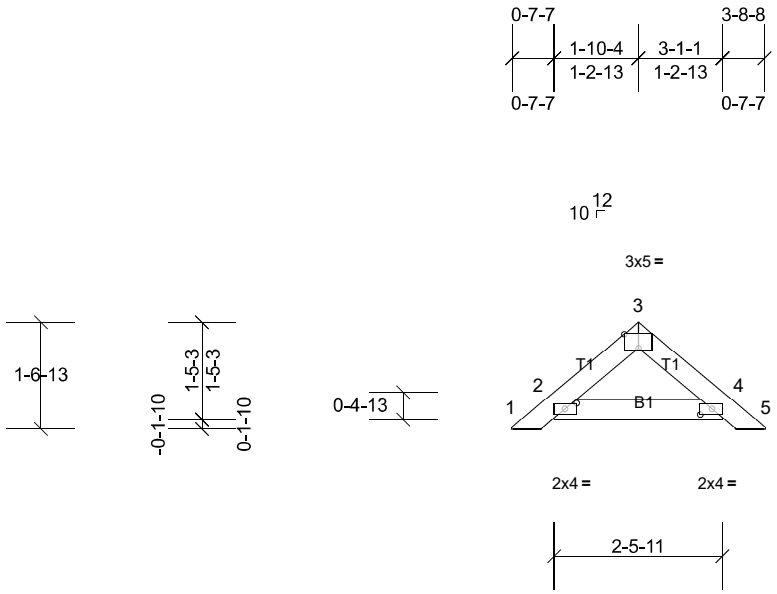


Scale = 1:33.9

Plate Offsets (X, Y): [2:0-2-1,0-1-0], [3:0-2-8,Edge], [4:0-2-1,0-1-0]

| Loading | (psf) | Spacing | 2-0-0 | CSI | | DEFL | in | (loc) | l/defl | L/d | PLATES | GRIP |
|---|---|---|---|---|---|---|---|---|---|---|---|---|
| TCLL (roof) | 20.0 | Plate Grip DOL | 1.15 | TC | 0.02 | Vert(LL) | n/a | - | n/a | 999 | MT20 | 244/190 |
| Snow (Pf/Pg) | 13.9/20.0 | Lumber DOL | 1.15 | BC | 0.03 | Vert(CT) | n/a | - | n/a | 999 | | |
| TCDL | 10.0 | Rep Stress Incr | YES | WB | 0.00 | Horz(CT) | n/a | - | n/a | n/a | | |
| BCLL | 0.0* | Code | IRC2018/TPI2014 | Matrix-MP | | | | | | | | |
| BCDL | 10.0 | | | | | | | | | | Weight: 11 lb | FT = 20% |

**LUMBER**
TOP CHORD 2x4 SP No.2
BOT CHORD 2x4 SP No.2

**BRACING**
TOP CHORD Structural wood sheathing directly applied or 3-9-2 oc purlins.
BOT CHORD Rigid ceiling directly applied or 10-0-0 oc bracing.

MiTek recommends that Stabilizers and required cross bracing be installed during truss erection, in accordance with Stabilizer Installation guide.

**REACTIONS** All bearings 2-5-11.
(lb) - Max Horiz 2=26 (LC 12), 6=26 (LC 12)
Max Uplift All uplift 100 (lb) or less at joint(s) 2, 6
Max Grav All reactions 250 (lb) or less at joint (s) 2, 4, 6, 10

**FORCES** (lb) - Max. Comp./Max. Ten. - All forces 250 (lb) or less except when shown.

**NOTES**
1) Unbalanced roof live loads have been considered for this design.
2) Wind: ASCE 7-16; Vult=130mph (3-second gust) Vasd=103mph; TCDL=6.0psf; BCDL=6.0psf; h=25ft; Cat. II; Exp B; Enclosed; MWFRS (envelope) and C-C Exterior(2E) zone; cantilever left and right exposed ; end vertical left and right exposed;C-C for members and forces & MWFRS for reactions shown; Lumber DOL=1.60 plate grip DOL=1.33
3) Truss designed for wind loads in the plane of the truss only. For studs exposed to wind (normal to the face), see Standard Industry Gable End Details as applicable, or consult qualified building designer as per ANSI/TPI 1.
4) TCLL: ASCE 7-16; Pr=20.0 psf (roof LL: Lum DOL=1.15 Plate DOL=1.15); Pg=20.0 psf; Pf=13.9 psf (Lum DOL=1.15 Plate DOL=1.15); Is=1.0; Rough Cat B; Fully Exp.; Ce=0.9; Cs=1.00; Ct=1.10
5) This truss has been designed for greater of min roof live load of 12.0 psf or 2.00 times flat roof load of 13.9 psf on overhangs non-concurrent with other live loads.
6) Gable requires continuous bottom chord bearing.
7) Gable studs spaced at 2-0-0 oc.
8) * This truss has been designed for a live load of 20.0psf on the bottom chord in all areas where a rectangle 3-06-00 tall by 2-00-00 wide will fit between the bottom chord and any other members.
9) One H2.5A Simpson Strong-Tie connectors recommended to connect truss to bearing walls due to UPLIFT at jt(s) 2. This connection is for uplift only and does not consider lateral forces.
10) This truss is designed in accordance with the 2018 International Residential Code sections R502.11.1 and R802.10.2 and referenced standard ANSI/TPI 1.
11) See Standard Industry Piggyback Truss Connection Detail for Connection to base truss as applicable, or consult qualified building designer.

**LOAD CASE(S)** Standard

| Job | Truss | Truss Type | Qty | Ply | |
|---|---|---|---|---|---|
| 23090033 - Elev B | PB4 | Piggyback | 3 | 1 | Job Reference (optional) |



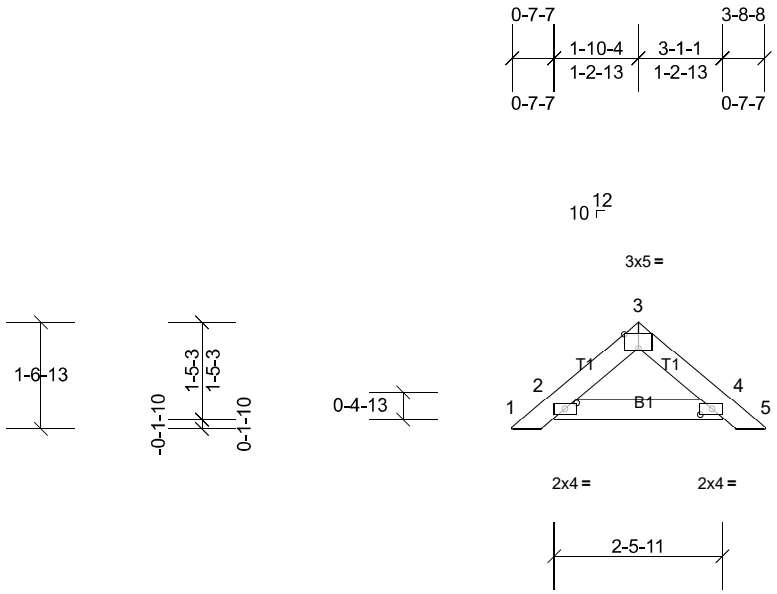


Scale = 1:33.9

Plate Offsets (X, Y): [2:0-2-1,0-1-0], [3:0-2-8,Edge], [4:0-2-1,0-1-0]

| Loading | (psf) | Spacing | 2-0-0 | CSI | | DEFL | in | (loc) | l/defl | L/d | PLATES | GRIP |
|---|---|---|---|---|---|---|---|---|---|---|---|---|
| TCLL (roof) | 20.0 | Plate Grip DOL | 1.15 | TC | 0.02 | Vert(LL) | n/a | - | n/a | 999 | MT20 | 244/190 |
| Snow (Pf/Pg) | 13.9/20.0 | Lumber DOL | 1.15 | BC | 0.03 | Vert(CT) | n/a | - | n/a | 999 | | |
| TCDL | 10.0 | Rep Stress Incr | YES | WB | 0.00 | Horz(CT) | n/a | - | n/a | n/a | | |
| BCLL | 0.0* | Code | IRC2018/TPI2014 | Matrix-MP | | | | | | | | |
| BCDL | 10.0 | | | | | | | | | | Weight: 11 lb | FT = 20% |

**LUMBER**
TOP CHORD 2x4 SP No.2
BOT CHORD 2x4 SP No.2

**BRACING**
TOP CHORD Structural wood sheathing directly applied or 3-9-2 oc purlins.
BOT CHORD Rigid ceiling directly applied or 10-0-0 oc bracing.

MiTek recommends that Stabilizers and required cross bracing be installed during truss erection, in accordance with Stabilizer Installation guide.

**REACTIONS** All bearings 2-5-11.
(lb) - Max Horiz 2=26 (LC 12), 6=26 (LC 12)
Max Uplift All uplift 100 (lb) or less at joint(s) 2, 6
Max Grav All reactions 250 (lb) or less at joint (s) 2, 4, 6, 10

**FORCES** (lb) - Max. Comp./Max. Ten. - All forces 250 (lb) or less except when shown.

**NOTES**
1) Unbalanced roof live loads have been considered for this design.
2) Wind: ASCE 7-16; Vult=130mph (3-second gust) Vasd=103mph; TCDL=6.0psf; BCDL=6.0psf; h=25ft; Cat. II; Exp B; Enclosed; MWFRS (envelope) and C-C Exterior(2E) zone; cantilever left and right exposed ; end vertical left and right exposed;C-C for members and forces & MWFRS for reactions shown; Lumber DOL=1.60 plate grip DOL=1.33
3) Truss designed for wind loads in the plane of the truss only. For studs exposed to wind (normal to the face), see Standard Industry Gable End Details as applicable, or consult qualified building designer as per ANSI/TPI 1.
4) TCLL: ASCE 7-16; Pr=20.0 psf (roof LL: Lum DOL=1.15 Plate DOL=1.15); Pg=20.0 psf; Pf=13.9 psf (Lum DOL=1.15 Plate DOL=1.15); Is=1.0; Rough Cat B; Fully Exp.; Ce=0.9; Cs=1.00; Ct=1.10
5) This truss has been designed for greater of min roof live load of 12.0 psf or 2.00 times flat roof load of 13.9 psf on overhangs non-concurrent with other live loads.
6) Gable requires continuous bottom chord bearing.
7) Gable studs spaced at 4-0-0 oc.
8) * This truss has been designed for a live load of 20.0psf on the bottom chord in all areas where a rectangle 3-06-00 tall by 2-00-00 wide will fit between the bottom chord and any other members.
9) One H2.5A Simpson Strong-Tie connectors recommended to connect truss to bearing walls due to UPLIFT at jt(s) 2. This connection is for uplift only and does not consider lateral forces.
10) This truss is designed in accordance with the 2018 International Residential Code sections R502.11.1 and R802.10.2 and referenced standard ANSI/TPI 1.
11) See Standard Industry Piggyback Truss Connection Detail for Connection to base truss as applicable, or consult qualified building designer.

**LOAD CASE(S)** Standard

| Job | Truss | Truss Type | Qty | Ply | |
|---|---|---|---|---|---|
| 23090033 - Elev B | PB5 | Piggyback | 1 | 1 | Job Reference (optional) |



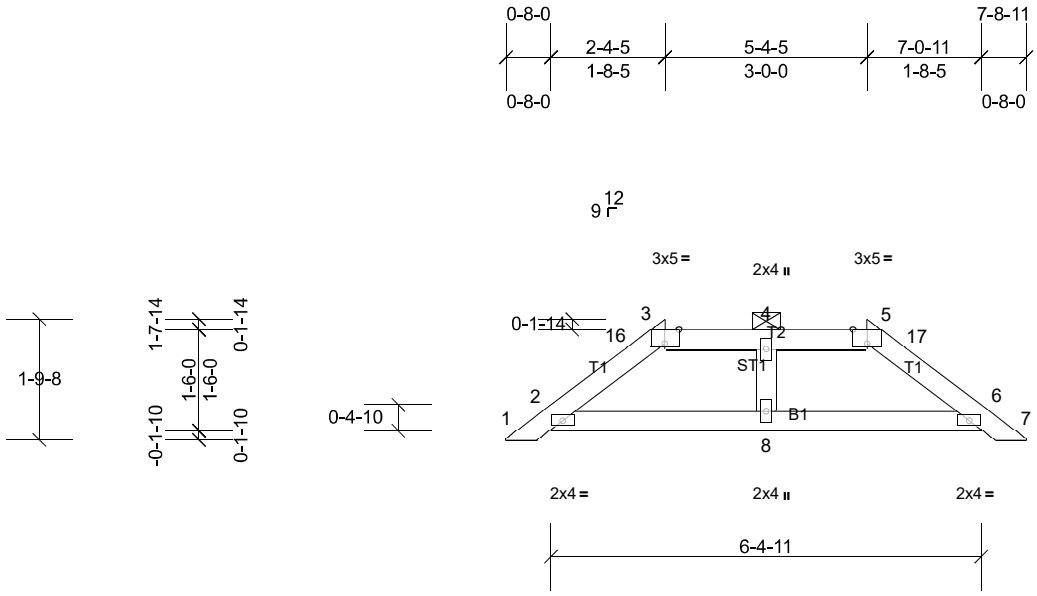


Scale = 1:34.2

Plate Offsets (X, Y): [3:0-2-8,Edge], [5:0-2-8,Edge]

| Loading | (psf) | Spacing | 2-0-0 | CSI | | DEFL | in | (loc) | l/defl | L/d | PLATES | GRIP |
|---|---|---|---|---|---|---|---|---|---|---|---|---|
| TCLL (roof) | 20.0 | Plate Grip DOL | 1.15 | TC | 0.07 | Vert(LL) | n/a | - | n/a | 999 | MT20 | 244/190 |
| Snow (Pf/Pg) | 18.9/20.0 | Lumber DOL | 1.15 | BC | 0.10 | Vert(CT) | n/a | - | n/a | 999 | | |
| TCDL | 10.0 | Rep Stress Incr | YES | WB | 0.04 | Horz(CT) | 0.00 | 13 | n/a | n/a | | |
| BCLL | 0.0* | Code | IRC2018/TPI2014 | Matrix-MP | | | | | | | | |
| BCDL | 10.0 | | | | | | | | | | Weight: 24 lb | FT = 20% |

**LUMBER**
TOP CHORD 2x4 SP No.2
BOT CHORD 2x4 SP No.2
OTHERS 2x4 SP No.3

**BRACING**
TOP CHORD Structural wood sheathing directly applied or 6-0-0 oc purlins, except 2-0-0 oc purlins (6-0-0 max.): 3-5.
BOT CHORD Rigid ceiling directly applied or 10-0-0 oc bracing.

MiTek recommends that Stabilizers and required cross bracing be installed during truss erection, in accordance with Stabilizer Installation guide.

**REACTIONS** All bearings 6-4-11.
(lb) - Max Horiz 2=-29 (LC 13), 9=-29 (LC 13)
Max Uplift All uplift 100 (lb) or less at joint(s) 2, 6, 9, 13
Max Grav All reactions 250 (lb) or less at joint (s) 2, 6, 9, 13 except 8=260 (LC 39)

**FORCES** (lb) - Max. Comp./Max. Ten. - All forces 250 (lb) or less except when shown.

**NOTES**
1) Unbalanced roof live loads have been considered for this design.
2) Wind: ASCE 7-16; Vult=130mph (3-second gust) Vasd=103mph; TCDL=6.0psf; BCDL=6.0psf; h=25ft; Cat. II; Exp B; Enclosed; MWFRS (envelope) and C-C Exterior(2E) zone; cantilever left and right exposed ; end vertical left and right exposed;C-C for members and forces & MWFRS for reactions shown; Lumber DOL=1.60 plate grip DOL=1.33
3) Truss designed for wind loads in the plane of the truss only. For studs exposed to wind (normal to the face), see Standard Industry Gable End Details as applicable, or consult qualified building designer as per ANSI/TPI 1.
4) TCLL: ASCE 7-16; Pr=20.0 psf (roof LL: Lum DOL=1.15 Plate DOL=1.15); Pg=20.0 psf; Pf=18.9 psf (Lum DOL=1.15 Plate DOL=1.15); Is=1.0; Rough Cat B; Fully Exp.; Ce=0.9; Cs=1.00; Ct=1.10, Lu=50-0-0; Min. flat roof snow load governs. Rain surcharge applied to all exposed surfaces with slopes less than 0.500/12 in accordance with IBC 1608.3.4.
5) Unbalanced snow loads have been considered for this design.
6) This truss has been designed for greater of min roof live load of 12.0 psf or 2.00 times flat roof load of 13.9 psf on overhangs non-concurrent with other live loads.
7) Provide adequate drainage to prevent water ponding.
8) Gable requires continuous bottom chord bearing.
9) Gable studs spaced at 4-0-0 oc.
10) * This truss has been designed for a live load of 20.0psf on the bottom chord in all areas where a rectangle 3-06-00 tall by 2-00-00 wide will fit between the bottom chord and any other members.
11) One H2.5A Simpson Strong-Tie connectors recommended to connect truss to bearing walls due to UPLIFT at jt(s) 2 and 6. This connection is for uplift only and does not consider lateral forces.
12) This truss is designed in accordance with the 2018 International Residential Code sections R502.11.1 and R802.10.2 and referenced standard ANSI/TPI 1.
13) See Standard Industry Piggyback Truss Connection Detail for Connection to base truss as applicable, or consult qualified building designer.
14) Graphical purlin representation does not depict the size or the orientation of the purlin along the top and/or bottom chord.

**LOAD CASE(S)** Standard

| Job | Truss | Truss Type | Qty | Ply | |
|---|---|---|---|---|---|
| 23090033 - Elev B | PB6 | Piggyback | 3 | 1 | Job Reference (optional) |



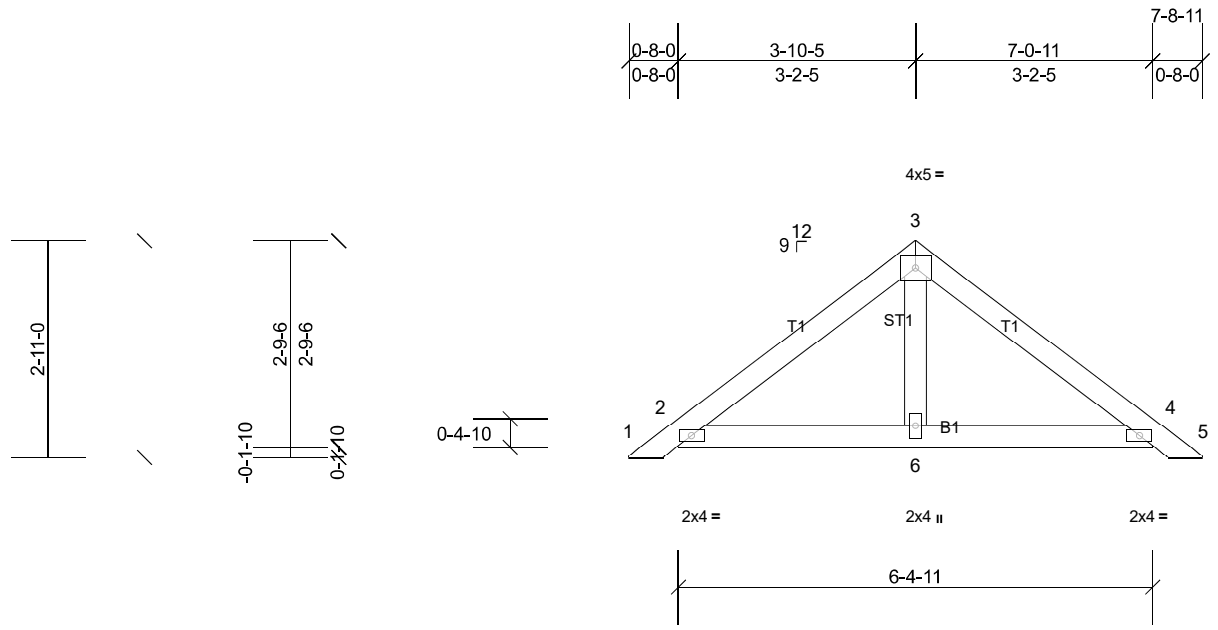


Scale = 1:31

| Loading | (psf) | Spacing | 2-0-0 | CSI | | DEFL | in | (loc) | l/defl | L/d | PLATES | GRIP |
|---|---|---|---|---|---|---|---|---|---|---|---|---|
| TCLL (roof) | 20.0 | Plate Grip DOL | 1.15 | TC | 0.13 | Vert(LL) | n/a | - | n/a | 999 | MT20 | 244/190 |
| Snow (Pf/Pg) | 13.9/20.0 | Lumber DOL | 1.15 | BC | 0.13 | Vert(CT) | n/a | - | n/a | 999 | | |
| TCDL | 10.0 | Rep Stress Incr | YES | WB | 0.02 | Horz(CT) | 0.00 | 2 | n/a | n/a | | |
| BCLL | 0.0* | Code | IRC2018/TPI2014 | Matrix-MP | | | | | | | | |
| BCDL | 10.0 | | | | | | | | | | Weight: 27 lb | FT = 20% |

**LUMBER**
TOP CHORD 2x4 SP No.2
BOT CHORD 2x4 SP No.2
OTHERS 2x4 SP No.3

**BRACING**
TOP CHORD Structural wood sheathing directly applied or 6-0-0 oc purlins.
BOT CHORD Rigid ceiling directly applied or 10-0-0 oc bracing.

MiTek recommends that Stabilizers and required cross bracing be installed during truss erection, in accordance with Stabilizer Installation guide.

**REACTIONS** All bearings 6-4-11.
(lb) - Max Horiz 2=51 (LC 12), 7=51 (LC 12)
Max Uplift All uplift 100 (lb) or less at joint(s) 2, 4, 7, 11
Max Grav All reactions 250 (lb) or less at joint (s) 2, 4, 6, 7, 11

**FORCES** (lb) - Max. Comp./Max. Ten. - All forces 250 (lb) or less except when shown.

**NOTES**
1) Unbalanced roof live loads have been considered for this design.
2) Wind: ASCE 7-16; Vult=130mph (3-second gust) Vasd=103mph; TCDL=6.0psf; BCDL=6.0psf; h=25ft; Cat. II; Exp B; Enclosed; MWFRS (envelope) and C-C Exterior(2E) 0-3-1 to 3-3-1, Interior (1) 3-3-1 to 3-10-11, Exterior(2R) 3-10-11 to 6-8-11, Interior (1) 6-8-11 to 7-6-4 zone; cantilever left and right exposed ; end vertical left and right exposed;C-C for members and forces & MWFRS for reactions shown; Lumber DOL=1.60 plate grip DOL=1.33
3) Truss designed for wind loads in the plane of the truss only. For studs exposed to wind (normal to the face), see Standard Industry Gable End Details as applicable, or consult qualified building designer as per ANSI/TPI 1.
4) TCLL: ASCE 7-16; Pr=20.0 psf (roof LL: Lum DOL=1.15 Plate DOL=1.15); Pg=20.0 psf; Pf=13.9 psf (Lum DOL=1.15 Plate DOL=1.15); Is=1.0; Rough Cat B; Fully Exp.; Ce=0.9; Cs=1.00; Ct=1.10
5) This truss has been designed for greater of min roof live load of 12.0 psf or 2.00 times flat roof load of 13.9 psf on overhangs non-concurrent with other live loads.
6) Gable requires continuous bottom chord bearing.
7) Gable studs spaced at 4-0-0 oc.
8) * This truss has been designed for a live load of 20.0psf on the bottom chord in all areas where a rectangle 3-06-00 tall by 2-00-00 wide will fit between the bottom chord and any other members.
9) One H2.5A Simpson Strong-Tie connectors recommended to connect truss to bearing walls due to UPLIFT at jt(s) 2 and 4. This connection is for uplift only and does not consider lateral forces.
10) This truss is designed in accordance with the 2018 International Residential Code sections R502.11.1 and R802.10.2 and referenced standard ANSI/TPI 1.
11) See Standard Industry Piggyback Truss Connection Detail for Connection to base truss as applicable, or consult qualified building designer.

**LOAD CASE(S)** Standard

| Job | Truss | Truss Type | Qty | Ply | |
|---|---|---|---|---|---|
| 23090033 - Elev B | PB7 | Piggyback | 1 | 1 | Job Reference (optional) |



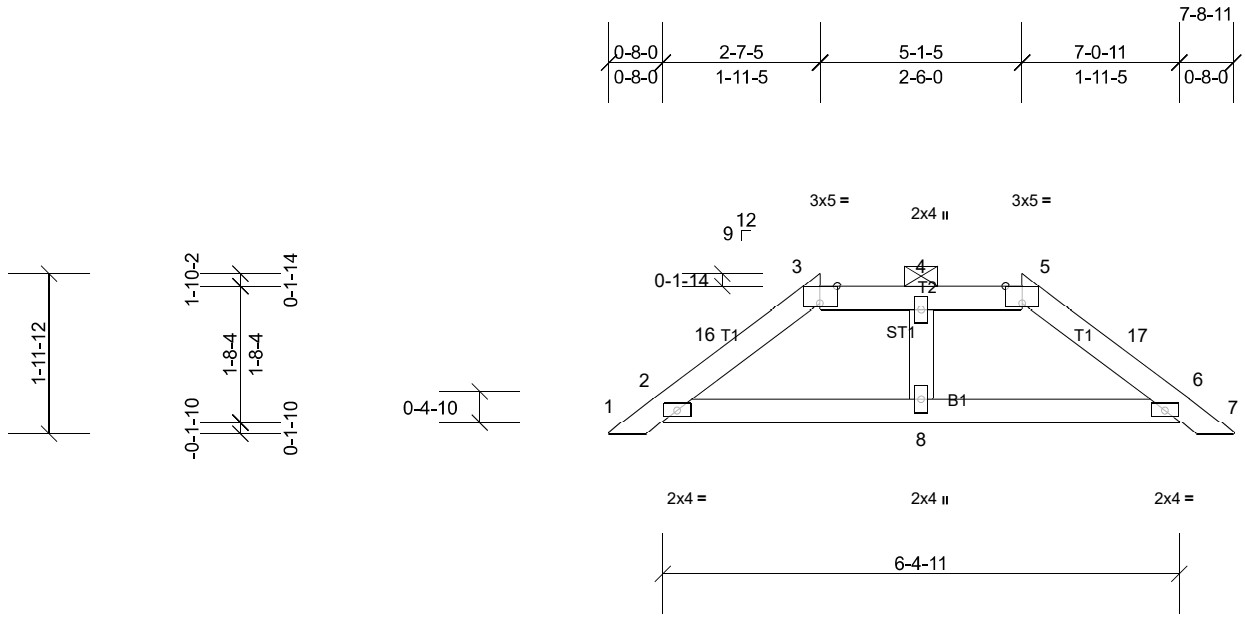


Scale = 1:28.5

Plate Offsets (X, Y): [3:0-2-8,Edge], [5:0-2-8,Edge]

| Loading | (psf) | Spacing | 2-0-0 | CSI | | DEFL | in | (loc) | l/defl | L/d | PLATES | GRIP |
|---|---|---|---|---|---|---|---|---|---|---|---|---|
| TCLL (roof) | 20.0 | Plate Grip DOL | 1.15 | TC | 0.07 | Vert(LL) | n/a | - | n/a | 999 | MT20 | 244/190 |
| Snow (Pf/Pg) | 18.9/20.0 | Lumber DOL | 1.15 | BC | 0.12 | Vert(CT) | n/a | - | n/a | 999 | | |
| TCDL | 10.0 | Rep Stress Incr | YES | WB | 0.03 | Horz(CT) | 0.00 | 13 | n/a | n/a | | |
| BCLL | 0.0* | Code | IRC2018/TPI2014 | Matrix-MP | | | | | | | | |
| BCDL | 10.0 | | | | | | | | | | Weight: 25 lb | FT = 20% |

**LUMBER**
TOP CHORD 2x4 SP No.2
BOT CHORD 2x4 SP No.2
OTHERS 2x4 SP No.3

**BRACING**
TOP CHORD Structural wood sheathing directly applied or 6-0-0 oc purlins, except
2-0-0 oc purlins (6-0-0 max.): 3-5.
BOT CHORD Rigid ceiling directly applied or 10-0-0 oc bracing.

MiTek recommends that Stabilizers and required cross bracing be installed during truss erection, in accordance with Stabilizer Installation guide.

**REACTIONS** All bearings 6-4-11.
(lb) - Max Horiz 2=32 (LC 14), 9=32 (LC 14)
Max Uplift All uplift 100 (lb) or less at joint(s) 2, 6, 9, 13
Max Grav All reactions 250 (lb) or less at joint (s) 2, 6, 8, 9, 13

**FORCES** (lb) - Max. Comp./Max. Ten. - All forces 250 (lb) or less except when shown.

**NOTES**
1) Unbalanced roof live loads have been considered for this design.
2) Wind: ASCE 7-16; Vult=130mph (3-second gust) Vasd=103mph; TCDL=6.0psf; BCDL=6.0psf; h=25ft; Cat. II; Exp B; Enclosed; MWFRS (envelope) and C-C Exterior(2E) zone; cantilever left and right exposed ; end vertical left and right exposed;C-C for members and forces & MWFRS for reactions shown; Lumber DOL=1.60 plate grip DOL=1.33
3) Truss designed for wind loads in the plane of the truss only. For studs exposed to wind (normal to the face), see Standard Industry Gable End Details as applicable, or consult qualified building designer as per ANSI/TPI 1.
4) TCLL: ASCE 7-16; Pr=20.0 psf (roof LL: Lum DOL=1.15 Plate DOL=1.15); Pg=20.0 psf; Pf=18.9 psf (Lum DOL=1.15 Plate DOL=1.15); Is=1.0; Rough Cat B; Fully Exp.; Ce=0.9; Cs=1.00; Ct=1.10, Lu=50-0-0; Min. flat roof snow load governs. Rain surcharge applied to all exposed surfaces with slopes less than 0.500/12 in accordance with IBC 1608.3.4.
5) Unbalanced snow loads have been considered for this design.
6) This truss has been designed for greater of min roof live load of 12.0 psf or 2.00 times flat roof load of 13.9 psf on overhangs non-concurrent with other live loads.
7) Provide adequate drainage to prevent water ponding.
8) Gable requires continuous bottom chord bearing.
9) Gable studs spaced at 4-0-0 oc.
10) * This truss has been designed for a live load of 20.0psf on the bottom chord in all areas where a rectangle 3-06-00 tall by 2-00-00 wide will fit between the bottom chord and any other members.
11) One H2.5A Simpson Strong-Tie connectors recommended to connect truss to bearing walls due to UPLIFT at jt(s) 2 and 6. This connection is for uplift only and does not consider lateral forces.
12) This truss is designed in accordance with the 2018 International Residential Code sections R502.11.1 and R802.10.2 and referenced standard ANSI/TPI 1.
13) See Standard Industry Piggyback Truss Connection Detail for Connection to base truss as applicable, or consult qualified building designer.
14) Graphical purlin representation does not depict the size or the orientation of the purlin along the top and/or bottom chord.

**LOAD CASE(S)** Standard

| Job | Truss | Truss Type | Qty | Ply | |
|---|---|---|---|---|---|
| 23090033 - Elev B | VL1 | Valley | 1 | 1 | Job Reference (optional) |



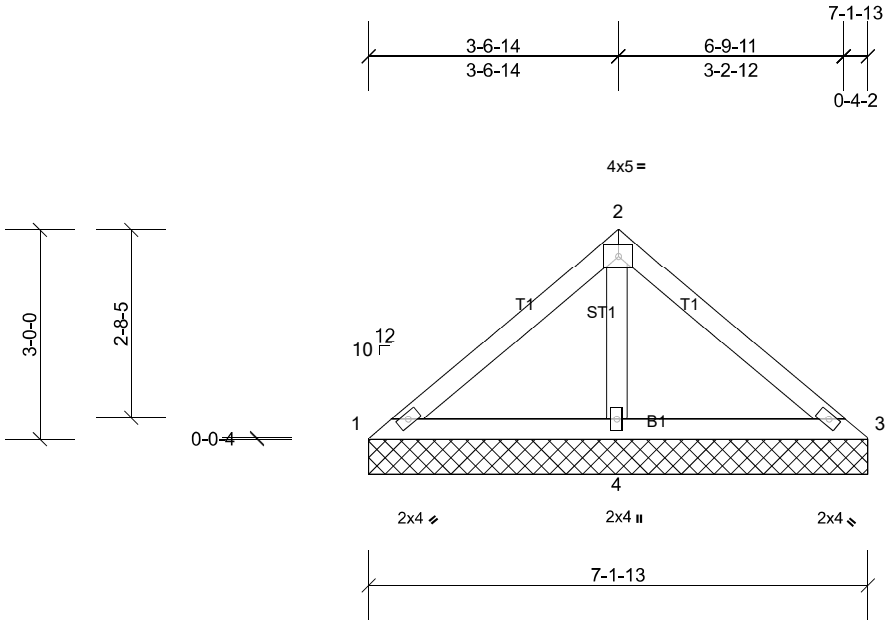


Scale = 1:33

| Loading | (psf) | Spacing | 2-0-0 | CSI | | DEFL | in | (loc) | l/defl | L/d | PLATES | GRIP |
|---|---|---|---|---|---|---|---|---|---|---|---|---|
| TCLL (roof) | 20.0 | Plate Grip DOL | 1.15 | TC | 0.18 | Vert(LL) | n/a | - | n/a | 999 | MT20 | 244/190 |
| Snow (Pf/Pg) | 13.9/20.0 | Lumber DOL | 1.15 | BC | 0.16 | Vert(TL) | n/a | - | n/a | 999 | | |
| TCDL | 10.0 | Rep Stress Incr | YES | WB | 0.10 | Horiz(TL) | 0.00 | 9 | n/a | n/a | | |
| BCLL | 0.0* | Code | IRC2018/TPI2014 | Matrix-MP | | | | | | | | |
| BCDL | 10.0 | | | | | | | | | | Weight: 27 lb | FT = 20% |

**LUMBER**
TOP CHORD 2x4 SP No.2
BOT CHORD 2x4 SP No.2
OTHERS 2x4 SP No.3

**BRACING**
TOP CHORD Structural wood sheathing directly applied or 7-1-13 oc purlins.
BOT CHORD Rigid ceiling directly applied or 6-0-0 oc bracing.

MiTek recommends that Stabilizers and required cross bracing be installed during truss erection, in accordance with Stabilizer Installation guide.

**REACTIONS** All bearings 7-1-13.
(lb) - Max Horiz 1=53 (LC 10)
Max Uplift All uplift 100 (lb) or less at joint(s) 1, 3, 9
Max Grav All reactions 250 (lb) or less at joint (s) 1, 3, 9 except 4=577 (LC 2)

**FORCES** (lb) - Max. Comp./Max. Ten. - All forces 250 (lb) or less except when shown.
TOP CHORD 1-2=-75/268, 2-3=-76/272
WEBS 2-4=-445/181

**NOTES**
1) Unbalanced roof live loads have been considered for this design.
2) Wind: ASCE 7-16; Vult=130mph (3-second gust) Vasd=103mph; TCDL=6.0psf; BCDL=6.0psf; h=25ft; Cat. II; Exp B; Enclosed; MWFRS (envelope) and C-C Exterior(2E) 0-0-5 to 3-0-5, Interior (1) 3-0-5 to 3-7-3, Exterior(2R) 3-7-3 to 6-4-12, Interior (1) 6-4-12 to 7-2-2 zone; cantilever left and right exposed ; end vertical left and right exposed;C-C for members and forces & MWFRS for reactions shown; Lumber DOL=1.60 plate grip DOL=1.33
3) TCLL: ASCE 7-16; Pr=20.0 psf (roof LL: Lum DOL=1.15 Plate DOL=1.15); Pg=20.0 psf; Pf=13.9 psf (Lum DOL=1.15 Plate DOL=1.15); Is=1.0; Rough Cat B; Fully Exp.; Ce=0.9; Cs=1.00; Ct=1.10
4) Gable requires continuous bottom chord bearing.
5) * This truss has been designed for a live load of 20.0psf on the bottom chord in all areas where a rectangle 3-06-00 tall by 2-00-00 wide will fit between the bottom chord and any other members.
6) Provide mechanical connection (by others) of truss to bearing plate capable of withstanding 100 lb uplift at joint (s) 1, 3, 3.
7) This truss is designed in accordance with the 2018 International Residential Code sections R502.11.1 and R802.10.2 and referenced standard ANSI/TPI 1.

**LOAD CASE(S)** Standard

| Job | Truss | Truss Type | Qty | Ply | |
|---|---|---|---|---|---|
| 23090033 - Elev B | VL2 | Valley | 1 | 1 | Job Reference (optional) |



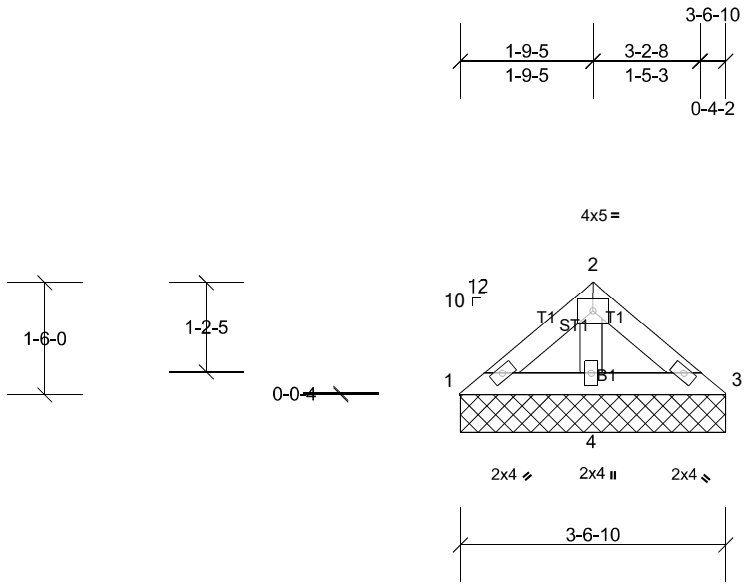


Scale = 1:30.8

| Loading | (psf) | Spacing | 2-0-0 | CSI | | DEFL | in | (loc) | l/defl | L/d | PLATES | GRIP |
|---|---|---|---|---|---|---|---|---|---|---|---|---|
| TCLL (roof) | 20.0 | Plate Grip DOL | 1.15 | TC | 0.02 | Vert(LL) | n/a | - | n/a | 999 | MT20 | 244/190 |
| Snow (Pf/Pg) | 13.9/20.0 | Lumber DOL | 1.15 | BC | 0.04 | Vert(TL) | n/a | - | n/a | 999 | | |
| TCDL | 10.0 | Rep Stress Incr | YES | WB | 0.02 | Horiz(TL) | 0.00 | 3 | n/a | n/a | | |
| BCLL | 0.0 * | Code | IRC2018/TPI2014 | Matrix-MP | | | | | | | | |
| BCDL | 10.0 | | | | | | | | | | Weight: 12 lb | FT = 20% |

**LUMBER**
TOP CHORD 2x4 SP No.2
BOT CHORD 2x4 SP No.2
OTHERS 2x4 SP No.3

**BRACING**
TOP CHORD Structural wood sheathing directly applied or 3-6-10 oc purlins.
BOT CHORD Rigid ceiling directly applied or 6-0-0 oc bracing.

MiTek recommends that Stabilizers and required cross bracing be installed during truss erection, in accordance with Stabilizer Installation guide.

**REACTIONS** (lb/size) 1=37/3-6-10, (min. 0-1-8), 3=39/3-6-10, (min. 0-1-8), 4=164/3-6-10, (min. 0-1-8)
Max Horiz 1=-25 (LC 11)
Max Uplift 3=-1 (LC 14)
Max Grav 1=50 (LC 30), 3=52 (LC 31), 4=194 (LC 2)

**FORCES** (lb) - Max. Comp./Max. Ten. - All forces 250 (lb) or less except when shown.

**NOTES**
1) Unbalanced roof live loads have been considered for this design.
2) Wind: ASCE 7-16; Vult=130mph (3-second gust) Vasd=103mph; TCDL=6.0psf; BCDL=6.0psf; h=25ft; Cat. II; Exp B; Enclosed; MWFRS (envelope) and C-C Exterior(2E) zone; cantilever left and right exposed ; end vertical left and right exposed;C-C for members and forces & MWFRS for reactions shown; Lumber DOL=1.60 plate grip DOL=1.33
3) TCLL: ASCE 7-16; Pr=20.0 psf (roof LL: Lum DOL=1.15 Plate DOL=1.15); Pg=20.0 psf; Pf=13.9 psf (Lum DOL=1.15 Plate DOL=1.15); Is=1.0; Rough Cat B; Fully Exp.; Ce=0.9; Cs=1.00; Ct=1.10
4) Gable requires continuous bottom chord bearing.
5) * This truss has been designed for a live load of 20.0psf on the bottom chord in all areas where a rectangle 3-06-00 tall by 2-00-00 wide will fit between the bottom chord and any other members.
6) Provide mechanical connection (by others) of truss to bearing plate capable of withstanding 1 lb uplift at joint 3.
7) This truss is designed in accordance with the 2018 International Residential Code sections R502.11.1 and R802.10.2 and referenced standard ANSI/TPI 1.

**LOAD CASE(S)** Standard