Job	Truss	Truss Type	Qty	Ply	Lincoln A GRH-2nd Floor-Lincoln A GRH
24050001-B	CJ02	Diagonal Hip Girder	1	1	Job Reference (optional)

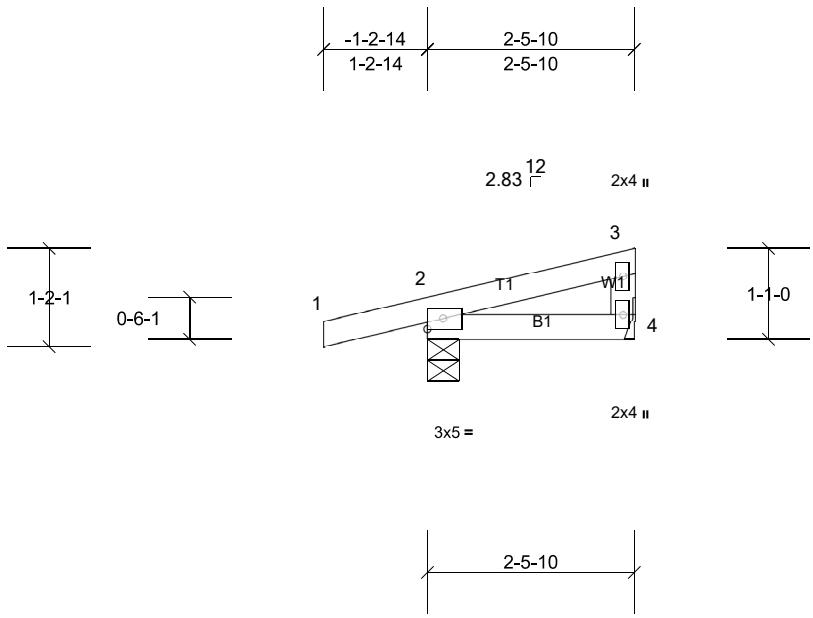

Scale = 1:27.5

Loading	(psf)	Spacing	2-0-0	CSI		DEFL	in	(loc)	l/defl	L/d	PLATES	GRIP
TCLL (roof)	20.0	Plate Grip DOL	1.15	TC	0.15	Vert(LL)	0.00	4-7	>999	240	MT20	244/190
Snow (Pf)	20.0	Lumber DOL	1.15	BC	0.04	Vert(CT)	0.00	4-7	>999	180		
TCDL	10.0	Rep Stress Incr	NO	WB	0.00	Horz(CT)	0.00	2	n/a	n/a		
BCLL	0.0*	Code	IRC2018/TPI2014	Matrix-MP								
BCDL	10.0										Weight: 10 lb	FT = 20%

LUMBER
TOP CHORD 2x4 SP No.2
BOT CHORD 2x4 SP No.2
WEBS 2x4 SP No.3

BRACING
TOP CHORD Structural wood sheathing directly applied or 2-5-10 oc purlins, except end verticals.
BOT CHORD Rigid ceiling directly applied or 10-0-0 oc bracing.

MiTek recommends that Stabilizers and required cross bracing be installed during truss erection, in accordance with Stabilizer Installation guide.

REACTIONS (lb/size) 2=187/0-4-9, (min. 0-1-8), 4=73/Mechanical, (min. 0-1-8)
Max Horiz 2=32 (LC 11)
Max Uplift 2=-70 (LC 8), 4=-11 (LC 12)
Max Grav 2=243 (LC 19), 4=90 (LC 19)

FORCES (lb) - Max. Comp./Max. Ten. - All forces 250 (lb) or less except when shown.

NOTES
1) Wind: ASCE 7-16; Vult=130mph (3-second gust) Vasd=103mph; TCDL=6.0psf; BCDL=6.0psf; h=25ft; Cat. II; Exp B; Enclosed; MWFRS (envelope) exterior zone; cantilever left and right exposed ; end vertical left and right exposed; Lumber DOL=1.60 plate grip DOL=1.60
2) TCLL: ASCE 7-16; Pr=20.0 psf (roof LL: Lum DOL=1.15 Plate DOL=1.15); Pf=20.0 psf (Lum DOL=1.15 Plate DOL=1.15); Is=1.0; Rough Cat B; Fully Exp.; Ce=0.9; Cs=1.00; Ct=1.10
3) Unbalanced snow loads have been considered for this design.
4) This truss has been designed for greater of min roof live load of 12.0 psf or 1.00 times flat roof load of 20.0 psf on overhangs non-concurrent with other live loads.
5) This truss has been designed for a 10.0 psf bottom chord live load nonconcurrent with any other live loads.
6) * This truss has been designed for a live load of 20.0psf on the bottom chord in all areas where a rectangle 3-06-00 tall by 2-00-00 wide will fit between the bottom chord and any other members.
7) Refer to girder(s) for truss to truss connections.
8) Provide mechanical connection (by others) of truss to bearing plate capable of withstanding 11 lb uplift at joint 4.
9) One H2.5A Simpson Strong-Tie connectors recommended to connect truss to bearing walls due to UPLIFT at jt(s) 2. This connection is for uplift only and does not consider lateral forces.
10) This truss is designed in accordance with the 2018 International Residential Code sections R502.11.1 and R802.10.2 and referenced standard ANSI/TPI 1.

LOAD CASE(S) Standard

Job	Truss	Truss Type	Qty	Ply	Lincoln A GRH-2nd Floor-Lincoln A GRH
24050001-B	CJ06	Diagonal Hip Girder	6	1	Job Reference (optional)

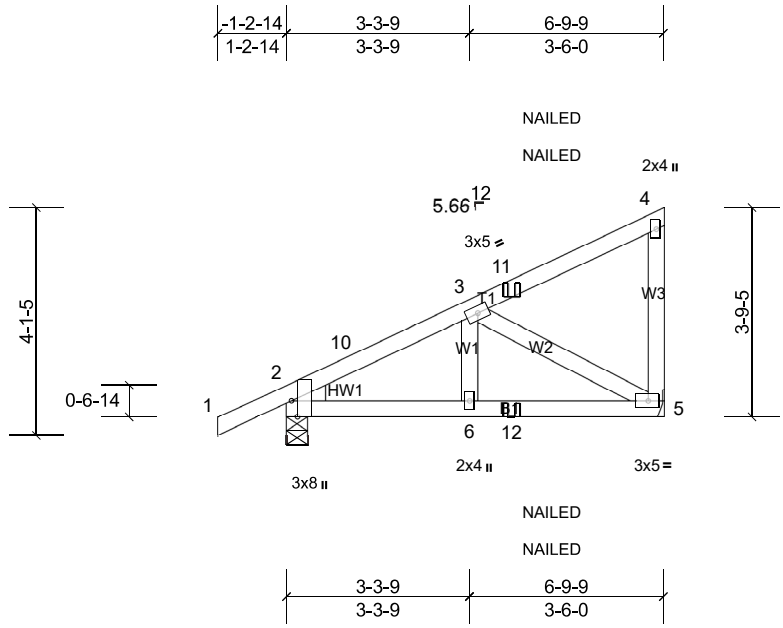

Scale = 1:41.6

Plate Offsets (X, Y): [2:0-3-8,Edge]

Loading	(psf)	Spacing	2-0-0	CSI		DEFL	in	(loc)	l/defl	L/d	PLATES	GRIP
TCLL (roof)	20.0	Plate Grip DOL	1.15	TC	0.26	Vert(LL)	-0.01	5-6	>999	240	MT20	244/190
Snow (Pf)	20.0	Lumber DOL	1.15	BC	0.19	Vert(CT)	-0.01	5-6	>999	180		
TCDL	10.0	Rep Stress Incr	NO	WB	0.15	Horz(CT)	0.00	5	n/a	n/a		
BCLL	0.0*	Code	IRC2018/TPI2014	Matrix-MP								
BCDL	10.0										Weight: 37 lb	FT = 20%

LUMBER
TOP CHORD 2x4 SP No.2
BOT CHORD 2x4 SP No.2
WEBS 2x4 SP No.3
WEDGE Left: 2x4 SP No.3

BRACING
TOP CHORD Structural wood sheathing directly applied or 6-0-0 oc purlins, except end verticals.
BOT CHORD Rigid ceiling directly applied or 10-0-0 oc bracing.

MiTek recommends that Stabilizers and required cross bracing be installed during truss erection, in accordance with Stabilizer Installation guide.

REACTIONS (lb/size) 2=375/0-4-9, (min. 0-1-8), 5=303/Mechanical, (min. 0-1-8)
Max Horiz 2=136 (LC 11)
Max Uplift 2=-57 (LC 12), 5=-64 (LC 12)
Max Grav 2=438 (LC 19), 5=389 (LC 19)

FORCES (lb) - Max. Comp./Max. Ten. - All forces 250 (lb) or less except when shown.
TOP CHORD 2-10=-489/33, 3-10=-401/44
BOT CHORD 2-6=-90/408, 6-12=-90/408, 5-12=-90/408
WEBS 3-5=-465/101

NOTES
1) Wind: ASCE 7-16; Vult=130mph (3-second gust) Vasd=103mph; TCDL=6.0psf; BCDL=6.0psf; h=25ft; Cat. II; Exp B; Enclosed; MWFRS (envelope) exterior zone; cantilever left and right exposed ; end vertical left and right exposed; Lumber DOL=1.60 plate grip DOL=1.60
2) TCLL: ASCE 7-16; Pr=20.0 psf (roof LL: Lum DOL=1.15 Plate DOL=1.15); Pf=20.0 psf (Lum DOL=1.15 Plate DOL=1.15); Is=1.0; Rough Cat B; Fully Exp.; Ce=0.9; Cs=1.00; Ct=1.10
3) Unbalanced snow loads have been considered for this design.
4) This truss has been designed for greater of min roof live load of 12.0 psf or 1.00 times flat roof load of 20.0 psf on overhangs non-concurrent with other live loads.
5) This truss has been designed for a 10.0 psf bottom chord live load nonconcurrent with any other live loads.
6) * This truss has been designed for a live load of 20.0psf on the bottom chord in all areas where a rectangle 3-06-00 tall by 2-00-00 wide will fit between the bottom chord and any other members.
7) Refer to girder(s) for truss to truss connections.
8) Provide mechanical connection (by others) of truss to bearing plate capable of withstanding 64 lb uplift at joint 5.
9) One H2.5A Simpson Strong-Tie connectors recommended to connect truss to bearing walls due to UPLIFT at jt(s) 2. This connection is for uplift only and does not consider lateral forces.
10) This truss is designed in accordance with the 2018 International Residential Code sections R502.11.1 and R802.10.2 and referenced standard ANSI/TPI 1.
11) "NAILED" indicates 3-10d (0.148"x3") or 2-12d (0.148"x3.25") toe-nails per NDS guidlines.
12) In the LOAD CASE(S) section, loads applied to the face of the truss are noted as front (F) or back (B).

LOAD CASE(S) Standard
1) Dead + Snow (balanced): Lumber Increase=1.15, Plate Increase=1.15
Uniform Loads (lb/ft)
Vert: 1-4=-60, 5-7=-20
Concentrated Loads (lb)
Vert: 11=-41 (F=-21, B=-21), 12=-31 (F=-16, B=-16)

Job	Truss	Truss Type	Qty	Ply	Lincoln A GRH-2nd Floor-Lincoln A GRH
24050001-B	CJ08	Diagonal Hip Girder	1	1	Job Reference (optional)

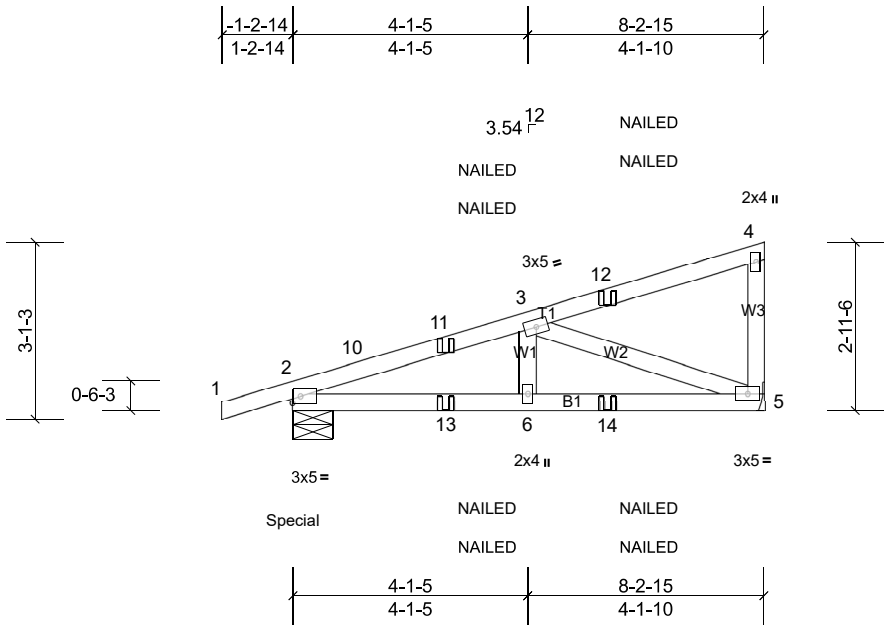

Scale = 1:40.3

Loading	(psf)	Spacing	2-0-0	CSI		DEFL	in	(loc)	l/defl	L/d	PLATES	GRIP
TCLL (roof)	20.0	Plate Grip DOL	1.15	TC	0.48	Vert(LL)	-0.03	5-6	>999	240	MT20	244/190
Snow (Pf)	20.0	Lumber DOL	1.15	BC	0.40	Vert(CT)	-0.04	5-6	>999	180		
TCDL	10.0	Rep Stress Incr	NO	WB	0.31	Horz(CT)	0.01	5	n/a	n/a		
BCLL	0.0*	Code	IRC2018/TPI2014	Matrix-MP								
BCDL	10.0										Weight: 38 lb	FT = 20%

LUMBER
TOP CHORD 2x4 SP No.2
BOT CHORD 2x4 SP No.2
WEBS 2x4 SP No.3

BRACING
TOP CHORD Structural wood sheathing directly applied or 6-0-0 oc purlins, except end verticals.
BOT CHORD Rigid ceiling directly applied or 10-0-0 oc bracing.

MiTek recommends that Stabilizers and required cross bracing be installed during truss erection, in accordance with Stabilizer Installation guide.

REACTIONS (lb/size) 2=464/0-8-6, (min. 0-1-8), 5=439/Mechanical, (min. 0-1-8)
Max Horiz 2=107 (LC 11)
Max Uplift 2=-98 (LC 8), 5=-67 (LC 12)
Max Grav 2=520 (LC 19), 5=495 (LC 19)

FORCES (lb) - Max. Comp./Max. Ten. - All forces 250 (lb) or less except when shown.
TOP CHORD 2-10=-863/77, 10-11=-823/81, 3-11=-785/89
BOT CHORD 2-13=-98/790, 6-13=-98/790, 6-14=-98/790, 5-14=-98/790
WEBS 3-5=-839/129

NOTES
1) Wind: ASCE 7-16; Vult=130mph (3-second gust) Vasd=103mph; TCDL=6.0psf; BCDL=6.0psf; h=25ft; Cat. II; Exp B; Enclosed; MWFRS (envelope) exterior zone; cantilever left and right exposed ; end vertical left and right exposed; Lumber DOL=1.60 plate grip DOL=1.60
2) TCLL: ASCE 7-16; Pr=20.0 psf (roof LL: Lum DOL=1.15 Plate DOL=1.15); Pf=20.0 psf (Lum DOL=1.15 Plate DOL=1.15); Is=1.0; Rough Cat B; Fully Exp.; Ce=0.9; Cs=1.00; Ct=1.10
3) Unbalanced snow loads have been considered for this design.
4) This truss has been designed for greater of min roof live load of 12.0 psf or 1.00 times flat roof load of 20.0 psf on overhangs non-concurrent with other live loads.
5) This truss has been designed for a 10.0 psf bottom chord live load nonconcurrent with any other live loads.
6) * This truss has been designed for a live load of 20.0psf on the bottom chord in all areas where a rectangle 3-06-00 tall by 2-00-00 wide will fit between the bottom chord and any other members.
7) Refer to girder(s) for truss to truss connections.
8) Provide mechanical connection (by others) of truss to bearing plate capable of withstanding 98 lb uplift at joint 2 and 67 lb uplift at joint 5.
9) This truss is designed in accordance with the 2018 International Residential Code sections R502.11.1 and R802.10.2 and referenced standard ANSI/TPI 1.
10) "NAILED" indicates 3-10d (0.148"x3") or 2-12d (0.148"x3.25") toe-nails per NDS guidlines.
11) In the LOAD CASE(S) section, loads applied to the face of the truss are noted as front (F) or back (B).

LOAD CASE(S) Standard
1) Dead + Snow (balanced): Lumber Increase=1.15, Plate Increase=1.15
Uniform Loads (lb/ft)
Vert: 1-4=-60, 5-7=-20
Concentrated Loads (lb)
Vert: 12=-125 (F=-63, B=-63), 13=-5 (F=-3, B=-3), 14=-50 (F=-25, B=-25)

Job	Truss	Truss Type	Qty	Ply	Lincoln A GRH-2nd Floor-Lincoln A GRH
24050001-B	J01	Jack-Open	2	1	Job Reference (optional)

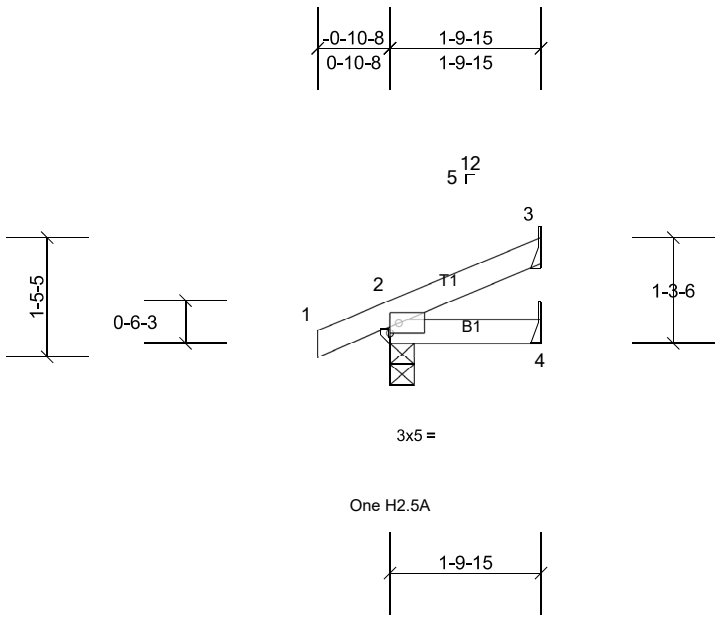

Scale = 1:27.9

Loading	(psf)	Spacing	2-0-0	CSI		DEFL	in	(loc)	l/defl	L/d	PLATES	GRIP
TCLL (roof)	20.0	Plate Grip DOL	1.15	TC	0.07	Vert(LL)	0.00	4-7	>999	240	MT20	244/190
Snow (Pf)	20.0	Lumber DOL	1.15	BC	0.03	Vert(CT)	0.00	4-7	>999	180		
TCDL	10.0	Rep Stress Incr	YES	WB	0.00	Horz(CT)	0.00	3	n/a	n/a		
BCLL	0.0*	Code	IRC2018/TPI2014	Matrix-MP								
BCDL	10.0										Weight: 7 lb	FT = 20%

LUMBER
TOP CHORD 2x4 SP No.2
BOT CHORD 2x4 SP No.2

BRACING
TOP CHORD Structural wood sheathing directly applied or 1-9-15 oc purlins.
BOT CHORD Rigid ceiling directly applied or 10-0-0 oc bracing.

MiTek recommends that Stabilizers and required cross bracing be installed during truss erection, in accordance with Stabilizer Installation guide.

REACTIONS (lb/size) 2=138/0-3-8, (min. 0-1-8), 3=42/Mechanical, (min. 0-1-8), 4=18/Mechanical, (min. 0-1-8)
Max Horiz 2=39 (LC 14)
Max Uplift 2=-24 (LC 10), 3=-22 (LC 14)
Max Grav 2=186 (LC 21), 3=58 (LC 21), 4=32 (LC 7)

FORCES (lb) - Max. Comp./Max. Ten. - All forces 250 (lb) or less except when shown.

NOTES
1) Wind: ASCE 7-16; Vult=130mph (3-second gust) Vasd=103mph; TCDL=6.0psf; BCDL=6.0psf; h=25ft; Cat. II; Exp B; Enclosed; MWFRS (envelope) exterior zone and C-C Exterior(2E) zone; cantilever left and right exposed ; end vertical left and right exposed;C-C for members and forces & MWFRS for reactions shown; Lumber DOL=1.60 plate grip DOL=1.60
2) TCLL: ASCE 7-16; Pr=20.0 psf (roof LL: Lum DOL=1.15 Plate DOL=1.15); Pf=20.0 psf (Lum DOL=1.15 Plate DOL=1.15); Is=1.0; Rough Cat B; Fully Exp.; Ce=0.9; Cs=1.00; Ct=1.10
3) Unbalanced snow loads have been considered for this design.
4) This truss has been designed for greater of min roof live load of 12.0 psf or 1.00 times flat roof load of 20.0 psf on overhangs non-concurrent with other live loads.
5) This truss has been designed for a 10.0 psf bottom chord live load nonconcurrent with any other live loads.
6) * This truss has been designed for a live load of 20.0psf on the bottom chord in all areas where a rectangle 3-06-00 tall by 2-00-00 wide will fit between the bottom chord and any other members.
7) Refer to girder(s) for truss to truss connections.
8) Provide mechanical connection (by others) of truss to bearing plate capable of withstanding 22 lb uplift at joint 3.
9) One H2.5A Simpson Strong-Tie connectors recommended to connect truss to bearing walls due to UPLIFT at jt(s) 2. This connection is for uplift only and does not consider lateral forces.
10) This truss is designed in accordance with the 2018 International Residential Code sections R502.11.1 and R802.10.2 and referenced standard ANSI/TPI 1.

LOAD CASE(S) Standard

Job	Truss	Truss Type	Qty	Ply	Lincoln A GRH-2nd Floor-Lincoln A GRH
24050001-B	J02	Jack-Open	12	1	Job Reference (optional)

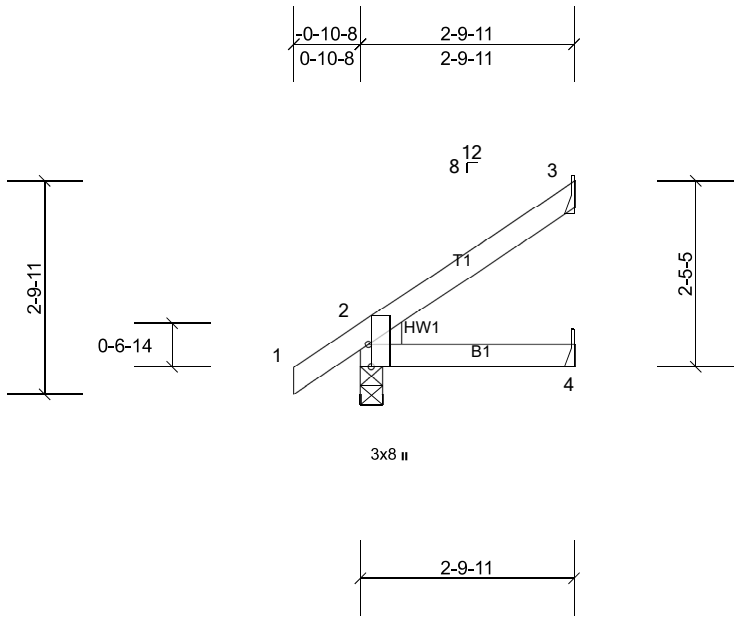

Scale = 1:30.3

Plate Offsets (X, Y): [2:0-3-8,Edge]

Loading	(psf)	Spacing	2-0-0	CSI		DEFL	in	(loc)	l/defl	L/d	PLATES	GRIP
TCLL (roof)	20.0	Plate Grip DOL	1.15	TC	0.13	Vert(LL)	0.00	4-7	>999	240	MT20	244/190
Snow (Pf)	20.0	Lumber DOL	1.15	BC	0.11	Vert(CT)	-0.01	4-7	>999	180		
TCDL	10.0	Rep Stress Incr	YES	WB	0.00	Horz(CT)	0.00	2	n/a	n/a		
BCLL	0.0*	Code	IRC2018/TPI2014	Matrix-MP								
BCDL	10.0										Weight: 12 lb	FT = 20%

LUMBER
TOP CHORD 2x4 SP No.2
BOT CHORD 2x4 SP No.2
WEDGE Left: 2x4 SP No.3

BRACING
TOP CHORD Structural wood sheathing directly applied or 2-9-11 oc purlins.
BOT CHORD Rigid ceiling directly applied or 10-0-0 oc bracing.

MiTek recommends that Stabilizers and required cross bracing be installed during truss erection, in accordance with Stabilizer Installation guide.

REACTIONS (lb/size) 2=171/0-3-8, (min. 0-1-8), 3=66/ Mechanical, (min. 0-1-8), 4=35/ Mechanical, (min. 0-1-8)
Max Horiz 2=85 (LC 14)
Max Uplift 2=-9 (LC 14), 3=-43 (LC 14)
Max Grav 2=255 (LC 21), 3=102 (LC 21), 4=50 (LC 7)

FORCES (lb) - Max. Comp./Max. Ten. - All forces 250 (lb) or less except when shown.

NOTES
1) Wind: ASCE 7-16; Vult=130mph (3-second gust) Vasd=103mph; TCDL=6.0psf; BCDL=6.0psf; h=25ft; Cat. II; Exp B; Enclosed; MWFRS (envelope) exterior zone and C-C Exterior(2E) zone; cantilever left and right exposed ; end vertical left and right exposed;C-C for members and forces & MWFRS for reactions shown; Lumber DOL=1.60 plate grip DOL=1.60
2) TCLL: ASCE 7-16; Pr=20.0 psf (roof LL: Lum DOL=1.15 Plate DOL=1.15); Pf=20.0 psf (Lum DOL=1.15 Plate DOL=1.15); Is=1.0; Rough Cat B; Fully Exp.; Ce=0.9; Cs=1.00; Ct=1.10
3) Unbalanced snow loads have been considered for this design.
4) This truss has been designed for greater of min roof live load of 12.0 psf or 1.00 times flat roof load of 20.0 psf on overhangs non-concurrent with other live loads.
5) This truss has been designed for a 10.0 psf bottom chord live load nonconcurrent with any other live loads.
6) * This truss has been designed for a live load of 20.0psf on the bottom chord in all areas where a rectangle 3-06-00 tall by 2-00-00 wide will fit between the bottom chord and any other members.
7) Refer to girder(s) for truss to truss connections.
8) Provide mechanical connection (by others) of truss to bearing plate capable of withstanding 43 lb uplift at joint 3.
9) One H2.5A Simpson Strong-Tie connectors recommended to connect truss to bearing walls due to UPLIFT at jt(s) 2. This connection is for uplift only and does not consider lateral forces.
10) This truss is designed in accordance with the 2018 International Residential Code sections R502.11.1 and R802.10.2 and referenced standard ANSI/TPI 1.

LOAD CASE(S) Standard

Job	Truss	Truss Type	Qty	Ply	Lincoln A GRH-2nd Floor-Lincoln A GRH
24050001-B	J03	Jack-Open	2	1	Job Reference (optional)

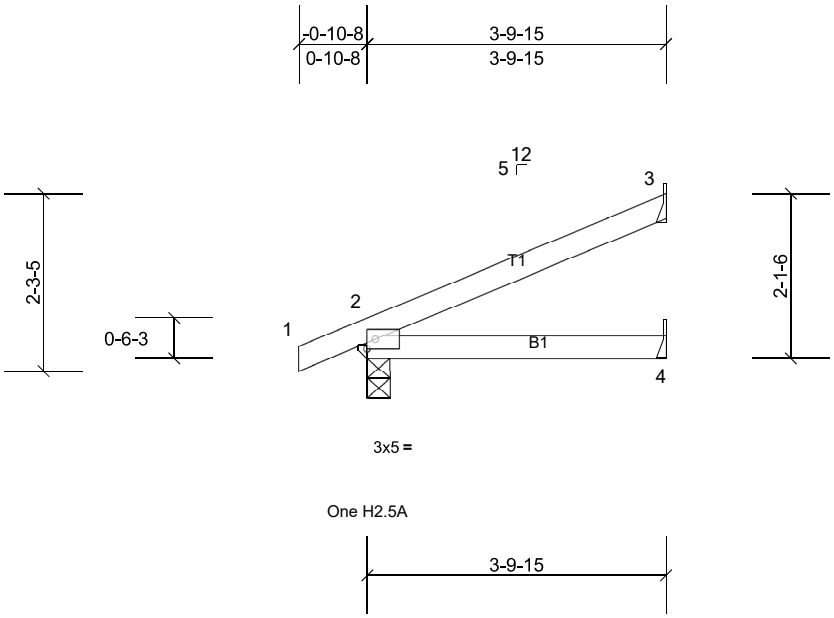

Scale = 1:29.5

Loading	(psf)	Spacing	2-0-0	CSI		DEFL	in	(loc)	l/defl	L/d	PLATES	GRIP
TCLL (roof)	20.0	Plate Grip DOL	1.15	TC	0.29	Vert(LL)	-0.01	4-7	>999	240	MT20	244/190
Snow (Pf)	20.0	Lumber DOL	1.15	BC	0.18	Vert(CT)	-0.02	4-7	>999	180		
TCDL	10.0	Rep Stress Incr	YES	WB	0.00	Horz(CT)	0.01	2	n/a	n/a		
BCLL	0.0*	Code	IRC2018/TPI2014	Matrix-MP								
BCDL	10.0										Weight: 13 lb	FT = 20%

LUMBER
TOP CHORD 2x4 SP No.2
BOT CHORD 2x4 SP No.2

BRACING
TOP CHORD Structural wood sheathing directly applied or 3-9-15 oc purlins.
BOT CHORD Rigid ceiling directly applied or 10-0-0 oc bracing.

MiTek recommends that Stabilizers and required cross bracing be installed during truss erection, in accordance with Stabilizer Installation guide.

REACTIONS (lb/size) 2=209/0-3-8, (min. 0-1-8), 3=98/Mechanical, (min. 0-1-8), 4=46/Mechanical, (min. 0-1-8)
Max Horiz 2=69 (LC 14)
Max Uplift 2=-27 (LC 14), 3=-47 (LC 14)
Max Grav 2=299 (LC 21), 3=147 (LC 21), 4=70 (LC 7)

FORCES (lb) - Max. Comp./Max. Ten. - All forces 250 (lb) or less except when shown.

NOTES
1) Wind: ASCE 7-16; Vult=130mph (3-second gust) Vasd=103mph; TCDL=6.0psf; BCDL=6.0psf; h=25ft; Cat. II; Exp B; Enclosed; MWFRS (envelope) exterior zone and C-C Exterior(2E) zone; cantilever left and right exposed ; end vertical left and right exposed;C-C for members and forces & MWFRS for reactions shown; Lumber DOL=1.60 plate grip DOL=1.60
2) TCLL: ASCE 7-16; Pr=20.0 psf (roof LL: Lum DOL=1.15 Plate DOL=1.15); Pf=20.0 psf (Lum DOL=1.15 Plate DOL=1.15); Is=1.0; Rough Cat B; Fully Exp.; Ce=0.9; Cs=1.00; Ct=1.10
3) Unbalanced snow loads have been considered for this design.
4) This truss has been designed for greater of min roof live load of 12.0 psf or 1.00 times flat roof load of 20.0 psf on overhangs non-concurrent with other live loads.
5) This truss has been designed for a 10.0 psf bottom chord live load nonconcurrent with any other live loads.
6) * This truss has been designed for a live load of 20.0psf on the bottom chord in all areas where a rectangle 3-06-00 tall by 2-00-00 wide will fit between the bottom chord and any other members.
7) Refer to girder(s) for truss to truss connections.
8) Provide mechanical connection (by others) of truss to bearing plate capable of withstanding 47 lb uplift at joint 3.
9) One H2.5A Simpson Strong-Tie connectors recommended to connect truss to bearing walls due to UPLIFT at jt(s) 2. This connection is for uplift only and does not consider lateral forces.
10) This truss is designed in accordance with the 2018 International Residential Code sections R502.11.1 and R802.10.2 and referenced standard ANSI/TPI 1.

LOAD CASE(S) Standard

Job	Truss	Truss Type	Qty	Ply	Lincoln A GRH-2nd Floor-Lincoln A GRH
24050001-B	J04	Jack-Closed Girder	2	2	Job Reference (optional)

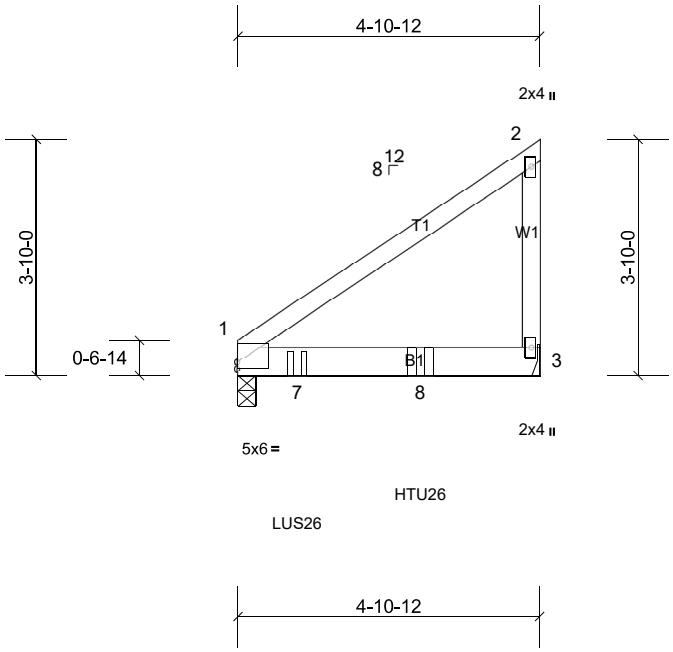

Scale = 1:37.4

Plate Offsets (X, Y): [1:Edge,0-1-5]

Loading	(psf)	Spacing	2-0-0	CSI		DEFL	in	(loc)	l/defl	L/d	PLATES	GRIP
TCLL (roof)	20.0	Plate Grip DOL	1.15	TC	0.47	Vert(LL)	-0.06	3-6	>930	240	MT20	244/190
Snow (Pf)	20.0	Lumber DOL	1.15	BC	0.98	Vert(CT)	-0.11	3-6	>535	180		
TCDL	10.0	Rep Stress Incr	NO	WB	0.00	Horz(CT)	0.01	1	n/a	n/a		
BCLL	0.0*	Code	IRC2018/TPI2014	Matrix-MP								
BCDL	10.0										Weight: 50 lb	FT = 20%

LUMBER
TOP CHORD 2x4 SP No.2
BOT CHORD 2x6 SP No.2
WEBS 2x4 SP No.3

BRACING
TOP CHORD Structural wood sheathing directly applied or 4-10-12 oc purlins, except end verticals.
BOT CHORD Rigid ceiling directly applied or 10-0-0 oc bracing.

REACTIONS (lb/size) 1=1416/0-3-8, (min. 0-1-8), 3=1075/ Mechanical, (min. 0-1-8)
Max Horiz 1=118 (LC 11)
Max Uplift 1=-134 (LC 12), 3=-139 (LC 12)
Max Grav 1=1511 (LC 18), 3=1171 (LC 18)

FORCES (lb) - Max. Comp./Max. Ten. - All forces 250 (lb) or less except when shown.
TOP CHORD 1-2=-427/114, 2-3=-250/60

NOTES
1) 2-ply truss to be connected together as follows:
Top chords connected with 10d (0.131"x3") nails as follows: 2x4 - 1 row at 0-9-0 oc.
Bottom chords connected with 10d (0.131"x3") nails as follows: 2x6 - 2 rows staggered at 0-7-0 oc.
2) All loads are considered equally applied to all plies, except if noted as front (F) or back (B) face in the LOAD CASE(S) section. Ply to ply connections have been provided to distribute only loads noted as (F) or (B), unless otherwise indicated.
3) Wind: ASCE 7-16; Vult=130mph (3-second gust) Vasd=103mph; TCDL=6.0psf; BCDL=6.0psf; h=25ft; Cat. II; Exp B; Enclosed; MWFRS (envelope) exterior zone; cantilever left and right exposed ; end vertical left and right exposed; Lumber DOL=1.60 plate grip DOL=1.60
4) TCLL: ASCE 7-16; Pr=20.0 psf (roof LL: Lum DOL=1.15 Plate DOL=1.15); Pf=20.0 psf (Lum DOL=1.15 Plate DOL=1.15); Is=1.0; Rough Cat B; Fully Exp.; Ce=0.9; Cs=1.00; Ct=1.10
5) Unbalanced snow loads have been considered for this design.
6) This truss has been designed for a 10.0 psf bottom chord live load nonconcurrent with any other live loads.
7) * This truss has been designed for a live load of 20.0psf on the bottom chord in all areas where a rectangle 3-06-00 tall by 2-00-00 wide will fit between the bottom chord and any other members.
8) Refer to girder(s) for truss to truss connections.
9) Provide mechanical connection (by others) of truss to bearing plate capable of withstanding 139 lb uplift at joint 3.
10) One H2.5A Simpson Strong-Tie connectors recommended to connect truss to bearing walls due to UPLIFT at jt(s) 1. This connection is for uplift only and does not consider lateral forces.
11) This truss is designed in accordance with the 2018 International Residential Code sections R502.11.1 and R802.10.2 and referenced standard ANSI/TPI 1.
12) Use Simpson Strong-Tie LUS26 (4-10d Girder, 4-10d Truss) or equivalent at 0-11-8 from the left end to connect truss(es) T12 (1 ply 2x4 SP) to front face of bottom chord.
13) Use Simpson Strong-Tie HTU26 (20-10d Girder, 11-10dx1 1/2 Truss, Single Ply Girder) or equivalent at 2-11-8 from the left end to connect truss(es) T13 (1 ply 2x4 SP) to front face of bottom chord.
14) Fill all nail holes where hanger is in contact with lumber.

LOAD CASE(S) Standard
1) Dead + Snow (balanced): Lumber Increase=1.15, Plate Increase=1.15
Uniform Loads (lb/ft)
Vert: 1-2=-60, 3-4=-20
Concentrated Loads (lb)
Vert: 7=-1020 (F), 8=-1091 (F)

Job	Truss	Truss Type	Qty	Ply	Lincoln A GRH-2nd Floor-Lincoln A GRH
24050001-B	J04A	Jack-Open	26	1	Job Reference (optional)

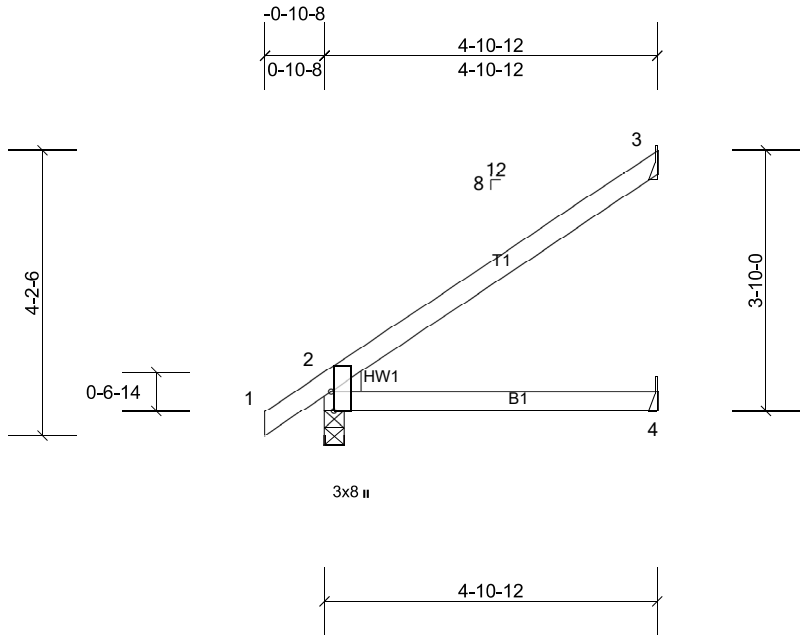

Scale = 1:33.9

Plate Offsets (X, Y): [2:0-3-8,Edge]

Loading	(psf)	Spacing	2-0-0	CSI		DEFL	in	(loc)	l/defl	L/d	PLATES	GRIP
TCLL (roof)	20.0	Plate Grip DOL	1.15	TC	0.55	Vert(LL)	-0.05	4-7	>999	240	MT20	244/190
Snow (Pf)	20.0	Lumber DOL	1.15	BC	0.44	Vert(CT)	-0.09	4-7	>679	180		
TCDL	10.0	Rep Stress Incr	YES	WB	0.00	Horz(CT)	0.02	2	n/a	n/a		
BCLL	0.0*	Code	IRC2018/TPI2014	Matrix-MP								
BCDL	10.0										Weight: 19 lb	FT = 20%

LUMBER
TOP CHORD 2x4 SP No.2
BOT CHORD 2x4 SP No.2
WEDGE Left: 2x4 SP No.3

BRACING
TOP CHORD Structural wood sheathing directly applied or 4-10-12 oc purlins.
BOT CHORD Rigid ceiling directly applied or 10-0-0 oc bracing.

MiTek recommends that Stabilizers and required cross bracing be installed during truss erection, in accordance with Stabilizer Installation guide.

REACTIONS (lb/size) 2=251/0-3-8, (min. 0-1-8), 3=124/Mechanical, (min. 0-1-8), 4=64/Mechanical, (min. 0-1-8)
Max Horiz 2=137 (LC 14)
Max Uplift 2=-4 (LC 14), 3=-79 (LC 14)
Max Grav 2=350 (LC 21), 3=206 (LC 21), 4=90 (LC 7)

FORCES (lb) - Max. Comp./Max. Ten. - All forces 250 (lb) or less except when shown.

NOTES
1) Wind: ASCE 7-16; Vult=130mph (3-second gust) Vasd=103mph; TCDL=6.0psf; BCDL=6.0psf; h=25ft; Cat. II; Exp B; Enclosed; MWFRS (envelope) exterior zone and C-C Exterior(2E) zone; cantilever left and right exposed ; end vertical left and right exposed;C-C for members and forces & MWFRS for reactions shown; Lumber DOL=1.60 plate grip DOL=1.60
2) TCLL: ASCE 7-16; Pr=20.0 psf (roof LL: Lum DOL=1.15 Plate DOL=1.15); Pf=20.0 psf (Lum DOL=1.15 Plate DOL=1.15); Is=1.0; Rough Cat B; Fully Exp.; Ce=0.9; Cs=1.00; Ct=1.10
3) Unbalanced snow loads have been considered for this design.
4) This truss has been designed for greater of min roof live load of 12.0 psf or 1.00 times flat roof load of 20.0 psf on overhangs non-concurrent with other live loads.
5) This truss has been designed for a 10.0 psf bottom chord live load nonconcurrent with any other live loads.
6) * This truss has been designed for a live load of 20.0psf on the bottom chord in all areas where a rectangle 3-06-00 tall by 2-00-00 wide will fit between the bottom chord and any other members.
7) Refer to girder(s) for truss to truss connections.
8) Provide mechanical connection (by others) of truss to bearing plate capable of withstanding 79 lb uplift at joint 3.
9) One H2.5A Simpson Strong-Tie connectors recommended to connect truss to bearing walls due to UPLIFT at jt(s) 2. This connection is for uplift only and does not consider lateral forces.
10) This truss is designed in accordance with the 2018 International Residential Code sections R502.11.1 and R802.10.2 and referenced standard ANSI/TPI 1.

LOAD CASE(S) Standard

Job	Truss	Truss Type	Qty	Ply	Lincoln A GRH-2nd Floor-Lincoln A GRH
24050001-B	PB04	Piggyback	1	1	Job Reference (optional)

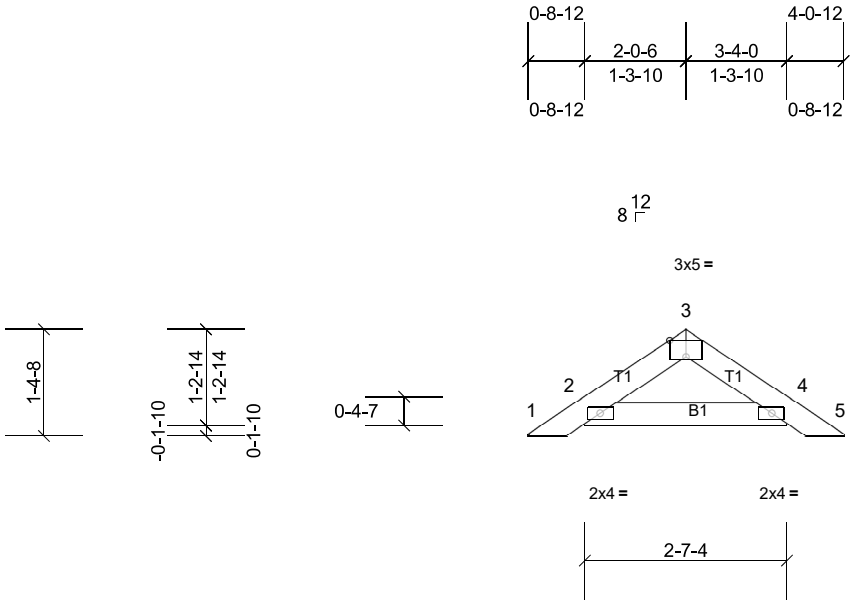

Scale = 1:29.7

Plate Offsets (X, Y): [3:0-2-8,Edge]

Loading	(psf)	Spacing	2-0-0	CSI		DEFL	in	(loc)	l/defl	L/d	PLATES	GRIP
TCLL (roof)	20.0	Plate Grip DOL	1.15	TC	0.03	Vert(LL)	n/a	-	n/a	999	MT20	244/190
Snow (Pf)	20.0	Lumber DOL	1.15	BC	0.04	Vert(CT)	n/a	-	n/a	999		
TCDL	10.0	Rep Stress Incr	YES	WB	0.00	Horz(CT)	0.00	10	n/a	n/a		
BCLL	0.0*	Code	IRC2018/TPI2014	Matrix-MP								
BCDL	10.0										Weight: 11 lb	FT = 20%

LUMBER
TOP CHORD 2x4 SP No.2
BOT CHORD 2x4 SP No.2

BRACING
TOP CHORD Structural wood sheathing directly applied or 4-1-8 oc purlins.
BOT CHORD Rigid ceiling directly applied or 10-0-0 oc bracing.

MiTek recommends that Stabilizers and required cross bracing be installed during truss erection, in accordance with Stabilizer Installation guide.

REACTIONS All bearings 2-7-4.
(lb) - Max Horiz 2=28 (LC 13), 6=28 (LC 13)
Max Uplift All uplift 100 (lb) or less at joint(s) 2, 4, 6, 10
Max Grav All reactions 250 (lb) or less at joint (s) 2, 4, 6, 10

FORCES (lb) - Max. Comp./Max. Ten. - All forces 250 (lb) or less except when shown.

NOTES
1) Unbalanced roof live loads have been considered for this design.
2) Wind: ASCE 7-16; Vult=130mph (3-second gust) Vasd=103mph; TCDL=6.0psf; BCDL=6.0psf; h=25ft; Cat. II; Exp B; Enclosed; MWFRS (envelope) exterior zone and C-C Exterior(2E) zone; cantilever left and right exposed ; end vertical left and right exposed;C-C for members and forces & MWFRS for reactions shown; Lumber DOL=1.60 plate grip DOL=1.60
3) Truss designed for wind loads in the plane of the truss only. For studs exposed to wind (normal to the face), see Standard Industry Gable End Details as applicable, or consult qualified building designer as per ANSI/TPI 1.
4) TCLL: ASCE 7-16; Pr=20.0 psf (roof LL: Lum DOL=1.15 Plate DOL=1.15); Pf=20.0 psf (Lum DOL=1.15 Plate DOL=1.15); Is=1.0; Rough Cat B; Fully Exp.; Ce=0.9; Cs=1.00; Ct=1.10
5) Unbalanced snow loads have been considered for this design.
6) This truss has been designed for greater of min roof live load of 12.0 psf or 1.00 times flat roof load of 20.0 psf on overhangs non-concurrent with other live loads.
7) Gable requires continuous bottom chord bearing.
8) Gable studs spaced at 4-0-0 oc.
9) This truss has been designed for a 10.0 psf bottom chord live load nonconcurrent with any other live loads.
10) * This truss has been designed for a live load of 20.0psf on the bottom chord in all areas where a rectangle 3-06-00 tall by 2-00-00 wide will fit between the bottom chord and any other members.
11) One H2.5A Simpson Strong-Tie connectors recommended to connect truss to bearing walls due to UPLIFT at jt(s) 2 and 4. This connection is for uplift only and does not consider lateral forces.
12) This truss is designed in accordance with the 2018 International Residential Code sections R502.11.1 and R802.10.2 and referenced standard ANSI/TPI 1.
13) See Standard Industry Piggyback Truss Connection Detail for Connection to base truss as applicable, or consult qualified building designer.

LOAD CASE(S) Standard

Job	Truss	Truss Type	Qty	Ply	Lincoln A GRH-2nd Floor-Lincoln A GRH
24050001-B	T01	Piggyback Base	1	1	Job Reference (optional)

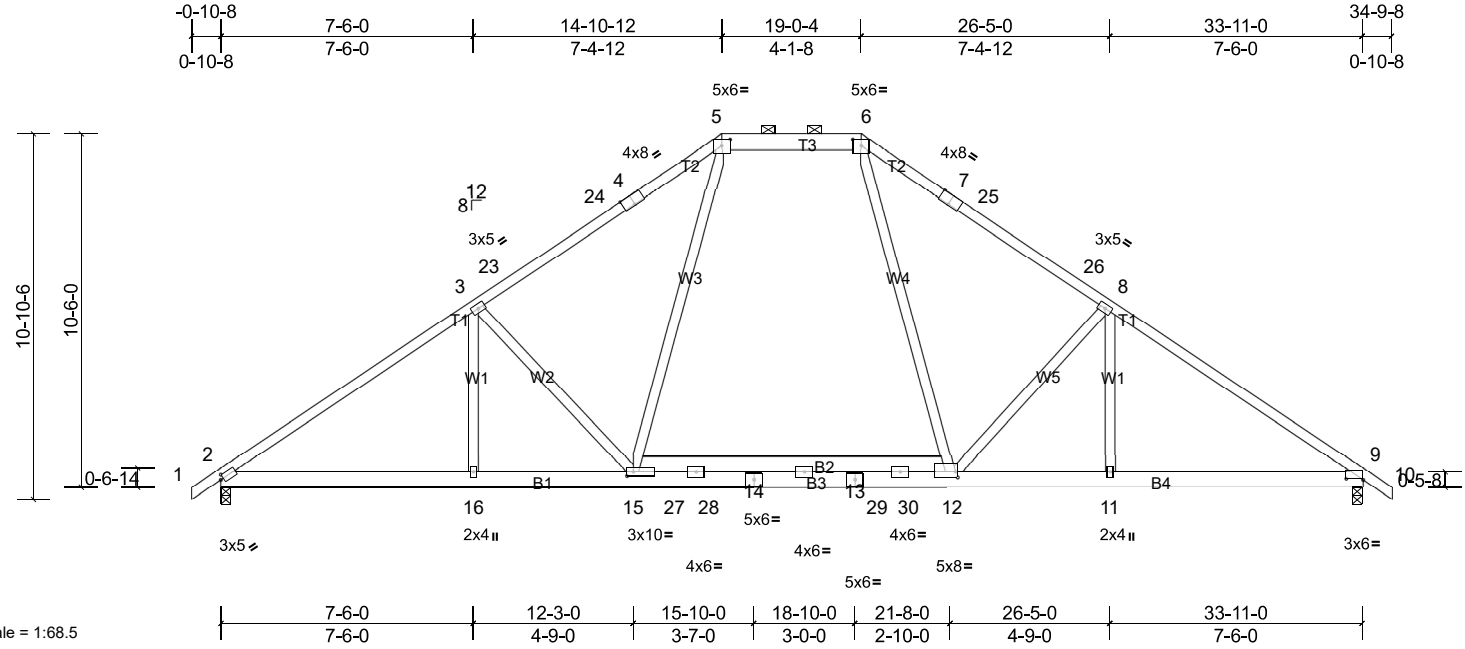

Scale = 1:68.5

Plate Offsets (X, Y): [2:0-1-0,0-1-8], [4:0-4-0,Edge], [5:0-3-0,0-2-3], [6:0-3-0,0-2-3], [7:0-4-0,Edge], [9:0-6-0,0-0-7], [12:0-0-12,0-2-0], [15:0-2-4,0-1-8]

Loading	(psf)	Spacing	2-0-0	CSI		DEFL	in	(loc)	l/defl	L/d	PLATES	GRIP
TCLL (roof)	20.0	Plate Grip DOL	1.15	TC	0.56	Vert(LL)	-0.21	15-16	>999	240	MT20	244/190
Snow (Pf)	20.0	Lumber DOL	1.15	BC	0.46	Vert(CT)	-0.27	15-16	>999	180		
TCDL	10.0	Rep Stress Incr	YES	WB	0.66	Horz(CT)	0.05	9	n/a	n/a		
BCLL	0.0*	Code	IRC2018/TPI2014	Matrix-MSH								
BCDL	10.0										Weight: 231 lb	FT = 20%

LUMBER

TOP CHORD 2x4 SP 2400F 2.0E *Except* T3:2x6 SP No.2
BOT CHORD 2x6 SP 2400F 2.0E *Except* B3,B2:2x6 SP No.2
WEBS 2x4 SP No.3 *Except* W3,W4:2x4 SP No.2

BRACING

TOP CHORD Structural wood sheathing directly applied or 4-5-13 oc purlins, except 2-0-0 oc purlins (5-3-11 max.): 5-6.
BOT CHORD Rigid ceiling directly applied or 10-0-0 oc bracing.

MiTek recommends that Stabilizers and required cross bracing be installed during truss erection, in accordance with Stabilizer Installation guide.

REACTIONS (lb/size) 2=1509/0-3-8, (min. 0-1-8), 9=1509/0-3-8, (min. 0-1-8)
Max Horiz 2=247 (LC 13)
Max Uplift 2=-24 (LC 14), 9=-24 (LC 15)
Max Grav 2=1804 (LC 51), 9=1804 (LC 53)

FORCES (lb) - Max. Comp./Max. Ten. - All forces 250 (lb) or less except when shown.
TOP CHORD 2-3=-2993/51, 3-23=-2624/43, 23-24=-2459/65, 4-24=-2458/66, 4-5=-2429/87, 5-6=-1825/149, 6-7=-2438/87, 7-25=-2467/66, 25-26=-2467/64, 8-26=-2633/42, 8-9=-2993/50
BOT CHORD 2-16=-109/2390, 15-16=-57/2390, 15-27=0/1662, 27-28=0/1665, 14-28=0/1676, 13-14=0/1683, 13-29=0/1670, 29-30=0/1659, 12-30=0/1656, 11-12=0/2390, 9-11=0/2390
WEBS 3-16=-106/252, 5-15=0/1003, 6-12=0/1010, 3-15=-709/339, 8-12=-707/345

NOTES

1) Unbalanced roof live loads have been considered for this design.
2) Wind: ASCE 7-16; Vult=130mph (3-second gust) Vasd=103mph; TCDL=6.0psf; BCDL=6.0psf; h=25ft; Cat. II; Exp B; Enclosed; MWFRS (envelope) exterior zone and C-C Exterior(2E) -0-10-8 to 2-6-3, Interior (1) 2-6-3 to 11-6-1, Exterior(2R) 11-6-1 to 22-4-15, Interior (1) 22-4-15 to 31-4-13, Exterior(2E) 31-4-13 to 34-9-8 zone; cantilever left and right exposed ; end vertical left and right exposed;C-C for members and forces & MWFRS for reactions shown; Lumber DOL=1.60 plate grip DOL=1.60
3) TCLL: ASCE 7-16; Pr=20.0 psf (roof LL: Lum DOL=1.15 Plate DOL=1.15); Pf=20.0 psf (Lum DOL=1.15 Plate DOL=1.15); Is=1.0; Rough Cat B; Fully Exp.; Ce=0.9; Cs=1.00; Ct=1.10
4) Unbalanced snow loads have been considered for this design.
5) This truss has been designed for greater of min roof live load of 12.0 psf or 1.00 times flat roof load of 20.0 psf on overhangs non-concurrent with other live loads.
6) 200.0lb AC unit load placed on the bottom chord, 17-0-0 from left end, supported at two points, 5-0-0 apart.
7) Provide adequate drainage to prevent water ponding.
8) This truss has been designed for a 10.0 psf bottom chord live load nonconcurrent with any other live loads.
9) * This truss has been designed for a live load of 20.0psf on the bottom chord in all areas where a rectangle 3-06-00 tall by 2-00-00 wide will fit between the bottom chord and any other members, with BCDL = 10.0psf.
10) One H2.5A Simpson Strong-Tie connectors recommended to connect truss to bearing walls due to UPLIFT at jt(s) 9 and 2. This connection is for uplift only and does not consider lateral forces.
11) This truss is designed in accordance with the 2018 International Residential Code sections R502.11.1 and R802.10.2 and referenced standard ANSI/TPI 1.
12) Graphical purlin representation does not depict the size or the orientation of the purlin along the top and/or bottom chord.

LOAD CASE(S) Standard

Job	Truss	Truss Type	Qty	Ply	Lincoln A GRH-2nd Floor-Lincoln A GRH
24050001-B	T02	Hip	2	1	Job Reference (optional)

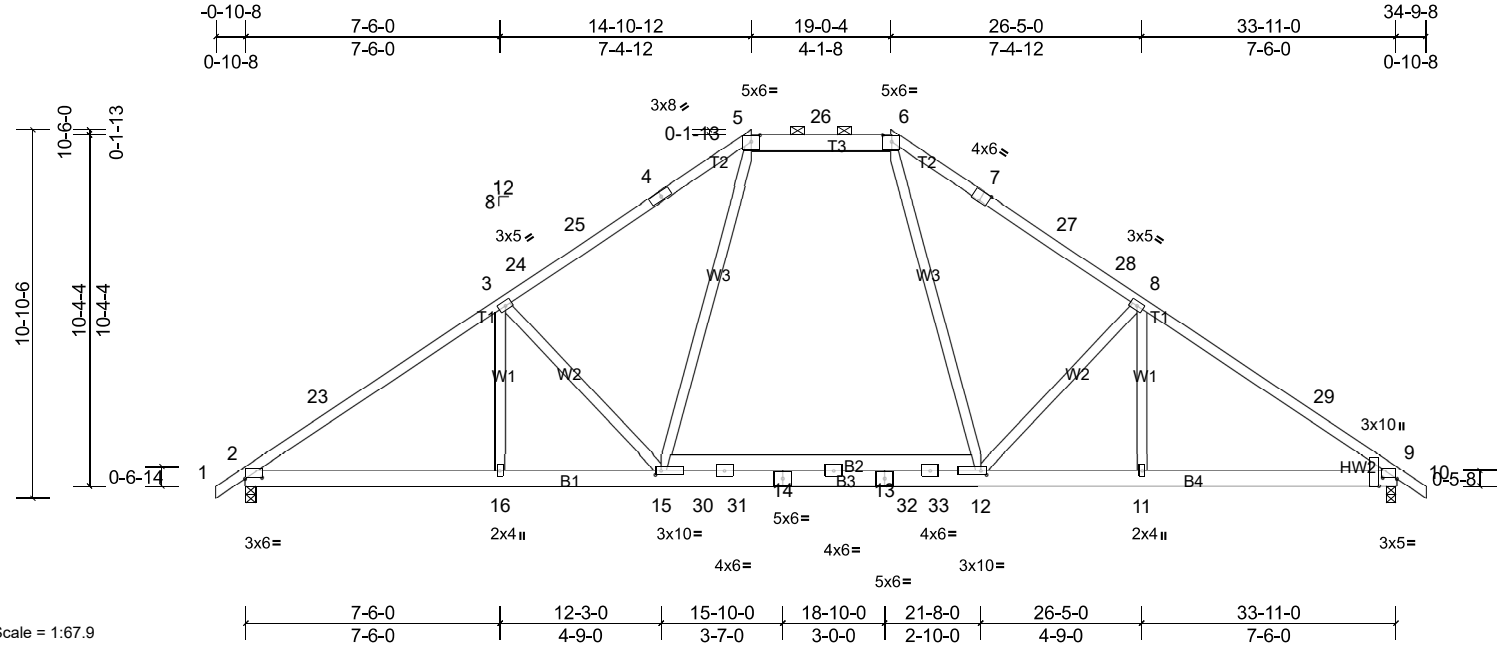

Scale = 1:67.9

Plate Offsets (X, Y): [2:0-6-0,0-0-7], [5:0-3-0,0-2-3], [6:0-3-0,0-2-3], [7:0-3-0,Edge], [9:0-5-0,0-0-7], [9:0-2-10,Edge], [12:0-2-0,0-1-8], [15:0-2-0,0-1-8]

Loading	(psf)	Spacing	2-0-0	CSI		DEFL	in	(loc)	l/defl	L/d	PLATES	GRIP
TCLL (roof)	20.0	Plate Grip DOL	1.15	TC	0.95	Vert(LL)	-0.22	11-12	>999	240	MT20	244/190
Snow (Pf)	20.0	Lumber DOL	1.15	BC	0.47	Vert(CT)	-0.28	11-12	>999	180		
TCDL	10.0	Rep Stress Incr	YES	WB	0.66	Horz(CT)	0.05	9	n/a	n/a		
BCLL	0.0*	Code	IRC2018/TPI2014	Matrix-MSH								
BCDL	10.0										Weight: 232 lb	FT = 20%

LUMBER

TOP CHORD 2x4 SP No.1 *Except* T3:2x6 SP No.2
BOT CHORD 2x6 SP 2400F 2.0E *Except* B3,B2:2x6 SP No.2
WEBS 2x4 SP No.3 *Except* W3:2x4 SP No.2
WEDGE Right: 2x4 SP No.3

BRACING

TOP CHORD Structural wood sheathing directly applied, except
2-0-0 oc purlins (5-5-11 max.): 5-6.
BOT CHORD Rigid ceiling directly applied or 10-0-0 oc bracing.

MiTek recommends that Stabilizers and required cross bracing be installed during truss erection, in accordance with Stabilizer Installation guide.

REACTIONS (lb/size) 2=1509/0-3-8, (min. 0-1-8), 9=1509/0-3-8, (min. 0-1-8)
Max Horiz 2=-245 (LC 12)
Max Uplift 2=-42 (LC 14), 9=-41 (LC 15)
Max Grav 2=1804 (LC 51), 9=1805 (LC 53)

FORCES (lb) - Max. Comp./Max. Ten. - All forces 250 (lb) or less except when shown.

TOP CHORD 2-23=-2879/20, 3-23=-2700/53, 3-24=-2522/10, 24-25=-2414/11, 4-25=-2366/29, 4-5=-2328/54, 5-26=-1750/110, 6-26=-1750/110, 6-7=-2327/55, 7-27=-2365/29, 27-28=-2414/23, 8-28=-2521/10, 8-29=-2704/56, 9-29=-2872/23
BOT CHORD 2-16=-109/2300, 15-16=-82/2300, 15-30=0/1629, 30-31=0/1632, 14-31=0/1642, 13-14=0/1649, 13-32=0/1636, 32-33=0/1626, 12-33=0/1622, 11-12=0/2302, 9-11=0/2302
WEBS 3-16=-116/260, 3-15=-691/345, 5-15=0/954, 6-12=0/953, 8-12=-698/349, 8-11=-109/267

NOTES

1) Unbalanced roof live loads have been considered for this design.
2) Wind: ASCE 7-16; Vult=130mph (3-second gust) Vasd=103mph; TCDL=6.0psf; BCDL=6.0psf; h=25ft; Cat. II; Exp B; Enclosed; MWFRS (envelope) exterior zone and C-C Exterior(2E) -0-10-8 to 2-6-3, Interior (1) 2-6-3 to 10-1-3, Exterior(2R) 10-1-3 to 23-9-13, Interior (1) 23-9-13 to 31-4-13, Exterior(2E) 31-4-13 to 34-9-8 zone; cantilever left and right exposed ; end vertical left and right exposed;C-C for members and forces & MWFRS for reactions shown; Lumber DOL=1.60 plate grip DOL=1.60
3) TCLL: ASCE 7-16; Pr=20.0 psf (roof LL: Lum DOL=1.15 Plate DOL=1.15); Pf=20.0 psf (Lum DOL=1.15 Plate DOL=1.15); Is=1.0; Rough Cat B; Fully Exp.; Ce=0.9; Cs=1.00; Ct=1.10
4) Unbalanced snow loads have been considered for this design.
5) This truss has been designed for greater of min roof live load of 12.0 psf or 1.00 times flat roof load of 20.0 psf on overhangs non-concurrent with other live loads.
6) 200.0lb AC unit load placed on the bottom chord, 17-0-0 from left end, supported at two points, 5-0-0 apart.
7) Provide adequate drainage to prevent water ponding.
8) This truss has been designed for a 10.0 psf bottom chord live load nonconcurrent with any other live loads.
9) * This truss has been designed for a live load of 20.0psf on the bottom chord in all areas where a rectangle 3-06-00 tall by 2-00-00 wide will fit between the bottom chord and any other members, with BCDL = 10.0psf.
10) One H2.5A Simpson Strong-Tie connectors recommended to connect truss to bearing walls due to UPLIFT at jt(s) 9 and 2. This connection is for uplift only and does not consider lateral forces.
11) This truss is designed in accordance with the 2018 International Residential Code sections R502.11.1 and R802.10.2 and referenced standard ANSI/TPI 1.
12) Graphical purlin representation does not depict the size or the orientation of the purlin along the top and/or bottom chord.

LOAD CASE(S) Standard

Job	Truss	Truss Type	Qty	Ply	Lincoln A GRH-2nd Floor-Lincoln A GRH
24050001-B	T03	Hip	2	1	Job Reference (optional)

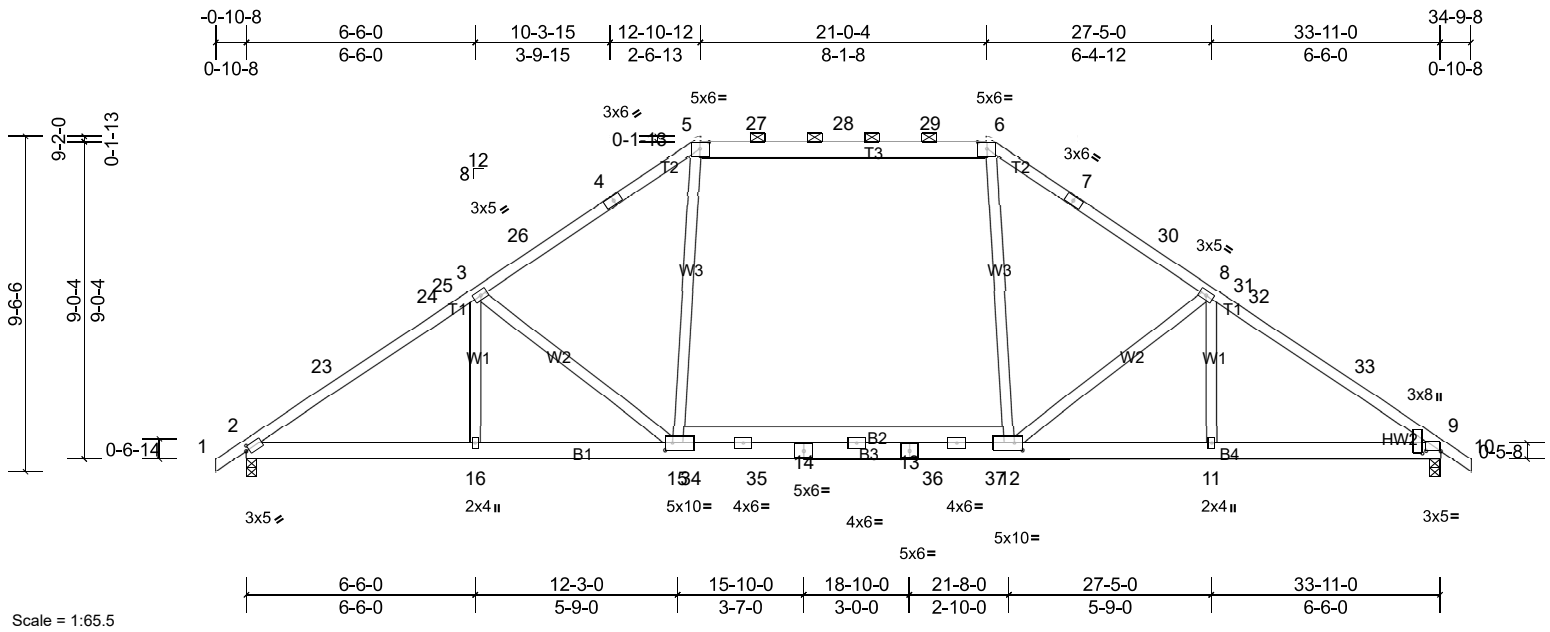

Scale = 1:65.5

Plate Offsets (X, Y): [2:0-1-0,0-1-8], [5:0-3-0,0-2-3], [6:0-3-0,0-2-3], [9:0-5-0,0-0-3], [9:0-0-10,0-6-4], [12:0-2-12,0-2-8], [15:0-2-8,0-2-8]

Loading	(psf)	Spacing	2-0-0	CSI		DEFL	in	(loc)	l/defl	L/d	PLATES	GRIP
TCLL (roof)	20.0	Plate Grip DOL	1.15	TC	0.90	Vert(LL)	-0.24	15-16	>999	240	MT20	244/190
Snow (Pf)	20.0	Lumber DOL	1.15	BC	0.47	Vert(CT)	-0.30	11-12	>999	180		
TCDL	10.0	Rep Stress Incr	YES	WB	0.63	Horz(CT)	0.05	9	n/a	n/a		
BCLL	0.0*	Code	IRC2018/TPI2014	Matrix-MSH								
BCDL	10.0										Weight: 228 lb	FT = 20%

LUMBER

TOP CHORD 2x4 SP No.2 *Except* T3:2x6 SP No.2
BOT CHORD 2x6 SP 2400F 2.0E *Except* B3,B2:2x6 SP No.2
WEBS 2x4 SP No.3
WEDGE Right: 2x4 SP No.3

BRACING

TOP CHORD Structural wood sheathing directly applied or 2-2-0 oc purlins, except 2-0-0 oc purlins (2-2-0 max.): 5-6.
BOT CHORD Rigid ceiling directly applied or 10-0-0 oc bracing.

MiTek recommends that Stabilizers and required cross bracing be installed during truss erection, in accordance with Stabilizer Installation guide.

REACTIONS (lb/size) 2=1509/0-3-8, (min. 0-1-8), 9=1509/0-3-8, (min. 0-1-8)
Max Horiz 2=-214 (LC 12)
Max Uplift 2=-48 (LC 14), 9=-47 (LC 15)
Max Grav 2=1746 (LC 47), 9=1746 (LC 47)

FORCES (lb) - Max. Comp./Max. Ten. - All forces 250 (lb) or less except when shown.

TOP CHORD 2-23=-2852/41, 23-24=-2773/46, 24-25=-2694/64, 3-25=-2669/68, 3-26=-2444/10, 4-26=-2313/28, 4-5=-2283/48, 5-27=-1882/101, 27-28=-1882/101, 28-29=-1882/101, 6-29=-1882/101, 6-7=-2282/48, 7-30=-2313/28, 8-30=-2443/9, 8-31=-2675/71, 31-32=-2698/67, 32-33=-2777/49, 9-33=-2846/44
BOT CHORD 2-16=-94/2289, 15-16=-86/2289, 15-34=0/1772, 34-35=0/1778, 14-35=0/1789, 13-14=0/1796, 13-36=0/1783, 36-37=0/1772, 12-37=0/1764, 11-12=0/2291, 9-11=0/2291
WEBS 3-15=-628/297, 5-15=0/849, 6-12=0/848, 8-12=-633/298

NOTES

1) Unbalanced roof live loads have been considered for this design.
2) Wind: ASCE 7-16; Vult=130mph (3-second gust) Vasd=103mph; TCDL=6.0psf; BCDL=6.0psf; h=25ft; Cat. II; Exp B; Enclosed; MWFRS (envelope) exterior zone and C-C Exterior(2E) -0-10-8 to 2-6-3, Interior (1) 2-6-3 to 8-1-3, Exterior(2R) 8-1-3 to 25-9-13, Interior (1) 25-9-13 to 31-4-13, Exterior(2E) 31-4-13 to 34-9-8 zone; cantilever left and right exposed ; end vertical left and right exposed;C-C for members and forces & MWFRS for reactions shown; Lumber DOL=1.60 plate grip DOL=1.60
3) TCLL: ASCE 7-16; Pr=20.0 psf (roof LL: Lum DOL=1.15 Plate DOL=1.15); Pf=20.0 psf (Lum DOL=1.15 Plate DOL=1.15); Is=1.0; Rough Cat B; Fully Exp.; Ce=0.9; Cs=1.00; Ct=1.10
4) Unbalanced snow loads have been considered for this design.
5) This truss has been designed for greater of min roof live load of 12.0 psf or 1.00 times flat roof load of 20.0 psf on overhangs non-concurrent with other live loads.
6) 200.0lb AC unit load placed on the bottom chord, 17-0-0 from left end, supported at two points, 5-0-0 apart.
7) Provide adequate drainage to prevent water ponding.
8) This truss has been designed for a 10.0 psf bottom chord live load nonconcurrent with any other live loads.
9) * This truss has been designed for a live load of 20.0psf on the bottom chord in all areas where a rectangle 3-06-00 tall by 2-00-00 wide will fit between the bottom chord and any other members, with BCDL = 10.0psf.
10) One H2.5A Simpson Strong-Tie connectors recommended to connect truss to bearing walls due to UPLIFT at jt(s) 9 and 2. This connection is for uplift only and does not consider lateral forces.
11) This truss is designed in accordance with the 2018 International Residential Code sections R502.11.1 and R802.10.2 and referenced standard ANSI/TPI 1.
12) Graphical purlin representation does not depict the size or the orientation of the purlin along the top and/or bottom chord.

LOAD CASE(S) Standard

Job	Truss	Truss Type	Qty	Ply	Lincoln A GRH-2nd Floor-Lincoln A GRH
24050001-B	T04	Hip	2	1	Job Reference (optional)

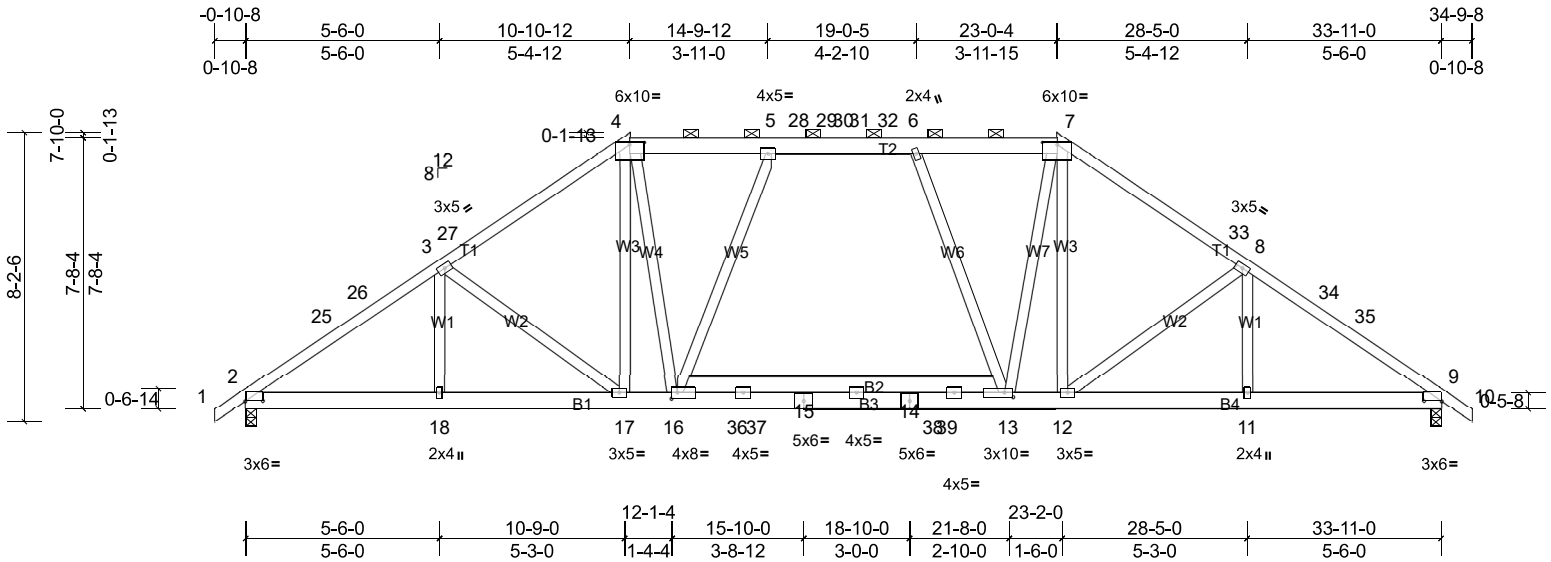

Scale = 1:65.4

Plate Offsets (X, Y): [2:0-6-0,0-0-3], [4:0-5-0,0-0-14], [7:0-5-0,0-0-14], [9:0-6-0,0-0-3], [13:0-3-0,0-1-8], [16:0-2-0,0-2-0]

Loading	(psf)	Spacing	2-0-0	CSI		DEFL	in	(loc)	l/defl	L/d	PLATES	GRIP
TCLL (roof)	20.0	Plate Grip DOL	1.15	TC	0.58	Vert(LL)	-0.12	13-16	>999	240	MT20	244/190
Snow (Pf)	20.0	Lumber DOL	1.15	BC	0.72	Vert(CT)	-0.25	13-16	>999	180		
TCDL	10.0	Rep Stress Incr	YES	WB	0.54	Horz(CT)	0.07	9	n/a	n/a		
BCLL	0.0*	Code	IRC2018/TPI2014	Matrix-MSH								
BCDL	10.0										Weight: 263 lb	FT = 20%

LUMBER
TOP CHORD 2x4 SP No.2 *Except* T2:2x6 SP No.2
BOT CHORD 2x6 SP No.2
WEBS 2x4 SP No.3

BRACING
TOP CHORD Structural wood sheathing directly applied or 3-4-12 oc purlins, except 2-0-0 oc purlins (4-10-7 max.): 4-7.
BOT CHORD Rigid ceiling directly applied or 10-0-0 oc bracing.

MiTek recommends that Stabilizers and required cross bracing be installed during truss erection, in accordance with Stabilizer Installation guide.

REACTIONS (lb/size) 2=1509/0-3-8, (min. 0-2-0), 9=1509/0-3-8, (min. 0-2-0)
Max Horiz 2=-182 (LC 12)
Max Uplift 2=-53 (LC 14), 9=-53 (LC 15)
Max Grav 2=1683 (LC 47), 9=1683 (LC 47)

FORCES (lb) - Max. Comp./Max. Ten. - All forces 250 (lb) or less except when shown.
TOP CHORD 2-25=-2790/32, 25-26=-2721/33, 3-26=-2642/52, 3-27=-2371/27, 4-27=-2321/59, 4-5=-2134/57, 5-28=-2290/79, 28-29=-2290/79, 29-30=-2290/79, 30-31=-2290/79, 31-32=-2290/79, 6-32=-2290/79, 6-7=-2146/55, 7-33=-2319/59, 8-33=-2369/27, 8-34=-2644/51, 34-35=-2722/32, 9-35=-2792/31
BOT CHORD 2-18=-76/2248, 17-18=-64/2248, 16-17=0/1888, 16-36=0/2200, 36-37=0/2201, 15-37=0/2212, 14-15=0/2219, 14-38=0/2204, 38-39=0/2193, 13-39=0/2191, 12-13=0/1886, 11-12=0/2249, 9-11=0/2249
WEBS 3-17=-534/170, 4-17=-197/254, 7-12=-193/266, 8-12=-537/169, 4-16=0/1012, 7-13=0/982, 5-16=-485/189, 6-13=-464/194

NOTES
1) Unbalanced roof live loads have been considered for this design.
2) Wind: ASCE 7-16; Vult=130mph (3-second gust) Vasd=103mph; TCDL=6.0psf; BCDL=6.0psf; h=25ft; Cat. II; Exp B; Enclosed; MWFRS (envelope) exterior zone and C-C Exterior(2E) -0-10-8 to 2-6-3, Interior (1) 2-6-3 to 6-1-3, Exterior(2R) 6-1-3 to 15-8-5, Interior (1) 15-8-5 to 18-2-11, Exterior(2R) 18-2-11 to 27-9-13, Interior (1) 27-9-13 to 31-4-13, Exterior(2E) 31-4-13 to 34-9-8 zone; cantilever left and right exposed ; end vertical left and right exposed;C-C for members and forces & MWFRS for reactions shown; Lumber DOL=1.60 plate grip DOL=1.60
3) TCLL: ASCE 7-16; Pr=20.0 psf (roof LL: Lum DOL=1.15 Plate DOL=1.15); Pf=20.0 psf (Lum DOL=1.15 Plate DOL=1.15); Is=1.0; Rough Cat B; Fully Exp.; Ce=0.9; Cs=1.00; Ct=1.10
4) Unbalanced snow loads have been considered for this design.
5) This truss has been designed for greater of min roof live load of 12.0 psf or 1.00 times flat roof load of 20.0 psf on overhangs non-concurrent with other live loads.
6) 200.0lb AC unit load placed on the bottom chord, 17-0-0 from left end, supported at two points, 5-0-0 apart.
7) Provide adequate drainage to prevent water ponding.
8) This truss has been designed for a 10.0 psf bottom chord live load nonconcurrent with any other live loads.
9) * This truss has been designed for a live load of 20.0psf on the bottom chord in all areas where a rectangle 3-06-00 tall by 2-00-00 wide will fit between the bottom chord and any other members, with BCDL = 10.0psf.
10) One H2.5A Simpson Strong-Tie connectors recommended to connect truss to bearing walls due to UPLIFT at jt(s) 9 and 2. This connection is for uplift only and does not consider lateral forces.
11) This truss is designed in accordance with the 2018 International Residential Code sections R502.11.1 and R802.10.2 and referenced standard ANSI/TPI 1.
12) Graphical purlin representation does not depict the size or the orientation of the purlin along the top and/or bottom chord.

LOAD CASE(S) Standard

Job	Truss	Truss Type	Qty	Ply	Lincoln A GRH-2nd Floor-Lincoln A GRH
24050001-B	T05	Hip	1	1	Job Reference (optional)

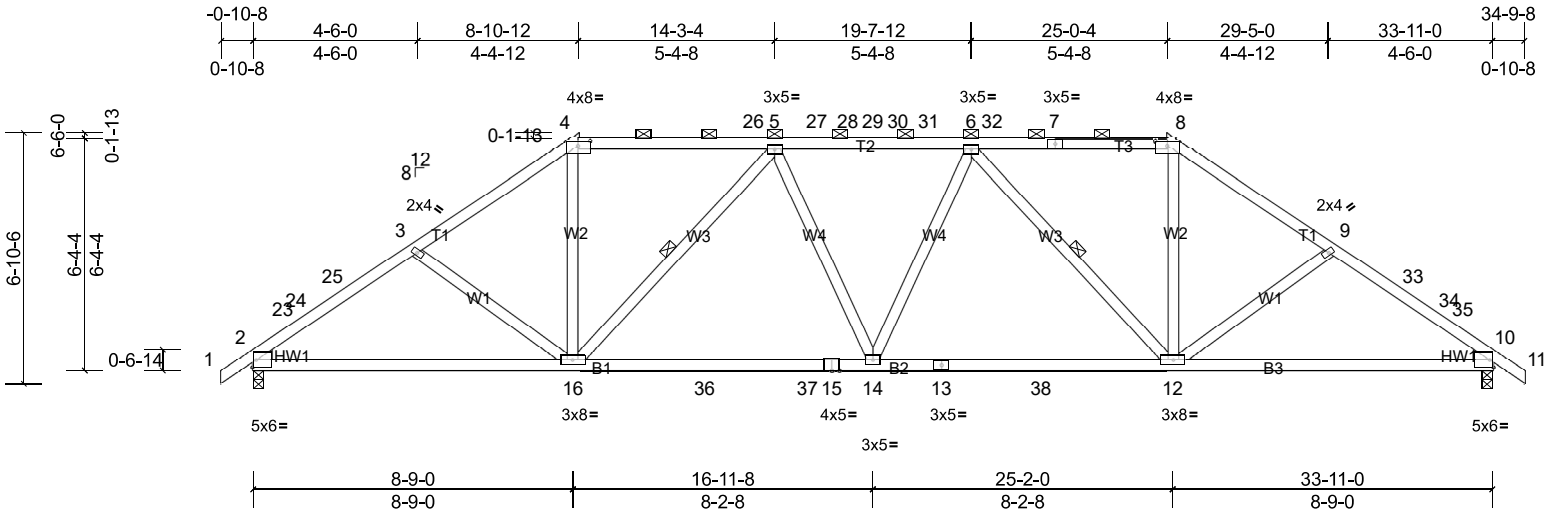

Scale = 1:63.1

Plate Offsets (X, Y): [4:0-4-0,0-1-9], [8:0-4-0,0-1-9]

Loading	(psf)	Spacing	2-0-0	CSI		DEFL	in	(loc)	l/defl	L/d	PLATES	GRIP
TCLL (roof)	20.0	Plate Grip DOL	1.15	TC	0.64	Vert(LL)	-0.22	14-16	>999	240	MT20	244/190
Snow (Pf)	20.0	Lumber DOL	1.15	BC	0.93	Vert(CT)	-0.36	14-16	>999	180		
TCDL	10.0	Rep Stress Incr	YES	WB	0.38	Horz(CT)	0.11	10	n/a	n/a		
BCLL	0.0*	Code	IRC2018/TPI2014	Matrix-MSH								
BCDL	10.0										Weight: 186 lb	FT = 20%

LUMBER

TOP CHORD 2x4 SP No.2
BOT CHORD 2x4 SP No.2 *Except* B2:2x4 SP No.1
WEBS 2x4 SP No.3
WEDGE Left: 2x4 SP No.3
Right: 2x4 SP No.3

BRACING

TOP CHORD Structural wood sheathing directly applied or 3-6-9 oc purlins, except 2-0-0 oc purlins (3-4-14 max.): 4-8.
BOT CHORD Rigid ceiling directly applied or 2-2-0 oc bracing.
WEBS 1 Row at midpt 5-16, 6-12

MiTek recommends that Stabilizers and required cross bracing be installed during truss erection, in accordance with Stabilizer Installation guide.

REACTIONS (lb/size) 2=1409/0-3-8, (min. 0-1-13), 10=1409/0-3-8, (min. 0-1-13)
Max Horiz 2=151 (LC 13)
Max Uplift 2=-157 (LC 14), 10=-157 (LC 15)
Max Grav 2=1553 (LC 5), 10=1553 (LC 6)

FORCES (lb) - Max. Comp./Max. Ten. - All forces 250 (lb) or less except when shown.

TOP CHORD 2-23=-2500/224, 23-24=-2490/226, 24-25=-2484/235, 3-25=-2457/247, 3-4=-2400/223, 4-26=-1988/226, 5-26=-1989/225, 5-27=-2664/210, 27-28=-2664/210, 28-29=-2664/210, 29-30=-2664/210, 30-31=-2664/210, 6-31=-2664/210, 6-32=-1988/225, 7-32=-1988/225, 7-8=-1988/226, 8-9=-2399/223, 9-33=-2456/247, 33-34=-2483/235, 34-35=-2489/226, 10-35=-2499/224
BOT CHORD 2-16=-217/2025, 16-36=-183/2526, 36-37=-183/2526, 15-37=-183/2526, 14-15=-183/2526, 13-14=-148/2529, 13-38=-148/2529, 12-38=-148/2529, 10-12=-115/2025
WEBS 3-16=-341/150, 4-16=-8/998, 8-12=-8/1000, 9-12=-340/150, 5-16=-885/184, 6-14=-25/253, 6-12=-889/184, 5-14=-26/259

NOTES

1) Unbalanced roof live loads have been considered for this design.
2) Wind: ASCE 7-16; Vult=130mph (3-second gust) Vasd=103mph; TCDL=6.0psf; BCDL=6.0psf; h=25ft; Cat. II; Exp B; Enclosed; MWFRS (envelope) exterior zone and C-C Exterior(2E) -0-10-8 to 2-6-3, Interior (1) 2-6-3 to 4-1-3, Exterior(2R) 4-1-3 to 13-8-5, Interior (1) 13-8-5 to 20-2-11, Exterior(2R) 20-2-11 to 29-6-8, Interior (1) 29-6-8 to 31-4-13, Exterior(2E) 31-4-13 to 34-9-8 zone; cantilever left and right exposed ; end vertical left and right exposed;C-C for members and forces & MWFRS for reactions shown; Lumber DOL=1.60 plate grip DOL=1.60
3) TCLL: ASCE 7-16; Pr=20.0 psf (roof LL: Lum DOL=1.15 Plate DOL=1.15); Pf=20.0 psf (Lum DOL=1.15 Plate DOL=1.15); Is=1.0; Rough Cat B; Fully Exp.; Ce=0.9; Cs=1.00; Ct=1.10
4) Unbalanced snow loads have been considered for this design.
5) This truss has been designed for greater of min roof live load of 12.0 psf or 1.00 times flat roof load of 20.0 psf on overhangs non-concurrent with other live loads.
6) Provide adequate drainage to prevent water ponding.
7) This truss has been designed for a 10.0 psf bottom chord live load nonconcurrent with any other live loads.
8) * This truss has been designed for a live load of 20.0psf on the bottom chord in all areas where a rectangle 3-06-00 tall by 2-00-00 wide will fit between the bottom chord and any other members, with BCDL = 10.0psf.
9) One H2.5A Simpson Strong-Tie connectors recommended to connect truss to bearing walls due to UPLIFT at jt(s) 10 and 2. This connection is for uplift only and does not consider lateral forces.
10) This truss is designed in accordance with the 2018 International Residential Code sections R502.11.1 and R802.10.2 and referenced standard ANSI/TPI 1.
11) Graphical purlin representation does not depict the size or the orientation of the purlin along the top and/or bottom chord.

LOAD CASE(S) Standard

Job	Truss	Truss Type	Qty	Ply	Lincoln A GRH-2nd Floor-Lincoln A GRH
24050001-B	T06	Hip	1	1	Job Reference (optional)

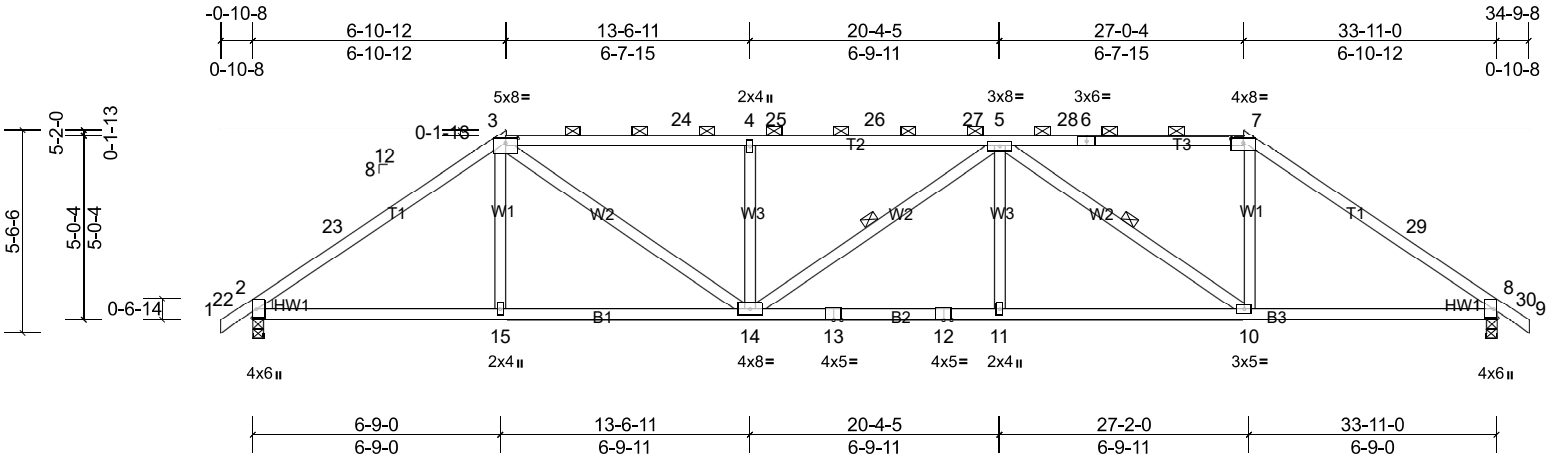

Scale = 1:62.8

Plate Offsets (X, Y): [3:0-4-0,0-1-9], [7:0-4-0,0-1-9]

Loading	(psf)	Spacing	2-0-0	CSI		DEFL	in	(loc)	l/defl	L/d	PLATES	GRIP
TCLL (roof)	20.0	Plate Grip DOL	1.15	TC	0.92	Vert(LL)	-0.18	10-11	>999	240	MT20	244/190
Snow (Pf)	20.0	Lumber DOL	1.15	BC	0.81	Vert(CT)	-0.33	11-14	>999	180		
TCDL	10.0	Rep Stress Incr	YES	WB	0.52	Horz(CT)	0.12	8	n/a	n/a		
BCLL	0.0*	Code	IRC2018/TPI2014	Matrix-MSH								
BCDL	10.0										Weight: 172 lb	FT = 20%

LUMBER
TOP CHORD 2x4 SP No.1 *Except* T2:2x4 SP 2400F 2.0E
BOT CHORD 2x4 SP No.2
WEBS 2x4 SP No.3
WEDGE Left: 2x4 SP No.3
Right: 2x4 SP No.3

BRACING
TOP CHORD Structural wood sheathing directly applied or 2-2-0 oc purlins, except 2-0-0 oc purlins (2-2-0 max.): 3-7.
BOT CHORD Rigid ceiling directly applied or 10-0-0 oc bracing.
WEBS 1 Row at midpt 5-14, 5-10

MiTek recommends that Stabilizers and required cross bracing be installed during truss erection, in accordance with Stabilizer Installation guide.

REACTIONS (lb/size) 2=1409/0-3-8, (min. 0-1-11), 8=1409/0-3-8, (min. 0-1-11)
Max Horiz 2=-120 (LC 12)
Max Uplift 2=-160 (LC 14), 8=-160 (LC 15)
Max Grav 2=1448 (LC 21), 8=1448 (LC 22)

FORCES (lb) - Max. Comp./Max. Ten. - All forces 250 (lb) or less except when shown.
TOP CHORD 2-23=-2211/190, 3-23=-2113/219, 3-24=-2812/280, 4-24=-2814/279, 4-25=-2812/279, 25-26=-2812/279, 26-27=-2812/279, 5-27=-2812/279, 5-28=-1774/239, 6-28=-1774/239, 6-7=-1774/240, 7-29=-2115/218, 8-29=-2213/189
BOT CHORD 2-15=-188/1797, 14-15=-191/1794, 13-14=-259/2818, 12-13=-259/2818, 11-12=-259/2818, 10-11=-259/2818, 8-10=-79/1799
WEBS 3-15=0/260, 7-10=-29/826, 4-14=-581/188, 3-14=-229/1252, 5-11=0/273, 5-10=-1271/233

NOTES
1) Unbalanced roof live loads have been considered for this design.
2) Wind: ASCE 7-16; Vult=130mph (3-second gust) Vasd=103mph; TCDL=6.0psf; BCDL=6.0psf; h=25ft; Cat. II; Exp B; Enclosed; MWFRS (envelope) exterior zone and C-C Exterior(2E) -0-10-8 to 2-6-3, Exterior(2R) 2-6-3 to 11-8-5, Interior (1) 11-8-5 to 22-2-11, Exterior(2R) 22-2-11 to 31-4-13, Exterior(2E) 31-4-13 to 34-9-8 zone; cantilever left and right exposed ; end vertical left and right exposed;C-C for members and forces & MWFRS for reactions shown; Lumber DOL=1.60 plate grip DOL=1.60
3) TCLL: ASCE 7-16; Pr=20.0 psf (roof LL: Lum DOL=1.15 Plate DOL=1.15); Pf=20.0 psf (Lum DOL=1.15 Plate DOL=1.15); Is=1.0; Rough Cat B; Fully Exp.; Ce=0.9; Cs=1.00; Ct=1.10
4) Unbalanced snow loads have been considered for this design.
5) This truss has been designed for greater of min roof live load of 12.0 psf or 1.00 times flat roof load of 20.0 psf on overhangs non-concurrent with other live loads.
6) Provide adequate drainage to prevent water ponding.
7) This truss has been designed for a 10.0 psf bottom chord live load nonconcurrent with any other live loads.
8) * This truss has been designed for a live load of 20.0psf on the bottom chord in all areas where a rectangle 3-06-00 tall by 2-00-00 wide will fit between the bottom chord and any other members.
9) One H2.5A Simpson Strong-Tie connectors recommended to connect truss to bearing walls due to UPLIFT at jt(s) 8 and 2. This connection is for uplift only and does not consider lateral forces.
10) This truss is designed in accordance with the 2018 International Residential Code sections R502.11.1 and R802.10.2 and referenced standard ANSI/TPI 1.
11) Graphical purlin representation does not depict the size or the orientation of the purlin along the top and/or bottom chord.

LOAD CASE(S) Standard

Job	Truss	Truss Type	Qty	Ply	Lincoln A GRH-2nd Floor-Lincoln A GRH
24050001-B	T07	Hip Girder	1	2	Job Reference (optional)

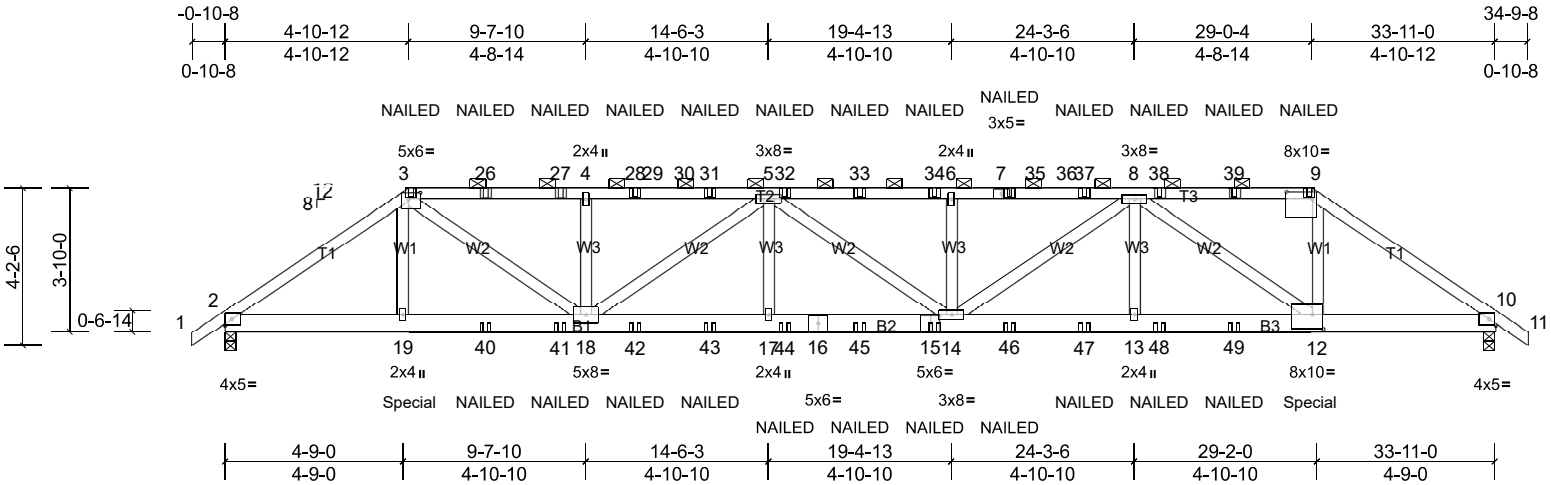

Scale = 1:61.6

Plate Offsets (X, Y): [3:0-3-12,0-2-0], [9:0-8-4,0-2-4], [12:0-3-8,0-4-8], [15:0-2-13,0-2-8]

Loading	(psf)	Spacing	2-0-0	CSI		DEFL	in	(loc)	l/defl	L/d	PLATES	GRIP
TCLL (roof)	20.0	Plate Grip DOL	1.15	TC	0.74	Vert(LL)	-0.31	14-17	>999	240	MT20	244/190
Snow (Pf)	20.0	Lumber DOL	1.15	BC	0.83	Vert(CT)	-0.48	14-17	>849	180		
TCDL	10.0	Rep Stress Incr	NO	WB	0.68	Horz(CT)	0.10	10	n/a	n/a		
BCLL	0.0*	Code	IRC2018/TPI2014	Matrix-MSH								
BCDL	10.0										Weight: 410 lb	FT = 20%

LUMBER
TOP CHORD 2x4 SP No.2
BOT CHORD 2x6 SP No.2
WEBS 2x4 SP No.3

BRACING
TOP CHORD Structural wood sheathing directly applied or 5-4-15 oc purlins, except 2-0-0 oc purlins (3-10-9 max.): 3-9.
BOT CHORD Rigid ceiling directly applied or 10-0-0 oc bracing.

REACTIONS (lb/size) 2=3121/0-3-8, (min. 0-1-14), 10=3119/0-3-8, (min. 0-1-14)
Max Horiz 2=91 (LC 11)
Max Uplift 2=-518 (LC 12), 10=-517 (LC 13)
Max Grav 2=3136 (LC 19), 10=3134 (LC 20)

FORCES (lb) - Max. Comp./Max. Ten. - All forces 250 (lb) or less except when shown.
TOP CHORD 2-3=-5026/825, 3-26=-6758/1103, 26-27=-6758/1103, 4-27=-6758/1103, 4-28=-6758/1103, 28-29=-6758/1103, 29-30=-6758/1103, 30-31=-6758/1103, 5-31=-6758/1103, 5-32=-7999/1298, 32-33=-7999/1298, 33-34=-7999/1298, 6-34=-7999/1298, 6-7=-7999/1298, 7-35=-7999/1298, 35-36=-7999/1298, 36-37=-7999/1298, 8-37=-7999/1298, 8-38=-4016/709, 38-39=-4016/709, 9-39=-4016/709, 9-10=-5006/820
BOT CHORD 2-19=-687/4129, 19-40=-688/4113, 40-41=-688/4113, 18-41=-688/4113, 18-42=-1309/8040, 42-43=-1309/8040, 17-43=-1309/8040, 17-44=-1309/8040, 16-44=-1309/8040, 16-45=-1309/8040, 15-45=-1309/8040, 14-15=-1309/8040, 14-46=-1068/6779, 46-47=-1068/6779, 13-47=-1068/6779, 13-48=-1068/6779, 48-49=-1068/6779, 12-49=-1068/6779, 10-12=-603/4114
WEBS 3-19=0/456, 3-18=-571/3276, 4-18=-760/272, 5-18=-1601/283, 5-17=0/330, 6-14=-640/251, 8-14=-267/1528, 8-13=0/354, 8-12=-3387/592, 9-12=-282/2321

NOTES

1) 2-ply truss to be connected together with 10d (0.131"x3") nails as follows:
Top chords connected as follows: 2x4 - 1 row at 0-9-0 oc.
Bottom chords connected as follows: 2x6 - 2 rows staggered at 0-9-0 oc.
Web connected as follows: 2x4 - 1 row at 0-9-0 oc.
2) All loads are considered equally applied to all plies, except if noted as front (F) or back (B) face in the LOAD CASE(S) section. Ply to ply connections have been provided to distribute only loads noted as (F) or (B), unless otherwise indicated.
3) Unbalanced roof live loads have been considered for this design.
4) Wind: ASCE 7-16; Vult=130mph (3-second gust) Vasd=103mph; TCDL=6.0psf; BCDL=6.0psf; h=25ft; Cat. II; Exp B; Enclosed; MWFRS (envelope) exterior zone; cantilever left and right exposed ; end vertical left and right exposed; Lumber DOL=1.60 plate grip DOL=1.60
5) TCLL: ASCE 7-16; Pr=20.0 psf (roof LL: Lum DOL=1.15 Plate DOL=1.15); Pf=20.0 psf (Lum DOL=1.15 Plate DOL=1.15); Is=1.0; Rough Cat B; Fully Exp.; Ce=0.9; Cs=1.00; Ct=1.10
6) Unbalanced snow loads have been considered for this design.
7) This truss has been designed for greater of min roof live load of 12.0 psf or 1.00 times flat roof load of 20.0 psf on overhangs non-concurrent with other live loads.
8) Provide adequate drainage to prevent water ponding.
9) This truss has been designed for a 10.0 psf bottom chord live load nonconcurrent with any other live loads.
10) * This truss has been designed for a live load of 20.0psf on the bottom chord in all areas where a rectangle 3-06-00 tall by 2-00-00 wide will fit between the bottom chord and any other members.
11) One H2.5A Simpson Strong-Tie connectors recommended to connect truss to bearing walls due to UPLIFT at jt(s) 2 and 10. This connection is for uplift only and does not consider lateral forces.
12) This truss is designed in accordance with the 2018 International Residential Code sections R502.11.1 and R802.10.2 and referenced standard ANSI/TPI 1.
13) Graphical purlin representation does not depict the size or the orientation of the purlin along the top and/or bottom chord.
14) "NAILED" indicates 3-10d (0.148"x3") or 3-12d (0.148"x3.25") toe-nails per NDS guidlines.
15) Hanger(s) or other connection device(s) shall be provided sufficient to support concentrated load(s) 423 lb down and 64 lb up at 4-10-12, and 423 lb down and 64 lb up at 28-11-8 on bottom chord. The design/selection of such connection device(s) is the responsibility of others.

LOAD CASE(S) Standard
1) Dead + Snow (balanced): Lumber Increase=1.15, Plate Increase=1.15
Uniform Loads (lb/ft)
Vert: 1-3=-60, 3-9=-60, 9-11=-60, 20-23=-20
Concentrated Loads (lb)
Vert: 7=-146 (B), 9=-146 (B), 19=-423 (B), 3=-146 (B), 12=-423 (B), 15=-62 (B), 26=-146 (B), 27=-146 (B), 28=-146 (B), 31=-146 (B), 32=-146 (B), 33=-146 (B), 34=-146 (B), 37=-146 (B), 38=-146 (B), 39=-146 (B), 40=-62 (B), 41=-62 (B), 42=-62 (B), 43=-62 (B), 44=-62 (B), 45=-62 (B), 46=-62 (B), 47=-62 (B), 48=-62 (B), 49=-62 (B)

Job	Truss	Truss Type	Qty	Ply	Lincoln A GRH-2nd Floor-Lincoln A GRH
24050001-B	T08	Roof Special	1	1	Job Reference (optional)

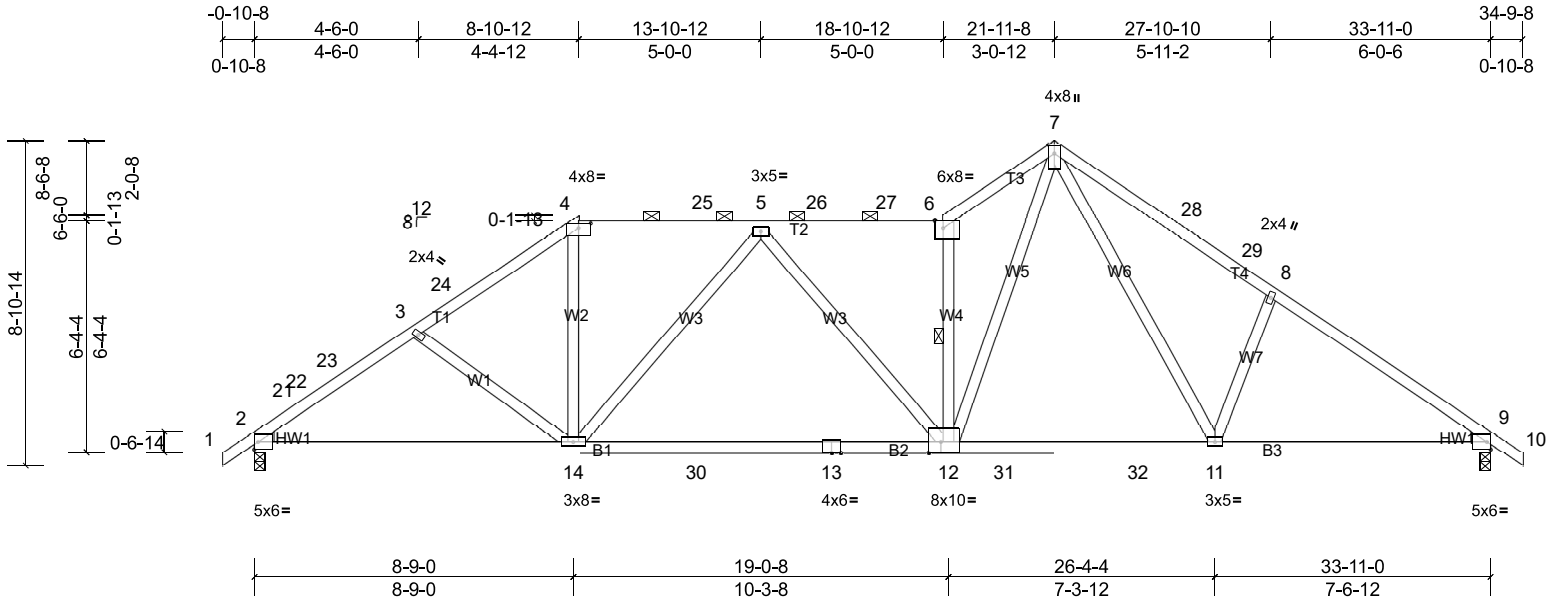

Scale = 1:63.2

Plate Offsets (X, Y): [4:0-4-0,0-1-9], [6:0-2-11,Edge], [12:0-4-0,Edge]

Loading	(psf)	Spacing	2-0-0	CSI		DEFL	in	(loc)	l/defl	L/d	PLATES	GRIP
TCLL (roof)	20.0	Plate Grip DOL	1.15	TC	0.78	Vert(LL)	-0.38	12-14	>999	240	MT20	244/190
Snow (Pf)	20.0	Lumber DOL	1.15	BC	0.94	Vert(CT)	-0.67	12-14	>605	180		
TCDL	10.0	Rep Stress Incr	YES	WB	0.93	Horz(CT)	0.08	9	n/a	n/a		
BCLL	0.0*	Code	IRC2018/TPI2014	Matrix-MSH								
BCDL	10.0										Weight: 194 lb	FT = 20%

LUMBER

TOP CHORD 2x4 SP No.2 *Except* T4:2x4 SP No.1
BOT CHORD 2x4 SP No.1
WEBS 2x4 SP No.3
WEDGE Left: 2x4 SP No.3
Right: 2x4 SP No.3

BRACING

TOP CHORD Structural wood sheathing directly applied or 2-2-0 oc purlins, except 2-0-0 oc purlins (3-4-6 max.): 4-6.
BOT CHORD Rigid ceiling directly applied or 10-0-0 oc bracing, Except: 2-2-0 oc bracing: 12-14.
WEBS 1 Row at midpt 6-12

MiTek recommends that Stabilizers and required cross bracing be installed during truss erection, in accordance with Stabilizer Installation guide.

REACTIONS (lb/size) 2=1409/0-3-8, (min. 0-1-13), 9=1409/0-3-8, (min. 0-1-14)
Max Horiz 2=201 (LC 13)
Max Uplift 2=-183 (LC 14), 9=-104 (LC 15)
Max Grav 2=1552 (LC 5), 9=1590 (LC 39)

FORCES (lb) - Max. Comp./Max. Ten. - All forces 250 (lb) or less except when shown.

TOP CHORD 2-21=-2622/265, 21-22=-2605/267, 22-23=-2595/275, 3-23=-2513/288, 3-24=-2429/241, 4-24=-2377/264, 4-25=-1993/259, 5-25=-1995/258, 5-26=-2535/255, 26-27=-2534/255, 6-27=-2533/255, 6-7=-3069/351, 7-28=-2438/304, 28-29=-2455/281, 8-29=-2527/268, 8-9=-2594/226
BOT CHORD 2-14=-286/2099, 14-30=-213/2409, 13-30=-213/2409, 12-13=-213/2409, 12-31=-50/1632, 31-32=-50/1632, 11-32=-50/1632, 9-11=-86/2071
WEBS 3-14=-337/153, 4-14=-30/1016, 6-12=-1914/275, 7-12=-261/2432, 7-11=-157/661, 8-11=-408/227, 5-14=-767/135, 5-12=-104/268

NOTES

1) Unbalanced roof live loads have been considered for this design.
2) Wind: ASCE 7-16; Vult=130mph (3-second gust) Vasd=103mph; TCDL=6.0psf; BCDL=6.0psf; h=25ft; Cat. II; Exp B; Enclosed; MWFRS (envelope) exterior zone and C-C Exterior(2E) -0-10-8 to 2-6-3, Interior (1) 2-6-3 to 5-6-1, Exterior(2R) 5-6-1 to 12-3-7, Interior (1) 12-3-7 to 18-10-12, Exterior(2R) 18-10-12 to 25-4-3, Interior (1) 25-4-3 to 31-4-13, Exterior(2E) 31-4-13 to 34-9-8 zone; cantilever left and right exposed ; end vertical left and right exposed;C-C for members and forces & MWFRS for reactions shown; Lumber DOL=1.60 plate grip DOL=1.60
3) TCLL: ASCE 7-16; Pr=20.0 psf (roof LL: Lum DOL=1.15 Plate DOL=1.15); Pf=20.0 psf (Lum DOL=1.15 Plate DOL=1.15); Is=1.0; Rough Cat B; Fully Exp.; Ce=0.9; Cs=1.00; Ct=1.10
4) Unbalanced snow loads have been considered for this design.
5) This truss has been designed for greater of min roof live load of 12.0 psf or 1.00 times flat roof load of 20.0 psf on overhangs non-concurrent with other live loads.
6) Provide adequate drainage to prevent water ponding.
7) This truss has been designed for a 10.0 psf bottom chord live load nonconcurrent with any other live loads.
8) * This truss has been designed for a live load of 20.0psf on the bottom chord in all areas where a rectangle 3-06-00 tall by 2-00-00 wide will fit between the bottom chord and any other members, with BCDL = 10.0psf.
9) One H2.5A Simpson Strong-Tie connectors recommended to connect truss to bearing walls due to UPLIFT at jt(s) 9 and 2. This connection is for uplift only and does not consider lateral forces.
10) This truss is designed in accordance with the 2018 International Residential Code sections R502.11.1 and R802.10.2 and referenced standard ANSI/TPI 1.
11) Graphical purlin representation does not depict the size or the orientation of the purlin along the top and/or bottom chord.

LOAD CASE(S) Standard

Job	Truss	Truss Type	Qty	Ply	Lincoln A GRH-2nd Floor-Lincoln A GRH
24050001-B	T09	Roof Special	1	1	Job Reference (optional)

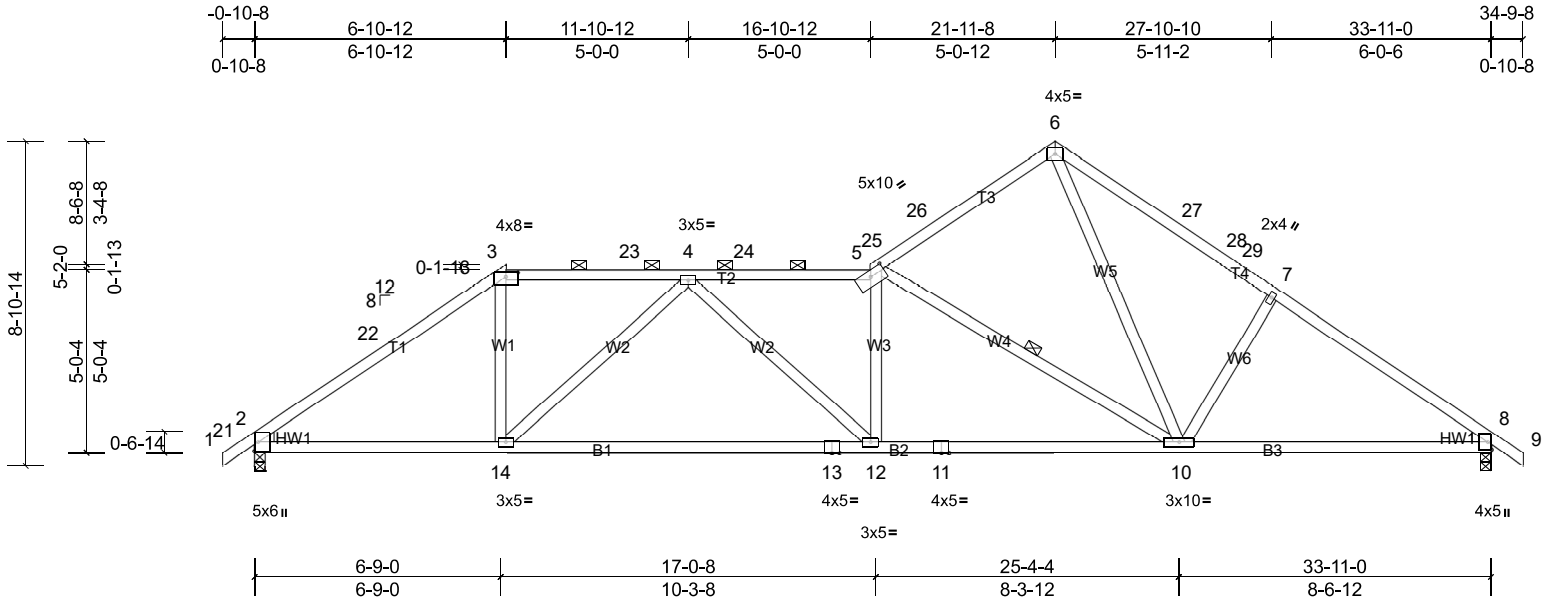

Scale = 1:63.2

Plate Offsets (X, Y): [3:0-4-0,0-1-9], [5:0-5-0,0-2-0]

Loading	(psf)	Spacing	2-0-0	CSI		DEFL	in	(loc)	l/defl	L/d	PLATES	GRIP
TCLL (roof)	20.0	Plate Grip DOL	1.15	TC	1.00	Vert(LL)	-0.28	12-14	>999	240	MT20	244/190
Snow (Pf)	20.0	Lumber DOL	1.15	BC	0.93	Vert(CT)	-0.63	12-14	>644	180		
TCDL	10.0	Rep Stress Incr	YES	WB	0.95	Horz(CT)	0.11	8	n/a	n/a		
BCLL	0.0*	Code	IRC2018/TPI2014	Matrix-MSH								
BCDL	10.0										Weight: 181 lb	FT = 20%

LUMBER

TOP CHORD 2x4 SP No.2 *Except* T4:2x4 SP No.1
BOT CHORD 2x4 SP No.2 *Except* B2:2x4 SP No.1
WEBS 2x4 SP No.3
WEDGE Left: 2x4 SP No.3
Right: 2x4 SP No.3

BRACING

TOP CHORD Structural wood sheathing directly applied, except
2-0-0 oc purlins (3-2-12 max.): 3-5.
BOT CHORD Rigid ceiling directly applied or 10-0-0 oc bracing, Except:
2-2-0 oc bracing: 12-14.
WEBS 1 Row at midpt 5-10

MiTek recommends that Stabilizers and required cross bracing be installed during truss erection, in accordance with Stabilizer Installation guide.

REACTIONS (lb/size) 2=1409/0-3-8, (min. 0-1-12),
8=1409/0-3-8, (min. 0-1-12)
Max Horiz 2=201 (LC 13)
Max Uplift 2=-183 (LC 14), 8=-104 (LC 15)
Max Grav 2=1458 (LC 43), 8=1501 (LC 47)

FORCES (lb) - Max. Comp./Max. Ten. - All forces 250 (lb) or less except when shown.
TOP CHORD 2-22=-2151/223, 3-22=-2067/246, 3-23=-1730/263, 4-23=-1732/262, 4-24=-2643/281, 5-24=-2642/281, 5-25=-1285/178, 25-26=-1271/189, 6-26=-1219/212, 6-27=-1910/276, 27-28=-1926/253, 28-29=-1974/245, 7-29=-2020/240, 7-8=-2183/229
BOT CHORD 2-14=-214/1694, 13-14=-291/2391, 12-13=-291/2391, 11-12=-231/2580, 10-11=-231/2580, 8-10=-87/1748
WEBS 3-14=0/836, 5-10=-1968/264, 6-10=-143/1505, 7-10=-400/219, 4-14=-1005/115, 4-12=-10/434

NOTES

1) Unbalanced roof live loads have been considered for this design.
2) Wind: ASCE 7-16; Vult=130mph (3-second gust) Vasd=103mph; TCDL=6.0psf; BCDL=6.0psf; h=25ft; Cat. II; Exp B; Enclosed; MWFRS (envelope) exterior zone and C-C Exterior(2E) -0-10-8 to 2-6-3, Interior (1) 2-6-3 to 3-6-1, Exterior(2R) 3-6-1 to 10-3-7, Interior (1) 10-3-7 to 18-6-13, Exterior(2R) 18-6-13 to 25-4-3, Interior (1) 25-4-3 to 31-4-13, Exterior(2E) 31-4-13 to 34-9-8 zone; cantilever left and right exposed ; end vertical left and right exposed;C-C for members and forces & MWFRS for reactions shown; Lumber DOL=1.60 plate grip DOL=1.60
3) TCLL: ASCE 7-16; Pr=20.0 psf (roof LL: Lum DOL=1.15 Plate DOL=1.15); Pf=20.0 psf (Lum DOL=1.15 Plate DOL=1.15); Is=1.0; Rough Cat B; Fully Exp.; Ce=0.9; Cs=1.00; Ct=1.10
4) Unbalanced snow loads have been considered for this design.
5) This truss has been designed for greater of min roof live load of 12.0 psf or 1.00 times flat roof load of 20.0 psf on overhangs non-concurrent with other live loads.
6) Provide adequate drainage to prevent water ponding.
7) This truss has been designed for a 10.0 psf bottom chord live load nonconcurrent with any other live loads.
8) * This truss has been designed for a live load of 20.0psf on the bottom chord in all areas where a rectangle 3-06-00 tall by 2-00-00 wide will fit between the bottom chord and any other members.
9) One H2.5A Simpson Strong-Tie connectors recommended to connect truss to bearing walls due to UPLIFT at jt(s) 8 and 2. This connection is for uplift only and does not consider lateral forces.
10) This truss is designed in accordance with the 2018 International Residential Code sections R502.11.1 and R802.10.2 and referenced standard ANSI/TPI 1.
11) Graphical purlin representation does not depict the size or the orientation of the purlin along the top and/or bottom chord.

LOAD CASE(S) Standard

Job	Truss	Truss Type	Qty	Ply	Lincoln A GRH-2nd Floor-Lincoln A GRH
24050001-B	T10	Roof Special Girder	1	2	Job Reference (optional)

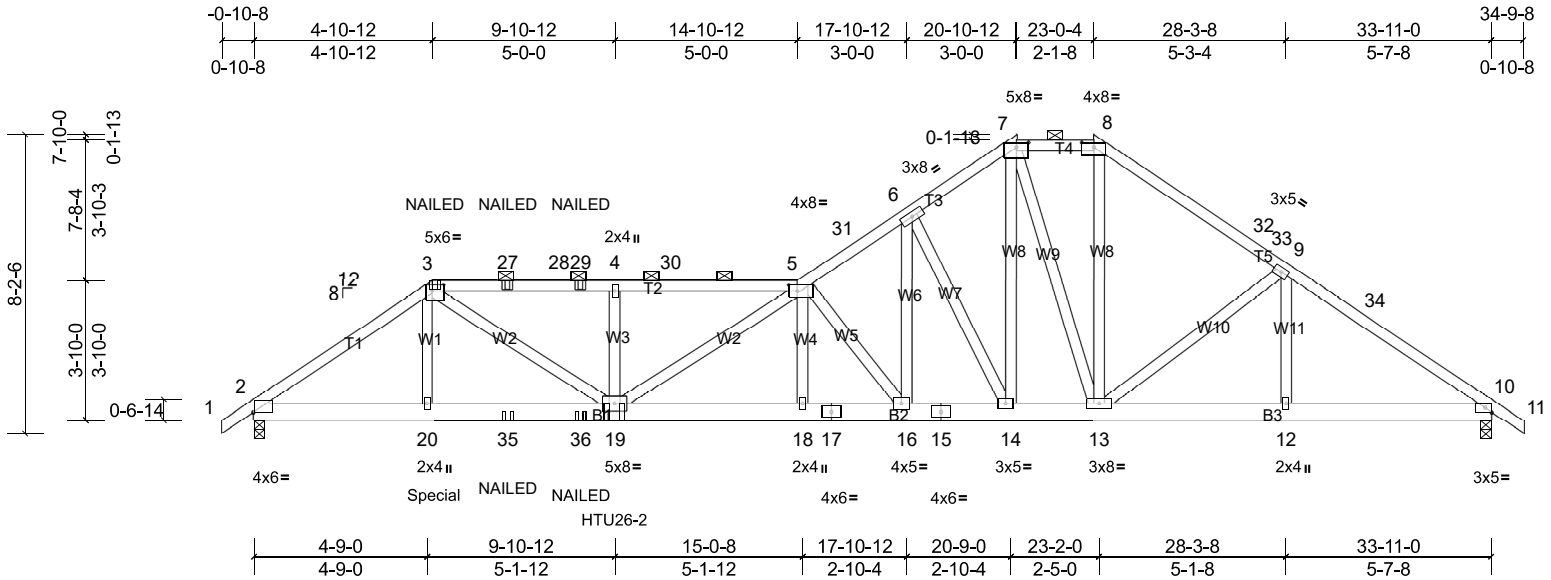

Scale = 1:63.2

Plate Offsets (X, Y): [2:Edge,0-0-1], [3:0-3-12,0-2-0], [5:0-2-12,0-2-0], [7:0-4-0,0-1-9], [8:0-4-0,0-1-9]

Loading	(psf)	Spacing	2-0-0	CSI		DEFL	in	(loc)	l/defl	L/d	PLATES	GRIP
TCLL (roof)	20.0	Plate Grip DOL	1.15	TC	0.91	Vert(LL)	-0.21	18-19	>999	240	MT20	244/190
Snow (Pf)	20.0	Lumber DOL	1.15	BC	0.64	Vert(CT)	-0.36	18-19	>999	180		
TCDL	10.0	Rep Stress Incr	NO	WB	0.63	Horz(CT)	0.07	10	n/a	n/a		
BCLL	0.0*	Code	IRC2018/TPI2014	Matrix-MSH								
BCDL	10.0										Weight: 479 lb	FT = 20%

LUMBER
TOP CHORD 2x4 SP No.2
BOT CHORD 2x6 SP No.2
WEBS 2x4 SP No.3

BRACING
TOP CHORD Structural wood sheathing directly applied or 5-4-10 oc purlins, except 2-0-0 oc purlins (3-6-8 max.): 3-5, 7-8.
BOT CHORD Rigid ceiling directly applied or 10-0-0 oc bracing.

REACTIONS (lb/size) 2=3031/0-3-8, (min. 0-1-14), 10=1923/0-3-8, (min. 0-1-8)
Max Horiz 2=182 (LC 11)
Max Uplift 2=-445 (LC 12), 10=-184 (LC 13)
Max Grav 2=3176 (LC 41), 10=2120 (LC 41)

FORCES (lb) - Max. Comp./Max. Ten. - All forces 250 (lb) or less except when shown.
TOP CHORD 2-3=-4937/702, 3-27=-6447/899, 27-28=-6447/899, 28-29=-6447/899, 4-29=-6447/899, 4-30=-6447/899, 5-30=-6447/899, 5-31=-4614/541, 6-31=-4548/552, 6-7=-3173/407, 7-8=-2313/307, 8-32=-2791/347, 32-33=-2910/316, 9-33=-2934/313, 9-34=-3078/277, 10-34=-3264/259
BOT CHORD 2-20=-607/3985, 20-35=-607/3965, 35-36=-607/3965, 19-36=-607/3965, 18-19=-768/6273, 17-18=-766/6277, 16-17=-766/6277, 15-16=-405/3819, 14-15=-405/3819, 13-14=-200/2552, 12-13=-166/2641, 10-12=-166/2641
WEBS 3-20=0/492, 3-19=-335/3063, 4-19=-699/229, 5-19=-333/664, 5-16=-3861/552, 6-16=-374/2917, 6-14=-2629/426, 7-14=-346/2329, 7-13=-986/175, 8-13=-147/1224, 9-13=-407/199

NOTES

1) 2-ply truss to be connected together with 10d (0.131"x3") nails as follows:
Top chords connected as follows: 2x4 - 1 row at 0-9-0 oc.
Bottom chords connected as follows: 2x6 - 2 rows staggered at 0-9-0 oc.
Web connected as follows: 2x4 - 1 row at 0-9-0 oc, Except member 4-19 2x4 - 1 row at 0-6-0 oc.
2) All loads are considered equally applied to all plies, except if noted as front (F) or back (B) face in the LOAD CASE(S) section. Ply to ply connections have been provided to distribute only loads noted as (F) or (B), unless otherwise indicated.
3) Unbalanced roof live loads have been considered for this design.
4) Wind: ASCE 7-16; Vult=130mph (3-second gust) Vasd=103mph; TCDL=6.0psf; BCDL=6.0psf; h=25ft; Cat. II; Exp B; Enclosed; MWFRS (envelope) exterior zone; cantilever left and right exposed ; end vertical left and right exposed; Lumber DOL=1.60 plate grip DOL=1.60
5) TCLL: ASCE 7-16; Pr=20.0 psf (roof LL: Lum DOL=1.15 Plate DOL=1.15); Pf=20.0 psf (Lum DOL=1.15 Plate DOL=1.15); Is=1.0; Rough Cat B; Fully Exp.; Ce=0.9; Cs=1.00; Ct=1.10
6) Unbalanced snow loads have been considered for this design.
7) This truss has been designed for greater of min roof live load of 12.0 psf or 1.00 times flat roof load of 20.0 psf on overhangs non-concurrent with other live loads.
8) Provide adequate drainage to prevent water ponding.
9) This truss has been designed for a 10.0 psf bottom chord live load nonconcurrent with any other live loads.
10) * This truss has been designed for a live load of 20.0psf on the bottom chord in all areas where a rectangle 3-06-00 tall by 2-00-00 wide will fit between the bottom chord and any other members.
11) One H2.5A Simpson Strong-Tie connectors recommended to connect truss to bearing walls due to UPLIFT at jt(s) 2 and 10. This connection is for uplift only and does not consider lateral forces.
12) This truss is designed in accordance with the 2018 International Residential Code sections R502.11.1 and R802.10.2 and referenced standard ANSI/TPI 1.
13) Graphical purlin representation does not depict the size or the orientation of the purlin along the top and/or bottom chord.
14) Use Simpson Strong-Tie HTU26-2 (20-10d Girder, 14-10d Truss, Single Ply Girder) or equivalent at 9-10-8 from the left end to connect truss(es) J04 (2 ply 2x6 SP) to front face of bottom chord.
15) Fill all nail holes where hanger is in contact with lumber.
16) "NAILED" indicates 3-10d (0.148"x3") or 3-12d (0.148"x3.25") toe-nails per NDS guidlines.
17) Hanger(s) or other connection device(s) shall be provided sufficient to support concentrated load(s) 423 lb down and 64 lb up at 4-10-12 on bottom chord. The design/selection of such connection device(s) is the responsibility of others.

LOAD CASE(S) Standard
1) Dead + Snow (balanced): Lumber Increase=1.15, Plate Increase=1.15
Uniform Loads (lb/ft)
Vert: 1-3=-60, 3-5=-60, 5-7=-60, 7-8=-60, 8-11=-60, 21-24=-20
Concentrated Loads (lb)
Vert: 20=-423 (F), 19=-1151 (F), 3=-146 (F), 27=-146 (F), 29=-146 (F), 35=-62 (F), 36=-62 (F)

Job	Truss	Truss Type	Qty	Ply	Lincoln A GRH-2nd Floor-Lincoln A GRH
24050001-B	T11	Hip Girder	1	2	Job Reference (optional)

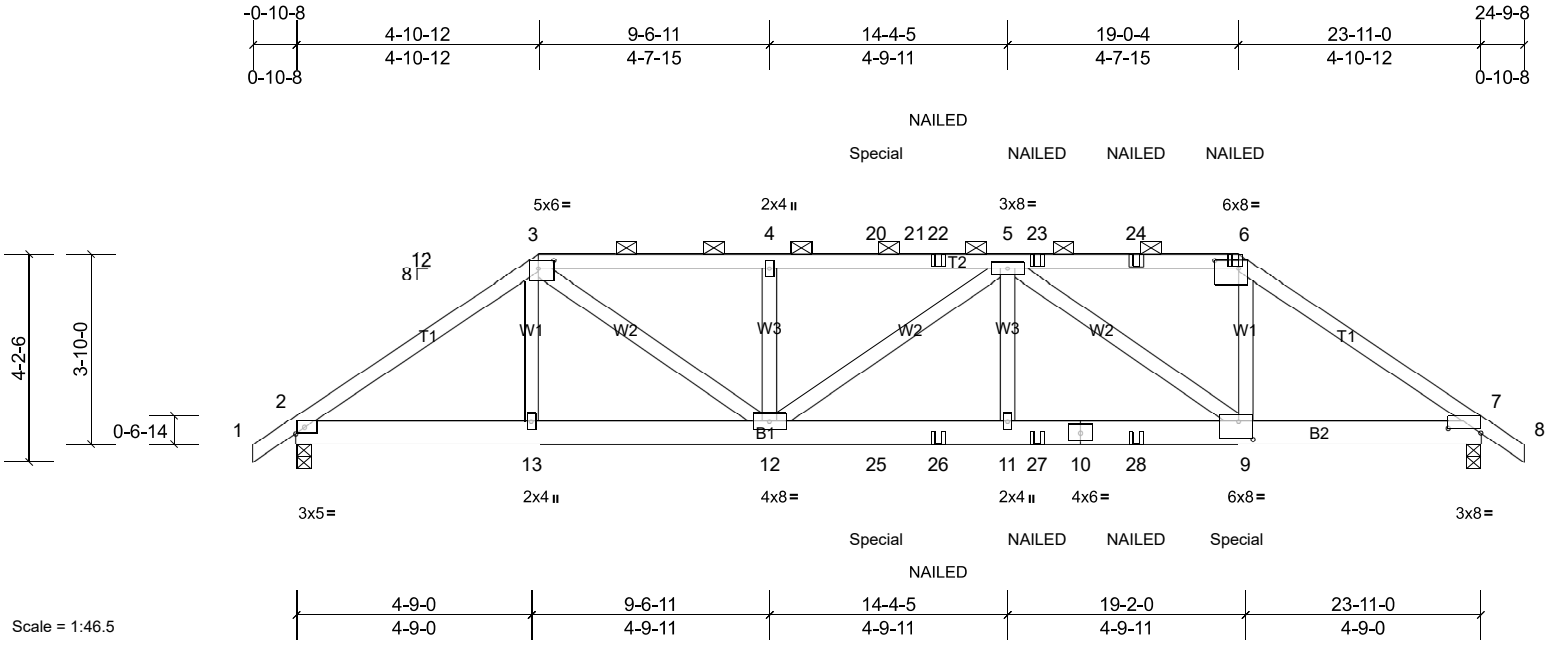

Plate Offsets (X, Y): [3:0-3-12,0-2-0], [6:0-5-12,0-2-0], [7:0-8-0,0-1-3], [9:0-3-8,0-4-4]

Loading	(psf)	Spacing	2-0-0	CSI		DEFL	in	(loc)	l/defl	L/d	PLATES	GRIP
TCLL (roof)	20.0	Plate Grip DOL	1.15	TC	0.65	Vert(LL)	-0.12	11-12	>999	240	MT20	244/190
Snow (Pf)	20.0	Lumber DOL	1.15	BC	0.89	Vert(CT)	-0.19	11-12	>999	180		
TCDL	10.0	Rep Stress Incr	NO	WB	0.52	Horz(CT)	0.04	7	n/a	n/a		
BCLL	0.0*	Code	IRC2018/TPI2014	Matrix-MSH								
BCDL	10.0										Weight: 281 lb	FT = 20%

LUMBER
TOP CHORD 2x4 SP No.2
BOT CHORD 2x6 SP No.2
WEBS 2x4 SP No.3

BRACING
TOP CHORD Structural wood sheathing directly applied or 6-0-0 oc purlins, except 2-0-0 oc purlins (4-11-7 max.): 3-6.
BOT CHORD Rigid ceiling directly applied or 10-0-0 oc bracing.

REACTIONS (lb/size) 2=1909/0-3-8, (min. 0-1-8), 7=2383/0-3-8, (min. 0-1-8)
Max Horiz 2=91 (LC 11)
Max Uplift 2=-281 (LC 12), 7=-362 (LC 13)
Max Grav 2=1945 (LC 37), 7=2440 (LC 37)

FORCES (lb) - Max. Comp./Max. Ten. - All forces 250 (lb) or less except when shown.
TOP CHORD 2-3=-3027/427, 3-4=-4507/640, 4-20=-4507/640, 20-21=-4507/640, 21-22=-4507/640, 5-22=-4507/640, 5-23=-3026/496, 23-24=-3026/496, 6-24=-3026/496, 6-7=-3777/557
BOT CHORD 2-13=-329/2472, 12-13=-332/2475, 12-25=-671/4852, 25-26=-671/4852, 11-26=-671/4852, 11-27=-671/4852, 10-27=-671/4852, 10-28=-671/4852, 9-28=-671/4852, 7-9=-390/3095
WEBS 3-12=-416/2531, 4-12=-643/180, 5-12=-570/175, 5-11=0/689, 5-9=-2250/353, 6-9=-149/1655

NOTES
1) 2-ply truss to be connected together with 10d (0.131"x3") nails as follows:
Top chords connected as follows: 2x4 - 1 row at 0-9-0 oc.
Bottom chords connected as follows: 2x6 - 2 rows staggered at 0-9-0 oc.
Web connected as follows: 2x4 - 1 row at 0-9-0 oc.
2) All loads are considered equally applied to all plies, except if noted as front (F) or back (B) face in the LOAD CASE(S) section. Ply to ply connections have been provided to distribute only loads noted as (F) or (B), unless otherwise indicated.
3) Unbalanced roof live loads have been considered for this design.
4) Wind: ASCE 7-16; Vult=130mph (3-second gust) Vasd=103mph; TCDL=6.0psf; BCDL=6.0psf; h=25ft; Cat. II; Exp B; Enclosed; MWFRS (envelope) exterior zone; cantilever left and right exposed ; end vertical left and right exposed; Lumber DOL=1.60 plate grip DOL=1.60
5) TCLL: ASCE 7-16; Pr=20.0 psf (roof LL: Lum DOL=1.15 Plate DOL=1.15); Pf=20.0 psf (Lum DOL=1.15 Plate DOL=1.15); Is=1.0; Rough Cat B; Fully Exp.; Ce=0.9; Cs=1.00; Ct=1.10
6) Unbalanced snow loads have been considered for this design.
7) This truss has been designed for greater of min roof live load of 12.0 psf or 1.00 times flat roof load of 20.0 psf on overhangs non-concurrent with other live loads.
8) Provide adequate drainage to prevent water ponding.
9) This truss has been designed for a 10.0 psf bottom chord live load nonconcurrent with any other live loads.
10) * This truss has been designed for a live load of 20.0psf on the bottom chord in all areas where a rectangle 3-06-00 tall by 2-00-00 wide will fit between the bottom chord and any other members.
11) One H2.5A Simpson Strong-Tie connectors recommended to connect truss to bearing walls due to UPLIFT at jt(s) 2 and 7. This connection is for uplift only and does not consider lateral forces.
12) This truss is designed in accordance with the 2018 International Residential Code sections R502.11.1 and R802.10.2 and referenced standard ANSI/TPI 1.
13) Graphical purlin representation does not depict the size or the orientation of the purlin along the top and/or bottom chord.
14) "NAILED" indicates 3-10d (0.148"x3") or 3-12d (0.148"x3.25") toe-nails per NDS guidlines.
15) Hanger(s) or other connection device(s) shall be provided sufficient to support concentrated load(s) 323 lb down and 86 lb up at 11-8-8 on top chord, and 799 lb down and 80 lb up at 11-8-8, and 423 lb down and 64 lb up at 18-11-8 on bottom chord. The design/selection of such connection device(s) is the responsibility of others.

LOAD CASE(S) Standard
1) Dead + Snow (balanced): Lumber Increase=1.15, Plate Increase=1.15
Uniform Loads (lb/ft)
Vert: 1-3=-60, 3-6=-60, 6-8=-60, 14-17=-20
Concentrated Loads (lb)
Vert: 6=-146 (F), 9=-423 (F), 20=-292 (F), 22=-146 (F), 23=-146 (F), 24=-146 (F), 25=-790 (F), 26=-62 (F), 27=-62 (F), 28=-62 (F)

Job	Truss	Truss Type	Qty	Ply	Lincoln A GRH-2nd Floor-Lincoln A GRH
24050001-B	T12	Hip	1	1	Job Reference (optional)

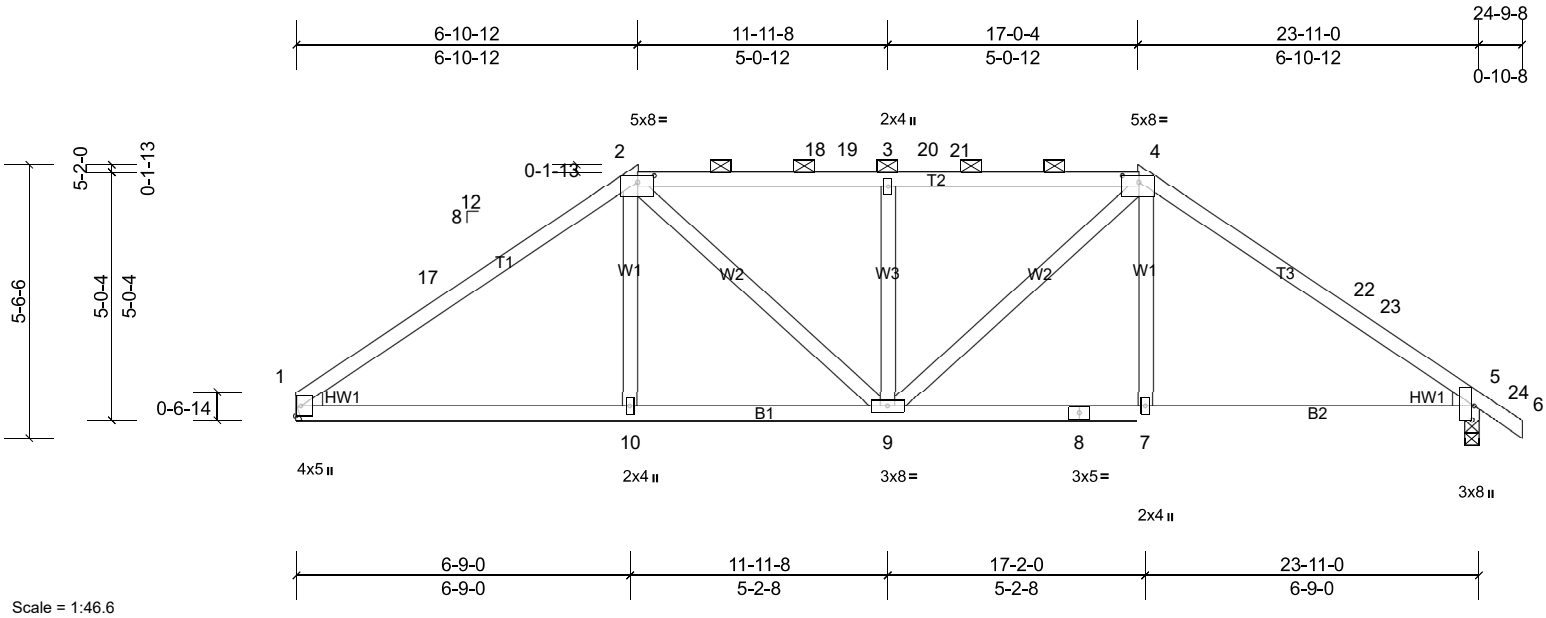

Scale = 1:46.6

Plate Offsets (X, Y): [2:0-4-0,0-1-9], [4:0-4-0,0-1-9], [5:0-3-8,Edge]

Loading	(psf)	Spacing	2-0-0	CSI		DEFL	in	(loc)	l/defl	L/d	PLATES	GRIP
TCLL (roof)	20.0	Plate Grip DOL	1.15	TC	0.99	Vert(LL)	-0.09	7-13	>999	240	MT20	244/190
Snow (Pf)	20.0	Lumber DOL	1.15	BC	0.66	Vert(CT)	-0.15	7-13	>999	180		
TCDL	10.0	Rep Stress Incr	YES	WB	0.26	Horz(CT)	0.04	5	n/a	n/a		
BCLL	0.0*	Code	IRC2018/TPI2014	Matrix-MSH								
BCDL	10.0										Weight: 118 lb	FT = 20%

LUMBER
TOP CHORD 2x4 SP No.2 *Except* T1:2x4 SP No.1
BOT CHORD 2x4 SP No.2
WEBS 2x4 SP No.3
WEDGE Left: 2x4 SP No.3
Right: 2x4 SP No.3

BRACING
TOP CHORD Structural wood sheathing directly applied, except
2-0-0 oc purlins (4-3-11 max.): 2-4.
BOT CHORD Rigid ceiling directly applied or 10-0-0 oc bracing.

MiTek recommends that Stabilizers and required cross bracing be installed during truss erection, in accordance with Stabilizer Installation guide.

REACTIONS (lb/size) 1=956/ Mechanical, (min. 0-1-8), 5=1010/0-3-8, (min. 0-1-8)
Max Horiz 1=-115 (LC 10)
Max Uplift 1=-97 (LC 14), 5=-114 (LC 15)
Max Grav 1=1040 (LC 41), 5=1110 (LC 41)

FORCES (lb) - Max. Comp./Max. Ten. - All forces 250 (lb) or less except when shown.
TOP CHORD 1-17=-1425/150, 2-17=-1328/176, 2-18=-1458/207, 18-19=-1460/207, 3-19=-1460/207, 3-20=-1460/207, 20-21=-1460/207, 4-21=-1458/207, 4-22=-1325/174, 22-23=-1353/146, 5-23=-1422/143
BOT CHORD 1-10=-115/1111, 9-10=-85/1107, 8-9=-26/1105, 7-8=-26/1105, 5-7=-24/1109
WEBS 2-10=0/251, 4-7=0/251, 3-9=-565/153, 2-9=-134/482, 4-9=-136/485

NOTES
1) Unbalanced roof live loads have been considered for this design.
2) Wind: ASCE 7-16; Vult=130mph (3-second gust) Vasd=103mph; TCDL=6.0psf; BCDL=6.0psf; h=25ft; Cat. II; Exp B; Enclosed; MWFRS (envelope) exterior zone and C-C Exterior(2E) 0-0-0 to 3-0-0, Exterior(2R) 3-0-0 to 11-1-11, Interior (1) 11-1-11 to 12-9-5, Exterior(2R) 12-9-5 to 21-3-3, Interior (1) 21-3-3 to 21-9-8, Exterior (2E) 21-9-8 to 24-9-8 zone; cantilever left and right exposed ; end vertical left and right exposed;C-C for members and forces & MWFRS for reactions shown; Lumber DOL=1.60 plate grip DOL=1.60
3) TCLL: ASCE 7-16; Pr=20.0 psf (roof LL: Lum DOL=1.15 Plate DOL=1.15); Pf=20.0 psf (Lum DOL=1.15 Plate DOL=1.15); Is=1.0; Rough Cat B; Fully Exp.; Ce=0.9; Cs=1.00; Ct=1.10
4) Unbalanced snow loads have been considered for this design.
5) This truss has been designed for greater of min roof live load of 12.0 psf or 1.00 times flat roof load of 20.0 psf on overhangs non-concurrent with other live loads.
6) Provide adequate drainage to prevent water ponding.
7) This truss has been designed for a 10.0 psf bottom chord live load nonconcurrent with any other live loads.
8) * This truss has been designed for a live load of 20.0psf on the bottom chord in all areas where a rectangle 3-06-00 tall by 2-00-00 wide will fit between the bottom chord and any other members.
9) Refer to girder(s) for truss to truss connections.
10) Provide mechanical connection (by others) of truss to bearing plate capable of withstanding 97 lb uplift at joint 1.
11) One H2.5A Simpson Strong-Tie connectors recommended to connect truss to bearing walls due to UPLIFT at jt(s) 5. This connection is for uplift only and does not consider lateral forces.
12) This truss is designed in accordance with the 2018 International Residential Code sections R502.11.1 and R802.10.2 and referenced standard ANSI/TPI 1.
13) Graphical purlin representation does not depict the size or the orientation of the purlin along the top and/or bottom chord.

LOAD CASE(S) Standard

Job	Truss	Truss Type	Qty	Ply	Lincoln A GRH-2nd Floor-Lincoln A GRH
24050001-B	T13	Hip	1	1	Job Reference (optional)

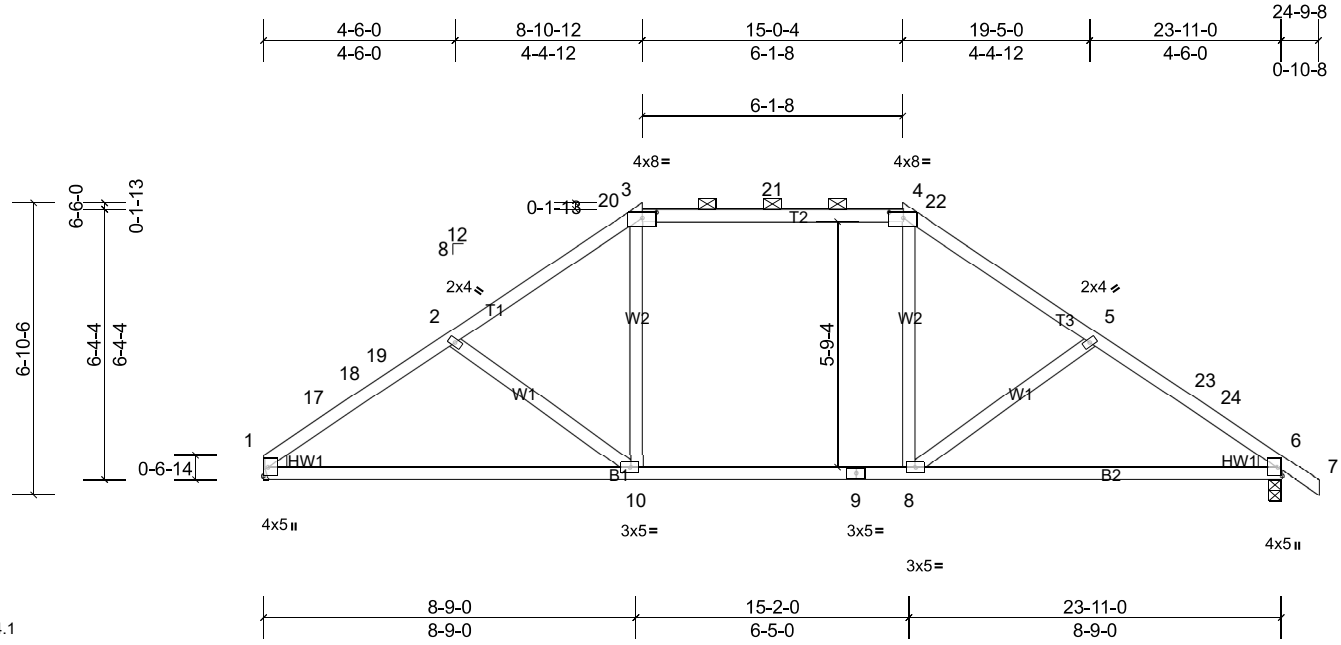

Plate Offsets (X, Y): [3:0-4-0,0-1-9], [4:0-4-0,0-1-9]

Loading	(psf)	Spacing	2-0-0	CSI		DEFL	in	(loc)	l/defl	L/d	PLATES	GRIP
TCLL (roof)	20.0	Plate Grip DOL	1.15	TC	1.00	Vert(LL)	-0.39	10-16	>730	240	MT20	244/190
Snow (Pf)	20.0	Lumber DOL	1.15	BC	0.92	Vert(CT)	-0.47	10-16	>607	180		
TCDL	10.0	Rep Stress Incr	YES	WB	0.23	Horz(CT)	0.04	6	n/a	n/a		
BCLL	0.0*	Code	IRC2018/TPI2014	Matrix-MSH								
BCDL	10.0										Weight: 112 lb	FT = 20%

LUMBER

TOP CHORD 2x4 SP No.2
BOT CHORD 2x4 SP No.2
WEBS 2x4 SP No.3
WEDGE Left: 2x4 SP No.3
Right: 2x4 SP No.3

BRACING

TOP CHORD Structural wood sheathing directly applied or 4-3-9 oc purlins, except 2-0-0 oc purlins: 3-4.
BOT CHORD Rigid ceiling directly applied or 2-2-0 oc bracing.

MiTek recommends that Stabilizers and required cross bracing be installed during truss erection, in accordance with Stabilizer Installation guide.

REACTIONS (lb/size) 1=956/ Mechanical, (min. 0-1-8), 6=1010/0-3-8, (min. 0-1-8)
Max Horiz 1=-147 (LC 10)
Max Uplift 1=-92 (LC 14), 6=-109 (LC 15)
Max Grav 1=1181 (LC 47), 6=1226 (LC 47)

FORCES (lb) - Max. Comp./Max. Ten. - All forces 250 (lb) or less except when shown.
TOP CHORD 1-17=-1853/171, 17-18=-1799/175, 18-19=-1791/185, 2-19=-1723/194, 2-20=-1583/183, 3-20=-1400/185, 3-21=-1247/195, 4-21=-1247/195, 4-22=-1399/184, 5-22=-1583/181, 5-23=-1721/189, 23-24=-1798/170, 6-24=-1850/166
BOT CHORD 1-10=-156/1485, 9-10=-6/1189, 8-9=-6/1189, 6-8=-70/1481
WEBS 2-10=-403/186, 3-10=0/510, 4-8=0/508, 5-8=-401/184

NOTES

1) Unbalanced roof live loads have been considered for this design.
2) Wind: ASCE 7-16; Vult=130mph (3-second gust) Vasd=103mph; TCDL=6.0psf; BCDL=6.0psf; h=25ft; Cat. II; Exp B; Enclosed; MWFRS (envelope) exterior zone and C-C Exterior(2E) 0-0-0 to 3-0-0, Interior (1) 3-0-0 to 4-4-8, Exterior(2R) 4-4-8 to 19-6-8, Interior (1) 19-6-8 to 21-9-8, Exterior(2E) 21-9-8 to 24-9-8 zone; cantilever left and right exposed ; end vertical left and right exposed;C-C for members and forces & MWFRS for reactions shown; Lumber DOL=1.60 plate grip DOL=1.60
3) TCLL: ASCE 7-16; Pr=20.0 psf (roof LL: Lum DOL=1.15 Plate DOL=1.15); Pf=20.0 psf (Lum DOL=1.15 Plate DOL=1.15); Is=1.0; Rough Cat B; Fully Exp.; Ce=0.9; Cs=1.00; Ct=1.10
4) Unbalanced snow loads have been considered for this design.
5) This truss has been designed for greater of min roof live load of 12.0 psf or 1.00 times flat roof load of 20.0 psf on overhangs non-concurrent with other live loads.
6) Provide adequate drainage to prevent water ponding.
7) This truss has been designed for a 10.0 psf bottom chord live load nonconcurrent with any other live loads.
8) * This truss has been designed for a live load of 20.0psf on the bottom chord in all areas where a rectangle 3-06-00 tall by 2-00-00 wide will fit between the bottom chord and any other members, with BCDL = 10.0psf.
9) Refer to girder(s) for truss to truss connections.
10) Provide mechanical connection (by others) of truss to bearing plate capable of withstanding 92 lb uplift at joint 1.
11) One H2.5A Simpson Strong-Tie connectors recommended to connect truss to bearing walls due to UPLIFT at jt(s) 6. This connection is for uplift only and does not consider lateral forces.
12) This truss is designed in accordance with the 2018 International Residential Code sections R502.11.1 and R802.10.2 and referenced standard ANSI/TPI 1.
13) Graphical purlin representation does not depict the size or the orientation of the purlin along the top and/or bottom chord.

LOAD CASE(S) Standard

Job	Truss	Truss Type	Qty	Ply	Lincoln A GRH-2nd Floor-Lincoln A GRH
24050001-B	T14	Common	1	1	Job Reference (optional)

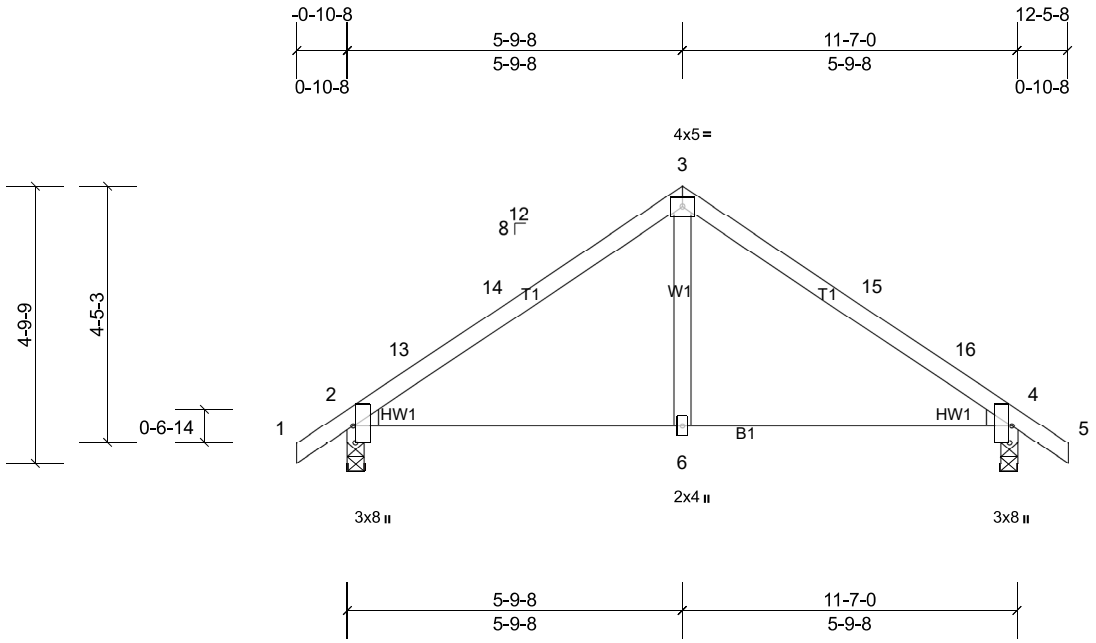

Scale = 1:39.9

Plate Offsets (X, Y): [2:0-3-8,Edge], [4:0-3-8,Edge]

Loading	(psf)	Spacing	2-0-0	CSI		DEFL	in	(loc)	l/defl	L/d	PLATES	GRIP
TCLL (roof)	20.0	Plate Grip DOL	1.15	TC	0.64	Vert(LL)	-0.06	6-12	>999	240	MT20	244/190
Snow (Pf)	20.0	Lumber DOL	1.15	BC	0.52	Vert(CT)	-0.09	6-12	>999	180		
TCDL	10.0	Rep Stress Incr	YES	WB	0.10	Horz(CT)	0.02	2	n/a	n/a		
BCLL	0.0*	Code	IRC2018/TPI2014	Matrix-MSH								
BCDL	10.0										Weight: 49 lb	FT = 20%

LUMBER

TOP CHORD 2x4 SP No.2
BOT CHORD 2x4 SP No.2
WEBS 2x4 SP No.3
WEDGE Left: 2x4 SP No.3
Right: 2x4 SP No.3

BRACING

TOP CHORD Structural wood sheathing directly applied or 6-0-0 oc purlins.
BOT CHORD Rigid ceiling directly applied or 10-0-0 oc bracing.

MiTek recommends that Stabilizers and required cross bracing be installed during truss erection, in accordance with Stabilizer Installation guide.

REACTIONS (lb/size) 2=516/0-3-8, (min. 0-1-8), 4=516/0-3-8, (min. 0-1-8)
Max Horiz 2=104 (LC 13)
Max Uplift 2=-57 (LC 14), 4=-57 (LC 15)
Max Grav 2=609 (LC 21), 4=609 (LC 22)

FORCES (lb) - Max. Comp./Max. Ten. - All forces 250 (lb) or less except when shown.
TOP CHORD 2-13=-616/100, 13-14=-518/112, 3-14=-510/132, 3-15=-510/132, 15-16=-518/112, 4-16=-616/100
BOT CHORD 2-6=-55/399, 4-6=0/399
WEBS 3-6=0/260

NOTES

1) Unbalanced roof live loads have been considered for this design.
2) Wind: ASCE 7-16; Vult=130mph (3-second gust) Vasd=103mph; TCDL=6.0psf; BCDL=6.0psf; h=25ft; Cat. II; Exp B; Enclosed; MWFRS (envelope) exterior zone and C-C Exterior(2E) -0-10-8 to 2-1-8, Interior (1) 2-1-8 to 2-9-8, Exterior(2R) 2-9-8 to 8-9-8, Interior (1) 8-9-8 to 9-5-8, Exterior(2E) 9-5-8 to 12-5-8 zone; cantilever left and right exposed ; end vertical left and right exposed;C-C for members and forces & MWFRS for reactions shown; Lumber DOL=1.60 plate grip DOL=1.60
3) TCLL: ASCE 7-16; Pr=20.0 psf (roof LL: Lum DOL=1.15 Plate DOL=1.15); Pf=20.0 psf (Lum DOL=1.15 Plate DOL=1.15); Is=1.0; Rough Cat B; Fully Exp.; Ce=0.9; Cs=1.00; Ct=1.10
4) Unbalanced snow loads have been considered for this design.
5) This truss has been designed for greater of min roof live load of 12.0 psf or 1.00 times flat roof load of 20.0 psf on overhangs non-concurrent with other live loads.
6) This truss has been designed for a 10.0 psf bottom chord live load nonconcurrent with any other live loads.
7) * This truss has been designed for a live load of 20.0psf on the bottom chord in all areas where a rectangle 3-06-00 tall by 2-00-00 wide will fit between the bottom chord and any other members.
8) One H2.5A Simpson Strong-Tie connectors recommended to connect truss to bearing walls due to UPLIFT at jt(s) 2 and 4. This connection is for uplift only and does not consider lateral forces.
9) This truss is designed in accordance with the 2018 International Residential Code sections R502.11.1 and R802.10.2 and referenced standard ANSI/TPI 1.

LOAD CASE(S) Standard

Job	Truss	Truss Type	Qty	Ply	Lincoln A GRH-2nd Floor-Lincoln A GRH
24050001-B	T15	Common	2	1	Job Reference (optional)

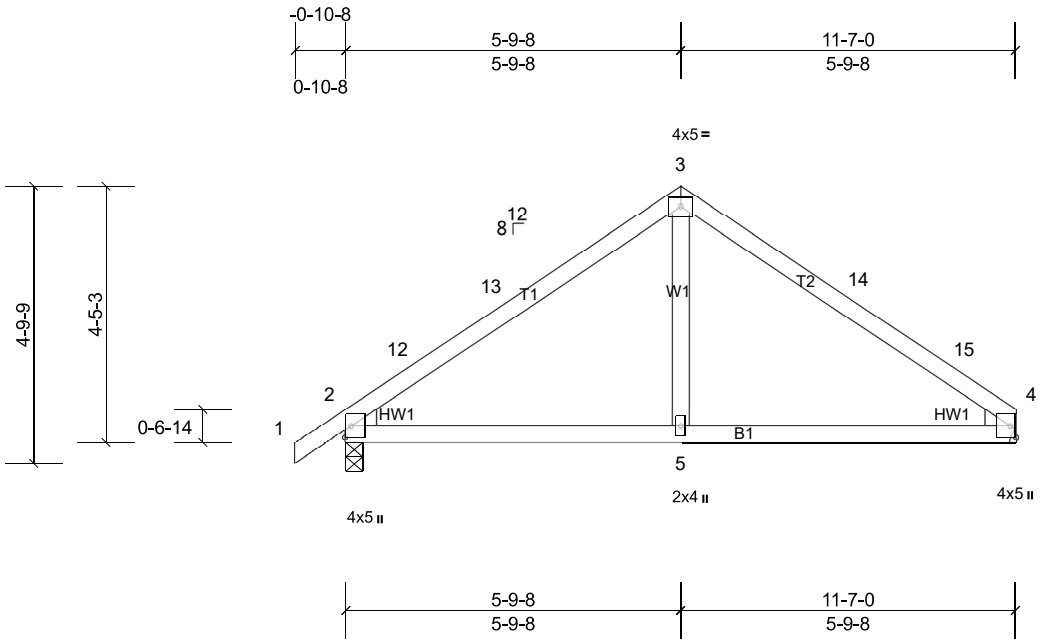

Scale = 1:39.9

Loading	(psf)	Spacing	2-0-0	CSI		DEFL	in	(loc)	l/defl	L/d	PLATES	GRIP
TCLL (roof)	20.0	Plate Grip DOL	1.15	TC	0.65	Vert(LL)	-0.07	5-11	>999	240	MT20	244/190
Snow (Pf)	20.0	Lumber DOL	1.15	BC	0.55	Vert(CT)	-0.09	5-11	>999	180		
TCDL	10.0	Rep Stress Incr	YES	WB	0.10	Horz(CT)	0.02	2	n/a	n/a		
BCLL	0.0*	Code	IRC2018/TPI2014	Matrix-MSH								
BCDL	10.0										Weight: 47 lb	FT = 20%

LUMBER

TOP CHORD 2x4 SP No.2
BOT CHORD 2x4 SP No.2
WEBS 2x4 SP No.3
WEDGE Left: 2x4 SP No.3
Right: 2x4 SP No.3

BRACING

TOP CHORD Structural wood sheathing directly applied or 5-10-10 oc purlins.
BOT CHORD Rigid ceiling directly applied or 10-0-0 oc bracing.

MiTek recommends that Stabilizers and required cross bracing be installed during truss erection, in accordance with Stabilizer Installation guide.

REACTIONS (lb/size) 2=518/0-3-8, (min. 0-1-8), 4=461/Mechanical, (min. 0-1-8)
Max Horiz 2=100 (LC 13)
Max Uplift 2=-57 (LC 14), 4=-39 (LC 15)
Max Grav 2=610 (LC 21), 4=554 (LC 22)

FORCES (lb) - Max. Comp./Max. Ten. - All forces 250 (lb) or less except when shown.
TOP CHORD 2-12=-619/103, 12-13=-521/115, 3-13=-512/135, 3-14=-512/134, 14-15=-514/116, 4-15=-620/103
BOT CHORD 2-5=-62/403, 4-5=-14/403
WEBS 3-5=0/261

NOTES

1) Unbalanced roof live loads have been considered for this design.
2) Wind: ASCE 7-16; Vult=130mph (3-second gust) Vasd=103mph; TCDL=6.0psf; BCDL=6.0psf; h=25ft; Cat. II; Exp B; Enclosed; MWFRS (envelope) exterior zone and C-C Exterior(2E) -0-10-8 to 2-1-8, Interior (1) 2-1-8 to 2-9-8, Exterior(2R) 2-9-8 to 8-7-0, Exterior(2E) 8-7-0 to 11-7-0 zone; cantilever left and right exposed ; end vertical left and right exposed;C-C for members and forces & MWFRS for reactions shown; Lumber DOL=1.60 plate grip DOL=1.60
3) TCLL: ASCE 7-16; Pr=20.0 psf (roof LL: Lum DOL=1.15 Plate DOL=1.15); Pf=20.0 psf (Lum DOL=1.15 Plate DOL=1.15); Is=1.0; Rough Cat B; Fully Exp.; Ce=0.9; Cs=1.00; Ct=1.10
4) Unbalanced snow loads have been considered for this design.
5) This truss has been designed for greater of min roof live load of 12.0 psf or 1.00 times flat roof load of 20.0 psf on overhangs non-concurrent with other live loads.
6) This truss has been designed for a 10.0 psf bottom chord live load nonconcurrent with any other live loads.
7) * This truss has been designed for a live load of 20.0psf on the bottom chord in all areas where a rectangle 3-06-00 tall by 2-00-00 wide will fit between the bottom chord and any other members.
8) Refer to girder(s) for truss to truss connections.
9) Provide mechanical connection (by others) of truss to bearing plate capable of withstanding 39 lb uplift at joint 4.
10) One H2.5A Simpson Strong-Tie connectors recommended to connect truss to bearing walls due to UPLIFT at jt(s) 2. This connection is for uplift only and does not consider lateral forces.
11) This truss is designed in accordance with the 2018 International Residential Code sections R502.11.1 and R802.10.2 and referenced standard ANSI/TPI 1.

LOAD CASE(S) Standard

Job	Truss	Truss Type	Qty	Ply	Lincoln A GRH-2nd Floor-Lincoln A GRH
24050001-B	T16	Common Supported Gable	1	1	Job Reference (optional)

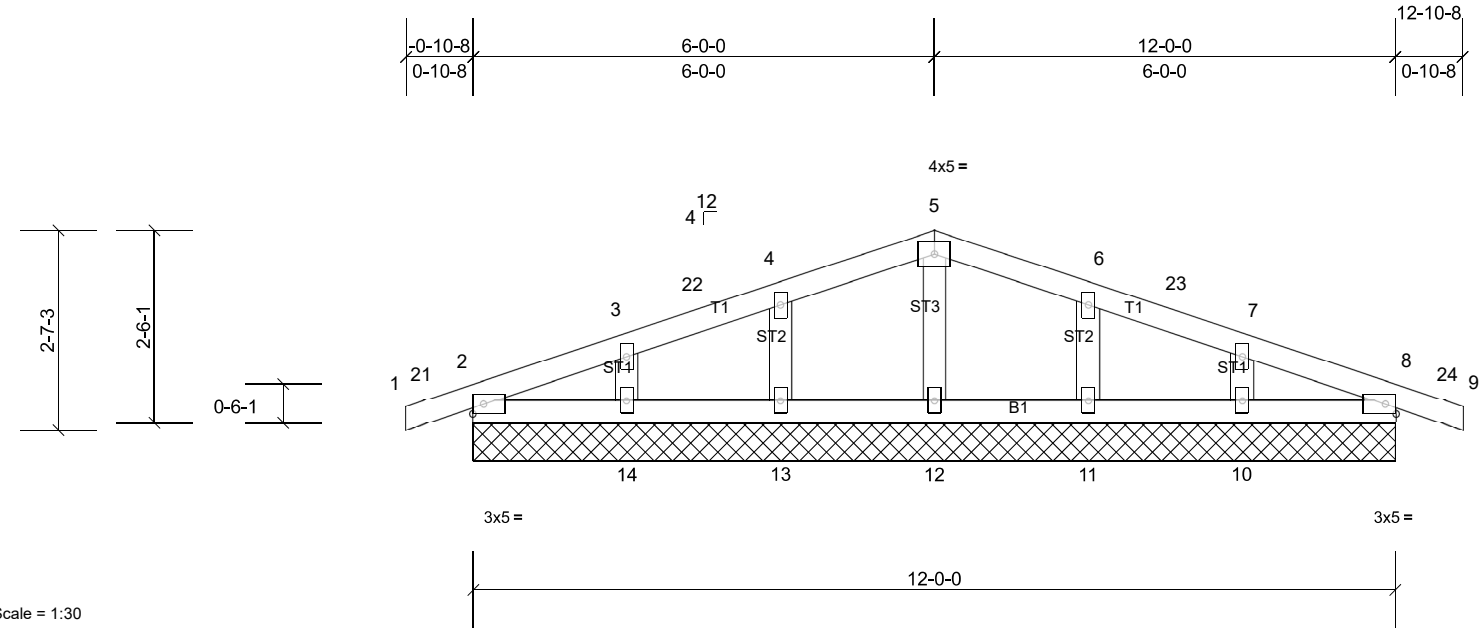

Scale = 1:30

Loading	(psf)	Spacing	1-11-4	CSI		DEFL	in	(loc)	l/defl	L/d	PLATES	GRIP
TCLL (roof)	20.0	Plate Grip DOL	1.15	TC	0.23	Vert(LL)	n/a	-	n/a	999	MT20	244/190
Snow (Pf)	20.0	Lumber DOL	1.15	BC	0.15	Vert(CT)	n/a	-	n/a	999		
TCDL	10.0	Rep Stress Incr	YES	WB	0.06	Horz(CT)	0.00	10	n/a	n/a		
BCLL	0.0*	Code	IRC2018/TPI2014	Matrix-MSH								
BCDL	10.0										Weight: 48 lb	FT = 20%

LUMBER
TOP CHORD 2x4 SP No.2
BOT CHORD 2x4 SP No.2
OTHERS 2x4 SP No.3

BRACING
TOP CHORD Structural wood sheathing directly applied or 10-0-0 oc purlins.
BOT CHORD Rigid ceiling directly applied or 6-0-0 oc bracing.

REACTIONS All bearings 12-0-0.
(lb) - Max Horiz 2=-35 (LC 15), 15=-35 (LC 15)
Max Uplift All uplift 100 (lb) or less at joint(s) 2, 10, 11, 12, 13, 14, 15
Max Grav All reactions 250 (lb) or less at joint (s) 2, 11, 13, 14, 15 except 10=361 (LC 22), 12=338 (LC 22)

FORCES (lb) - Max. Comp./Max. Ten. - All forces 250 (lb) or less except when shown.
TOP CHORD 2-3=-176/289, 3-22=-132/265, 4-22=-125/283, 4-5=-79/284, 5-6=-80/299, 6-23=-120/292, 7-8=-181/313
BOT CHORD 2-14=-260/208, 13-14=-260/208, 12-13=-260/208, 11-12=-260/208, 10-11=-260/208, 8-10=-260/208
WEBS 5-12=-284/162

NOTES
1) Unbalanced roof live loads have been considered for this design.
2) Wind: ASCE 7-16; Vult=130mph (3-second gust) Vasd=103mph; TCDL=6.0psf; BCDL=6.0psf; h=25ft; Cat. II; Exp B; Enclosed; MWFRS (envelope) exterior zone and C-C Corner(3E) -0-10-8 to 2-0-0, Exterior(2N) 2-0-0 to 3-0-0, Corner(3R) 3-0-0 to 9-0-0, Exterior(2N) 9-0-0 to 9-10-8, Corner(3E) 9-10-8 to 12-10-8 zone; cantilever left and right exposed ; end vertical left and right exposed;C-C for members and forces & MWFRS for reactions shown; Lumber DOL=1.60 plate grip DOL=1.60
3) Truss designed for wind loads in the plane of the truss only. For studs exposed to wind (normal to the face), see Standard Industry Gable End Details as applicable, or consult qualified building designer as per ANSI/TPI 1.
4) TCLL: ASCE 7-16; Pr=20.0 psf (roof LL: Lum DOL=1.15 Plate DOL=1.15); Pf=20.0 psf (Lum DOL=1.15 Plate DOL=1.15); Is=1.0; Rough Cat B; Fully Exp.; Ce=0.9; Cs=1.00; Ct=1.10
5) Unbalanced snow loads have been considered for this design.
6) This truss has been designed for greater of min roof live load of 12.0 psf or 1.00 times flat roof load of 20.0 psf on overhangs non-concurrent with other live loads.
7) All plates are 2x4 MT20 unless otherwise indicated.
8) Gable requires continuous bottom chord bearing.
9) Gable studs spaced at 2-0-0 oc.
10) This truss has been designed for a 10.0 psf bottom chord live load nonconcurrent with any other live loads.
11) * This truss has been designed for a live load of 20.0psf on the bottom chord in all areas where a rectangle 3-06-00 tall by 2-00-00 wide will fit between the bottom chord and any other members.
12) Provide mechanical connection (by others) of truss to bearing plate capable of withstanding 100 lb uplift at joint (s) 2, 12, 13, 14, 11, 10, 2.
13) This truss is designed in accordance with the 2018 International Residential Code sections R502.11.1 and R802.10.2 and referenced standard ANSI/TPI 1.

LOAD CASE(S) Standard

Job	Truss	Truss Type	Qty	Ply	Lincoln A GRH-2nd Floor-Lincoln A GRH
24050001-B	T17	Common	5	1	Job Reference (optional)

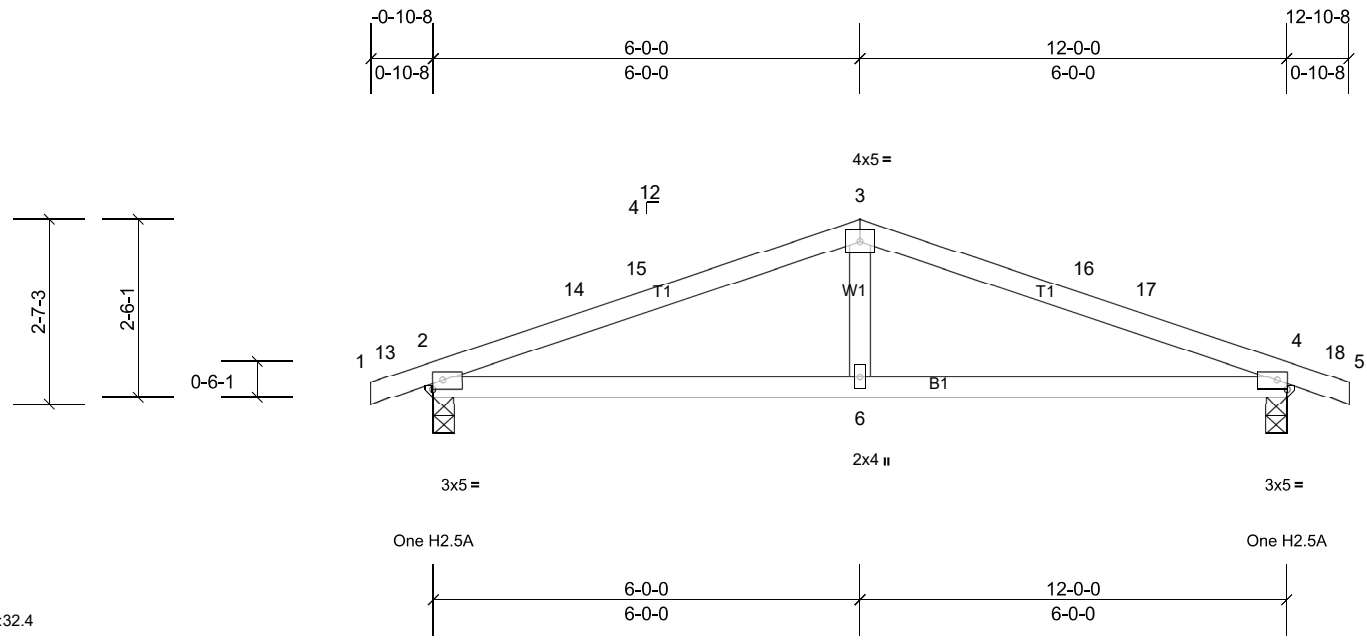

Scale = 1:32.4

Loading	(psf)	Spacing	2-0-0	CSI		DEFL	in	(loc)	l/defl	L/d	PLATES	GRIP
TCLL (roof)	20.0	Plate Grip DOL	1.15	TC	0.66	Vert(LL)	-0.06	6-12	>999	240	MT20	244/190
Snow (Pf)	20.0	Lumber DOL	1.15	BC	0.47	Vert(CT)	-0.09	6-12	>999	180		
TCDL	10.0	Rep Stress Incr	YES	WB	0.10	Horz(CT)	0.01	4	n/a	n/a		
BCLL	0.0*	Code	IRC2018/TPI2014	Matrix-MSH								
BCDL	10.0										Weight: 43 lb	FT = 20%

LUMBER
TOP CHORD 2x4 SP No.2
BOT CHORD 2x4 SP No.2
WEBS 2x4 SP No.3

BRACING
TOP CHORD Structural wood sheathing directly applied or 4-7-14 oc purlins.
BOT CHORD Rigid ceiling directly applied or 10-0-0 oc bracing.

MiTek recommends that Stabilizers and required cross bracing be installed during truss erection, in accordance with Stabilizer Installation guide.

REACTIONS (lb/size) 2=532/0-3-8, (min. 0-1-8), 4=532/0-3-8, (min. 0-1-8)
Max Horiz 2=-36 (LC 15)
Max Uplift 2=-89 (LC 10), 4=-89 (LC 11)
Max Grav 2=638 (LC 21), 4=638 (LC 22)

FORCES (lb) - Max. Comp./Max. Ten. - All forces 250 (lb) or less except when shown.
TOP CHORD 2-14=-858/364, 14-15=-813/367, 3-15=-809/378, 3-16=-809/378, 16-17=-813/367, 4-17=-858/364
BOT CHORD 2-6=-260/756, 4-6=-260/756
WEBS 3-6=0/255

NOTES
1) Unbalanced roof live loads have been considered for this design.
2) Wind: ASCE 7-16; Vult=130mph (3-second gust) Vasd=103mph; TCDL=6.0psf; BCDL=6.0psf; h=25ft; Cat. II; Exp B; Enclosed; MWFRS (envelope) exterior zone and C-C Exterior(2E) -0-10-8 to 2-1-8, Interior (1) 2-1-8 to 3-0-0, Exterior(2R) 3-0-0 to 9-0-0, Interior (1) 9-0-0 to 9-10-8, Exterior(2E) 9-10-8 to 12-10-8 zone; cantilever left and right exposed ; end vertical left and right exposed;C-C for members and forces & MWFRS for reactions shown; Lumber DOL=1.60 plate grip DOL=1.60
3) TCLL: ASCE 7-16; Pr=20.0 psf (roof LL: Lum DOL=1.15 Plate DOL=1.15); Pf=20.0 psf (Lum DOL=1.15 Plate DOL=1.15); Is=1.0; Rough Cat B; Fully Exp.; Ce=0.9; Cs=1.00; Ct=1.10
4) Unbalanced snow loads have been considered for this design.
5) This truss has been designed for greater of min roof live load of 12.0 psf or 1.00 times flat roof load of 20.0 psf on overhangs non-concurrent with other live loads.
6) This truss has been designed for a 10.0 psf bottom chord live load nonconcurrent with any other live loads.
7) * This truss has been designed for a live load of 20.0psf on the bottom chord in all areas where a rectangle 3-06-00 tall by 2-00-00 wide will fit between the bottom chord and any other members.
8) One H2.5A Simpson Strong-Tie connectors recommended to connect truss to bearing walls due to UPLIFT at jt(s) 2 and 4. This connection is for uplift only and does not consider lateral forces.
9) This truss is designed in accordance with the 2018 International Residential Code sections R502.11.1 and R802.10.2 and referenced standard ANSI/TPI 1.

LOAD CASE(S) Standard

Job	Truss	Truss Type	Qty	Ply	Lincoln A GRH-2nd Floor-Lincoln A GRH
24050001-B	T18	Roof Special	1	1	Job Reference (optional)

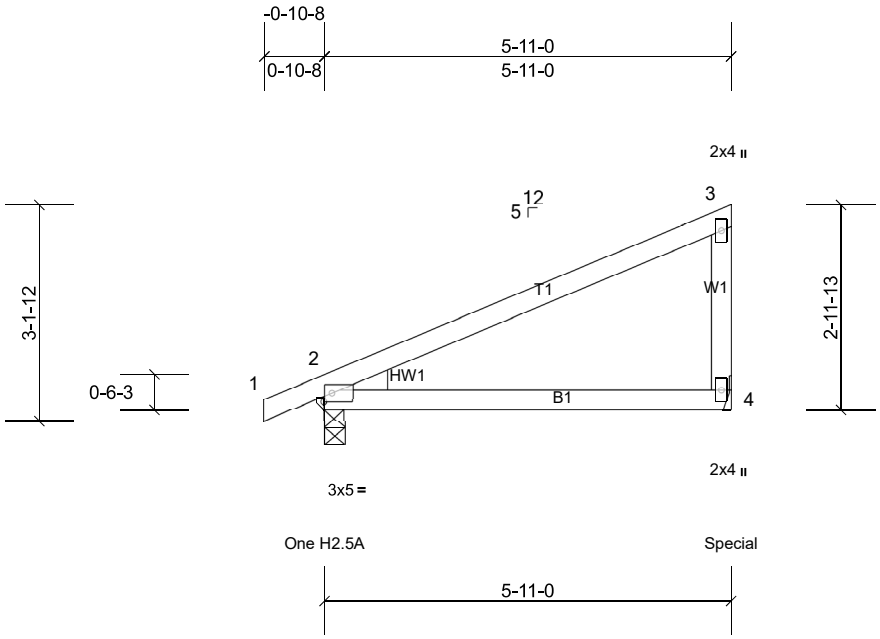

Scale = 1:33.5

Loading	(psf)	Spacing	2-0-0	CSI		DEFL	in	(loc)	l/defl	L/d	PLATES	GRIP
TCLL (roof)	20.0	Plate Grip DOL	1.15	TC	0.79	Vert(LL)	-0.08	4-7	>868	240	MT20	244/190
Snow (Pf)	20.0	Lumber DOL	1.15	BC	0.51	Vert(CT)	-0.15	4-7	>477	180		
TCDL	10.0	Rep Stress Incr	YES	WB	0.00	Horz(CT)	0.02	2	n/a	n/a		
BCLL	0.0*	Code	IRC2018/TPI2014	Matrix-MP								
BCDL	10.0										Weight: 24 lb	FT = 20%

LUMBER
TOP CHORD 2x4 SP No.2
BOT CHORD 2x4 SP No.2
WEBS 2x4 SP No.3
WEDGE Left: 2x4 SP No.3

BRACING
TOP CHORD Structural wood sheathing directly applied or 5-11-0 oc purlins, except end verticals.
BOT CHORD Rigid ceiling directly applied or 10-0-0 oc bracing.

MiTek recommends that Stabilizers and required cross bracing be installed during truss erection, in accordance with Stabilizer Installation guide.

REACTIONS (lb/size) 2=287/0-3-8, (min. 0-1-8), 4=709/Mechanical, (min. 0-1-8)
Max Horiz 2=107 (LC 13)
Max Uplift 2=-44 (LC 14), 4=-121 (LC 14)
Max Grav 2=381 (LC 21), 4=802 (LC 21)

FORCES (lb) - Max. Comp./Max. Ten. - All forces 250 (lb) or less except when shown.

NOTES
1) Wind: ASCE 7-16; Vult=130mph (3-second gust) Vasd=103mph; TCDL=6.0psf; BCDL=6.0psf; h=25ft; Cat. II; Exp B; Enclosed; MWFRS (envelope) exterior zone and C-C Exterior(2E) zone; cantilever left and right exposed ; end vertical left and right exposed;C-C for members and forces & MWFRS for reactions shown; Lumber DOL=1.60 plate grip DOL=1.60
2) TCLL: ASCE 7-16; Pr=20.0 psf (roof LL: Lum DOL=1.15 Plate DOL=1.15); Pf=20.0 psf (Lum DOL=1.15 Plate DOL=1.15); Is=1.0; Rough Cat B; Fully Exp.; Ce=0.9; Cs=1.00; Ct=1.10
3) Unbalanced snow loads have been considered for this design.
4) This truss has been designed for greater of min roof live load of 12.0 psf or 1.00 times flat roof load of 20.0 psf on overhangs non-concurrent with other live loads.
5) This truss has been designed for a 10.0 psf bottom chord live load nonconcurrent with any other live loads.
6) * This truss has been designed for a live load of 20.0psf on the bottom chord in all areas where a rectangle 3-06-00 tall by 2-00-00 wide will fit between the bottom chord and any other members.
7) Refer to girder(s) for truss to truss connections.
8) Provide mechanical connection (by others) of truss to bearing plate capable of withstanding 121 lb uplift at joint 4.
9) One H2.5A Simpson Strong-Tie connectors recommended to connect truss to bearing walls due to UPLIFT at jt(s) 2. This connection is for uplift only and does not consider lateral forces.
10) This truss is designed in accordance with the 2018 International Residential Code sections R502.11.1 and R802.10.2 and referenced standard ANSI/TPI 1.
11) Hanger(s) or other connection device(s) shall be provided sufficient to support concentrated load(s) 482 lb down and 75 lb up at 5-9-4 on bottom chord. The design/selection of such connection device(s) is the responsibility of others.
12) In the LOAD CASE(S) section, loads applied to the face of the truss are noted as front (F) or back (B).

LOAD CASE(S) Standard
1) Dead + Snow (balanced): Lumber Increase=1.15, Plate Increase=1.15
Uniform Loads (lb/ft)
Vert: 1-3=-60, 4-5=-20
Concentrated Loads (lb)
Vert: 4=-482 (B)

Job	Truss	Truss Type	Qty	Ply	Lincoln A GRH-2nd Floor-Lincoln A GRH
24050001-B	T19	Monopitch	2	1	Job Reference (optional)

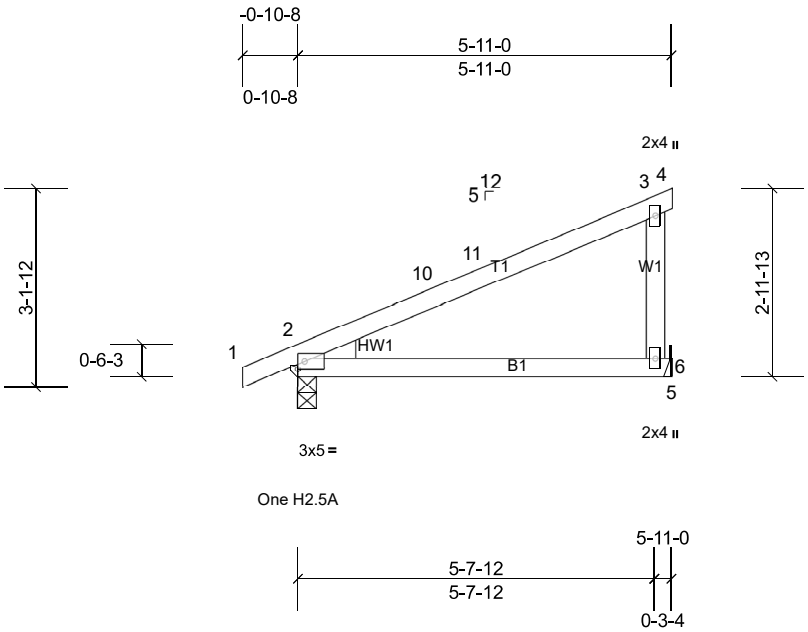

Scale = 1:36.5

Loading	(psf)	Spacing	2-0-0	CSI		DEFL	in	(loc)	l/defl	L/d	PLATES	GRIP
TCLL (roof)	20.0	Plate Grip DOL	1.15	TC	0.75	Vert(LL)	-0.07	6-9	>932	240	MT20	244/190
Snow (Pf)	20.0	Lumber DOL	1.15	BC	0.48	Vert(CT)	-0.13	6-9	>512	180		
TCDL	10.0	Rep Stress Incr	YES	WB	0.00	Horz(CT)	0.02	2	n/a	n/a		
BCLL	0.0*	Code	IRC2018/TPI2014	Matrix-MP								
BCDL	10.0										Weight: 24 lb	FT = 20%

LUMBER
TOP CHORD 2x4 SP No.2
BOT CHORD 2x4 SP No.2
WEBS 2x4 SP No.3
WEDGE Left: 2x4 SP No.3

BRACING
TOP CHORD Structural wood sheathing directly applied or 5-11-0 oc purlins, except end verticals.
BOT CHORD Rigid ceiling directly applied or 10-0-0 oc bracing.

MiTek recommends that Stabilizers and required cross bracing be installed during truss erection, in accordance with Stabilizer Installation guide.

REACTIONS (lb/size) 2=282/0-3-8, (min. 0-1-8), 6=244/Mechanical, (min. 0-1-8)
Max Horiz 2=107 (LC 13)
Max Uplift 2=-42 (LC 14), 6=-49 (LC 14)
Max Grav 2=373 (LC 21), 6=344 (LC 21)

FORCES (lb) - Max. Comp./Max. Ten. - All forces 250 (lb) or less except when shown.
TOP CHORD 3-6=-255/116

NOTES
1) Wind: ASCE 7-16; Vult=130mph (3-second gust) Vasd=103mph; TCDL=6.0psf; BCDL=6.0psf; h=25ft; Cat. II; Exp B; Enclosed; MWFRS (envelope) exterior zone and C-C Exterior(2E) -0-10-8 to 2-1-8, Interior (1) 2-1-8 to 2-11-0, Exterior(2E) 2-11-0 to 5-11-0 zone; cantilever left and right exposed ; end vertical left and right exposed;C-C for members and forces & MWFRS for reactions shown; Lumber DOL=1.60 plate grip DOL=1.60
2) TCLL: ASCE 7-16; Pr=20.0 psf (roof LL: Lum DOL=1.15 Plate DOL=1.15); Pf=20.0 psf (Lum DOL=1.15 Plate DOL=1.15); Is=1.0; Rough Cat B; Fully Exp.; Ce=0.9; Cs=1.00; Ct=1.10
3) Unbalanced snow loads have been considered for this design.
4) This truss has been designed for greater of min roof live load of 12.0 psf or 1.00 times flat roof load of 20.0 psf on overhangs non-concurrent with other live loads.
5) This truss has been designed for a 10.0 psf bottom chord live load nonconcurrent with any other live loads.
6) * This truss has been designed for a live load of 20.0psf on the bottom chord in all areas where a rectangle 3-06-00 tall by 2-00-00 wide will fit between the bottom chord and any other members.
7) Refer to girder(s) for truss to truss connections.
8) Provide mechanical connection (by others) of truss to bearing plate capable of withstanding 49 lb uplift at joint 6.
9) One H2.5A Simpson Strong-Tie connectors recommended to connect truss to bearing walls due to UPLIFT at jt(s) 2. This connection is for uplift only and does not consider lateral forces.
10) This truss is designed in accordance with the 2018 International Residential Code sections R502.11.1 and R802.10.2 and referenced standard ANSI/TPI 1.

LOAD CASE(S) Standard

Job	Truss	Truss Type	Qty	Ply	Lincoln A GRH-2nd Floor-Lincoln A GRH
24050001-B	T20	Hip Girder	1	2	Job Reference (optional)

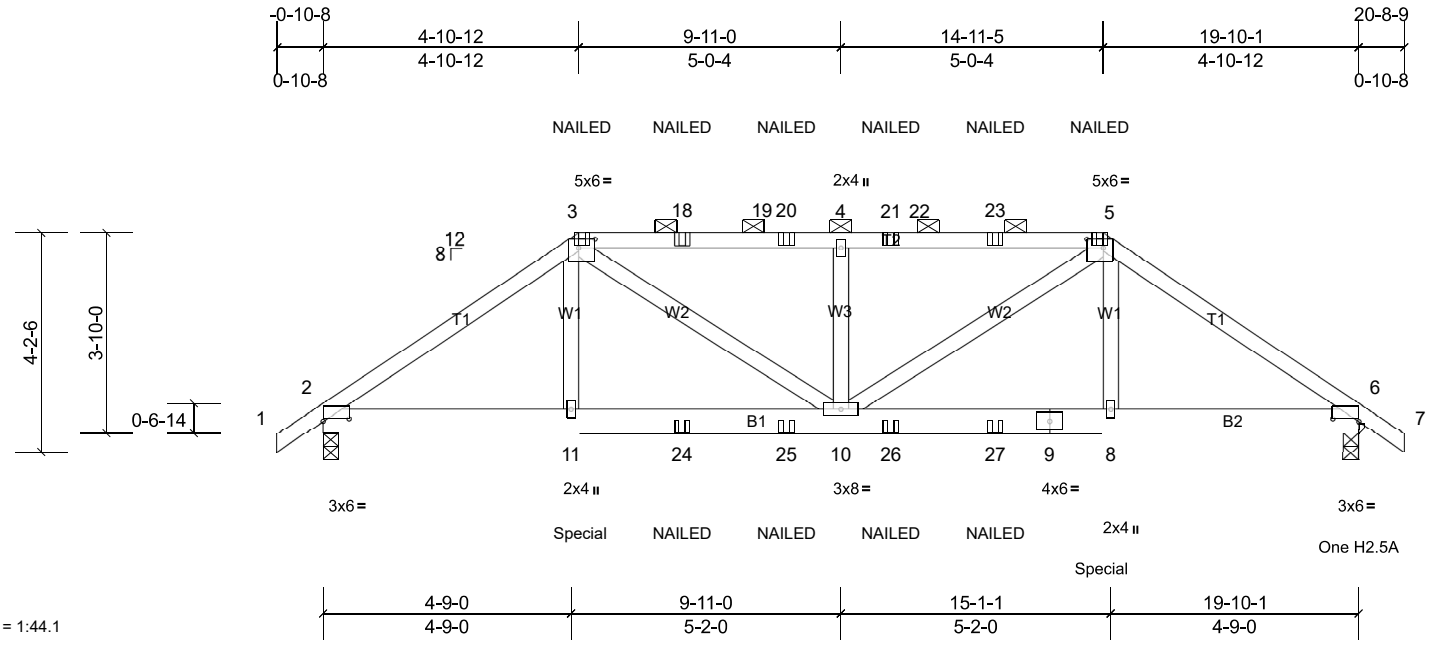

Plate Offsets (X, Y): [2:0-6-0,0-0-11], [3:0-3-12,0-2-0], [5:0-3-12,0-2-0], [6:0-6-0,0-0-11]

Loading	(psf)	Spacing	2-0-0	CSI		DEFL	in	(loc)	l/defl	L/d	PLATES	GRIP
TCLL (roof)	20.0	Plate Grip DOL	1.15	TC	0.51	Vert(LL)	-0.06	10	>999	240	MT20	244/190
Snow (Pf)	20.0	Lumber DOL	1.15	BC	0.35	Vert(CT)	-0.09	10-11	>999	180		
TCDL	10.0	Rep Stress Incr	NO	WB	0.22	Horz(CT)	0.02	6	n/a	n/a		
BCLL	0.0*	Code	IRC2018/TPI2014	Matrix-MSH								
BCDL	10.0										Weight: 226 lb	FT = 20%

LUMBER
TOP CHORD 2x4 SP No.2
BOT CHORD 2x6 SP No.2
WEBS 2x4 SP No.3

BRACING
TOP CHORD Structural wood sheathing directly applied or 6-0-0 oc purlins, except 2-0-0 oc purlins (6-0-0 max.): 3-5.
BOT CHORD Rigid ceiling directly applied or 10-0-0 oc bracing.

REACTIONS (lb/size) 2=1832/0-3-8, (min. 0-1-8), 6=1828/0-3-8, (min. 0-1-8)
Max Horiz 2=-91 (LC 10)
Max Uplift 2=-309 (LC 12), 6=-308 (LC 13)
Max Grav 2=1936 (LC 37), 6=1932 (LC 37)

FORCES (lb) - Max. Comp./Max. Ten. - All forces 250 (lb) or less except when shown.
TOP CHORD 2-3=-2838/472, 3-18=-3111/516, 18-19=-3111/516, 19-20=-3111/516, 4-20=-3111/516, 4-21=-3111/516, 21-22=-3111/516, 22-23=-3111/516, 5-23=-3111/516, 5-6=-2831/472
BOT CHORD 2-11=-369/2283, 11-24=-370/2262, 24-25=-370/2262, 10-25=-370/2262, 10-26=-305/2257, 26-27=-305/2257, 9-27=-305/2257, 8-9=-305/2257, 6-8=-303/2278
WEBS 3-11=-1/523, 3-10=-214/1034, 4-10=-867/305, 5-10=-215/1039, 5-8=-2/522

NOTES
1) 2-ply truss to be connected together with 10d (0.131"x3") nails as follows:
Top chords connected as follows: 2x4 - 1 row at 0-9-0 oc.
Bottom chords connected as follows: 2x6 - 2 rows staggered at 0-9-0 oc.
Web connected as follows: 2x4 - 1 row at 0-9-0 oc.
2) All loads are considered equally applied to all plies, except if noted as front (F) or back (B) face in the LOAD CASE(S) section. Ply to ply connections have been provided to distribute only loads noted as (F) or (B), unless otherwise indicated.
3) Unbalanced roof live loads have been considered for this design.
4) Wind: ASCE 7-16; Vult=130mph (3-second gust) Vasd=103mph; TCDL=6.0psf; BCDL=6.0psf; h=25ft; Cat. II; Exp B; Enclosed; MWFRS (envelope) exterior zone; cantilever left and right exposed ; end vertical left and right exposed; Lumber DOL=1.60 plate grip DOL=1.60
5) TCLL: ASCE 7-16; Pr=20.0 psf (roof LL: Lum DOL=1.15 Plate DOL=1.15); Pf=20.0 psf (Lum DOL=1.15 Plate DOL=1.15); Is=1.0; Rough Cat B; Fully Exp.; Ce=0.9; Cs=1.00; Ct=1.10
6) Unbalanced snow loads have been considered for this design.
7) This truss has been designed for greater of min roof live load of 12.0 psf or 1.00 times flat roof load of 20.0 psf on overhangs non-concurrent with other live loads.
8) Provide adequate drainage to prevent water ponding.
9) This truss has been designed for a 10.0 psf bottom chord live load nonconcurrent with any other live loads.
10) * This truss has been designed for a live load of 20.0psf on the bottom chord in all areas where a rectangle 3-06-00 tall by 2-00-00 wide will fit between the bottom chord and any other members.
11) One H2.5A Simpson Strong-Tie connectors recommended to connect truss to bearing walls due to UPLIFT at jt(s) 2 and 6. This connection is for uplift only and does not consider lateral forces.
12) This truss is designed in accordance with the 2018 International Residential Code sections R502.11.1 and R802.10.2 and referenced standard ANSI/TPI 1.
13) Graphical purlin representation does not depict the size or the orientation of the purlin along the top and/or bottom chord.
14) "NAILED" indicates 3-10d (0.148"x3") or 3-12d (0.148"x3.25") toe-nails per NDS guidlines.
15) Hanger(s) or other connection device(s) shall be provided sufficient to support concentrated load(s) 423 lb down and 64 lb up at 4-10-12, and 423 lb down and 64 lb up at 14-10-9 on bottom chord. The design/selection of such connection device(s) is the responsibility of others.

LOAD CASE(S) Standard
1) Dead + Snow (balanced): Lumber Increase=1.15, Plate Increase=1.15
Uniform Loads (lb/ft)
Vert: 1-3=-60, 3-5=-60, 5-7=-60, 12-15=-20
Concentrated Loads (lb)
Vert: 5=-146 (B), 11=-423 (B), 3=-146 (B), 8=-423 (B), 18=-146 (B), 20=-146 (B), 21=-146 (B), 23=-146 (B), 24=-62 (B), 25=-62 (B), 26=-62 (B), 27=-62 (B)

Job	Truss	Truss Type	Qty	Ply	Lincoln A GRH-2nd Floor-Lincoln A GRH
24050001-B	T21	Hip	1	1	Job Reference (optional)

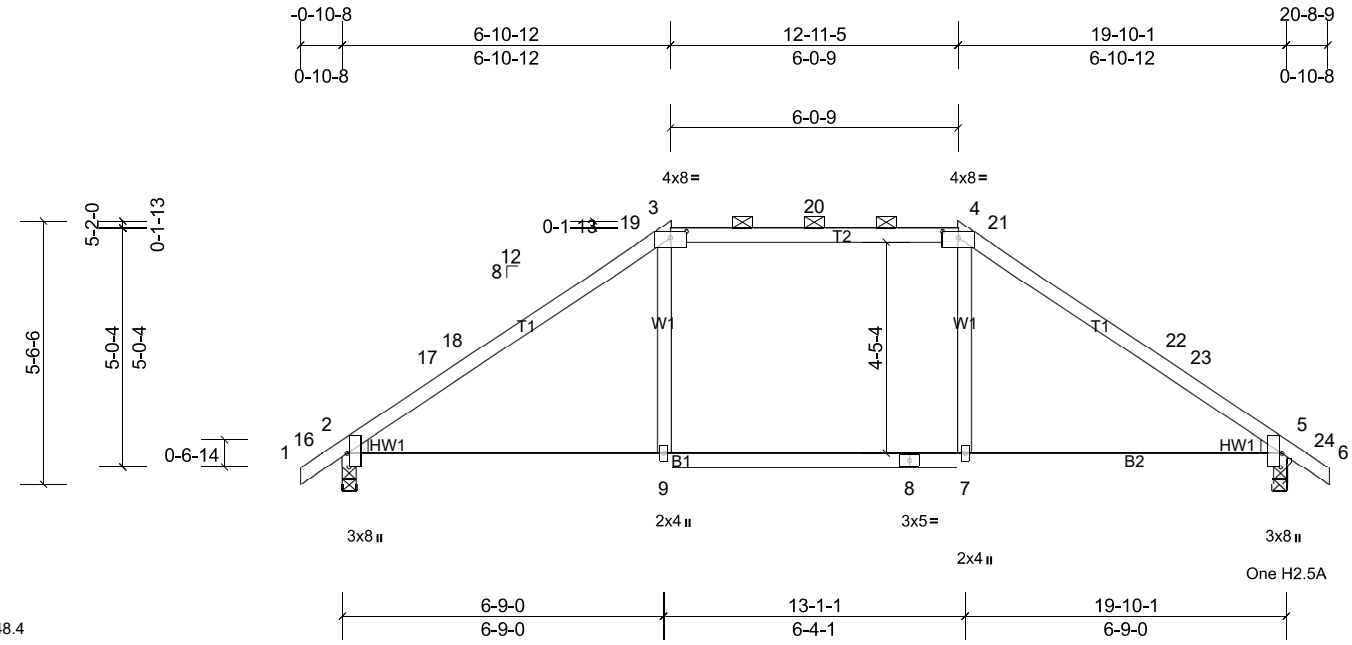

Scale = 1:48.4

Plate Offsets (X, Y): [2:0-3-8,Edge], [3:0-4-0,0-1-9], [4:0-4-0,0-1-9], [5:0-3-8,Edge]

Loading	(psf)	Spacing	2-0-0	CSI		DEFL	in	(loc)	l/defl	L/d	PLATES	GRIP
TCLL (roof)	20.0	Plate Grip DOL	1.15	TC	0.95	Vert(LL)	-0.38	7-12	>625	240	MT20	244/190
Snow (Pf)	20.0	Lumber DOL	1.15	BC	0.82	Vert(CT)	-0.43	7-12	>556	180		
TCDL	10.0	Rep Stress Incr	YES	WB	0.14	Horz(CT)	0.04	2	n/a	n/a		
BCLL	0.0*	Code	IRC2018/TPI2014	Matrix-MSH								
BCDL	10.0										Weight: 82 lb	FT = 20%

LUMBER
TOP CHORD 2x4 SP No.1 *Except* T2:2x4 SP No.2
BOT CHORD 2x4 SP No.2
WEBS 2x4 SP No.3
WEDGE Left: 2x4 SP No.3
Right: 2x4 SP No.3

BRACING
TOP CHORD Structural wood sheathing directly applied or 2-10-13 oc purlins, except 2-0-0 oc purlins (2-2-0 max.): 3-4.
BOT CHORD Rigid ceiling directly applied or 10-0-0 oc bracing.

MiTek recommends that Stabilizers and required cross bracing be installed during truss erection, in accordance with Stabilizer Installation guide.

REACTIONS (lb/size) 2=846/0-3-8, (min. 0-1-8), 5=846/0-3-8, (min. 0-1-8)
Max Horiz 2=120 (LC 13)
Max Uplift 2=-95 (LC 14), 5=-95 (LC 15)
Max Grav 2=1052 (LC 47), 5=1052 (LC 47)

FORCES (lb) - Max. Comp./Max. Ten. - All forces 250 (lb) or less except when shown.
TOP CHORD 2-17=-1409/119, 17-18=-1323/123, 18-19=-1276/148, 3-19=-1179/151, 3-20=-1079/179, 4-20=-1079/179, 4-21=-1179/151, 21-22=-1276/148, 22-23=-1323/123, 5-23=-1409/119
BOT CHORD 2-9=-80/1045, 8-9=-15/1035, 7-8=-15/1035, 5-7=-14/1045
WEBS 3-9=0/347, 4-7=0/347

NOTES
1) Unbalanced roof live loads have been considered for this design.
2) Wind: ASCE 7-16; Vult=130mph (3-second gust) Vasd=103mph; TCDL=6.0psf; BCDL=6.0psf; h=25ft; Cat. II; Exp B; Enclosed; MWFRS (envelope) exterior zone and C-C Exterior(2E) -0-10-8 to 2-1-8, Interior (1) 2-1-8 to 2-7-13, Exterior(2R) 2-7-13 to 17-2-3, Interior (1) 17-2-3 to 17-8-9, Exterior(2E) 17-8-9 to 20-8-9 zone; cantilever left and right exposed ; end vertical left and right exposed;C-C for members and forces & MWFRS for reactions shown; Lumber DOL=1.60 plate grip DOL=1.60
3) TCLL: ASCE 7-16; Pr=20.0 psf (roof LL: Lum DOL=1.15 Plate DOL=1.15); Pf=20.0 psf (Lum DOL=1.15 Plate DOL=1.15); Is=1.0; Rough Cat B; Fully Exp.; Ce=0.9; Cs=1.00; Ct=1.10
4) Unbalanced snow loads have been considered for this design.
5) This truss has been designed for greater of min roof live load of 12.0 psf or 1.00 times flat roof load of 20.0 psf on overhangs non-concurrent with other live loads.
6) Provide adequate drainage to prevent water ponding.
7) This truss has been designed for a 10.0 psf bottom chord live load nonconcurrent with any other live loads.
8) * This truss has been designed for a live load of 20.0psf on the bottom chord in all areas where a rectangle 3-06-00 tall by 2-00-00 wide will fit between the bottom chord and any other members, with BCDL = 10.0psf.
9) One H2.5A Simpson Strong-Tie connectors recommended to connect truss to bearing walls due to UPLIFT at jt(s) 5 and 2. This connection is for uplift only and does not consider lateral forces.
10) This truss is designed in accordance with the 2018 International Residential Code sections R502.11.1 and R802.10.2 and referenced standard ANSI/TPI 1.
11) Graphical purlin representation does not depict the size or the orientation of the purlin along the top and/or bottom chord.

LOAD CASE(S) Standard

Job	Truss	Truss Type	Qty	Ply	Lincoln A GRH-2nd Floor-Lincoln A GRH
24050001-B	T22	Hip	1	1	Job Reference (optional)

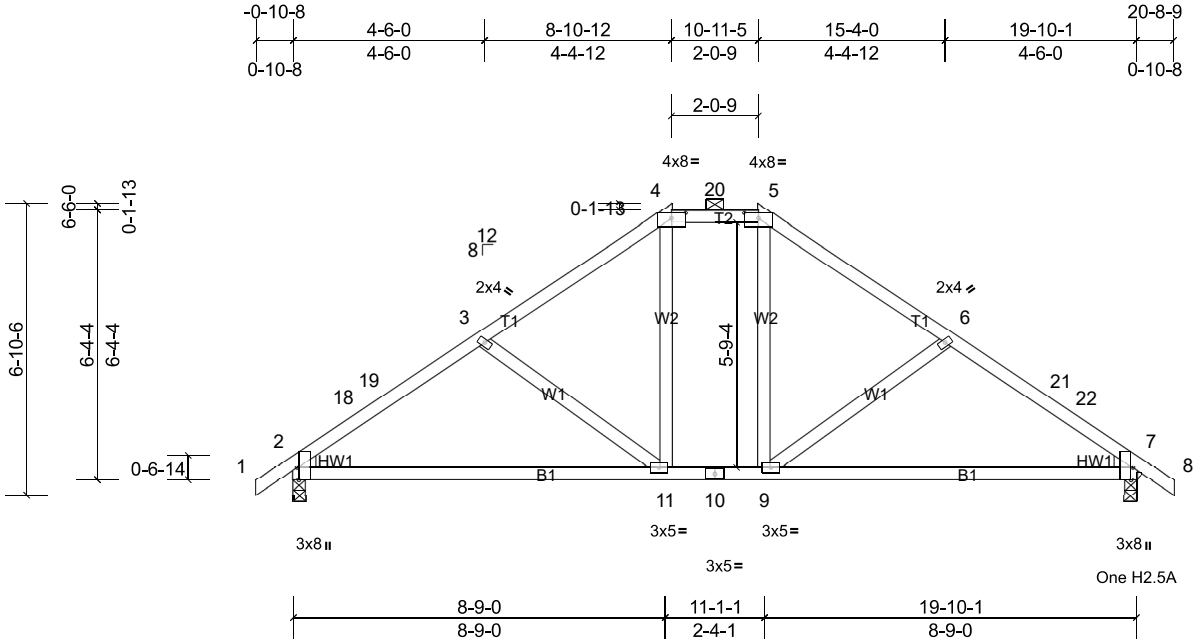

Scale = 1:54.2

Plate Offsets (X, Y): [2:0-3-8,Edge], [4:0-4-0,0-1-9], [5:0-4-0,0-1-9], [7:0-3-8,Edge]

Loading	(psf)	Spacing	2-0-0	CSI		DEFL	in	(loc)	l/defl	L/d	PLATES	GRIP
TCLL (roof)	20.0	Plate Grip DOL	1.15	TC	0.41	Vert(LL)	-0.15	11-14	>999	240	MT20	244/190
Snow (Pf)	20.0	Lumber DOL	1.15	BC	0.70	Vert(CT)	-0.26	11-14	>930	180		
TCDL	10.0	Rep Stress Incr	YES	WB	0.22	Horz(CT)	0.03	7	n/a	n/a		
BCLL	0.0*	Code	IRC2018/TPI2014	Matrix-MSH								
BCDL	10.0										Weight: 102 lb	FT = 20%

LUMBER

TOP CHORD 2x4 SP No.2
BOT CHORD 2x4 SP No.2
WEBS 2x4 SP No.3
WEDGE Left: 2x4 SP No.3
Right: 2x4 SP No.3

BRACING

TOP CHORD Structural wood sheathing directly applied or 4-8-1 oc purlins, except 2-0-0 oc purlins (5-10-15 max.): 4-5.
BOT CHORD Rigid ceiling directly applied or 10-0-0 oc bracing.

MiTek recommends that Stabilizers and required cross bracing be installed during truss erection, in accordance with Stabilizer Installation guide.

REACTIONS (lb/size) 2=846/0-3-8, (min. 0-1-8), 7=846/0-3-8, (min. 0-1-8)
Max Horiz 2=-151 (LC 12)
Max Uplift 2=-89 (LC 14), 7=-89 (LC 15)
Max Grav 2=1086 (LC 51), 7=1086 (LC 53)

FORCES (lb) - Max. Comp./Max. Ten. - All forces 250 (lb) or less except when shown.
TOP CHORD 2-18=-1527/136, 18-19=-1491/140, 3-19=-1408/159, 3-4=-1258/149, 4-20=-972/162, 5-20=-972/162, 5-6=-1258/149, 6-21=-1408/159, 21-22=-1491/140, 7-22=-1527/136
BOT CHORD 2-11=-127/1231, 10-11=0/914, 9-10=0/914, 7-9=-46/1231
WEBS 3-11=-397/171, 4-11=-4/421, 5-9=-4/421, 6-9=-397/171

NOTES

1) Unbalanced roof live loads have been considered for this design.
2) Wind: ASCE 7-16; Vult=130mph (3-second gust) Vasd=103mph; TCDL=6.0psf; BCDL=6.0psf; h=25ft; Cat. II; Exp B; Enclosed; MWFRS (envelope) exterior zone and C-C Exterior(2E) -0-10-8 to 2-1-8, Interior (1) 2-1-8 to 4-4-8, Exterior(2R) 4-4-8 to 15-5-9, Interior (1) 15-5-9 to 17-8-9, Exterior(2E) 17-8-9 to 20-8-9 zone; cantilever left and right exposed ; end vertical left and right exposed;C-C for members and forces & MWFRS for reactions shown; Lumber DOL=1.60 plate grip DOL=1.60
3) TCLL: ASCE 7-16; Pr=20.0 psf (roof LL: Lum DOL=1.15 Plate DOL=1.15); Pf=20.0 psf (Lum DOL=1.15 Plate DOL=1.15); Is=1.0; Rough Cat B; Fully Exp.; Ce=0.9; Cs=1.00; Ct=1.10
4) Unbalanced snow loads have been considered for this design.
5) This truss has been designed for greater of min roof live load of 12.0 psf or 1.00 times flat roof load of 20.0 psf on overhangs non-concurrent with other live loads.
6) Provide adequate drainage to prevent water ponding.
7) This truss has been designed for a 10.0 psf bottom chord live load nonconcurrent with any other live loads.
8) * This truss has been designed for a live load of 20.0psf on the bottom chord in all areas where a rectangle 3-06-00 tall by 2-00-00 wide will fit between the bottom chord and any other members, with BCDL = 10.0psf.
9) One H2.5A Simpson Strong-Tie connectors recommended to connect truss to bearing walls due to UPLIFT at jt(s) 2 and 7. This connection is for uplift only and does not consider lateral forces.
10) This truss is designed in accordance with the 2018 International Residential Code sections R502.11.1 and R802.10.2 and referenced standard ANSI/TPI 1.
11) Graphical purlin representation does not depict the size or the orientation of the purlin along the top and/or bottom chord.

LOAD CASE(S) Standard

Job	Truss	Truss Type	Qty	Ply	Lincoln A GRH-2nd Floor-Lincoln A GRH
24050001-B	T23	Common	1	1	Job Reference (optional)

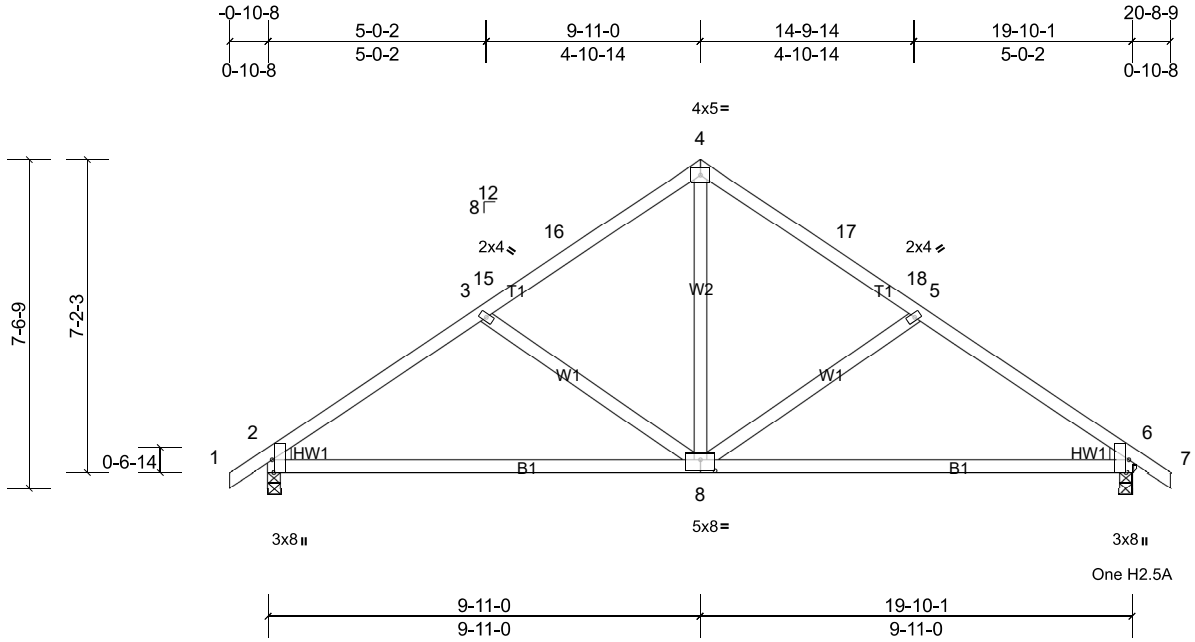

Scale = 1:52.9

Plate Offsets (X, Y): [2:0-3-8,Edge], [6:0-3-8,Edge], [8:0-4-0,0-3-0]

Loading	(psf)	Spacing	2-0-0	CSI		DEFL	in	(loc)	l/defl	L/d	PLATES	GRIP
TCLL (roof)	20.0	Plate Grip DOL	1.15	TC	0.49	Vert(LL)	-0.14	8-14	>999	240	MT20	244/190
Snow (Pf)	20.0	Lumber DOL	1.15	BC	0.83	Vert(CT)	-0.28	8-14	>852	180		
TCDL	10.0	Rep Stress Incr	YES	WB	0.28	Horz(CT)	0.02	6	n/a	n/a		
BCLL	0.0*	Code	IRC2018/TPI2014	Matrix-MSH								
BCDL	10.0										Weight: 97 lb	FT = 20%

LUMBER

TOP CHORD 2x4 SP No.2
BOT CHORD 2x4 SP No.2
WEBS 2x4 SP No.3
WEDGE Left: 2x4 SP No.3
Right: 2x4 SP No.3

BRACING

TOP CHORD Structural wood sheathing directly applied or 4-11-11 oc purlins.
BOT CHORD Rigid ceiling directly applied or 10-0-0 oc bracing.

MiTek recommends that Stabilizers and required cross bracing be installed during truss erection, in accordance with Stabilizer Installation guide.

REACTIONS (lb/size) 2=846/0-3-8, (min. 0-1-8), 6=846/0-3-8, (min. 0-1-8)
Max Horiz 2=169 (LC 13)
Max Uplift 2=-85 (LC 14), 6=-85 (LC 15)
Max Grav 2=894 (LC 21), 6=894 (LC 22)

FORCES (lb) - Max. Comp./Max. Ten. - All forces 250 (lb) or less except when shown.
TOP CHORD 2-3=-1164/148, 3-15=-884/101, 15-16=-872/115, 4-16=-808/135, 4-17=-808/135, 17-18=-872/115, 5-18=-884/101, 5-6=-1164/148
BOT CHORD 2-8=-127/927, 6-8=-30/927
WEBS 4-8=-24/600, 5-8=-386/184, 3-8=-386/184

NOTES

1) Unbalanced roof live loads have been considered for this design.
2) Wind: ASCE 7-16; Vult=130mph (3-second gust) Vasd=103mph; TCDL=6.0psf; BCDL=6.0psf; h=25ft; Cat. II; Exp B; Enclosed; MWFRS (envelope) exterior zone and C-C Exterior(2E) -0-10-8 to 2-1-8, Interior (1) 2-1-8 to 6-11-0, Exterior(2R) 6-11-0 to 12-11-0, Interior (1) 12-11-0 to 17-8-9, Exterior(2E) 17-8-9 to 20-8-9 zone; cantilever left and right exposed ; end vertical left and right exposed;C-C for members and forces & MWFRS for reactions shown; Lumber DOL=1.60 plate grip DOL=1.60
3) TCLL: ASCE 7-16; Pr=20.0 psf (roof LL: Lum DOL=1.15 Plate DOL=1.15); Pf=20.0 psf (Lum DOL=1.15 Plate DOL=1.15); Is=1.0; Rough Cat B; Fully Exp.; Ce=0.9; Cs=1.00; Ct=1.10
4) Unbalanced snow loads have been considered for this design.
5) This truss has been designed for greater of min roof live load of 12.0 psf or 1.00 times flat roof load of 20.0 psf on overhangs non-concurrent with other live loads.
6) This truss has been designed for a 10.0 psf bottom chord live load nonconcurrent with any other live loads.
7) * This truss has been designed for a live load of 20.0psf on the bottom chord in all areas where a rectangle 3-06-00 tall by 2-00-00 wide will fit between the bottom chord and any other members.
8) One H2.5A Simpson Strong-Tie connectors recommended to connect truss to bearing walls due to UPLIFT at jt(s) 2 and 6. This connection is for uplift only and does not consider lateral forces.
9) This truss is designed in accordance with the 2018 International Residential Code sections R502.11.1 and R802.10.2 and referenced standard ANSI/TPI 1.

LOAD CASE(S) Standard

Job	Truss	Truss Type	Qty	Ply	Lincoln A GRH-2nd Floor-Lincoln A GRH
24050001-B	T24	Monopitch	5	1	Job Reference (optional)

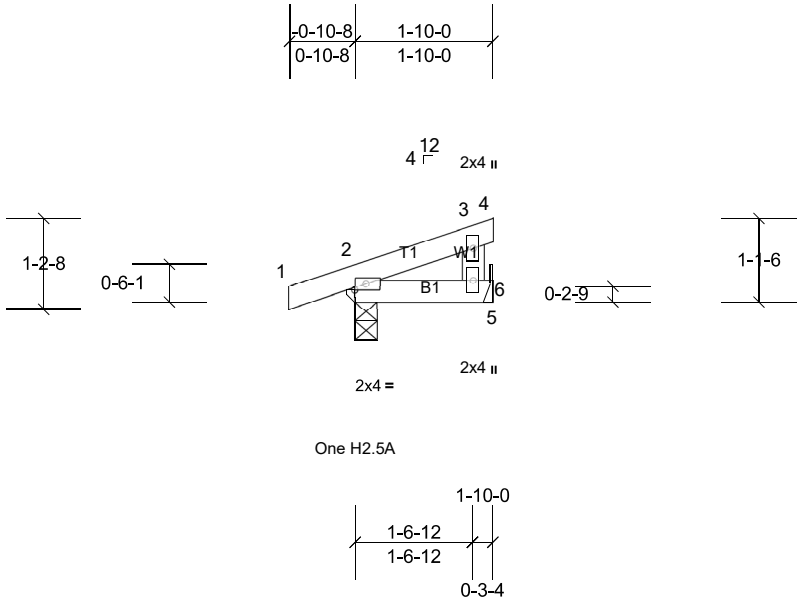

Scale = 1:30.7

Loading	(psf)	Spacing	2-0-0	CSI		DEFL	in	(loc)	l/defl	L/d	PLATES	GRIP
TCLL (roof)	20.0	Plate Grip DOL	1.15	TC	0.07	Vert(LL)	0.00	6-9	>999	240	MT20	244/190
Snow (Pf)	20.0	Lumber DOL	1.15	BC	0.04	Vert(CT)	0.00	6-9	>999	180		
TCDL	10.0	Rep Stress Incr	YES	WB	0.00	Horz(CT)	0.00	2	n/a	n/a		
BCLL	0.0*	Code	IRC2018/TPI2014	Matrix-MP								
BCDL	10.0										Weight: 8 lb	FT = 20%

LUMBER
TOP CHORD 2x4 SP No.2
BOT CHORD 2x4 SP No.2
WEBS 2x4 SP No.3

BRACING
TOP CHORD Structural wood sheathing directly applied or 1-10-0 oc purlins, except end verticals.
BOT CHORD Rigid ceiling directly applied or 10-0-0 oc bracing.

MiTek recommends that Stabilizers and required cross bracing be installed during truss erection, in accordance with Stabilizer Installation guide.

REACTIONS (lb/size) 2=138/0-3-8, (min. 0-1-8), 5=61/Mechanical, (min. 0-1-8)
Max Horiz 2=34 (LC 13)
Max Uplift 2=-48 (LC 10), 5=-10 (LC 14)
Max Grav 2=181 (LC 21), 5=76 (LC 21)

FORCES (lb) - Max. Comp./Max. Ten. - All forces 250 (lb) or less except when shown.

NOTES
1) Wind: ASCE 7-16; Vult=130mph (3-second gust) Vasd=103mph; TCDL=6.0psf; BCDL=6.0psf; h=25ft; Cat. II; Exp B; Enclosed; MWFRS (envelope) exterior zone and C-C Exterior(2E) zone; cantilever left and right exposed ; end vertical left and right exposed;C-C for members and forces & MWFRS for reactions shown; Lumber DOL=1.60 plate grip DOL=1.60
2) TCLL: ASCE 7-16; Pr=20.0 psf (roof LL: Lum DOL=1.15 Plate DOL=1.15); Pf=20.0 psf (Lum DOL=1.15 Plate DOL=1.15); Is=1.0; Rough Cat B; Fully Exp.; Ce=0.9; Cs=1.00; Ct=1.10
3) Unbalanced snow loads have been considered for this design.
4) This truss has been designed for greater of min roof live load of 12.0 psf or 1.00 times flat roof load of 20.0 psf on overhangs non-concurrent with other live loads.
5) This truss has been designed for a 10.0 psf bottom chord live load nonconcurrent with any other live loads.
6) * This truss has been designed for a live load of 20.0psf on the bottom chord in all areas where a rectangle 3-06-00 tall by 2-00-00 wide will fit between the bottom chord and any other members.
7) Refer to girder(s) for truss to truss connections.
8) Provide mechanical connection (by others) of truss to bearing plate capable of withstanding 10 lb uplift at joint 5.
9) One H2.5A Simpson Strong-Tie connectors recommended to connect truss to bearing walls due to UPLIFT at jt(s) 2. This connection is for uplift only and does not consider lateral forces.
10) This truss is designed in accordance with the 2018 International Residential Code sections R502.11.1 and R802.10.2 and referenced standard ANSI/TPI 1.

LOAD CASE(S) Standard

Job	Truss	Truss Type	Qty	Ply	Lincoln A GRH-2nd Floor-Lincoln A GRH
24050001-B	T25	Roof Special	1	1	Job Reference (optional)

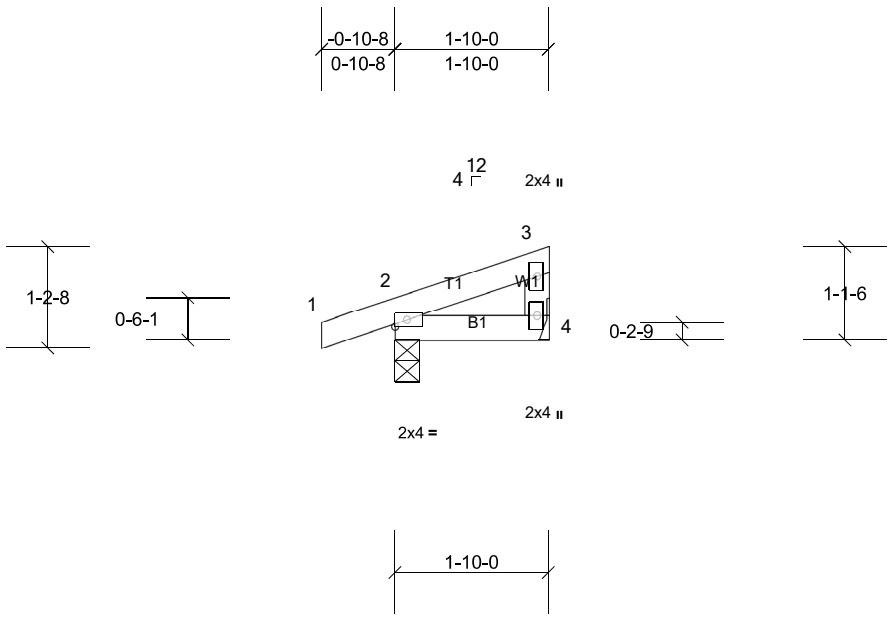

Scale = 1:27.5

Loading	(psf)	Spacing	2-0-0	CSI		DEFL	in	(loc)	l/defl	L/d	PLATES	GRIP
TCLL (roof)	20.0	Plate Grip DOL	1.15	TC	0.07	Vert(LL)	0.00	4-7	>999	240	MT20	244/190
Snow (Pf)	20.0	Lumber DOL	1.15	BC	0.02	Vert(CT)	0.00	4-7	>999	180		
TCDL	10.0	Rep Stress Incr	YES	WB	0.00	Horz(CT)	0.00	2	n/a	n/a		
BCLL	0.0*	Code	IRC2018/TPI2014	Matrix-MP								
BCDL	10.0										Weight: 8 lb	FT = 20%

LUMBER
TOP CHORD 2x4 SP No.2
BOT CHORD 2x4 SP No.2
WEBS 2x4 SP No.3

BRACING
TOP CHORD Structural wood sheathing directly applied or 1-10-0 oc purlins, except end verticals.
BOT CHORD Rigid ceiling directly applied or 10-0-0 oc bracing.

MiTek recommends that Stabilizers and required cross bracing be installed during truss erection, in accordance with Stabilizer Installation guide.

REACTIONS (lb/size) 2=134/0-3-8, (min. 0-1-8), 4=54/ Mechanical, (min. 0-1-8)
Max Horiz 2=33 (LC 13)
Max Uplift 2=-48 (LC 10), 4=-9 (LC 14)
Max Grav 2=174 (LC 21), 4=67 (LC 21)

FORCES (lb) - Max. Comp./Max. Ten. - All forces 250 (lb) or less except when shown.

NOTES
1) Wind: ASCE 7-16; Vult=130mph (3-second gust) Vasd=103mph; TCDL=6.0psf; BCDL=6.0psf; h=25ft; Cat. II; Exp B; Enclosed; MWFRS (envelope) exterior zone and C-C Exterior(2E) zone; cantilever left and right exposed ; end vertical left and right exposed;C-C for members and forces & MWFRS for reactions shown; Lumber DOL=1.60 plate grip DOL=1.60
2) TCLL: ASCE 7-16; Pr=20.0 psf (roof LL: Lum DOL=1.15 Plate DOL=1.15); Pf=20.0 psf (Lum DOL=1.15 Plate DOL=1.15); Is=1.0; Rough Cat B; Fully Exp.; Ce=0.9; Cs=1.00; Ct=1.10
3) Unbalanced snow loads have been considered for this design.
4) This truss has been designed for greater of min roof live load of 12.0 psf or 1.00 times flat roof load of 20.0 psf on overhangs non-concurrent with other live loads.
5) This truss has been designed for a 10.0 psf bottom chord live load nonconcurrent with any other live loads.
6) * This truss has been designed for a live load of 20.0psf on the bottom chord in all areas where a rectangle 3-06-00 tall by 2-00-00 wide will fit between the bottom chord and any other members.
7) Refer to girder(s) for truss to truss connections.
8) Provide mechanical connection (by others) of truss to bearing plate capable of withstanding 9 lb uplift at joint 4.
9) One H2.5A Simpson Strong-Tie connectors recommended to connect truss to bearing walls due to UPLIFT at jt(s) 2. This connection is for uplift only and does not consider lateral forces.
10) This truss is designed in accordance with the 2018 International Residential Code sections R502.11.1 and R802.10.2 and referenced standard ANSI/TPI 1.

LOAD CASE(S) Standard