Mark Morris, P.E.
#126, 1317-M, Summerville, SC 29483
843 209-5784, Fax (866)-213-4614

The truss drawing(s) listed below have been prepared by **Atlantic Building Components** under my direct supervision based on the parameters provided by the truss designers.

AST #: 44170
JOB: 24-0290-R01
JOB NAME: LOT 91 PROVIDENCE CREEK
Wind Code: 37
Wind Speed: Vult= 120mph
Exposure Category: B
Mean Roof Height (feet): 23
These truss designs comply with IRC 2015 as well as IRC 2018.
36 Truss Design(s)

Trusses:

J01, R01, R02, R03, R04, R05, R06, R07, R07A, R08, R09, R10, R12, R13, R14, R15, R16, R17, R18, R19, V01, V02, V03, V04, V05, V06, V07, V08, V09, V10, V11, V12, V13, V14, V15, V16

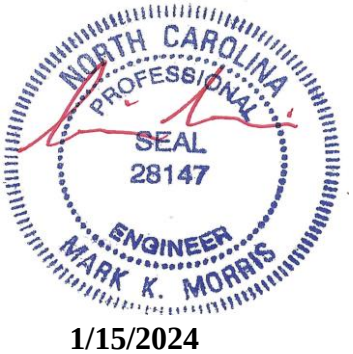

1/15/2024
Mark Morris

Warning !—Verify design parameters and read notes before use.

This design is based only upon parameters shown, and is for an individual building component to be installed and loaded vertically. Applicability of design parameters and proper incorporation of component is responsibility of building designer – not truss designer or truss engineer. Bracing shown is for lateral support of individual web members only. Additional temporary bracing to ensure stability during construction is the responsibility of the erector. Additional permanent bracing of the overall structure is the responsibility of the building designer. For general guidance regarding fabrication, quality control, storage, delivery, erection and bracing, consult ANSI/TPI 1 *National Design Standard for Metal Plate Connected Wood Truss Construction* and BCSI 1-03 Guide to *Good Practice for*

Job	Truss	Truss Type	Qty	Ply	LOT 91 PROVIDENCE CREEK | 59 DAVINHALL DRIVE FUQUAY-VARINA, NC
24-0290-R01	J01	Jack-Open	5	1	Job Reference (optional) **# 44170**

Run: 8.430 s Feb 12 2021 Print: 8.430 s Feb 12 2021 MiTek Industries, Inc. Tue Jan 16 14:50:32 2024 Page 1
ID:1EhuSslMpTbkFHTWLa5hq6ypz0?-ysFLFoomPYiqJPtzzCjr27CfBrKDUjseCWzXf0zum7r

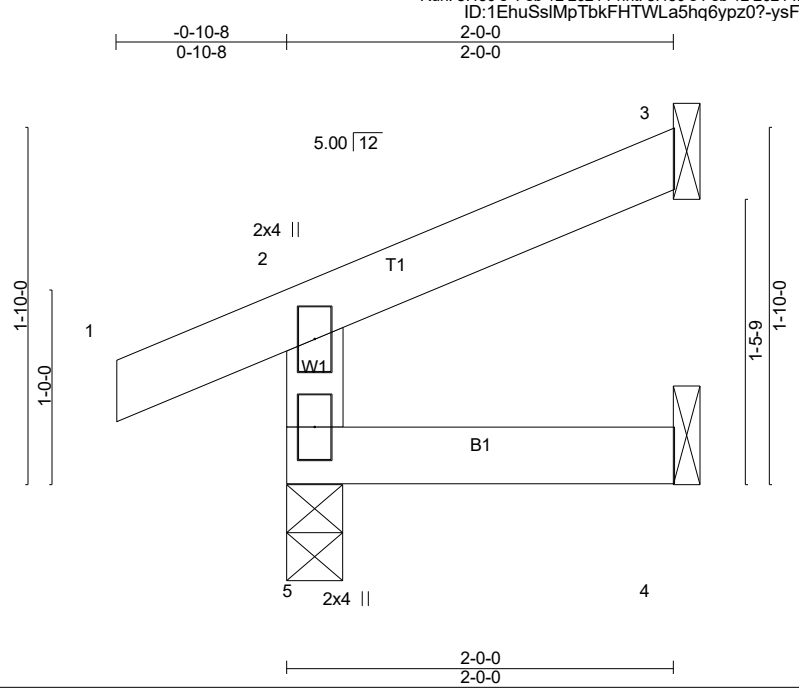

LOADING (psf)		**SPACING-** 2-0-0	**CSI.**		**DEFL.**	in	(loc)	l/defl	L/d	**PLATES**	**GRIP**
TCLL (roof)	20.0	Plate Grip DOL 1.15	TC	0.12	Vert(LL)	0.00	5	>999	240	MT20	244/190
Snow (Pf)	20.0	Lumber DOL 1.15	BC	0.06	Vert(CT)	-0.00	4-5	>999	180		
TCDL	10.0	Rep Stress Incr YES	WB	0.00	Horz(CT)	-0.00	3	n/a	n/a		
BCLL	0.0 *	Code IRC2021/TPI2014	Matrix-MR							Weight: 9 lb	FT = 20%
BCDL	10.0										

LUMBER-
TOP CHORD 2x4 SP No.2
BOT CHORD 2x4 SP No.2
WEBS 2x4 SP No.3

BRACING-
TOP CHORD Structural wood sheathing directly applied or 2-0-0 oc purlins, except end verticals.
BOT CHORD Rigid ceiling directly applied or 10-0-0 oc bracing.

MiTek recommends that Stabilizers and required cross bracing be installed during truss erection, in accordance with Stabilizer Installation guide.

REACTIONS. (lb/size) 5=152/0-3-8 (min. 0-1-8), 3=41/Mechanical, 4=16/Mechanical
Max Horz 5=34(LC 11)
Max Uplift5=-31(LC 10), 3=-23(LC 14), 4=-10(LC 11)
Max Grav 5=204(LC 21), 3=56(LC 21), 4=34(LC 7)

FORCES. (lb) - Max. Comp./Max. Ten. - All forces 250 (lb) or less except when shown.

NOTES- (9-12)
1) Wind: ASCE 7-16; Vult=120mph (3-second gust) Vasd=95mph; TCDL=5.0psf; BCDL=5.0psf; h=23ft; Cat. II; Exp B; Enclosed; MWFRS (envelope) gable end zone and C-C Exterior(2E) zone; cantilever left and right exposed ; end vertical left and right exposed; porch left exposed;C-C for members and forces & MWFRS for reactions shown; Lumber DOL=1.60 plate grip DOL=1.60
2) TCLL: ASCE 7-16; Pr=20.0 psf (roof LL: Lum DOL=1.15 Plate DOL=1.15); Pf=20.0 psf (Lum DOL=1.15 Plate DOL=1.15); Is=1.0; Rough Cat B; Partially Exp.; Ce=1.0; Cs=1.00; Ct=1.10
3) Unbalanced snow loads have been considered for this design.
4) This truss has been designed for greater of min roof live load of 12.0 psf or 2.00 times flat roof load of 20.0 psf on overhangs non-concurrent with other live loads.
5) This truss has been designed for a 10.0 psf bottom chord live load nonconcurrent with any other live loads.
6) * This truss has been designed for a live load of 30.0psf on the bottom chord in all areas where a rectangle 3-6-0 tall by 1-0-0 wide will fit between the bottom chord and any other members.
7) Refer to girder(s) for truss to truss connections.
8) Provide mechanical connection (by others) of truss to bearing plate capable of withstanding 100 lb uplift at joint(s) 5, 3, 4.
9) Graphical bracing representation does not depict the size, type or the orientation of the brace on the member. Symbol only indicates that the member must be braced.
10) Bearing symbols are only graphical representations of a possible bearing condition. Bearing symbols are not considered in the structural design of the truss to support the loads indicated.
11) Web bracing shown is for lateral support of individual web members only. Refer to BCSI - Guide to Good Practice for Handling, Installing, Restraining & Bracing of Metal Plate Connected Wood Trusses for additional bracing guidelines, including diagonal bracing.
12) SEE BCSI-B3 SUMMARY SHEET- PERMANENT RESTRAING/BRACING OF CHORDS & WEB MEMBERS FOR RECOMMENDED MINIMUM BRACING REQUIREMENTS OF TOP CHORD, BOTTOM CHORD, AND WEB PLANES. IN ADDITION TO THESE MINIMUM GUIDELINES, ALWAYS CONSULT THE PROJECT ARCHITECT OR ENGINEER FOR ADDITIONAL BRACING CONSIDERATIONS.

LOAD CASE(S) Standard

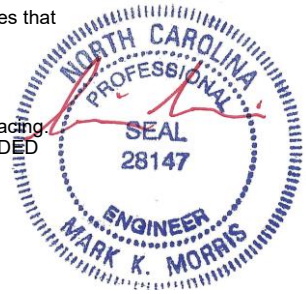

1/15/2024

Job	Truss	Truss Type	Qty	Ply	LOT 91 PROVIDENCE CREEK | 59 DAVINHALL DRIVE FUQUAY-VARINA, NC
24-0290-R01	R01	GABLE	1	1	Job Reference (optional) **# 44170**

Run: 8.430 s Feb 12 2021 Print: 8.430 s Feb 12 2021 MiTek Industries, Inc. Tue Jan 16 14:50:34 2024 Page 1
ID:1EhuSslMpTbkFHTWLa5hq6ypz0?-uFN5gTp0w9yYYi0M4dmJ8YH0nf06yaGwgqSekuzum7p

25-0-0 / 25-0-0 — 50-0-0 / 25-0-0 — 50-10-8 / 0-10-8

Scale = 1:83.0

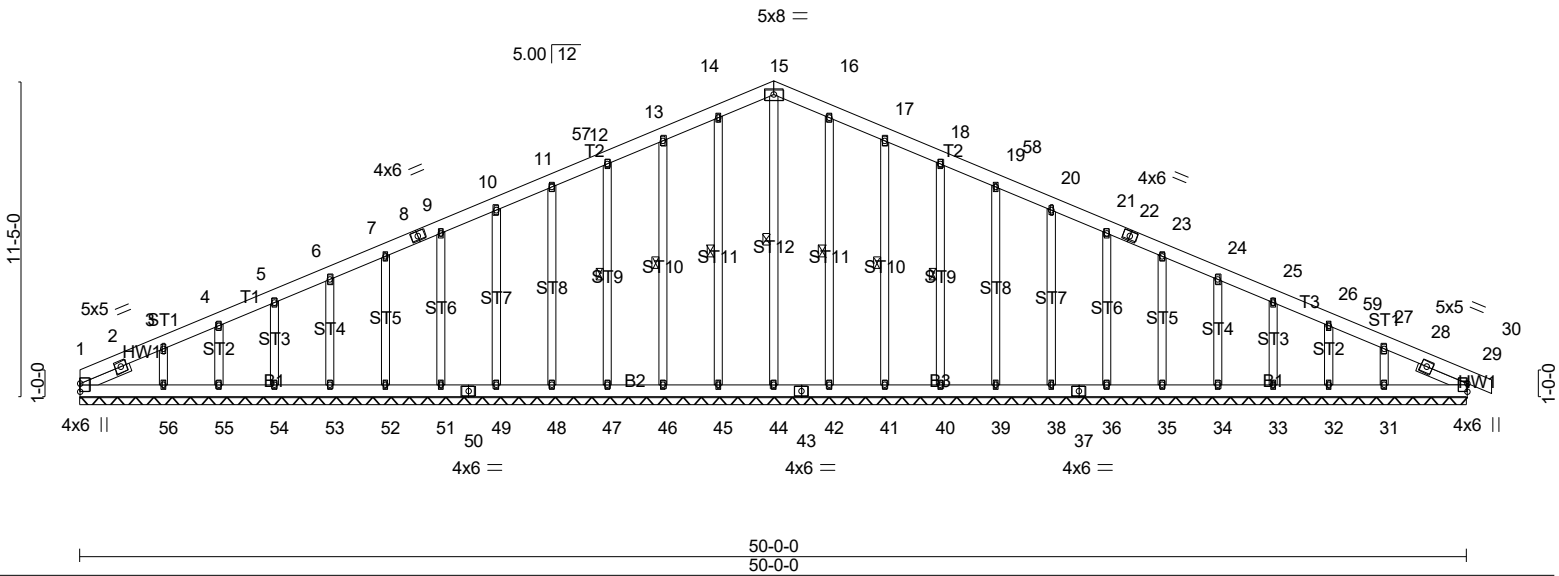

LOADING (psf)		SPACING- 2-0-0	CSI.		DEFL.	in	(loc)	l/defl	L/d	PLATES	GRIP
TCLL (roof)	20.0	Plate Grip DOL 1.15	TC	0.05	Vert(LL)	0.00	29	n/r	180	MT20	244/190
Snow (Pf)	20.0	Lumber DOL 1.15	BC	0.03	Vert(CT)	0.00	29	n/r	80		
TCDL	10.0	Rep Stress Incr YES	WB	0.13	Horz(CT)	0.01	29	n/a	n/a		
BCLL	0.0 *	Code IRC2021/TPI2014	Matrix-S							Weight: 448 lb	FT = 20%
BCDL	10.0										

LUMBER-
TOP CHORD 2x6 SP No.2
BOT CHORD 2x6 SP No.2
OTHERS 2x4 SP No.3
SLIDER Left 2x4 SP No.3 -° 1-11-0, Right 2x4 SP No.3 -° 1-11-0

BRACING-
TOP CHORD Structural wood sheathing directly applied or 6-0-0 oc purlins.
BOT CHORD Rigid ceiling directly applied or 10-0-0 oc bracing.
WEBS 1 Row at midpt 15-44, 14-45, 13-46, 12-47, 16-42, 17-41, 18-40

MiTek recommends that Stabilizers and required cross bracing be installed during truss erection, in accordance with Stabilizer Installation guide.

REACTIONS. All bearings 50-0-0.
(lb) - Max Horz 1=146(LC 14)
Max Uplift All uplift 100 lb or less at joint(s) 1, 45, 46, 47, 48, 49, 51, 52, 53, 54, 55, 56, 42, 41, 40, 39, 38, 36, 35, 34, 33, 32, 31
Max Grav All reactions 250 lb or less at joint(s) 1, 29, 48, 49, 51, 52, 53, 54, 55, 56, 39, 38, 36, 35, 34, 33, 32, 31 except 44=257(LC 27), 45=287(LC 5), 46=289(LC 5), 47=271(LC 5), 42=286(LC 6), 41=288(LC 6), 40=267(LC 6)

FORCES. (lb) - Max. Comp./Max. Ten. - All forces 250 (lb) or less except when shown.
TOP CHORD 14-15=-132/269, 15-16=-132/269

NOTES- (13-16)
1) Unbalanced roof live loads have been considered for this design.
2) Wind: ASCE 7-16; Vult=120mph (3-second gust) Vasd=95mph; TCDL=5.0psf; BCDL=5.0psf; h=23ft; Cat. II; Exp B; Enclosed; MWFRS (envelope) gable end zone and C-C Corner(3E) 0-0-0 to 5-0-0, Exterior(2N) 5-0-0 to 20-0-0, Corner(3R) 20-0-0 to 30-0-0, Exterior(2N) 30-0-0 to 45-10-8, Corner(3E) 45-10-8 to 50-10-8 zone; cantilever left and right exposed ; end vertical left and right exposed;C-C for members and forces & MWFRS for reactions shown; Lumber DOL=1.60 plate grip DOL=1.60
3) Truss designed for wind loads in the plane of the truss only. For studs exposed to wind (normal to the face), see Standard Industry Gable End Details as applicable, or consult qualified building designer as per ANSI/TPI 1.
4) TCLL: ASCE 7-16; Pr=20.0 psf (roof LL: Lum DOL=1.15 Plate DOL=1.15); Pf=20.0 psf (Lum DOL=1.15 Plate DOL=1.15); Is=1.0; Rough Cat B; Partially Exp.; Ce=1.0; Cs=1.00; Ct=1.10
5) Unbalanced snow loads have been considered for this design.
6) This truss has been designed for greater of min roof live load of 12.0 psf or 2.00 times flat roof load of 20.0 psf on overhangs non-concurrent with other live loads.
7) All plates are 2x4 MT20 unless otherwise indicated.
8) Gable requires continuous bottom chord bearing.
9) Gable studs spaced at 2-0-0 oc.
10) This truss has been designed for a 10.0 psf bottom chord live load nonconcurrent with any other live loads.
11) * This truss has been designed for a live load of 30.0psf on the bottom chord in all areas where a rectangle 3-6-0 tall by 1-0-0 wide will fit between the bottom chord and any other members, with BCDL = 10.0psf.
12) Provide mechanical connection (by others) of truss to bearing plate capable of withstanding 100 lb uplift at joint(s) 1, 45, 46, 47, 48, 49, 51, 52, 53, 54, 55, 56, 42, 41, 40, 39, 38, 36, 35, 34, 33, 32, 31.

NORTH CAROLINA PROFESSIONAL SEAL 28147 ENGINEER MARK K. MORRIS

1/15/2024

Continued on page 2

13) Graphical bracing representation does not depict the size, type or the orientation of the brace on the member. Symbol only indicates that the member must be braced.
14) Bearing symbols are only graphical representations of a possible bearing condition. Bearing symbols are not considered in the structural design of the truss to support the loads indicated.
15) Web bracing shown is for lateral support of individual web members only. Refer to BCSI - Guide to Good Practice for Handling, Installing, Restraining & Bracing of Metal Plate Connected Wood Trusses for additional bracing guidelines, including diagonal bracing.
16) SEE BCSI-B3 SUMMARY SHEET- PERMANENT RESTRAING/BRACING OF CHORDS & WEB MEMBERS FOR RECOMMENDED MINIMUM BRACING REQUIREMENTS OF TOP CHORD, BOTTOM CHORD, AND WEB PLANES. IN ADDITION TO THESE MINIMUM GUIDELINES, ALWAYS CONSULT THE PROJECT ARCHITECT OR ENGINEER FOR ADDITIONAL BRACING CONSIDERATIONS.

LOAD CASE(S) Standard

1/15/2024

Job	Truss	Truss Type	Qty	Ply	LOT 91 PROVIDENCE CREEK | 59 DAVINHALL DRIVE FUQUAY-VARINA, NC
24-0290-R01	R02	Common	2	1	Job Reference (optional) **# 44170**

Run: 8.430 s Feb 12 2021 Print: 8.430 s Feb 12 2021 MiTek Industries, Inc. Tue Jan 16 14:50:36 2024 Page 1
ID:1EhuSslMpTbkFHTWLa5hq6ypz0?-reVs59rHSnCGo0AlC2onDzNETSZCQHQD78xlonzum7n

8-6-5	16-9-3	25-0-0	33-2-13	41-5-11	50-0-0	50-10-8
8-6-5	8-2-13	8-2-13	8-2-13	8-2-13	8-6-5	0-10-8

Scale = 1:81.6

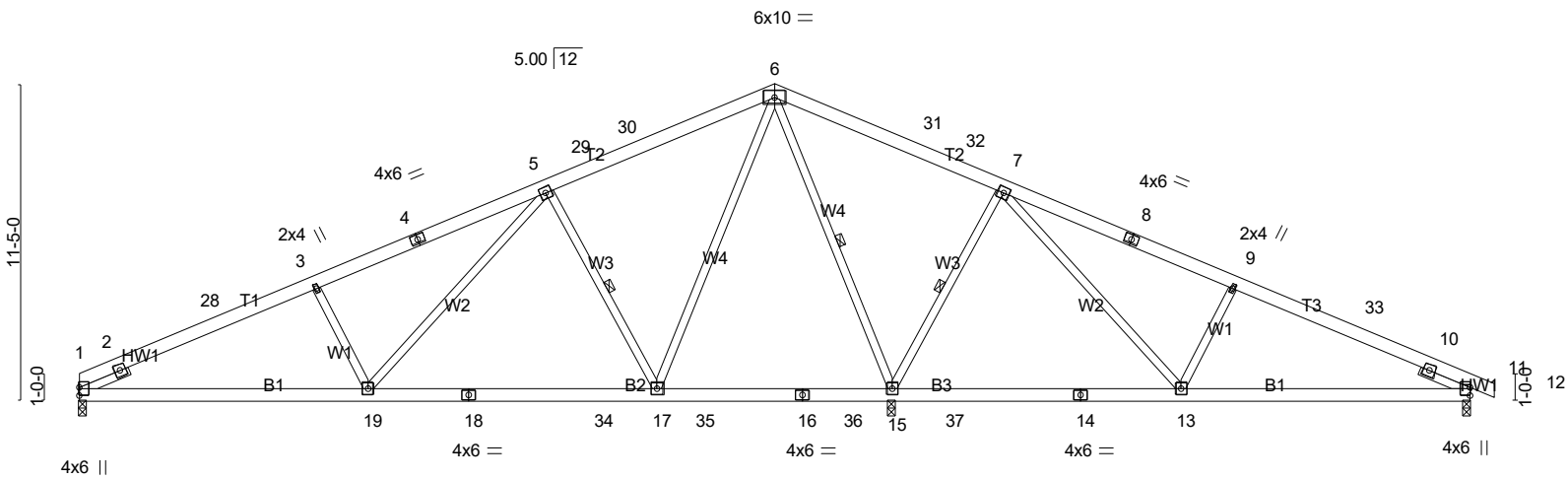

10-4-10	20-9-4	29-2-12	39-7-6	50-0-0
10-4-10	10-4-10	8-5-8	10-4-10	10-4-10

LOADING (psf)		**SPACING-** 2-0-0	**CSI.**		**DEFL.** in (loc) l/defl L/d	**PLATES**	**GRIP**
TCLL (roof)	20.0	Plate Grip DOL 1.15	TC	0.49	Vert(LL) -0.18 17-19 >999 240	MT20	244/190
Snow (Pf)	20.0	Lumber DOL 1.15	BC	0.56	Vert(CT) -0.27 17-19 >999 180		
TCDL	10.0	Rep Stress Incr YES	WB	0.99	Horz(CT) 0.03 15 n/a n/a		
BCLL	0.0 *	Code IRC2021/TPI2014	Matrix-AS			Weight: 350 lb	FT = 20%
BCDL	10.0						

LUMBER-
TOP CHORD 2x6 SP No.2
BOT CHORD 2x6 SP No.2
WEBS 2x4 SP No.3 *Except*
W4: 2x4 SP No.1
SLIDER Left 2x4 SP No.3 -° 1-11-0, Right 2x4 SP No.3 -° 1-11-0

BRACING-
TOP CHORD Structural wood sheathing directly applied.
BOT CHORD Rigid ceiling directly applied.
WEBS 1 Row at midpt 5-17, 6-15, 7-15

MiTek recommends that Stabilizers and required cross bracing be installed during truss erection, in accordance with Stabilizer Installation guide.

REACTIONS. (lb/size) 1=956/0-3-8 (min. 0-1-8), 15=2511/0-3-8 (min. 0-3-5), 11=585/0-3-8 (min. 0-1-8)
Max Horz 1=-147(LC 15)
Max Uplift1=-113(LC 14), 15=-126(LC 14), 11=-110(LC 15)
Max Grav 1=1033(LC 21), 15=2818(LC 3), 11=673(LC 35)

FORCES. (lb) - Max. Comp./Max. Ten. - All forces 250 (lb) or less except when shown.
TOP CHORD 1-2=-674/0, 2-28=-1711/197, 3-28=-1629/213, 3-4=-1527/216, 4-5=-1362/234, 5-29=-597/158, 29-30=-518/167, 6-30=-480/186, 6-31=0/870, 31-32=0/774, 7-32=0/728, 7-8=-427/196, 8-9=-601/179, 9-33=-727/175, 10-33=-728/159, 10-11=-454/0
BOT CHORD 1-19=-259/1505, 18-19=-116/860, 18-34=-116/860, 17-34=-116/860, 15-37=-421/91, 14-37=-421/91, 13-14=-421/91, 11-13=-83/672
WEBS 3-19=-427/192, 5-19=-91/782, 5-17=-946/254, 6-17=-141/1273, 6-15=-1816/178, 7-15=-970/255, 7-13=-94/880, 9-13=-478/194

NOTES- (11-14)
1) Unbalanced roof live loads have been considered for this design.
2) Wind: ASCE 7-16; Vult=120mph (3-second gust) Vasd=95mph; TCDL=5.0psf; BCDL=5.0psf; h=23ft; Cat. II; Exp B; Enclosed; MWFRS (envelope) gable end zone and C-C Exterior(2E) 0-0-0 to 5-0-0, Interior(1) 5-0-0 to 20-0-0, Exterior(2R) 20-0-0 to 30-0-0, Interior(1) 30-0-0 to 45-10-8, Exterior(2E) 45-10-8 to 50-10-8 zone; cantilever left and right exposed ; end vertical left and right exposed;C-C for members and forces & MWFRS for reactions shown; Lumber DOL=1.60 plate grip DOL=1.60
3) TCLL: ASCE 7-16; Pr=20.0 psf (roof LL: Lum DOL=1.15 Plate DOL=1.15); Pf=20.0 psf (Lum DOL=1.15 Plate DOL=1.15); Is=1.0; Rough Cat B; Partially Exp.; Ce=1.0; Cs=1.00; Ct=1.10
4) Unbalanced snow loads have been considered for this design.
5) This truss has been designed for greater of min roof live load of 12.0 psf or 2.00 times flat roof load of 20.0 psf on overhangs non-concurrent with other live loads.
6) All plates are 5x5 MT20 unless otherwise indicated.
7) This truss has been designed for a 10.0 psf bottom chord live load nonconcurrent with any other live loads.
8) * This truss has been designed for a live load of 30.0psf on the bottom chord in all areas where a rectangle 3-6-0 tall by 1-0-0 wide will fit between the bottom chord and any other members, with BCDL = 10.0psf.
9) Provide mechanical connection (by others) of truss to bearing plate capable of withstanding 100 lb uplift at joint(s) except (jt=lb) 1=113, 15=126, 11=110.
10) This truss design requires that a minimum of 7/16" structural wood sheathing be applied directly to the top chord and 1/2" gypsum sheetrock be applied directly to the bottom chord.

NORTH CAROLINA PROFESSIONAL SEAL 28147 ENGINEER MARK K. MORRIS

1/15/2024

Continued on page 2

11) Graphical bracing representation does not depict the size, type or the orientation of the brace on the member. Symbol only indicates that the member must be braced.
12) Bearing symbols are only graphical representations of a possible bearing condition. Bearing symbols are not considered in the structural design of the truss to support the loads indicated.
13) Web bracing shown is for lateral support of individual web members only. Refer to BCSI - Guide to Good Practice for Handling, Installing, Restraining & Bracing of Metal Plate Connected Wood Trusses for additional bracing guidelines, including diagonal bracing.
14) SEE BCSI-B3 SUMMARY SHEET- PERMANENT RESTRAING/BRACING OF CHORDS & WEB MEMBERS FOR RECOMMENDED MINIMUM BRACING REQUIREMENTS OF TOP CHORD, BOTTOM CHORD, AND WEB PLANES. IN ADDITION TO THESE MINIMUM GUIDELINES, ALWAYS CONSULT THE PROJECT ARCHITECT OR ENGINEER FOR ADDITIONAL BRACING CONSIDERATIONS.

LOAD CASE(S) Standard

1/15/2024

Job	Truss	Truss Type	Qty	Ply	LOT 91 PROVIDENCE CREEK | 59 DAVINHALL DRIVE FUQUAY-VARINA, NC
24-0290-R01	R03	Common	4	1	Job Reference (optional) **# 44170**

Run: 8.430 s Feb 12 2021 Print: 8.430 s Feb 12 2021 MiTek Industries, Inc. Tue Jan 16 14:50:37 2024 Page 1
ID:1EhuSslMpTbkFHTWLa5hq6ypz0?-Jq3EJVsvD4K7PAIxmlJ0lAvPBsvR8kpNMogIKDzum7m

8-6-5	16-9-3	25-0-0	33-2-13	41-5-11	49-8-12
8-6-5	8-2-13	8-2-13	8-2-13	8-2-13	8-3-1

Scale = 1:81.1

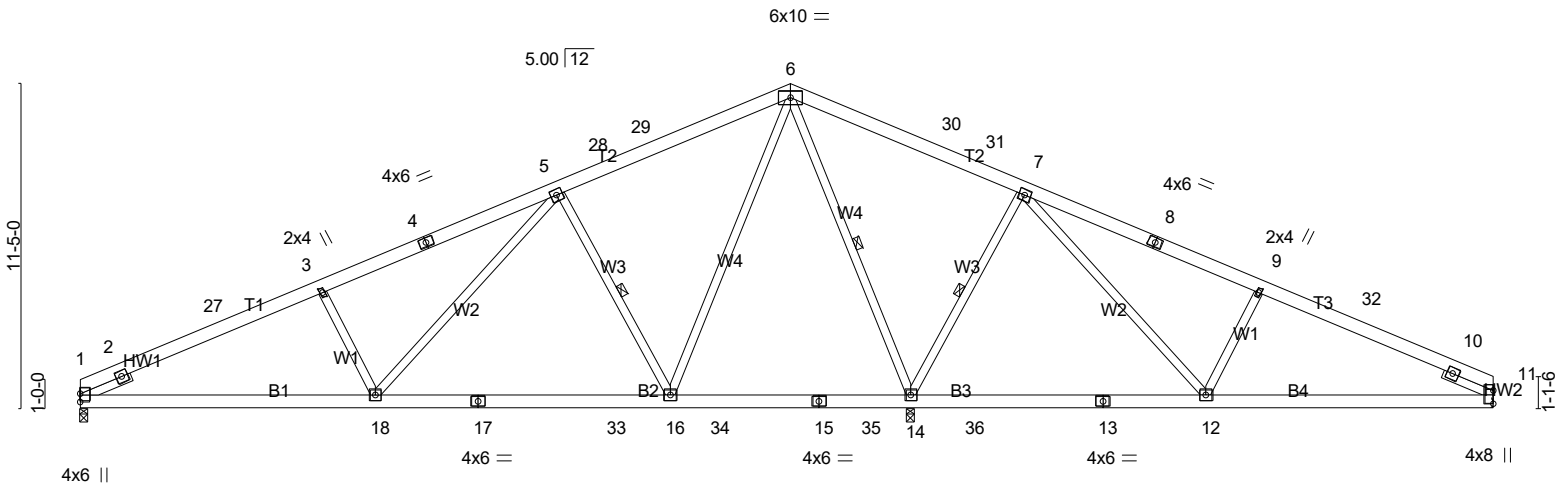

10-4-10	20-9-4	29-2-12	39-7-6	49-8-12
10-4-10	10-4-10	8-5-8	10-4-10	10-1-6

LOADING (psf)		**SPACING-** 2-0-0	**CSI.**		**DEFL.** in (loc) l/defl L/d	**PLATES**	**GRIP**
TCLL (roof)	20.0	Plate Grip DOL 1.15	TC	0.49	Vert(LL) -0.18 16-18 >999 240	MT20	244/190
Snow (Pf)	20.0	Lumber DOL 1.15	BC	0.56	Vert(CT) -0.27 16-18 >999 180		
TCDL	10.0	Rep Stress Incr YES	WB	0.98	Horz(CT) 0.03 14 n/a n/a		
BCLL	0.0 *	Code IRC2021/TPI2014	Matrix-AS			Weight: 347 lb	FT = 20%
BCDL	10.0						

LUMBER-
TOP CHORD 2x6 SP No.2
BOT CHORD 2x6 SP No.2
WEBS 2x4 SP No.3 *Except*
W4: 2x4 SP No.1
SLIDER Left 2x4 SP No.3 -° 1-11-0, Right 2x4 SP No.3 -° 1-11-0

BRACING-
TOP CHORD Structural wood sheathing directly applied.
BOT CHORD Rigid ceiling directly applied.
WEBS 1 Row at midpt 5-16, 6-14, 7-14

MiTek recommends that Stabilizers and required cross bracing be installed during truss erection, in accordance with Stabilizer Installation guide.

REACTIONS. (lb/size) 1=958/0-3-8 (min. 0-1-8), 14=2501/0-3-8 (min. 0-3-5), 11=519/Mechanical
Max Horz 1=139(LC 14)
Max Uplift1=-113(LC 14), 14=-126(LC 14), 11=-92(LC 15)
Max Grav 1=1032(LC 20), 14=2809(LC 3), 11=605(LC 34)

FORCES. (lb) - Max. Comp./Max. Ten. - All forces 250 (lb) or less except when shown.
TOP CHORD 1-2=-675/0, 2-27=-1710/198, 3-27=-1629/213, 3-4=-1526/216, 4-5=-1368/234, 5-28=-596/156, 28-29=-519/165, 6-29=-482/184, 6-30=0/864, 30-31=0/768, 7-31=0/721, 7-8=-402/188, 8-9=-576/170, 9-32=-675/167, 10-32=-697/152, 10-11=-383/0
BOT CHORD 1-18=-266/1505, 17-18=-123/858, 17-33=-123/858, 16-33=-123/858, 14-36=-412/84, 13-36=-412/84, 12-13=-412/84, 11-12=-87/643
WEBS 3-18=-426/192, 5-18=-91/781, 5-16=-937/254, 6-16=-141/1266, 6-14=-1800/178, 7-14=-962/254, 7-12=-90/861, 9-12=-465/192

NOTES- (11-14)
1) Unbalanced roof live loads have been considered for this design.
2) Wind: ASCE 7-16; Vult=120mph (3-second gust) Vasd=95mph; TCDL=5.0psf; BCDL=5.0psf; h=23ft; Cat. II; Exp B; Enclosed; MWFRS (envelope) gable end zone and C-C Exterior(2E) 0-0-0 to 4-11-11, Interior(1) 4-11-11 to 20-0-5, Exterior(2R) 20-0-5 to 29-11-11, Interior(1) 29-11-11 to 44-9-1, Exterior(2E) 44-9-1 to 49-8-12 zone; cantilever left and right exposed ; end vertical left and right exposed;C-C for members and forces & MWFRS for reactions shown; Lumber DOL=1.60 plate grip DOL=1.60
3) TCLL: ASCE 7-16; Pr=20.0 psf (roof LL: Lum DOL=1.15 Plate DOL=1.15); Pf=20.0 psf (Lum DOL=1.15 Plate DOL=1.15); Is=1.0; Rough Cat B; Partially Exp.; Ce=1.0; Cs=1.00; Ct=1.10
4) Unbalanced snow loads have been considered for this design.
5) All plates are 5x5 MT20 unless otherwise indicated.
6) This truss has been designed for a 10.0 psf bottom chord live load nonconcurrent with any other live loads.
7) * This truss has been designed for a live load of 30.0psf on the bottom chord in all areas where a rectangle 3-6-0 tall by 1-0-0 wide will fit between the bottom chord and any other members, with BCDL = 10.0psf.
8) Refer to girder(s) for truss to truss connections.
9) Provide mechanical connection (by others) of truss to bearing plate capable of withstanding 100 lb uplift at joint(s) 11 except (jt=lb) 1=113, 14=126.
10) This truss design requires that a minimum of 7/16" structural wood sheathing be applied directly to the top chord and 1/2" gypsum sheetrock be applied directly to the bottom chord.

NORTH CAROLINA PROFESSIONAL SEAL 28147 ENGINEER MARK K. MORRIS

1/15/2024

Continued on page 2

11) Graphical bracing representation does not depict the size, type or the orientation of the brace on the member. Symbol only indicates that the member must be braced.
12) Bearing symbols are only graphical representations of a possible bearing condition. Bearing symbols are not considered in the structural design of the truss to support the loads indicated.
13) Web bracing shown is for lateral support of individual web members only. Refer to BCSI - Guide to Good Practice for Handling, Installing, Restraining & Bracing of Metal Plate Connected Wood Trusses for additional bracing guidelines, including diagonal bracing.
14) SEE BCSI-B3 SUMMARY SHEET- PERMANENT RESTRAING/BRACING OF CHORDS & WEB MEMBERS FOR RECOMMENDED MINIMUM BRACING REQUIREMENTS OF TOP CHORD, BOTTOM CHORD, AND WEB PLANES. IN ADDITION TO THESE MINIMUM GUIDELINES, ALWAYS CONSULT THE PROJECT ARCHITECT OR ENGINEER FOR ADDITIONAL BRACING CONSIDERATIONS.

LOAD CASE(S) Standard

1/15/2024

Job	Truss	Truss Type	Qty	Ply	LOT 91 PROVIDENCE CREEK | 59 DAVINHALL DRIVE FUQUAY-VARINA, NC
24-0290-R01	R04	COMMON	2	1	Job Reference (optional) **# 44170**

Run: 8.430 s Feb 12 2021 Print: 8.430 s Feb 12 2021 MiTek Industries, Inc. Tue Jan 16 14:50:38 2024 Page 1
ID:1EhuSslMpTbkFHTWLa5hq6ypz0?-n0ccWrsX_OS_1KK7JSqFIOSarGFgtB2WaSQrtfzum7I

-0-10-8	8-6-5	16-9-3	25-0-0	33-2-13	41-5-11	49-8-12
0-10-8	8-6-5	8-2-13	8-2-13	8-2-13	8-2-13	8-3-1

Scale = 1:81.1

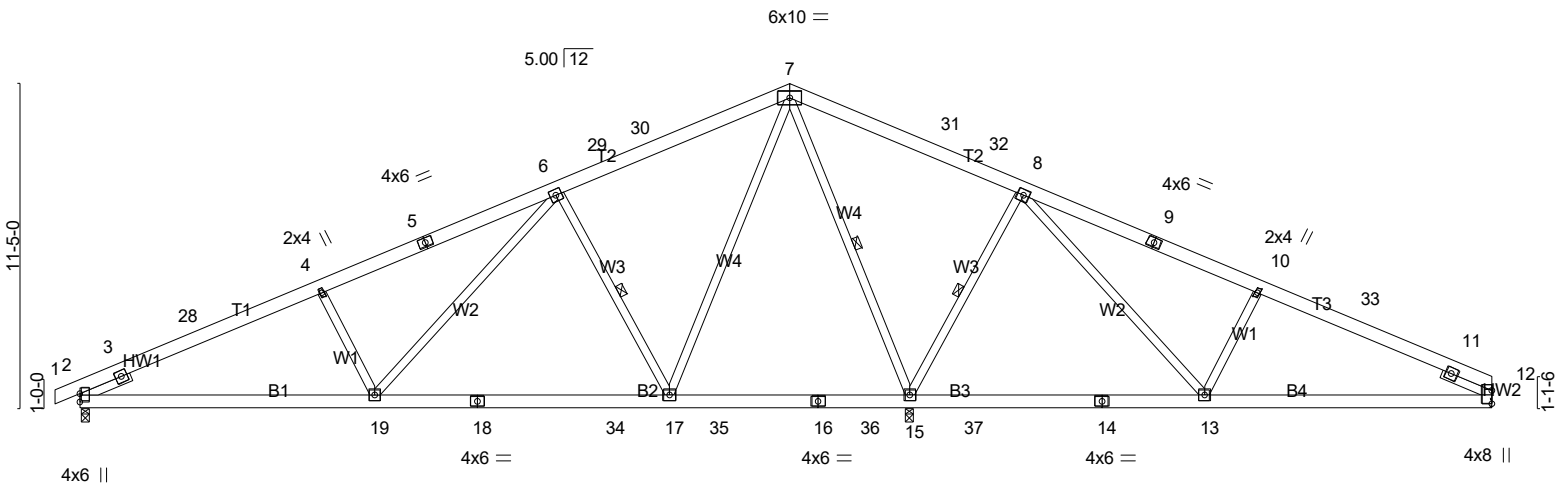

10-4-10	20-9-4	29-2-12	39-7-6	49-8-12
10-4-10	10-4-10	8-5-8	10-4-10	10-1-6

LOADING (psf)		**SPACING-** 2-0-0	**CSI.**		**DEFL.** in (loc) l/defl L/d	**PLATES**	**GRIP**
TCLL (roof)	20.0	Plate Grip DOL 1.15	TC	0.49	Vert(LL) -0.18 17-19 >999 240	MT20	244/190
Snow (Pf)	20.0	Lumber DOL 1.15	BC	0.56	Vert(CT) -0.28 17-19 >999 180		
TCDL	10.0	Rep Stress Incr YES	WB	0.98	Horz(CT) 0.03 15 n/a n/a		
BCLL	0.0 *	Code IRC2021/TPI2014	Matrix-AS			Weight: 349 lb	FT = 20%
BCDL	10.0						

LUMBER-
TOP CHORD 2x6 SP No.2
BOT CHORD 2x6 SP No.2
WEBS 2x4 SP No.3 *Except*
W4: 2x4 SP No.1
SLIDER Left 2x4 SP No.3 -° 1-11-0, Right 2x4 SP No.3 -° 1-11-0

BRACING-
TOP CHORD Structural wood sheathing directly applied.
BOT CHORD Rigid ceiling directly applied.
WEBS 1 Row at midpt 6-17, 7-15, 8-15

MiTek recommends that Stabilizers and required cross bracing be installed during truss erection, in accordance with Stabilizer Installation guide.

REACTIONS. (lb/size) 2=1011/0-3-8 (min. 0-1-8), 15=2502/0-3-8 (min. 0-3-5), 12=518/Mechanical
Max Horz 2=149(LC 14)
Max Uplift2=-127(LC 14), 15=-126(LC 14), 12=-92(LC 15)
Max Grav 2=1085(LC 21), 15=2810(LC 3), 12=605(LC 35)

FORCES. (lb) - Max. Comp./Max. Ten. - All forces 250 (lb) or less except when shown.
TOP CHORD 2-3=-665/0, 3-28=-1704/196, 4-28=-1623/212, 4-5=-1520/215, 5-6=-1363/233, 6-29=-594/154, 29-30=-517/163, 7-30=-480/182, 7-31=0/866, 31-32=0/770, 8-32=0/724, 8-9=-401/188, 9-10=-575/170, 10-33=-675/167, 11-33=-696/152, 11-12=-383/0
BOT CHORD 2-19=-265/1499, 18-19=-122/855, 18-34=-122/855, 17-34=-122/855, 15-37=-414/84, 14-37=-414/84, 13-14=-414/84, 12-13=-87/642
WEBS 4-19=-424/192, 6-19=-90/778, 6-17=-936/254, 7-17=-141/1266, 7-15=-1801/178, 8-15=-969/254, 8-13=-90/861, 10-13=-465/192

NOTES- (12-15)
1) Unbalanced roof live loads have been considered for this design.
2) Wind: ASCE 7-16; Vult=120mph (3-second gust) Vasd=95mph; TCDL=5.0psf; BCDL=5.0psf; h=23ft; Cat. II; Exp B; Enclosed; MWFRS (envelope) gable end zone and C-C Exterior(2E) -0-10-8 to 4-1-3, Interior(1) 4-1-3 to 20-0-5, Exterior(2R) 20-0-5 to 29-11-11, Interior(1) 29-11-11 to 44-9-1, Exterior(2E) 44-9-1 to 49-8-12 zone; cantilever left and right exposed ; end vertical left and right exposed;C-C for members and forces & MWFRS for reactions shown; Lumber DOL=1.60 plate grip DOL=1.60
3) TCLL: ASCE 7-16; Pr=20.0 psf (roof LL: Lum DOL=1.15 Plate DOL=1.15); Pf=20.0 psf (Lum DOL=1.15 Plate DOL=1.15); Is=1.0; Rough Cat B; Partially Exp.; Ce=1.0; Cs=1.00; Ct=1.10
4) Unbalanced snow loads have been considered for this design.
5) This truss has been designed for greater of min roof live load of 12.0 psf or 2.00 times flat roof load of 20.0 psf on overhangs non-concurrent with other live loads.
6) All plates are 5x5 MT20 unless otherwise indicated.
7) This truss has been designed for a 10.0 psf bottom chord live load nonconcurrent with any other live loads.
8) * This truss has been designed for a live load of 30.0psf on the bottom chord in all areas where a rectangle 3-6-0 tall by 1-0-0 wide will fit between the bottom chord and any other members, with BCDL = 10.0psf.
9) Refer to girder(s) for truss to truss connections.
10) Provide mechanical connection (by others) of truss to bearing plate capable of withstanding 100 lb uplift at joint(s) 12 except (jt=lb) 2=127, 15=126.
11) This truss design requires that a minimum of 7/16" structural wood sheathing be applied directly to the top chord and 1/2" gypsum sheetrock be applied directly to the bottom chord.

NORTH CAROLINA PROFESSIONAL SEAL 28147 ENGINEER MARK K. MORRIS

1/15/2024

Continued on page 2

12) Graphical bracing representation does not depict the size, type or the orientation of the brace on the member. Symbol only indicates that the member must be braced.
13) Bearing symbols are only graphical representations of a possible bearing condition. Bearing symbols are not considered in the structural design of the truss to support the loads indicated.
14) Web bracing shown is for lateral support of individual web members only. Refer to BCSI - Guide to Good Practice for Handling, Installing, Restraining & Bracing of Metal Plate Connected Wood Trusses for additional bracing guidelines, including diagonal bracing.
15) SEE BCSI-B3 SUMMARY SHEET- PERMANENT RESTRAING/BRACING OF CHORDS & WEB MEMBERS FOR RECOMMENDED MINIMUM BRACING REQUIREMENTS OF TOP CHORD, BOTTOM CHORD, AND WEB PLANES. IN ADDITION TO THESE MINIMUM GUIDELINES, ALWAYS CONSULT THE PROJECT ARCHITECT OR ENGINEER FOR ADDITIONAL BRACING CONSIDERATIONS.

LOAD CASE(S) Standard

1/15/2024

Job	Truss	Truss Type	Qty	Ply	LOT 91 PROVIDENCE CREEK | 59 DAVINHALL DRIVE FUQUAY-VARINA, NC
24-0290-R01	R05	COMMON	2	1	Job Reference (optional) **# 44170**

Run: 8.430 s Feb 12 2021 Print: 8.430 s Feb 12 2021 MiTek Industries, Inc. Tue Jan 16 14:50:38 2024 Page 1
ID:1EhuSslMpTbkFHTWLa5hq6ypz0?-n0ccWrsX_OS_1KK7JSqFIOSatGFgtBvWaSQrtfzum7I

-0-10-8	8-6-5	16-9-3	25-0-0	33-2-13	41-5-11	50-0-0	50-10-8
0-10-8	8-6-5	8-2-13	8-2-13	8-2-13	8-2-13	8-6-5	0-10-8

Scale = 1:81.7

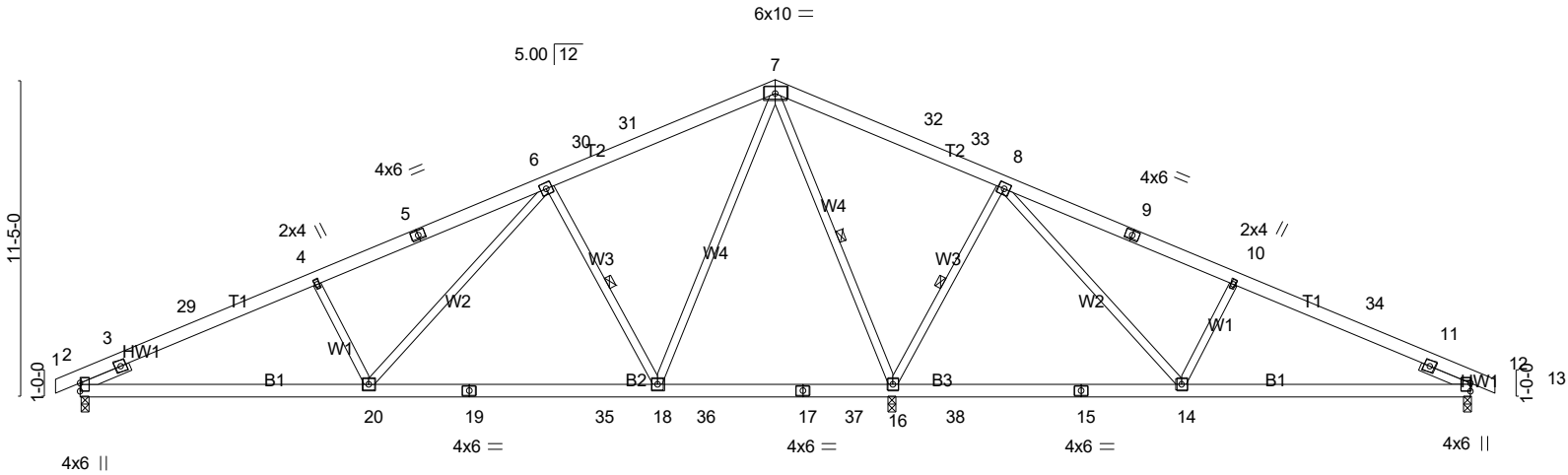

10-4-10	20-9-4	29-2-12	39-7-6	50-0-0
10-4-10	10-4-10	8-5-8	10-4-10	10-4-10

LOADING (psf)		**SPACING-** 2-0-0	**CSI.**		**DEFL.**	in	(loc)	l/defl	L/d	**PLATES**	**GRIP**
TCLL (roof)	20.0	Plate Grip DOL 1.15	TC	0.49	Vert(LL)	-0.18	18-20	>999	240	MT20	244/190
Snow (Pf)	20.0	Lumber DOL 1.15	BC	0.56	Vert(CT)	-0.28	18-20	>999	180		
TCDL	10.0	Rep Stress Incr YES	WB	0.99	Horz(CT)	0.03	16	n/a	n/a		
BCLL	0.0 *	Code IRC2021/TPI2014	Matrix-AS							Weight: 352 lb	FT = 20%
BCDL	10.0										

LUMBER-
TOP CHORD 2x6 SP No.2
BOT CHORD 2x6 SP No.2
WEBS 2x4 SP No.3 *Except*
W4: 2x4 SP No.1
SLIDER Left 2x4 SP No.3 -° 1-11-0, Right 2x4 SP No.3 -° 1-11-0

BRACING-
TOP CHORD Structural wood sheathing directly applied.
BOT CHORD Rigid ceiling directly applied.
WEBS 1 Row at midpt 6-18, 7-16, 8-16

MiTek recommends that Stabilizers and required cross bracing be installed during truss erection, in accordance with Stabilizer Installation guide.

REACTIONS. (lb/size) 2=1009/0-3-8 (min. 0-1-8), 16=2513/0-3-8 (min. 0-3-5), 12=584/0-3-8 (min. 0-1-8)
Max Horz 2=142(LC 14)
Max Uplift2=-127(LC 14), 16=-126(LC 14), 12=-110(LC 15)
Max Grav 2=1085(LC 21), 16=2819(LC 3), 12=673(LC 35)

FORCES. (lb) - Max. Comp./Max. Ten. - All forces 250 (lb) or less except when shown.
TOP CHORD 2-3=-664/0, 3-29=-1704/195, 4-29=-1624/212, 4-5=-1520/215, 5-6=-1357/233, 6-30=-595/156, 30-31=-515/165, 7-31=-478/184, 7-32=0/872, 32-33=0/776, 8-33=0/730, 8-9=-427/196, 9-10=-600/179, 10-34=-726/175, 11-34=-727/159, 11-12=-454/0
BOT CHORD 2-20=-258/1499, 19-20=-115/856, 19-35=-115/856, 18-35=-115/856, 16-38=-423/91, 15-38=-423/91, 14-15=-423/91, 12-14=-83/671
WEBS 4-20=-425/192, 6-20=-90/778, 6-18=-945/254, 7-18=-141/1272, 7-16=-1817/179, 8-16=-977/255, 8-14=-94/880, 10-14=-478/194

NOTES- (11-14)
1) Unbalanced roof live loads have been considered for this design.
2) Wind: ASCE 7-16; Vult=120mph (3-second gust) Vasd=95mph; TCDL=5.0psf; BCDL=5.0psf; h=23ft; Cat. II; Exp B; Enclosed; MWFRS (envelope) gable end zone and C-C Exterior(2E) -0-10-8 to 4-1-8, Interior(1) 4-1-8 to 20-0-0, Exterior(2R) 20-0-0 to 30-0-0, Interior(1) 30-0-0 to 45-10-8, Exterior(2E) 45-10-8 to 50-10-8 zone; cantilever left and right exposed ; end vertical left and right exposed;C-C for members and forces & MWFRS for reactions shown; Lumber DOL=1.60 plate grip DOL=1.60
3) TCLL: ASCE 7-16; Pr=20.0 psf (roof LL: Lum DOL=1.15 Plate DOL=1.15); Pf=20.0 psf (Lum DOL=1.15 Plate DOL=1.15); Is=1.0; Rough Cat B; Partially Exp.; Ce=1.0; Cs=1.00; Ct=1.10
4) Unbalanced snow loads have been considered for this design.
5) This truss has been designed for greater of min roof live load of 12.0 psf or 2.00 times flat roof load of 20.0 psf on overhangs non-concurrent with other live loads.
6) All plates are 5x5 MT20 unless otherwise indicated.
7) This truss has been designed for a 10.0 psf bottom chord live load nonconcurrent with any other live loads.
8) * This truss has been designed for a live load of 30.0psf on the bottom chord in all areas where a rectangle 3-6-0 tall by 1-0-0 wide will fit between the bottom chord and any other members, with BCDL = 10.0psf.
9) Provide mechanical connection (by others) of truss to bearing plate capable of withstanding 100 lb uplift at joint(s) except (jt=lb) 2=127, 16=126, 12=110.
10) This truss design requires that a minimum of 7/16" structural wood sheathing be applied directly to the top chord and 1/2" gypsum sheetrock be applied directly to the bottom chord.

NORTH CAROLINA PROFESSIONAL SEAL 28147 ENGINEER MARK K. MORRIS

1/15/2024

Continued on page 2

11) Graphical bracing representation does not depict the size, type or the orientation of the brace on the member. Symbol only indicates that the member must be braced.
12) Bearing symbols are only graphical representations of a possible bearing condition. Bearing symbols are not considered in the structural design of the truss to support the loads indicated.
13) Web bracing shown is for lateral support of individual web members only. Refer to BCSI - Guide to Good Practice for Handling, Installing, Restraining & Bracing of Metal Plate Connected Wood Trusses for additional bracing guidelines, including diagonal bracing.
14) SEE BCSI-B3 SUMMARY SHEET- PERMANENT RESTRAING/BRACING OF CHORDS & WEB MEMBERS FOR RECOMMENDED MINIMUM BRACING REQUIREMENTS OF TOP CHORD, BOTTOM CHORD, AND WEB PLANES. IN ADDITION TO THESE MINIMUM GUIDELINES, ALWAYS CONSULT THE PROJECT ARCHITECT OR ENGINEER FOR ADDITIONAL BRACING CONSIDERATIONS.

LOAD CASE(S) Standard

1/15/2024

Job	Truss	Truss Type	Qty	Ply	LOT 91 PROVIDENCE CREEK | 59 DAVINHALL DRIVE FUQUAY-VARINA, NC
24-0290-R01	R06	COMMON	4	1	Job Reference (optional) **# 44170**

Run: 8.430 s Feb 12 2021 Print: 8.430 s Feb 12 2021 MiTek Industries, Inc. Tue Jan 16 14:50:39 2024 Page 1
ID:1EhuSslMpTbkFHTWLa5hq6ypz0?-FCA_jBt9liaqfTvJtALUrb_l5gblcftgp69PP6zum7k

-0-10-8	8-6-5	16-9-3	25-0-0	33-4-0	41-5-11	49-8-12
0-10-8	8-6-5	8-2-13	8-2-13	8-4-0	8-1-11	8-3-1

Scale = 1:81.1

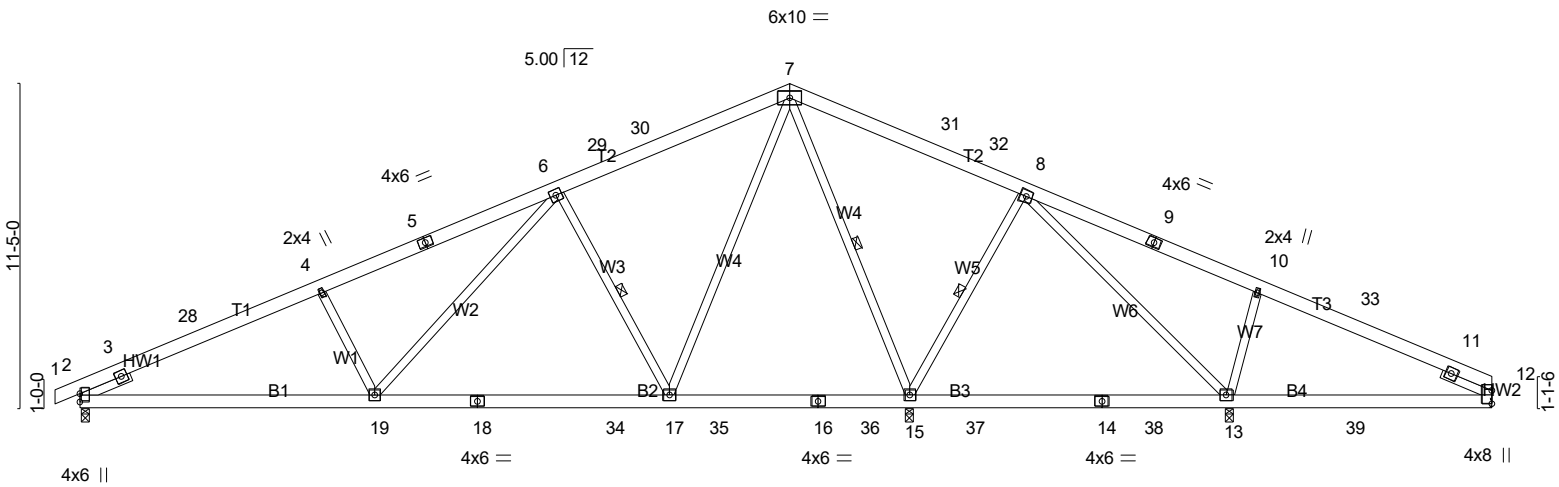

10-4-10	20-9-4	29-2-12	40-6-4	49-8-12
10-4-10	10-4-10	8-5-8	11-3-8	9-2-8

LOADING (psf)		**SPACING-** 2-0-0	**CSI.**		**DEFL.** in (loc) l/defl L/d	**PLATES**	**GRIP**
TCLL (roof)	20.0	Plate Grip DOL 1.15	TC	0.46	Vert(LL) -0.19 13-15 >723 240	MT20	244/190
Snow (Pf)	20.0	Lumber DOL 1.15	BC	0.57	Vert(CT) -0.28 17-19 >999 180		
TCDL	10.0	Rep Stress Incr YES	WB	0.94	Horz(CT) 0.03 15 n/a n/a		
BCLL	0.0 *	Code IRC2021/TPI2014	Matrix-AS			Weight: 349 lb	FT = 20%
BCDL	10.0						

LUMBER-
TOP CHORD 2x6 SP No.2
BOT CHORD 2x6 SP No.2
WEBS 2x4 SP No.3 *Except*
W4: 2x4 SP No.1
SLIDER Left 2x4 SP No.3 -° 1-11-0, Right 2x4 SP No.3 -° 1-11-0

BRACING-
TOP CHORD Structural wood sheathing directly applied.
BOT CHORD Rigid ceiling directly applied.
WEBS 1 Row at midpt 6-17, 7-15, 8-15

MiTek recommends that Stabilizers and required cross bracing be installed during truss erection, in accordance with Stabilizer Installation guide.

REACTIONS. All bearings 0-3-8 except (jt=length) 12=Mechanical.
(lb) - Max Horz 2=149(LC 14)
Max Uplift All uplift 100 lb or less at joint(s) 13 except 2=-122(LC 14), 15=-164(LC 14), 12=-110(LC 11)
Max Grav All reactions 250 lb or less at joint(s) except 2=1104(LC 21), 15=2494(LC 3), 13=572(LC 35), 12=402(LC 35)

FORCES. (lb) - Max. Comp./Max. Ten. - All forces 250 (lb) or less except when shown.
TOP CHORD 2-3=-684/0, 3-28=-1747/193, 4-28=-1666/219, 4-5=-1563/226, 5-6=-1424/244, 6-29=-654/220, 29-30=-576/229, 7-30=-539/248, 7-31=0/714, 31-32=0/620, 8-32=0/592, 8-9=-79/374, 9-10=-250/346, 10-33=-260/318, 11-33=-288/297, 11-12=-230/405
BOT CHORD 2-19=-255/1538, 18-19=-112/898, 18-34=-112/898, 17-34=-112/898, 15-37=-398/84, 14-37=-398/84, 14-38=-398/84, 13-38=-398/84, 13-39=-242/266, 12-39=-242/266
WEBS 4-19=-417/192, 6-19=-91/767, 6-17=-935/254, 7-17=-143/1255, 7-15=-1730/193, 8-15=-679/238, 8-13=-221/439, 10-13=-483/199

NOTES- (12-15)
1) Unbalanced roof live loads have been considered for this design.
2) Wind: ASCE 7-16; Vult=120mph (3-second gust) Vasd=95mph; TCDL=5.0psf; BCDL=5.0psf; h=23ft; Cat. II; Exp B; Enclosed; MWFRS (envelope) gable end zone and C-C Exterior(2E) -0-10-8 to 4-1-3, Interior(1) 4-1-3 to 20-0-5, Exterior(2R) 20-0-5 to 29-11-11, Interior(1) 29-11-11 to 44-9-1, Exterior(2E) 44-9-1 to 49-8-12 zone; cantilever left and right exposed ; end vertical left and right exposed; porch right exposed;C-C for members and forces & MWFRS for reactions shown; Lumber DOL=1.60 plate grip DOL=1.60
3) TCLL: ASCE 7-16; Pr=20.0 psf (roof LL: Lum DOL=1.15 Plate DOL=1.15); Pf=20.0 psf (Lum DOL=1.15 Plate DOL=1.15); Is=1.0; Rough Cat B; Partially Exp.; Ce=1.0; Cs=1.00; Ct=1.10
4) Unbalanced snow loads have been considered for this design.
5) This truss has been designed for greater of min roof live load of 12.0 psf or 2.00 times flat roof load of 20.0 psf on overhangs non-concurrent with other live loads.
6) All plates are 5x5 MT20 unless otherwise indicated.
7) This truss has been designed for a 10.0 psf bottom chord live load nonconcurrent with any other live loads.
8) * This truss has been designed for a live load of 30.0psf on the bottom chord in all areas where a rectangle 3-6-0 tall by 1-0-0 wide will fit between the bottom chord and any other members, with BCDL = 10.0psf.
9) Refer to girder(s) for truss to truss connections.
10) Provide mechanical connection (by others) of truss to bearing plate capable of withstanding 100 lb uplift at joint(s) 13 except (jt=lb) 2=122, 15=164, 12=110.
11) This truss design requires that a minimum of 7/16" structural wood sheathing be applied directly to the top chord and 1/2" gypsum sheetrock be applied directly to the bottom chord.

NORTH CAROLINA PROFESSIONAL SEAL 28147 ENGINEER MARK K. MORRIS

1/15/2024

Continued on page 2

12) Graphical bracing representation does not depict the size, type or the orientation of the brace on the member. Symbol only indicates that the member must be braced.
13) Bearing symbols are only graphical representations of a possible bearing condition. Bearing symbols are not considered in the structural design of the truss to support the loads indicated.
14) Web bracing shown is for lateral support of individual web members only. Refer to BCSI - Guide to Good Practice for Handling, Installing, Restraining & Bracing of Metal Plate Connected Wood Trusses for additional bracing guidelines, including diagonal bracing.
15) SEE BCSI-B3 SUMMARY SHEET- PERMANENT RESTRAING/BRACING OF CHORDS & WEB MEMBERS FOR RECOMMENDED MINIMUM BRACING REQUIREMENTS OF TOP CHORD, BOTTOM CHORD, AND WEB PLANES. IN ADDITION TO THESE MINIMUM GUIDELINES, ALWAYS CONSULT THE PROJECT ARCHITECT OR ENGINEER FOR ADDITIONAL BRACING CONSIDERATIONS.

LOAD CASE(S) Standard

1/15/2024

Job	Truss	Truss Type	Qty	Ply	LOT 91 PROVIDENCE CREEK | 59 DAVINHALL DRIVE FUQUAY-VARINA, NC
24-0290-R01	R07	Common	3	1	Job Reference (optional) **# 44170**

Run: 8.430 s Feb 12 2021 Print: 8.430 s Feb 12 2021 MiTek Industries, Inc. Tue Jan 16 14:50:39 2024 Page 1
ID:1EhuSslMpTbkFHTWLa5hq6ypz0?-FCA_jBt9liaqfTvJtALUrb_ldgWjcilgp69PP6zum7k

-0-10-8	8-6-5	16-9-3	25-0-0	33-6-4	41-5-12	49-8-12
0-10-8	8-6-5	8-2-13	8-2-13	8-6-4	7-11-8	8-3-0

Scale = 1:82.1

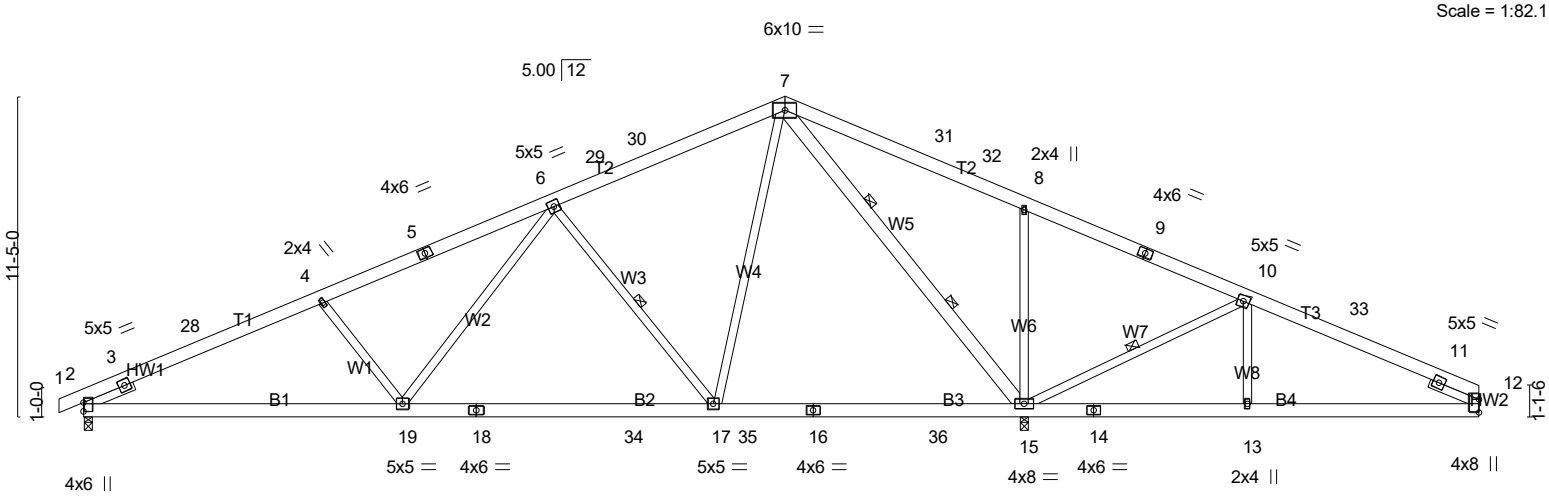

11-4-7	22-5-5	33-6-4	41-5-12	49-8-12
11-4-7	11-0-15	11-0-15	7-11-8	8-3-0

LOADING (psf)		**SPACING-** 2-0-0	**CSI.**	**DEFL.** in (loc) l/defl L/d	**PLATES**	**GRIP**
TCLL (roof)	20.0	Plate Grip DOL 1.15	TC 0.49	Vert(LL) -0.23 17-19 >999 240	MT20	244/190
Snow (Pf)	20.0	Lumber DOL 1.15	BC 0.83	Vert(CT) -0.35 17-19 >999 180		
TCDL	10.0	Rep Stress Incr YES	WB 0.76	Horz(CT) 0.05 15 n/a n/a		
BCLL	0.0 *	Code IRC2021/TPI2014	Matrix-AS		Weight: 360 lb	FT = 20%
BCDL	10.0					

LUMBER-
TOP CHORD 2x6 SP No.2
BOT CHORD 2x6 SP No.2
WEBS 2x4 SP No.3 *Except*
W5: 2x6 SP No.2
SLIDER Left 2x4 SP No.3 -° 1-11-0, Right 2x4 SP No.3 -° 1-11-0

BRACING-
TOP CHORD Structural wood sheathing directly applied.
BOT CHORD Rigid ceiling directly applied.
WEBS 1 Row at midpt 10-15, 6-17
2 Rows at 1/3 pts 7-15

MiTek recommends that Stabilizers and required cross bracing be installed during truss erection, in accordance with Stabilizer Installation guide.

REACTIONS. (lb/size) 2=1257/0-3-8 (min. 0-1-9), 15=2410/0-3-8 (min. 0-3-0), 12=365/Mechanical
Max Horz 2=149(LC 14)
Max Uplift2=-142(LC 14), 15=-134(LC 15), 12=-72(LC 15)
Max Grav 2=1314(LC 21), 15=2553(LC 3), 12=461(LC 35)

FORCES. (lb) - Max. Comp./Max. Ten. - All forces 250 (lb) or less except when shown.
TOP CHORD 2-3=-848/0, 3-28=-2282/227, 4-28=-2198/254, 4-5=-2080/222, 5-6=-1935/240, 6-29=-1121/178, 29-30=-1043/187, 7-30=-1006/206, 7-31=0/719, 31-32=0/624, 8-32=0/575, 8-9=-7/693, 9-10=-34/573, 10-33=-382/209, 11-33=-405/165
BOT CHORD 2-19=-302/2029, 18-19=-157/1471, 18-34=-157/1471, 17-34=-157/1471, 17-35=0/640, 16-35=0/640, 16-36=0/640, 15-36=0/640, 14-15=-152/374, 13-14=-152/374, 12-13=-152/374
WEBS 7-17=-86/1318, 7-15=-1960/150, 8-15=-646/225, 10-15=-826/171, 10-13=0/318, 6-17=-969/249, 6-19=-52/692, 4-19=-407/191

NOTES- (11-14)
1) Unbalanced roof live loads have been considered for this design.
2) Wind: ASCE 7-16; Vult=120mph (3-second gust) Vasd=95mph; TCDL=5.0psf; BCDL=5.0psf; h=23ft; Cat. II; Exp B; Enclosed; MWFRS (envelope) gable end zone and C-C Exterior(2E) -0-10-8 to 4-1-3, Interior(1) 4-1-3 to 20-0-5, Exterior(2R) 20-0-5 to 29-11-11, Interior(1) 29-11-11 to 44-9-1, Exterior(2E) 44-9-1 to 49-8-12 zone; cantilever left and right exposed ; end vertical left and right exposed;C-C for members and forces & MWFRS for reactions shown; Lumber DOL=1.60 plate grip DOL=1.60
3) TCLL: ASCE 7-16; Pr=20.0 psf (roof LL: Lum DOL=1.15 Plate DOL=1.15); Pf=20.0 psf (Lum DOL=1.15 Plate DOL=1.15); Is=1.0; Rough Cat B; Partially Exp.; Ce=1.0; Cs=1.00; Ct=1.10
4) Unbalanced snow loads have been considered for this design.
5) This truss has been designed for greater of min roof live load of 12.0 psf or 2.00 times flat roof load of 20.0 psf on overhangs non-concurrent with other live loads.
6) This truss has been designed for a 10.0 psf bottom chord live load nonconcurrent with any other live loads.
7) * This truss has been designed for a live load of 30.0psf on the bottom chord in all areas where a rectangle 3-6-0 tall by 1-0-0 wide will fit between the bottom chord and any other members, with BCDL = 10.0psf.
8) Refer to girder(s) for truss to truss connections.
9) Provide mechanical connection (by others) of truss to bearing plate capable of withstanding 100 lb uplift at joint(s) 12 except (jt=lb) 2=142, 15=134.
10) This truss design requires that a minimum of 7/16" structural wood sheathing be applied directly to the top chord and 1/2" gypsum sheetrock be applied directly to the bottom chord.

NORTH CAROLINA PROFESSIONAL SEAL 28147 ENGINEER MARK K. MORRIS

1/15/2024

Continued on page 2

11) Graphical bracing representation does not depict the size, type or the orientation of the brace on the member. Symbol only indicates that the member must be braced.
12) Bearing symbols are only graphical representations of a possible bearing condition. Bearing symbols are not considered in the structural design of the truss to support the loads indicated.
13) Web bracing shown is for lateral support of individual web members only. Refer to BCSI - Guide to Good Practice for Handling, Installing, Restraining & Bracing of Metal Plate Connected Wood Trusses for additional bracing guidelines, including diagonal bracing.
14) SEE BCSI-B3 SUMMARY SHEET- PERMANENT RESTRAING/BRACING OF CHORDS & WEB MEMBERS FOR RECOMMENDED MINIMUM BRACING REQUIREMENTS OF TOP CHORD, BOTTOM CHORD, AND WEB PLANES. IN ADDITION TO THESE MINIMUM GUIDELINES, ALWAYS CONSULT THE PROJECT ARCHITECT OR ENGINEER FOR ADDITIONAL BRACING CONSIDERATIONS.

LOAD CASE(S) Standard

1/15/2024

Job	Truss	Truss Type	Qty	Ply	LOT 91 PROVIDENCE CREEK | 59 DAVINHALL DRIVE FUQUAY-VARINA, NC
24-0290-R01	R07A	Common	7	1	Job Reference (optional) **# 44170**

Run: 8.430 s Feb 12 2021 Print: 8.430 s Feb 12 2021 MiTek Industries, Inc. Tue Jan 16 14:50:40 2024 Page 1
ID:1EhuSslMpTbkFHTWLa5hq6ypz0?-jPkNxXunW?ihGdUWRttjNpXwO3sHL8op2mvyxYzum7j

-0-10-8	8-6-5	16-9-3	25-0-0	33-6-4	41-5-12	49-8-12
0-10-8	8-6-5	8-2-13	8-2-13	8-6-4	7-11-8	8-3-0

Scale = 1:83.2

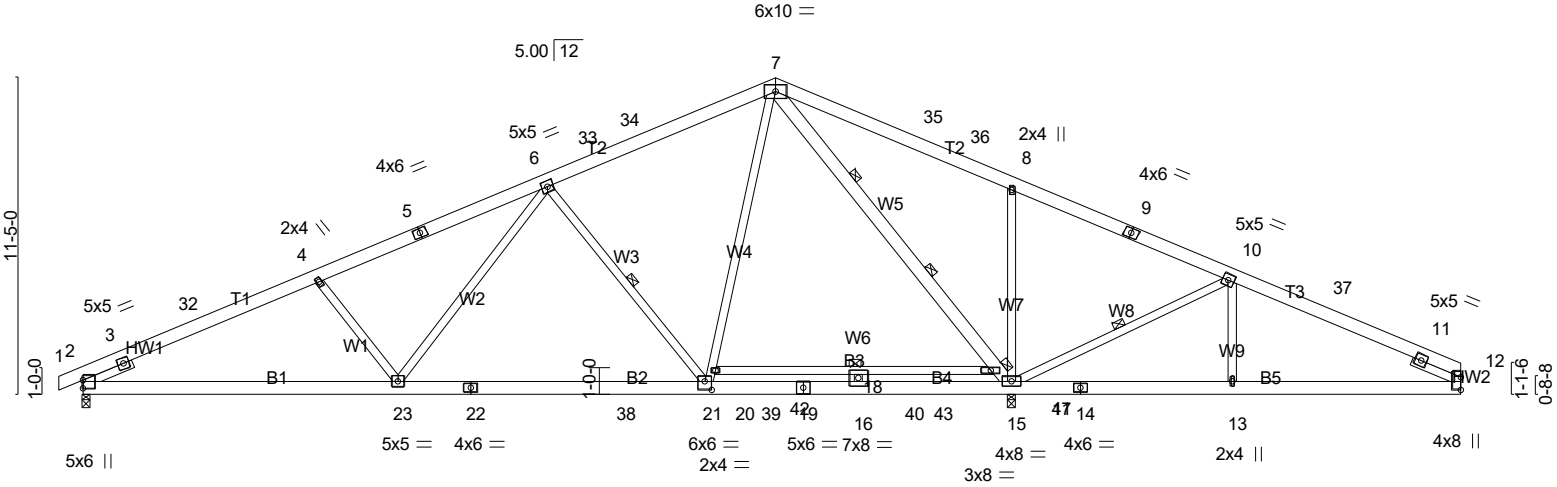

11-4-7	22-5-5	27-11-13	33-6-4	41-5-12	49-8-12
11-4-7	11-0-15	5-6-7	5-6-7	7-11-8	8-3-0

Plate Offsets (X,Y)-- [21:0-3-0,0-3-12]

LOADING (psf)		**SPACING-** 2-0-0	**CSI.**	**DEFL.** in (loc) l/defl L/d	**PLATES**	**GRIP**
TCLL (roof)	20.0	Plate Grip DOL 1.15	TC 0.49	Vert(LL) -0.36 18-20 >999 240	MT20	244/190
Snow (Pf)	20.0	Lumber DOL 1.15	BC 0.88	Vert(CT) -0.52 18-20 >769 180		
TCDL	10.0	Rep Stress Incr YES	WB 0.77	Horz(CT) 0.05 15 n/a n/a		
BCLL	0.0 *	Code IRC2021/TPI2014	Matrix-AS		Weight: 375 lb	FT = 20%
BCDL	10.0					

LUMBER-
TOP CHORD 2x6 SP No.2
BOT CHORD 2x6 SP No.2 *Except*
B4,B2: 2x6 SP No.1, B3: 2x4 SP No.2
WEBS 2x4 SP No.3 *Except*
W5: 2x6 SP No.2
SLIDER Left 2x4 SP No.3 -° 1-11-0, Right 2x4 SP No.3 -° 1-11-0

BRACING-
TOP CHORD Structural wood sheathing directly applied.
BOT CHORD Rigid ceiling directly applied. Except:
6-0-0 oc bracing: 17-20
WEBS 1 Row at midpt 10-15, 6-21
2 Rows at 1/3 pts 7-17

MiTek recommends that Stabilizers and required cross bracing be installed during truss erection, in accordance with Stabilizer Installation guide.

REACTIONS. (lb/size) 2=1292/0-3-8 (min. 0-1-10), 15=2583/0-3-8 (min. 0-3-8), 12=364/Mechanical
Max Horz 2=149(LC 14)
Max Uplift2=-126(LC 14), 15=-45(LC 15), 12=-75(LC 15)
Max Grav 2=1381(LC 5), 15=2942(LC 3), 12=458(LC 35)

FORCES. (lb) - Max. Comp./Max. Ten. - All forces 250 (lb) or less except when shown.
TOP CHORD 2-3=-922/0, 3-32=-2458/204, 4-32=-2372/221, 4-5=-2257/189, 5-6=-2112/206, 6-33=-1352/134, 33-34=-1274/144, 7-34=-1237/163, 7-35=0/703, 35-36=0/608, 8-36=0/558, 8-9=-5/676, 9-10=-33/556, 10-37=-369/246, 11-37=-393/201
BOT CHORD 2-23=-272/2189, 22-23=-121/1666, 22-38=-121/1666, 21-38=-121/1666, 21-39=0/804, 19-39=0/804, 16-19=0/804, 16-40=0/804, 40-41=0/804, 15-41=0/804, 14-15=-185/363, 13-14=-185/363, 12-13=-185/363
WEBS 20-21=-59/1461, 7-20=-32/1594, 7-17=-2182/103, 15-17=-2241/79, 8-15=-645/226, 10-15=-803/181, 6-21=-958/255, 6-23=-62/638, 4-23=-405/193, 16-18=-347/0

NOTES- (11-14)
1) Unbalanced roof live loads have been considered for this design.
2) Wind: ASCE 7-16; Vult=120mph (3-second gust) Vasd=95mph; TCDL=5.0psf; BCDL=5.0psf; h=23ft; Cat. II; Exp B; Enclosed; MWFRS (envelope) gable end zone and C-C Exterior(2E) -0-10-8 to 4-1-3, Interior(1) 4-1-3 to 20-0-5, Exterior(2R) 20-0-5 to 29-11-11, Interior(1) 29-11-11 to 44-9-1, Exterior(2E) 44-9-1 to 49-8-12 zone; cantilever left and right exposed ; end vertical left and right exposed;C-C for members and forces & MWFRS for reactions shown; Lumber DOL=1.60 plate grip DOL=1.60
3) TCLL: ASCE 7-16; Pr=20.0 psf (roof LL: Lum DOL=1.15 Plate DOL=1.15); Pf=20.0 psf (Lum DOL=1.15 Plate DOL=1.15); Is=1.0; Rough Cat B; Partially Exp.; Ce=1.0; Cs=1.00; Ct=1.10
4) Unbalanced snow loads have been considered for this design.
5) This truss has been designed for greater of min roof live load of 12.0 psf or 2.00 times flat roof load of 20.0 psf on overhangs non-concurrent with other live loads.
6) This truss has been designed for a 10.0 psf bottom chord live load nonconcurrent with any other live loads.
7) * This truss has been designed for a live load of 30.0psf on the bottom chord in all areas where a rectangle 3-6-0 tall by 1-0-0 wide will fit between the bottom chord and any other members, with BCDL = 10.0psf.
8) Refer to girder(s) for truss to truss connections.
9) Provide mechanical connection (by others) of truss to bearing plate capable of withstanding 100 lb uplift at joint(s) 15, 12 except (jt=lb) 2=126.
10) This truss design requires that a minimum of 7/16" structural wood sheathing be applied directly to the top chord and 1/2" gypsum sheetrock be applied directly to the bottom chord.

NORTH CAROLINA PROFESSIONAL SEAL 28147 ENGINEER MARK K. MORRIS

1/15/2024

Continued on page 2

11) Graphical bracing representation does not depict the size, type or the orientation of the brace on the member. Symbol only indicates that the member must be braced.
12) Bearing symbols are only graphical representations of a possible bearing condition. Bearing symbols are not considered in the structural design of the truss to support the loads indicated.
13) Web bracing shown is for lateral support of individual web members only. Refer to BCSI - Guide to Good Practice for Handling, Installing, Restraining & Bracing of Metal Plate Connected Wood Trusses for additional bracing guidelines, including diagonal bracing.
14) SEE BCSI-B3 SUMMARY SHEET- PERMANENT RESTRAING/BRACING OF CHORDS & WEB MEMBERS FOR RECOMMENDED MINIMUM BRACING REQUIREMENTS OF TOP CHORD, BOTTOM CHORD, AND WEB PLANES. IN ADDITION TO THESE MINIMUM GUIDELINES, ALWAYS CONSULT THE PROJECT ARCHITECT OR ENGINEER FOR ADDITIONAL BRACING CONSIDERATIONS.

LOAD CASE(S) Standard

1/15/2024

Job	Truss	Truss Type	Qty	Ply	LOT 91 PROVIDENCE CREEK | 59 DAVINHALL DRIVE FUQUAY-VARINA, NC
24-0290-R01	R08	GABLE	1	1	Job Reference (optional) **# 44170**

Run: 8.430 s Feb 12 2021 Print: 8.430 s Feb 12 2021 MiTek Industries, Inc. Tue Jan 16 14:50:42 2024 Page 1
ID:1EhuSslMpTbkFHTWLa5hq6ypz0?-fns7MDw22dzPWxeuYIvBSEcNltk?pCF6V4O30Rzum7h

-0-10-8 25-0-0 49-8-12
0-10-8 25-0-0 24-8-12

Scale = 1:82.6

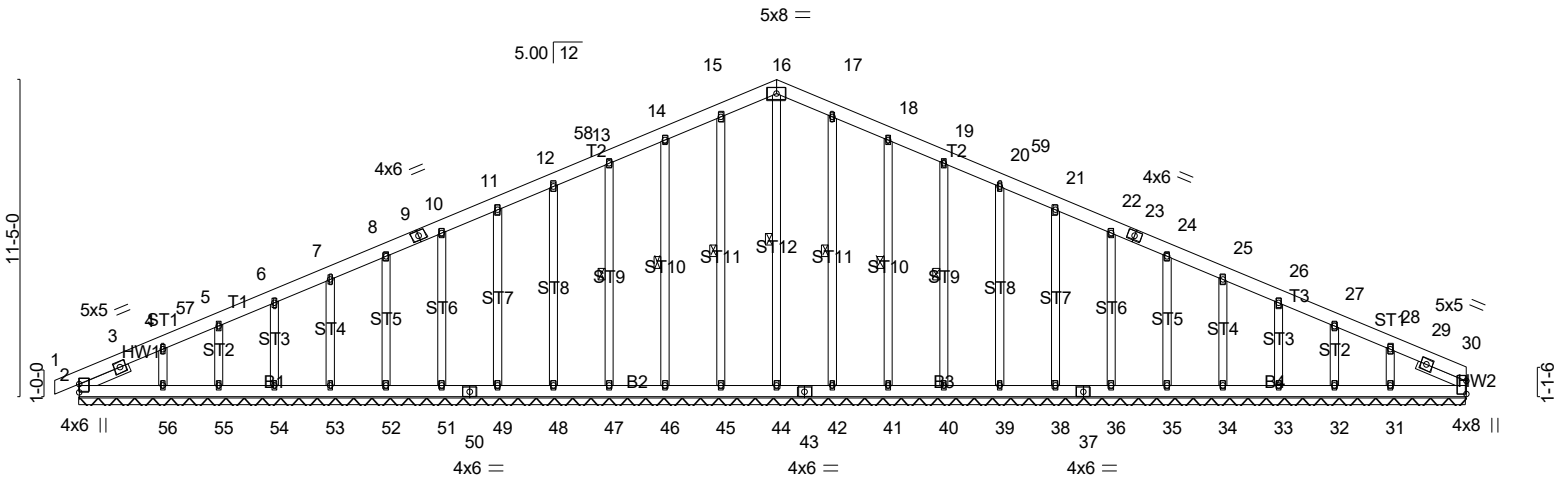

LOADING (psf)		SPACING- 2-0-0	CSI.		DEFL.	in	(loc)	l/defl	L/d	PLATES	GRIP
TCLL (roof)	20.0	Plate Grip DOL 1.15	TC	0.05	Vert(LL)	-0.00	1	n/r	180	MT20	244/190
Snow (Pf)	20.0	Lumber DOL 1.15	BC	0.03	Vert(CT)	0.00	1	n/r	80		
TCDL	10.0	Rep Stress Incr YES	WB	0.13	Horz(CT)	0.01	30	n/a	n/a		
BCLL	0.0 *	Code IRC2021/TPI2014	Matrix-S							Weight: 447 lb	FT = 20%
BCDL	10.0										

LUMBER-
TOP CHORD 2x6 SP No.2
BOT CHORD 2x6 SP No.2
OTHERS 2x4 SP No.3
SLIDER Left 2x4 SP No.3 -° 1-11-0, Right 2x4 SP No.3 -° 1-11-0

BRACING-
TOP CHORD Structural wood sheathing directly applied or 6-0-0 oc purlins.
BOT CHORD Rigid ceiling directly applied or 10-0-0 oc bracing.
WEBS 1 Row at midpt 16-44, 15-45, 14-46, 13-47, 17-42, 18-41, 19-40

MiTek recommends that Stabilizers and required cross bracing be installed during truss erection, in accordance with Stabilizer Installation guide.

REACTIONS. All bearings 49-8-12.
(lb) - Max Horz 2=-146(LC 15)
Max Uplift All uplift 100 lb or less at joint(s) 2, 45, 46, 47, 48, 49, 51, 52, 53, 54, 55, 56, 42, 41, 40, 39, 38, 36, 35, 34, 33, 32, 31
Max Grav All reactions 250 lb or less at joint(s) 2, 30, 48, 49, 51, 52, 53, 54, 55, 56, 39, 38, 36, 35, 34, 33, 32, 31 except 44=258(LC 27), 45=285(LC 5), 46=287(LC 5), 47=266(LC 5), 42=287(LC 6), 41=289(LC 6), 40=271(LC 6)

FORCES. (lb) - Max. Comp./Max. Ten. - All forces 250 (lb) or less except when shown.
TOP CHORD 14-15=-122/254, 15-16=-131/274, 16-17=-131/274, 17-18=-122/254

NOTES- (13-16)
1) Unbalanced roof live loads have been considered for this design.
2) Wind: ASCE 7-16; Vult=120mph (3-second gust) Vasd=95mph; TCDL=5.0psf; BCDL=5.0psf; h=23ft; Cat. II; Exp B; Enclosed; MWFRS (envelope) gable end zone and C-C Corner(3E) -0-10-8 to 4-1-3, Exterior(2N) 4-1-3 to 20-0-5, Corner(3R) 20-0-5 to 29-11-11, Exterior(2N) 29-11-11 to 44-9-1, Corner(3E) 44-9-1 to 49-8-12 zone; cantilever left and right exposed ; end vertical left and right exposed;C-C for members and forces & MWFRS for reactions shown; Lumber DOL=1.60 plate grip DOL=1.60
3) Truss designed for wind loads in the plane of the truss only. For studs exposed to wind (normal to the face), see Standard Industry Gable End Details as applicable, or consult qualified building designer as per ANSI/TPI 1.
4) TCLL: ASCE 7-16; Pr=20.0 psf (roof LL: Lum DOL=1.15 Plate DOL=1.15); Pf=20.0 psf (Lum DOL=1.15 Plate DOL=1.15); Is=1.0; Rough Cat B; Partially Exp.; Ce=1.0; Cs=1.00; Ct=1.10
5) Unbalanced snow loads have been considered for this design.
6) This truss has been designed for greater of min roof live load of 12.0 psf or 2.00 times flat roof load of 20.0 psf on overhangs non-concurrent with other live loads.
7) All plates are 2x4 MT20 unless otherwise indicated.
8) Gable requires continuous bottom chord bearing.
9) Gable studs spaced at 2-0-0 oc.
10) This truss has been designed for a 10.0 psf bottom chord live load nonconcurrent with any other live loads.
11) * This truss has been designed for a live load of 30.0psf on the bottom chord in all areas where a rectangle 3-6-0 tall by 1-0-0 wide will fit between the bottom chord and any other members, with BCDL = 10.0psf.
12) Provide mechanical connection (by others) of truss to bearing plate capable of withstanding 100 lb uplift at joint(s) 2, 45, 46, 47, 48, 49, 51, 52, 53, 54, 55, 56, 42, 41, 40, 39, 38, 36, 35, 34, 33, 32, 31.

NORTH CAROLINA PROFESSIONAL SEAL 28147 ENGINEER MARK K. MORRIS

1/15/2024

Continued on page 2

13) Graphical bracing representation does not depict the size, type or the orientation of the brace on the member. Symbol only indicates that the member must be braced.
14) Bearing symbols are only graphical representations of a possible bearing condition. Bearing symbols are not considered in the structural design of the truss to support the loads indicated.
15) Web bracing shown is for lateral support of individual web members only. Refer to BCSI - Guide to Good Practice for Handling, Installing, Restraining & Bracing of Metal Plate Connected Wood Trusses for additional bracing guidelines, including diagonal bracing.
16) SEE BCSI-B3 SUMMARY SHEET- PERMANENT RESTRAING/BRACING OF CHORDS & WEB MEMBERS FOR RECOMMENDED MINIMUM BRACING REQUIREMENTS OF TOP CHORD, BOTTOM CHORD, AND WEB PLANES. IN ADDITION TO THESE MINIMUM GUIDELINES, ALWAYS CONSULT THE PROJECT ARCHITECT OR ENGINEER FOR ADDITIONAL BRACING CONSIDERATIONS.

LOAD CASE(S) Standard

1/15/2024

Job	Truss	Truss Type	Qty	Ply	LOT 91 PROVIDENCE CREEK | 59 DAVINHALL DRIVE FUQUAY-VARINA, NC
24-0290-R01	R09	Common Supported Gable	1	1	Job Reference (optional) **# 44170**

Run: 8.430 s Feb 12 2021 Print: 8.430 s Feb 12 2021 MiTek Industries, Inc. Tue Jan 16 14:50:42 2024 Page 1
ID:1EhuSslMpTbkFHTWLa5hq6ypz0?-fns7MDw22dzPWxeuYIvBSEcMitjqpCw6V4O30Rzum7h

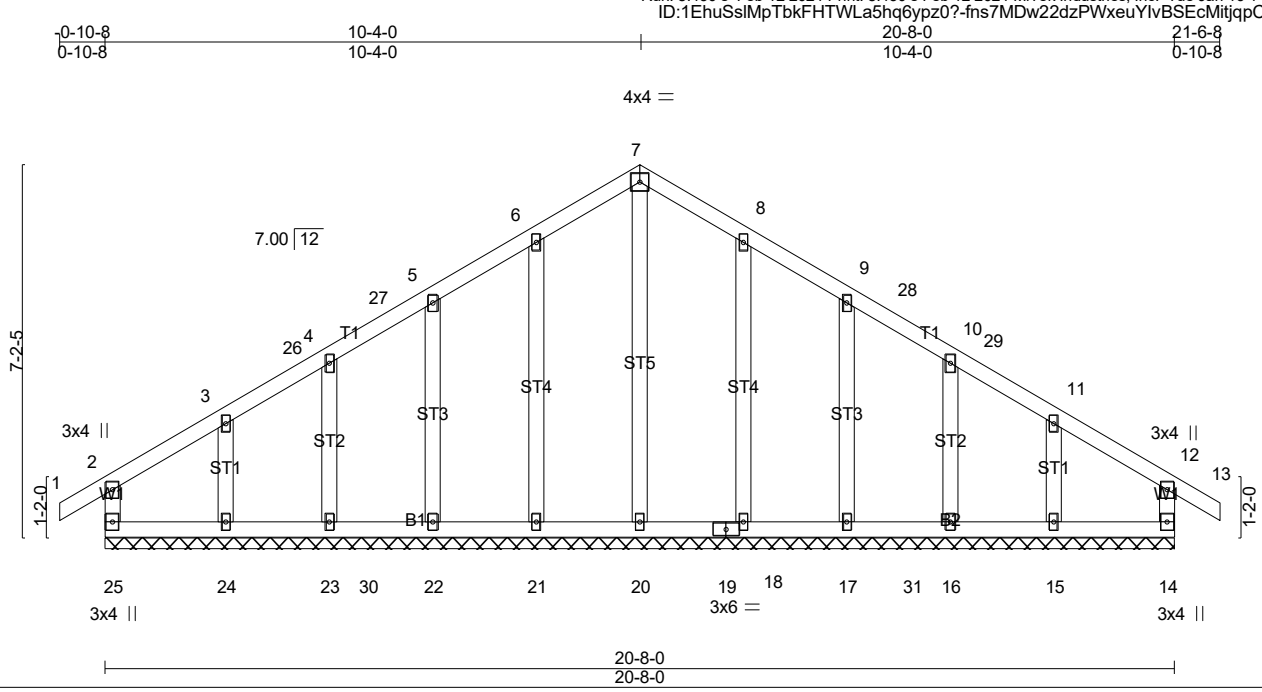

LOADING (psf)		SPACING- 2-0-0	CSI.	DEFL. in (loc) l/defl L/d	PLATES GRIP
TCLL (roof)	20.0	Plate Grip DOL 1.15	TC 0.12	Vert(LL) -0.00 13 n/r 180	MT20 244/190
Snow (Pf)	20.0	Lumber DOL 1.15	BC 0.10	Vert(CT) -0.00 13 n/r 80	
TCDL	10.0	Rep Stress Incr YES	WB 0.16	Horz(CT) 0.00 14 n/a n/a	
BCLL	0.0 *	Code IRC2021/TPI2014	Matrix-R		Weight: 126 lb FT = 20%
BCDL	10.0				

LUMBER-
TOP CHORD 2x4 SP No.2
BOT CHORD 2x4 SP No.3
WEBS 2x4 SP No.3
OTHERS 2x4 SP No.3

BRACING-
TOP CHORD Structural wood sheathing directly applied or 6-0-0 oc purlins, except end verticals.
BOT CHORD Rigid ceiling directly applied or 6-0-0 oc bracing.

MiTek recommends that Stabilizers and required cross bracing be installed during truss erection, in accordance with Stabilizer Installation guide.

REACTIONS. All bearings 20-8-0.
(lb) - Max Horz 25=-154(LC 12)
Max Uplift All uplift 100 lb or less at joint(s) 25, 14, 21, 22, 23, 24, 18, 17, 16, 15
Max Grav All reactions 250 lb or less at joint(s) 25, 14, 23, 24, 16, 15 except 20=263(LC 27), 21=297(LC 5), 22=273(LC 5), 18=297(LC 6), 17=273(LC 6)

FORCES. (lb) - Max. Comp./Max. Ten. - All forces 250 (lb) or less except when shown.

NOTES- (14-17)
1) Unbalanced roof live loads have been considered for this design.
2) Wind: ASCE 7-16; Vult=120mph (3-second gust) Vasd=95mph; TCDL=5.0psf; BCDL=5.0psf; h=23ft; Cat. II; Exp B; Enclosed; MWFRS (envelope) gable end zone and C-C Corner(3E) -0-10-8 to 3-11-2, Exterior(2N) 3-11-2 to 5-6-6, Corner(3R) 5-6-6 to 15-1-10, Exterior(2N) 15-1-10 to 16-8-14, Corner(3E) 16-8-14 to 21-6-8 zone; cantilever left and right exposed ; end vertical left and right exposed;C-C for members and forces & MWFRS for reactions shown; Lumber DOL=1.60 plate grip DOL=1.60
3) Truss designed for wind loads in the plane of the truss only. For studs exposed to wind (normal to the face), see Standard Industry Gable End Details as applicable, or consult qualified building designer as per ANSI/TPI 1.
4) TCLL: ASCE 7-16; Pr=20.0 psf (roof LL: Lum DOL=1.15 Plate DOL=1.15); Pf=20.0 psf (Lum DOL=1.15 Plate DOL=1.15); Is=1.0; Rough Cat B; Partially Exp.; Ce=1.0; Cs=1.00; Ct=1.10
5) Unbalanced snow loads have been considered for this design.
6) This truss has been designed for greater of min roof live load of 12.0 psf or 2.00 times flat roof load of 20.0 psf on overhangs non-concurrent with other live loads.
7) All plates are 2x4 MT20 unless otherwise indicated.
8) Gable requires continuous bottom chord bearing.
9) Truss to be fully sheathed from one face or securely braced against lateral movement (i.e. diagonal web).
10) Gable studs spaced at 2-0-0 oc.
11) This truss has been designed for a 10.0 psf bottom chord live load nonconcurrent with any other live loads.
12) * This truss has been designed for a live load of 30.0psf on the bottom chord in all areas where a rectangle 3-6-0 tall by 1-0-0 wide will fit between the bottom chord and any other members, with BCDL = 10.0psf.
13) Provide mechanical connection (by others) of truss to bearing plate capable of withstanding 100 lb uplift at joint(s) 25, 14, 21, 22, 23, 24 , 18, 17, 16, 15.

NORTH CAROLINA PROFESSIONAL SEAL 28147 ENGINEER MARK K. MORRIS

1/15/2024

Continued on page 2

14) Graphical bracing representation does not depict the size, type or the orientation of the brace on the member. Symbol only indicates that the member must be braced.
15) Bearing symbols are only graphical representations of a possible bearing condition. Bearing symbols are not considered in the structural design of the truss to support the loads indicated.
16) Web bracing shown is for lateral support of individual web members only. Refer to BCSI - Guide to Good Practice for Handling, Installing, Restraining & Bracing of Metal Plate Connected Wood Trusses for additional bracing guidelines, including diagonal bracing.
17) SEE BCSI-B3 SUMMARY SHEET- PERMANENT RESTRAING/BRACING OF CHORDS & WEB MEMBERS FOR RECOMMENDED MINIMUM BRACING REQUIREMENTS OF TOP CHORD, BOTTOM CHORD, AND WEB PLANES. IN ADDITION TO THESE MINIMUM GUIDELINES, ALWAYS CONSULT THE PROJECT ARCHITECT OR ENGINEER FOR ADDITIONAL BRACING CONSIDERATIONS.

LOAD CASE(S) Standard

1/15/2024

Job	Truss	Truss Type	Qty	Ply	LOT 91 PROVIDENCE CREEK | 59 DAVINHALL DRIVE FUQUAY-VARINA, NC
24-0290-R01	R10	Common	2	1	Job Reference (optional) **# 44170**

Run: 8.430 s Feb 12 2021 Print: 8.430 s Feb 12 2021 MiTek Industries, Inc. Tue Jan 16 14:50:43 2024 Page 1
ID:1EhuSslMpTbkFHTWLa5hq6ypz0?-8_QVZYwgpw5G75D560QQ?R9NlHsrYYvFkk7cYtzum7g

0-10-8	5-1-6	10-4-0	15-6-10	20-8-0	21-6-8
0-10-8	5-1-6	5-2-10	5-2-10	5-1-6	0-10-8

Scale = 1:43.9

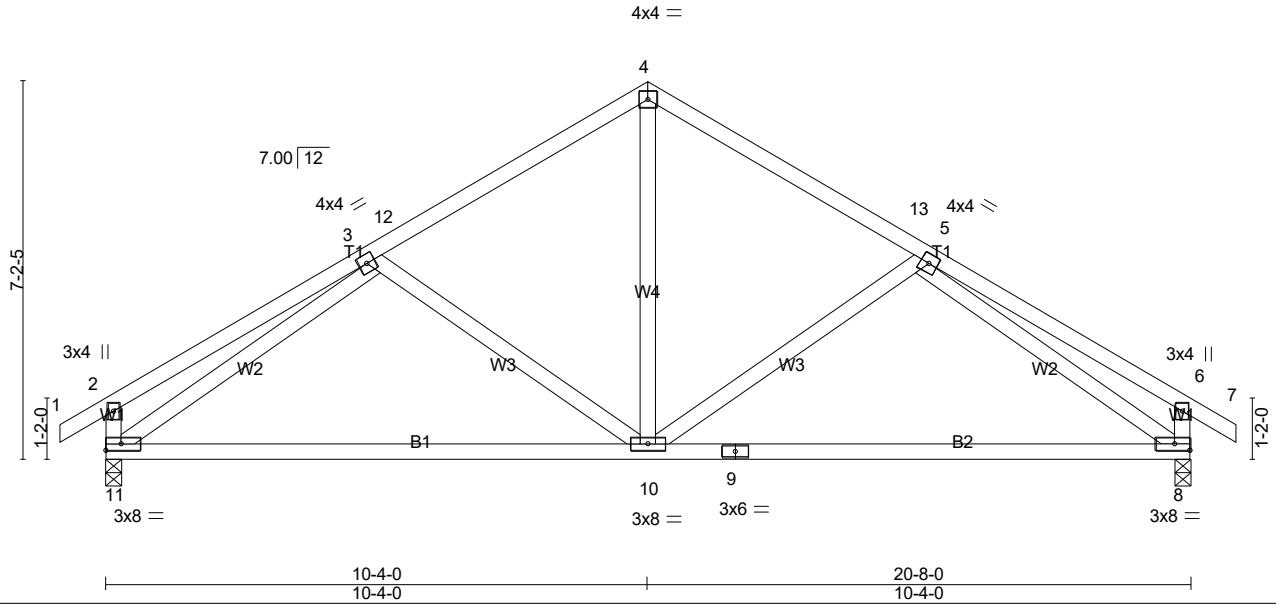

LOADING (psf)		SPACING-	2-0-0	CSI.		DEFL.	in	(loc)	l/defl	L/d	PLATES	GRIP
TCLL (roof)	20.0	Plate Grip DOL	1.15	TC	0.74	Vert(LL)	-0.19	8-10	>999	240	MT20	244/190
Snow (Pf)	20.0	Lumber DOL	1.15	BC	0.95	Vert(CT)	-0.38	8-10	>645	180		
TCDL	10.0	Rep Stress Incr	YES	WB	0.62	Horz(CT)	0.03	8	n/a	n/a		
BCLL	0.0 *	Code IRC2021/TPI2014		Matrix-AS							Weight: 118 lb	FT = 20%
BCDL	10.0											

LUMBER-
TOP CHORD 2x4 SP No.2
BOT CHORD 2x4 SP No.2
WEBS 2x4 SP No.3

BRACING-
TOP CHORD Structural wood sheathing directly applied, except end verticals.
BOT CHORD Rigid ceiling directly applied.

MiTek recommends that Stabilizers and required cross bracing be installed during truss erection, in accordance with Stabilizer Installation guide.

REACTIONS. (lb/size) 11=876/0-3-8 (min. 0-1-8), 8=876/0-3-8 (min. 0-1-8)
Max Horz 11=-154(LC 12)
Max Uplift11=-76(LC 14), 8=-76(LC 15)
Max Grav 11=911(LC 21), 8=911(LC 22)

FORCES. (lb) - Max. Comp./Max. Ten. - All forces 250 (lb) or less except when shown.
TOP CHORD 2-3=-351/39, 3-12=-864/102, 4-12=-745/127, 4-13=-745/127, 5-13=-864/102, 5-6=-351/39, 2-11=-335/74, 6-8=-335/73
BOT CHORD 10-11=-102/859, 9-10=-39/859, 8-9=-39/859
WEBS 4-10=-16/493, 5-10=-271/153, 3-10=-271/153, 3-11=-834/112, 5-8=-834/112

NOTES- (10-13)
1) Unbalanced roof live loads have been considered for this design.
2) Wind: ASCE 7-16; Vult=120mph (3-second gust) Vasd=95mph; TCDL=5.0psf; BCDL=5.0psf; h=23ft; Cat. II; Exp B; Enclosed; MWFRS (envelope) gable end zone and C-C Exterior(2E) -0-10-8 to 3-11-2, Interior(1) 3-11-2 to 5-6-6, Exterior(2R) 5-6-6 to 15-1-10, Interior(1) 15-1-10 to 16-8-14, Exterior(2E) 16-8-14 to 21-6-8 zone; cantilever left and right exposed ; end vertical left and right exposed;C-C for members and forces & MWFRS for reactions shown; Lumber DOL=1.60 plate grip DOL=1.60
3) TCLL: ASCE 7-16; Pr=20.0 psf (roof LL: Lum DOL=1.15 Plate DOL=1.15); Pf=20.0 psf (Lum DOL=1.15 Plate DOL=1.15); Is=1.0; Rough Cat B; Partially Exp.; Ce=1.0; Cs=1.00; Ct=1.10
4) Unbalanced snow loads have been considered for this design.
5) This truss has been designed for greater of min roof live load of 12.0 psf or 2.00 times flat roof load of 20.0 psf on overhangs non-concurrent with other live loads.
6) This truss has been designed for a 10.0 psf bottom chord live load nonconcurrent with any other live loads.
7) * This truss has been designed for a live load of 30.0psf on the bottom chord in all areas where a rectangle 3-6-0 tall by 1-0-0 wide will fit between the bottom chord and any other members.
8) Provide mechanical connection (by others) of truss to bearing plate capable of withstanding 100 lb uplift at joint(s) 11, 8.
9) This truss design requires that a minimum of 7/16" structural wood sheathing be applied directly to the top chord and 1/2" gypsum sheetrock be applied directly to the bottom chord.
10) Graphical bracing representation does not depict the size, type or the orientation of the brace on the member. Symbol only indicates that the member must be braced.
11) Bearing symbols are only graphical representations of a possible bearing condition. Bearing symbols are not considered in the structural design of the truss to support the loads indicated.
12) Web bracing shown is for lateral support of individual web members only. Refer to BCSI - Guide to Good Practice for Handling, Installing, Restraining & Bracing of Metal Plate Connected Wood Trusses for additional bracing guidelines, including diagonal bracing.
13) SEE BCSI-B3 SUMMARY SHEET- PERMANENT RESTRAING/BRACING OF CHORDS & WEB MEMBERS FOR RECOMMENDED MINIMUM BRACING REQUIREMENTS OF TOP CHORD, BOTTOM CHORD, AND WEB PLANES. IN ADDITION TO THESE MINIMUM GUIDELINES, ALWAYS CONSULT THE PROJECT ARCHITECT OR ENGINEER FOR ADDITIONAL BRACING CONSIDERATIONS.

NORTH CAROLINA PROFESSIONAL SEAL 28147 ENGINEER MARK K. MORRIS

1/15/2024

Continued on page 2

Warning - Verify design parameters and read notes before use. This design is based only upon parameters shown, and is for an individual building component to be installed and loaded vertically. Applicability of design parameters and proper incorporation of component is responsibility of building designer – not truss designer or truss engineer. Bracing shown is for lateral support of individual web members only. Additional temporary bracing to ensure stability during construction is the responsibility of the erector. Additional permanent bracing of the overall structure is the responsibility of the building designer. For general guidance regarding fabrication, quality control, storage, delivery, erection and bracing, consult ANSI/TPI 1 *National Design Standard for Metal Plate Connected Wood Truss Construction* and BCSI 1-03 Guide to *Good Practice for Handling, Installing & Bracing of Metal Plate Connected Wood Trusses* from Truss Plate Institute, 583 D'Onofrio Drive, Madison, WI 53719.

LOAD CASE(S) Standard

1/15/2024

Job	Truss	Truss Type	Qty	Ply	LOT 91 PROVIDENCE CREEK | 59 DAVINHALL DRIVE FUQUAY-VARINA, NC
24-0290-R01	R12	Common Girder	1	2	Job Reference (optional) **# 44170**

Run: 8.430 s Feb 12 2021 Print: 8.430 s Feb 12 2021 MiTek Industries, Inc. Tue Jan 16 14:50:45 2024 Page 1
ID:1EhuSslMpTbkFHTWLa5hq6ypz0?-4MYF_EywLYL_NOMTERSu4sEp?4dz0MRYC2cjdlzum7e

Scale = 1:72.2

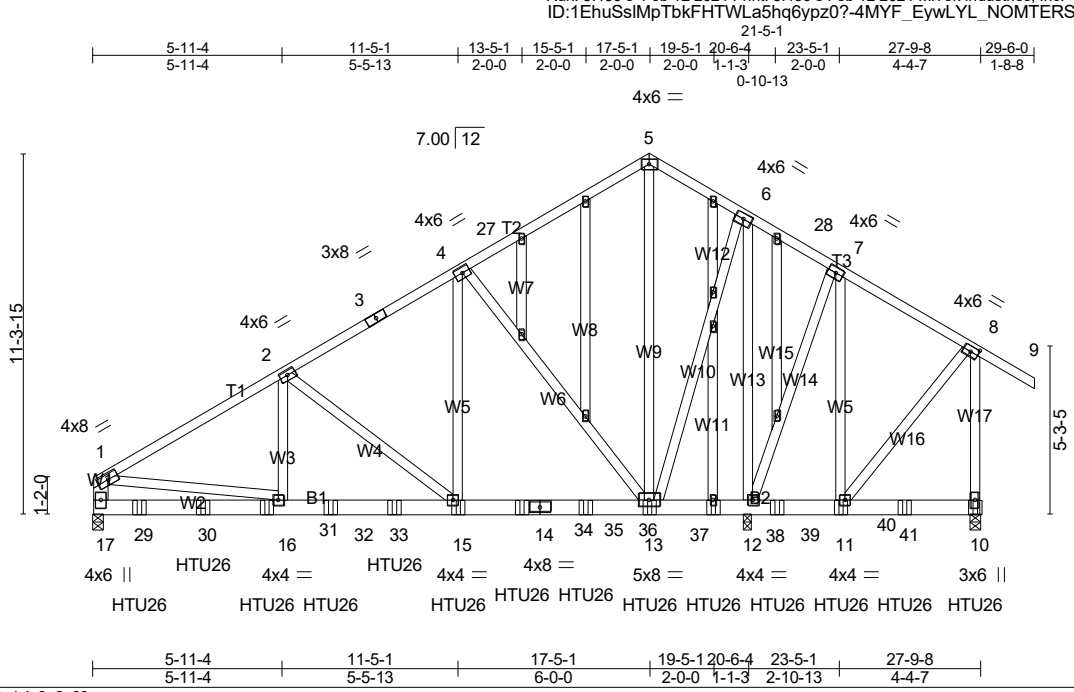

Plate Offsets (X,Y)-- [8:0-2-14,0-2-0]

LOADING (psf)		SPACING-	2-0-0	CSI.		DEFL.	in	(loc)	l/defl	L/d	PLATES	GRIP
TCLL (roof)	20.0	Plate Grip DOL	1.15	TC	0.37	Vert(LL)	-0.07	13-15	>999	240	MT20	244/190
Snow (Pf)	20.0	Lumber DOL	1.15	BC	0.59	Vert(CT)	-0.12	13-15	>999	180		
TCDL	10.0	Rep Stress Incr	NO	WB	1.00	Horz(CT)	0.02	10	n/a	n/a		
BCLL	0.0 *	Code IRC2021/TPI2014		Matrix-MSH							Weight: 568 lb	FT = 20%
BCDL	10.0											

LUMBER-
TOP CHORD 2x4 SP No.2
BOT CHORD 2x6 SP No.2
WEBS 2x4 SP No.3 *Except*
W1: 2x6 SP No.2

BRACING-
TOP CHORD Structural wood sheathing directly applied or 6-0-0 oc purlins, except end verticals.
BOT CHORD Rigid ceiling directly applied or 6-0-0 oc bracing.

REACTIONS. (lb/size) 17=2743/0-3-8 (min. 0-1-11), 12=4110/0-3-8 (min. 0-2-9), 10=1026/0-3-8 (min. 0-1-8)
Max Horz 17=270(LC 11)
Max Uplift17=-464(LC 12), 12=-803(LC 12), 10=-242(LC 13)
Max Grav 17=2909(LC 2), 12=4306(LC 2), 10=1076(LC 20)

FORCES. (lb) - Max. Comp./Max. Ten. - All forces 250 (lb) or less except when shown.
TOP CHORD 1-2=-3552/573, 2-3=-2440/407, 3-4=-2291/432, 4-27=-881/176, 5-27=-744/203, 5-6=-778/229, 8-10=-489/90, 1-17=-2286/386
BOT CHORD 17-29=-325/657, 29-30=-325/657, 30-31=-325/657, 16-31=-325/657, 16-32=-549/2994, 32-33=-549/2994, 15-33=-549/2994, 15-34=-381/2041, 14-34=-381/2041, 14-35=-381/2041, 35-36=-381/2041, 13-36=-381/2041
WEBS 2-16=-148/1023, 2-15=-1205/280, 4-15=-368/2181, 4-13=-2234/489, 5-13=-142/519, 6-13=-400/2431, 6-12=-2901/476, 7-12=-694/251, 7-11=-230/609, 1-16=-321/2366

NOTES- (14-17)
1) 2-ply truss to be connected together with 10d (0.131"x3") nails as follows:
Top chords connected as follows: 2x4 - 1 row at 0-9-0 oc, 2x6 - 2 rows staggered at 0-9-0 oc.
Bottom chords connected as follows: 2x6 - 2 rows staggered at 0-9-0 oc.
Webs connected as follows: 2x4 - 1 row at 0-9-0 oc.
2) All loads are considered equally applied to all plies, except if noted as front (F) or back (B) face in the LOAD CASE(S) section. Ply to ply connections have been provided to distribute only loads noted as (F) or (B), unless otherwise indicated.
3) Unbalanced roof live loads have been considered for this design.
4) Wind: ASCE 7-16; Vult=120mph (3-second gust) Vasd=95mph; TCDL=5.0psf; BCDL=5.0psf; h=23ft; Cat. II; Exp B; Enclosed; MWFRS (envelope) gable end zone; cantilever left and right exposed ; end vertical left and right exposed; porch right exposed; Lumber DOL=1.60 plate grip DOL=1.60
5) TCLL: ASCE 7-16; Pr=20.0 psf (roof LL: Lum DOL=1.15 Plate DOL=1.15); Pf=20.0 psf (Lum DOL=1.15 Plate DOL=1.15); Is=1.0; Rough Cat B; Partially Exp.; Ce=1.0; Cs=1.00; Ct=1.10
6) Unbalanced snow loads have been considered for this design.
7) This truss has been designed for greater of min roof live load of 12.0 psf or 2.00 times flat roof load of 20.0 psf on overhangs non-concurrent with other live loads.
8) All plates are 2x4 MT20 unless otherwise indicated.
9) This truss has been designed for a 10.0 psf bottom chord live load nonconcurrent with any other live loads.
10) * This truss has been designed for a live load of 30.0psf on the bottom chord in all areas where a rectangle 3-6-0 tall by 1-0-0 wide will fit between the bottom chord and any other members, with BCDL = 10.0psf.
11) Provide mechanical connection (by others) of truss to bearing plate capable of withstanding 100 lb uplift at joint(s) except (jt=lb) 17=464 , 12=803, 10=242.

NORTH CAROLINA PROFESSIONAL SEAL 28147 ENGINEER MARK K. MORRIS

1/15/2024

Continued on page 2

NOTES- (14-17)

12) Use Simpson Strong-Tie HTU26 (20-10d Girder, 11-10dx1 1/2 Truss, Single Ply Girder) or equivalent spaced at 2-2-8 oc max. starting at 1-5-4 from the left end to 27-7-12 to connect truss(es) R07 (1 ply 2x6 SP), R07A (1 ply 2x6 SP), R06 (1 ply 2x6 SP) to back face of bottom chord.
13) Fill all nail holes where hanger is in contact with lumber.
14) Graphical bracing representation does not depict the size, type or the orientation of the brace on the member. Symbol only indicates that the member must be braced.
15) Bearing symbols are only graphical representations of a possible bearing condition. Bearing symbols are not considered in the structural design of the truss to support the loads indicated.
16) Web bracing shown is for lateral support of individual web members only. Refer to BCSI - Guide to Good Practice for Handling, Installing, Restraining & Bracing of Metal Plate Connected Wood Trusses for additional bracing guidelines, including diagonal bracing.
17) SEE BCSI-B3 SUMMARY SHEET- PERMANENT RESTRAING/BRACING OF CHORDS & WEB MEMBERS FOR RECOMMENDED MINIMUM BRACING REQUIREMENTS OF TOP CHORD, BOTTOM CHORD, AND WEB PLANES. IN ADDITION TO THESE MINIMUM GUIDELINES, ALWAYS CONSULT THE PROJECT ARCHITECT OR ENGINEER FOR ADDITIONAL BRACING CONSIDERATIONS.

LOAD CASE(S) Standard

1) Dead + Snow (balanced): Lumber Increase=1.15, Plate Increase=1.15
   Uniform Loads (plf)
   Vert: 1-5=-60, 5-8=-60, 8-9=-60, 10-17=-20
   Concentrated Loads (lb)
   Vert: 15=-404(B) 13=-404(B) 11=-379(B) 10=-387(B) 29=-406(B) 30=-406(B) 31=-406(B) 32=-404(B) 33=-404(B) 34=-404(B) 36=-404(B) 38=-404(B) 39=-379(B) 41=-379(B)

1/15/2024

Job	Truss	Truss Type	Qty	Ply	LOT 91 PROVIDENCE CREEK | 59 DAVINHALL DRIVE FUQUAY-VARINA, NC
24-0290-R01	R13	Common Supported Gable	1	1	Job Reference (optional) **# 44170**

Run: 8.430 s Feb 12 2021 Print: 8.430 s Feb 12 2021 MiTek Industries, Inc. Tue Jan 16 14:50:45 2024 Page 1
ID:1EhuSslMpTbkFHTWLa5hq6ypz0?-4MYF_EywLYL_NOMTERSu4sEng4lp0YhYC2cjdlzum7e

-0-10-8	2-1-8	4-1-8	6-1-8	8-3-0	9-1-8
0-10-8	2-1-8	2-0-0	2-0-0	2-1-8	0-10-8

Scale = 1:44.9

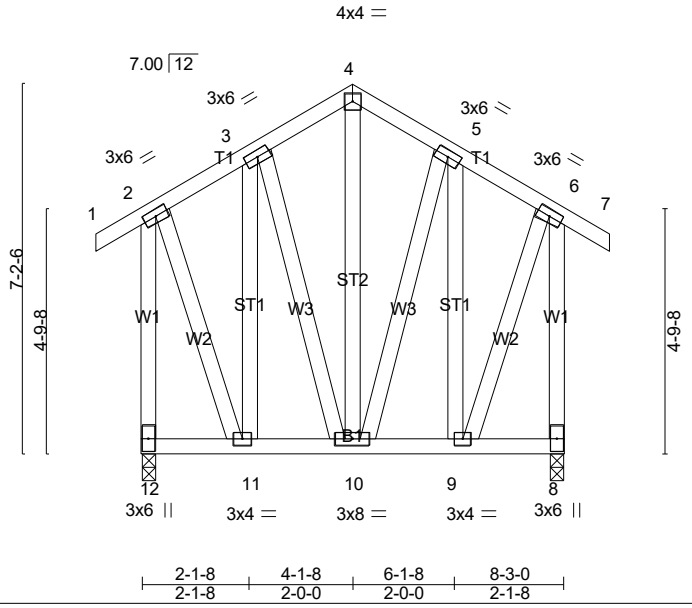

LOADING (psf)		**SPACING-** 2-0-0	**CSI.**		**DEFL.**	in	(loc)	l/defl	L/d	**PLATES**	**GRIP**
TCLL (roof)	20.0	Plate Grip DOL 1.15	TC	0.46	Vert(LL)	0.01	10	>999	240	MT20	244/190
Snow (Pf)	20.0	Lumber DOL 1.15	BC	0.08	Vert(CT)	-0.01	10	>999	180		
TCDL	10.0	Rep Stress Incr YES	WB	0.22	Horz(CT)	-0.00	8	n/a	n/a		
BCLL	0.0 *	Code IRC2021/TPI2014	Matrix-P							Weight: 100 lb	FT = 20%
BCDL	10.0										

LUMBER-
TOP CHORD 2x4 SP No.2
BOT CHORD 2x4 SP No.3
WEBS 2x4 SP No.3
OTHERS 2x4 SP No.3

BRACING-
TOP CHORD Structural wood sheathing directly applied or 6-0-0 oc purlins, except end verticals.
BOT CHORD Rigid ceiling directly applied or 10-0-0 oc bracing.

MiTek recommends that Stabilizers and required cross bracing be installed during truss erection, in accordance with Stabilizer Installation guide.

REACTIONS. (lb/size) 12=380/0-3-8 (min. 0-1-8), 8=380/0-3-8 (min. 0-1-8)
Max Horz 12=-187(LC 12)
Max Uplift12=-58(LC 10), 8=-58(LC 11)
Max Grav 12=500(LC 21), 8=500(LC 22)

FORCES. (lb) - Max. Comp./Max. Ten. - All forces 250 (lb) or less except when shown.
TOP CHORD 2-12=-482/441, 2-3=-164/283, 3-4=-164/329, 4-5=-164/329, 5-6=-164/283, 6-8=-482/441

NOTES- (12-15)
1) Unbalanced roof live loads have been considered for this design.
2) Wind: ASCE 7-16; Vult=120mph (3-second gust) Vasd=95mph; TCDL=5.0psf; BCDL=5.0psf; h=23ft; Cat. II; Exp B; Enclosed; MWFRS (envelope) gable end zone and C-C Corner(3E) zone; cantilever left and right exposed ; end vertical left and right exposed; porch left and right exposed;C-C for members and forces & MWFRS for reactions shown; Lumber DOL=1.60 plate grip DOL=1.60
3) Truss designed for wind loads in the plane of the truss only. For studs exposed to wind (normal to the face), see Standard Industry Gable End Details as applicable, or consult qualified building designer as per ANSI/TPI 1.
4) TCLL: ASCE 7-16; Pr=20.0 psf (roof LL: Lum DOL=1.15 Plate DOL=1.15); Pf=20.0 psf (Lum DOL=1.15 Plate DOL=1.15); Is=1.0; Rough Cat B; Partially Exp.; Ce=1.0; Cs=1.00; Ct=1.10
5) Unbalanced snow loads have been considered for this design.
6) This truss has been designed for greater of min roof live load of 12.0 psf or 2.00 times flat roof load of 20.0 psf on overhangs non-concurrent with other live loads.
7) Truss to be fully sheathed from one face or securely braced against lateral movement (i.e. diagonal web).
8) Gable studs spaced at 2-0-0 oc.
9) This truss has been designed for a 10.0 psf bottom chord live load nonconcurrent with any other live loads.
10) * This truss has been designed for a live load of 30.0psf on the bottom chord in all areas where a rectangle 3-6-0 tall by 1-0-0 wide will fit between the bottom chord and any other members.
11) Provide mechanical connection (by others) of truss to bearing plate capable of withstanding 100 lb uplift at joint(s) 12, 8.
12) Graphical bracing representation does not depict the size, type or the orientation of the brace on the member. Symbol only indicates that the member must be braced.
13) Bearing symbols are only graphical representations of a possible bearing condition. Bearing symbols are not considered in the structural design of the truss to support the loads indicated.
14) Web bracing shown is for lateral support of individual web members only. Refer to BCSI - Guide to Good Practice for Handling, Installing, Restraining & Bracing of Metal Plate Connected Wood Trusses for additional bracing guidelines, including diagonal bracing.
15) SEE BCSI-B3 SUMMARY SHEET- PERMANENT RESTRAING/BRACING OF CHORDS & WEB MEMBERS FOR RECOMMENDED MINIMUM BRACING REQUIREMENTS OF TOP CHORD, BOTTOM CHORD, AND WEB PLANES. IN ADDITION TO THESE MINIMUM GUIDELINES, ALWAYS CONSULT THE PROJECT ARCHITECT OR ENGINEER FOR ADDITIONAL BRACING CONSIDERATIONS.

NORTH CAROLINA PROFESSIONAL SEAL 28147 ENGINEER MARK K. MORRIS

1/15/2024

LOAD CASE(S) Standard

Warning! - Verify design parameters and read notes before use. This design is based only upon parameters shown, and is for an individual building component to be installed and loaded vertically. Applicability of design parameters and proper incorporation of component is responsibility of building designer – not truss designer or truss engineer. Bracing shown is for lateral support of individual web members only. Additional temporary bracing to ensure stability during construction is the responsibility of the erector. Additional permanent bracing of the overall structure is the responsibility of the building designer. For general guidance regarding fabrication, quality control, storage, delivery, erection and bracing, consult ANSI/TPI 1 *National Design Standard for Metal Plate Connected Wood Truss Construction* and BCSI 1-03 Guide to *Good Practice for Handling, Installing & Bracing of Metal Plate Connected Wood Trusses* from Truss Plate Institute, 583 D'Onofrio Drive, Madison, WI 53719.

Job	Truss	Truss Type	Qty	Ply	LOT 91 PROVIDENCE CREEK | 59 DAVINHALL DRIVE FUQUAY-VARINA, NC
24-0290-R01	R14	Common Supported Gable	1	1	Job Reference (optional) **# 44170**

Run: 8.430 s Feb 12 2021 Print: 8.430 s Feb 12 2021 MiTek Industries, Inc. Tue Jan 16 14:50:46 2024 Page 1
ID:1EhuSslMpTbkFHTWLa5hq6ypz0?-YZ5eBazY6rTr_Yxgn8z8d4n2hU5LI2ShQiMG9Czum7d

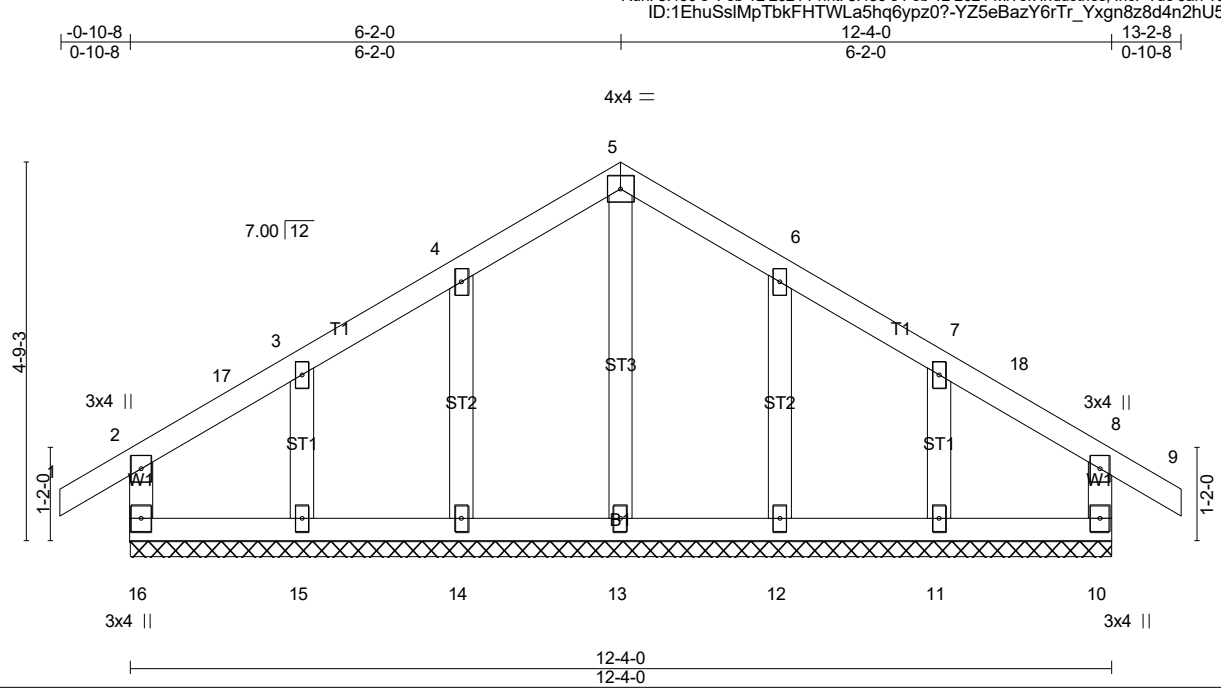

LOADING (psf)		SPACING-	2-0-0	CSI.		DEFL.	in	(loc)	l/defl	L/d	PLATES	GRIP
TCLL (roof)	20.0	Plate Grip DOL	1.15	TC	0.12	Vert(LL)	-0.00	9	n/r	180	MT20	244/190
Snow (Pf)	20.0	Lumber DOL	1.15	BC	0.07	Vert(CT)	-0.00	9	n/r	80		
TCDL	10.0	Rep Stress Incr	YES	WB	0.06	Horz(CT)	0.00	10	n/a	n/a		
BCLL	0.0 *	Code IRC2021/TPI2014		Matrix-R							Weight: 66 lb	FT = 20%
BCDL	10.0											

LUMBER-
TOP CHORD 2x4 SP No.2
BOT CHORD 2x4 SP No.3
WEBS 2x4 SP No.3
OTHERS 2x4 SP No.3

BRACING-
TOP CHORD Structural wood sheathing directly applied or 6-0-0 oc purlins, except end verticals.
BOT CHORD Rigid ceiling directly applied or 6-0-0 oc bracing.

MiTek recommends that Stabilizers and required cross bracing be installed during truss erection, in accordance with Stabilizer Installation guide.

REACTIONS. All bearings 12-4-0.
(lb) - Max Horz 16=-107(LC 12)
Max Uplift All uplift 100 lb or less at joint(s) 16, 10, 14, 15, 12, 11
Max Grav All reactions 250 lb or less at joint(s) 16, 10, 13, 14, 15, 12, 11

FORCES. (lb) - Max. Comp./Max. Ten. - All forces 250 (lb) or less except when shown.

NOTES- (14-17)
1) Unbalanced roof live loads have been considered for this design.
2) Wind: ASCE 7-16; Vult=120mph (3-second gust) Vasd=95mph; TCDL=5.0psf; BCDL=5.0psf; h=23ft; Cat. II; Exp B; Enclosed; MWFRS (envelope) gable end zone and C-C Corner(3E) -0-10-8 to 4-2-0, Corner(3R) 4-2-0 to 8-2-0, Corner(3E) 8-2-0 to 13-2-8 zone; cantilever left and right exposed ; end vertical left and right exposed;C-C for members and forces & MWFRS for reactions shown; Lumber DOL=1.60 plate grip DOL=1.60
3) Truss designed for wind loads in the plane of the truss only. For studs exposed to wind (normal to the face), see Standard Industry Gable End Details as applicable, or consult qualified building designer as per ANSI/TPI 1.
4) TCLL: ASCE 7-16; Pr=20.0 psf (roof LL: Lum DOL=1.15 Plate DOL=1.15); Pf=20.0 psf (Lum DOL=1.15 Plate DOL=1.15); Is=1.0; Rough Cat B; Partially Exp.; Ce=1.0; Cs=1.00; Ct=1.10
5) Unbalanced snow loads have been considered for this design.
6) This truss has been designed for greater of min roof live load of 12.0 psf or 2.00 times flat roof load of 20.0 psf on overhangs non-concurrent with other live loads.
7) All plates are 2x4 MT20 unless otherwise indicated.
8) Gable requires continuous bottom chord bearing.
9) Truss to be fully sheathed from one face or securely braced against lateral movement (i.e. diagonal web).
10) Gable studs spaced at 2-0-0 oc.
11) This truss has been designed for a 10.0 psf bottom chord live load nonconcurrent with any other live loads.
12) * This truss has been designed for a live load of 30.0psf on the bottom chord in all areas where a rectangle 3-6-0 tall by 1-0-0 wide will fit between the bottom chord and any other members.
13) Provide mechanical connection (by others) of truss to bearing plate capable of withstanding 100 lb uplift at joint(s) 16, 10, 14, 15, 12, 11.

NORTH CAROLINA PROFESSIONAL SEAL 28147 ENGINEER MARK K. MORRIS

1/15/2024

Continued on page 2

14) Graphical bracing representation does not depict the size, type or the orientation of the brace on the member. Symbol only indicates that the member must be braced.
15) Bearing symbols are only graphical representations of a possible bearing condition. Bearing symbols are not considered in the structural design of the truss to support the loads indicated.
16) Web bracing shown is for lateral support of individual web members only. Refer to BCSI - Guide to Good Practice for Handling, Installing, Restraining & Bracing of Metal Plate Connected Wood Trusses for additional bracing guidelines, including diagonal bracing.
17) SEE BCSI-B3 SUMMARY SHEET- PERMANENT RESTRAING/BRACING OF CHORDS & WEB MEMBERS FOR RECOMMENDED MINIMUM BRACING REQUIREMENTS OF TOP CHORD, BOTTOM CHORD, AND WEB PLANES. IN ADDITION TO THESE MINIMUM GUIDELINES, ALWAYS CONSULT THE PROJECT ARCHITECT OR ENGINEER FOR ADDITIONAL BRACING CONSIDERATIONS.

LOAD CASE(S) Standard

1/15/2024

Job	Truss	Truss Type	Qty	Ply	LOT 91 PROVIDENCE CREEK | 59 DAVINHALL DRIVE FUQUAY-VARINA, NC
24-0290-R01	R15	Common Girder	1	2	Job Reference (optional) **# 44170**

Run: 8.430 s Feb 12 2021 Print: 8.430 s Feb 12 2021 MiTek Industries, Inc. Tue Jan 16 14:50:47 2024 Page 1
ID:1EhuSslMpTbkFHTWLa5hq6ypz0?-0lf0PwzAs9biciWsLrVN9HK94uNaUPZrfL5qhezum7c

Scale = 1:30.6

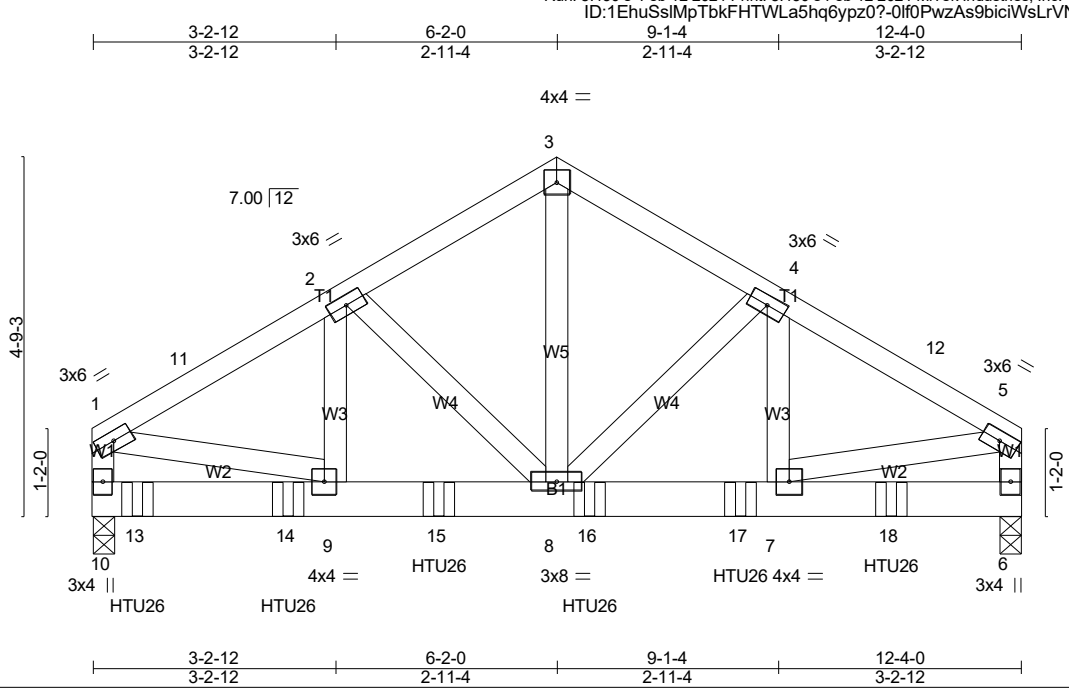

LOADING (psf)		SPACING- 2-0-0	CSI.		DEFL.	in	(loc)	l/defl	L/d	PLATES	GRIP
TCLL (roof)	20.0	Plate Grip DOL 1.15	TC	0.33	Vert(LL)	-0.02	8	>999	240	MT20	244/190
Snow (Pf)	20.0	Lumber DOL 1.15	BC	0.32	Vert(CT)	-0.03	8-9	>999	180		
TCDL	10.0	Rep Stress Incr NO	WB	0.39	Horz(CT)	0.01	6	n/a	n/a		
BCLL	0.0 *	Code IRC2021/TPI2014	Matrix-MSH							Weight: 168 lb	FT = 20%
BCDL	10.0										

LUMBER-
TOP CHORD 2x4 SP No.2
BOT CHORD 2x6 SP No.2
WEBS 2x4 SP No.3

BRACING-
TOP CHORD Structural wood sheathing directly applied or 6-0-0 oc purlins, except end verticals.
BOT CHORD Rigid ceiling directly applied or 10-0-0 oc bracing.

REACTIONS. (lb/size) 10=2351/0-3-8 (min. 0-1-8), 6=2027/0-3-8 (min. 0-1-8)
Max Horz 10=-93(LC 35)
Max Uplift10=-368(LC 12), 6=-313(LC 13)
Max Grav 10=2428(LC 18), 6=2104(LC 19)

FORCES. (lb) - Max. Comp./Max. Ten. - All forces 250 (lb) or less except when shown.
TOP CHORD 1-11=-2404/354, 2-11=-2345/363, 2-3=-1908/323, 3-4=-1908/323, 4-12=-2344/364, 5-12=-2402/354, 1-10=-1791/276, 5-6=-1794/277
BOT CHORD 9-15=-315/2026, 8-15=-315/2026, 8-16=-290/2025, 16-17=-290/2025, 7-17=-290/2025
WEBS 3-8=-274/1682, 4-8=-591/134, 4-7=-97/458, 2-8=-593/134, 2-9=-96/460, 1-9=-253/1849, 5-7=-256/1862

NOTES- (12-15)
1) 2-ply truss to be connected together with 10d (0.131"x3") nails as follows:
Top chords connected as follows: 2x4 - 1 row at 0-9-0 oc.
Bottom chords connected as follows: 2x6 - 2 rows staggered at 0-9-0 oc.
Webs connected as follows: 2x4 - 1 row at 0-9-0 oc.
2) All loads are considered equally applied to all plies, except if noted as front (F) or back (B) face in the LOAD CASE(S) section. Ply to ply connections have been provided to distribute only loads noted as (F) or (B), unless otherwise indicated.
3) Unbalanced roof live loads have been considered for this design.
4) Wind: ASCE 7-16; Vult=120mph (3-second gust) Vasd=95mph; TCDL=5.0psf; BCDL=5.0psf; h=23ft; Cat. II; Exp B; Enclosed; MWFRS (envelope) gable end zone; cantilever left and right exposed ; end vertical left and right exposed; Lumber DOL=1.60 plate grip DOL=1.60
5) TCLL: ASCE 7-16; Pr=20.0 psf (roof LL: Lum DOL=1.15 Plate DOL=1.15); Pf=20.0 psf (Lum DOL=1.15 Plate DOL=1.15); Is=1.0; Rough Cat B; Partially Exp.; Ce=1.0; Cs=1.00; Ct=1.10
6) Unbalanced snow loads have been considered for this design.
7) This truss has been designed for a 10.0 psf bottom chord live load nonconcurrent with any other live loads.
8) * This truss has been designed for a live load of 30.0psf on the bottom chord in all areas where a rectangle 3-6-0 tall by 1-0-0 wide will fit between the bottom chord and any other members.
9) Provide mechanical connection (by others) of truss to bearing plate capable of withstanding 100 lb uplift at joint(s) except (jt=lb) 10=368, 6=313.
10) Use Simpson Strong-Tie HTU26 (20-10d Girder, 11-10dx1 1/2 Truss, Single Ply Girder) or equivalent spaced at 2-0-0 oc max. starting at 0-7-4 from the left end to 10-7-4 to connect truss(es) R04 (1 ply 2x6 SP), R03 (1 ply 2x6 SP) to back face of bottom chord.
11) Fill all nail holes where hanger is in contact with lumber.

NORTH CAROLINA PROFESSIONAL SEAL 28147 ENGINEER MARK K. MORRIS

1/15/2024

Continued on page 2

12) Graphical bracing representation does not depict the size, type or the orientation of the brace on the member. Symbol only indicates that the member must be braced.
13) Bearing symbols are only graphical representations of a possible bearing condition. Bearing symbols are not considered in the structural design of the truss to support the loads indicated.
14) Web bracing shown is for lateral support of individual web members only. Refer to BCSI - Guide to Good Practice for Handling, Installing, Restraining & Bracing of Metal Plate Connected Wood Trusses for additional bracing guidelines, including diagonal bracing.
15) SEE BCSI-B3 SUMMARY SHEET- PERMANENT RESTRAING/BRACING OF CHORDS & WEB MEMBERS FOR RECOMMENDED MINIMUM BRACING REQUIREMENTS OF TOP CHORD, BOTTOM CHORD, AND WEB PLANES. IN ADDITION TO THESE MINIMUM GUIDELINES, ALWAYS CONSULT THE PROJECT ARCHITECT OR ENGINEER FOR ADDITIONAL BRACING CONSIDERATIONS.

LOAD CASE(S) Standard
1) Dead + Snow (balanced): Lumber Increase=1.15, Plate Increase=1.15
Uniform Loads (plf)
Vert: 1-3=-60, 3-5=-60, 6-10=-20
Concentrated Loads (lb)
Vert: 13=-574(B) 14=-568(B) 15=-568(B) 16=-568(B) 17=-568(B) 18=-568(B)

1/15/2024

Job	Truss	Truss Type	Qty	Ply	LOT 91 PROVIDENCE CREEK | 59 DAVINHALL DRIVE FUQUAY-VARINA, NC
24-0290-R01	R16	Hip Girder	1	1	Job Reference (optional) **# 44170**

Run: 8.430 s Feb 12 2021 Print: 8.430 s Feb 12 2021 MiTek Industries, Inc. Tue Jan 16 14:50:48 2024 Page 1
ID:1EhuSslMpTbkFHTWLa5hq6ypz0?-UxDOcG_odTjZEs52vZ0ciVsKMlksDuX_u?rND4zum7b

-0-10-8	2-0-0	6-0-0	10-0-0	12-0-0	12-10-8
0-10-8	2-0-0	4-0-0	4-0-0	2-0-0	0-10-8

Scale = 1:21.9

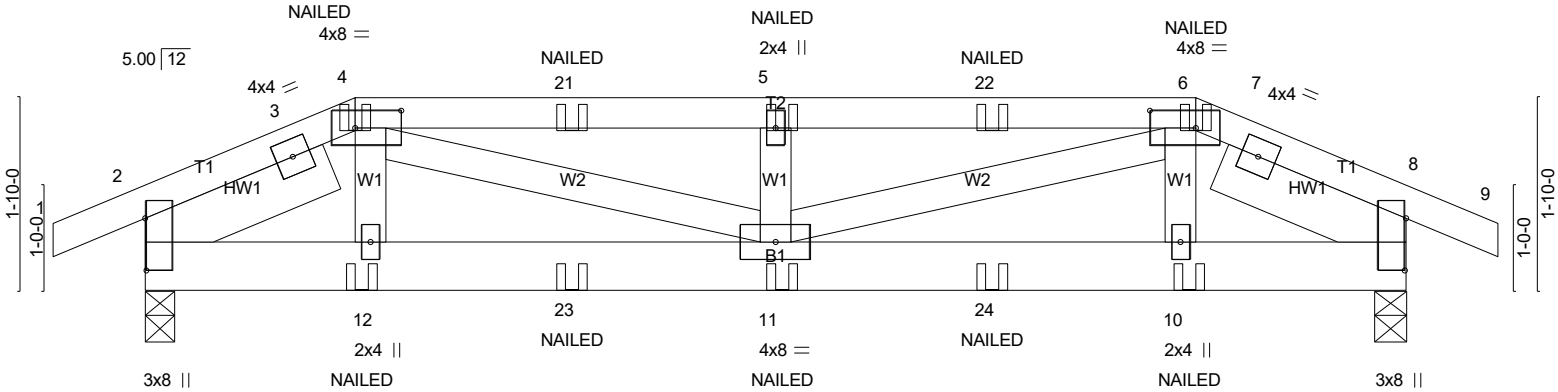

2-0-0	6-0-0	10-0-0	12-0-0
2-0-0	4-0-0	4-0-0	2-0-0

Plate Offsets (X,Y)-- [2:0-5-15,0-0-2], [4:0-5-4,0-2-0], [6:0-5-4,0-2-0], [8:0-5-15,0-0-2]

LOADING (psf)		**SPACING-** 2-0-0	**CSI.**	**DEFL.** in (loc) l/defl L/d	**PLATES**	**GRIP**
TCLL (roof)	20.0	Plate Grip DOL 1.15	TC 0.36	Vert(LL) -0.04 11 >999 240	MT20	244/190
Snow (Pf)	20.0	Lumber DOL 1.15	BC 0.25	Vert(CT) -0.06 11 >999 180		
TCDL	10.0	Rep Stress Incr NO	WB 0.28	Horz(CT) 0.00 2 n/a n/a		
BCLL	0.0 *	Code IRC2021/TPI2014	Matrix-MSH		Weight: 74 lb	FT = 20%
BCDL	10.0					

LUMBER-
TOP CHORD 2x4 SP No.2
BOT CHORD 2x6 SP No.2
WEBS 2x4 SP No.3
SLIDER Left 2x6 SP No.2 -° 1-11-0, Right 2x6 SP No.2 -° 1-11-0

BRACING-
TOP CHORD Structural wood sheathing directly applied or 4-7-14 oc purlins.
BOT CHORD Rigid ceiling directly applied or 10-0-0 oc bracing.

MiTek recommends that Stabilizers and required cross bracing be installed during truss erection, in accordance with Stabilizer Installation guide.

REACTIONS. (lb/size) 2=536/0-3-8 (min. 0-1-8), 8=536/0-3-8 (min. 0-1-8)
Max Horz 2=-16(LC 65)
Max Uplift2=-168(LC 8), 8=-168(LC 9)
Max Grav 2=603(LC 36), 8=603(LC 36)

FORCES. (lb) - Max. Comp./Max. Ten. - All forces 250 (lb) or less except when shown.
TOP CHORD 3-4=-865/229, 4-21=-1382/348, 5-21=-1382/348, 5-22=-1382/348, 6-22=-1382/348, 6-7=-865/229
BOT CHORD 2-12=-181/754, 12-23=-182/756, 11-23=-182/756, 11-24=-182/756, 10-24=-182/756, 8-10=-181/754
WEBS 4-11=-153/666, 5-11=-442/94, 6-11=-152/666

NOTES- (12-15)
1) Unbalanced roof live loads have been considered for this design.
2) Wind: ASCE 7-16; Vult=120mph (3-second gust) Vasd=95mph; TCDL=5.0psf; BCDL=5.0psf; h=23ft; Cat. II; Exp B; Enclosed; MWFRS (envelope) gable end zone; cantilever left and right exposed ; end vertical left and right exposed; porch left and right exposed; Lumber DOL=1.60 plate grip DOL=1.60
3) TCLL: ASCE 7-16; Pr=20.0 psf (roof LL: Lum DOL=1.15 Plate DOL=1.15); Pf=20.0 psf (Lum DOL=1.15 Plate DOL=1.15); Is=1.0; Rough Cat B; Partially Exp.; Ce=1.0; Cs=1.00; Ct=1.10
4) Unbalanced snow loads have been considered for this design.
5) This truss has been designed for greater of min roof live load of 12.0 psf or 2.00 times flat roof load of 20.0 psf on overhangs non-concurrent with other live loads.
6) Provide adequate drainage to prevent water ponding.
7) This truss has been designed for a 10.0 psf bottom chord live load nonconcurrent with any other live loads.
8) * This truss has been designed for a live load of 30.0psf on the bottom chord in all areas where a rectangle 3-6-0 tall by 1-0-0 wide will fit between the bottom chord and any other members.
9) Provide mechanical connection (by others) of truss to bearing plate capable of withstanding 100 lb uplift at joint(s) except (jt=lb) 2=168, 8=168.
10) "NAILED" indicates 3-10d (0.148"x3") or 3-12d (0.148"x3.25") toe-nails per NDS guidlines.
11) In the LOAD CASE(S) section, loads applied to the face of the truss are noted as front (F) or back (B).

NORTH CAROLINA PROFESSIONAL SEAL 28147 ENGINEER MARK K. MORRIS

1/15/2024

Continued on page 2

12) Graphical bracing representation does not depict the size, type or the orientation of the brace on the member. Symbol only indicates that the member must be braced.
13) Bearing symbols are only graphical representations of a possible bearing condition. Bearing symbols are not considered in the structural design of the truss to support the loads indicated.
14) Web bracing shown is for lateral support of individual web members only. Refer to BCSI - Guide to Good Practice for Handling, Installing, Restraining & Bracing of Metal Plate Connected Wood Trusses for additional bracing guidelines, including diagonal bracing.
15) SEE BCSI-B3 SUMMARY SHEET- PERMANENT RESTRAING/BRACING OF CHORDS & WEB MEMBERS FOR RECOMMENDED MINIMUM BRACING REQUIREMENTS OF TOP CHORD, BOTTOM CHORD, AND WEB PLANES. IN ADDITION TO THESE MINIMUM GUIDELINES, ALWAYS CONSULT THE PROJECT ARCHITECT OR ENGINEER FOR ADDITIONAL BRACING CONSIDERATIONS.

LOAD CASE(S) Standard
1) Dead + Snow (balanced): Lumber Increase=1.15, Plate Increase=1.15
Uniform Loads (plf)
Vert: 1-4=-60, 4-6=-60, 6-9=-60, 13-17=-20
Concentrated Loads (lb)
Vert: 4=-1(B) 6=-1(B) 12=0(B) 11=0(B) 5=-1(B) 10=0(B) 21=-1(B) 22=-1(B) 23=0(B) 24=0(B)

1/15/2024

Job	Truss	Truss Type	Qty	Ply	LOT 91 PROVIDENCE CREEK | 59 DAVINHALL DRIVE FUQUAY-VARINA, NC
24-0290-R01	R17	Hip	1	1	Job Reference (optional) **# 44170**

Run: 8.430 s Feb 12 2021 Print: 8.430 s Feb 12 2021 MiTek Industries, Inc. Tue Jan 16 14:50:48 2024 Page 1
ID:1EhuSslMpTbkFHTWLa5hq6ypz0?-UxDOcG_odTjZEs52vZ0ciVsKklimDvL_u?rND4zum7b

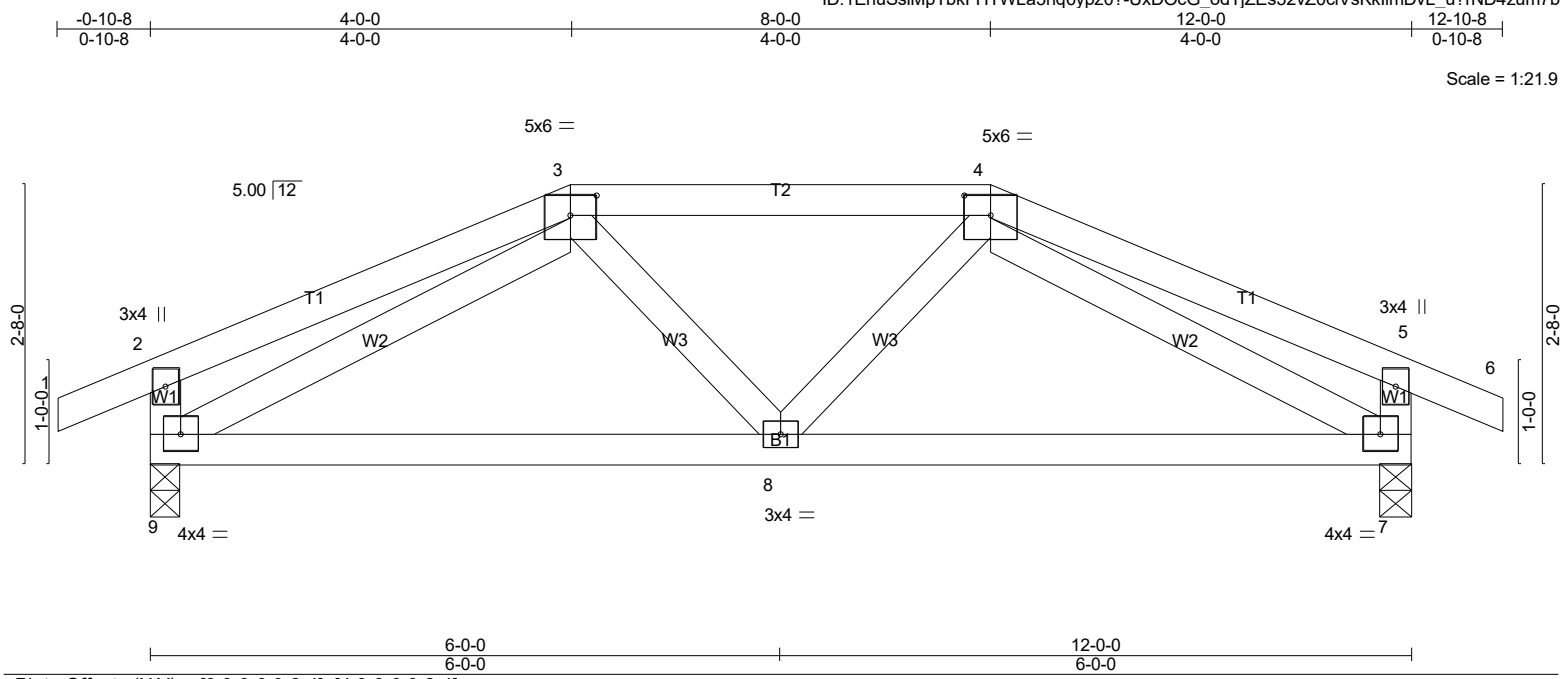

Plate Offsets (X,Y)-- [3:0-3-0,0-2-4], [4:0-3-0,0-2-4]

LOADING (psf)		**SPACING-** 2-0-0	**CSI.**	**DEFL.** in (loc) l/defl L/d	**PLATES**	**GRIP**
TCLL (roof)	20.0	Plate Grip DOL 1.15	TC 0.34	Vert(LL) 0.05 7-8 >999 240	MT20	244/190
Snow (Pf)	20.0	Lumber DOL 1.15	BC 0.32	Vert(CT) -0.05 7-8 >999 180		
TCDL	10.0	Rep Stress Incr YES	WB 0.22	Horz(CT) 0.01 7 n/a n/a		
BCLL	0.0 *	Code IRC2021/TPI2014	Matrix-AS		Weight: 63 lb	FT = 20%
BCDL	10.0					

LUMBER-
TOP CHORD 2x4 SP No.2
BOT CHORD 2x4 SP No.2
WEBS 2x4 SP No.3

BRACING-
TOP CHORD Structural wood sheathing directly applied, except end verticals.
BOT CHORD Rigid ceiling directly applied.

MiTek recommends that Stabilizers and required cross bracing be installed during truss erection, in accordance with Stabilizer Installation guide.

REACTIONS. (lb/size) 9=530/0-3-8 (min. 0-1-8), 7=530/0-3-8 (min. 0-1-8)
Max Horz 9=18(LC 13)
Max Uplift9=-136(LC 10), 7=-136(LC 11)
Max Grav 9=658(LC 39), 7=658(LC 39)

FORCES. (lb) - Max. Comp./Max. Ten. - All forces 250 (lb) or less except when shown.
TOP CHORD 2-3=-278/245, 3-4=-627/631, 4-5=-278/245, 2-9=-388/203, 5-7=-388/203
BOT CHORD 8-9=-402/608, 7-8=-402/608
WEBS 3-9=-541/309, 4-7=-541/309

NOTES- (11-14)
1) Unbalanced roof live loads have been considered for this design.
2) Wind: ASCE 7-16; Vult=120mph (3-second gust) Vasd=95mph; TCDL=5.0psf; BCDL=5.0psf; h=23ft; Cat. II; Exp B; Enclosed; MWFRS (envelope) gable end zone and C-C Exterior(2E) -0-10-8 to 4-0-0, Exterior(2R) 4-0-0 to 8-0-0, Exterior(2E) 8-0-0 to 12-10-8 zone; cantilever left and right exposed ; end vertical left and right exposed; porch left and right exposed;C-C for members and forces & MWFRS for reactions shown; Lumber DOL=1.60 plate grip DOL=1.60
3) TCLL: ASCE 7-16; Pr=20.0 psf (roof LL: Lum DOL=1.15 Plate DOL=1.15); Pf=20.0 psf (Lum DOL=1.15 Plate DOL=1.15); Is=1.0; Rough Cat B; Partially Exp.; Ce=1.0; Cs=1.00; Ct=1.10
4) Unbalanced snow loads have been considered for this design.
5) This truss has been designed for greater of min roof live load of 12.0 psf or 2.00 times flat roof load of 20.0 psf on overhangs non-concurrent with other live loads.
6) Provide adequate drainage to prevent water ponding.
7) This truss has been designed for a 10.0 psf bottom chord live load nonconcurrent with any other live loads.
8) * This truss has been designed for a live load of 30.0psf on the bottom chord in all areas where a rectangle 3-6-0 tall by 1-0-0 wide will fit between the bottom chord and any other members.
9) Provide mechanical connection (by others) of truss to bearing plate capable of withstanding 100 lb uplift at joint(s) except (jt=lb) 9=136, 7=136.
10) This truss design requires that a minimum of 7/16" structural wood sheathing be applied directly to the top chord and 1/2" gypsum sheetrock be applied directly to the bottom chord.

NORTH CAROLINA PROFESSIONAL SEAL 28147 ENGINEER MARK K. MORRIS

1/15/2024

Continued on page 2

11) Graphical bracing representation does not depict the size, type or the orientation of the brace on the member. Symbol only indicates that the member must be braced.
12) Bearing symbols are only graphical representations of a possible bearing condition. Bearing symbols are not considered in the structural design of the truss to support the loads indicated.
13) Web bracing shown is for lateral support of individual web members only. Refer to BCSI - Guide to Good Practice for Handling, Installing, Restraining & Bracing of Metal Plate Connected Wood Trusses for additional bracing guidelines, including diagonal bracing.
14) SEE BCSI-B3 SUMMARY SHEET- PERMANENT RESTRAING/BRACING OF CHORDS & WEB MEMBERS FOR RECOMMENDED MINIMUM BRACING REQUIREMENTS OF TOP CHORD, BOTTOM CHORD, AND WEB PLANES. IN ADDITION TO THESE MINIMUM GUIDELINES, ALWAYS CONSULT THE PROJECT ARCHITECT OR ENGINEER FOR ADDITIONAL BRACING CONSIDERATIONS.

LOAD CASE(S) Standard

1/15/2024

Job	Truss	Truss Type	Qty	Ply	LOT 91 PROVIDENCE CREEK | 59 DAVINHALL DRIVE FUQUAY-VARINA, NC
24-0290-R01	R18	Common	2	1	Job Reference (optional) **# 44170**

Run: 8.430 s Feb 12 2021 Print: 8.430 s Feb 12 2021 MiTek Industries, Inc. Tue Jan 16 14:50:49 2024 Page 1
ID:1EhuSslMpTbkFHTWLa5hq6ypz0?-y8nmqc?ROmrQs0gETGXrFiPSZi3myNw86faxmXzum7a

Scale = 1:23.4

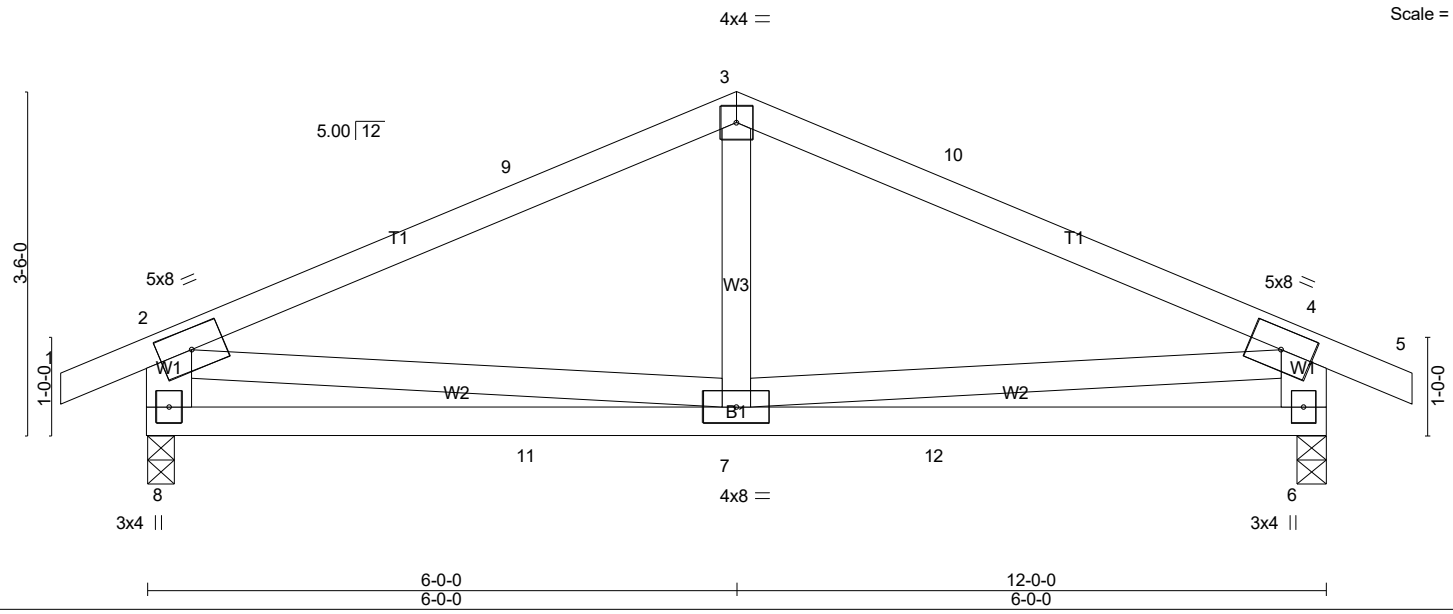

LOADING (psf)		SPACING-	2-0-0	CSI.		DEFL.	in	(loc)	l/defl	L/d	PLATES	GRIP
TCLL (roof)	20.0	Plate Grip DOL	1.15	TC	0.53	Vert(LL)	0.04	7-8	>999	240	MT20	244/190
Snow (Pf)	20.0	Lumber DOL	1.15	BC	0.27	Vert(CT)	-0.04	7-8	>999	180		
TCDL	10.0	Rep Stress Incr	YES	WB	0.14	Horz(CT)	0.00	6	n/a	n/a		
BCLL	0.0 *	Code IRC2021/TPI2014		Matrix-AS							Weight: 63 lb	FT = 20%
BCDL	10.0											

LUMBER-
TOP CHORD 2x4 SP No.2
BOT CHORD 2x4 SP No.2
WEBS 2x4 SP No.3 *Except*
W1: 2x6 SP No.2

BRACING-
TOP CHORD Structural wood sheathing directly applied, except end verticals.
BOT CHORD Rigid ceiling directly applied.

MiTek recommends that Stabilizers and required cross bracing be installed during truss erection, in accordance with Stabilizer Installation guide.

REACTIONS. (lb/size) 8=528/0-3-8 (min. 0-1-8), 6=528/0-3-8 (min. 0-1-8)
Max Horz 8=18(LC 14)
Max Uplift8=-118(LC 10), 6=-118(LC 11)
Max Grav 8=621(LC 21), 6=621(LC 22)

FORCES. (lb) - Max. Comp./Max. Ten. - All forces 250 (lb) or less except when shown.
TOP CHORD 2-9=-619/560, 3-9=-490/570, 3-10=-490/570, 4-10=-619/560, 2-8=-566/390, 4-6=-566/390
BOT CHORD 8-11=-216/379, 7-11=-216/379, 7-12=-216/379, 6-12=-216/379
WEBS 2-7=-201/334, 4-7=-201/334

NOTES- (10-13)
1) Unbalanced roof live loads have been considered for this design.
2) Wind: ASCE 7-16; Vult=120mph (3-second gust) Vasd=95mph; TCDL=5.0psf; BCDL=5.0psf; h=23ft; Cat. II; Exp B; Enclosed; MWFRS (envelope) gable end zone and C-C Exterior(2E) -0-10-8 to 3-11-2, Exterior(2R) 3-11-2 to 8-0-14, Exterior(2E) 8-0-14 to 12-10-8 zone; cantilever left and right exposed ; end vertical left and right exposed; porch left and right exposed;C-C for members and forces & MWFRS for reactions shown; Lumber DOL=1.60 plate grip DOL=1.60
3) TCLL: ASCE 7-16; Pr=20.0 psf (roof LL: Lum DOL=1.15 Plate DOL=1.15); Pf=20.0 psf (Lum DOL=1.15 Plate DOL=1.15); Is=1.0; Rough Cat B; Partially Exp.; Ce=1.0; Cs=1.00; Ct=1.10
4) Unbalanced snow loads have been considered for this design.
5) This truss has been designed for greater of min roof live load of 12.0 psf or 2.00 times flat roof load of 20.0 psf on overhangs non-concurrent with other live loads.
6) This truss has been designed for a 10.0 psf bottom chord live load nonconcurrent with any other live loads.
7) * This truss has been designed for a live load of 30.0psf on the bottom chord in all areas where a rectangle 3-6-0 tall by 1-0-0 wide will fit between the bottom chord and any other members.
8) Provide mechanical connection (by others) of truss to bearing plate capable of withstanding 100 lb uplift at joint(s) except (jt=lb) 8=118, 6=118.
9) This truss design requires that a minimum of 7/16" structural wood sheathing be applied directly to the top chord and 1/2" gypsum sheetrock be applied directly to the bottom chord.
10) Graphical bracing representation does not depict the size, type or the orientation of the brace on the member. Symbol only indicates that the member must be braced.
11) Bearing symbols are only graphical representations of a possible bearing condition. Bearing symbols are not considered in the structural design of the truss to support the loads indicated.
12) Web bracing shown is for lateral support of individual web members only. Refer to BCSI - Guide to Good Practice for Handling, Installing, Restraining & Bracing of Metal Plate Connected Wood Trusses for additional bracing guidelines, including diagonal bracing.
13) SEE BCSI-B3 SUMMARY SHEET- PERMANENT RESTRAING/BRACING OF CHORDS & WEB MEMBERS FOR RECOMMENDED MINIMUM BRACING REQUIREMENTS OF TOP CHORD, BOTTOM CHORD, AND WEB PLANES. IN ADDITION TO THESE MINIMUM GUIDELINES, ALWAYS CONSULT THE PROJECT ARCHITECT OR ENGINEER FOR ADDITIONAL BRACING CONSIDERATIONS.

NORTH CAROLINA PROFESSIONAL SEAL 28147 ENGINEER MARK K. MORRIS

1/15/2024

Continued on page 2

LOAD CASE(S) Standard

1/15/2024

Job	Truss	Truss Type	Qty	Ply	LOT 91 PROVIDENCE CREEK | 59 DAVINHALL DRIVE FUQUAY-VARINA, NC
24-0290-R01	R19	Common	1	1	Job Reference (optional) **# 44170**

Run: 8.430 s Feb 12 2021 Print: 8.430 s Feb 12 2021 MiTek Industries, Inc. Tue Jan 16 14:50:49 2024 Page 1
ID:1EhuSslMpTbkFHTWLa5hq6ypz0?-y8nmqc?ROmrQs0gETGXrFiPTWi3oyNn86faxmXzum7a

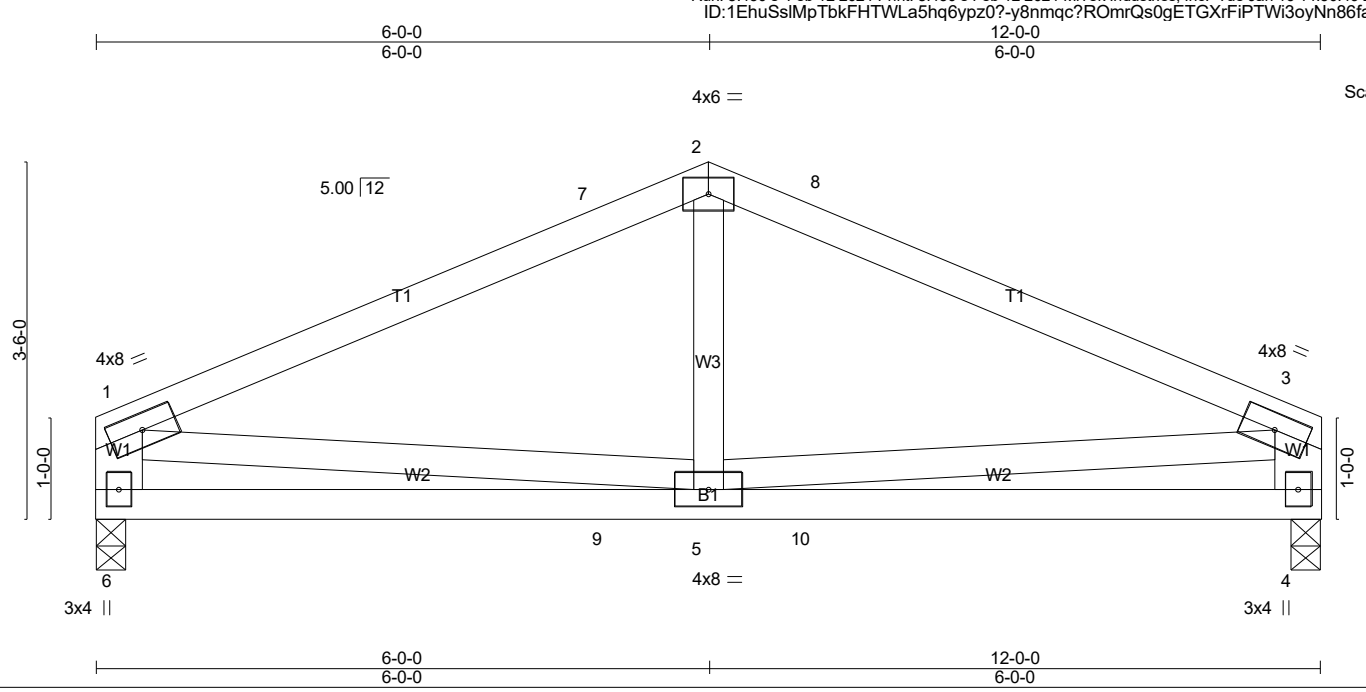

LOADING (psf)		**SPACING-** 2-0-0	**CSI.**		**DEFL.**	in	(loc)	l/defl	L/d	**PLATES**	**GRIP**
TCLL (roof)	20.0	Plate Grip DOL 1.15	TC	0.47	Vert(LL)	0.04	5-6	>999	240	MT20	244/190
Snow (Pf)	20.0	Lumber DOL 1.15	BC	0.27	Vert(CT)	-0.04	5-6	>999	180		
TCDL	10.0	Rep Stress Incr YES	WB	0.15	Horz(CT)	0.00	4	n/a	n/a		
BCLL	0.0 *	Code IRC2021/TPI2014	Matrix-AS							Weight: 61 lb	FT = 20%
BCDL	10.0										

LUMBER-
TOP CHORD 2x4 SP No.2
BOT CHORD 2x4 SP No.2
WEBS 2x4 SP No.3 *Except*
W1: 2x6 SP No.2

BRACING-
TOP CHORD Structural wood sheathing directly applied, except end verticals.
BOT CHORD Rigid ceiling directly applied.

MiTek recommends that Stabilizers and required cross bracing be installed during truss erection, in accordance with Stabilizer Installation guide.

REACTIONS. (lb/size) 6=462/0-3-8 (min. 0-1-8), 4=462/0-3-8 (min. 0-1-8)
Max Horz 6=18(LC 11)
Max Uplift6=-93(LC 10), 4=-93(LC 11)
Max Grav 6=553(LC 20), 4=553(LC 21)

FORCES. (lb) - Max. Comp./Max. Ten. - All forces 250 (lb) or less except when shown.
TOP CHORD 1-7=-627/538, 2-7=-488/549, 2-8=-488/549, 3-8=-627/538, 1-6=-498/326, 3-4=-498/326
BOT CHORD 6-9=-207/325, 5-9=-207/325, 5-10=-207/325, 4-10=-207/325
WEBS 1-5=-220/356, 3-5=-220/356

NOTES- (9-12)
1) Unbalanced roof live loads have been considered for this design.
2) Wind: ASCE 7-16; Vult=120mph (3-second gust) Vasd=95mph; TCDL=5.0psf; BCDL=5.0psf; h=23ft; Cat. II; Exp B; Enclosed; MWFRS (envelope) gable end zone and C-C Exterior(2E) 0-2-12 to 5-0-6, Exterior(2R) 5-0-6 to 6-11-10, Exterior(2E) 6-11-10 to 11-9-4 zone; cantilever left and right exposed ; end vertical left and right exposed; porch left and right exposed;C-C for members and forces & MWFRS for reactions shown; Lumber DOL=1.60 plate grip DOL=1.60
3) TCLL: ASCE 7-16; Pr=20.0 psf (roof LL: Lum DOL=1.15 Plate DOL=1.15); Pf=20.0 psf (Lum DOL=1.15 Plate DOL=1.15); Is=1.0; Rough Cat B; Partially Exp.; Ce=1.0; Cs=1.00; Ct=1.10
4) Unbalanced snow loads have been considered for this design.
5) This truss has been designed for a 10.0 psf bottom chord live load nonconcurrent with any other live loads.
6) * This truss has been designed for a live load of 30.0psf on the bottom chord in all areas where a rectangle 3-6-0 tall by 1-0-0 wide will fit between the bottom chord and any other members.
7) Provide mechanical connection (by others) of truss to bearing plate capable of withstanding 100 lb uplift at joint(s) 6, 4.
8) This truss design requires that a minimum of 7/16" structural wood sheathing be applied directly to the top chord and 1/2" gypsum sheetrock be applied directly to the bottom chord.
9) Graphical bracing representation does not depict the size, type or the orientation of the brace on the member. Symbol only indicates that the member must be braced.
10) Bearing symbols are only graphical representations of a possible bearing condition. Bearing symbols are not considered in the structural design of the truss to support the loads indicated.
11) Web bracing shown is for lateral support of individual web members only. Refer to BCSI - Guide to Good Practice for Handling, Installing, Restraining & Bracing of Metal Plate Connected Wood Trusses for additional bracing guidelines, including diagonal bracing.
12) SEE BCSI-B3 SUMMARY SHEET- PERMANENT RESTRAING/BRACING OF CHORDS & WEB MEMBERS FOR RECOMMENDED MINIMUM BRACING REQUIREMENTS OF TOP CHORD, BOTTOM CHORD, AND WEB PLANES. IN ADDITION TO THESE MINIMUM GUIDELINES, ALWAYS CONSULT THE PROJECT ARCHITECT OR ENGINEER FOR ADDITIONAL BRACING CONSIDERATIONS.

NORTH CAROLINA PROFESSIONAL SEAL 28147 ENGINEER MARK K. MORRIS

LOAD CASE(S) Standard

1/15/2024

Job	Truss	Truss Type	Qty	Ply	LOT 91 PROVIDENCE CREEK | 59 DAVINHALL DRIVE FUQUAY-VARINA, NC
24-0290-R01	V01	Valley	1	1	Job Reference (optional) **# 44170**

Run: 8.430 s Feb 12 2021 Print: 8.430 s Feb 12 2021 MiTek Industries, Inc. Tue Jan 16 14:50:50 2024 Page 1
ID:1EhuSslMpTbkFHTWLa5hq6ypz0?-QKL81y0394zHTAFR0_24nwyhz5N2hn3HLJKUIzzum7Z

16-2-4 | 27-4-11 | 28-3-3
16-2-4 | 11-2-7 | 0-10-8

Scale = 1:57.0

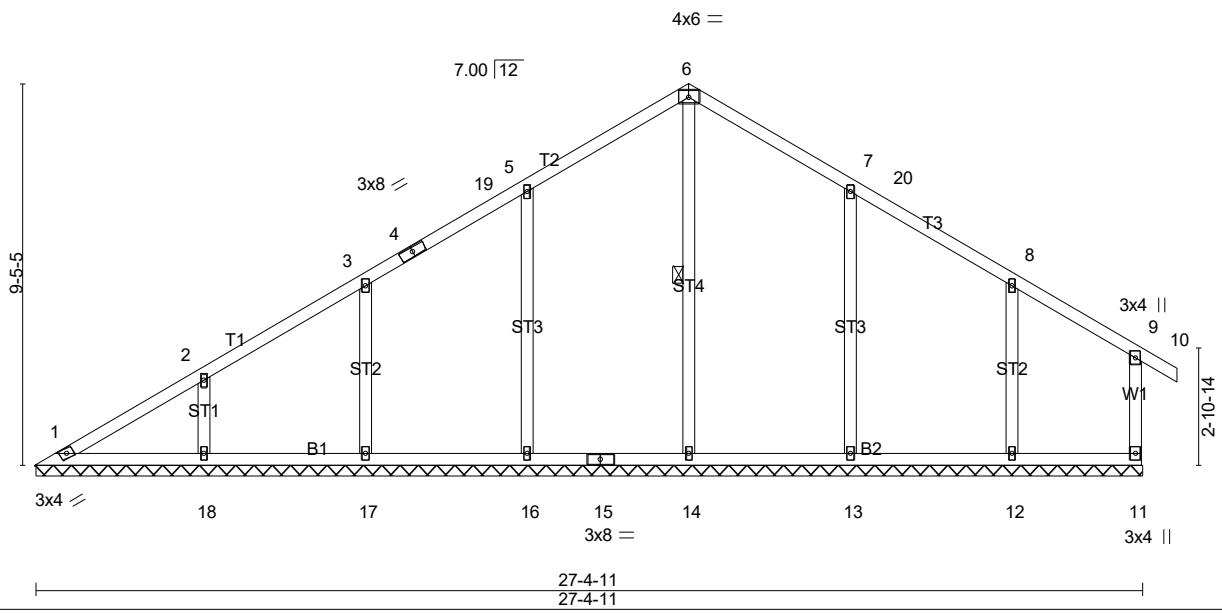

LOADING (psf)		**SPACING-** 2-0-0	**CSI.**		**DEFL.**	in	(loc)	l/defl	L/d	**PLATES**	**GRIP**
TCLL (roof)	20.0	Plate Grip DOL 1.15	TC	0.29	Vert(LL)	0.00	9	n/r	180	MT20	244/190
Snow (Pf)	20.0	Lumber DOL 1.15	BC	0.40	Vert(CT)	-0.00	9	n/r	80		
TCDL	10.0	Rep Stress Incr YES	WB	0.34	Horz(CT)	-0.00	11	n/a	n/a		
BCLL	0.0 *	Code IRC2021/TPI2014	Matrix-S							Weight: 140 lb	FT = 20%
BCDL	10.0										

LUMBER-
TOP CHORD 2x4 SP No.2
BOT CHORD 2x4 SP No.3
WEBS 2x4 SP No.3
OTHERS 2x4 SP No.3

BRACING-
TOP CHORD Structural wood sheathing directly applied or 6-0-0 oc purlins, except end verticals.
BOT CHORD Rigid ceiling directly applied or 6-0-0 oc bracing.
WEBS 1 Row at midpt 6-14

MiTek recommends that Stabilizers and required cross bracing be installed during truss erection, in accordance with Stabilizer Installation guide.

REACTIONS. All bearings 27-4-11.
(lb) - Max Horz 1=210(LC 13)
Max Uplift All uplift 100 lb or less at joint(s) 11, 1, 16, 17, 18, 13, 12
Max Grav All reactions 250 lb or less at joint(s) 11, 1 except 14=495(LC 24), 16=574(LC 5), 17=404(LC 24), 18=347(LC 21), 13=577(LC 6), 12=390(LC 25)

FORCES. (lb) - Max. Comp./Max. Ten. - All forces 250 (lb) or less except when shown.
WEBS 5-16=-372/133, 2-18=-258/128, 7-13=-377/133

NOTES- (11-14)
1) Unbalanced roof live loads have been considered for this design.
2) Wind: ASCE 7-16; Vult=120mph (3-second gust) Vasd=95mph; TCDL=5.0psf; BCDL=5.0psf; h=23ft; Cat. II; Exp B; Enclosed; MWFRS (envelope) gable end zone and C-C Exterior(2E) 0-6-8 to 5-4-1, Interior(1) 5-4-1 to 11-4-10, Exterior(2R) 11-4-10 to 20-11-14, Interior(1) 20-11-14 to 23-5-10, Exterior(2E) 23-5-10 to 28-3-3 zone; cantilever left and right exposed ; end vertical left and right exposed;C-C for members and forces & MWFRS for reactions shown; Lumber DOL=1.60 plate grip DOL=1.60
3) TCLL: ASCE 7-16; Pr=20.0 psf (roof LL: Lum DOL=1.15 Plate DOL=1.15); Pf=20.0 psf (Lum DOL=1.15 Plate DOL=1.15); Is=1.0; Rough Cat B; Partially Exp.; Ce=1.0; Cs=1.00; Ct=1.10
4) Unbalanced snow loads have been considered for this design.
5) This truss has been designed for greater of min roof live load of 12.0 psf or 2.00 times flat roof load of 20.0 psf on overhangs non-concurrent with other live loads.
6) All plates are 2x4 MT20 unless otherwise indicated.
7) Gable requires continuous bottom chord bearing.
8) This truss has been designed for a 10.0 psf bottom chord live load nonconcurrent with any other live loads.
9) * This truss has been designed for a live load of 30.0psf on the bottom chord in all areas where a rectangle 3-6-0 tall by 1-0-0 wide will fit between the bottom chord and any other members, with BCDL = 10.0psf.
10) Provide mechanical connection (by others) of truss to bearing plate capable of withstanding 100 lb uplift at joint(s) 11, 1, 16, 17, 18, 13, 12.

NORTH CAROLINA PROFESSIONAL SEAL 28147 ENGINEER MARK K. MORRIS

1/15/2024

Continued on page 2

11) Graphical bracing representation does not depict the size, type or the orientation of the brace on the member. Symbol only indicates that the member must be braced.
12) Bearing symbols are only graphical representations of a possible bearing condition. Bearing symbols are not considered in the structural design of the truss to support the loads indicated.
13) Web bracing shown is for lateral support of individual web members only. Refer to BCSI - Guide to Good Practice for Handling, Installing, Restraining & Bracing of Metal Plate Connected Wood Trusses for additional bracing guidelines, including diagonal bracing.
14) SEE BCSI-B3 SUMMARY SHEET- PERMANENT RESTRAING/BRACING OF CHORDS & WEB MEMBERS FOR RECOMMENDED MINIMUM BRACING REQUIREMENTS OF TOP CHORD, BOTTOM CHORD, AND WEB PLANES. IN ADDITION TO THESE MINIMUM GUIDELINES, ALWAYS CONSULT THE PROJECT ARCHITECT OR ENGINEER FOR ADDITIONAL BRACING CONSIDERATIONS.

LOAD CASE(S) Standard

1/15/2024

Job	Truss	Truss Type	Qty	Ply	LOT 91 PROVIDENCE CREEK | 59 DAVINHALL DRIVE FUQUAY-VARINA, NC
24-0290-R01	V02	Valley	1	1	Job Reference (optional) **# 44170**

Run: 8.430 s Feb 12 2021 Print: 8.430 s Feb 12 2021 MiTek Industries, Inc. Tue Jan 16 14:50:50 2024 Page 1
ID:1EhuSslMpTbkFHTWLa5hq6ypz0?-QKL81y0394zHTAFR0_24nwyh_5N6hoFHLJKUIzzum7Z

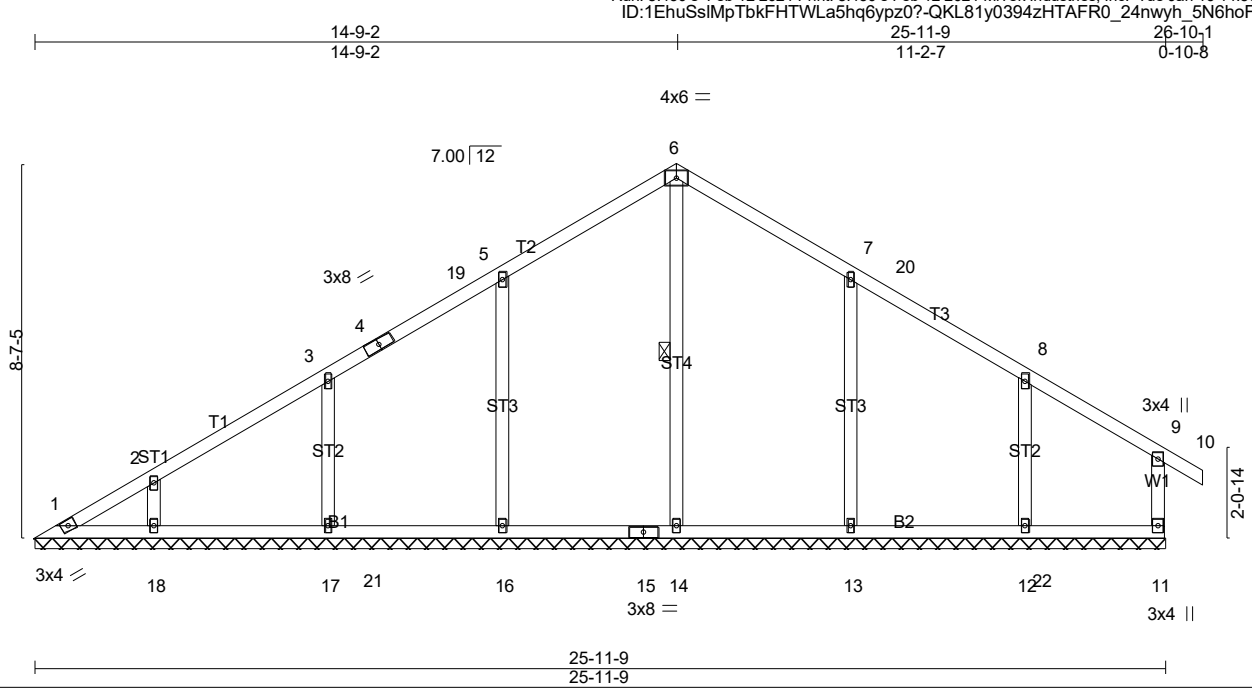

LOADING (psf)		SPACING- 2-0-0	CSI.		DEFL.	in	(loc)	l/defl	L/d	PLATES	GRIP
TCLL (roof)	20.0	Plate Grip DOL 1.15	TC	0.29	Vert(LL)	-0.00	9	n/r	180	MT20	244/190
Snow (Pf)	20.0	Lumber DOL 1.15	BC	0.40	Vert(CT)	-0.00	9	n/r	80		
TCDL	10.0	Rep Stress Incr YES	WB	0.26	Horz(CT)	-0.00	11	n/a	n/a		
BCLL	0.0 *	Code IRC2021/TPI2014	Matrix-S							Weight: 127 lb	FT = 20%
BCDL	10.0										

LUMBER-
TOP CHORD 2x4 SP No.2
BOT CHORD 2x4 SP No.3
WEBS 2x4 SP No.3
OTHERS 2x4 SP No.3

BRACING-
TOP CHORD Structural wood sheathing directly applied or 6-0-0 oc purlins, except end verticals.
BOT CHORD Rigid ceiling directly applied or 6-0-0 oc bracing.
WEBS 1 Row at midpt 6-14

MiTek recommends that Stabilizers and required cross bracing be installed during truss erection, in accordance with Stabilizer Installation guide.

REACTIONS. All bearings 25-11-9.
(lb) - Max Horz 1=185(LC 13)
Max Uplift All uplift 100 lb or less at joint(s) 11, 1, 16, 17, 18, 13, 12
Max Grav All reactions 250 lb or less at joint(s) 11, 1 except 14=488(LC 24), 16=570(LC 5), 17=404(LC 24), 18=285(LC 21), 13=577(LC 6), 12=376(LC 25)

FORCES. (lb) - Max. Comp./Max. Ten. - All forces 250 (lb) or less except when shown.
WEBS 5-16=-370/132, 7-13=-377/133

NOTES- (11-14)
1) Unbalanced roof live loads have been considered for this design.
2) Wind: ASCE 7-16; Vult=120mph (3-second gust) Vasd=95mph; TCDL=5.0psf; BCDL=5.0psf; h=23ft; Cat. II; Exp B; Enclosed; MWFRS (envelope) gable end zone and C-C Exterior(2E) 0-6-8 to 5-4-1, Interior(1) 5-4-1 to 9-11-8, Exterior(2R) 9-11-8 to 19-6-11, Interior(1) 19-6-11 to 22-0-8, Exterior(2E) 22-0-8 to 26-10-1 zone; cantilever left and right exposed ; end vertical left and right exposed;C-C for members and forces & MWFRS for reactions shown; Lumber DOL=1.60 plate grip DOL=1.60
3) TCLL: ASCE 7-16; Pr=20.0 psf (roof LL: Lum DOL=1.15 Plate DOL=1.15); Pf=20.0 psf (Lum DOL=1.15 Plate DOL=1.15); Is=1.0; Rough Cat B; Partially Exp.; Ce=1.0; Cs=1.00; Ct=1.10
4) Unbalanced snow loads have been considered for this design.
5) This truss has been designed for greater of min roof live load of 12.0 psf or 2.00 times flat roof load of 20.0 psf on overhangs non-concurrent with other live loads.
6) All plates are 2x4 MT20 unless otherwise indicated.
7) Gable requires continuous bottom chord bearing.
8) This truss has been designed for a 10.0 psf bottom chord live load nonconcurrent with any other live loads.
9) * This truss has been designed for a live load of 30.0psf on the bottom chord in all areas where a rectangle 3-6-0 tall by 1-0-0 wide will fit between the bottom chord and any other members, with BCDL = 10.0psf.
10) Provide mechanical connection (by others) of truss to bearing plate capable of withstanding 100 lb uplift at joint(s) 11, 1, 16, 17, 18, 13, 12.

NORTH CAROLINA PROFESSIONAL SEAL 28147 ENGINEER MARK K. MORRIS

1/15/2024

Continued on page 2

11) Graphical bracing representation does not depict the size, type or the orientation of the brace on the member. Symbol only indicates that the member must be braced.
12) Bearing symbols are only graphical representations of a possible bearing condition. Bearing symbols are not considered in the structural design of the truss to support the loads indicated.
13) Web bracing shown is for lateral support of individual web members only. Refer to BCSI - Guide to Good Practice for Handling, Installing, Restraining & Bracing of Metal Plate Connected Wood Trusses for additional bracing guidelines, including diagonal bracing.
14) SEE BCSI-B3 SUMMARY SHEET- PERMANENT RESTRAING/BRACING OF CHORDS & WEB MEMBERS FOR RECOMMENDED MINIMUM BRACING REQUIREMENTS OF TOP CHORD, BOTTOM CHORD, AND WEB PLANES. IN ADDITION TO THESE MINIMUM GUIDELINES, ALWAYS CONSULT THE PROJECT ARCHITECT OR ENGINEER FOR ADDITIONAL BRACING CONSIDERATIONS.

LOAD CASE(S) Standard

1/15/2024

Job	Truss	Truss Type	Qty	Ply	LOT 91 PROVIDENCE CREEK | 59 DAVINHALL DRIVE FUQUAY-VARINA, NC
24-0290-R01	V03	Valley	1	1	Job Reference (optional) **# 44170**

Run: 8.430 s Feb 12 2021 Print: 8.430 s Feb 12 2021 MiTek Industries, Inc. Tue Jan 16 14:50:51 2024 Page 1
ID:1EhuSslMpTbkFHTWLa5hq6ypz0?-vWvXFH1hwO575JqdahZJK7UrmVkhQGqRaz31qPzum7Y

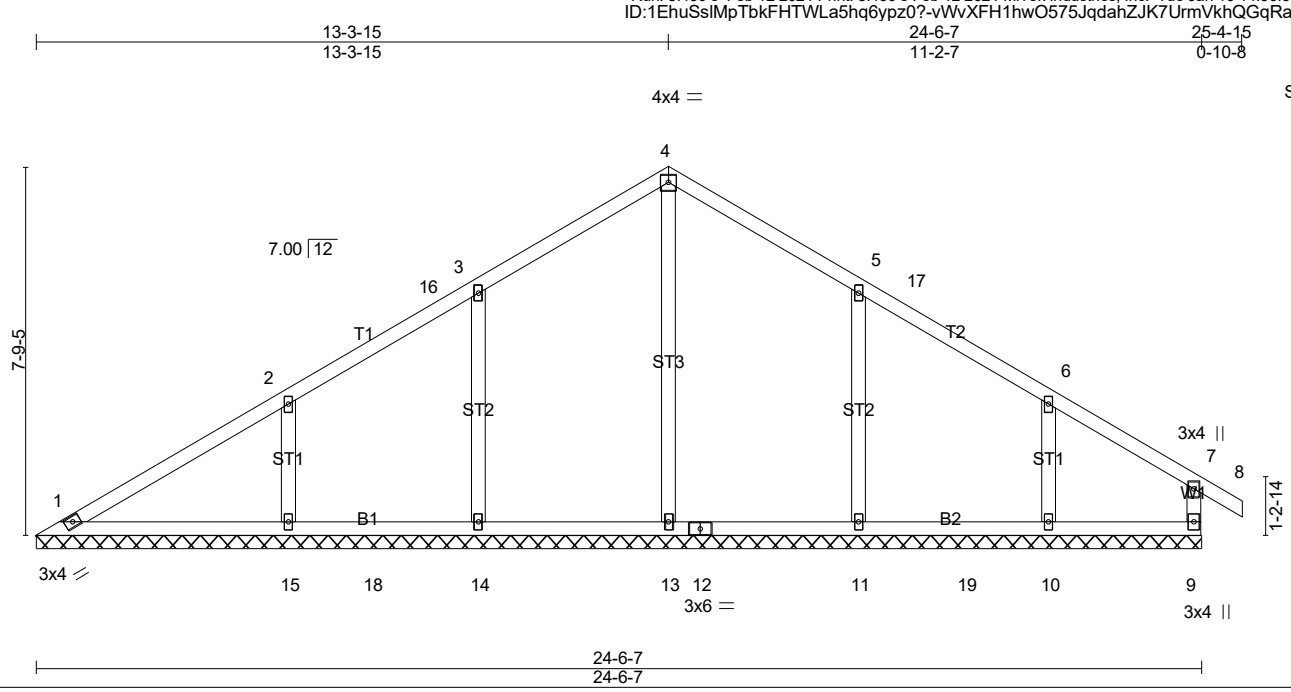

LOADING (psf)		SPACING- 2-0-0	CSI.	DEFL. in (loc) l/defl L/d	PLATES GRIP
TCLL (roof)	20.0	Plate Grip DOL 1.15	TC 0.29	Vert(LL) -0.00 7 n/r 180	MT20 244/190
Snow (Pf)	20.0	Lumber DOL 1.15	BC 0.37	Vert(CT) -0.00 8 n/r 80	
TCDL	10.0	Rep Stress Incr YES	WB 0.24	Horz(CT) 0.00 9 n/a n/a	
BCLL	0.0 *	Code IRC2021/TPI2014	Matrix-S		Weight: 114 lb FT = 20%
BCDL	10.0				

LUMBER-
TOP CHORD 2x4 SP No.2
BOT CHORD 2x4 SP No.3
WEBS 2x4 SP No.3
OTHERS 2x4 SP No.3

BRACING-
TOP CHORD Structural wood sheathing directly applied or 6-0-0 oc purlins, except end verticals.
BOT CHORD Rigid ceiling directly applied or 6-0-0 oc bracing.

MiTek recommends that Stabilizers and required cross bracing be installed during truss erection, in accordance with Stabilizer Installation guide.

REACTIONS. All bearings 24-6-7.
(lb) - Max Horz 1=160(LC 13)
Max Uplift All uplift 100 lb or less at joint(s) 1, 9, 14, 11, 10 except 15=-105(LC 14)
Max Grav All reactions 250 lb or less at joint(s) 1, 9 except 13=484(LC 27), 14=529(LC 5), 15=431(LC 24), 11=558(LC 6), 10=320(LC 25)

FORCES. (lb) - Max. Comp./Max. Ten. - All forces 250 (lb) or less except when shown.
WEBS 3-14=-353/125, 2-15=-300/148, 5-11=-377/133

NOTES- (11-14)
1) Unbalanced roof live loads have been considered for this design.
2) Wind: ASCE 7-16; Vult=120mph (3-second gust) Vasd=95mph; TCDL=5.0psf; BCDL=5.0psf; h=23ft; Cat. II; Exp B; Enclosed; MWFRS (envelope) gable end zone and C-C Exterior(2E) 0-6-8 to 5-3-15, Interior(1) 5-3-15 to 8-6-6, Exterior(2R) 8-6-6 to 18-1-9, Interior(1) 18-1-9 to 20-7-5, Exterior(2E) 20-7-5 to 25-4-15 zone; cantilever left and right exposed ; end vertical left and right exposed;C-C for members and forces & MWFRS for reactions shown; Lumber DOL=1.60 plate grip DOL=1.60
3) TCLL: ASCE 7-16; Pr=20.0 psf (roof LL: Lum DOL=1.15 Plate DOL=1.15); Pf=20.0 psf (Lum DOL=1.15 Plate DOL=1.15); Is=1.0; Rough Cat B; Partially Exp.; Ce=1.0; Cs=1.00; Ct=1.10
4) Unbalanced snow loads have been considered for this design.
5) This truss has been designed for greater of min roof live load of 12.0 psf or 2.00 times flat roof load of 20.0 psf on overhangs non-concurrent with other live loads.
6) All plates are 2x4 MT20 unless otherwise indicated.
7) Gable requires continuous bottom chord bearing.
8) This truss has been designed for a 10.0 psf bottom chord live load nonconcurrent with any other live loads.
9) * This truss has been designed for a live load of 30.0psf on the bottom chord in all areas where a rectangle 3-6-0 tall by 1-0-0 wide will fit between the bottom chord and any other members, with BCDL = 10.0psf.
10) Provide mechanical connection (by others) of truss to bearing plate capable of withstanding 100 lb uplift at joint(s) 1, 9, 14, 11, 10 except (jt=lb) 15=105.
11) Graphical bracing representation does not depict the size, type or the orientation of the brace on the member. Symbol only indicates that the member must be braced.
12) Bearing symbols are only graphical representations of a possible bearing condition. Bearing symbols are not considered in the structural design of the truss to support the loads indicated.
13) Web bracing shown is for lateral support of individual web members only. Refer to BCSI - Guide to Good Practice for Handling, Installing, Restraining & Bracing of Metal Plate Connected Wood Trusses for additional bracing guidelines, including diagonal bracing.
14) SEE BCSI-B3 SUMMARY SHEET- PERMANENT RESTRAING/BRACING OF CHORDS & WEB MEMBERS FOR RECOMMENDED MINIMUM BRACING REQUIREMENTS OF TOP CHORD, BOTTOM CHORD, AND WEB PLANES. IN ADDITION TO THESE MINIMUM GUIDELINES, ALWAYS CONSULT THE PROJECT ARCHITECT OR ENGINEER FOR ADDITIONAL BRACING CONSIDERATIONS.

NORTH CAROLINA PROFESSIONAL SEAL 28147 ENGINEER MARK K. MORRIS

1/15/2024

Continued on page 2

LOAD CASE(S) Standard

1/15/2024

Job	Truss	Truss Type	Qty	Ply	LOT 91 PROVIDENCE CREEK | 59 DAVINHALL DRIVE FUQUAY-VARINA, NC
24-0290-R01	V04	Valley	1	1	Job Reference (optional) **# 44170**

Run: 8.430 s Feb 12 2021 Print: 8.430 s Feb 12 2021 MiTek Industries, Inc. Tue Jan 16 14:50:51 2024 Page 1
ID:1EhuSslMpTbkFHTWLa5hq6ypz0?-vWvXFH1hwO575JqdahZJK7UruVjkQHsRaz31qPzum7Y

11-10-13 / 11-10-13 | 23-1-5 / 11-2-7

Scale = 1:43.6

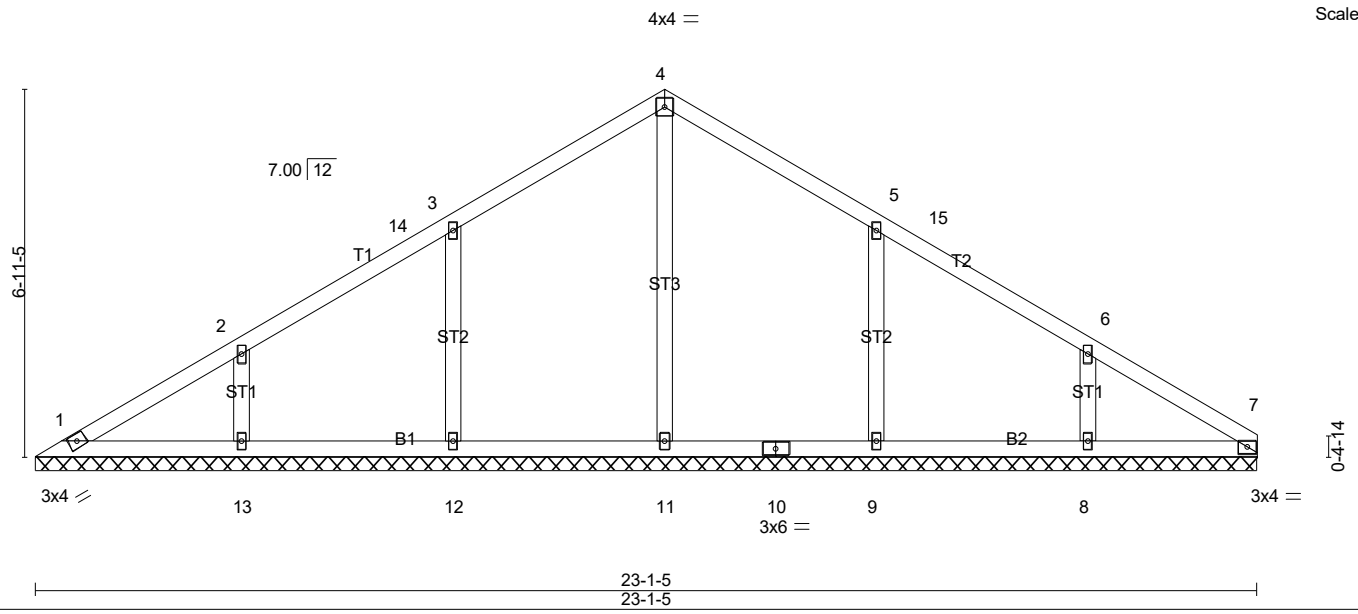

LOADING (psf)		SPACING-	2-0-0	CSI.		DEFL.	in	(loc)	l/defl	L/d	PLATES	GRIP
TCLL (roof)	20.0	Plate Grip DOL	1.15	TC	0.28	Vert(LL)	n/a	-	n/a	999	MT20	244/190
Snow (Pf)	20.0	Lumber DOL	1.15	BC	0.43	Vert(CT)	n/a	-	n/a	999		
TCDL	10.0	Rep Stress Incr	YES	WB	0.17	Horz(CT)	0.00	7	n/a	n/a		
BCLL	0.0 *	Code IRC2021/TPI2014		Matrix-S							Weight: 100 lb	FT = 20%
BCDL	10.0											

LUMBER-
TOP CHORD 2x4 SP No.2
BOT CHORD 2x4 SP No.3
OTHERS 2x4 SP No.3

BRACING-
TOP CHORD Structural wood sheathing directly applied or 6-0-0 oc purlins.
BOT CHORD Rigid ceiling directly applied or 10-0-0 oc bracing.

MiTek recommends that Stabilizers and required cross bracing be installed during truss erection, in accordance with Stabilizer Installation guide.

REACTIONS. All bearings 23-1-5.
(lb) - Max Horz 1=129(LC 11)
Max Uplift All uplift 100 lb or less at joint(s) 1, 12, 13, 9, 8
Max Grav All reactions 250 lb or less at joint(s) 1, 7 except 11=458(LC 23), 12=466(LC 5), 13=324(LC 1), 9=468(LC 6), 8=316(LC 1)

FORCES. (lb) - Max. Comp./Max. Ten. - All forces 250 (lb) or less except when shown.
WEBS 3-12=-372/134, 5-9=-373/134

NOTES- (10-13)
1) Unbalanced roof live loads have been considered for this design.
2) Wind: ASCE 7-16; Vult=120mph (3-second gust) Vasd=95mph; TCDL=5.0psf; BCDL=5.0psf; h=23ft; Cat. II; Exp B; Enclosed; MWFRS (envelope) gable end zone and C-C Exterior(2E) 0-6-8 to 5-4-1, Interior(1) 5-4-1 to 7-1-4, Exterior(2R) 7-1-4 to 16-8-7, Interior(1) 16-8-7 to 18-3-11, Exterior(2E) 18-3-11 to 23-1-5 zone; cantilever left and right exposed ; end vertical left and right exposed;C-C for members and forces & MWFRS for reactions shown; Lumber DOL=1.60 plate grip DOL=1.60
3) TCLL: ASCE 7-16; Pr=20.0 psf (roof LL: Lum DOL=1.15 Plate DOL=1.15); Pf=20.0 psf (Lum DOL=1.15 Plate DOL=1.15); Is=1.0; Rough Cat B; Partially Exp.; Ce=1.0; Cs=1.00; Ct=1.10
4) Unbalanced snow loads have been considered for this design.
5) All plates are 2x4 MT20 unless otherwise indicated.
6) Gable requires continuous bottom chord bearing.
7) This truss has been designed for a 10.0 psf bottom chord live load nonconcurrent with any other live loads.
8) * This truss has been designed for a live load of 30.0psf on the bottom chord in all areas where a rectangle 3-6-0 tall by 1-0-0 wide will fit between the bottom chord and any other members, with BCDL = 10.0psf.
9) Provide mechanical connection (by others) of truss to bearing plate capable of withstanding 100 lb uplift at joint(s) 1, 12, 13, 9, 8.
10) Graphical bracing representation does not depict the size, type or the orientation of the brace on the member. Symbol only indicates that the member must be braced.
11) Bearing symbols are only graphical representations of a possible bearing condition. Bearing symbols are not considered in the structural design of the truss to support the loads indicated.
12) Web bracing shown is for lateral support of individual web members only. Refer to BCSI - Guide to Good Practice for Handling, Installing, Restraining & Bracing of Metal Plate Connected Wood Trusses for additional bracing guidelines, including diagonal bracing.
13) SEE BCSI-B3 SUMMARY SHEET- PERMANENT RESTRAING/BRACING OF CHORDS & WEB MEMBERS FOR RECOMMENDED MINIMUM BRACING REQUIREMENTS OF TOP CHORD, BOTTOM CHORD, AND WEB PLANES. IN ADDITION TO THESE MINIMUM GUIDELINES, ALWAYS CONSULT THE PROJECT ARCHITECT OR ENGINEER FOR ADDITIONAL BRACING CONSIDERATIONS.

NORTH CAROLINA PROFESSIONAL SEAL 28147 ENGINEER MARK K. MORRIS

LOAD CASE(S) Standard

1/15/2024

Job	Truss	Truss Type	Qty	Ply	LOT 91 PROVIDENCE CREEK | 59 DAVINHALL DRIVE FUQUAY-VARINA, NC
24-0290-R01	V05	GABLE	1	1	Job Reference (optional) **# 44170**

Run: 8.430 s Feb 12 2021 Print: 8.430 s Feb 12 2021 MiTek Industries, Inc. Tue Jan 16 14:50:52 2024 Page 1
ID:1EhuSslMpTbkFHTWLa5hq6ypz0?-NjTvSd1JhhD_jTPp8P4YsL10Uv3A9jlapdpbMrzum7X

10-5-11 | 20-11-6
10-5-11 | 10-5-11

Scale = 1:38.7

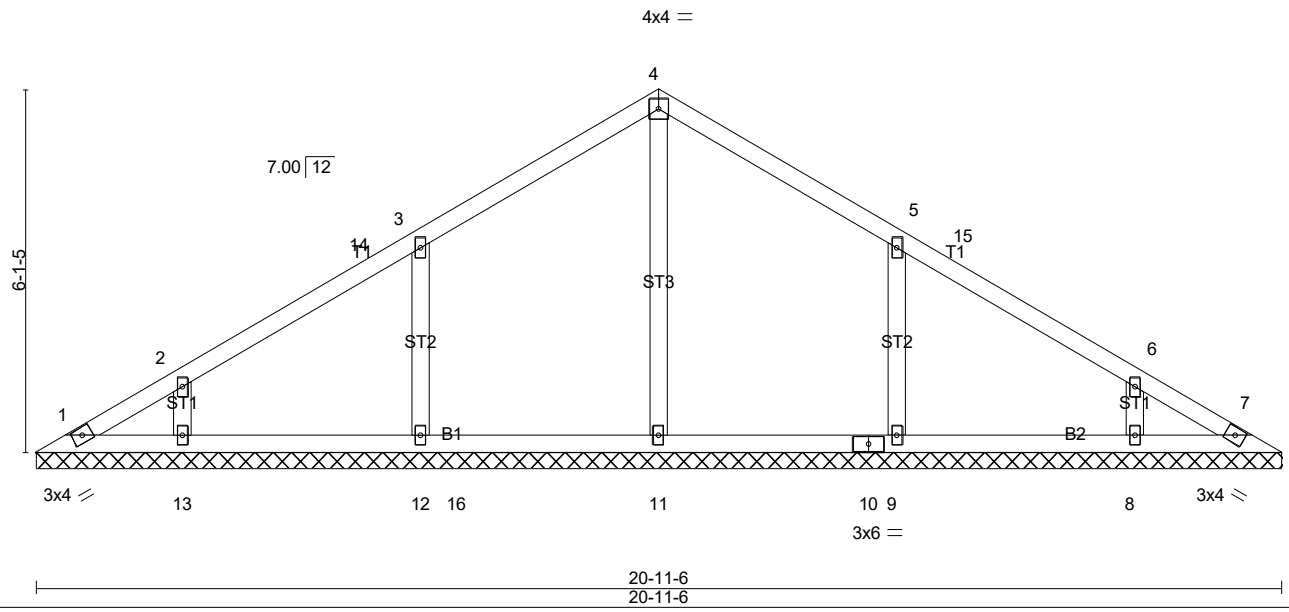

LOADING (psf)		SPACING-	2-0-0	CSI.		DEFL.	in	(loc)	l/defl	L/d	PLATES	GRIP
TCLL (roof)	20.0	Plate Grip DOL	1.15	TC	0.29	Vert(LL)	n/a	-	n/a	999	MT20	244/190
Snow (Pf)	20.0	Lumber DOL	1.15	BC	0.42	Vert(CT)	n/a	-	n/a	999		
TCDL	10.0	Rep Stress Incr	YES	WB	0.13	Horz(CT)	0.00	7	n/a	n/a		
BCLL	0.0 *	Code IRC2021/TPI2014		Matrix-S							Weight: 86 lb	FT = 20%
BCDL	10.0											

LUMBER-
TOP CHORD 2x4 SP No.2
BOT CHORD 2x4 SP No.3
OTHERS 2x4 SP No.3

BRACING-
TOP CHORD Structural wood sheathing directly applied or 6-0-0 oc purlins.
BOT CHORD Rigid ceiling directly applied or 10-0-0 oc bracing.

MiTek recommends that Stabilizers and required cross bracing be installed during truss erection, in accordance with Stabilizer Installation guide.

REACTIONS. All bearings 20-11-6.
(lb) - Max Horz 1=113(LC 11)
Max Uplift All uplift 100 lb or less at joint(s) 1, 7, 12, 13, 9, 8
Max Grav All reactions 250 lb or less at joint(s) 1, 7 except 11=449(LC 23), 12=463(LC 20), 13=267(LC 1), 9=463(LC 21), 8=267(LC 1)

FORCES. (lb) - Max. Comp./Max. Ten. - All forces 250 (lb) or less except when shown.
WEBS 3-12=-380/137, 5-9=-380/137

NOTES- (10-13)
1) Unbalanced roof live loads have been considered for this design.
2) Wind: ASCE 7-16; Vult=120mph (3-second gust) Vasd=95mph; TCDL=5.0psf; BCDL=5.0psf; h=23ft; Cat. II; Exp B; Enclosed; MWFRS (envelope) gable end zone and C-C Exterior(2E) 0-6-8 to 5-4-1, Interior(1) 5-4-1 to 5-8-1, Exterior(2R) 5-8-1 to 15-3-4, Interior(1) 15-3-4 to 15-7-5, Exterior(2E) 15-7-5 to 20-4-14 zone; cantilever left and right exposed ; end vertical left and right exposed;C-C for members and forces & MWFRS for reactions shown; Lumber DOL=1.60 plate grip DOL=1.60
3) TCLL: ASCE 7-16; Pr=20.0 psf (roof LL: Lum DOL=1.15 Plate DOL=1.15); Pf=20.0 psf (Lum DOL=1.15 Plate DOL=1.15); Is=1.0; Rough Cat B; Partially Exp.; Ce=1.0; Cs=1.00; Ct=1.10
4) Unbalanced snow loads have been considered for this design.
5) All plates are 2x4 MT20 unless otherwise indicated.
6) Gable requires continuous bottom chord bearing.
7) This truss has been designed for a 10.0 psf bottom chord live load nonconcurrent with any other live loads.
8) * This truss has been designed for a live load of 30.0psf on the bottom chord in all areas where a rectangle 3-6-0 tall by 1-0-0 wide will fit between the bottom chord and any other members, with BCDL = 10.0psf.
9) Provide mechanical connection (by others) of truss to bearing plate capable of withstanding 100 lb uplift at joint(s) 1, 7, 12, 13, 9, 8.
10) Graphical bracing representation does not depict the size, type or the orientation of the brace on the member. Symbol only indicates that the member must be braced.
11) Bearing symbols are only graphical representations of a possible bearing condition. Bearing symbols are not considered in the structural design of the truss to support the loads indicated.
12) Web bracing shown is for lateral support of individual web members only. Refer to BCSI - Guide to Good Practice for Handling, Installing, Restraining & Bracing of Metal Plate Connected Wood Trusses for additional bracing guidelines, including diagonal bracing.
13) SEE BCSI-B3 SUMMARY SHEET- PERMANENT RESTRAING/BRACING OF CHORDS & WEB MEMBERS FOR RECOMMENDED MINIMUM BRACING REQUIREMENTS OF TOP CHORD, BOTTOM CHORD, AND WEB PLANES. IN ADDITION TO THESE MINIMUM GUIDELINES, ALWAYS CONSULT THE PROJECT ARCHITECT OR ENGINEER FOR ADDITIONAL BRACING CONSIDERATIONS.

NORTH CAROLINA PROFESSIONAL SEAL 28147 ENGINEER MARK K. MORRIS

LOAD CASE(S) Standard

1/15/2024

Job	Truss	Truss Type	Qty	Ply	LOT 91 PROVIDENCE CREEK | 59 DAVINHALL DRIVE FUQUAY-VARINA, NC
24-0290-R01	V06	Valley	1	1	Job Reference (optional) **# 44170**

Run: 8.430 s Feb 12 2021 Print: 8.430 s Feb 12 2021 MiTek Industries, Inc. Tue Jan 16 14:50:52 2024 Page 1
ID:1EhuSslMpTbkFHTWLa5hq6ypz0?-NjTvSd1JhhD_jTPp8P4YsL1?bv5U9kKapdpbMrzum7X

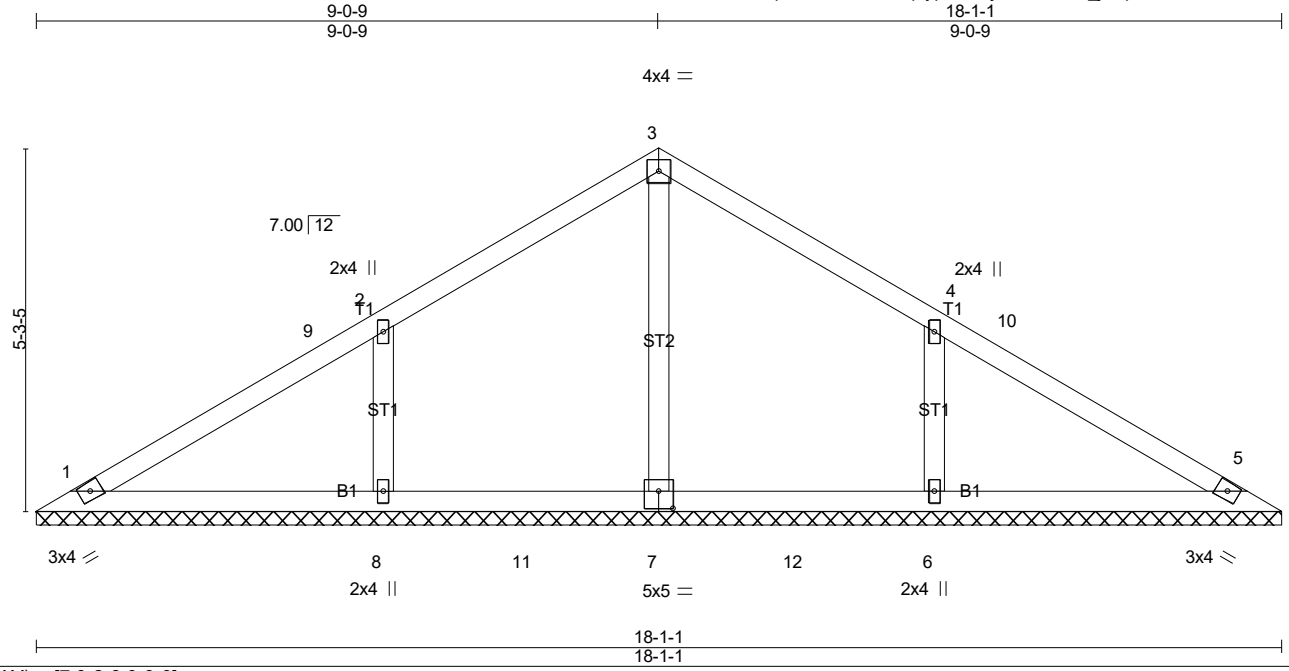

Plate Offsets (X,Y)-- [7:0-2-8,0-3-0]

LOADING (psf)		**SPACING-** 2-0-0	**CSI.**	**DEFL.** in (loc) l/defl L/d	**PLATES**	**GRIP**
TCLL (roof)	20.0	Plate Grip DOL 1.15	TC 0.35	Vert(LL) n/a - n/a 999	MT20	244/190
Snow (Pf)	20.0	Lumber DOL 1.15	BC 0.27	Vert(CT) n/a - n/a 999		
TCDL	10.0	Rep Stress Incr YES	WB 0.10	Horz(CT) 0.00 5 n/a n/a		
BCLL	0.0 *	Code IRC2021/TPI2014	Matrix-S		Weight: 70 lb	FT = 20%
BCDL	10.0					

LUMBER-
TOP CHORD 2x4 SP No.2
BOT CHORD 2x4 SP No.3
OTHERS 2x4 SP No.3

BRACING-
TOP CHORD Structural wood sheathing directly applied or 6-0-0 oc purlins.
BOT CHORD Rigid ceiling directly applied or 10-0-0 oc bracing.

MiTek recommends that Stabilizers and required cross bracing be installed during truss erection, in accordance with Stabilizer Installation guide.

REACTIONS. All bearings 18-1-1.
(lb) - Max Horz 1=97(LC 13)
Max Uplift All uplift 100 lb or less at joint(s) 1, 5 except 8=-111(LC 14), 6=-111(LC 15)
Max Grav All reactions 250 lb or less at joint(s) 1, 5 except 7=376(LC 6), 8=520(LC 20), 6=520(LC 21)

FORCES. (lb) - Max. Comp./Max. Ten. - All forces 250 (lb) or less except when shown.
WEBS 2-8=-414/153, 4-6=-414/153

NOTES- (9-12)
1) Unbalanced roof live loads have been considered for this design.
2) Wind: ASCE 7-16; Vult=120mph (3-second gust) Vasd=95mph; TCDL=5.0psf; BCDL=5.0psf; h=23ft; Cat. II; Exp B; Enclosed; MWFRS (envelope) gable end zone and C-C Exterior(2E) 0-6-8 to 5-0-9, Exterior(2R) 5-0-9 to 13-0-9, Exterior(2E) 13-0-9 to 17-6-10 zone; cantilever left and right exposed ; end vertical left and right exposed;C-C for members and forces & MWFRS for reactions shown; Lumber DOL=1.60 plate grip DOL=1.60
3) TCLL: ASCE 7-16; Pr=20.0 psf (roof LL: Lum DOL=1.15 Plate DOL=1.15); Pf=20.0 psf (Lum DOL=1.15 Plate DOL=1.15); Is=1.0; Rough Cat B; Partially Exp.; Ce=1.0; Cs=1.00; Ct=1.10
4) Unbalanced snow loads have been considered for this design.
5) Gable requires continuous bottom chord bearing.
6) This truss has been designed for a 10.0 psf bottom chord live load nonconcurrent with any other live loads.
7) * This truss has been designed for a live load of 30.0psf on the bottom chord in all areas where a rectangle 3-6-0 tall by 1-0-0 wide will fit between the bottom chord and any other members, with BCDL = 10.0psf.
8) Provide mechanical connection (by others) of truss to bearing plate capable of withstanding 100 lb uplift at joint(s) 1, 5 except (jt=lb) 8=111, 6=111.
9) Graphical bracing representation does not depict the size, type or the orientation of the brace on the member. Symbol only indicates that the member must be braced.
10) Bearing symbols are only graphical representations of a possible bearing condition. Bearing symbols are not considered in the structural design of the truss to support the loads indicated.
11) Web bracing shown is for lateral support of individual web members only. Refer to BCSI - Guide to Good Practice for Handling, Installing, Restraining & Bracing of Metal Plate Connected Wood Trusses for additional bracing guidelines, including diagonal bracing.
12) SEE BCSI-B3 SUMMARY SHEET- PERMANENT RESTRAING/BRACING OF CHORDS & WEB MEMBERS FOR RECOMMENDED MINIMUM BRACING REQUIREMENTS OF TOP CHORD, BOTTOM CHORD, AND WEB PLANES. IN ADDITION TO THESE MINIMUM GUIDELINES, ALWAYS CONSULT THE PROJECT ARCHITECT OR ENGINEER FOR ADDITIONAL BRACING CONSIDERATIONS.

NORTH CAROLINA PROFESSIONAL SEAL 28147 ENGINEER MARK K. MORRIS

LOAD CASE(S) Standard

1/15/2024

Job	Truss	Truss Type	Qty	Ply	LOT 91 PROVIDENCE CREEK | 59 DAVINHALL DRIVE FUQUAY-VARINA, NC
24-0290-R01	V07	Valley	1	1	Job Reference (optional) **# 44170**

Run: 8.430 s Feb 12 2021 Print: 8.430 s Feb 12 2021 MiTek Industries, Inc. Tue Jan 16 14:50:53 2024 Page 1
ID:1EhuSslMpTbkFHTWLa5hq6ypz0?-rv0Hgz2xS?LrKdz0i6bnPYaBSJT1uBuj1HY8vIzum7W

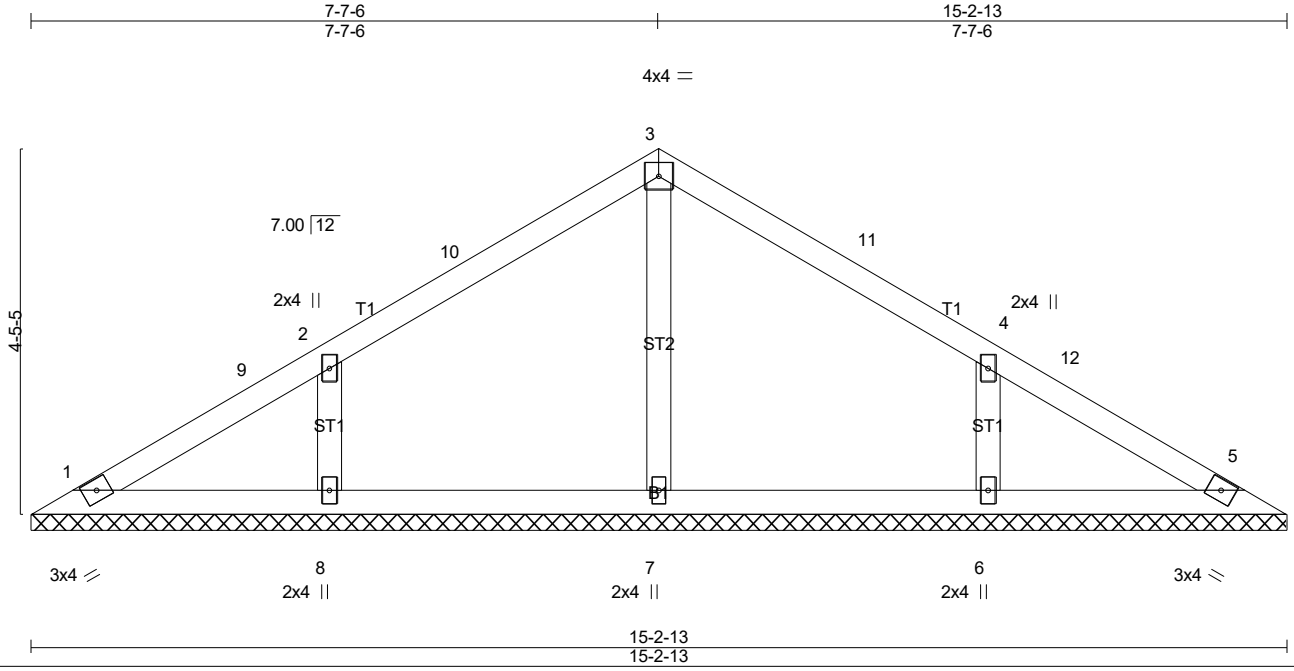

LOADING (psf)		SPACING-	2-0-0	CSI.		DEFL.	in	(loc)	l/defl	L/d	PLATES	GRIP
TCLL (roof)	20.0	Plate Grip DOL	1.15	TC	0.28	Vert(LL)	n/a	-	n/a	999	MT20	244/190
Snow (Pf)	20.0	Lumber DOL	1.15	BC	0.19	Vert(CT)	n/a	-	n/a	999		
TCDL	10.0	Rep Stress Incr	YES	WB	0.08	Horz(CT)	0.00	5	n/a	n/a		
BCLL	0.0 *	Code IRC2021/TPI2014		Matrix-S							Weight: 57 lb	FT = 20%
BCDL	10.0											

LUMBER-
TOP CHORD 2x4 SP No.2
BOT CHORD 2x4 SP No.3
OTHERS 2x4 SP No.3

BRACING-
TOP CHORD Structural wood sheathing directly applied or 6-0-0 oc purlins.
BOT CHORD Rigid ceiling directly applied or 10-0-0 oc bracing.

MiTek recommends that Stabilizers and required cross bracing be installed during truss erection, in accordance with Stabilizer Installation guide.

REACTIONS. All bearings 15-2-13.
(lb) - Max Horz 1=-81(LC 10)
Max Uplift All uplift 100 lb or less at joint(s) 1, 8, 6
Max Grav All reactions 250 lb or less at joint(s) 1, 5 except 7=285(LC 21), 8=448(LC 20), 6=448(LC 21)

FORCES. (lb) - Max. Comp./Max. Ten. - All forces 250 (lb) or less except when shown.
WEBS 2-8=-369/129, 4-6=-369/129

NOTES- (9-12)
1) Unbalanced roof live loads have been considered for this design.
2) Wind: ASCE 7-16; Vult=120mph (3-second gust) Vasd=95mph; TCDL=5.0psf; BCDL=5.0psf; h=23ft; Cat. II; Exp B; Enclosed; MWFRS (envelope) gable end zone and C-C Exterior(2E) 0-6-8 to 5-4-1, Exterior(2R) 5-4-1 to 9-10-11, Exterior(2E) 9-10-11 to 14-8-5 zone; cantilever left and right exposed ; end vertical left and right exposed;C-C for members and forces & MWFRS for reactions shown; Lumber DOL=1.60 plate grip DOL=1.60
3) TCLL: ASCE 7-16; Pr=20.0 psf (roof LL: Lum DOL=1.15 Plate DOL=1.15); Pf=20.0 psf (Lum DOL=1.15 Plate DOL=1.15); Is=1.0; Rough Cat B; Partially Exp.; Ce=1.0; Cs=1.00; Ct=1.10
4) Unbalanced snow loads have been considered for this design.
5) Gable requires continuous bottom chord bearing.
6) This truss has been designed for a 10.0 psf bottom chord live load nonconcurrent with any other live loads.
7) * This truss has been designed for a live load of 30.0psf on the bottom chord in all areas where a rectangle 3-6-0 tall by 1-0-0 wide will fit between the bottom chord and any other members.
8) Provide mechanical connection (by others) of truss to bearing plate capable of withstanding 100 lb uplift at joint(s) 1, 8, 6.
9) Graphical bracing representation does not depict the size, type or the orientation of the brace on the member. Symbol only indicates that the member must be braced.
10) Bearing symbols are only graphical representations of a possible bearing condition. Bearing symbols are not considered in the structural design of the truss to support the loads indicated.
11) Web bracing shown is for lateral support of individual web members only. Refer to BCSI - Guide to Good Practice for Handling, Installing, Restraining & Bracing of Metal Plate Connected Wood Trusses for additional bracing guidelines, including diagonal bracing.
12) SEE BCSI-B3 SUMMARY SHEET- PERMANENT RESTRAINING/BRACING OF CHORDS & WEB MEMBERS FOR RECOMMENDED MINIMUM BRACING REQUIREMENTS OF TOP CHORD, BOTTOM CHORD, AND WEB PLANES. IN ADDITION TO THESE MINIMUM GUIDELINES, ALWAYS CONSULT THE PROJECT ARCHITECT OR ENGINEER FOR ADDITIONAL BRACING CONSIDERATIONS.

LOAD CASE(S) Standard

NORTH CAROLINA PROFESSIONAL SEAL 28147 ENGINEER MARK K. MORRIS

1/15/2024

Job	Truss	Truss Type	Qty	Ply	LOT 91 PROVIDENCE CREEK | 59 DAVINHALL DRIVE FUQUAY-VARINA, NC
24-0290-R01	V08	GABLE	1	1	Job Reference (optional) **# 44170**

Run: 8.430 s Feb 12 2021 Print: 8.430 s Feb 12 2021 MiTek Industries, Inc. Tue Jan 16 14:50:53 2024 Page 1
ID:1EhuSslMpTbkFHTWLa5hq6ypz0?-rv0Hgz2xS?LrKdz0i6bnPYaBTJSmuByj1HY8vIzum7W

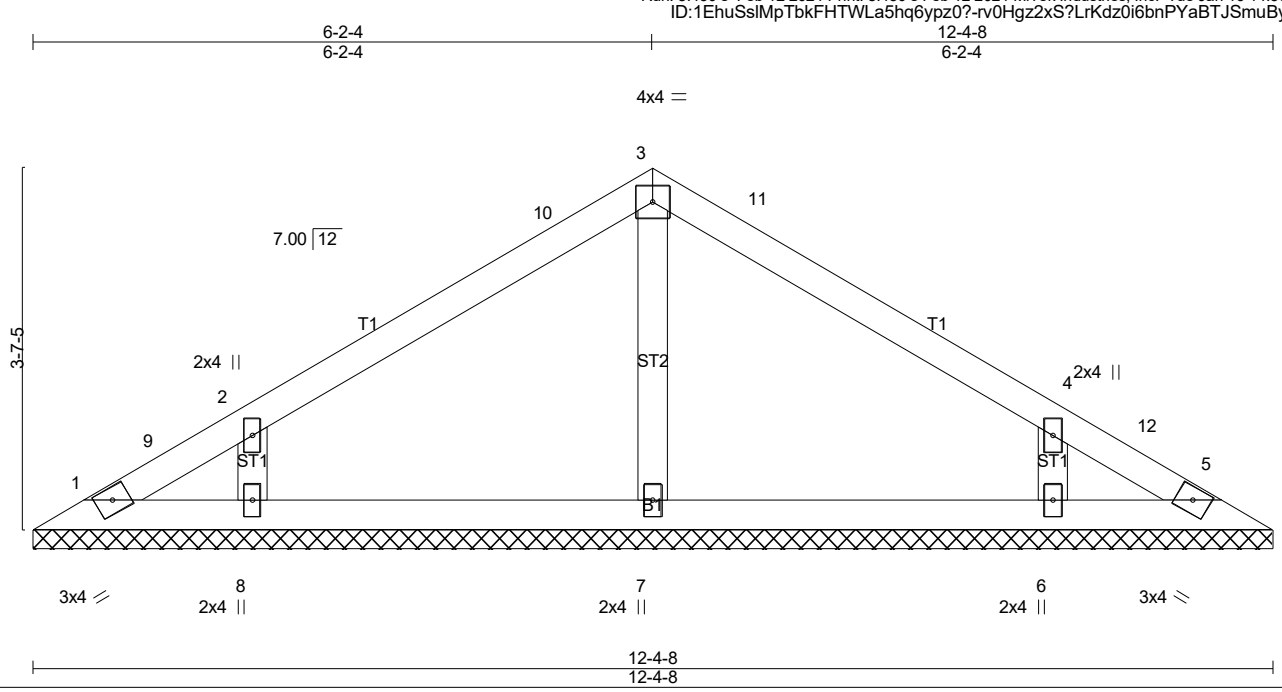

LOADING (psf)		SPACING-	2-0-0	CSI.		DEFL.	in	(loc)	l/defl	L/d	PLATES	GRIP
TCLL (roof)	20.0	Plate Grip DOL	1.15	TC	0.28	Vert(LL)	n/a	-	n/a	999	MT20	244/190
Snow (Pf)	20.0	Lumber DOL	1.15	BC	0.21	Vert(CT)	n/a	-	n/a	999		
TCDL	10.0	Rep Stress Incr	YES	WB	0.07	Horz(CT)	0.00	5	n/a	n/a		
BCLL	0.0 *	Code IRC2021/TPI2014		Matrix-S							Weight: 45 lb	FT = 20%
BCDL	10.0											

LUMBER-
TOP CHORD 2x4 SP No.2
BOT CHORD 2x4 SP No.3
OTHERS 2x4 SP No.3

BRACING-
TOP CHORD Structural wood sheathing directly applied or 6-0-0 oc purlins.
BOT CHORD Rigid ceiling directly applied or 10-0-0 oc bracing.

MiTek recommends that Stabilizers and required cross bracing be installed during truss erection, in accordance with Stabilizer Installation guide.

REACTIONS. All bearings 12-4-8.
(lb) - Max Horz 1=-64(LC 10)
Max Uplift All uplift 100 lb or less at joint(s) 1, 5, 8, 6
Max Grav All reactions 250 lb or less at joint(s) 1, 5 except 7=291(LC 21), 8=423(LC 20), 6=423(LC 21)

FORCES. (lb) - Max. Comp./Max. Ten. - All forces 250 (lb) or less except when shown.
WEBS 2-8=-364/120, 4-6=-364/120

NOTES- (9-12)
1) Unbalanced roof live loads have been considered for this design.
2) Wind: ASCE 7-16; Vult=120mph (3-second gust) Vasd=95mph; TCDL=5.0psf; BCDL=5.0psf; h=23ft; Cat. II; Exp B; Enclosed; MWFRS (envelope) gable end zone and C-C Exterior(2E) 0-6-8 to 5-4-1, Exterior(2R) 5-4-1 to 7-0-7, Exterior(2E) 7-0-7 to 11-10-0 zone; cantilever left and right exposed ; end vertical left and right exposed;C-C for members and forces & MWFRS for reactions shown; Lumber DOL=1.60 plate grip DOL=1.60
3) TCLL: ASCE 7-16; Pr=20.0 psf (roof LL: Lum DOL=1.15 Plate DOL=1.15); Pf=20.0 psf (Lum DOL=1.15 Plate DOL=1.15); Is=1.0; Rough Cat B; Partially Exp.; Ce=1.0; Cs=1.00; Ct=1.10
4) Unbalanced snow loads have been considered for this design.
5) Gable requires continuous bottom chord bearing.
6) This truss has been designed for a 10.0 psf bottom chord live load nonconcurrent with any other live loads.
7) * This truss has been designed for a live load of 30.0psf on the bottom chord in all areas where a rectangle 3-6-0 tall by 1-0-0 wide will fit between the bottom chord and any other members.
8) Provide mechanical connection (by others) of truss to bearing plate capable of withstanding 100 lb uplift at joint(s) 1, 5, 8, 6.
9) Graphical bracing representation does not depict the size, type or the orientation of the brace on the member. Symbol only indicates that the member must be braced.
10) Bearing symbols are only graphical representations of a possible bearing condition. Bearing symbols are not considered in the structural design of the truss to support the loads indicated.
11) Web bracing shown is for lateral support of individual web members only. Refer to BCSI - Guide to Good Practice for Handling, Installing, Restraining & Bracing of Metal Plate Connected Wood Trusses for additional bracing guidelines, including diagonal bracing.
12) SEE BCSI-B3 SUMMARY SHEET- PERMANENT RESTRAING/BRACING OF CHORDS & WEB MEMBERS FOR RECOMMENDED MINIMUM BRACING REQUIREMENTS OF TOP CHORD, BOTTOM CHORD, AND WEB PLANES. IN ADDITION TO THESE MINIMUM GUIDELINES, ALWAYS CONSULT THE PROJECT ARCHITECT OR ENGINEER FOR ADDITIONAL BRACING CONSIDERATIONS.

LOAD CASE(S) Standard

NORTH CAROLINA PROFESSIONAL SEAL 28147 ENGINEER MARK K. MORRIS

1/15/2024

Job	Truss	Truss Type	Qty	Ply	LOT 91 PROVIDENCE CREEK | 59 DAVINHALL DRIVE FUQUAY-VARINA, NC
24-0290-R01	V09	Valley	1	1	Job Reference (optional) **# 44170**

Run: 8.430 s Feb 12 2021 Print: 8.430 s Feb 12 2021 MiTek Industries, Inc. Tue Jan 16 14:50:53 2024 Page 1
ID:1EhuSslMpTbkFHTWLa5hq6ypz0?-rv0Hgz2xS?LrKdz0i6bnPYaAoJRJuCDj1HY8vIzum7W

Scale = 1:18.7

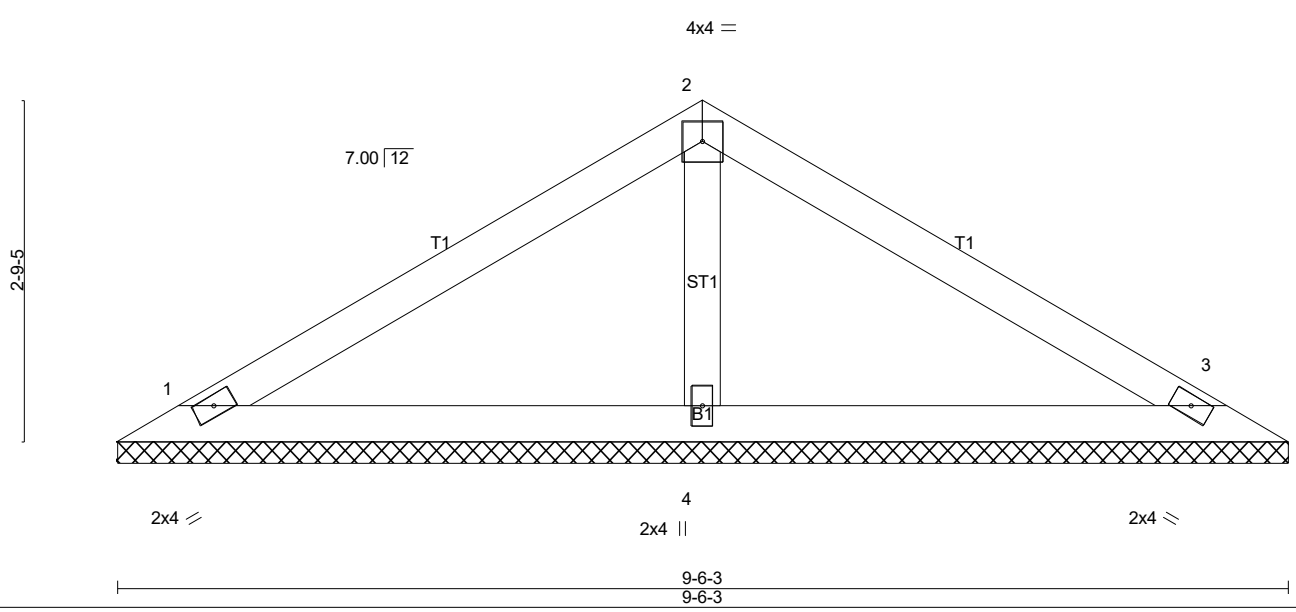

LOADING (psf)		SPACING-	2-0-0	CSI.		DEFL.	in	(loc)	l/defl	L/d	PLATES	GRIP
TCLL (roof)	20.0	Plate Grip DOL	1.15	TC	0.38	Vert(LL)	n/a	-	n/a	999	MT20	244/190
Snow (Pf)	20.0	Lumber DOL	1.15	BC	0.30	Vert(CT)	n/a	-	n/a	999		
TCDL	10.0	Rep Stress Incr	YES	WB	0.05	Horz(CT)	0.00	3	n/a	n/a		
BCLL	0.0 *	Code IRC2021/TPI2014		Matrix-S							Weight: 32 lb	FT = 20%
BCDL	10.0											

LUMBER-
TOP CHORD 2x4 SP No.2
BOT CHORD 2x4 SP No.3
OTHERS 2x4 SP No.3

BRACING-
TOP CHORD Structural wood sheathing directly applied or 6-0-0 oc purlins.
BOT CHORD Rigid ceiling directly applied or 10-0-0 oc bracing.

MiTek recommends that Stabilizers and required cross bracing be installed during truss erection, in accordance with Stabilizer Installation guide.

REACTIONS. (lb/size) 1=159/9-6-3 (min. 0-1-8), 3=159/9-6-3 (min. 0-1-8), 4=356/9-6-3 (min. 0-1-8)
Max Horz 1=48(LC 11)
Max Uplift1=-23(LC 14), 3=-29(LC 15), 4=-6(LC 14)
Max Grav 1=230(LC 20), 3=230(LC 21), 4=367(LC 20)

FORCES. (lb) - Max. Comp./Max. Ten. - All forces 250 (lb) or less except when shown.

NOTES- (9-12)
1) Unbalanced roof live loads have been considered for this design.
2) Wind: ASCE 7-16; Vult=120mph (3-second gust) Vasd=95mph; TCDL=5.0psf; BCDL=5.0psf; h=23ft; Cat. II; Exp B; Enclosed; MWFRS (envelope) gable end zone and C-C Exterior(2E) zone; cantilever left and right exposed ; end vertical left and right exposed;C-C for members and forces & MWFRS for reactions shown; Lumber DOL=1.60 plate grip DOL=1.60
3) TCLL: ASCE 7-16; Pr=20.0 psf (roof LL: Lum DOL=1.15 Plate DOL=1.15); Pf=20.0 psf (Lum DOL=1.15 Plate DOL=1.15); Is=1.0; Rough Cat B; Partially Exp.; Ce=1.0; Cs=1.00; Ct=1.10
4) Unbalanced snow loads have been considered for this design.
5) Gable requires continuous bottom chord bearing.
6) This truss has been designed for a 10.0 psf bottom chord live load nonconcurrent with any other live loads.
7) * This truss has been designed for a live load of 30.0psf on the bottom chord in all areas where a rectangle 3-6-0 tall by 1-0-0 wide will fit between the bottom chord and any other members.
8) Provide mechanical connection (by others) of truss to bearing plate capable of withstanding 100 lb uplift at joint(s) 1, 3, 4.
9) Graphical bracing representation does not depict the size, type or the orientation of the brace on the member. Symbol only indicates that the member must be braced.
10) Bearing symbols are only graphical representations of a possible bearing condition. Bearing symbols are not considered in the structural design of the truss to support the loads indicated.
11) Web bracing shown is for lateral support of individual web members only. Refer to BCSI - Guide to Good Practice for Handling, Installing, Restraining & Bracing of Metal Plate Connected Wood Trusses for additional bracing guidelines, including diagonal bracing.
12) SEE BCSI-B3 SUMMARY SHEET- PERMANENT RESTRAING/BRACING OF CHORDS & WEB MEMBERS FOR RECOMMENDED MINIMUM BRACING REQUIREMENTS OF TOP CHORD, BOTTOM CHORD, AND WEB PLANES. IN ADDITION TO THESE MINIMUM GUIDELINES, ALWAYS CONSULT THE PROJECT ARCHITECT OR ENGINEER FOR ADDITIONAL BRACING CONSIDERATIONS.

LOAD CASE(S) Standard

NORTH CAROLINA PROFESSIONAL SEAL 28147 ENGINEER MARK K. MORRIS

1/15/2024

Job	Truss	Truss Type	Qty	Ply	LOT 91 PROVIDENCE CREEK | 59 DAVINHALL DRIVE FUQUAY-VARINA, NC
24-0290-R01	V10	Valley	1	1	Job Reference (optional) **# 44170**

Run: 8.430 s Feb 12 2021 Print: 8.430 s Feb 12 2021 MiTek Industries, Inc. Tue Jan 16 14:50:54 2024 Page 1
ID:1EhuSslMpTbkFHTWLa5hq6ypz0?-J5aftJ3ZDJTiynYCFq70ym6NLjp8dfstGxliRkzum7V

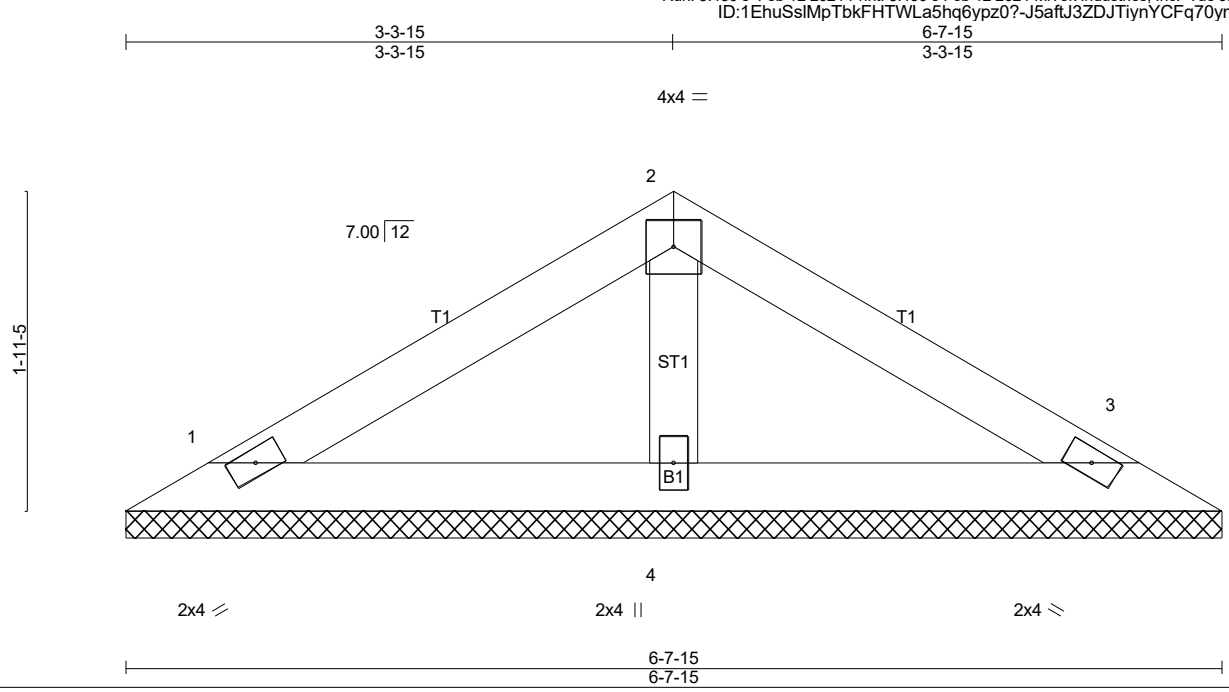

LOADING (psf)		SPACING-	2-0-0	CSI.		DEFL.	in	(loc)	l/defl	L/d	PLATES	GRIP
TCLL (roof)	20.0	Plate Grip DOL	1.15	TC	0.20	Vert(LL)	n/a	-	n/a	999	MT20	244/190
Snow (Pf)	20.0	Lumber DOL	1.15	BC	0.13	Vert(CT)	n/a	-	n/a	999		
TCDL	10.0	Rep Stress Incr	YES	WB	0.03	Horz(CT)	0.00	3	n/a	n/a		
BCLL	0.0 *	Code IRC2021/TPI2014		Matrix-P							Weight: 22 lb	FT = 20%
BCDL	10.0											

LUMBER-
TOP CHORD 2x4 SP No.2
BOT CHORD 2x4 SP No.3
OTHERS 2x4 SP No.3

BRACING-
TOP CHORD Structural wood sheathing directly applied or 6-0-0 oc purlins.
BOT CHORD Rigid ceiling directly applied or 10-0-0 oc bracing.

MiTek recommends that Stabilizers and required cross bracing be installed during truss erection, in accordance with Stabilizer Installation guide.

REACTIONS. (lb/size) 1=116/6-7-15 (min. 0-1-8), 3=116/6-7-15 (min. 0-1-8), 4=214/6-7-15 (min. 0-1-8)
Max Horz 1=-32(LC 10)
Max Uplift1=-20(LC 14), 3=-24(LC 15)
Max Grav 1=154(LC 20), 3=154(LC 21), 4=214(LC 1)

FORCES. (lb) - Max. Comp./Max. Ten. - All forces 250 (lb) or less except when shown.

NOTES- (9-12)
1) Unbalanced roof live loads have been considered for this design.
2) Wind: ASCE 7-16; Vult=120mph (3-second gust) Vasd=95mph; TCDL=5.0psf; BCDL=5.0psf; h=23ft; Cat. II; Exp B; Enclosed; MWFRS (envelope) gable end zone and C-C Exterior(2E) zone; cantilever left and right exposed ; end vertical left and right exposed;C-C for members and forces & MWFRS for reactions shown; Lumber DOL=1.60 plate grip DOL=1.60
3) TCLL: ASCE 7-16; Pr=20.0 psf (roof LL: Lum DOL=1.15 Plate DOL=1.15); Pf=20.0 psf (Lum DOL=1.15 Plate DOL=1.15); Is=1.0; Rough Cat B; Partially Exp.; Ce=1.0; Cs=1.00; Ct=1.10
4) Unbalanced snow loads have been considered for this design.
5) Gable requires continuous bottom chord bearing.
6) This truss has been designed for a 10.0 psf bottom chord live load nonconcurrent with any other live loads.
7) * This truss has been designed for a live load of 30.0psf on the bottom chord in all areas where a rectangle 3-6-0 tall by 1-0-0 wide will fit between the bottom chord and any other members.
8) Provide mechanical connection (by others) of truss to bearing plate capable of withstanding 100 lb uplift at joint(s) 1, 3.
9) Graphical bracing representation does not depict the size, type or the orientation of the brace on the member. Symbol only indicates that the member must be braced.
10) Bearing symbols are only graphical representations of a possible bearing condition. Bearing symbols are not considered in the structural design of the truss to support the loads indicated.
11) Web bracing shown is for lateral support of individual web members only. Refer to BCSI - Guide to Good Practice for Handling, Installing, Restraining & Bracing of Metal Plate Connected Wood Trusses for additional bracing guidelines, including diagonal bracing.
12) SEE BCSI-B3 SUMMARY SHEET- PERMANENT RESTRAING/BRACING OF CHORDS & WEB MEMBERS FOR RECOMMENDED MINIMUM BRACING REQUIREMENTS OF TOP CHORD, BOTTOM CHORD, AND WEB PLANES. IN ADDITION TO THESE MINIMUM GUIDELINES, ALWAYS CONSULT THE PROJECT ARCHITECT OR ENGINEER FOR ADDITIONAL BRACING CONSIDERATIONS.

LOAD CASE(S) Standard

NORTH CAROLINA PROFESSIONAL SEAL 28147 ENGINEER MARK K. MORRIS

1/15/2024

Job	Truss	Truss Type	Qty	Ply	LOT 91 PROVIDENCE CREEK | 59 DAVINHALL DRIVE FUQUAY-VARINA, NC
24-0290-R01	V11	Valley	1	1	Job Reference (optional) **# 44170**

Run: 8.430 s Feb 12 2021 Print: 8.430 s Feb 12 2021 MiTek Industries, Inc. Tue Jan 16 14:50:54 2024 Page 1
ID:1EhuSslMpTbkFHTWLa5hq6ypz0?-J5aftJ3ZDJTiynYCFq70ym6QwjpudfJtGxliRkzum7V

Scale = 1:8.1

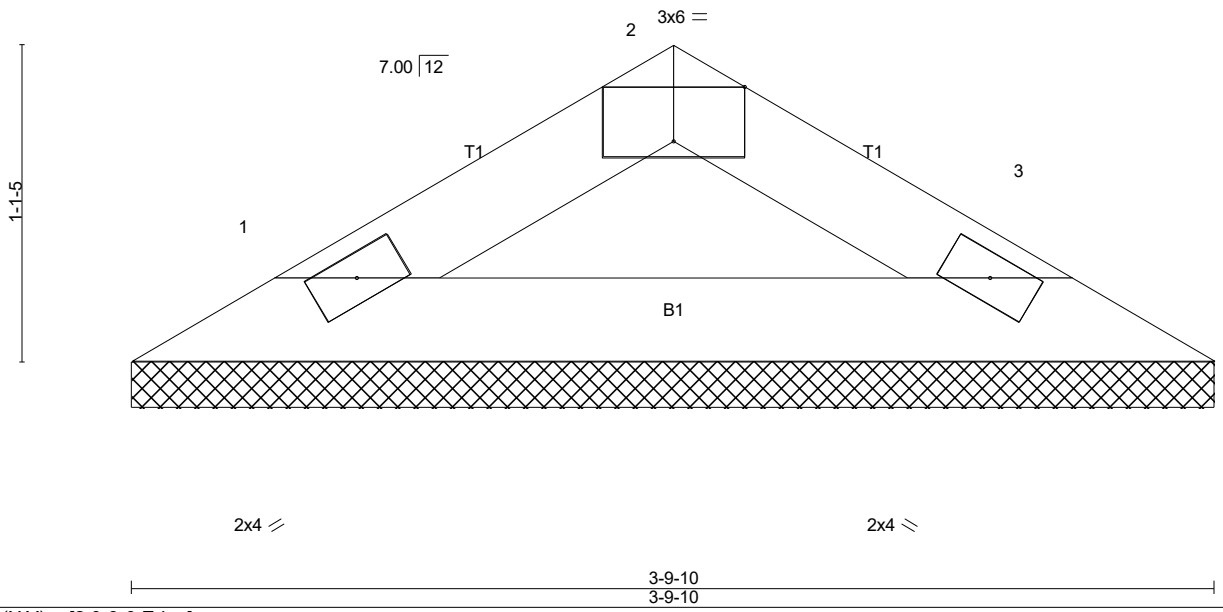

Plate Offsets (X,Y)-- [2:0-3-0,Edge]

LOADING (psf)		**SPACING-** 2-0-0	**CSI.**	**DEFL.** in (loc) l/defl L/d	**PLATES**	**GRIP**
TCLL (roof)	20.0	Plate Grip DOL 1.15	TC 0.04	Vert(LL) n/a - n/a 999	MT20	244/190
Snow (Pf)	20.0	Lumber DOL 1.15	BC 0.15	Vert(CT) n/a - n/a 999		
TCDL	10.0	Rep Stress Incr YES	WB 0.00	Horz(CT) 0.00 3 n/a n/a		
BCLL	0.0 *	Code IRC2021/TPI2014	Matrix-P		Weight: 10 lb	FT = 20%
BCDL	10.0					

LUMBER-
TOP CHORD 2x4 SP No.2
BOT CHORD 2x4 SP No.3

BRACING-
TOP CHORD Structural wood sheathing directly applied or 3-9-10 oc purlins.
BOT CHORD Rigid ceiling directly applied or 10-0-0 oc bracing.

MiTek recommends that Stabilizers and required cross bracing be installed during truss erection, in accordance with Stabilizer Installation guide.

REACTIONS. (lb/size) 1=109/3-9-10 (min. 0-1-8), 3=109/3-9-10 (min. 0-1-8)
Max Horz 1=-16(LC 12)
Max Uplift1=-8(LC 14), 3=-8(LC 15)
Max Grav 1=119(LC 20), 3=119(LC 21)

FORCES. (lb) - Max. Comp./Max. Ten. - All forces 250 (lb) or less except when shown.

NOTES- (9-12)
1) Unbalanced roof live loads have been considered for this design.
2) Wind: ASCE 7-16; Vult=120mph (3-second gust) Vasd=95mph; TCDL=5.0psf; BCDL=5.0psf; h=23ft; Cat. II; Exp B; Enclosed; MWFRS (envelope) gable end zone and C-C Exterior(2E) zone; cantilever left and right exposed ; end vertical left and right exposed;C-C for members and forces & MWFRS for reactions shown; Lumber DOL=1.60 plate grip DOL=1.60
3) TCLL: ASCE 7-16; Pr=20.0 psf (roof LL: Lum DOL=1.15 Plate DOL=1.15); Pf=20.0 psf (Lum DOL=1.15 Plate DOL=1.15); Is=1.0; Rough Cat B; Partially Exp.; Ce=1.0; Cs=1.00; Ct=1.10
4) Unbalanced snow loads have been considered for this design.
5) Gable requires continuous bottom chord bearing.
6) This truss has been designed for a 10.0 psf bottom chord live load nonconcurrent with any other live loads.
7) * This truss has been designed for a live load of 30.0psf on the bottom chord in all areas where a rectangle 3-6-0 tall by 1-0-0 wide will fit between the bottom chord and any other members.
8) Provide mechanical connection (by others) of truss to bearing plate capable of withstanding 100 lb uplift at joint(s) 1, 3.
9) Graphical bracing representation does not depict the size, type or the orientation of the brace on the member. Symbol only indicates that the member must be braced.
10) Bearing symbols are only graphical representations of a possible bearing condition. Bearing symbols are not considered in the structural design of the truss to support the loads indicated.
11) Web bracing shown is for lateral support of individual web members only. Refer to BCSI - Guide to Good Practice for Handling, Installing, Restraining & Bracing of Metal Plate Connected Wood Trusses for additional bracing guidelines, including diagonal bracing.
12) SEE BCSI-B3 SUMMARY SHEET- PERMANENT RESTRAING/BRACING OF CHORDS & WEB MEMBERS FOR RECOMMENDED MINIMUM BRACING REQUIREMENTS OF TOP CHORD, BOTTOM CHORD, AND WEB PLANES. IN ADDITION TO THESE MINIMUM GUIDELINES, ALWAYS CONSULT THE PROJECT ARCHITECT OR ENGINEER FOR ADDITIONAL BRACING CONSIDERATIONS.

LOAD CASE(S) Standard

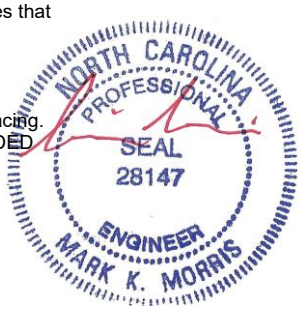

1/15/2024

Job	Truss	Truss Type	Qty	Ply	LOT 91 PROVIDENCE CREEK | 59 DAVINHALL DRIVE FUQUAY-VARINA, NC
24-0290-R01	V12	Valley	1	1	Job Reference (optional) **# 44170**

Run: 8.430 s Feb 12 2021 Print: 8.430 s Feb 12 2021 MiTek Industries, Inc. Tue Jan 16 14:50:54 2024 Page 1
ID:1EhuSslMpTbkFHTWLa5hq6ypz0?-J5aftJ3ZDJTiynYCFq70ym6Kxjm9dfQtGxliRkzum7V

Scale = 1:19.2

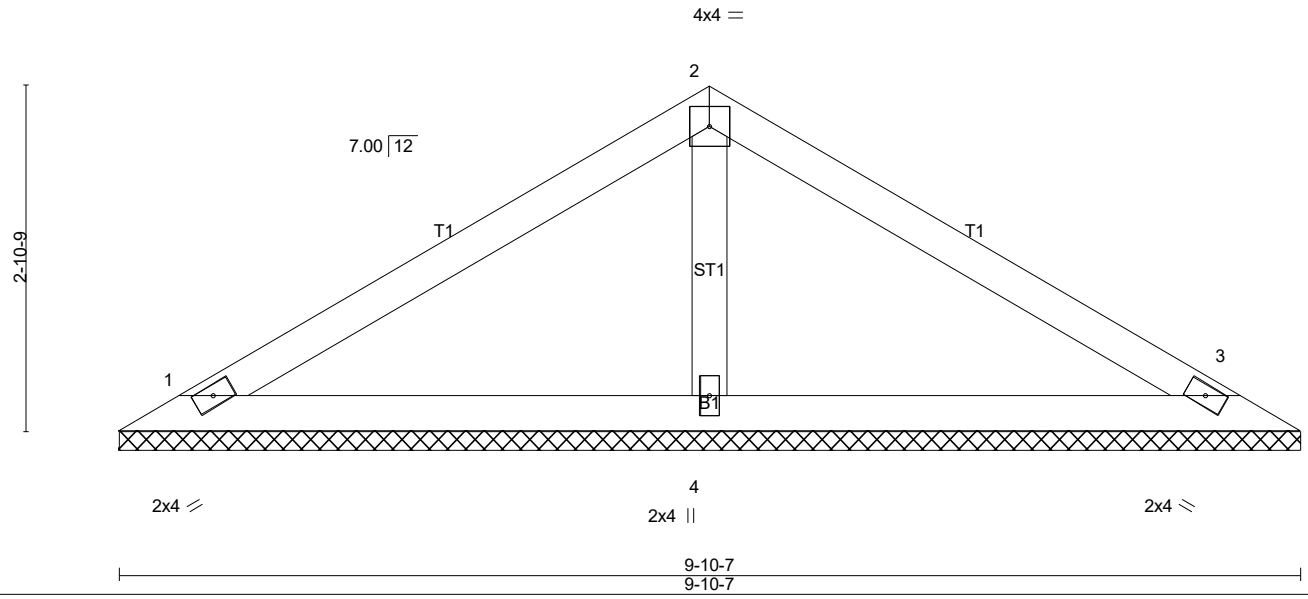

LOADING (psf)		SPACING- 2-0-0	CSI.		DEFL.	in	(loc)	l/defl	L/d	PLATES	GRIP
TCLL (roof)	20.0	Plate Grip DOL 1.15	TC	0.42	Vert(LL)	n/a	-	n/a	999	MT20	244/190
Snow (Pf)	20.0	Lumber DOL 1.15	BC	0.32	Vert(CT)	n/a	-	n/a	999		
TCDL	10.0	Rep Stress Incr YES	WB	0.06	Horz(CT)	0.00	3	n/a	n/a		
BCLL	0.0 *	Code IRC2021/TPI2014	Matrix-S							Weight: 33 lb	FT = 20%
BCDL	10.0										

LUMBER-
TOP CHORD 2x4 SP No.2
BOT CHORD 2x4 SP No.3
OTHERS 2x4 SP No.3

BRACING-
TOP CHORD Structural wood sheathing directly applied or 6-0-0 oc purlins.
BOT CHORD Rigid ceiling directly applied or 10-0-0 oc bracing.

MiTek recommends that Stabilizers and required cross bracing be installed during truss erection, in accordance with Stabilizer Installation guide.

REACTIONS. (lb/size) 1=166/9-10-7 (min. 0-1-8), 3=166/9-10-7 (min. 0-1-8), 4=371/9-10-7 (min. 0-1-8)
Max Horz 1=-50(LC 10)
Max Uplift1=-24(LC 14), 3=-31(LC 15), 4=-6(LC 14)
Max Grav 1=241(LC 20), 3=241(LC 21), 4=384(LC 20)

FORCES. (lb) - Max. Comp./Max. Ten. - All forces 250 (lb) or less except when shown.
WEBS 2-4=-255/85

NOTES- (9-12)
1) Unbalanced roof live loads have been considered for this design.
2) Wind: ASCE 7-16; Vult=120mph (3-second gust) Vasd=95mph; TCDL=5.0psf; BCDL=5.0psf; h=23ft; Cat. II; Exp B; Enclosed; MWFRS (envelope) gable end zone and C-C Exterior(2E) zone; cantilever left and right exposed ; end vertical left and right exposed;C-C for members and forces & MWFRS for reactions shown; Lumber DOL=1.60 plate grip DOL=1.60
3) TCLL: ASCE 7-16; Pr=20.0 psf (roof LL: Lum DOL=1.15 Plate DOL=1.15); Pf=20.0 psf (Lum DOL=1.15 Plate DOL=1.15); Is=1.0; Rough Cat B; Partially Exp.; Ce=1.0; Cs=1.00; Ct=1.10
4) Unbalanced snow loads have been considered for this design.
5) Gable requires continuous bottom chord bearing.
6) This truss has been designed for a 10.0 psf bottom chord live load nonconcurrent with any other live loads.
7) * This truss has been designed for a live load of 30.0psf on the bottom chord in all areas where a rectangle 3-6-0 tall by 1-0-0 wide will fit between the bottom chord and any other members.
8) Provide mechanical connection (by others) of truss to bearing plate capable of withstanding 100 lb uplift at joint(s) 1, 3, 4.
9) Graphical bracing representation does not depict the size, type or the orientation of the brace on the member. Symbol only indicates that the member must be braced.
10) Bearing symbols are only graphical representations of a possible bearing condition. Bearing symbols are not considered in the structural design of the truss to support the loads indicated.
11) Web bracing shown is for lateral support of individual web members only. Refer to BCSI - Guide to Good Practice for Handling, Installing, Restraining & Bracing of Metal Plate Connected Wood Trusses for additional bracing guidelines, including diagonal bracing.
12) SEE BCSI-B3 SUMMARY SHEET- PERMANENT RESTRAING/BRACING OF CHORDS & WEB MEMBERS FOR RECOMMENDED MINIMUM BRACING REQUIREMENTS OF TOP CHORD, BOTTOM CHORD, AND WEB PLANES. IN ADDITION TO THESE MINIMUM GUIDELINES, ALWAYS CONSULT THE PROJECT ARCHITECT OR ENGINEER FOR ADDITIONAL BRACING CONSIDERATIONS.

LOAD CASE(S) Standard

NORTH CAROLINA PROFESSIONAL SEAL 28147 ENGINEER MARK K. MORRIS

1/15/2024

Job	Truss	Truss Type	Qty	Ply	LOT 91 PROVIDENCE CREEK | 59 DAVINHALL DRIVE FUQUAY-VARINA, NC
24-0290-R01	V13	Valley	1	1	Job Reference (optional) **# 44170**

Run: 8.430 s Feb 12 2021 Print: 8.430 s Feb 12 2021 MiTek Industries, Inc. Tue Jan 16 14:50:55 2024 Page 1
ID:1EhuSslMpTbkFHTWLa5hq6ypz0?-nH814f4C_cbZax7OpXeFUzfYc686M640Vb1FzAzum7U

Scale = 1:14.5

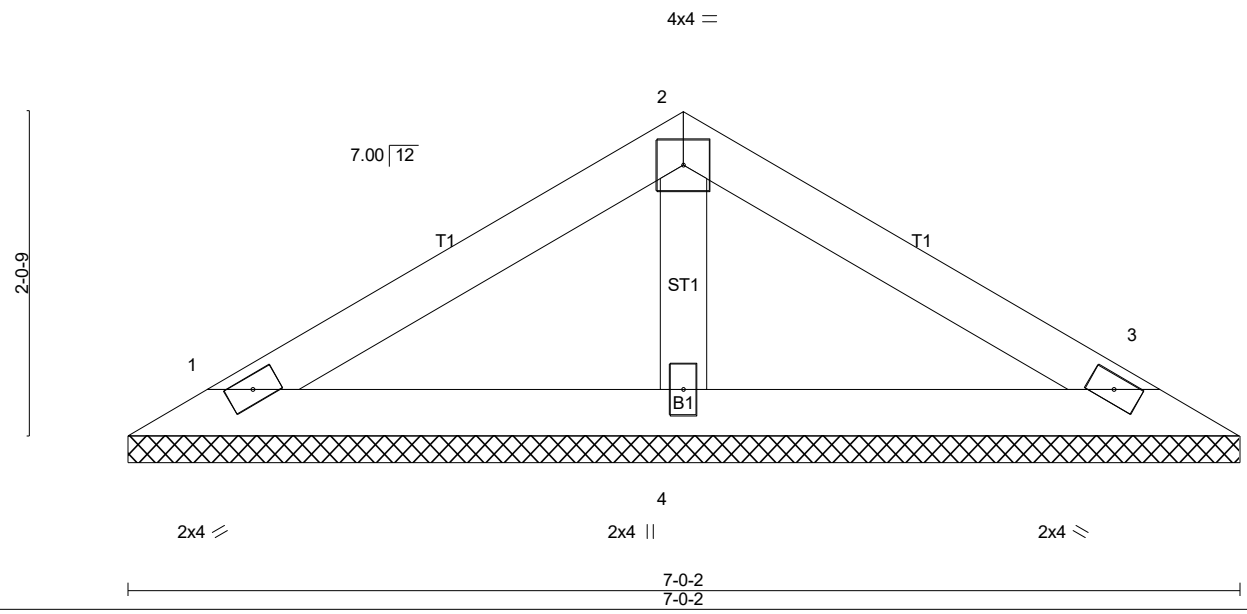

LOADING (psf)		SPACING-	2-0-0	CSI.		DEFL.	in	(loc)	l/defl	L/d	PLATES	GRIP
TCLL (roof)	20.0	Plate Grip DOL	1.15	TC	0.24	Vert(LL)	n/a	-	n/a	999	MT20	244/190
Snow (Pf)	20.0	Lumber DOL	1.15	BC	0.15	Vert(CT)	n/a	-	n/a	999		
TCDL	10.0	Rep Stress Incr	YES	WB	0.03	Horz(CT)	0.00	3	n/a	n/a		
BCLL	0.0 *	Code IRC2021/TPI2014		Matrix-P							Weight: 23 lb	FT = 20%
BCDL	10.0											

LUMBER-
TOP CHORD 2x4 SP No.2
BOT CHORD 2x4 SP No.3
OTHERS 2x4 SP No.3

BRACING-
TOP CHORD Structural wood sheathing directly applied or 6-0-0 oc purlins.
BOT CHORD Rigid ceiling directly applied or 10-0-0 oc bracing.

MiTek recommends that Stabilizers and required cross bracing be installed during truss erection, in accordance with Stabilizer Installation guide.

REACTIONS. (lb/size) 1=124/7-0-2 (min. 0-1-8), 3=124/7-0-2 (min. 0-1-8), 4=227/7-0-2 (min. 0-1-8)
Max Horz 1=-34(LC 10)
Max Uplift1=-21(LC 14), 3=-25(LC 15)
Max Grav 1=165(LC 20), 3=165(LC 21), 4=227(LC 1)

FORCES. (lb) - Max. Comp./Max. Ten. - All forces 250 (lb) or less except when shown.

NOTES- (9-12)
1) Unbalanced roof live loads have been considered for this design.
2) Wind: ASCE 7-16; Vult=120mph (3-second gust) Vasd=95mph; TCDL=5.0psf; BCDL=5.0psf; h=23ft; Cat. II; Exp B; Enclosed; MWFRS (envelope) gable end zone and C-C Exterior(2E) zone; cantilever left and right exposed ; end vertical left and right exposed;C-C for members and forces & MWFRS for reactions shown; Lumber DOL=1.60 plate grip DOL=1.60
3) TCLL: ASCE 7-16; Pr=20.0 psf (roof LL: Lum DOL=1.15 Plate DOL=1.15); Pf=20.0 psf (Lum DOL=1.15 Plate DOL=1.15); Is=1.0; Rough Cat B; Partially Exp.; Ce=1.0; Cs=1.00; Ct=1.10
4) Unbalanced snow loads have been considered for this design.
5) Gable requires continuous bottom chord bearing.
6) This truss has been designed for a 10.0 psf bottom chord live load nonconcurrent with any other live loads.
7) * This truss has been designed for a live load of 30.0psf on the bottom chord in all areas where a rectangle 3-6-0 tall by 1-0-0 wide will fit between the bottom chord and any other members.
8) Provide mechanical connection (by others) of truss to bearing plate capable of withstanding 100 lb uplift at joint(s) 1, 3.
9) Graphical bracing representation does not depict the size, type or the orientation of the brace on the member. Symbol only indicates that the member must be braced.
10) Bearing symbols are only graphical representations of a possible bearing condition. Bearing symbols are not considered in the structural design of the truss to support the loads indicated.
11) Web bracing shown is for lateral support of individual web members only. Refer to BCSI - Guide to Good Practice for Handling, Installing, Restraining & Bracing of Metal Plate Connected Wood Trusses for additional bracing guidelines, including diagonal bracing.
12) SEE BCSI-B3 SUMMARY SHEET- PERMANENT RESTRAING/BRACING OF CHORDS & WEB MEMBERS FOR RECOMMENDED MINIMUM BRACING REQUIREMENTS OF TOP CHORD, BOTTOM CHORD, AND WEB PLANES. IN ADDITION TO THESE MINIMUM GUIDELINES, ALWAYS CONSULT THE PROJECT ARCHITECT OR ENGINEER FOR ADDITIONAL BRACING CONSIDERATIONS.

LOAD CASE(S) Standard

NORTH CAROLINA PROFESSIONAL SEAL 28147 ENGINEER MARK K. MORRIS

1/15/2024

Job	Truss	Truss Type	Qty	Ply	LOT 91 PROVIDENCE CREEK | 59 DAVINHALL DRIVE FUQUAY-VARINA, NC
24-0290-R01	V14	Valley	1	1	Job Reference (optional) **# 44170**

Run: 8.430 s Feb 12 2021 Print: 8.430 s Feb 12 2021 MiTek Industries, Inc. Tue Jan 16 14:50:55 2024 Page 1
ID:1EhuSslMpTbkFHTWLa5hq6ypz0?-nH814f4C_cbZax7OpXeFUzfbU67RM6Z0Vb1FzAzum7U

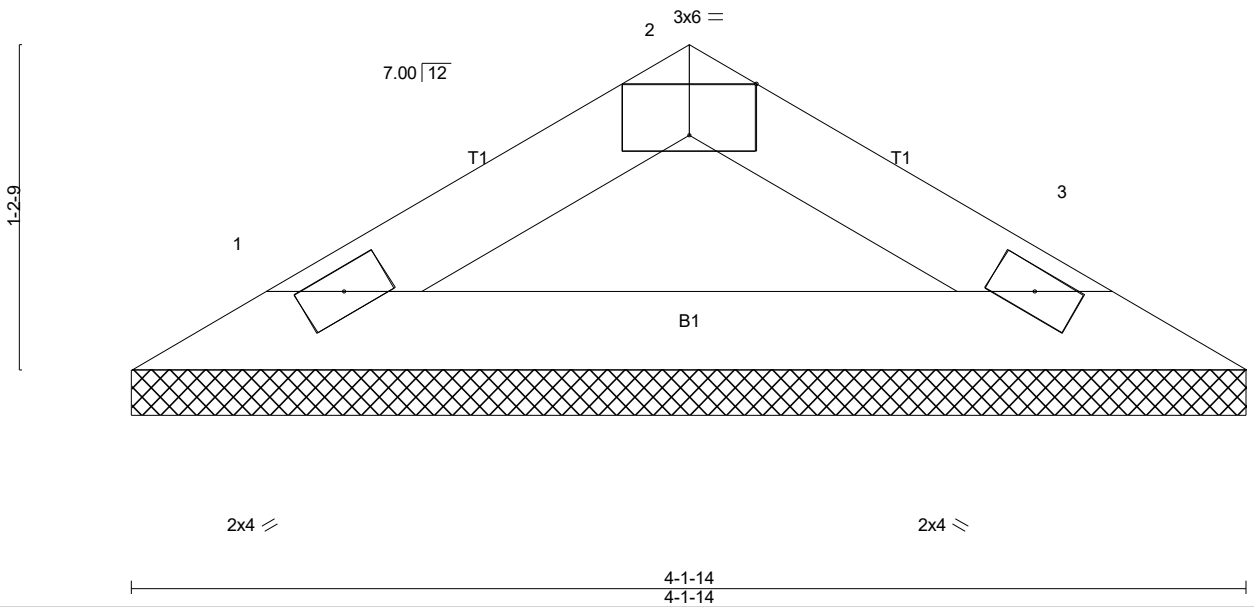

Plate Offsets (X,Y)-- [2:0-3-0,Edge]

LOADING (psf)		**SPACING-** 2-0-0	**CSI.**	**DEFL.** in (loc) l/defl L/d	**PLATES**	**GRIP**
TCLL (roof)	20.0	Plate Grip DOL 1.15	TC 0.05	Vert(LL) n/a - n/a 999	MT20	244/190
Snow (Pf)	20.0	Lumber DOL 1.15	BC 0.19	Vert(CT) n/a - n/a 999		
TCDL	10.0	Rep Stress Incr YES	WB 0.00	Horz(CT) 0.00 3 n/a n/a		
BCLL	0.0 *	Code IRC2021/TPI2014	Matrix-P		Weight: 12 lb	FT = 20%
BCDL	10.0					

LUMBER-
TOP CHORD 2x4 SP No.2
BOT CHORD 2x4 SP No.3

BRACING-
TOP CHORD Structural wood sheathing directly applied or 4-1-14 oc purlins.
BOT CHORD Rigid ceiling directly applied or 10-0-0 oc bracing.

MiTek recommends that Stabilizers and required cross bracing be installed during truss erection, in accordance with Stabilizer Installation guide.

REACTIONS. (lb/size) 1=123/4-1-14 (min. 0-1-8), 3=123/4-1-14 (min. 0-1-8)
Max Horz 1=-18(LC 12)
Max Uplift1=-9(LC 14), 3=-9(LC 15)
Max Grav 1=135(LC 20), 3=135(LC 21)

FORCES. (lb) - Max. Comp./Max. Ten. - All forces 250 (lb) or less except when shown.

NOTES- (9-12)
1) Unbalanced roof live loads have been considered for this design.
2) Wind: ASCE 7-16; Vult=120mph (3-second gust) Vasd=95mph; TCDL=5.0psf; BCDL=5.0psf; h=23ft; Cat. II; Exp B; Enclosed; MWFRS (envelope) gable end zone and C-C Exterior(2E) zone; cantilever left and right exposed ; end vertical left and right exposed;C-C for members and forces & MWFRS for reactions shown; Lumber DOL=1.60 plate grip DOL=1.60
3) TCLL: ASCE 7-16; Pr=20.0 psf (roof LL: Lum DOL=1.15 Plate DOL=1.15); Pf=20.0 psf (Lum DOL=1.15 Plate DOL=1.15); Is=1.0; Rough Cat B; Partially Exp.; Ce=1.0; Cs=1.00; Ct=1.10
4) Unbalanced snow loads have been considered for this design.
5) Gable requires continuous bottom chord bearing.
6) This truss has been designed for a 10.0 psf bottom chord live load nonconcurrent with any other live loads.
7) * This truss has been designed for a live load of 30.0psf on the bottom chord in all areas where a rectangle 3-6-0 tall by 1-0-0 wide will fit between the bottom chord and any other members.
8) Provide mechanical connection (by others) of truss to bearing plate capable of withstanding 100 lb uplift at joint(s) 1, 3.
9) Graphical bracing representation does not depict the size, type or the orientation of the brace on the member. Symbol only indicates that the member must be braced.
10) Bearing symbols are only graphical representations of a possible bearing condition. Bearing symbols are not considered in the structural design of the truss to support the loads indicated.
11) Web bracing shown is for lateral support of individual web members only. Refer to BCSI - Guide to Good Practice for Handling, Installing, Restraining & Bracing of Metal Plate Connected Wood Trusses for additional bracing guidelines, including diagonal bracing.
12) SEE BCSI-B3 SUMMARY SHEET- PERMANENT RESTRAING/BRACING OF CHORDS & WEB MEMBERS FOR RECOMMENDED MINIMUM BRACING REQUIREMENTS OF TOP CHORD, BOTTOM CHORD, AND WEB PLANES. IN ADDITION TO THESE MINIMUM GUIDELINES, ALWAYS CONSULT THE PROJECT ARCHITECT OR ENGINEER FOR ADDITIONAL BRACING CONSIDERATIONS.

LOAD CASE(S) Standard

NORTH CAROLINA PROFESSIONAL SEAL 28147 ENGINEER MARK K. MORRIS

1/15/2024

Job	Truss	Truss Type	Qty	Ply	LOT 91 PROVIDENCE CREEK | 59 DAVINHALL DRIVE FUQUAY-VARINA, NC
24-0290-R01	V15	GABLE	1	1	Job Reference (optional) **# 44170**

Run: 8.430 s Feb 12 2021 Print: 8.430 s Feb 12 2021 MiTek Industries, Inc. Tue Jan 16 14:50:55 2024 Page 1
ID:1EhuSslMpTbkFHTWLa5hq6ypz0?-nH814f4C_cbZax7OpXeFUzfXy68cM6?0Vb1FzAzum7U

4-0-0 | 8-0-0
4-0-0 | 4-0-0

Scale = 1:14.2

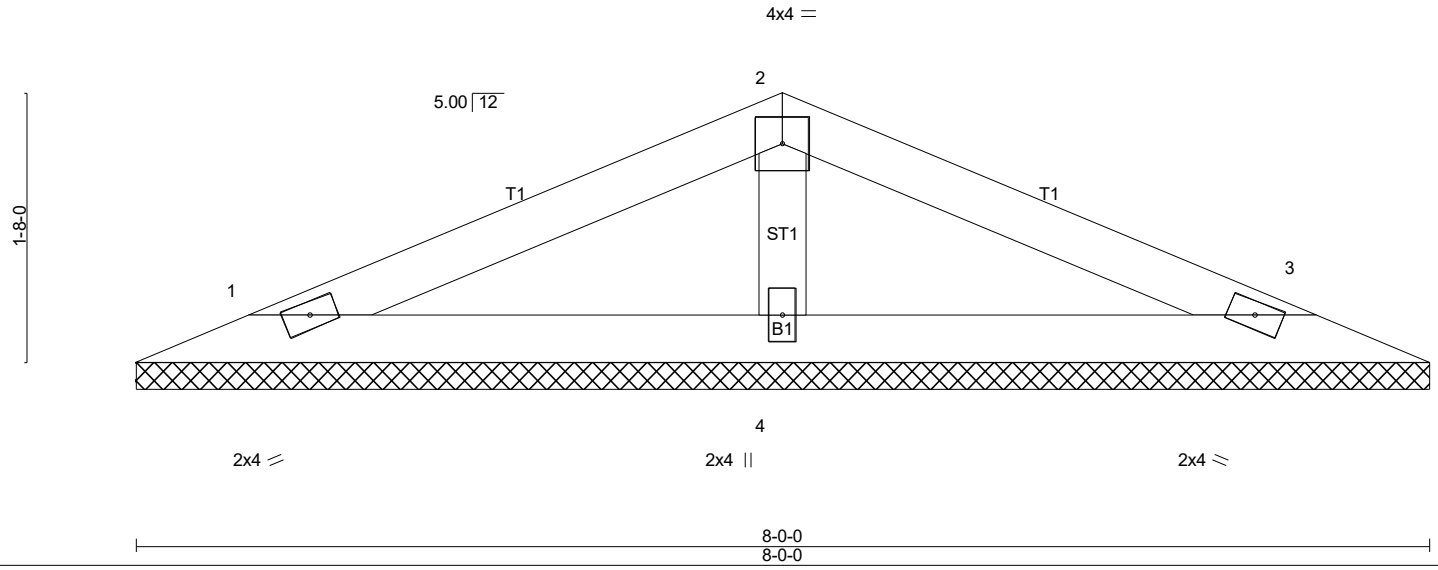

LOADING (psf)		**SPACING-** 2-0-0	**CSI.**	**DEFL.** in (loc) l/defl L/d	**PLATES**	**GRIP**
TCLL (roof)	20.0	Plate Grip DOL 1.15	TC 0.28	Vert(LL) n/a - n/a 999	MT20	244/190
Snow (Pf)	20.0	Lumber DOL 1.15	BC 0.18	Vert(CT) n/a - n/a 999		
TCDL	10.0	Rep Stress Incr YES	WB 0.04	Horz(CT) 0.00 3 n/a n/a		
BCLL	0.0 *	Code IRC2021/TPI2014	Matrix-P		Weight: 24 lb	FT = 20%
BCDL	10.0					

LUMBER-
TOP CHORD 2x4 SP No.2
BOT CHORD 2x4 SP No.3
OTHERS 2x4 SP No.3

BRACING-
TOP CHORD Structural wood sheathing directly applied or 6-0-0 oc purlins.
BOT CHORD Rigid ceiling directly applied or 10-0-0 oc bracing.

MiTek recommends that Stabilizers and required cross bracing be installed during truss erection, in accordance with Stabilizer Installation guide.

REACTIONS. (lb/size) 1=129/8-0-0 (min. 0-1-8), 3=129/8-0-0 (min. 0-1-8), 4=266/8-0-0 (min. 0-1-8)
Max Horz 1=18(LC 18)
Max Uplift1=-22(LC 14), 3=-25(LC 15)
Max Grav 1=169(LC 20), 3=169(LC 21), 4=266(LC 1)

FORCES. (lb) - Max. Comp./Max. Ten. - All forces 250 (lb) or less except when shown.

NOTES- (9-12)
1) Unbalanced roof live loads have been considered for this design.
2) Wind: ASCE 7-16; Vult=120mph (3-second gust) Vasd=95mph; TCDL=5.0psf; BCDL=5.0psf; h=23ft; Cat. II; Exp B; Enclosed; MWFRS (envelope) gable end zone and C-C Exterior(2E) zone; cantilever left and right exposed ; end vertical left and right exposed;C-C for members and forces & MWFRS for reactions shown; Lumber DOL=1.60 plate grip DOL=1.60
3) TCLL: ASCE 7-16; Pr=20.0 psf (roof LL: Lum DOL=1.15 Plate DOL=1.15); Pf=20.0 psf (Lum DOL=1.15 Plate DOL=1.15); Is=1.0; Rough Cat B; Partially Exp.; Ce=1.0; Cs=1.00; Ct=1.10
4) Unbalanced snow loads have been considered for this design.
5) Gable requires continuous bottom chord bearing.
6) This truss has been designed for a 10.0 psf bottom chord live load nonconcurrent with any other live loads.
7) * This truss has been designed for a live load of 30.0psf on the bottom chord in all areas where a rectangle 3-6-0 tall by 1-0-0 wide will fit between the bottom chord and any other members.
8) Provide mechanical connection (by others) of truss to bearing plate capable of withstanding 100 lb uplift at joint(s) 1, 3.
9) Graphical bracing representation does not depict the size, type or the orientation of the brace on the member. Symbol only indicates that the member must be braced.
10) Bearing symbols are only graphical representations of a possible bearing condition. Bearing symbols are not considered in the structural design of the truss to support the loads indicated.
11) Web bracing shown is for lateral support of individual web members only. Refer to BCSI - Guide to Good Practice for Handling, Installing, Restraining & Bracing of Metal Plate Connected Wood Trusses for additional bracing guidelines, including diagonal bracing.
12) SEE BCSI-B3 SUMMARY SHEET- PERMANENT RESTRAING/BRACING OF CHORDS & WEB MEMBERS FOR RECOMMENDED MINIMUM BRACING REQUIREMENTS OF TOP CHORD, BOTTOM CHORD, AND WEB PLANES. IN ADDITION TO THESE MINIMUM GUIDELINES, ALWAYS CONSULT THE PROJECT ARCHITECT OR ENGINEER FOR ADDITIONAL BRACING CONSIDERATIONS.

LOAD CASE(S) Standard

NORTH CAROLINA PROFESSIONAL SEAL 28147 ENGINEER MARK K. MORRIS

1/15/2024

Job	Truss	Truss Type	Qty	Ply	LOT 91 PROVIDENCE CREEK | 59 DAVINHALL DRIVE FUQUAY-VARINA, NC
24-0290-R01	V16	Valley	1	1	Job Reference (optional) **# 44170**

Run: 8.430 s Feb 12 2021 Print: 8.430 s Feb 12 2021 MiTek Industries, Inc. Tue Jan 16 14:50:56 2024 Page 1
ID:1EhuSslMpTbkFHTWLa5hq6ypz0?-FUiQI?4qlwjQB5ibNE9U1BCmYWUd5ZpAjFnoVdzum7T

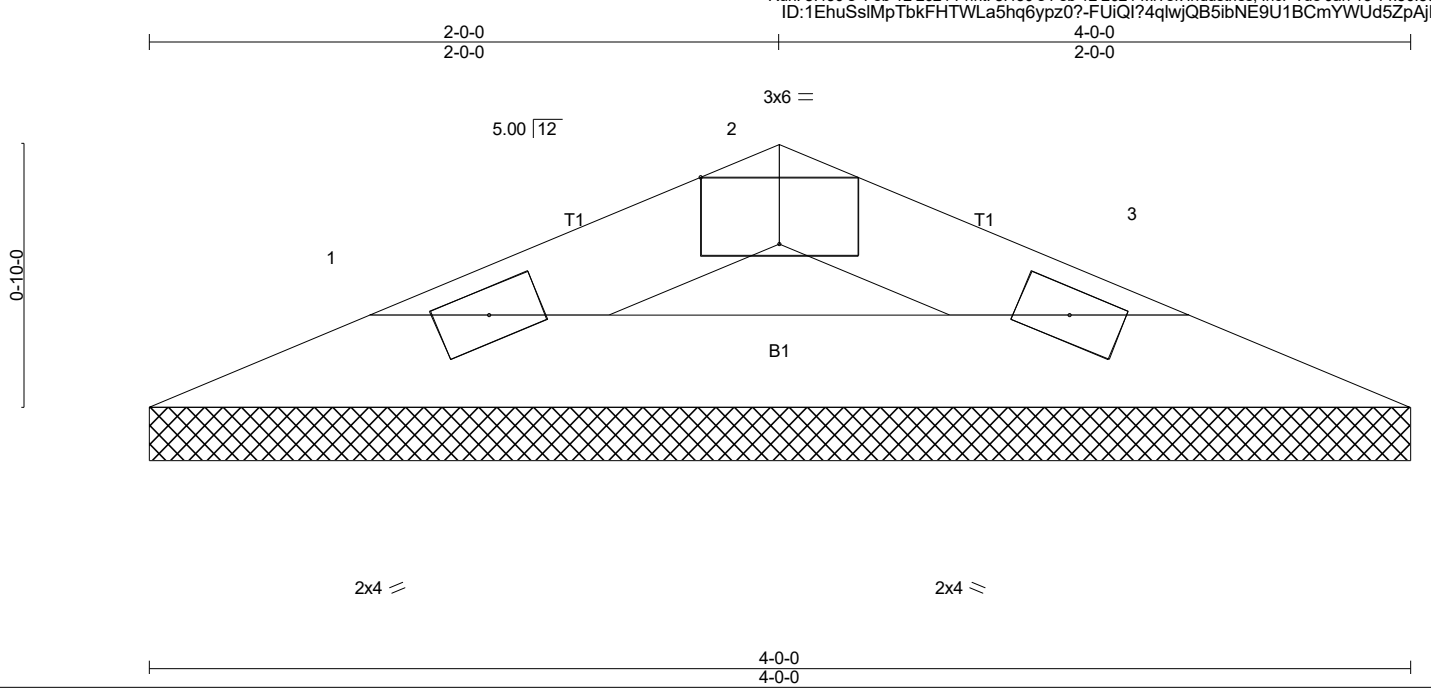

Plate Offsets (X,Y)-- [2:0-3-0,Edge]

LOADING (psf)		**SPACING-** 2-0-0	**CSI.**	**DEFL.** in (loc) l/defl L/d	**PLATES**	**GRIP**
TCLL (roof)	20.0	Plate Grip DOL 1.15	TC 0.03	Vert(LL) n/a - n/a 999	MT20	244/190
Snow (Pf)	20.0	Lumber DOL 1.15	BC 0.13	Vert(CT) n/a - n/a 999		
TCDL	10.0	Rep Stress Incr YES	WB 0.00	Horz(CT) 0.00 3 n/a n/a		
BCLL	0.0 *	Code IRC2021/TPI2014	Matrix-P		Weight: 10 lb	FT = 20%
BCDL	10.0					

LUMBER-
TOP CHORD 2x4 SP No.2
BOT CHORD 2x4 SP No.3

BRACING-
TOP CHORD Structural wood sheathing directly applied or 4-0-0 oc purlins.
BOT CHORD Rigid ceiling directly applied or 10-0-0 oc bracing.

MiTek recommends that Stabilizers and required cross bracing be installed during truss erection, in accordance with Stabilizer Installation guide.

REACTIONS. (lb/size) 1=102/4-0-0 (min. 0-1-8), 3=102/4-0-0 (min. 0-1-8)
Max Horz 1=7(LC 14)
Max Uplift1=-8(LC 14), 3=-8(LC 15)
Max Grav 1=108(LC 20), 3=108(LC 21)

FORCES. (lb) - Max. Comp./Max. Ten. - All forces 250 (lb) or less except when shown.

NOTES- (9-12)
1) Unbalanced roof live loads have been considered for this design.
2) Wind: ASCE 7-16; Vult=120mph (3-second gust) Vasd=95mph; TCDL=5.0psf; BCDL=5.0psf; h=23ft; Cat. II; Exp B; Enclosed; MWFRS (envelope) gable end zone and C-C Exterior(2E) zone; cantilever left and right exposed ; end vertical left and right exposed;C-C for members and forces & MWFRS for reactions shown; Lumber DOL=1.60 plate grip DOL=1.60
3) TCLL: ASCE 7-16; Pr=20.0 psf (roof LL: Lum DOL=1.15 Plate DOL=1.15); Pf=20.0 psf (Lum DOL=1.15 Plate DOL=1.15); Is=1.0; Rough Cat B; Partially Exp.; Ce=1.0; Cs=1.00; Ct=1.10
4) Unbalanced snow loads have been considered for this design.
5) Gable requires continuous bottom chord bearing.
6) This truss has been designed for a 10.0 psf bottom chord live load nonconcurrent with any other live loads.
7) * This truss has been designed for a live load of 30.0psf on the bottom chord in all areas where a rectangle 3-6-0 tall by 1-0-0 wide will fit between the bottom chord and any other members.
8) Provide mechanical connection (by others) of truss to bearing plate capable of withstanding 100 lb uplift at joint(s) 1, 3.
9) Graphical bracing representation does not depict the size, type or the orientation of the brace on the member. Symbol only indicates that the member must be braced.
10) Bearing symbols are only graphical representations of a possible bearing condition. Bearing symbols are not considered in the structural design of the truss to support the loads indicated.
11) Web bracing shown is for lateral support of individual web members only. Refer to BCSI - Guide to Good Practice for Handling, Installing, Restraining & Bracing of Metal Plate Connected Wood Trusses for additional bracing guidelines, including diagonal bracing.
12) SEE BCSI-B3 SUMMARY SHEET- PERMANENT RESTRAING/BRACING OF CHORDS & WEB MEMBERS FOR RECOMMENDED MINIMUM BRACING REQUIREMENTS OF TOP CHORD, BOTTOM CHORD, AND WEB PLANES. IN ADDITION TO THESE MINIMUM GUIDELINES, ALWAYS CONSULT THE PROJECT ARCHITECT OR ENGINEER FOR ADDITIONAL BRACING CONSIDERATIONS.

LOAD CASE(S) Standard

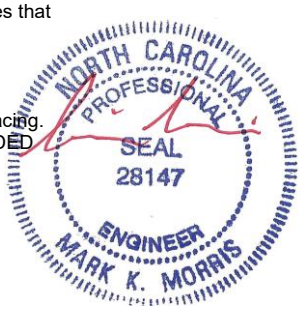

1/15/2024