Mark Morris, P.E.

#126, 1317-M, Summerville, SC 29483
843 209-5784, Fax (866)-213-4614

The truss drawing(s) listed below have been prepared by **Atlantic Building Components** under my direct supervision based on the parameters provided by the truss designers.

AST #: 44079
JOB: 24-0180-R01
JOB NAME: LOT 47 PROVIDENCE CREEK
Wind Code: 37
Wind Speed: Vult= 120mph
Exposure Category: B
Mean Roof Height (feet): 35
These truss designs comply with IRC 2015 as well as IRC 2018.
24 Truss Design(s)

Trusses:
J01, J02, J03, J04, J05, J06, R01, R02, R02A, R03, R04, R05, R06, R07, R08, R09, R10, R11, R12, R13, R14, SP01, SP02, V01

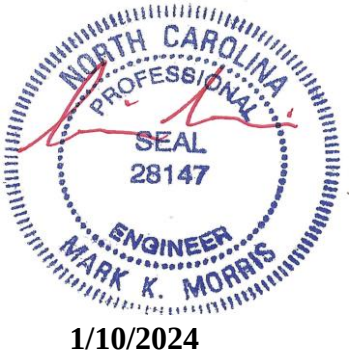

1/10/2024
Mark Morris

Warning !—Verify design parameters and read notes before use.

This design is based only upon parameters shown, and is for an individual building component to be installed and loaded vertically. Applicability of design parameters and proper incorporation of component is responsibility of building designer – not truss designer or truss engineer. Bracing shown is for lateral support of individual web members only. Additional temporary bracing to ensure stability during construction is the responsibility of the erector. Additional permanent bracing of the overall structure is the responsibility of the building designer. For general guidance regarding fabrication, quality control, storage, delivery, erection and bracing, consult ANSI/TPI 1 *National Design Standard for Metal Plate Connected Wood Truss Construction* and BCSI 1-03 Guide to *Good Practice for*

Job	Truss	Truss Type	Qty	Ply	LOT 47 PROVIDENCE CREEK | 239 WINDSWEPT WAY FUQUAY-VARINA, NC
24-0180-R01	J01	Half Hip	1	1	Job Reference (optional) **# 44079**

Run: 8.430 s Feb 12 2021 Print: 8.430 s Feb 12 2021 MiTek Industries, Inc. Fri Jan 12 17:58:04 2024 Page 1
ID:P9Fbno1x1NcL_1BS5_FittyrTtl-Yoe?xcW?q6NwFHizS8I?9uWpb8glAZKX?ZBIeKzw1m1

Scale = 1:24.6

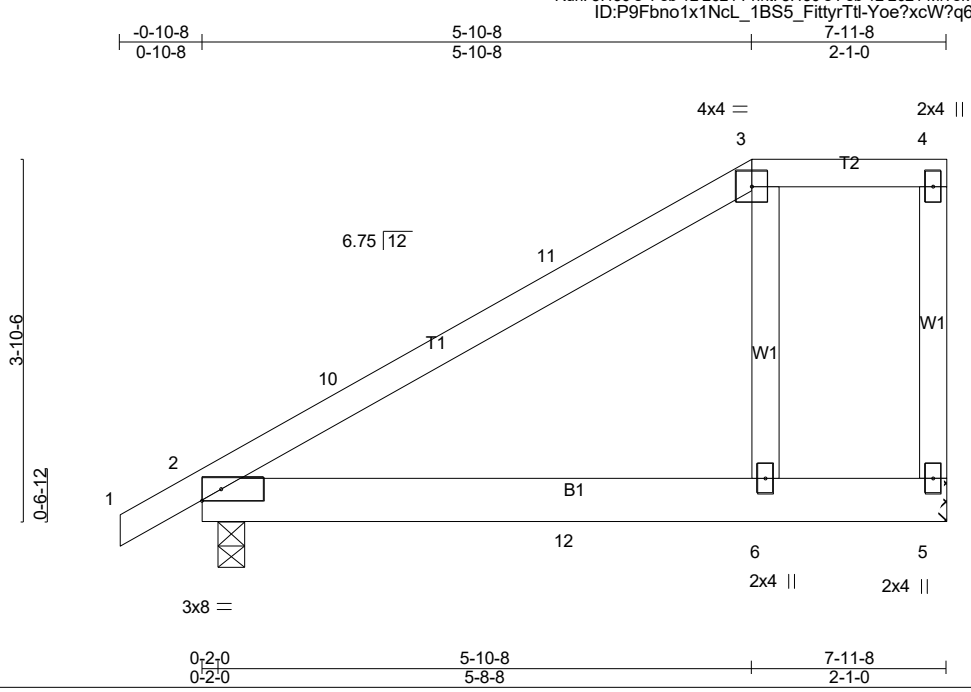

LOADING (psf)		SPACING-	2-0-0	CSI.		DEFL.	in	(loc)	l/defl	L/d	PLATES	GRIP
TCLL (roof)	20.0	Plate Grip DOL	1.15	TC	0.69	Vert(LL)	0.16	6-9	>595	240	MT20	244/190
Snow (Pf)	20.0	Lumber DOL	1.15	BC	0.70	Vert(CT)	-0.22	6-9	>419	180		
TCDL	10.0	Rep Stress Incr	YES	WB	0.08	Horz(CT)	0.02	2	n/a	n/a		
BCLL	0.0 *	Code IRC2021/TPI2014		Matrix-AS							Weight: 43 lb	FT = 20%
BCDL	10.0											

LUMBER-
TOP CHORD 2x4 SP No.2
BOT CHORD 2x6 SP No.2
WEBS 2x4 SP No.3

BRACING-
TOP CHORD Structural wood sheathing directly applied, except end verticals.
BOT CHORD Rigid ceiling directly applied.

MiTek recommends that Stabilizers and required cross bracing be installed during truss erection, in accordance with Stabilizer Installation guide.

REACTIONS. (lb/size) 5=310/Mechanical, 2=368/0-3-8 (min. 0-1-8)
Max Horz 2=124(LC 13)
Max Uplift5=-50(LC 11), 2=-57(LC 14)
Max Grav 5=357(LC 36), 2=563(LC 36)

FORCES. (lb) - Max. Comp./Max. Ten. - All forces 250 (lb) or less except when shown.
WEBS 3-6=-276/103

NOTES- (11-14)
1) Wind: ASCE 7-16; Vult=120mph (3-second gust) Vasd=95mph; TCDL=5.0psf; BCDL=5.0psf; h=35ft; Cat. II; Exp B; Enclosed; MWFRS (envelope) gable end zone and C-C Exterior(2E) -0-10-8 to 3-11-2, Exterior(2R) 3-11-2 to 5-10-8, Exterior(2E) 5-10-8 to 7-9-12 zone; cantilever left and right exposed ; end vertical left and right exposed; porch left exposed;C-C for members and forces & MWFRS for reactions shown; Lumber DOL=1.60 plate grip DOL=1.60
2) TCLL: ASCE 7-16; Pr=20.0 psf (roof LL: Lum DOL=1.15 Plate DOL=1.15); Pf=20.0 psf (Lum DOL=1.15 Plate DOL=1.15); Is=1.0; Rough Cat B; Partially Exp.; Ce=1.0; Cs=1.00; Ct=1.10
3) Unbalanced snow loads have been considered for this design.
4) This truss has been designed for greater of min roof live load of 12.0 psf or 2.00 times flat roof load of 20.0 psf on overhangs non-concurrent with other live loads.
5) Provide adequate drainage to prevent water ponding.
6) This truss has been designed for a 10.0 psf bottom chord live load nonconcurrent with any other live loads.
7) * This truss has been designed for a live load of 30.0psf on the bottom chord in all areas where a rectangle 3-6-0 tall by 1-0-0 wide will fit between the bottom chord and any other members.
8) Refer to girder(s) for truss to truss connections.
9) Provide mechanical connection (by others) of truss to bearing plate capable of withstanding 100 lb uplift at joint(s) 5, 2.
10) This truss design requires that a minimum of 7/16" structural wood sheathing be applied directly to the top chord and 1/2" gypsum sheetrock be applied directly to the bottom chord.
11) Graphical bracing representation does not depict the size, type or the orientation of the brace on the member. Symbol only indicates that the member must be braced.
12) Bearing symbols are only graphical representations of a possible bearing condition. Bearing symbols are not considered in the structural design of the truss to support the loads indicated.
13) Web bracing shown is for lateral support of individual web members only. Refer to BCSI - Guide to Good Practice for Handling, Installing, Restraining & Bracing of Metal Plate Connected Wood Trusses for additional bracing guidelines, including diagonal bracing.
14) SEE BCSI-B3 SUMMARY SHEET- PERMANENT RESTRAING/BRACING OF CHORDS & WEB MEMBERS FOR RECOMMENDED MINIMUM BRACING REQUIREMENTS OF TOP CHORD, BOTTOM CHORD, AND WEB PLANES. IN ADDITION TO THESE MINIMUM GUIDELINES, ALWAYS CONSULT THE PROJECT ARCHITECT OR ENGINEER FOR ADDITIONAL BRACING CONSIDERATIONS.

NORTH CAROLINA PROFESSIONAL SEAL 28147 ENGINEER MARK K. MORRIS

1/10/2024

LOAD CASE(S) Standard

Job	Truss	Truss Type	Qty	Ply	LOT 47 PROVIDENCE CREEK | 239 WINDSWEPT WAY FUQUAY-VARINA, NC
24-0180-R01	J02	Roof Special	1	1	Job Reference (optional) **# 44079**

Run: 8.430 s Feb 12 2021 Print: 8.430 s Feb 12 2021 MiTek Industries, Inc. Fri Jan 12 17:58:05 2024 Page 1
ID:P9Fbno1x1NcL_1BS5_FittyrTtl-0_CO9yWdbQVmtRH90spEh532PX0ov1vhEDwrAmzw1m0

Scale = 1:19.1

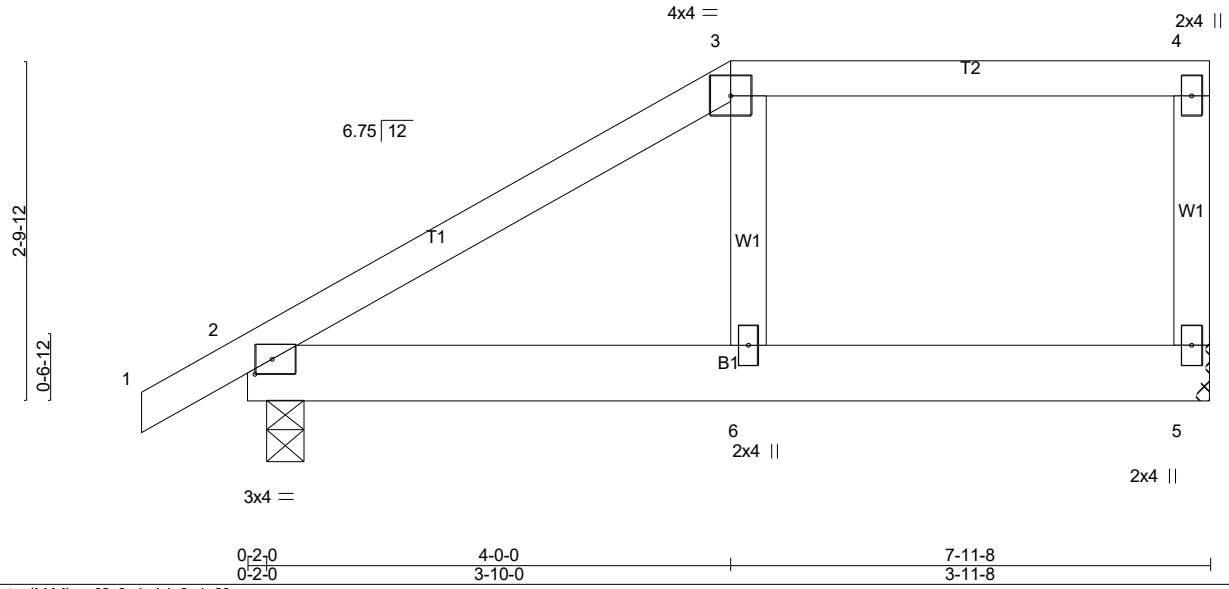

Plate Offsets (X,Y)-- [2:0-1-11,0-1-8]

LOADING (psf)		**SPACING-** 2-0-0	**CSI.**	**DEFL.** in (loc) l/defl L/d	**PLATES**	**GRIP**
TCLL (roof)	20.0	Plate Grip DOL 1.15	TC 0.43	Vert(LL) 0.17 6 >555 240	MT20	244/190
Snow (Pf)	20.0	Lumber DOL 1.15	BC 0.68	Vert(CT) -0.21 6 >446 180		
TCDL	10.0	Rep Stress Incr YES	WB 0.06	Horz(CT) 0.01 2 n/a n/a		
BCLL	0.0 *	Code IRC2021/TPI2014	Matrix-AS		Weight: 39 lb	FT = 20%
BCDL	10.0					

LUMBER-
TOP CHORD 2x4 SP No.2
BOT CHORD 2x6 SP No.2
WEBS 2x4 SP No.3

BRACING-
TOP CHORD Structural wood sheathing directly applied, except end verticals.
BOT CHORD Rigid ceiling directly applied.

MiTek recommends that Stabilizers and required cross bracing be installed during truss erection, in accordance with Stabilizer Installation guide.

REACTIONS. (lb/size) 5=310/Mechanical, 2=368/0-3-8 (min. 0-1-8)
Max Horz 2=88(LC 13)
Max Uplift5=-78(LC 10), 2=-54(LC 14)
Max Grav 5=409(LC 35), 2=513(LC 36)

FORCES. (lb) - Max. Comp./Max. Ten. - All forces 250 (lb) or less except when shown.
WEBS 3-6=-261/114

NOTES- (11-14)
1) Wind: ASCE 7-16; Vult=120mph (3-second gust) Vasd=95mph; TCDL=5.0psf; BCDL=5.0psf; h=35ft; Cat. II; Exp B; Enclosed; MWFRS (envelope) gable end zone and C-C Exterior(2E) zone; cantilever left and right exposed ; end vertical left and right exposed; porch left exposed;C-C for members and forces & MWFRS for reactions shown; Lumber DOL=1.60 plate grip DOL=1.60
2) TCLL: ASCE 7-16; Pr=20.0 psf (roof LL: Lum DOL=1.15 Plate DOL=1.15); Pf=20.0 psf (Lum DOL=1.15 Plate DOL=1.15); Is=1.0; Rough Cat B; Partially Exp.; Ce=1.0; Cs=1.00; Ct=1.10
3) Unbalanced snow loads have been considered for this design.
4) This truss has been designed for greater of min roof live load of 12.0 psf or 2.00 times flat roof load of 20.0 psf on overhangs non-concurrent with other live loads.
5) Provide adequate drainage to prevent water ponding.
6) This truss has been designed for a 10.0 psf bottom chord live load nonconcurrent with any other live loads.
7) * This truss has been designed for a live load of 30.0psf on the bottom chord in all areas where a rectangle 3-6-0 tall by 1-0-0 wide will fit between the bottom chord and any other members.
8) Refer to girder(s) for truss to truss connections.
9) Provide mechanical connection (by others) of truss to bearing plate capable of withstanding 100 lb uplift at joint(s) 5, 2.
10) This truss design requires that a minimum of 7/16" structural wood sheathing be applied directly to the top chord and 1/2" gypsum sheetrock be applied directly to the bottom chord.
11) Graphical bracing representation does not depict the size, type or the orientation of the brace on the member. Symbol only indicates that the member must be braced.
12) Bearing symbols are only graphical representations of a possible bearing condition. Bearing symbols are not considered in the structural design of the truss to support the loads indicated.
13) Web bracing shown is for lateral support of individual web members only. Refer to BCSI - Guide to Good Practice for Handling, Installing, Restraining & Bracing of Metal Plate Connected Wood Trusses for additional bracing guidelines, including diagonal bracing.
14) SEE BCSI-B3 SUMMARY SHEET- PERMANENT RESTRAING/BRACING OF CHORDS & WEB MEMBERS FOR RECOMMENDED MINIMUM BRACING REQUIREMENTS OF TOP CHORD, BOTTOM CHORD, AND WEB PLANES. IN ADDITION TO THESE MINIMUM GUIDELINES, ALWAYS CONSULT THE PROJECT ARCHITECT OR ENGINEER FOR ADDITIONAL BRACING CONSIDERATIONS.

NORTH CAROLINA PROFESSIONAL SEAL 28147 ENGINEER MARK K. MORRIS

1/10/2024

LOAD CASE(S) Standard

Job	Truss	Truss Type	Qty	Ply	LOT 47 PROVIDENCE CREEK | 239 WINDSWEPT WAY FUQUAY-VARINA, NC
24-0180-R01	J03	Roof Special Girder	1	1	Job Reference (optional) **# 44079**

Run: 8.430 s Feb 12 2021 Print: 8.430 s Feb 12 2021 MiTek Industries, Inc. Fri Jan 12 17:58:07 2024 Page 1
ID:P9Fbno1x1NcL_1BS5_FittyrTtl-yNK8aeYu61lU6kRY7HsimW8K8LqfNu2zhXPyEfzw1m_

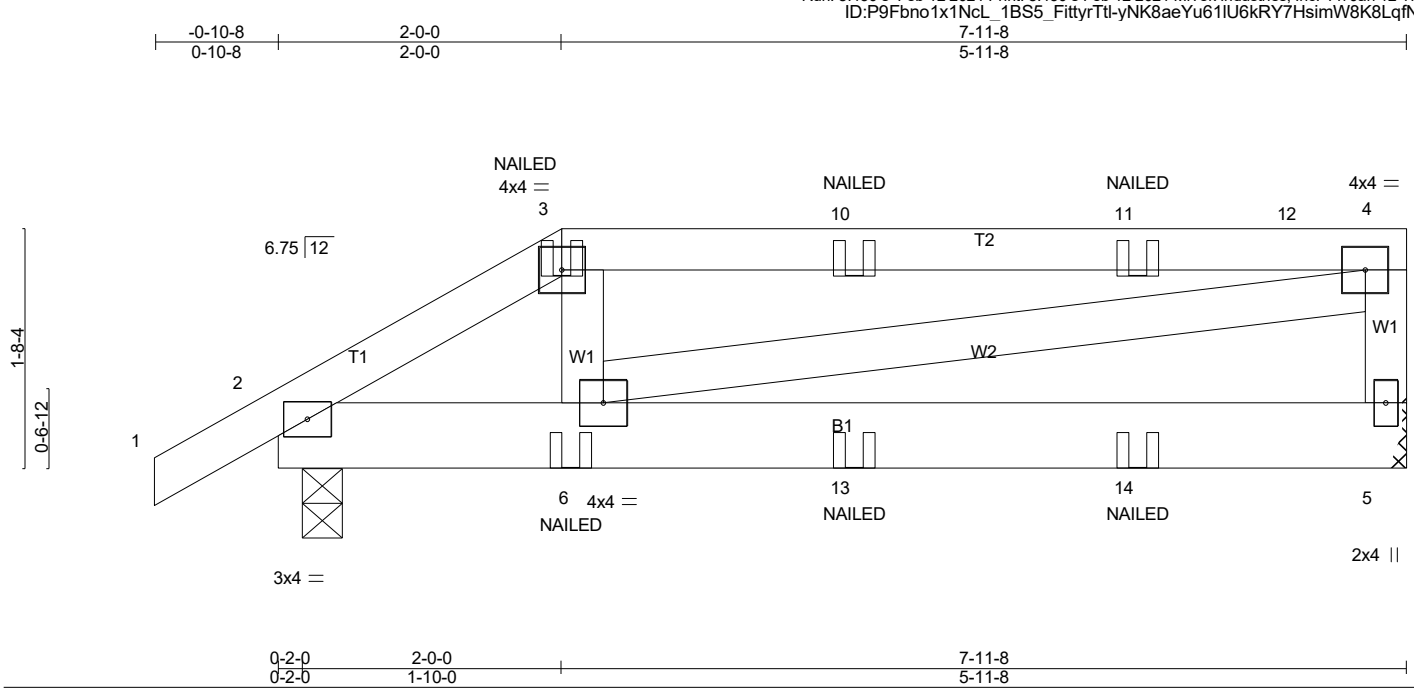

LOADING (psf)		SPACING- 2-0-0		CSI.		DEFL.	in	(loc)	l/defl	L/d	PLATES	GRIP
TCLL (roof)	20.0	Plate Grip DOL	1.15	TC	0.67	Vert(LL)	0.02	5-6	>999	240	MT20	244/190
Snow (Pf)	20.0	Lumber DOL	1.15	BC	0.15	Vert(CT)	-0.03	5-6	>999	180		
TCDL	10.0	Rep Stress Incr	NO	WB	0.21	Horz(CT)	0.00	5	n/a	n/a		
BCLL	0.0 *	Code IRC2021/TPI2014		Matrix-MP							Weight: 43 lb	FT = 20%
BCDL	10.0											

LUMBER-
TOP CHORD 2x4 SP No.2 *Except*
T2: 2x4 SP SS
BOT CHORD 2x6 SP No.2
WEBS 2x4 SP No.3

BRACING-
TOP CHORD Structural wood sheathing directly applied or 6-0-0 oc purlins, except end verticals.
BOT CHORD Rigid ceiling directly applied or 10-0-0 oc bracing.

MiTek recommends that Stabilizers and required cross bracing be installed during truss erection, in accordance with Stabilizer Installation guide.

REACTIONS. (lb/size) 5=333/Mechanical, 2=390/0-3-8 (min. 0-1-8)
Max Horz 2=50(LC 11)
Max Uplift5=-120(LC 8), 2=-82(LC 12)
Max Grav 5=482(LC 33), 2=463(LC 34)

FORCES. (lb) - Max. Comp./Max. Ten. - All forces 250 (lb) or less except when shown.
TOP CHORD 2-3=-587/155, 3-10=-489/131, 10-11=-489/131, 11-12=-489/131, 4-12=-489/131, 4-5=-415/99
BOT CHORD 2-6=-113/492
WEBS 4-6=-122/502

NOTES- (12-15)
1) Wind: ASCE 7-16; Vult=120mph (3-second gust) Vasd=95mph; TCDL=5.0psf; BCDL=5.0psf; h=35ft; Cat. II; Exp B; Enclosed; MWFRS (envelope) gable end zone; cantilever left and right exposed ; end vertical left and right exposed; porch left exposed; Lumber DOL=1.60 plate grip DOL=1.60
2) TCLL: ASCE 7-16; Pr=20.0 psf (roof LL: Lum DOL=1.15 Plate DOL=1.15); Pf=20.0 psf (Lum DOL=1.15 Plate DOL=1.15); Is=1.0; Rough Cat B; Partially Exp.; Ce=1.0; Cs=1.00; Ct=1.10
3) Unbalanced snow loads have been considered for this design.
4) This truss has been designed for greater of min roof live load of 12.0 psf or 2.00 times flat roof load of 20.0 psf on overhangs non-concurrent with other live loads.
5) Provide adequate drainage to prevent water ponding.
6) This truss has been designed for a 10.0 psf bottom chord live load nonconcurrent with any other live loads.
7) * This truss has been designed for a live load of 30.0psf on the bottom chord in all areas where a rectangle 3-6-0 tall by 1-0-0 wide will fit between the bottom chord and any other members.
8) Refer to girder(s) for truss to truss connections.
9) Provide mechanical connection (by others) of truss to bearing plate capable of withstanding 100 lb uplift at joint(s) 2 except (jt=lb) 5=120.
10) "NAILED" indicates 3-10d (0.148"x3") or 3-12d (0.148"x3.25") toe-nails per NDS guidlines.
11) In the LOAD CASE(S) section, loads applied to the face of the truss are noted as front (F) or back (B).

NORTH CAROLINA PROFESSIONAL SEAL 28147 ENGINEER MARK K. MORRIS

1/10/2024

Continued on page 2

12) Graphical bracing representation does not depict the size, type or the orientation of the brace on the member. Symbol only indicates that the member must be braced.
13) Bearing symbols are only graphical representations of a possible bearing condition. Bearing symbols are not considered in the structural design of the truss to support the loads indicated.
14) Web bracing shown is for lateral support of individual web members only. Refer to BCSI - Guide to Good Practice for Handling, Installing, Restraining & Bracing of Metal Plate Connected Wood Trusses for additional bracing guidelines, including diagonal bracing.
15) SEE BCSI-B3 SUMMARY SHEET- PERMANENT RESTRAING/BRACING OF CHORDS & WEB MEMBERS FOR RECOMMENDED MINIMUM BRACING REQUIREMENTS OF TOP CHORD, BOTTOM CHORD, AND WEB PLANES. IN ADDITION TO THESE MINIMUM GUIDELINES, ALWAYS CONSULT THE PROJECT ARCHITECT OR ENGINEER FOR ADDITIONAL BRACING CONSIDERATIONS.

LOAD CASE(S) Standard
1) Dead + Snow (balanced): Lumber Increase=1.15, Plate Increase=1.15
Uniform Loads (plf)
Vert: 1-3=-60, 3-4=-60, 5-7=-20
Concentrated Loads (lb)
Vert: 3=-4(B) 6=-11(B) 10=-4(B) 11=-4(B) 13=-11(B) 14=-11(B)

1/10/2024

Job	Truss	Truss Type	Qty	Ply	LOT 47 PROVIDENCE CREEK | 239 WINDSWEPT WAY FUQUAY-VARINA, NC
24-0180-R01	J04	Jack-Open	3	1	Job Reference (optional) **# 44079**

Run: 8.430 s Feb 12 2021 Print: 8.430 s Feb 12 2021 MiTek Industries, Inc. Fri Jan 12 17:58:08 2024 Page 1
ID:P9Fbno1x1NcL_1BS5_FittyrTtl-RZuWn_ZWtLtLku?kh_NxJkhe0lCn6OX7wB9Vm5zw1Iz

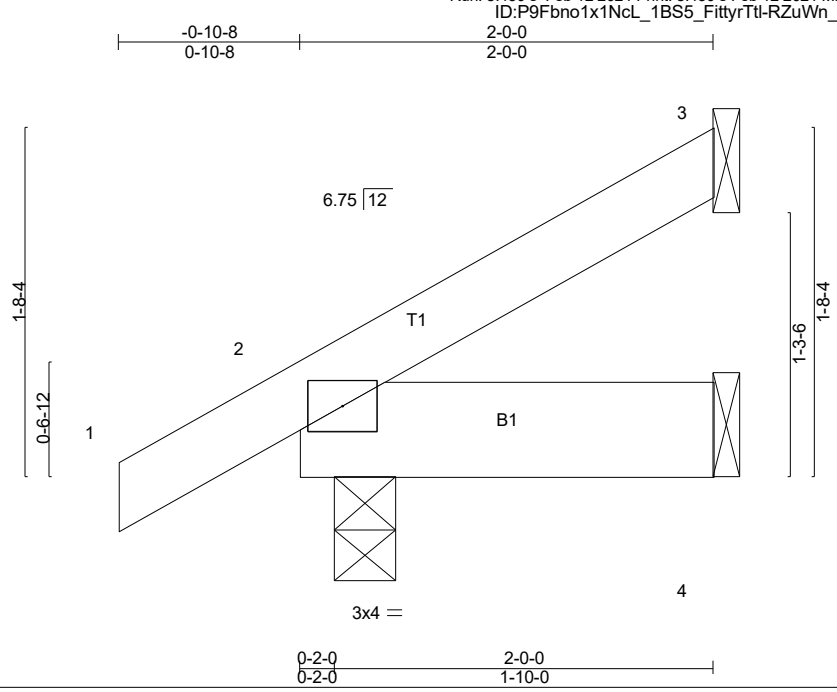

LOADING (psf)		SPACING-	2-0-0	CSI.		DEFL.	in	(loc)	l/defl	L/d	PLATES	GRIP
TCLL (roof)	20.0	Plate Grip DOL	1.15	TC	0.09	Vert(LL)	0.00	7	>999	240	MT20	244/190
Snow (Pf)	20.0	Lumber DOL	1.15	BC	0.02	Vert(CT)	-0.00	7	>999	180		
TCDL	10.0	Rep Stress Incr	YES	WB	0.00	Horz(CT)	-0.00	3	n/a	n/a		
BCLL	0.0 *	Code IRC2021/TPI2014		Matrix-MP							Weight: 10 lb	FT = 20%
BCDL	10.0											

LUMBER-
TOP CHORD 2x4 SP No.2
BOT CHORD 2x6 SP No.2

BRACING-
TOP CHORD Structural wood sheathing directly applied or 2-0-0 oc purlins.
BOT CHORD Rigid ceiling directly applied or 10-0-0 oc bracing.

MiTek recommends that Stabilizers and required cross bracing be installed during truss erection, in accordance with Stabilizer Installation guide.

REACTIONS. (lb/size) 3=41/Mechanical, 4=27/Mechanical, 2=144/0-3-8 (min. 0-1-8)
Max Horz 2=53(LC 14)
Max Uplift3=-24(LC 14), 4=-11(LC 11), 2=-22(LC 14)
Max Grav 3=58(LC 21), 4=40(LC 7), 2=199(LC 21)

FORCES. (lb) - Max. Comp./Max. Ten. - All forces 250 (lb) or less except when shown.

NOTES- (9-12)
1) Wind: ASCE 7-16; Vult=120mph (3-second gust) Vasd=95mph; TCDL=5.0psf; BCDL=5.0psf; h=35ft; Cat. II; Exp B; Enclosed; MWFRS (envelope) gable end zone and C-C Exterior(2E) zone; cantilever left and right exposed ; end vertical left and right exposed; porch left exposed;C-C for members and forces & MWFRS for reactions shown; Lumber DOL=1.60 plate grip DOL=1.60
2) TCLL: ASCE 7-16; Pr=20.0 psf (roof LL: Lum DOL=1.15 Plate DOL=1.15); Pf=20.0 psf (Lum DOL=1.15 Plate DOL=1.15); Is=1.0; Rough Cat B; Partially Exp.; Ce=1.0; Cs=1.00; Ct=1.10
3) Unbalanced snow loads have been considered for this design.
4) This truss has been designed for greater of min roof live load of 12.0 psf or 2.00 times flat roof load of 20.0 psf on overhangs non-concurrent with other live loads.
5) This truss has been designed for a 10.0 psf bottom chord live load nonconcurrent with any other live loads.
6) * This truss has been designed for a live load of 30.0psf on the bottom chord in all areas where a rectangle 3-6-0 tall by 1-0-0 wide will fit between the bottom chord and any other members.
7) Refer to girder(s) for truss to truss connections.
8) Provide mechanical connection (by others) of truss to bearing plate capable of withstanding 100 lb uplift at joint(s) 3, 4, 2.
9) Graphical bracing representation does not depict the size, type or the orientation of the brace on the member. Symbol only indicates that the member must be braced.
10) Bearing symbols are only graphical representations of a possible bearing condition. Bearing symbols are not considered in the structural design of the truss to support the loads indicated.
11) Web bracing shown is for lateral support of individual web members only. Refer to BCSI - Guide to Good Practice for Handling, Installing, Restraining & Bracing of Metal Plate Connected Wood Trusses for additional bracing guidelines, including diagonal bracing.
12) SEE BCSI-B3 SUMMARY SHEET- PERMANENT RESTRAING/BRACING OF CHORDS & WEB MEMBERS FOR RECOMMENDED MINIMUM BRACING REQUIREMENTS OF TOP CHORD, BOTTOM CHORD, AND WEB PLANES. IN ADDITION TO THESE MINIMUM GUIDELINES, ALWAYS CONSULT THE PROJECT ARCHITECT OR ENGINEER FOR ADDITIONAL BRACING CONSIDERATIONS.

LOAD CASE(S) Standard

NORTH CAROLINA PROFESSIONAL SEAL 28147 ENGINEER MARK K. MORRIS

1/10/2024

Job	Truss	Truss Type	Qty	Ply	LOT 47 PROVIDENCE CREEK | 239 WINDSWEPT WAY FUQUAY-VARINA, NC
24-0180-R01	J05	Jack-Closed Girder	2	2	Job Reference (optional) **# 44079**

Run: 8.430 s Feb 12 2021 Print: 8.430 s Feb 12 2021 MiTek Industries, Inc. Fri Jan 12 17:58:10 2024 Page 1
ID:P9Fbno1x1NcL_1BS5_FittyrTtl-Ny?GCfamPy83zC96pPPPO9mw3Yl4aI1QNVecq_zw1lx

Scale = 1:21.5

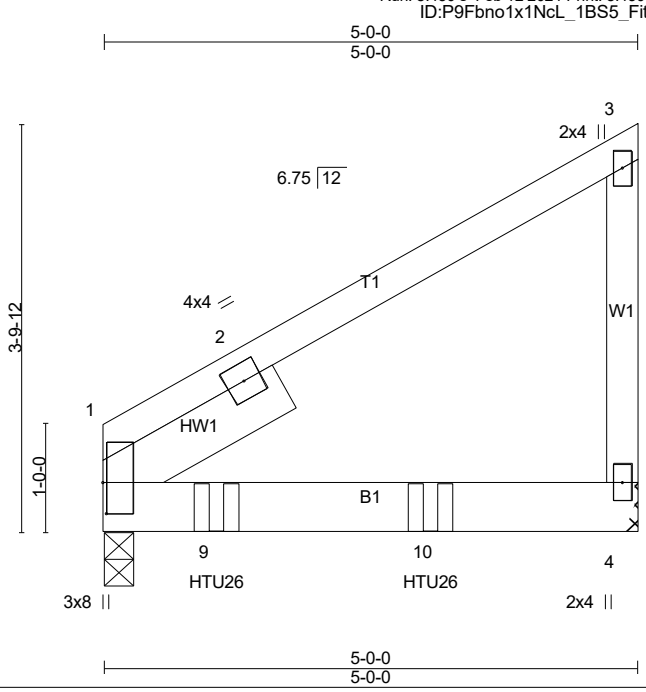

Plate Offsets (X,Y)-- [1:0-3-8,0-0-6]

LOADING (psf)		**SPACING-** 2-0-0	**CSI.**	**DEFL.** in (loc) l/defl L/d	**PLATES**	**GRIP**
TCLL (roof)	20.0	Plate Grip DOL 1.15	TC 0.37	Vert(LL) -0.04 4-7 >999 240	MT20	244/190
Snow (Pf)	20.0	Lumber DOL 1.15	BC 0.55	Vert(CT) -0.07 4-7 >885 180		
TCDL	10.0	Rep Stress Incr NO	WB 0.00	Horz(CT) 0.03 1 n/a n/a		
BCLL	0.0 *	Code IRC2021/TPI2014	Matrix-MP		Weight: 59 lb	FT = 20%
BCDL	10.0					

LUMBER-
TOP CHORD 2x4 SP No.2
BOT CHORD 2x6 SP No.2
WEBS 2x4 SP No.3
SLIDER Left 2x6 SP No.2 -Ø 1-11-0

BRACING-
TOP CHORD Structural wood sheathing directly applied or 5-0-0 oc purlins, except end verticals.
BOT CHORD Rigid ceiling directly applied or 10-0-0 oc bracing.

REACTIONS. (lb/size) 1=826/0-3-8 (min. 0-1-8), 4=661/Mechanical
Max Horz 1=107(LC 11)
Max Uplift1=-93(LC 12), 4=-110(LC 12)
Max Grav 1=911(LC 18), 4=746(LC 18)

FORCES. (lb) - Max. Comp./Max. Ten. - All forces 250 (lb) or less except when shown.
TOP CHORD 1-2=-491/183

NOTES- (12-15)
1) 2-ply truss to be connected together with 10d (0.131"x3") nails as follows:
Top chords connected as follows: 2x4 - 1 row at 0-9-0 oc.
Bottom chords connected as follows: 2x6 - 2 rows staggered at 0-9-0 oc.
2) All loads are considered equally applied to all plies, except if noted as front (F) or back (B) face in the LOAD CASE(S) section. Ply to ply connections have been provided to distribute only loads noted as (F) or (B), unless otherwise indicated.
3) Wind: ASCE 7-16; Vult=120mph (3-second gust) Vasd=95mph; TCDL=5.0psf; BCDL=5.0psf; h=35ft; Cat. II; Exp B; Enclosed; MWFRS (envelope) gable end zone; cantilever left and right exposed ; end vertical left and right exposed; Lumber DOL=1.60 plate grip DOL=1.60
4) TCLL: ASCE 7-16; Pr=20.0 psf (roof LL: Lum DOL=1.15 Plate DOL=1.15); Pf=20.0 psf (Lum DOL=1.15 Plate DOL=1.15); Is=1.0; Rough Cat B; Partially Exp.; Ce=1.0; Cs=1.00; Ct=1.10
5) Unbalanced snow loads have been considered for this design.
6) This truss has been designed for a 10.0 psf bottom chord live load nonconcurrent with any other live loads.
7) * This truss has been designed for a live load of 30.0psf on the bottom chord in all areas where a rectangle 3-6-0 tall by 1-0-0 wide will fit between the bottom chord and any other members.
8) Refer to girder(s) for truss to truss connections.
9) Provide mechanical connection (by others) of truss to bearing plate capable of withstanding 100 lb uplift at joint(s) 1 except (jt=lb) 4=110.
10) Use Simpson Strong-Tie HTU26 (20-10d Girder, 11-10dx1 1/2 Truss, Single Ply Girder) or equivalent spaced at 2-0-0 oc max. starting at 1-0-12 from the left end to 3-0-12 to connect truss(es) R12 (1 ply 2x4 SP) to front face of bottom chord.
11) Fill all nail holes where hanger is in contact with lumber.
12) Graphical bracing representation does not depict the size, type or the orientation of the brace on the member. Symbol only indicates that the member must be braced.
13) Bearing symbols are only graphical representations of a possible bearing condition. Bearing symbols are not considered in the structural design of the truss to support the loads indicated.
14) Web bracing shown is for lateral support of individual web members only. Refer to BCSI - Guide to Good Practice for Handling, Installing, Restraining & Bracing of Metal Plate Connected Wood Trusses for additional bracing guidelines, including diagonal bracing.
15) SEE BCSI-B3 SUMMARY SHEET- PERMANENT RESTRAING/BRACING OF CHORDS & WEB MEMBERS FOR RECOMMENDED MINIMUM BRACING REQUIREMENTS OF TOP CHORD, BOTTOM CHORD, AND WEB PLANES. IN ADDITION TO THESE MINIMUM GUIDELINES, ALWAYS CONSULT THE PROJECT ARCHITECT OR ENGINEER FOR ADDITIONAL BRACING CONSIDERATIONS.

NORTH CAROLINA PROFESSIONAL SEAL 28147 ENGINEER MARK K. MORRIS

1/10/2024

Continued on page 2

LOAD CASE(S) Standard
1) Dead + Snow (balanced): Lumber Increase=1.15, Plate Increase=1.15
   Uniform Loads (plf)
      Vert: 1-3=-60, 4-5=-20
   Concentrated Loads (lb)
      Vert: 9=-549(F) 10=-549(F)

1/10/2024

Job	Truss	Truss Type	Qty	Ply	LOT 47 PROVIDENCE CREEK | 239 WINDSWEPT WAY FUQUAY-VARINA, NC
24-0180-R01	J06	Jack-Open	6	1	Job Reference (optional) **# 44079**

Run: 8.430 s Feb 12 2021 Print: 8.430 s Feb 12 2021 MiTek Industries, Inc. Fri Jan 12 17:58:11 2024 Page 1
ID:P9Fbno1x1NcL_1BS5_FittyrTtl-r8ZfP?bOAGGwbMkJM6wexMJ2Zy9mJlHZc9NAMQzw1Iw

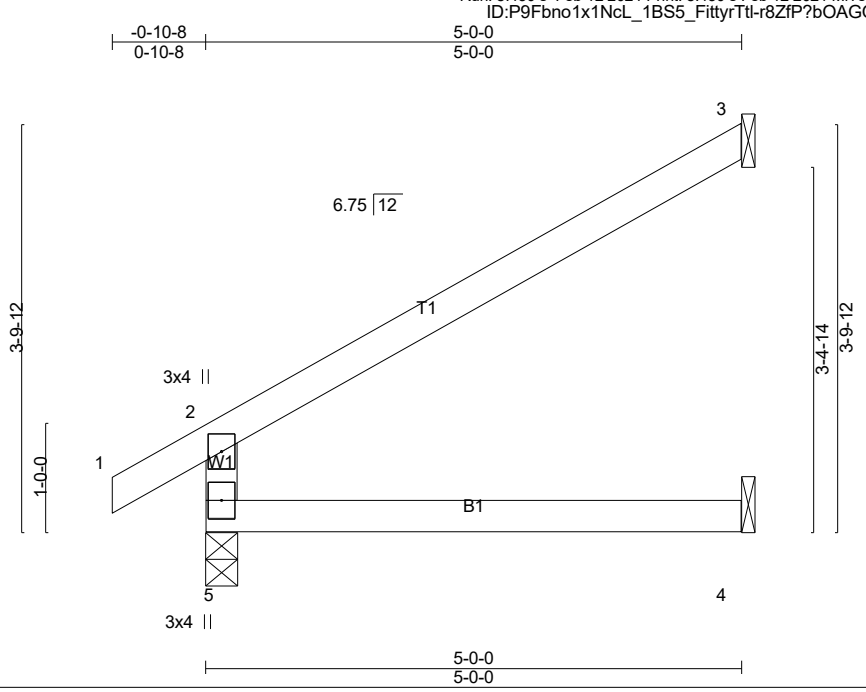

LOADING (psf)		SPACING- 2-0-0		CSI.		DEFL.	in	(loc)	l/defl	L/d	PLATES	GRIP
TCLL (roof)	20.0	Plate Grip DOL	1.15	TC	0.52	Vert(LL)	-0.03	4-5	>999	240	MT20	244/190
Snow (Pf)	20.0	Lumber DOL	1.15	BC	0.26	Vert(CT)	-0.05	4-5	>999	180		
TCDL	10.0	Rep Stress Incr	YES	WB	0.00	Horz(CT)	0.04	3	n/a	n/a		
BCLL	0.0 *	Code IRC2021/TPI2014		Matrix-AS							Weight: 18 lb	FT = 20%
BCDL	10.0											

LUMBER-
TOP CHORD 2x4 SP No.2
BOT CHORD 2x4 SP No.2
WEBS 2x4 SP No.3

BRACING-
TOP CHORD Structural wood sheathing directly applied, except end verticals.
BOT CHORD Rigid ceiling directly applied.

MiTek recommends that Stabilizers and required cross bracing be installed during truss erection, in accordance with Stabilizer Installation guide.

REACTIONS. (lb/size) 5=259/0-3-8 (min. 0-1-8), 3=131/Mechanical, 4=54/Mechanical
Max Horz 5=101(LC 14)
Max Uplift5=-15(LC 14), 3=-81(LC 14)
Max Grav 5=344(LC 21), 3=207(LC 21), 4=90(LC 7)

FORCES. (lb) - Max. Comp./Max. Ten. - All forces 250 (lb) or less except when shown.
TOP CHORD 2-5=-311/103

NOTES- (10-13)
1) Wind: ASCE 7-16; Vult=120mph (3-second gust) Vasd=95mph; TCDL=5.0psf; BCDL=5.0psf; h=35ft; Cat. II; Exp B; Enclosed; MWFRS (envelope) gable end zone and C-C Exterior(2E) zone; cantilever left and right exposed ; end vertical left and right exposed;C-C for members and forces & MWFRS for reactions shown; Lumber DOL=1.60 plate grip DOL=1.60
2) TCLL: ASCE 7-16; Pr=20.0 psf (roof LL: Lum DOL=1.15 Plate DOL=1.15); Pf=20.0 psf (Lum DOL=1.15 Plate DOL=1.15); Is=1.0; Rough Cat B; Partially Exp.; Ce=1.0; Cs=1.00; Ct=1.10
3) Unbalanced snow loads have been considered for this design.
4) This truss has been designed for greater of min roof live load of 12.0 psf or 2.00 times flat roof load of 20.0 psf on overhangs non-concurrent with other live loads.
5) This truss has been designed for a 10.0 psf bottom chord live load nonconcurrent with any other live loads.
6) * This truss has been designed for a live load of 30.0psf on the bottom chord in all areas where a rectangle 3-6-0 tall by 1-0-0 wide will fit between the bottom chord and any other members.
7) Refer to girder(s) for truss to truss connections.
8) Provide mechanical connection (by others) of truss to bearing plate capable of withstanding 100 lb uplift at joint(s) 5, 3.
9) This truss design requires that a minimum of 7/16" structural wood sheathing be applied directly to the top chord and 1/2" gypsum sheetrock be applied directly to the bottom chord.
10) Graphical bracing representation does not depict the size, type or the orientation of the brace on the member. Symbol only indicates that the member must be braced.
11) Bearing symbols are only graphical representations of a possible bearing condition. Bearing symbols are not considered in the structural design of the truss to support the loads indicated.
12) Web bracing shown is for lateral support of individual web members only. Refer to BCSI - Guide to Good Practice for Handling, Installing, Restraining & Bracing of Metal Plate Connected Wood Trusses for additional bracing guidelines, including diagonal bracing.
13) SEE BCSI-B3 SUMMARY SHEET- PERMANENT RESTRAING/BRACING OF CHORDS & WEB MEMBERS FOR RECOMMENDED MINIMUM BRACING REQUIREMENTS OF TOP CHORD, BOTTOM CHORD, AND WEB PLANES. IN ADDITION TO THESE MINIMUM GUIDELINES, ALWAYS CONSULT THE PROJECT ARCHITECT OR ENGINEER FOR ADDITIONAL BRACING CONSIDERATIONS.

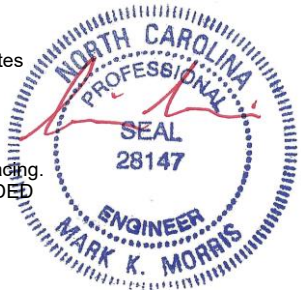

LOAD CASE(S) Standard

1/10/2024

Job	Truss	Truss Type	Qty	Ply	LOT 47 PROVIDENCE CREEK | 239 WINDSWEPT WAY FUQUAY-VARINA, NC
24-0180-R01	R01	Common Supported Gable	1	1	Job Reference (optional) **# 44079**

Run: 8.430 s Feb 12 2021 Print: 8.430 s Feb 12 2021 MiTek Industries, Inc. Fri Jan 12 17:58:14 2024 Page 1
ID:P9Fbno1x1NcL_1BS5_FittyrTtl-FjFn21dHTBeVSpTu2FULZ?xfvAD7W3c?I7cqzlzw1lt

-0-10-8 | 19-0-0 | 38-0-0 | 38-10-8
0-10-8 | 19-0-0 | 19-0-0 | 0-10-8

Scale = 1:73.1

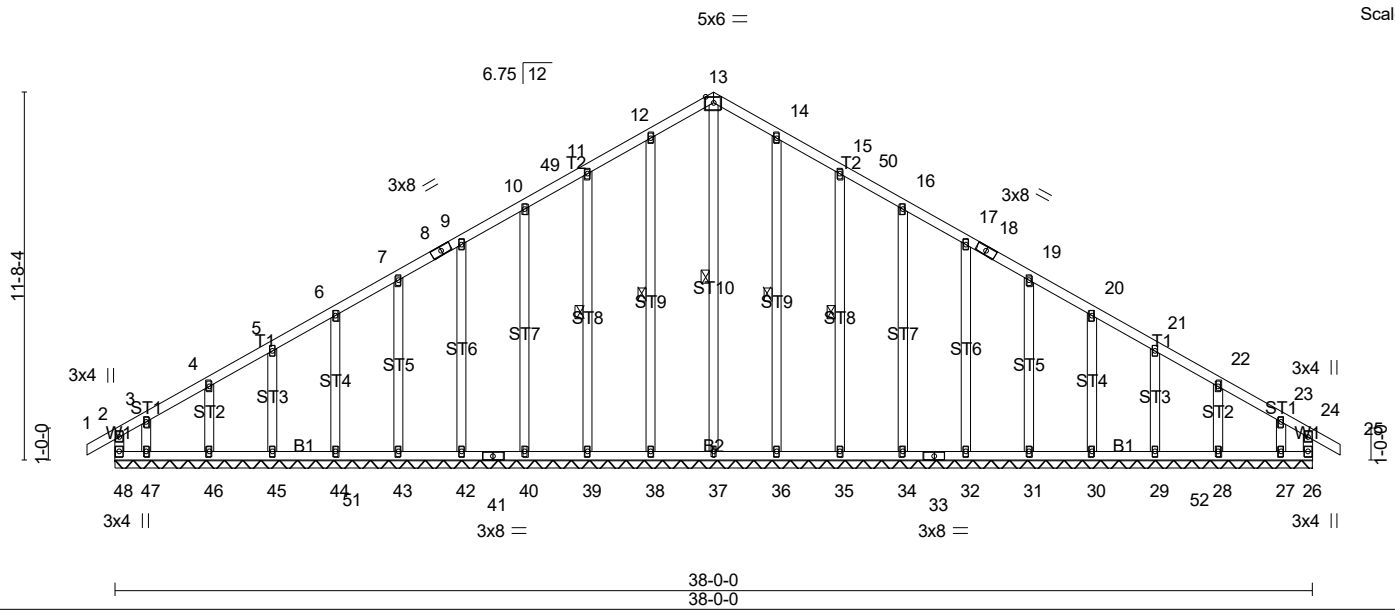

LOADING (psf)		SPACING- 2-0-0	CSI.	DEFL. in (loc) l/defl L/d	PLATES GRIP
TCLL (roof)	20.0	Plate Grip DOL 1.15	TC 0.19	Vert(LL) -0.00 25 n/r 180	MT20 244/190
Snow (Pf)	20.0	Lumber DOL 1.15	BC 0.16	Vert(CT) -0.00 25 n/r 80	
TCDL	10.0	Rep Stress Incr YES	WB 0.15	Horz(CT) 0.01 26 n/a n/a	
BCLL	0.0 *	Code IRC2021/TPI2014	Matrix-R		Weight: 291 lb FT = 20%
BCDL	10.0				

LUMBER-
TOP CHORD 2x4 SP No.2
BOT CHORD 2x4 SP No.3
WEBS 2x4 SP No.3
OTHERS 2x4 SP No.3

BRACING-
TOP CHORD Structural wood sheathing directly applied or 6-0-0 oc purlins, except end verticals.
BOT CHORD Rigid ceiling directly applied or 6-0-0 oc bracing.
WEBS 1 Row at midpt 13-37, 12-38, 11-39, 14-36, 15-35

MiTek recommends that Stabilizers and required cross bracing be installed during truss erection, in accordance with Stabilizer Installation guide.

REACTIONS. All bearings 38-0-0.
(lb) - Max Horz 48=-247(LC 12)
Max Uplift All uplift 100 lb or less at joint(s) 26, 38, 39, 40, 42, 43, 44, 45, 46, 36, 35, 34, 32, 31, 30, 29, 28 except 48=-179(LC 10), 47=-203(LC 14), 27=-167(LC 15)
Max Grav All reactions 250 lb or less at joint(s) 48, 26, 40, 42, 43, 45, 46, 47, 34, 32, 31, 29, 28, 27 except 37=314(LC 27), 38=294(LC 5), 39=274(LC 5), 44=252(LC 24), 36=294(LC 6), 35=274(LC 6), 30=252(LC 25)

FORCES. (lb) - Max. Comp./Max. Ten. - All forces 250 (lb) or less except when shown.
TOP CHORD 11-12=-159/271, 12-13=-180/306, 13-14=-180/306, 14-15=-159/271

NOTES- (14-17)
1) Unbalanced roof live loads have been considered for this design.
2) Wind: ASCE 7-16; Vult=120mph (3-second gust) Vasd=95mph; TCDL=5.0psf; BCDL=5.0psf; h=35ft; Cat. II; Exp B; Enclosed; MWFRS (envelope) gable end zone and C-C Corner(3E) -0-10-8 to 3-11-2, Exterior(2N) 3-11-2 to 14-2-6, Corner(3R) 14-2-6 to 23-9-10, Exterior(2N) 23-9-10 to 34-0-14, Corner(3E) 34-0-14 to 38-10-8 zone; cantilever left and right exposed ; end vertical left and right exposed;C-C for members and forces & MWFRS for reactions shown; Lumber DOL=1.60 plate grip DOL=1.60
3) Truss designed for wind loads in the plane of the truss only. For studs exposed to wind (normal to the face), see Standard Industry Gable End Details as applicable, or consult qualified building designer as per ANSI/TPI 1.
4) TCLL: ASCE 7-16; Pr=20.0 psf (roof LL: Lum DOL=1.15 Plate DOL=1.15); Pf=20.0 psf (Lum DOL=1.15 Plate DOL=1.15); Is=1.0; Rough Cat B; Partially Exp.; Ce=1.0; Cs=1.00; Ct=1.10
5) Unbalanced snow loads have been considered for this design.
6) This truss has been designed for greater of min roof live load of 12.0 psf or 2.00 times flat roof load of 20.0 psf on overhangs non-concurrent with other live loads.
7) All plates are 2x4 MT20 unless otherwise indicated.
8) Gable requires continuous bottom chord bearing.
9) Truss to be fully sheathed from one face or securely braced against lateral movement (i.e. diagonal web).
10) Gable studs spaced at 2-0-0 oc.
11) This truss has been designed for a 10.0 psf bottom chord live load nonconcurrent with any other live loads.
12) * This truss has been designed for a live load of 30.0psf on the bottom chord in all areas where a rectangle 3-6-0 tall by 1-0-0 wide will fit between the bottom chord and any other members, with BCDL = 10.0psf.
13) Provide mechanical connection (by others) of truss to bearing plate capable of withstanding 100 lb uplift at joint(s) 26, 38, 39, 40, 42, 43, 44, 45, 46, 36, 35, 34, 32, 31, 30, 29, 28 except (jt=lb) 48=179, 47=203, 27=167.

NORTH CAROLINA PROFESSIONAL SEAL 28147 ENGINEER MARK K. MORRIS

1/10/2024

Continued on page 2

14) Graphical bracing representation does not depict the size, type or the orientation of the brace on the member. Symbol only indicates that the member must be braced.
15) Bearing symbols are only graphical representations of a possible bearing condition. Bearing symbols are not considered in the structural design of the truss to support the loads indicated.
16) Web bracing shown is for lateral support of individual web members only. Refer to BCSI - Guide to Good Practice for Handling, Installing, Restraining & Bracing of Metal Plate Connected Wood Trusses for additional bracing guidelines, including diagonal bracing.
17) SEE BCSI-B3 SUMMARY SHEET- PERMANENT RESTRAING/BRACING OF CHORDS & WEB MEMBERS FOR RECOMMENDED MINIMUM BRACING REQUIREMENTS OF TOP CHORD, BOTTOM CHORD, AND WEB PLANES. IN ADDITION TO THESE MINIMUM GUIDELINES, ALWAYS CONSULT THE PROJECT ARCHITECT OR ENGINEER FOR ADDITIONAL BRACING CONSIDERATIONS.

LOAD CASE(S) Standard

1/10/2024

Job	Truss	Truss Type	Qty	Ply	LOT 47 PROVIDENCE CREEK | 239 WINDSWEPT WAY FUQUAY-VARINA, NC
24-0180-R01	R02	Common	6	1	Job Reference (optional) **# 44079**

Run: 8.430 s Feb 12 2021 Print: 8.430 s Feb 12 2021 MiTek Industries, Inc. Fri Jan 12 17:58:17 2024 Page 1
ID:P9Fbno1x1NcL_1BS5_FittyrTtl-glxwg3g9m603JHBTjN12AdZ1TN14jJ5S_5qUa4zw1lq

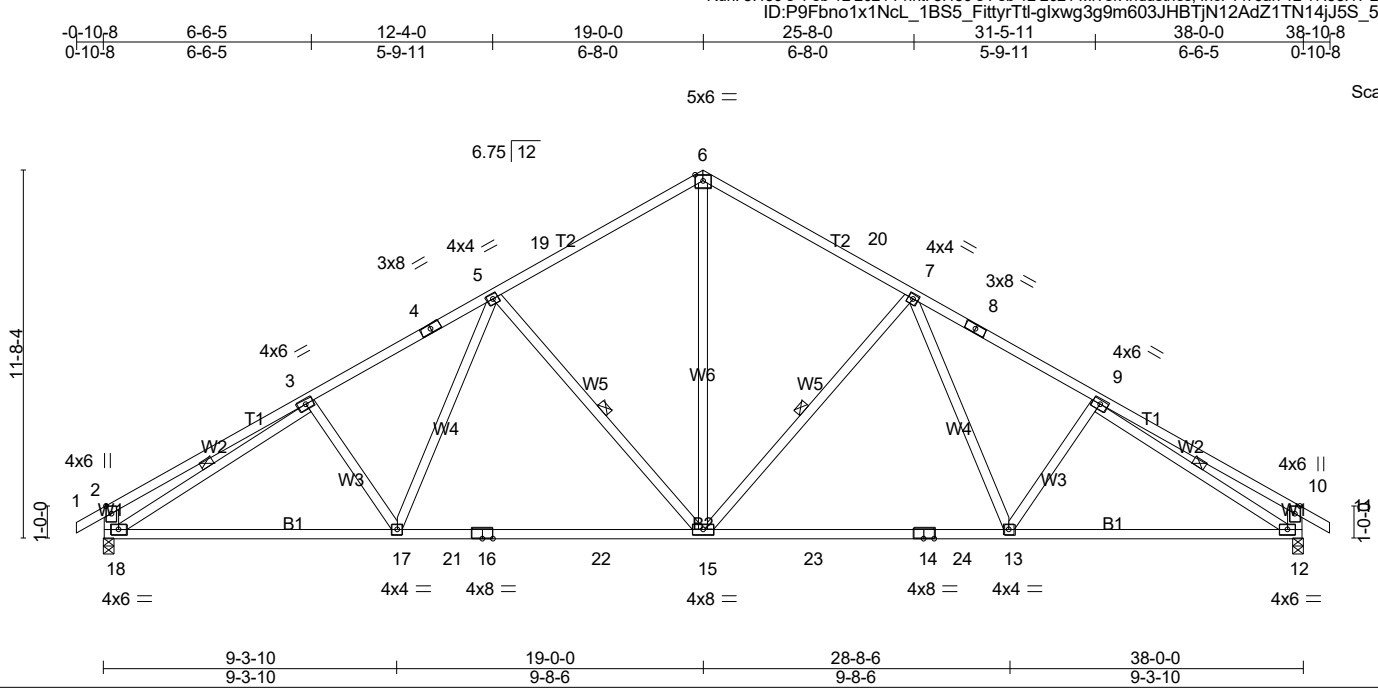

LOADING (psf)		**SPACING-** 2-0-0	**CSI.**	**DEFL.** in (loc) l/defl L/d	**PLATES**	**GRIP**
TCLL (roof)	20.0	Plate Grip DOL 1.15	TC 0.68	Vert(LL) -0.39 13-15 >999 240	MT20	244/190
Snow (Pf)	20.0	Lumber DOL 1.15	BC 0.97	Vert(CT) -0.59 13-15 >763 180		
TCDL	10.0	Rep Stress Incr YES	WB 0.62	Horz(CT) 0.11 12 n/a n/a		
BCLL	0.0 *	Code IRC2021/TPI2014	Matrix-AS		Weight: 233 lb	FT = 20%
BCDL	10.0					

LUMBER-
TOP CHORD 2x4 SP No.2
BOT CHORD 2x4 SP No.2 *Except*
B2: 2x4 SP No.1
WEBS 2x4 SP No.3 *Except*
W1: 2x6 SP No.2

BRACING-
TOP CHORD Structural wood sheathing directly applied, except end verticals.
BOT CHORD Rigid ceiling directly applied.
WEBS 1 Row at midpt 7-15, 5-15, 3-18, 9-12

MiTek recommends that Stabilizers and required cross bracing be installed during truss erection, in accordance with Stabilizer Installation guide.

REACTIONS. (lb/size) 18=1568/0-3-8 (min. 0-1-15), 12=1568/0-3-8 (min. 0-1-15)
Max Horz 18=-249(LC 12)
Max Uplift18=-197(LC 14), 12=-197(LC 15)
Max Grav 18=1631(LC 24), 12=1631(LC 25)

FORCES. (lb) - Max. Comp./Max. Ten. - All forces 250 (lb) or less except when shown.
TOP CHORD 2-3=-612/167, 3-4=-2262/278, 4-5=-2130/304, 5-19=-1676/279, 6-19=-1595/308, 6-20=-1595/308, 7-20=-1676/279, 7-8=-2130/304, 8-9=-2262/278, 9-10=-612/167, 2-18=-527/173, 10-12=-527/173
BOT CHORD 17-18=-301/2105, 17-21=-189/1884, 16-21=-189/1884, 16-22=-189/1884, 15-22=-189/1884, 15-23=-69/1763, 14-23=-69/1763, 14-24=-69/1763, 13-24=-69/1763, 12-13=-158/1919
WEBS 6-15=-142/1228, 7-15=-637/241, 7-13=-46/433, 5-15=-637/241, 5-17=-46/433, 3-18=-1877/155, 9-12=-1877/155

NOTES- (10-13)
1) Unbalanced roof live loads have been considered for this design.
2) Wind: ASCE 7-16; Vult=120mph (3-second gust) Vasd=95mph; TCDL=5.0psf; BCDL=5.0psf; h=35ft; Cat. II; Exp B; Enclosed; MWFRS (envelope) gable end zone and C-C Exterior(2E) -0-10-8 to 3-11-2, Interior(1) 3-11-2 to 14-2-6, Exterior(2R) 14-2-6 to 23-9-10, Interior(1) 23-9-10 to 34-0-14, Exterior(2E) 34-0-14 to 38-10-8 zone; cantilever left and right exposed ; end vertical left and right exposed;C-C for members and forces & MWFRS for reactions shown; Lumber DOL=1.60 plate grip DOL=1.60
3) TCLL: ASCE 7-16; Pr=20.0 psf (roof LL: Lum DOL=1.15 Plate DOL=1.15); Pf=20.0 psf (Lum DOL=1.15 Plate DOL=1.15); Is=1.0; Rough Cat B; Partially Exp.; Ce=1.0; Cs=1.00; Ct=1.10
4) Unbalanced snow loads have been considered for this design.
5) This truss has been designed for greater of min roof live load of 12.0 psf or 2.00 times flat roof load of 20.0 psf on overhangs non-concurrent with other live loads.
6) This truss has been designed for a 10.0 psf bottom chord live load nonconcurrent with any other live loads.
7) * This truss has been designed for a live load of 30.0psf on the bottom chord in all areas where a rectangle 3-6-0 tall by 1-0-0 wide will fit between the bottom chord and any other members, with BCDL = 10.0psf.
8) Provide mechanical connection (by others) of truss to bearing plate capable of withstanding 100 lb uplift at joint(s) except (jt=lb) 18=197, 12=197.
9) This truss design requires that a minimum of 7/16" structural wood sheathing be applied directly to the top chord and 1/2" gypsum sheetrock be applied directly to the bottom chord.

NORTH CAROLINA PROFESSIONAL SEAL 28147 ENGINEER MARK K. MORRIS

1/10/2024

Continued on page 2

10) Graphical bracing representation does not depict the size, type or the orientation of the brace on the member. Symbol only indicates that the member must be braced.
11) Bearing symbols are only graphical representations of a possible bearing condition. Bearing symbols are not considered in the structural design of the truss to support the loads indicated.
12) Web bracing shown is for lateral support of individual web members only. Refer to BCSI - Guide to Good Practice for Handling, Installing, Restraining & Bracing of Metal Plate Connected Wood Trusses for additional bracing guidelines, including diagonal bracing.
13) SEE BCSI-B3 SUMMARY SHEET- PERMANENT RESTRAING/BRACING OF CHORDS & WEB MEMBERS FOR RECOMMENDED MINIMUM BRACING REQUIREMENTS OF TOP CHORD, BOTTOM CHORD, AND WEB PLANES. IN ADDITION TO THESE MINIMUM GUIDELINES, ALWAYS CONSULT THE PROJECT ARCHITECT OR ENGINEER FOR ADDITIONAL BRACING CONSIDERATIONS.

LOAD CASE(S) Standard

1/10/2024

Job	Truss	Truss Type	Qty	Ply	LOT 47 PROVIDENCE CREEK | 239 WINDSWEPT WAY FUQUAY-VARINA, NC
24-0180-R01	R02A	Common	4	1	Job Reference (optional) **# 44079**

Run: 8.430 s Feb 12 2021 Print: 8.430 s Feb 12 2021 MiTek Industries, Inc. Fri Jan 12 17:58:19 2024 Page 1
ID:P9Fbno1x1NcL_1BS5_FittyrTtl-ch2g5khQljGnYaLrqo3WG2eIaBjjBEhkSPJbfyzw1lo

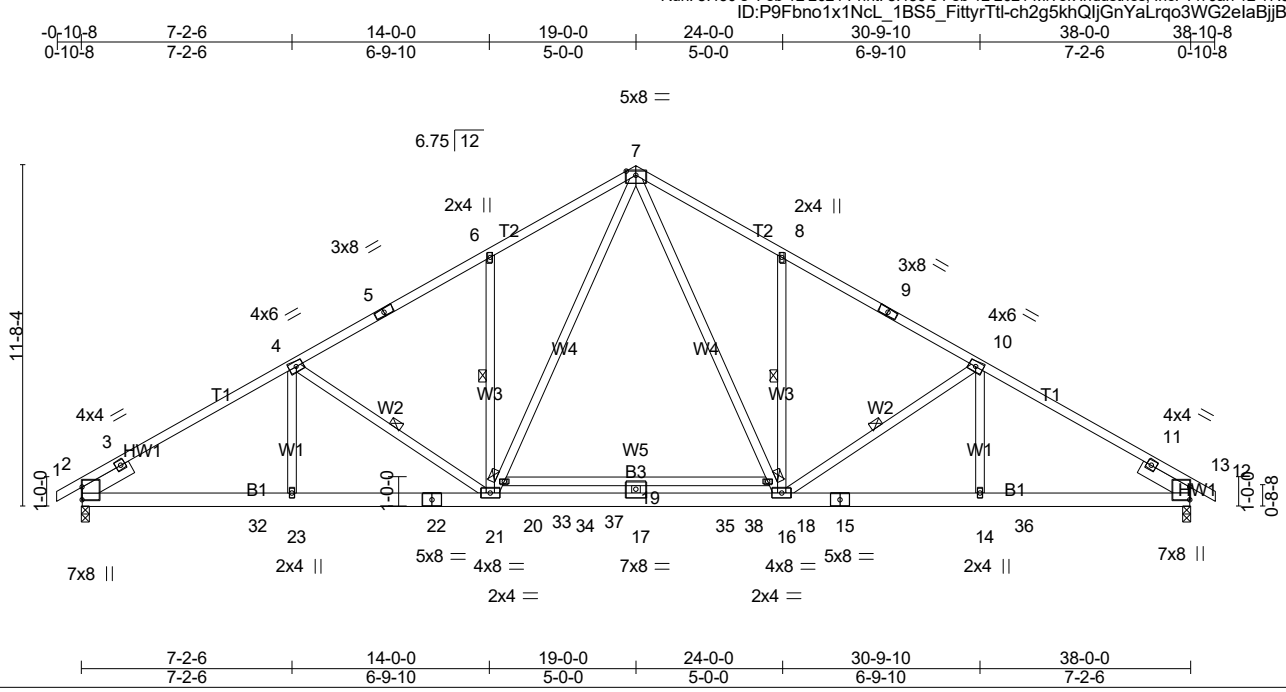

LOADING (psf)		**SPACING-** 2-0-0	**CSI.**	**DEFL.** in (loc) l/defl L/d	**PLATES**	**GRIP**
TCLL (roof)	20.0	Plate Grip DOL 1.15	TC 0.96	Vert(LL) -0.35 19 >999 240	MT20	244/190
Snow (Pf)	20.0	Lumber DOL 1.15	BC 0.96	Vert(CT) -0.57 19 >794 180		
TCDL	10.0	Rep Stress Incr YES	WB 0.55	Horz(CT) 0.09 12 n/a n/a		
BCLL	0.0 *	Code IRC2021/TPI2014	Matrix-AS		Weight: 276 lb	FT = 20%
BCDL	10.0					

LUMBER-
TOP CHORD 2x4 SP No.2
BOT CHORD 2x6 SP No.2 *Except*
B3: 2x4 SP No.2, B2: 2x6 SP No.1
WEBS 2x4 SP No.3
SLIDER Left 2x6 SP No.2 -Ø 1-11-0, Right 2x6 SP No.2 -Ø 1-11-0

BRACING-
TOP CHORD Structural wood sheathing directly applied.
BOT CHORD Rigid ceiling directly applied.
WEBS 1 Row at midpt 8-16, 10-16, 6-21, 4-21

MiTek recommends that Stabilizers and required cross bracing be installed during truss erection, in accordance with Stabilizer Installation guide.

REACTIONS. (lb/size) 2=1666/0-3-8 (min. 0-2-3), 12=1666/0-3-8 (min. 0-2-3)
Max Horz 2=223(LC 13)
Max Uplift2=-149(LC 14), 12=-149(LC 15)
Max Grav 2=1838(LC 24), 12=1838(LC 25)

FORCES. (lb) - Max. Comp./Max. Ten. - All forces 250 (lb) or less except when shown.
TOP CHORD 2-3=-952/0, 3-4=-2726/207, 4-5=-2507/189, 5-6=-2428/206, 6-7=-2531/317, 7-8=-2531/317, 8-9=-2428/206, 9-10=-2507/189, 10-11=-2727/207, 11-12=-952/0
BOT CHORD 2-32=-244/2449, 23-32=-244/2449, 22-23=-244/2449, 21-22=-244/2449, 21-33=0/1665, 33-34=0/1665, 17-34=0/1665, 17-35=0/1665, 16-35=0/1665, 15-16=-84/2282, 14-15=-84/2282, 14-36=-84/2282, 12-36=-84/2282
WEBS 7-18=-203/1289, 16-18=-230/1230, 8-16=-489/220, 10-16=-345/205, 20-21=-231/1231, 7-20=-203/1289, 6-21=-489/220, 4-21=-345/204, 17-19=-321/0

NOTES- (10-13)
1) Unbalanced roof live loads have been considered for this design.
2) Wind: ASCE 7-16; Vult=120mph (3-second gust) Vasd=95mph; TCDL=5.0psf; BCDL=5.0psf; h=35ft; Cat. II; Exp B; Enclosed; MWFRS (envelope) gable end zone and C-C Exterior(2E) -0-10-8 to 3-11-2, Interior(1) 3-11-2 to 14-0-0, Exterior(2R) 14-0-0 to 24-0-0, Interior(1) 24-0-0 to 34-0-14, Exterior(2E) 34-0-14 to 38-10-8 zone; cantilever left and right exposed ; end vertical left and right exposed;C-C for members and forces & MWFRS for reactions shown; Lumber DOL=1.60 plate grip DOL=1.60
3) TCLL: ASCE 7-16; Pr=20.0 psf (roof LL: Lum DOL=1.15 Plate DOL=1.15); Pf=20.0 psf (Lum DOL=1.15 Plate DOL=1.15); Is=1.0; Rough Cat B; Partially Exp.; Ce=1.0; Cs=1.00; Ct=1.10
4) Unbalanced snow loads have been considered for this design.
5) This truss has been designed for greater of min roof live load of 12.0 psf or 2.00 times flat roof load of 20.0 psf on overhangs non-concurrent with other live loads.
6) This truss has been designed for a 10.0 psf bottom chord live load nonconcurrent with any other live loads.
7) * This truss has been designed for a live load of 30.0psf on the bottom chord in all areas where a rectangle 3-6-0 tall by 1-0-0 wide will fit between the bottom chord and any other members, with BCDL = 10.0psf.
8) Provide mechanical connection (by others) of truss to bearing plate capable of withstanding 100 lb uplift at joint(s) except (jt=lb) 2=149, 12=149.
9) This truss design requires that a minimum of 7/16" structural wood sheathing be applied directly to the top chord and 1/2" gypsum sheetrock be applied directly to the bottom chord.

NORTH CAROLINA PROFESSIONAL SEAL 28147 ENGINEER MARK K. MORRIS

1/10/2024

Continued on page 2

10) Graphical bracing representation does not depict the size, type or the orientation of the brace on the member. Symbol only indicates that the member must be braced.
11) Bearing symbols are only graphical representations of a possible bearing condition. Bearing symbols are not considered in the structural design of the truss to support the loads indicated.
12) Web bracing shown is for lateral support of individual web members only. Refer to BCSI - Guide to Good Practice for Handling, Installing, Restraining & Bracing of Metal Plate Connected Wood Trusses for additional bracing guidelines, including diagonal bracing.
13) SEE BCSI-B3 SUMMARY SHEET- PERMANENT RESTRAING/BRACING OF CHORDS & WEB MEMBERS FOR RECOMMENDED MINIMUM BRACING REQUIREMENTS OF TOP CHORD, BOTTOM CHORD, AND WEB PLANES. IN ADDITION TO THESE MINIMUM GUIDELINES, ALWAYS CONSULT THE PROJECT ARCHITECT OR ENGINEER FOR ADDITIONAL BRACING CONSIDERATIONS.

LOAD CASE(S) Standard

1/10/2024

Job	Truss	Truss Type	Qty	Ply	LOT 47 PROVIDENCE CREEK | 239 WINDSWEPT WAY FUQUAY-VARINA, NC
24-0180-R01	R03	Hip	1	1	Job Reference (optional) **# 44079**

Run: 8.430 s Feb 12 2021 Print: 8.430 s Feb 12 2021 MiTek Industries, Inc. Fri Jan 12 17:58:23 2024 Page 1
ID:P9Fbno1x1NcL_1BS5_FittyrTtl-USIBw6kwLymD1Cfc3e8TQup?Ho5t?BKN0Hookzw1lk

-0-10-8	5-10-5	11-3-11	17-0-0	21-0-0	26-8-5	32-1-11	38-0-0	38-10-8
0-10-8	5-10-5	5-5-6	5-8-5	4-0-0	5-8-5	5-5-6	5-10-5	0-10-8

Scale = 1:76.4

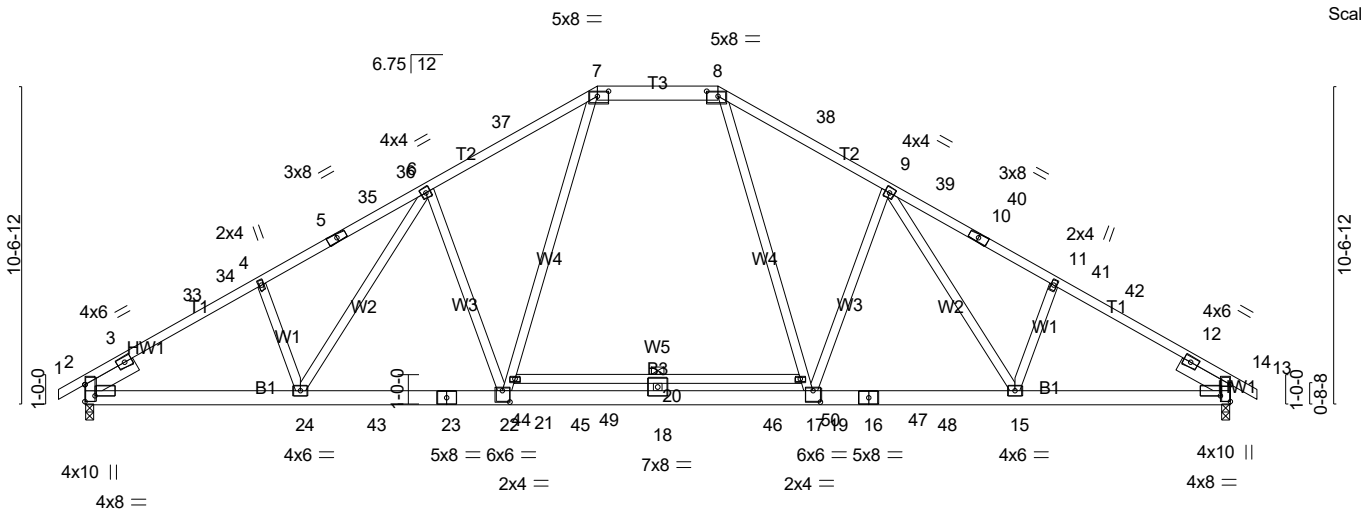

7-1-12	14-0-0	19-0-0	24-0-0	30-10-4	38-0-0
7-1-12	6-10-4	5-0-0	5-0-0	6-10-4	7-1-12

Plate Offsets (X,Y)-- [2:0-4-0,0-4-8], [7:0-4-8,0-2-0], [8:0-4-8,0-2-0], [13:0-4-0,0-4-8], [17:0-3-0,0-4-8], [22:0-3-0,0-4-8]

LOADING (psf)		**SPACING-** 2-0-0	**CSI.**	**DEFL.** in (loc) l/defl L/d	**PLATES**	**GRIP**
TCLL (roof)	20.0	Plate Grip DOL 1.15	TC 0.92	Vert(LL) -0.41 20 >999 240	MT20	244/190
Snow (Pf)	20.0	Lumber DOL 1.15	BC 0.95	Vert(CT) -0.62 20 >736 180		
TCDL	10.0	Rep Stress Incr YES	WB 0.71	Horz(CT) 0.10 13 n/a n/a		
BCLL	0.0 *	Code IRC2021/TPI2014	Matrix-AS		Weight: 269 lb	FT = 20%
BCDL	10.0					

LUMBER-
TOP CHORD 2x4 SP No.2 *Except*
T3: 2x6 SP No.2, T1: 2x4 SP No.1
BOT CHORD 2x6 SP DSS *Except*
B3: 2x4 SP No.2, B2: 2x6 SP No.1
WEBS 2x4 SP No.3
SLIDER Left 2x6 SP No.2 -Ø 1-11-0, Right 2x6 SP No.2 -Ø 1-11-0

BRACING-
TOP CHORD Structural wood sheathing directly applied.
BOT CHORD Rigid ceiling directly applied. Except:
6-0-0 oc bracing: 19-21

MiTek recommends that Stabilizers and required cross bracing be installed during truss erection, in accordance with Stabilizer Installation guide.

REACTIONS. (lb/size) 2=1670/0-3-8 (min. 0-2-5), 13=1670/0-3-8 (min. 0-2-5)
Max Horz 2=200(LC 13)
Max Uplift2=-136(LC 14), 13=-136(LC 15)
Max Grav 2=2300(LC 47), 13=2300(LC 49)

FORCES. (lb) - Max. Comp./Max. Ten. - All forces 250 (lb) or less except when shown.
TOP CHORD 2-3=-1334/0, 3-33=-3534/182, 33-34=-3471/185, 4-34=-3443/194, 4-5=-3433/234, 5-35=-3352/234, 35-36=-3296/243, 6-36=-3251/249, 6-37=-3300/206, 7-37=-3172/220, 7-8=-2376/231, 8-38=-3172/220, 9-38=-3300/206, 9-39=-3252/249, 39-40=-3296/244, 10-40=-3352/235, 10-11=-3433/234, 11-41=-3443/194, 41-42=-3471/185, 12-42=-3534/182, 12-13=-1334/0
BOT CHORD 2-24=-229/3128, 24-43=-98/3006, 23-43=-98/3006, 23-44=-98/3006, 22-44=-98/3006, 22-45=0/2403, 18-45=0/2403, 18-46=0/2403, 17-46=0/2403, 17-47=-11/2928, 16-47=-11/2928, 16-48=-11/2928, 15-48=-11/2928, 13-15=-80/2991
WEBS 4-24=-293/154, 6-22=-673/293, 21-22=-102/1311, 7-21=-77/1416, 8-19=-77/1416, 17-19=-101/1310, 9-17=-673/293, 11-15=-293/154, 18-20=-381/0

NOTES- (11-14)
1) Unbalanced roof live loads have been considered for this design.
2) Wind: ASCE 7-16; Vult=120mph (3-second gust) Vasd=95mph; TCDL=5.0psf; BCDL=5.0psf; h=35ft; Cat. II; Exp B; Enclosed; MWFRS (envelope) gable end zone and C-C Exterior(2E) -0-10-8 to 3-11-2, Interior(1) 3-11-2 to 10-2-9, Exterior(2R) 10-2-9 to 27-9-7, Interior(1) 27-9-7 to 34-0-14, Exterior(2E) 34-0-14 to 38-10-8 zone; cantilever left and right exposed ; end vertical left and right exposed;C-C for members and forces & MWFRS for reactions shown; Lumber DOL=1.60 plate grip DOL=1.60
3) TCLL: ASCE 7-16; Pr=20.0 psf (roof LL: Lum DOL=1.15 Plate DOL=1.15); Pf=20.0 psf (Lum DOL=1.15 Plate DOL=1.15); Is=1.0; Rough Cat B; Partially Exp.; Ce=1.0; Cs=1.00; Ct=1.10
4) Unbalanced snow loads have been considered for this design.
5) This truss has been designed for greater of min roof live load of 12.0 psf or 2.00 times flat roof load of 20.0 psf on overhangs non-concurrent with other live loads.
6) Provide adequate drainage to prevent water ponding.
7) This truss has been designed for a 10.0 psf bottom chord live load nonconcurrent with any other live loads.
8) * This truss has been designed for a live load of 30.0psf on the bottom chord in all areas where a rectangle 3-6-0 tall by 1-0-0 wide will fit between the bottom chord and any other members, with BCDL = 10.0psf.
9) Provide mechanical connection (by others) of truss to bearing plate capable of withstanding 100 lb uplift at joint(s) except (jt=lb) 2=136, 13=136.

NORTH CAROLINA PROFESSIONAL SEAL 28147 ENGINEER MARK K. MORRIS

1/10/2024

Continued on page 2

NOTES- (11-14)

10) This truss design requires that a minimum of 7/16" structural wood sheathing be applied directly to the top chord and 1/2" gypsum sheetrock be applied directly to the bottom chord.
11) Graphical bracing representation does not depict the size, type or the orientation of the brace on the member. Symbol only indicates that the member must be braced.
12) Bearing symbols are only graphical representations of a possible bearing condition. Bearing symbols are not considered in the structural design of the truss to support the loads indicated.
13) Web bracing shown is for lateral support of individual web members only. Refer to BCSI - Guide to Good Practice for Handling, Installing, Restraining & Bracing of Metal Plate Connected Wood Trusses for additional bracing guidelines, including diagonal bracing.
14) SEE BCSI-B3 SUMMARY SHEET- PERMANENT RESTRAING/BRACING OF CHORDS & WEB MEMBERS FOR RECOMMENDED MINIMUM BRACING REQUIREMENTS OF TOP CHORD, BOTTOM CHORD, AND WEB PLANES. IN ADDITION TO THESE MINIMUM GUIDELINES, ALWAYS CONSULT THE PROJECT ARCHITECT OR ENGINEER FOR ADDITIONAL BRACING CONSIDERATIONS.

LOAD CASE(S) Standard

1/10/2024

Job	Truss	Truss Type	Qty	Ply	LOT 47 PROVIDENCE CREEK | 239 WINDSWEPT WAY FUQUAY-VARINA, NC
24-0180-R01	R04	Hip	1	1	Job Reference (optional) **# 44079**

Run: 8.430 s Feb 12 2021 Print: 8.430 s Feb 12 2021 MiTek Industries, Inc. Fri Jan 12 17:58:26 2024 Page 1
ID:P9Fbno1x1NcL_1BS5_FittyrTtl-v1zKZ7npet9oufNBlmhA2XRXz?8DKSim3_WSO2zw1Ih

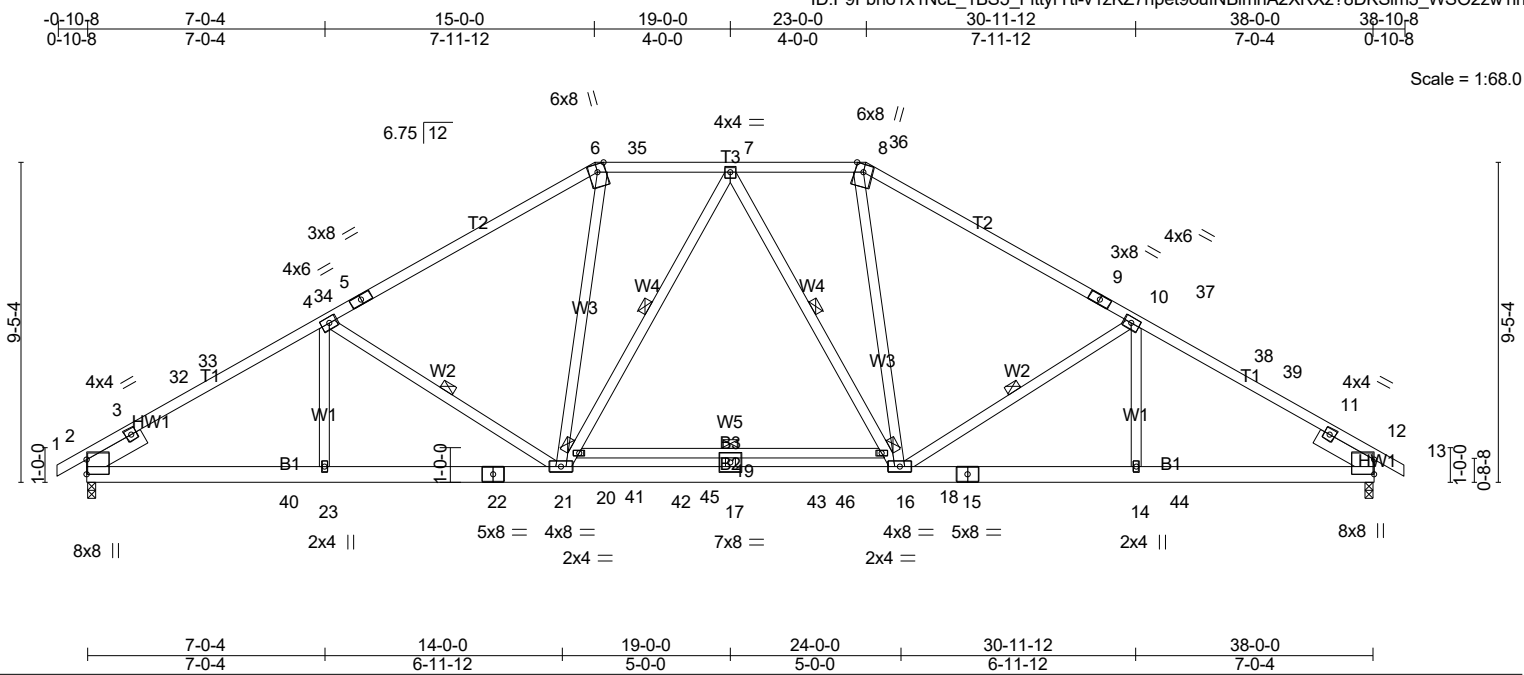

LOADING (psf)		SPACING- 2-0-0	CSI.	DEFL. in (loc) l/defl L/d	PLATES	GRIP
TCLL (roof)	20.0	Plate Grip DOL 1.15	TC 0.89	Vert(LL) -0.32 19 >999 240	MT20	244/190
Snow (Pf)	20.0	Lumber DOL 1.15	BC 0.84	Vert(CT) -0.52 19 >873 180		
TCDL	10.0	Rep Stress Incr YES	WB 0.34	Horz(CT) 0.11 12 n/a n/a		
BCLL	0.0 *	Code IRC2021/TPI2014	Matrix-AS		Weight: 270 lb	FT = 20%
BCDL	10.0					

LUMBER-
TOP CHORD 2x4 SP SS *Except*
T3: 2x4 SP No.2, T1: 2x4 SP No.1
BOT CHORD 2x6 SP No.1 *Except*
B3: 2x4 SP No.2
WEBS 2x4 SP No.3
SLIDER Left 2x6 SP No.2 -Ø 1-11-0, Right 2x6 SP No.2 -Ø 1-11-0

BRACING-
TOP CHORD Structural wood sheathing directly applied.
BOT CHORD Rigid ceiling directly applied. Except:
6-0-0 oc bracing: 18-20
WEBS 1 Row at midpt 4-21, 7-20, 7-18, 10-16

MiTek recommends that Stabilizers and required cross bracing be installed during truss erection, in accordance with Stabilizer Installation guide.

REACTIONS. (lb/size) 2=1665/0-3-8 (min. 0-2-7), 12=1665/0-3-8 (min. 0-2-7)
Max Horz 2=-178(LC 12)
Max Uplift2=-125(LC 14), 12=-125(LC 15)
Max Grav 2=2079(LC 39), 12=2079(LC 39)

FORCES. (lb) - Max. Comp./Max. Ten. - All forces 250 (lb) or less except when shown.
TOP CHORD 2-3=-1173/6, 3-32=-3136/182, 32-33=-3087/190, 4-33=-2939/210, 4-34=-2786/183, 5-34=-2773/187, 5-6=-2621/222, 6-35=-2189/254, 7-35=-2189/254, 7-36=-2189/254, 8-36=-2189/254, 8-9=-2621/222, 9-37=-2773/187, 10-37=-2786/183, 10-38=-2939/210, 38-39=-3087/190, 11-39=-3136/182, 11-12=-1173/6
BOT CHORD 2-40=-187/2696, 23-40=-187/2696, 22-23=-187/2696, 21-22=-187/2696, 21-41=0/2190, 41-42=0/2190, 17-42=0/2190, 17-43=0/2190, 16-43=0/2190, 15-16=-98/2640, 14-15=-98/2640, 14-44=-98/2640, 12-44=-98/2640
WEBS 4-21=-600/237, 6-21=0/817, 20-21=-319/145, 7-20=-253/186, 7-18=-253/186, 16-18=-318/145, 8-16=0/817, 10-16=-600/238, 17-19=-291/0

NOTES- (11-14)
1) Unbalanced roof live loads have been considered for this design.
2) Wind: ASCE 7-16; Vult=120mph (3-second gust) Vasd=95mph; TCDL=5.0psf; BCDL=5.0psf; h=35ft; Cat. II; Exp B; Enclosed; MWFRS (envelope) gable end zone and C-C Exterior(2E) -0-10-8 to 3-11-2, Interior(1) 3-11-2 to 8-3-0, Exterior(2R) 8-3-0 to 29-9-0, Interior(1) 29-9-0 to 34-0-14, Exterior(2E) 34-0-14 to 38-10-8 zone; cantilever left and right exposed ; end vertical left and right exposed;C-C for members and forces & MWFRS for reactions shown; Lumber DOL=1.60 plate grip DOL=1.60
3) TCLL: ASCE 7-16; Pr=20.0 psf (roof LL: Lum DOL=1.15 Plate DOL=1.15); Pf=20.0 psf (Lum DOL=1.15 Plate DOL=1.15); Is=1.0; Rough Cat B; Partially Exp.; Ce=1.0; Cs=1.00; Ct=1.10
4) Unbalanced snow loads have been considered for this design.
5) This truss has been designed for greater of min roof live load of 12.0 psf or 2.00 times flat roof load of 20.0 psf on overhangs non-concurrent with other live loads.
6) Provide adequate drainage to prevent water ponding.
7) This truss has been designed for a 10.0 psf bottom chord live load nonconcurrent with any other live loads.
8) * This truss has been designed for a live load of 30.0psf on the bottom chord in all areas where a rectangle 3-6-0 tall by 1-0-0 wide will fit between the bottom chord and any other members, with BCDL = 10.0psf.
9) Provide mechanical connection (by others) of truss to bearing plate capable of withstanding 100 lb uplift at joint(s) except (jt=lb) 2=125, 12=125.
10) This truss design requires that a minimum of 7/16" structural wood sheathing be applied directly to the top chord and 1/2" gypsum sheetrock be applied directly to the bottom chord.

NORTH CAROLINA PROFESSIONAL SEAL 28147 ENGINEER MARK K. MORRIS

1/10/2024

Continued on page 2

11) Graphical bracing representation does not depict the size, type or the orientation of the brace on the member. Symbol only indicates that the member must be braced.
12) Bearing symbols are only graphical representations of a possible bearing condition. Bearing symbols are not considered in the structural design of the truss to support the loads indicated.
13) Web bracing shown is for lateral support of individual web members only. Refer to BCSI - Guide to Good Practice for Handling, Installing, Restraining & Bracing of Metal Plate Connected Wood Trusses for additional bracing guidelines, including diagonal bracing.
14) SEE BCSI-B3 SUMMARY SHEET- PERMANENT RESTRAING/BRACING OF CHORDS & WEB MEMBERS FOR RECOMMENDED MINIMUM BRACING REQUIREMENTS OF TOP CHORD, BOTTOM CHORD, AND WEB PLANES. IN ADDITION TO THESE MINIMUM GUIDELINES, ALWAYS CONSULT THE PROJECT ARCHITECT OR ENGINEER FOR ADDITIONAL BRACING CONSIDERATIONS.

LOAD CASE(S) Standard

1/10/2024

Job	Truss	Truss Type	Qty	Ply	LOT 47 PROVIDENCE CREEK | 239 WINDSWEPT WAY FUQUAY-VARINA, NC
24-0180-R01	R05	Hip	1	1	Job Reference (optional) **# 44079**

Run: 8.430 s Feb 12 2021 Print: 8.430 s Feb 12 2021 MiTek Industries, Inc. Fri Jan 12 17:58:30 2024 Page 1
ID:P9Fbno1x1NcL_1BS5_FittyrTtl-noDqPVqJi6fDNGhy_cm6CNbDMcVnGFjM_cUgXqzw1ld

-0-10-8	6-7-12	13-0-0	19-0-0	25-0-0	31-4-4	38-0-0	38-10-8
0-10-8	6-7-12	6-4-4	6-0-0	6-0-0	6-4-4	6-7-12	0-10-8

Scale = 1:66.3

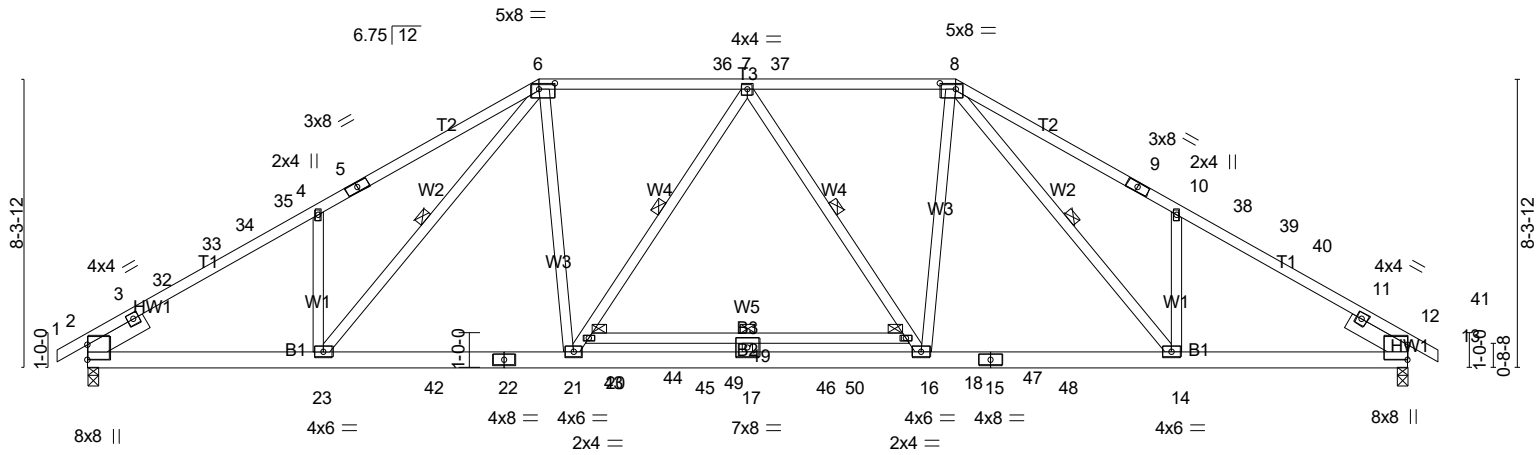

6-7-12	14-0-0	19-0-0	24-0-0	31-4-4	38-0-0
6-7-12	7-4-4	5-0-0	5-0-0	7-4-4	6-7-12

Plate Offsets (X,Y)-- [6:0-5-8,0-2-0], [8:0-5-8,0-2-0]

LOADING (psf)		**SPACING-** 2-0-0	**CSI.**	**DEFL.** in (loc) l/defl L/d	**PLATES**	**GRIP**
TCLL (roof)	20.0	Plate Grip DOL 1.15	TC 0.86	Vert(LL) -0.29 19 >999 240	MT20	244/190
Snow (Pf)	20.0	Lumber DOL 1.15	BC 0.87	Vert(CT) -0.50 19 >917 180		
TCDL	10.0	Rep Stress Incr YES	WB 0.40	Horz(CT) 0.10 12 n/a n/a		
BCLL	0.0 *	Code IRC2021/TPI2014	Matrix-AS		Weight: 268 lb	FT = 20%
BCDL	10.0					

LUMBER-
TOP CHORD 2x4 SP No.1 *Except*
T3: 2x4 SP No.2
BOT CHORD 2x6 SP No.1 *Except*
B3: 2x4 SP No.2
WEBS 2x4 SP No.3
SLIDER Left 2x6 SP No.2 -Ø 1-11-0, Right 2x6 SP No.2 -Ø 1-11-0

BRACING-
TOP CHORD Structural wood sheathing directly applied.
BOT CHORD Rigid ceiling directly applied. Except:
6-0-0 oc bracing: 18-20
WEBS 1 Row at midpt 6-23, 7-20, 7-18, 8-14

MiTek recommends that Stabilizers and required cross bracing be installed during truss erection, in accordance with Stabilizer Installation guide.

REACTIONS. (lb/size) 2=1667/0-3-8 (min. 0-2-7), 12=1667/0-3-8 (min. 0-2-7)
Max Horz 2=156(LC 13)
Max Uplift2=-109(LC 14), 12=-109(LC 15)
Max Grav 2=2088(LC 45), 12=2088(LC 45)

FORCES. (lb) - Max. Comp./Max. Ten. - All forces 250 (lb) or less except when shown.
TOP CHORD 2-32=-1032/0, 3-32=-1030/0, 3-33=-3134/219, 33-34=-3011/231, 34-35=-2945/243, 4-35=-2920/245, 4-5=-3144/333, 5-6=-3016/361, 6-36=-2427/260, 7-36=-2427/260, 7-37=-2427/260, 8-37=-2427/260, 8-9=-3016/361, 9-10=-3144/333, 10-38=-2920/245, 38-39=-2945/242, 39-40=-3011/231, 11-40=-3134/219, 11-41=-1030/0, 12-41=-1032/0
BOT CHORD 2-23=-142/2624, 23-42=-39/2343, 22-42=-39/2343, 22-43=-39/2343, 21-43=-39/2343, 21-44=-56/2577, 44-45=-56/2577, 17-45=-56/2577, 17-46=-56/2577, 16-46=-56/2577, 16-47=-39/2343, 15-47=-39/2343, 15-48=-39/2343, 14-48=-39/2343, 12-14=-128/2624
WEBS 4-23=-610/240, 6-23=-260/689, 6-21=0/983, 20-21=-441/149, 7-20=-413/176, 7-18=-413/176, 16-18=-441/147, 8-16=0/983, 8-14=-260/689, 10-14=-610/240, 17-19=-288/0

NOTES- (11-14)
1) Unbalanced roof live loads have been considered for this design.
2) Wind: ASCE 7-16; Vult=120mph (3-second gust) Vasd=95mph; TCDL=5.0psf; BCDL=5.0psf; h=35ft; Cat. II; Exp B; Enclosed; MWFRS (envelope) gable end zone and C-C Exterior(2E) -0-10-8 to 3-11-2, Interior(1) 3-11-2 to 6-2-9, Exterior(2R) 6-2-9 to 31-9-7, Interior(1) 31-9-7 to 34-0-14, Exterior(2E) 34-0-14 to 38-10-8 zone; cantilever left and right exposed ; end vertical left and right exposed;C-C for members and forces & MWFRS for reactions shown; Lumber DOL=1.60 plate grip DOL=1.60
3) TCLL: ASCE 7-16; Pr=20.0 psf (roof LL: Lum DOL=1.15 Plate DOL=1.15); Pf=20.0 psf (Lum DOL=1.15 Plate DOL=1.15); Is=1.0; Rough Cat B; Partially Exp.; Ce=1.0; Cs=1.00; Ct=1.10
4) Unbalanced snow loads have been considered for this design.
5) This truss has been designed for greater of min roof live load of 12.0 psf or 2.00 times flat roof load of 20.0 psf on overhangs non-concurrent with other live loads.
6) Provide adequate drainage to prevent water ponding.
7) This truss has been designed for a 10.0 psf bottom chord live load nonconcurrent with any other live loads.
8) * This truss has been designed for a live load of 30.0psf on the bottom chord in all areas where a rectangle 3-6-0 tall by 1-0-0 wide will fit between the bottom chord and any other members, with BCDL = 10.0psf.
9) Provide mechanical connection (by others) of truss to bearing plate capable of withstanding 100 lb uplift at joint(s) except (jt=lb) 2=109, 12=109.

NORTH CAROLINA PROFESSIONAL SEAL 28147 ENGINEER MARK K. MORRIS

1/10/2024

Continued on page 2

NOTES- (11-14)

10) This truss design requires that a minimum of 7/16" structural wood sheathing be applied directly to the top chord and 1/2" gypsum sheetrock be applied directly to the bottom chord.
11) Graphical bracing representation does not depict the size, type or the orientation of the brace on the member. Symbol only indicates that the member must be braced.
12) Bearing symbols are only graphical representations of a possible bearing condition. Bearing symbols are not considered in the structural design of the truss to support the loads indicated.
13) Web bracing shown is for lateral support of individual web members only. Refer to BCSI - Guide to Good Practice for Handling, Installing, Restraining & Bracing of Metal Plate Connected Wood Trusses for additional bracing guidelines, including diagonal bracing.
14) SEE BCSI-B3 SUMMARY SHEET- PERMANENT RESTRAING/BRACING OF CHORDS & WEB MEMBERS FOR RECOMMENDED MINIMUM BRACING REQUIREMENTS OF TOP CHORD, BOTTOM CHORD, AND WEB PLANES. IN ADDITION TO THESE MINIMUM GUIDELINES, ALWAYS CONSULT THE PROJECT ARCHITECT OR ENGINEER FOR ADDITIONAL BRACING CONSIDERATIONS.

LOAD CASE(S) Standard

1/10/2024

Job	Truss	Truss Type	Qty	Ply	LOT 47 PROVIDENCE CREEK | 239 WINDSWEPT WAY FUQUAY-VARINA, NC
24-0180-R01	R06	Hip	1	1	Job Reference (optional) **# 44079**

Run: 8.430 s Feb 12 2021 Print: 8.430 s Feb 12 2021 MiTek Industries, Inc. Fri Jan 12 17:58:33 2024 Page 1
ID:P9Fbno1x1NcL_1BS5_FittyrTtl-CNuz1XsC?11oEkQXfkKpq?Di8qXyTWeogaiK88zw1la

-0-10-8	5-7-12	11-0-0	19-0-0	27-0-0	32-4-4	38-0-0	38-10-8
0-10-8	5-7-12	5-4-4	8-0-0	8-0-0	5-4-4	5-7-12	0-10-8

Scale = 1:65.1

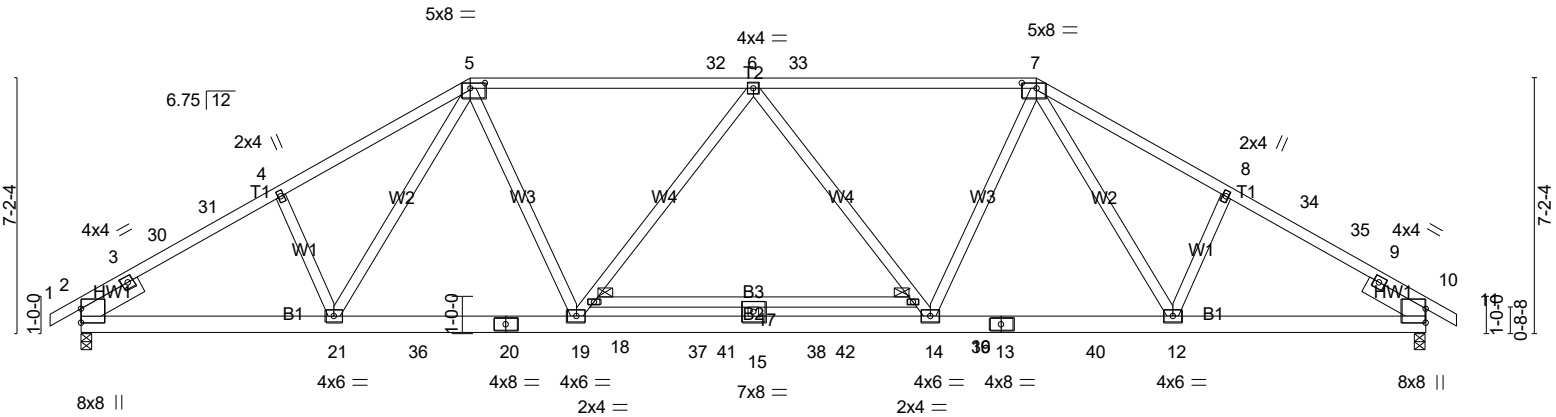

7-1-12	14-0-0	19-0-0	24-0-0	30-10-4	38-0-0
7-1-12	6-10-4	5-0-0	5-0-0	6-10-4	7-1-12

Plate Offsets (X,Y)-- [5:0-5-0,0-1-12], [7:0-5-0,0-1-12]

LOADING (psf)		**SPACING-** 2-0-0	**CSI.**	**DEFL.** in (loc) l/defl L/d	**PLATES**	**GRIP**
TCLL (roof)	20.0	Plate Grip DOL 1.15	TC 0.96	Vert(LL) -0.27 17 >999 240	MT20	244/190
Snow (Pf)	20.0	Lumber DOL 1.15	BC 0.84	Vert(CT) -0.49 17 >934 180		
TCDL	10.0	Rep Stress Incr YES	WB 0.71	Horz(CT) 0.10 10 n/a n/a		
BCLL	0.0 *	Code IRC2021/TPI2014	Matrix-AS		Weight: 255 lb	FT = 20%
BCDL	10.0					

LUMBER-
TOP CHORD 2x4 SP No.2 *Except*
T2: 2x4 SP No.1
BOT CHORD 2x6 SP No.1 *Except*
B3: 2x4 SP No.2
WEBS 2x4 SP No.3
SLIDER Left 2x6 SP No.2 -Ø 1-11-0, Right 2x6 SP No.2 -Ø 1-11-0

BRACING-
TOP CHORD Structural wood sheathing directly applied.
BOT CHORD Rigid ceiling directly applied.

MiTek recommends that Stabilizers and required cross bracing be installed during truss erection, in accordance with Stabilizer Installation guide.

REACTIONS. (lb/size) 2=1666/0-3-8 (min. 0-2-5), 10=1666/0-3-8 (min. 0-2-5)
Max Horz 2=-133(LC 12)
Max Uplift2=-92(LC 14), 10=-92(LC 15)
Max Grav 2=1963(LC 39), 10=1963(LC 39)

FORCES. (lb) - Max. Comp./Max. Ten. - All forces 250 (lb) or less except when shown.
TOP CHORD 2-3=-916/0, 3-30=-2830/252, 30-31=-2785/261, 4-31=-2679/272, 4-5=-2694/315, 5-32=-2775/251, 6-32=-2775/251, 6-33=-2775/251, 7-33=-2775/251, 7-8=-2694/315, 8-34=-2679/272, 34-35=-2785/261, 9-35=-2830/252, 9-10=-916/0
BOT CHORD 2-21=-155/2367, 21-36=-107/2354, 20-36=-107/2354, 19-20=-107/2354, 19-37=-84/2945, 15-37=-84/2945, 15-38=-84/2945, 38-39=-84/2945, 14-39=-84/2945, 13-14=-66/2354, 13-40=-66/2354, 12-40=-66/2354, 10-12=-155/2367
WEBS 4-21=-406/174, 5-21=-183/378, 5-19=-15/1045, 18-19=-557/156, 6-18=-595/198, 6-16=-595/198, 14-16=-557/155, 7-14=-15/1045, 7-12=-183/378, 8-12=-406/174, 15-17=-251/0

NOTES- (11-14)
1) Unbalanced roof live loads have been considered for this design.
2) Wind: ASCE 7-16; Vult=120mph (3-second gust) Vasd=95mph; TCDL=5.0psf; BCDL=5.0psf; h=35ft; Cat. II; Exp B; Enclosed; MWFRS (envelope) gable end zone and C-C Exterior(2E) -0-10-8 to 3-11-2, Exterior(2R) 3-11-2 to 17-9-7, Interior(1) 17-9-7 to 20-2-9, Exterior(2R) 20-2-9 to 34-0-14, Exterior(2E) 34-0-14 to 38-10-8 zone; cantilever left and right exposed ; end vertical left and right exposed;C-C for members and forces & MWFRS for reactions shown; Lumber DOL=1.60 plate grip DOL=1.60
3) TCLL: ASCE 7-16; Pr=20.0 psf (roof LL: Lum DOL=1.15 Plate DOL=1.15); Pf=20.0 psf (Lum DOL=1.15 Plate DOL=1.15); Is=1.0; Rough Cat B; Partially Exp.; Ce=1.0; Cs=1.00; Ct=1.10
4) Unbalanced snow loads have been considered for this design.
5) This truss has been designed for greater of min roof live load of 12.0 psf or 2.00 times flat roof load of 20.0 psf on overhangs non-concurrent with other live loads.
6) Provide adequate drainage to prevent water ponding.
7) This truss has been designed for a 10.0 psf bottom chord live load nonconcurrent with any other live loads.
8) * This truss has been designed for a live load of 30.0psf on the bottom chord in all areas where a rectangle 3-6-0 tall by 1-0-0 wide will fit between the bottom chord and any other members, with BCDL = 10.0psf.
9) Provide mechanical connection (by others) of truss to bearing plate capable of withstanding 100 lb uplift at joint(s) 2, 10.
10) This truss design requires that a minimum of 7/16" structural wood sheathing be applied directly to the top chord and 1/2" gypsum sheetrock be applied directly to the bottom chord.

NORTH CAROLINA PROFESSIONAL SEAL 28147 ENGINEER MARK K. MORRIS

1/10/2024

Continued on page 2

11) Graphical bracing representation does not depict the size, type or the orientation of the brace on the member. Symbol only indicates that the member must be braced.
12) Bearing symbols are only graphical representations of a possible bearing condition. Bearing symbols are not considered in the structural design of the truss to support the loads indicated.
13) Web bracing shown is for lateral support of individual web members only. Refer to BCSI - Guide to Good Practice for Handling, Installing, Restraining & Bracing of Metal Plate Connected Wood Trusses for additional bracing guidelines, including diagonal bracing.
14) SEE BCSI-B3 SUMMARY SHEET- PERMANENT RESTRAING/BRACING OF CHORDS & WEB MEMBERS FOR RECOMMENDED MINIMUM BRACING REQUIREMENTS OF TOP CHORD, BOTTOM CHORD, AND WEB PLANES. IN ADDITION TO THESE MINIMUM GUIDELINES, ALWAYS CONSULT THE PROJECT ARCHITECT OR ENGINEER FOR ADDITIONAL BRACING CONSIDERATIONS.

LOAD CASE(S) Standard

1/10/2024

Job	Truss	Truss Type	Qty	Ply	LOT 47 PROVIDENCE CREEK | 239 WINDSWEPT WAY FUQUAY-VARINA, NC
24-0180-R01	R07	Hip	1	1	Job Reference (optional) **# 44079**

Run: 8.430 s Feb 12 2021 Print: 8.430 s Feb 12 2021 MiTek Industries, Inc. Fri Jan 12 17:58:36 2024 Page 1
ID:P9Fbno1x1NcL_1BS5_FittyrTtl-cya6fYu4HyPN5C86KstWSdrFn1atgqAFMYx_ITzw1IX

-0-10-8	4-4-4	9-0-0	15-8-0	22-4-0	29-0-0	33-7-12	38-0-0	38-10-8
0-10-8	4-4-4	4-7-12	6-8-0	6-8-0	6-8-0	4-7-12	4-4-4	0-10-8

Scale = 1:65.5

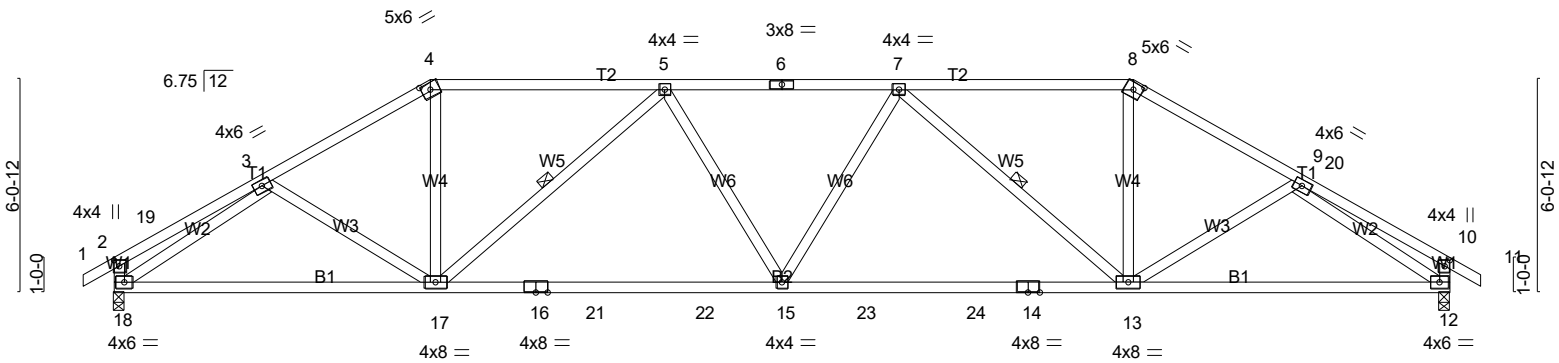

9-0-0	19-0-0	29-0-0	38-0-0
9-0-0	10-0-0	10-0-0	9-0-0

Plate Offsets (X,Y)-- [2:0-2-0,0-1-12], [4:0-3-0,0-2-5], [8:0-3-0,0-2-5], [10:0-2-0,0-1-12]

LOADING (psf)		**SPACING-** 2-0-0	**CSI.**	**DEFL.** in (loc) l/defl L/d	**PLATES**	**GRIP**
TCLL (roof)	20.0	Plate Grip DOL 1.15	TC 0.80	Vert(LL) -0.33 13-15 >999 240	MT20	244/190
Snow (Pf)	20.0	Lumber DOL 1.15	BC 0.76	Vert(CT) -0.55 13-15 >827 180		
TCDL	10.0	Rep Stress Incr YES	WB 0.92	Horz(CT) 0.14 12 n/a n/a		
BCLL	0.0 *	Code IRC2021/TPI2014	Matrix-AS		Weight: 213 lb	FT = 20%
BCDL	10.0					

LUMBER-
TOP CHORD 2x4 SP No.2
BOT CHORD 2x4 SP No.1 *Except*
B2: 2x4 SP SS
WEBS 2x4 SP No.3 *Except*
W2: 2x4 SP No.1

BRACING-
TOP CHORD Structural wood sheathing directly applied, except end verticals.
BOT CHORD Rigid ceiling directly applied.
WEBS 1 Row at midpt 5-17, 7-13

MiTek recommends that Stabilizers and required cross bracing be installed during truss erection, in accordance with Stabilizer Installation guide.

REACTIONS. (lb/size) 18=1570/0-3-8 (min. 0-2-1), 12=1570/0-3-8 (min. 0-2-1)
Max Horz 18=-136(LC 12)
Max Uplift 18=-121(LC 14), 12=-121(LC 15)
Max Grav 18=1732(LC 38), 12=1732(LC 38)

FORCES. (lb) - Max. Comp./Max. Ten. - All forces 250 (lb) or less except when shown.
TOP CHORD 2-19=-444/37, 3-19=-354/39, 3-4=-2662/286, 4-5=-2331/284, 5-6=-3321/315, 6-7=-3321/315, 7-8=-2331/284, 8-9=-2662/286, 9-20=-354/39, 10-20=-444/37, 2-18=-488/81, 10-12=-488/81
BOT CHORD 17-18=-260/2084, 16-17=-335/3263, 16-21=-335/3263, 21-22=-335/3263, 15-22=-335/3263, 15-23=-302/3263, 23-24=-302/3263, 14-24=-302/3263, 13-14=-302/3263, 12-13=-165/2084
WEBS 3-17=-183/328, 4-17=-10/883, 5-17=-1245/232, 5-15=0/290, 7-15=0/290, 7-13=-1245/232, 8-13=-10/883, 9-13=-183/329, 3-18=-2238/270, 9-12=-2238/270

NOTES- (11-14)
1) Unbalanced roof live loads have been considered for this design.
2) Wind: ASCE 7-16; Vult=120mph (3-second gust) Vasd=95mph; TCDL=5.0psf; BCDL=5.0psf; h=35ft; Cat. II; Exp B; Enclosed; MWFRS (envelope) gable end zone and C-C Exterior(2E) -0-10-8 to 3-11-2, Exterior(2R) 3-11-2 to 15-8-0, Interior(1) 15-8-0 to 22-2-9, Exterior(2R) 22-2-9 to 34-0-14, Exterior(2E) 34-0-14 to 38-10-8 zone; cantilever left and right exposed ; end vertical left and right exposed;C-C for members and forces & MWFRS for reactions shown; Lumber DOL=1.60 plate grip DOL=1.60
3) TCLL: ASCE 7-16; Pr=20.0 psf (roof LL: Lum DOL=1.15 Plate DOL=1.15); Pf=20.0 psf (Lum DOL=1.15 Plate DOL=1.15); Is=1.0; Rough Cat B; Partially Exp.; Ce=1.0; Cs=1.00; Ct=1.10
4) Unbalanced snow loads have been considered for this design.
5) This truss has been designed for greater of min roof live load of 12.0 psf or 2.00 times flat roof load of 20.0 psf on overhangs non-concurrent with other live loads.
6) Provide adequate drainage to prevent water ponding.
7) This truss has been designed for a 10.0 psf bottom chord live load nonconcurrent with any other live loads.
8) * This truss has been designed for a live load of 30.0psf on the bottom chord in all areas where a rectangle 3-6-0 tall by 1-0-0 wide will fit between the bottom chord and any other members, with BCDL = 10.0psf.
9) Provide mechanical connection (by others) of truss to bearing plate capable of withstanding 100 lb uplift at joint(s) except (jt=lb) 18=121, 12=121.
10) This truss design requires that a minimum of 7/16" structural wood sheathing be applied directly to the top chord and 1/2" gypsum sheetrock be applied directly to the bottom chord.

NORTH CAROLINA PROFESSIONAL SEAL 28147 ENGINEER MARK K. MORRIS

1/10/2024

Continued on page 2

11) Graphical bracing representation does not depict the size, type or the orientation of the brace on the member. Symbol only indicates that the member must be braced.
12) Bearing symbols are only graphical representations of a possible bearing condition. Bearing symbols are not considered in the structural design of the truss to support the loads indicated.
13) Web bracing shown is for lateral support of individual web members only. Refer to BCSI - Guide to Good Practice for Handling, Installing, Restraining & Bracing of Metal Plate Connected Wood Trusses for additional bracing guidelines, including diagonal bracing.
14) SEE BCSI-B3 SUMMARY SHEET- PERMANENT RESTRAING/BRACING OF CHORDS & WEB MEMBERS FOR RECOMMENDED MINIMUM BRACING REQUIREMENTS OF TOP CHORD, BOTTOM CHORD, AND WEB PLANES. IN ADDITION TO THESE MINIMUM GUIDELINES, ALWAYS CONSULT THE PROJECT ARCHITECT OR ENGINEER FOR ADDITIONAL BRACING CONSIDERATIONS.

LOAD CASE(S) Standard

1/10/2024

Job	Truss	Truss Type	Qty	Ply	LOT 47 PROVIDENCE CREEK | 239 WINDSWEPT WAY FUQUAY-VARINA, NC
24-0180-R01	R08	Hip	1	1	Job Reference (optional) **# 44079**

Run: 8.430 s Feb 12 2021 Print: 8.430 s Feb 12 2021 MiTek Industries, Inc. Fri Jan 12 17:58:38 2024 Page 1
ID:P9Fbno1x1NcL_1BS5_FittyrTtl-YLis4EwKpZf5KVIVSHv_X2waorF58koXpsQ5qMzw1IV

-0-10-8 | 7-0-0 | 14-11-7 | 23-0-9 | 31-0-0 | 38-0-0 | 38-10-8
0-10-8 | 7-0-0 | 7-11-7 | 8-1-3 | 7-11-7 | 7-0-0 | 0-10-8

Scale = 1:64.9

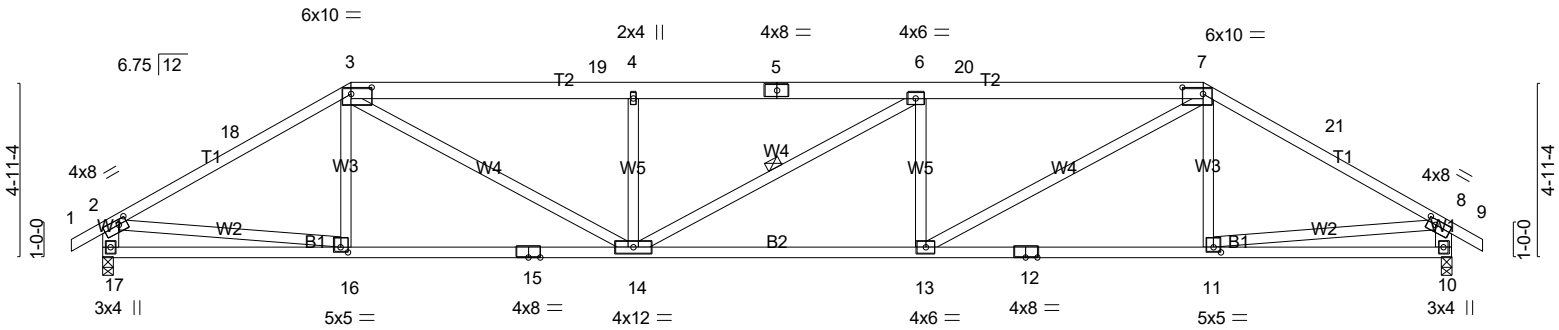

7-0-0 | 14-11-7 | 23-0-9 | 31-0-0 | 38-0-0
7-0-0 | 7-11-7 | 8-1-3 | 7-11-7 | 7-0-0

Plate Offsets (X,Y)-- [2:0-2-12,0-1-12], [3:0-7-0,0-2-4], [7:0-7-0,0-2-4], [8:0-2-12,0-1-12], [11:0-2-8,0-1-12], [16:0-2-8,0-1-12]

LOADING (psf)		**SPACING-** 2-0-0	**CSI.**	**DEFL.** in (loc) l/defl L/d	**PLATES**	**GRIP**
TCLL (roof)	20.0	Plate Grip DOL 1.15	TC 0.83	Vert(LL) -0.32 13-14 >999 240	MT20	244/190
Snow (Pf)	20.0	Lumber DOL 1.15	BC 0.77	Vert(CT) -0.54 13-14 >840 180		
TCDL	10.0	Rep Stress Incr YES	WB 0.91	Horz(CT) 0.12 10 n/a n/a		
BCLL	0.0 *	Code IRC2021/TPI2014	Matrix-AS		Weight: 226 lb	FT = 20%
BCDL	10.0					

LUMBER-
TOP CHORD 2x4 SP No.2 *Except*
T2: 2x6 SP No.2
BOT CHORD 2x4 SP No.2 *Except*
B2: 2x4 SP No.1
WEBS 2x4 SP No.3 *Except*
W1: 2x6 SP No.2

BRACING-
TOP CHORD Structural wood sheathing directly applied, except end verticals.
BOT CHORD Rigid ceiling directly applied.
WEBS 1 Row at midpt 6-14

MiTek recommends that Stabilizers and required cross bracing be installed during truss erection, in accordance with Stabilizer Installation guide.

REACTIONS. (lb/size) 17=1568/0-3-8 (min. 0-2-3), 10=1568/0-3-8 (min. 0-2-3)
Max Horz 17=-114(LC 12)
Max Uplift17=-159(LC 11), 10=-159(LC 10)
Max Grav 17=1874(LC 38), 10=1874(LC 38)

FORCES. (lb) - Max. Comp./Max. Ten. - All forces 250 (lb) or less except when shown.
TOP CHORD 2-18=-2889/269, 3-18=-2793/285, 3-19=-4339/462, 4-19=-4343/461, 4-5=-4339/460, 5-6=-4339/460, 6-20=-4341/462, 7-20=-4338/462, 7-21=-2793/285, 8-21=-2889/269, 2-17=-1805/208, 8-10=-1806/208
BOT CHORD 16-17=-171/594, 15-16=-279/2473, 14-15=-279/2473, 13-14=-440/4338, 12-13=-175/2473, 11-12=-175/2473, 10-11=-131/586
WEBS 3-14=-307/2159, 4-14=-922/220, 6-13=-920/236, 7-13=-307/2157, 2-16=-240/2188, 8-11=-246/2189

NOTES- (11-14)
1) Unbalanced roof live loads have been considered for this design.
2) Wind: ASCE 7-16; Vult=120mph (3-second gust) Vasd=95mph; TCDL=5.0psf; BCDL=5.0psf; h=35ft; Cat. II; Exp B; Enclosed; MWFRS (envelope) gable end zone and C-C Exterior(2E) -0-10-8 to 3-11-2, Exterior(2R) 3-11-2 to 13-9-7, Interior(1) 13-9-7 to 24-2-9, Exterior(2R) 24-2-9 to 34-0-14, Exterior(2E) 34-0-14 to 38-10-8 zone; cantilever left and right exposed ; end vertical left and right exposed;C-C for members and forces & MWFRS for reactions shown; Lumber DOL=1.60 plate grip DOL=1.60
3) TCLL: ASCE 7-16; Pr=20.0 psf (roof LL: Lum DOL=1.15 Plate DOL=1.15); Pf=20.0 psf (Lum DOL=1.15 Plate DOL=1.15); Is=1.0; Rough Cat B; Partially Exp.; Ce=1.0; Cs=1.00; Ct=1.10
4) Unbalanced snow loads have been considered for this design.
5) This truss has been designed for greater of min roof live load of 12.0 psf or 2.00 times flat roof load of 20.0 psf on overhangs non-concurrent with other live loads.
6) Provide adequate drainage to prevent water ponding.
7) This truss has been designed for a 10.0 psf bottom chord live load nonconcurrent with any other live loads.
8) * This truss has been designed for a live load of 30.0psf on the bottom chord in all areas where a rectangle 3-6-0 tall by 1-0-0 wide will fit between the bottom chord and any other members.
9) Provide mechanical connection (by others) of truss to bearing plate capable of withstanding 100 lb uplift at joint(s) except (jt=lb) 17=159, 10=159.
10) This truss design requires that a minimum of 7/16" structural wood sheathing be applied directly to the top chord and 1/2" gypsum sheetrock be applied directly to the bottom chord.

NORTH CAROLINA PROFESSIONAL SEAL 28147 ENGINEER MARK K. MORRIS

1/10/2024

Continued on page 2

11) Graphical bracing representation does not depict the size, type or the orientation of the brace on the member. Symbol only indicates that the member must be braced.
12) Bearing symbols are only graphical representations of a possible bearing condition. Bearing symbols are not considered in the structural design of the truss to support the loads indicated.
13) Web bracing shown is for lateral support of individual web members only. Refer to BCSI - Guide to Good Practice for Handling, Installing, Restraining & Bracing of Metal Plate Connected Wood Trusses for additional bracing guidelines, including diagonal bracing.
14) SEE BCSI-B3 SUMMARY SHEET- PERMANENT RESTRAING/BRACING OF CHORDS & WEB MEMBERS FOR RECOMMENDED MINIMUM BRACING REQUIREMENTS OF TOP CHORD, BOTTOM CHORD, AND WEB PLANES. IN ADDITION TO THESE MINIMUM GUIDELINES, ALWAYS CONSULT THE PROJECT ARCHITECT OR ENGINEER FOR ADDITIONAL BRACING CONSIDERATIONS.

LOAD CASE(S) Standard

1/10/2024

Job	Truss	Truss Type	Qty	Ply	LOT 47 PROVIDENCE CREEK | 239 WINDSWEPT WAY FUQUAY-VARINA, NC
24-0180-R01	R09	Hip Girder	1	2	Job Reference (optional) **# 44079**

Run: 8.430 s Feb 12 2021 Print: 8.430 s Feb 12 2021 MiTek Industries, Inc. Fri Jan 12 17:58:47 2024 Page 1
ID:P9Fbno1x1NcL_1BS5_FittyrTtl-o4lGzJ1_iKopvuUETga5Oyo5pTlnlt1sul53eKzw1lM

-0-10-8	5-0-0	10-8-4	16-2-12	21-9-4	27-3-12	33-0-0	38-0-0	38-10-8
0-10-8	5-0-0	5-8-4	5-6-8	5-6-8	5-6-8	5-8-4	5-0-0	0-10-8

Scale: 3/16"=1'

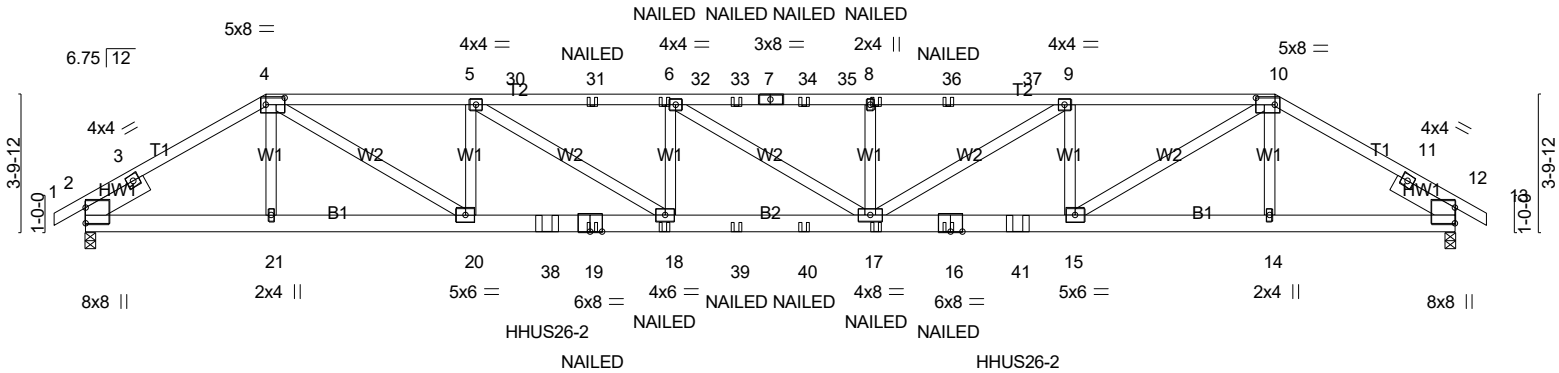

5-0-0	10-8-4	16-2-12	21-9-4	27-3-12	33-0-0	38-0-0
5-0-0	5-8-4	5-6-8	5-6-8	5-6-8	5-8-4	5-0-0

Plate Offsets (X,Y)-- [4:0-6-4,0-2-4], [10:0-6-4,0-2-4]

LOADING (psf)		**SPACING-** 2-0-0	**CSI.**	**DEFL.** in (loc) l/defl L/d	**PLATES**	**GRIP**
TCLL (roof)	20.0	Plate Grip DOL 1.15	TC 0.94	Vert(LL) -0.48 17-18 >947 240	MT20	244/190
Snow (Pf)	20.0	Lumber DOL 1.15	BC 0.93	Vert(CT) -0.75 17-18 >609 180		
TCDL	10.0	Rep Stress Incr NO	WB 0.65	Horz(CT) 0.11 12 n/a n/a		
BCLL	0.0 *	Code IRC2021/TPI2014	Matrix-MSH		Weight: 465 lb	FT = 20%
BCDL	10.0					

LUMBER-
TOP CHORD 2x4 SP No.2 *Except*
T2: 2x4 SP No.1
BOT CHORD 2x6 SP No.1
WEBS 2x4 SP No.3 *Except*
W2: 2x4 SP No.2
SLIDER Left 2x6 SP No.2 -Ø 1-11-0, Right 2x6 SP No.2 -Ø 1-11-0

BRACING-
TOP CHORD Structural wood sheathing directly applied or 3-1-9 oc purlins.
BOT CHORD Rigid ceiling directly applied or 10-0-0 oc bracing.

REACTIONS. (lb/size) 2=2856/0-3-8 (min. 0-1-14), 12=2881/0-3-8 (min. 0-1-14)
Max Horz 2=-66(LC 58)
Max Uplift2=-443(LC 9), 12=-447(LC 8)
Max Grav 2=3130(LC 36), 12=3156(LC 36)

FORCES. (lb) - Max. Comp./Max. Ten. - All forces 250 (lb) or less except when shown.
TOP CHORD 2-3=-2423/364, 3-4=-4883/737, 4-5=-8643/1360, 5-30=-10639/1718, 30-31=-10639/1718, 6-31=-10639/1718, 6-32=-10564/1705, 32-33=-10564/1705, 7-33=-10564/1705, 7-34=-10564/1705, 34-35=-10564/1705, 8-35=-10564/1705, 8-36=-10564/1705, 36-37=-10564/1705, 9-37=-10564/1705, 9-10=-8720/1373, 10-11=-4925/745, 11-12=-2442/368
BOT CHORD 2-21=-642/4167, 20-21=-636/4145, 20-38=-1354/8643, 19-38=-1354/8643, 18-19=-1354/8643, 18-39=-1713/10639, 39-40=-1713/10639, 17-40=-1713/10639, 16-17=-1324/8720, 16-41=-1324/8720, 15-41=-1324/8720, 14-15=-584/4181, 12-14=-590/4203
WEBS 4-21=-521/165, 4-20=-891/5256, 5-20=-1927/409, 5-18=-454/2349, 6-18=-754/290, 8-17=-790/287, 9-17=-423/2170, 9-15=-1837/393, 10-15=-899/5304, 10-14=-522/165

NOTES- (15-18)
1) 2-ply truss to be connected together with 10d (0.131"x3") nails as follows:
Top chords connected as follows: 2x4 - 1 row at 0-7-0 oc.
Bottom chords connected as follows: 2x6 - 2 rows staggered at 0-9-0 oc.
Webs connected as follows: 2x4 - 1 row at 0-9-0 oc.
2) All loads are considered equally applied to all plies, except if noted as front (F) or back (B) face in the LOAD CASE(S) section. Ply to ply connections have been provided to distribute only loads noted as (F) or (B), unless otherwise indicated.
3) Unbalanced roof live loads have been considered for this design.
4) Wind: ASCE 7-16; Vult=120mph (3-second gust) Vasd=95mph; TCDL=5.0psf; BCDL=5.0psf; h=35ft; Cat. II; Exp B; Enclosed; MWFRS (envelope) gable end zone; cantilever left and right exposed ; end vertical left and right exposed; Lumber DOL=1.60 plate grip DOL=1.60
5) TCLL: ASCE 7-16; Pr=20.0 psf (roof LL: Lum DOL=1.15 Plate DOL=1.15); Pf=20.0 psf (Lum DOL=1.15 Plate DOL=1.15); Is=1.0; Rough Cat B; Partially Exp.; Ce=1.0; Cs=1.00; Ct=1.10
6) Unbalanced snow loads have been considered for this design.
7) This truss has been designed for greater of min roof live load of 12.0 psf or 2.00 times flat roof load of 20.0 psf on overhangs non-concurrent with other live loads.
8) Provide adequate drainage to prevent water ponding.
9) This truss has been designed for a 10.0 psf bottom chord live load nonconcurrent with any other live loads.

NORTH CAROLINA PROFESSIONAL SEAL 28147 ENGINEER MARK K. MORRIS

1/10/2024

Continued on page 2

NOTES- (15-18)

10) * This truss has been designed for a live load of 30.0psf on the bottom chord in all areas where a rectangle 3-6-0 tall by 1-0-0 wide will fit between the bottom chord and any other members.
11) Provide mechanical connection (by others) of truss to bearing plate capable of withstanding 100 lb uplift at joint(s) except (jt=lb) 2=443, 12=447.
12) Use Simpson Strong-Tie HHUS26-2 (14-10d Girder, 4-10d Truss) or equivalent spaced at 13-0-12 oc max. starting at 12-9-10 from the left end to 25-10-6 to connect truss(es) J05 (2 ply 2x6 SP) to back face of bottom chord.
13) Fill all nail holes where hanger is in contact with lumber.
14) "NAILED" indicates 3-10d (0.148"x3") or 3-12d (0.148"x3.25") toe-nails per NDS guidlines.
15) Graphical bracing representation does not depict the size, type or the orientation of the brace on the member. Symbol only indicates that the member must be braced.
16) Bearing symbols are only graphical representations of a possible bearing condition. Bearing symbols are not considered in the structural design of the truss to support the loads indicated.
17) Web bracing shown is for lateral support of individual web members only. Refer to BCSI - Guide to Good Practice for Handling, Installing, Restraining & Bracing of Metal Plate Connected Wood Trusses for additional bracing guidelines, including diagonal bracing.
18) SEE BCSI-B3 SUMMARY SHEET- PERMANENT RESTRAING/BRACING OF CHORDS & WEB MEMBERS FOR RECOMMENDED MINIMUM BRACING REQUIREMENTS OF TOP CHORD, BOTTOM CHORD, AND WEB PLANES. IN ADDITION TO THESE MINIMUM GUIDELINES, ALWAYS CONSULT THE PROJECT ARCHITECT OR ENGINEER FOR ADDITIONAL BRACING CONSIDERATIONS.

LOAD CASE(S) Standard

1) Dead + Snow (balanced): Lumber Increase=1.15, Plate Increase=1.15
   Uniform Loads (plf)
   Vert: 1-4=-60, 4-10=-60, 10-13=-60, 22-26=-20
   Concentrated Loads (lb)
   Vert: 19=-43(B) 18=-43(B) 6=-147(B) 8=-147(B) 17=-43(B) 16=-43(B) 31=-147(B) 33=-147(B) 34=-147(B) 36=-147(B) 38=-726(B) 39=-43(B) 40=-43(B) 41=-726(B)

NORTH CAROLINA PROFESSIONAL SEAL 28147 ENGINEER MARK K. MORRIS

1/10/2024

Job	Truss	Truss Type	Qty	Ply	LOT 47 PROVIDENCE CREEK | 239 WINDSWEPT WAY FUQUAY-VARINA, NC
24-0180-R01	R10	Common	2	1	Job Reference (optional) **# 44079**

Run: 8.430 s Feb 12 2021 Print: 8.430 s Feb 12 2021 MiTek Industries, Inc. Fri Jan 12 17:58:48 2024 Page 1
ID:P9Fbno1x1NcL_1BS5_FittyrTtl-GGIeAf2cTewgX23Q1O5Kx9LM5tmRUT807PrdAnzw1IL

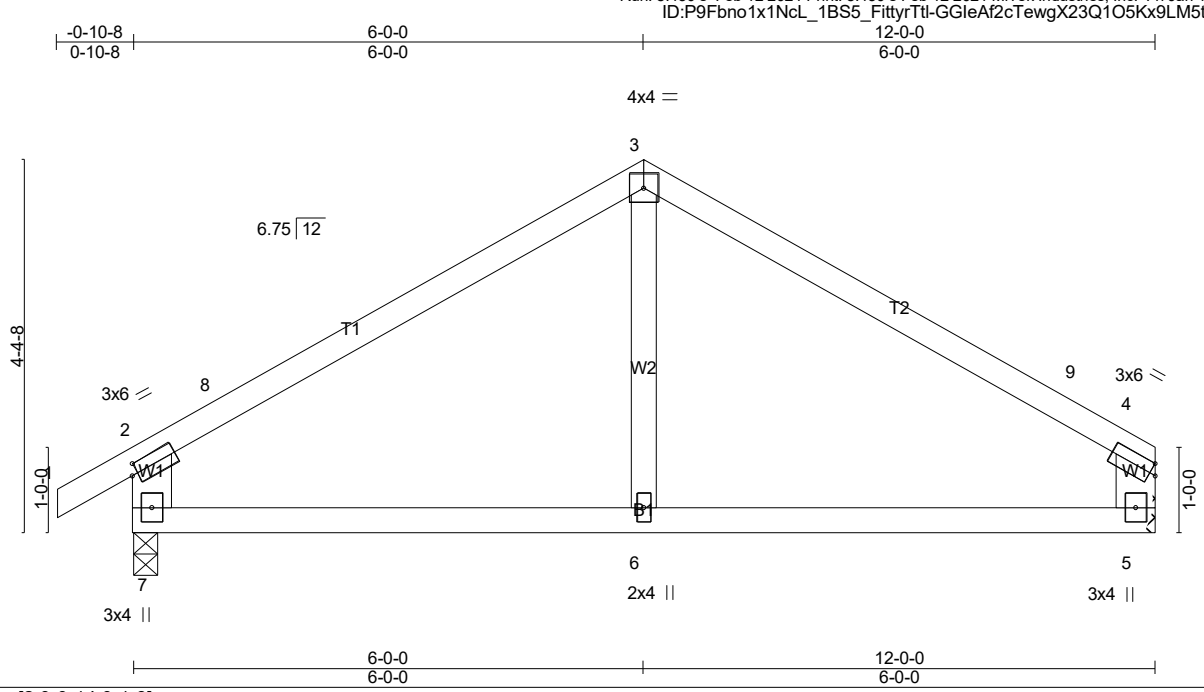

Plate Offsets (X,Y)-- [2:0-0-14,0-1-8]

LOADING (psf)		**SPACING-** 2-0-0	**CSI.**	**DEFL.** in (loc) l/defl L/d	**PLATES**	**GRIP**
TCLL (roof)	20.0	Plate Grip DOL 1.15	TC 0.53	Vert(LL) -0.03 6-7 >999 240	MT20	244/190
Snow (Pf)	20.0	Lumber DOL 1.15	BC 0.39	Vert(CT) -0.06 6-7 >999 180		
TCDL	10.0	Rep Stress Incr YES	WB 0.08	Horz(CT) 0.01 5 n/a n/a		
BCLL	0.0 *	Code IRC2021/TPI2014	Matrix-AS		Weight: 49 lb	FT = 20%
BCDL	10.0					

LUMBER-
TOP CHORD 2x4 SP No.2
BOT CHORD 2x4 SP No.2
WEBS 2x6 SP No.2 *Except*
W2: 2x4 SP No.3

BRACING-
TOP CHORD Structural wood sheathing directly applied, except end verticals.
BOT CHORD Rigid ceiling directly applied.

MiTek recommends that Stabilizers and required cross bracing be installed during truss erection, in accordance with Stabilizer Installation guide.

REACTIONS. (lb/size) 7=531/0-3-8 (min. 0-1-8), 5=458/Mechanical
Max Horz 7=100(LC 13)
Max Uplift7=-74(LC 14), 5=-53(LC 15)
Max Grav 7=612(LC 21), 5=541(LC 22)

FORCES. (lb) - Max. Comp./Max. Ten. - All forces 250 (lb) or less except when shown.
TOP CHORD 2-8=-557/97, 3-8=-461/123, 3-9=-455/122, 4-9=-554/98, 2-7=-551/173, 4-5=-475/123
BOT CHORD 6-7=-15/368, 5-6=-15/368

NOTES- (11-14)
1) Unbalanced roof live loads have been considered for this design.
2) Wind: ASCE 7-16; Vult=120mph (3-second gust) Vasd=95mph; TCDL=5.0psf; BCDL=5.0psf; h=35ft; Cat. II; Exp B; Enclosed; MWFRS (envelope) gable end zone and C-C Exterior(2E) -0-10-8 to 3-11-2, Exterior(2R) 3-11-2 to 6-11-10, Exterior(2E) 6-11-10 to 11-9-4 zone; cantilever left and right exposed ; end vertical left and right exposed;C-C for members and forces & MWFRS for reactions shown; Lumber DOL=1.60 plate grip DOL=1.60
3) TCLL: ASCE 7-16; Pr=20.0 psf (roof LL: Lum DOL=1.15 Plate DOL=1.15); Pf=20.0 psf (Lum DOL=1.15 Plate DOL=1.15); Is=1.0; Rough Cat B; Partially Exp.; Ce=1.0; Cs=1.00; Ct=1.10
4) Unbalanced snow loads have been considered for this design.
5) This truss has been designed for greater of min roof live load of 12.0 psf or 2.00 times flat roof load of 20.0 psf on overhangs non-concurrent with other live loads.
6) This truss has been designed for a 10.0 psf bottom chord live load nonconcurrent with any other live loads.
7) * This truss has been designed for a live load of 30.0psf on the bottom chord in all areas where a rectangle 3-6-0 tall by 1-0-0 wide will fit between the bottom chord and any other members.
8) Refer to girder(s) for truss to truss connections.
9) Provide mechanical connection (by others) of truss to bearing plate capable of withstanding 100 lb uplift at joint(s) 7, 5.
10) This truss design requires that a minimum of 7/16" structural wood sheathing be applied directly to the top chord and 1/2" gypsum sheetrock be applied directly to the bottom chord.
11) Graphical bracing representation does not depict the size, type or the orientation of the brace on the member. Symbol only indicates that the member must be braced.
12) Bearing symbols are only graphical representations of a possible bearing condition. Bearing symbols are not considered in the structural design of the truss to support the loads indicated.
13) Web bracing shown is for lateral support of individual web members only. Refer to BCSI - Guide to Good Practice for Handling, Installing, Restraining & Bracing of Metal Plate Connected Wood Trusses for additional bracing guidelines, including diagonal bracing.
14) SEE BCSI-B3 SUMMARY SHEET- PERMANENT RESTRAING/BRACING OF CHORDS & WEB MEMBERS FOR RECOMMENDED MINIMUM BRACING REQUIREMENTS OF TOP CHORD, BOTTOM CHORD, AND WEB PLANES. IN ADDITION TO THESE MINIMUM GUIDELINES, ALWAYS CONSULT THE PROJECT ARCHITECT OR ENGINEER FOR ADDITIONAL BRACING CONSIDERATIONS.

NORTH CAROLINA PROFESSIONAL SEAL 28147 ENGINEER MARK K. MORRIS

1/10/2024

Continued on page 2

LOAD CASE(S) Standard

1/10/2024

Warning !—Verify design parameters and read notes before use. This design is based only upon parameters shown, and is for an individual building component to be installed and loaded vertically. Applicability of design parameters and proper incorporation of component is responsibility of building designer – not truss designer or truss engineer. Bracing shown is for lateral support of individual web members only. Additional temporary bracing to ensure stability during construction is the responsibility of the erector. Additional permanent bracing of the overall structure is the responsibility of the building designer. For general guidance regarding fabrication, quality control, storage, delivery, erection and bracing, consult ANSI/TPI 1 *National Design Standard for Metal Plate Connected Wood Truss Construction* and BCSI 1-03 Guide to *Good Practice for Handling, Installing & Bracing of Metal Plate Connected Wood Trusses* from Truss Plate Institute, 583 D'Onofrio Drive, Madison, WI 53719.

Job	Truss	Truss Type	Qty	Ply	LOT 47 PROVIDENCE CREEK | 239 WINDSWEPT WAY FUQUAY-VARINA, NC
24-0180-R01	R11	Common Supported Gable	1	1	Job Reference (optional) **# 44079**

Run: 8.430 s Feb 12 2021 Print: 8.430 s Feb 12 2021 MiTek Industries, Inc. Fri Jan 12 17:58:50 2024 Page 1
ID:P9Fbno1x1NcL_1BS5_FittyrTtl-CfQObL3s_FAOmLDo9p7o0aQpxgXAyN8JajKkFfzw1IJ

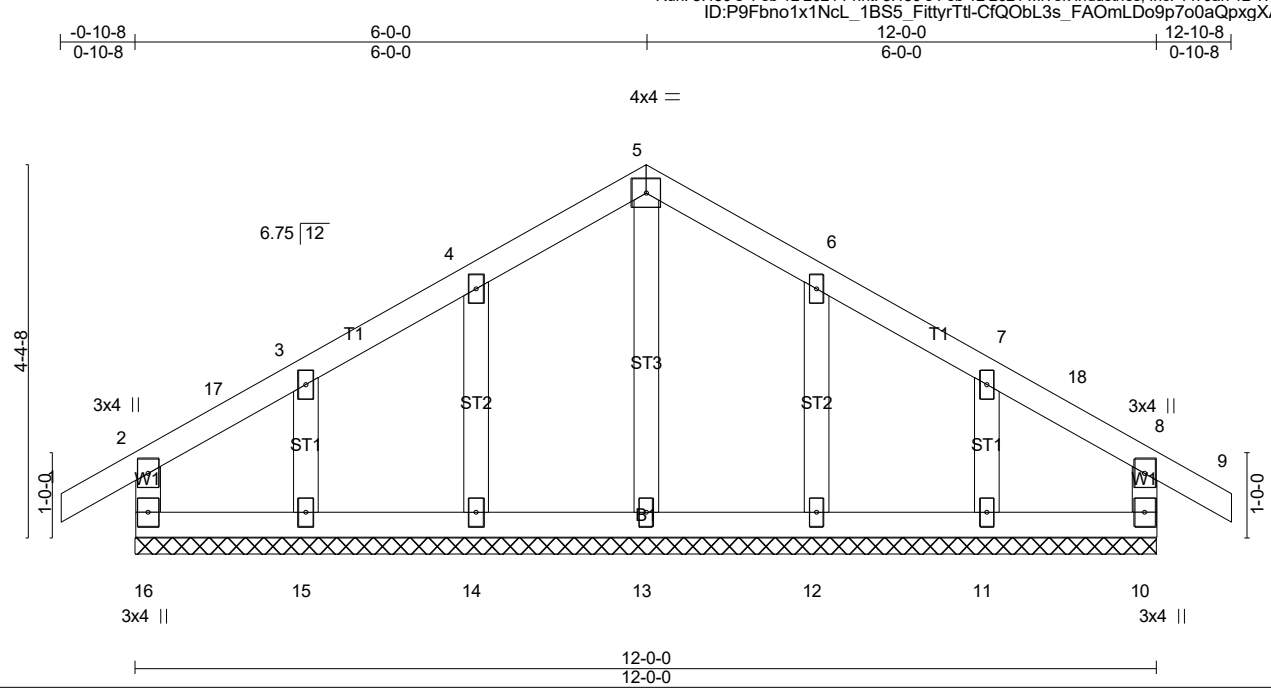

LOADING (psf)		SPACING-	2-0-0	CSI.		DEFL.	in	(loc)	l/defl	L/d	PLATES	GRIP
TCLL (roof)	20.0	Plate Grip DOL	1.15	TC	0.12	Vert(LL)	-0.00	9	n/r	180	MT20	244/190
Snow (Pf)	20.0	Lumber DOL	1.15	BC	0.05	Vert(CT)	-0.00	9	n/r	80		
TCDL	10.0	Rep Stress Incr	YES	WB	0.05	Horz(CT)	0.00	10	n/a	n/a		
BCLL	0.0 *	Code IRC2021/TPI2014		Matrix-R							Weight: 62 lb	FT = 20%
BCDL	10.0											

LUMBER-
TOP CHORD 2x4 SP No.2
BOT CHORD 2x4 SP No.3
WEBS 2x4 SP No.3
OTHERS 2x4 SP No.3

BRACING-
TOP CHORD Structural wood sheathing directly applied or 6-0-0 oc purlins, except end verticals.
BOT CHORD Rigid ceiling directly applied or 6-0-0 oc bracing.

MiTek recommends that Stabilizers and required cross bracing be installed during truss erection, in accordance with Stabilizer Installation guide.

REACTIONS. All bearings 12-0-0.
(lb) - Max Horz 16=-102(LC 12)
Max Uplift All uplift 100 lb or less at joint(s) 16, 10, 14, 15, 12, 11
Max Grav All reactions 250 lb or less at joint(s) 16, 10, 13, 15, 11 except 14=251(LC 21), 12=251(LC 22)

FORCES. (lb) - Max. Comp./Max. Ten. - All forces 250 (lb) or less except when shown.

NOTES- (14-17)
1) Unbalanced roof live loads have been considered for this design.
2) Wind: ASCE 7-16; Vult=120mph (3-second gust) Vasd=95mph; TCDL=5.0psf; BCDL=5.0psf; h=35ft; Cat. II; Exp B; Enclosed; MWFRS (envelope) gable end zone and C-C Corner(3E) -0-10-8 to 4-0-0, Corner(3R) 4-0-0 to 8-0-0, Corner(3E) 8-0-0 to 12-10-8 zone; cantilever left and right exposed ; end vertical left and right exposed;C-C for members and forces & MWFRS for reactions shown; Lumber DOL=1.60 plate grip DOL=1.60
3) Truss designed for wind loads in the plane of the truss only. For studs exposed to wind (normal to the face), see Standard Industry Gable End Details as applicable, or consult qualified building designer as per ANSI/TPI 1.
4) TCLL: ASCE 7-16; Pr=20.0 psf (roof LL: Lum DOL=1.15 Plate DOL=1.15); Pf=20.0 psf (Lum DOL=1.15 Plate DOL=1.15); Is=1.0; Rough Cat B; Partially Exp.; Ce=1.0; Cs=1.00; Ct=1.10
5) Unbalanced snow loads have been considered for this design.
6) This truss has been designed for greater of min roof live load of 12.0 psf or 2.00 times flat roof load of 20.0 psf on overhangs non-concurrent with other live loads.
7) All plates are 2x4 MT20 unless otherwise indicated.
8) Gable requires continuous bottom chord bearing.
9) Truss to be fully sheathed from one face or securely braced against lateral movement (i.e. diagonal web).
10) Gable studs spaced at 2-0-0 oc.
11) This truss has been designed for a 10.0 psf bottom chord live load nonconcurrent with any other live loads.
12) * This truss has been designed for a live load of 30.0psf on the bottom chord in all areas where a rectangle 3-6-0 tall by 1-0-0 wide will fit between the bottom chord and any other members.
13) Provide mechanical connection (by others) of truss to bearing plate capable of withstanding 100 lb uplift at joint(s) 16, 10, 14, 15, 12, 11.

NORTH CAROLINA PROFESSIONAL SEAL 28147 ENGINEER MARK K. MORRIS

1/10/2024

Continued on page 2

14) Graphical bracing representation does not depict the size, type or the orientation of the brace on the member. Symbol only indicates that the member must be braced.
15) Bearing symbols are only graphical representations of a possible bearing condition. Bearing symbols are not considered in the structural design of the truss to support the loads indicated.
16) Web bracing shown is for lateral support of individual web members only. Refer to BCSI - Guide to Good Practice for Handling, Installing, Restraining & Bracing of Metal Plate Connected Wood Trusses for additional bracing guidelines, including diagonal bracing.
17) SEE BCSI-B3 SUMMARY SHEET- PERMANENT RESTRAING/BRACING OF CHORDS & WEB MEMBERS FOR RECOMMENDED MINIMUM BRACING REQUIREMENTS OF TOP CHORD, BOTTOM CHORD, AND WEB PLANES. IN ADDITION TO THESE MINIMUM GUIDELINES, ALWAYS CONSULT THE PROJECT ARCHITECT OR ENGINEER FOR ADDITIONAL BRACING CONSIDERATIONS.

LOAD CASE(S) Standard

1/10/2024

Job	Truss	Truss Type	Qty	Ply	LOT 47 PROVIDENCE CREEK | 239 WINDSWEPT WAY FUQUAY-VARINA, NC
24-0180-R01	R12	Common	2	1	Job Reference (optional) **# 44079**

Run: 8.430 s Feb 12 2021 Print: 8.430 s Feb 12 2021 MiTek Industries, Inc. Fri Jan 12 17:58:51 2024 Page 1
ID:P9Fbno1x1NcL_1BS5_FittyrTtl-gr_mph4UlZIFOVo?iWe1ZozmJ4o7hpHSpN3Hn6zw1Il

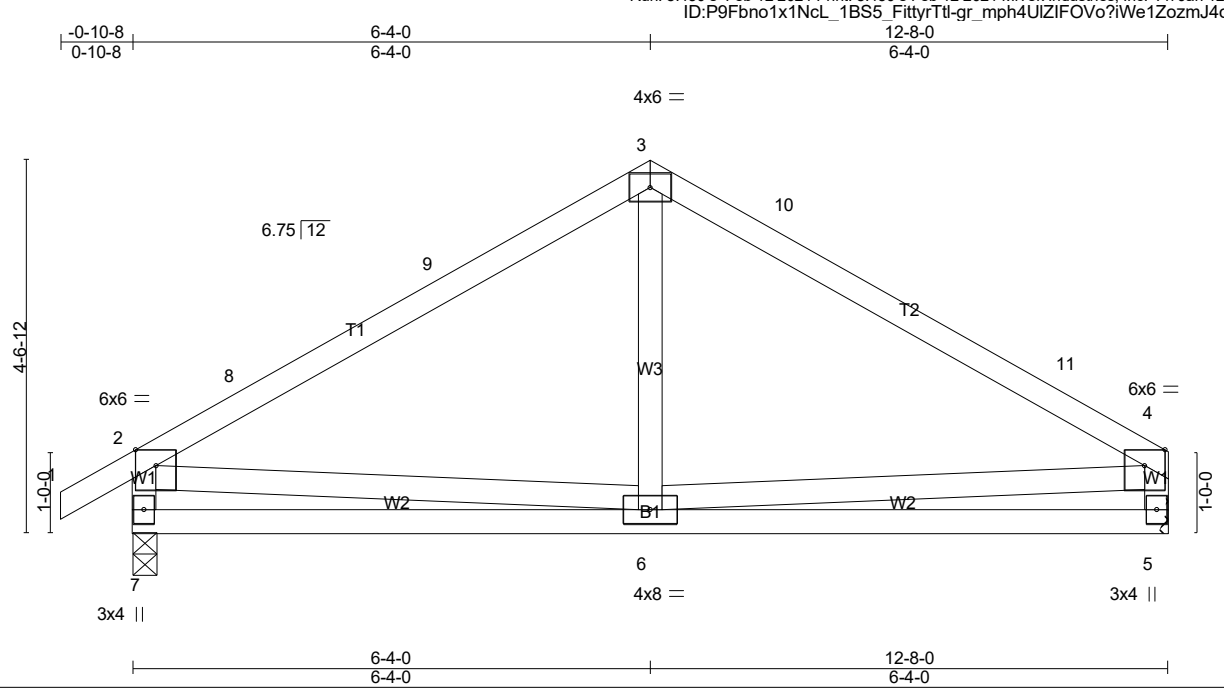

LOADING (psf)		SPACING- 2-0-0	CSI.	DEFL. in (loc) l/defl L/d	PLATES GRIP
TCLL (roof)	20.0	Plate Grip DOL 1.15	TC 0.98	Vert(LL) -0.03 6-7 >999 240	MT20 244/190
Snow (Pf)	20.0	Lumber DOL 1.15	BC 0.33	Vert(CT) -0.06 6-7 >999 180	
TCDL	10.0	Rep Stress Incr YES	WB 0.12	Horz(CT) 0.01 5 n/a n/a	
BCLL	0.0 *	Code IRC2021/TPI2014	Matrix-AS		Weight: 67 lb FT = 20%
BCDL	10.0				

LUMBER-
TOP CHORD 2x4 SP No.2
BOT CHORD 2x4 SP No.2
WEBS 2x4 SP No.3

BRACING-
TOP CHORD Structural wood sheathing directly applied, except end verticals.
BOT CHORD Rigid ceiling directly applied.

MiTek recommends that Stabilizers and required cross bracing be installed during truss erection, in accordance with Stabilizer Installation guide.

REACTIONS. (lb/size) 7=559/0-3-8 (min. 0-1-8), 5=492/Mechanical
Max Horz 7=103(LC 13)
Max Uplift7=-76(LC 14), 5=-57(LC 15)
Max Grav 7=634(LC 21), 5=569(LC 22)

FORCES. (lb) - Max. Comp./Max. Ten. - All forces 250 (lb) or less except when shown.
TOP CHORD 2-8=-617/92, 8-9=-486/105, 3-9=-464/120, 3-10=-436/117, 10-11=-486/102, 4-11=-615/94, 2-7=-576/161, 4-5=-511/117
BOT CHORD 6-7=-146/402, 5-6=-83/338
WEBS 2-6=-46/293, 4-6=-39/290

NOTES- (11-14)
1) Unbalanced roof live loads have been considered for this design.
2) Wind: ASCE 7-16; Vult=120mph (3-second gust) Vasd=95mph; TCDL=5.0psf; BCDL=5.0psf; h=35ft; Cat. II; Exp B; Enclosed; MWFRS (envelope) gable end zone and C-C Exterior(2E) -0-10-8 to 3-11-2, Exterior(2R) 3-11-2 to 7-8-10, Exterior(2E) 7-8-10 to 12-6-4 zone; cantilever left and right exposed ; end vertical left and right exposed;C-C for members and forces & MWFRS for reactions shown; Lumber DOL=1.60 plate grip DOL=1.60
3) TCLL: ASCE 7-16; Pr=20.0 psf (roof LL: Lum DOL=1.15 Plate DOL=1.15); Pf=20.0 psf (Lum DOL=1.15 Plate DOL=1.15); Is=1.0; Rough Cat B; Partially Exp.; Ce=1.0; Cs=1.00; Ct=1.10
4) Unbalanced snow loads have been considered for this design.
5) This truss has been designed for greater of min roof live load of 12.0 psf or 2.00 times flat roof load of 20.0 psf on overhangs non-concurrent with other live loads.
6) This truss has been designed for a 10.0 psf bottom chord live load nonconcurrent with any other live loads.
7) * This truss has been designed for a live load of 30.0psf on the bottom chord in all areas where a rectangle 3-6-0 tall by 1-0-0 wide will fit between the bottom chord and any other members.
8) Refer to girder(s) for truss to truss connections.
9) Provide mechanical connection (by others) of truss to bearing plate capable of withstanding 100 lb uplift at joint(s) 7, 5.
10) This truss design requires that a minimum of 7/16" structural wood sheathing be applied directly to the top chord and 1/2" gypsum sheetrock be applied directly to the bottom chord.

NORTH CAROLINA PROFESSIONAL SEAL 28147 ENGINEER MARK K. MORRIS

1/10/2024

Continued on page 2

11) Graphical bracing representation does not depict the size, type or the orientation of the brace on the member. Symbol only indicates that the member must be braced.
12) Bearing symbols are only graphical representations of a possible bearing condition. Bearing symbols are not considered in the structural design of the truss to support the loads indicated.
13) Web bracing shown is for lateral support of individual web members only. Refer to BCSI - Guide to Good Practice for Handling, Installing, Restraining & Bracing of Metal Plate Connected Wood Trusses for additional bracing guidelines, including diagonal bracing.
14) SEE BCSI-B3 SUMMARY SHEET- PERMANENT RESTRAING/BRACING OF CHORDS & WEB MEMBERS FOR RECOMMENDED MINIMUM BRACING REQUIREMENTS OF TOP CHORD, BOTTOM CHORD, AND WEB PLANES. IN ADDITION TO THESE MINIMUM GUIDELINES, ALWAYS CONSULT THE PROJECT ARCHITECT OR ENGINEER FOR ADDITIONAL BRACING CONSIDERATIONS.

LOAD CASE(S) Standard

1/10/2024

Job	Truss	Truss Type	Qty	Ply	LOT 47 PROVIDENCE CREEK | 239 WINDSWEPT WAY FUQUAY-VARINA, NC
24-0180-R01	R13	Common	3	1	Job Reference (optional) **# 44079**

Run: 8.430 s Feb 12 2021 Print: 8.430 s Feb 12 2021 MiTek Industries, Inc. Fri Jan 12 17:58:53 2024 Page 1
ID:P9Fbno1x1NcL_1BS5_FittyrTtl-cD6XDM6kHAYzdpyNqxgVeD26kuUb9jtlGhYOr_zw1IG

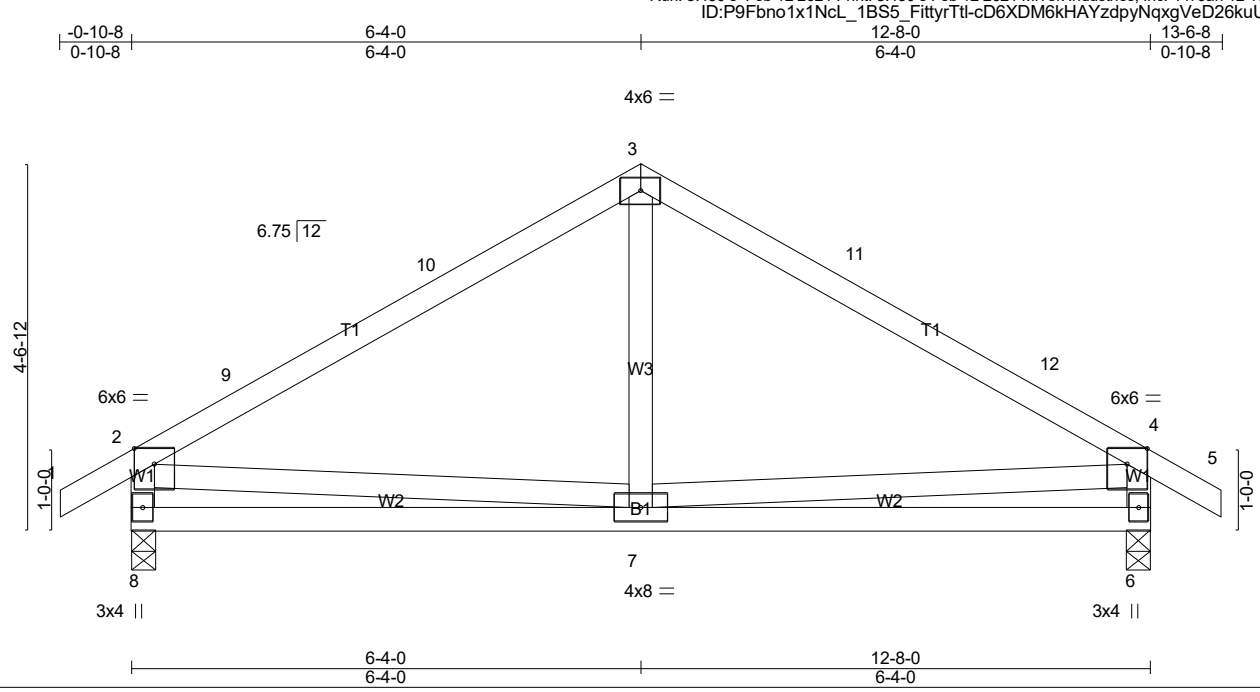

LOADING (psf)		SPACING-	2-0-0	CSI.		DEFL.	in	(loc)	l/defl	L/d	PLATES	GRIP
TCLL (roof)	20.0	Plate Grip DOL	1.15	TC	0.98	Vert(LL)	-0.03	6-7	>999	240	MT20	244/190
Snow (Pf)	20.0	Lumber DOL	1.15	BC	0.33	Vert(CT)	-0.06	6-7	>999	180		
TCDL	10.0	Rep Stress Incr	YES	WB	0.12	Horz(CT)	0.01	6	n/a	n/a		
BCLL	0.0 *	Code IRC2021/TPI2014		Matrix-AS							Weight: 69 lb	FT = 20%
BCDL	10.0											

LUMBER-
TOP CHORD 2x4 SP No.2
BOT CHORD 2x4 SP No.2
WEBS 2x4 SP No.3

BRACING-
TOP CHORD Structural wood sheathing directly applied, except end verticals.
BOT CHORD Rigid ceiling directly applied.

MiTek recommends that Stabilizers and required cross bracing be installed during truss erection, in accordance with Stabilizer Installation guide.

REACTIONS. (lb/size) 8=556/0-3-8 (min. 0-1-8), 6=556/0-3-8 (min. 0-1-8)
Max Horz 8=106(LC 13)
Max Uplift8=-77(LC 14), 6=-77(LC 15)
Max Grav 8=633(LC 21), 6=633(LC 22)

FORCES. (lb) - Max. Comp./Max. Ten. - All forces 250 (lb) or less except when shown.
TOP CHORD 2-9=-614/91, 9-10=-478/104, 3-10=-461/118, 3-11=-461/118, 11-12=-478/104, 4-12=-614/91, 2-8=-575/161, 4-6=-575/161
BOT CHORD 7-8=-138/404, 6-7=-103/404
WEBS 2-7=-43/279, 4-7=-50/279

NOTES- (10-13)
1) Unbalanced roof live loads have been considered for this design.
2) Wind: ASCE 7-16; Vult=120mph (3-second gust) Vasd=95mph; TCDL=5.0psf; BCDL=5.0psf; h=35ft; Cat. II; Exp B; Enclosed; MWFRS (envelope) gable end zone and C-C Exterior(2E) -0-10-8 to 3-11-2, Exterior(2R) 3-11-2 to 8-8-14, Exterior(2E) 8-8-14 to 13-6-8 zone; cantilever left and right exposed ; end vertical left and right exposed;C-C for members and forces & MWFRS for reactions shown; Lumber DOL=1.60 plate grip DOL=1.60
3) TCLL: ASCE 7-16; Pr=20.0 psf (roof LL: Lum DOL=1.15 Plate DOL=1.15); Pf=20.0 psf (Lum DOL=1.15 Plate DOL=1.15); Is=1.0; Rough Cat B; Partially Exp.; Ce=1.0; Cs=1.00; Ct=1.10
4) Unbalanced snow loads have been considered for this design.
5) This truss has been designed for greater of min roof live load of 12.0 psf or 2.00 times flat roof load of 20.0 psf on overhangs non-concurrent with other live loads.
6) This truss has been designed for a 10.0 psf bottom chord live load nonconcurrent with any other live loads.
7) * This truss has been designed for a live load of 30.0psf on the bottom chord in all areas where a rectangle 3-6-0 tall by 1-0-0 wide will fit between the bottom chord and any other members.
8) Provide mechanical connection (by others) of truss to bearing plate capable of withstanding 100 lb uplift at joint(s) 8, 6.
9) This truss design requires that a minimum of 7/16" structural wood sheathing be applied directly to the top chord and 1/2" gypsum sheetrock be applied directly to the bottom chord.
10) Graphical bracing representation does not depict the size, type or the orientation of the brace on the member. Symbol only indicates that the member must be braced.
11) Bearing symbols are only graphical representations of a possible bearing condition. Bearing symbols are not considered in the structural design of the truss to support the loads indicated.
12) Web bracing shown is for lateral support of individual web members only. Refer to BCSI - Guide to Good Practice for Handling, Installing, Restraining & Bracing of Metal Plate Connected Wood Trusses for additional bracing guidelines, including diagonal bracing.
13) SEE BCSI-B3 SUMMARY SHEET- PERMANENT RESTRAING/BRACING OF CHORDS & WEB MEMBERS FOR RECOMMENDED MINIMUM BRACING REQUIREMENTS OF TOP CHORD, BOTTOM CHORD, AND WEB PLANES. IN ADDITION TO THESE MINIMUM GUIDELINES, ALWAYS CONSULT THE PROJECT ARCHITECT OR ENGINEER FOR ADDITIONAL BRACING CONSIDERATIONS.

NORTH CAROLINA PROFESSIONAL SEAL 28147 ENGINEER MARK K. MORRIS

1/10/2024

Continued on page 2

LOAD CASE(S) Standard

1/10/2024

Job	Truss	Truss Type	Qty	Ply	LOT 47 PROVIDENCE CREEK | 239 WINDSWEPT WAY FUQUAY-VARINA, NC
24-0180-R01	R14	Common Supported Gable	1	1	Job Reference (optional) **# 44079**

Run: 8.430 s Feb 12 2021 Print: 8.430 s Feb 12 2021 MiTek Industries, Inc. Fri Jan 12 17:58:54 2024 Page 1
ID:P9Fbno1x1NcL_1BS5_FittyrTtl-4QgvRi6N2UgpFzWaOeCkAQbVwHvzuB5uVLIxORzw1IF

-0-10-8 | 6-4-0 | 12-8-0 | 13-6-8
0-10-8 | 6-4-0 | 6-4-0 | 0-10-8

Scale = 1:28.2

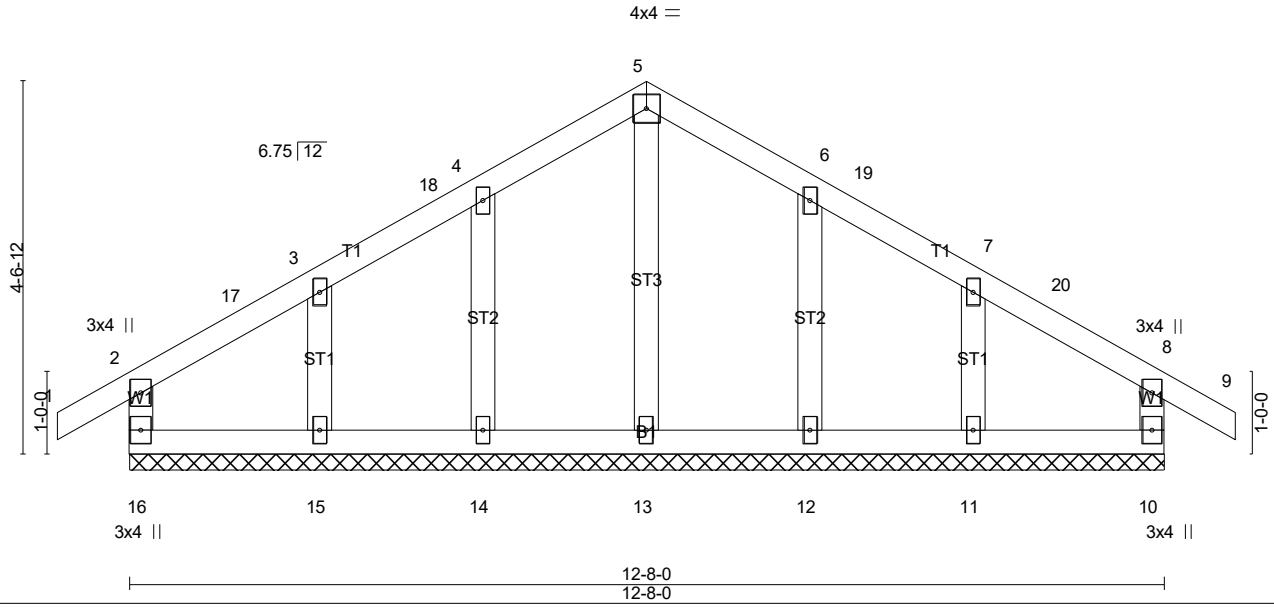

LOADING (psf)		SPACING-	2-0-0	CSI.		DEFL.	in	(loc)	l/defl	L/d	PLATES	GRIP
TCLL (roof)	20.0	Plate Grip DOL	1.15	TC	0.12	Vert(LL)	-0.00	9	n/r	180	MT20	244/190
Snow (Pf)	20.0	Lumber DOL	1.15	BC	0.06	Vert(CT)	-0.00	9	n/r	80		
TCDL	10.0	Rep Stress Incr	YES	WB	0.05	Horz(CT)	0.00	10	n/a	n/a		
BCLL	0.0 *	Code IRC2021/TPI2014		Matrix-R							Weight: 65 lb	FT = 20%
BCDL	10.0											

LUMBER-
TOP CHORD 2x4 SP No.2
BOT CHORD 2x4 SP No.3
WEBS 2x4 SP No.3
OTHERS 2x4 SP No.3

BRACING-
TOP CHORD Structural wood sheathing directly applied or 6-0-0 oc purlins, except end verticals.
BOT CHORD Rigid ceiling directly applied or 6-0-0 oc bracing.

MiTek recommends that Stabilizers and required cross bracing be installed during truss erection, in accordance with Stabilizer Installation guide.

REACTIONS. All bearings 12-8-0.
(lb) - Max Horz 16=106(LC 13)
Max Uplift All uplift 100 lb or less at joint(s) 16, 10, 14, 15, 12, 11
Max Grav All reactions 250 lb or less at joint(s) 16, 10, 13, 14, 15, 12, 11

FORCES. (lb) - Max. Comp./Max. Ten. - All forces 250 (lb) or less except when shown.

NOTES- (14-17)
1) Unbalanced roof live loads have been considered for this design.
2) Wind: ASCE 7-16; Vult=120mph (3-second gust) Vasd=95mph; TCDL=5.0psf; BCDL=5.0psf; h=35ft; Cat. II; Exp B; Enclosed; MWFRS (envelope) gable end zone and C-C Corner(3E) -0-10-8 to 3-11-2, Corner(3R) 3-11-2 to 8-8-14, Corner(3E) 8-8-14 to 13-6-8 zone; cantilever left and right exposed ; end vertical left and right exposed;C-C for members and forces & MWFRS for reactions shown; Lumber DOL=1.60 plate grip DOL=1.60
3) Truss designed for wind loads in the plane of the truss only. For studs exposed to wind (normal to the face), see Standard Industry Gable End Details as applicable, or consult qualified building designer as per ANSI/TPI 1.
4) TCLL: ASCE 7-16; Pr=20.0 psf (roof LL: Lum DOL=1.15 Plate DOL=1.15); Pf=20.0 psf (Lum DOL=1.15 Plate DOL=1.15); Is=1.0; Rough Cat B; Partially Exp.; Ce=1.0; Cs=1.00; Ct=1.10
5) Unbalanced snow loads have been considered for this design.
6) This truss has been designed for greater of min roof live load of 12.0 psf or 2.00 times flat roof load of 20.0 psf on overhangs non-concurrent with other live loads.
7) All plates are 2x4 MT20 unless otherwise indicated.
8) Gable requires continuous bottom chord bearing.
9) Truss to be fully sheathed from one face or securely braced against lateral movement (i.e. diagonal web).
10) Gable studs spaced at 2-0-0 oc.
11) This truss has been designed for a 10.0 psf bottom chord live load nonconcurrent with any other live loads.
12) * This truss has been designed for a live load of 30.0psf on the bottom chord in all areas where a rectangle 3-6-0 tall by 1-0-0 wide will fit between the bottom chord and any other members.
13) Provide mechanical connection (by others) of truss to bearing plate capable of withstanding 100 lb uplift at joint(s) 16, 10, 14, 15, 12, 11.

NORTH CAROLINA PROFESSIONAL SEAL 28147 ENGINEER MARK K. MORRIS

1/10/2024

Continued on page 2

14) Graphical bracing representation does not depict the size, type or the orientation of the brace on the member. Symbol only indicates that the member must be braced.
15) Bearing symbols are only graphical representations of a possible bearing condition. Bearing symbols are not considered in the structural design of the truss to support the loads indicated.
16) Web bracing shown is for lateral support of individual web members only. Refer to BCSI - Guide to Good Practice for Handling, Installing, Restraining & Bracing of Metal Plate Connected Wood Trusses for additional bracing guidelines, including diagonal bracing.
17) SEE BCSI-B3 SUMMARY SHEET- PERMANENT RESTRAING/BRACING OF CHORDS & WEB MEMBERS FOR RECOMMENDED MINIMUM BRACING REQUIREMENTS OF TOP CHORD, BOTTOM CHORD, AND WEB PLANES. IN ADDITION TO THESE MINIMUM GUIDELINES, ALWAYS CONSULT THE PROJECT ARCHITECT OR ENGINEER FOR ADDITIONAL BRACING CONSIDERATIONS.

LOAD CASE(S) Standard

1/10/2024

Job	Truss	Truss Type	Qty	Ply	LOT 47 PROVIDENCE CREEK | 239 WINDSWEPT WAY FUQUAY-VARINA, NC
24-0180-R01	SP01	Common Supported Gable	1	1	Job Reference (optional) **# 44079**

Run: 8.430 s Feb 12 2021 Print: 8.430 s Feb 12 2021 MiTek Industries, Inc. Fri Jan 12 17:58:55 2024 Page 1
ID:l8799bTYYbxotYa75q2Yk9yieyH-ZcDHe27?pnogt65mxMjzje7e1hDidd92k?1Vwtzw1lE

-0-10-8 | 6-0-0 | 12-0-0 | 12-10-8
0-10-8 | 6-0-0 | 6-0-0 | 0-10-8

Scale = 1:21.6

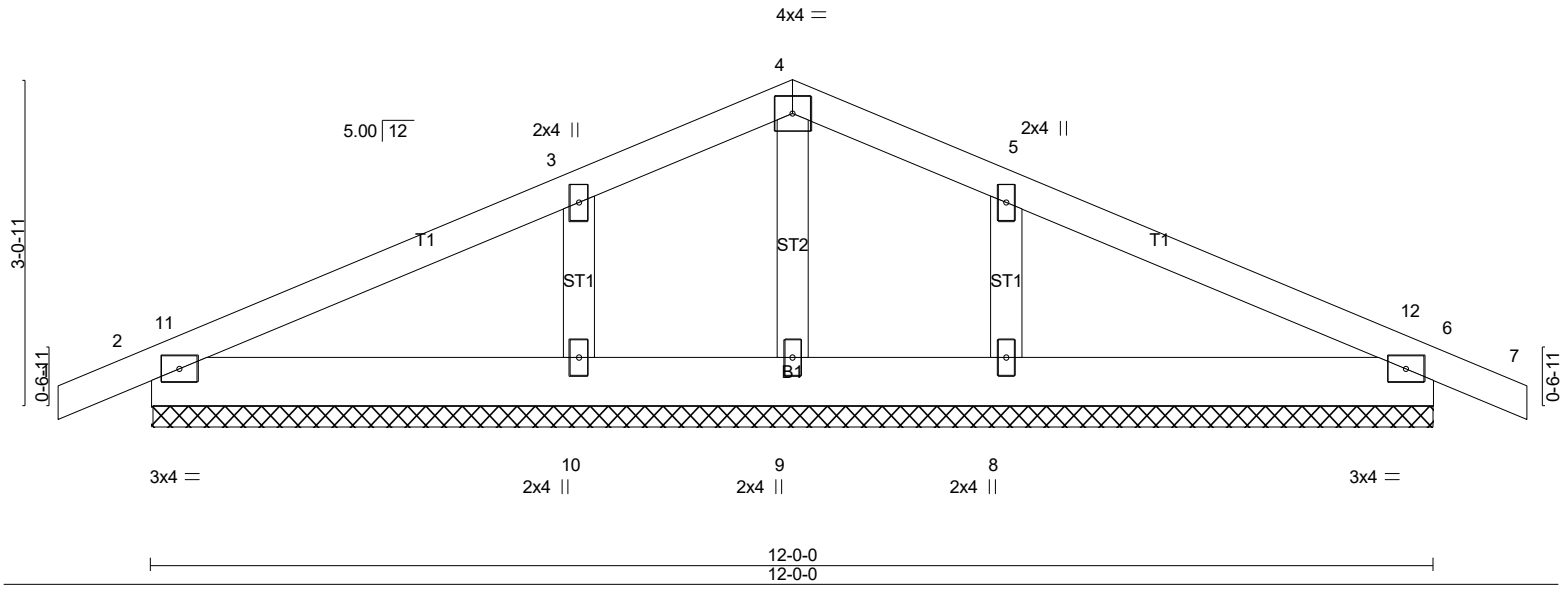

LOADING (psf)		SPACING-	2-0-0	CSI.		DEFL.	in	(loc)	l/defl	L/d	PLATES	GRIP
TCLL (roof)	20.0	Plate Grip DOL	1.15	TC	0.22	Vert(LL)	0.00	7	n/r	180	MT20	244/190
Snow (Pf)	20.0	Lumber DOL	1.15	BC	0.09	Vert(CT)	0.00	7	n/r	80		
TCDL	10.0	Rep Stress Incr	YES	WB	0.07	Horz(CT)	0.00	6	n/a	n/a		
BCLL	0.0 *	Code IRC2021/TPI2014		Matrix-SH							Weight: 58 lb	FT = 20%
BCDL	10.0											

LUMBER-
TOP CHORD 2x4 SP No.2
BOT CHORD 2x6 SP No.2
OTHERS 2x4 SP No.3

BRACING-
TOP CHORD Structural wood sheathing directly applied or 6-0-0 oc purlins.
BOT CHORD Rigid ceiling directly applied or 10-0-0 oc bracing.

MiTek recommends that Stabilizers and required cross bracing be installed during truss erection, in accordance with Stabilizer Installation guide.

REACTIONS. All bearings 12-0-0.
(lb) - Max Horz 2=-38(LC 15)
Max Uplift All uplift 100 lb or less at joint(s) 2, 6, 10, 8
Max Grav All reactions 250 lb or less at joint(s) 2, 6, 9 except 10=452(LC 21), 8=452(LC 22)

FORCES. (lb) - Max. Comp./Max. Ten. - All forces 250 (lb) or less except when shown.
WEBS 3-10=-317/163, 5-8=-317/163

NOTES- (13)
1) Unbalanced roof live loads have been considered for this design.
2) Wind: ASCE 7-16; Vult=120mph (3-second gust) Vasd=95mph; TCDL=5.0psf; BCDL=5.0psf; h=23ft; Cat. II; Exp B; Enclosed; MWFRS (envelope) gable end zone and C-C Corner(3E) -0-10-8 to 4-0-0, Corner(3R) 4-0-0 to 8-0-0, Corner(3E) 8-0-0 to 12-10-8 zone;C-C for members and forces & MWFRS for reactions shown; Lumber DOL=1.60 plate grip DOL=1.60
3) Truss designed for wind loads in the plane of the truss only. For studs exposed to wind (normal to the face), see Standard Industry Gable End Details as applicable, or consult qualified building designer as per ANSI/TPI 1.
4) TCLL: ASCE 7-16; Pr=20.0 psf (roof LL: Lum DOL=1.15 Plate DOL=1.15); Pf=20.0 psf (Lum DOL=1.15 Plate DOL=1.15); Is=1.0; Rough Cat B; Partially Exp.; Ce=1.0; Cs=1.00; Ct=1.10
5) Unbalanced snow loads have been considered for this design.
6) This truss has been designed for greater of min roof live load of 12.0 psf or 2.00 times flat roof load of 20.0 psf on overhangs non-concurrent with other live loads.
7) Gable requires continuous bottom chord bearing.
8) Gable studs spaced at 2-0-0 oc.
9) This truss has been designed for a 10.0 psf bottom chord live load nonconcurrent with any other live loads.
10) * This truss has been designed for a live load of 30.0psf on the bottom chord in all areas where a rectangle 3-6-0 tall by 1-0-0 wide will fit between the bottom chord and any other members.
11) Provide mechanical connection (by others) of truss to bearing plate capable of withstanding 100 lb uplift at joint(s) 2, 6, 10, 8.
12) Beveled plate or shim required to provide full bearing surface with truss chord at joint(s) 2.

LOAD CASE(S) Standard

NORTH CAROLINA PROFESSIONAL SEAL 28147 ENGINEER MARK K. MORRIS

1/10/2024

Job	Truss	Truss Type	Qty	Ply	LOT 47 PROVIDENCE CREEK | 239 WINDSWEPT WAY FUQUAY-VARINA, NC
24-0180-R01	SP02	Common	5	1	Job Reference (optional) **# 44079**

Run: 8.430 s Feb 12 2021 Print: 8.430 s Feb 12 2021 MiTek Industries, Inc. Fri Jan 12 17:58:57 2024 Page 1
ID:l8799bTYYbxotYa75q2Yk9yieyH-V?L23k9FLP3O6QF93nlRo3DuXVrn5XuKBJWb?lzw1IC

-0-10-8	6-0-0	12-0-0	12-10-8
0-10-8	6-0-0	6-0-0	0-10-8

Scale = 1:21.6

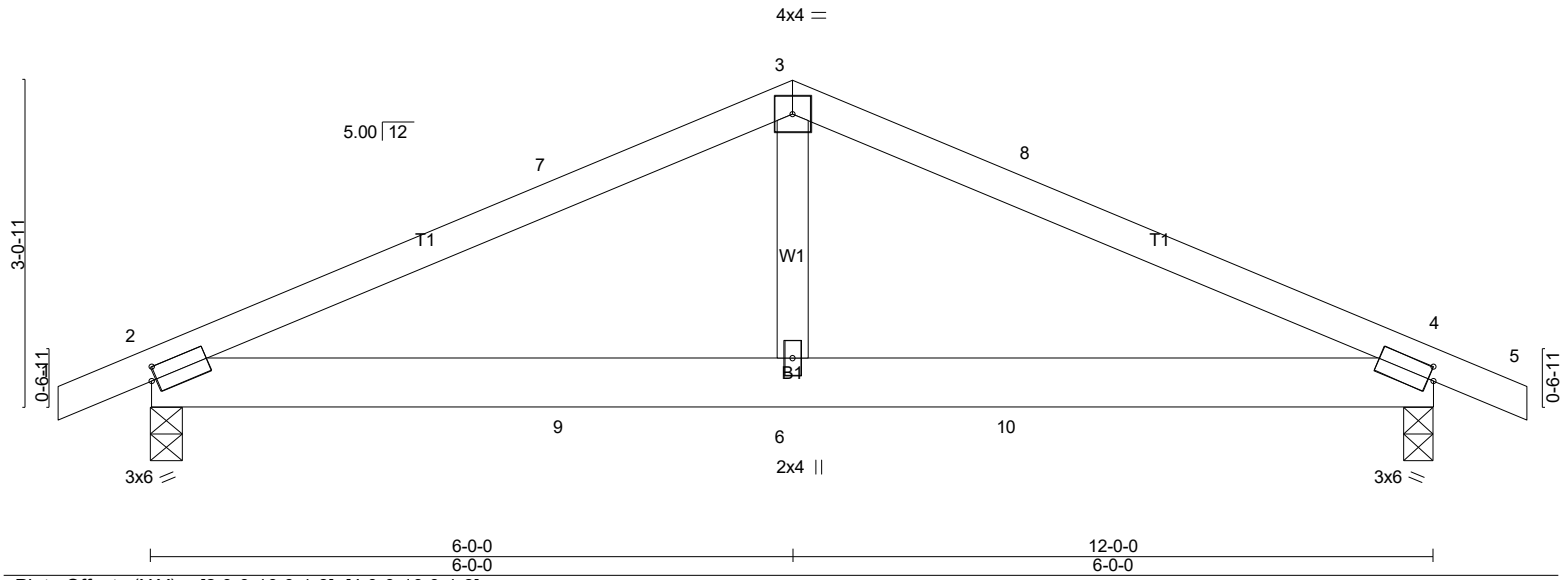

Plate Offsets (X,Y)-- [2:0-0-10,0-1-8], [4:0-0-10,0-1-8]

LOADING (psf)		**SPACING-** 2-0-0	**CSI.**	**DEFL.** in (loc) l/defl L/d	**PLATES**	**GRIP**
TCLL (roof)	20.0	Plate Grip DOL 1.15	TC 0.61	Vert(LL) -0.03 4-6 >999 240	MT20	244/190
Snow (Pf)	20.0	Lumber DOL 1.15	BC 0.37	Vert(CT) -0.05 4-6 >999 180		
TCDL	10.0	Rep Stress Incr YES	WB 0.11	Horz(CT) 0.01 4 n/a n/a		
BCLL	0.0 *	Code IRC2021/TPI2014	Matrix-SH		Weight: 54 lb	FT = 20%
BCDL	10.0					

LUMBER-
TOP CHORD 2x4 SP No.2
BOT CHORD 2x6 SP No.2
WEBS 2x4 SP No.3

BRACING-
TOP CHORD Structural wood sheathing directly applied or 5-4-12 oc purlins.
BOT CHORD Rigid ceiling directly applied or 9-6-0 oc bracing.

MiTek recommends that Stabilizers and required cross bracing be installed during truss erection, in accordance with Stabilizer Installation guide.

REACTIONS. (lb/size) 2=530/0-3-8 (min. 0-1-8), 4=530/0-3-8 (min. 0-1-8)
Max Horz 2=-38(LC 15)
Max Uplift2=-117(LC 10), 4=-117(LC 11)
Max Grav 2=624(LC 21), 4=624(LC 22)

FORCES. (lb) - Max. Comp./Max. Ten. - All forces 250 (lb) or less except when shown.
TOP CHORD 2-7=-775/690, 3-7=-633/701, 3-8=-633/701, 4-8=-775/690
BOT CHORD 2-9=-559/594, 6-9=-559/594, 6-10=-559/594, 4-10=-559/594
WEBS 3-6=-379/297

NOTES- (9)
1) Unbalanced roof live loads have been considered for this design.
2) Wind: ASCE 7-16; Vult=120mph (3-second gust) Vasd=95mph; TCDL=5.0psf; BCDL=5.0psf; h=23ft; Cat. II; Exp B; Enclosed; MWFRS (envelope) gable end zone and C-C Exterior(2E) -0-10-8 to 3-11-2, Exterior(2R) 3-11-2 to 8-0-14, Exterior(2E) 8-0-14 to 12-10-8 zone; porch left and right exposed;C-C for members and forces & MWFRS for reactions shown; Lumber DOL=1.60 plate grip DOL=1.60
3) TCLL: ASCE 7-16; Pr=20.0 psf (roof LL: Lum DOL=1.15 Plate DOL=1.15); Pf=20.0 psf (Lum DOL=1.15 Plate DOL=1.15); Is=1.0; Rough Cat B; Partially Exp.; Ce=1.0; Cs=1.00; Ct=1.10
4) Unbalanced snow loads have been considered for this design.
5) This truss has been designed for greater of min roof live load of 12.0 psf or 2.00 times flat roof load of 20.0 psf on overhangs non-concurrent with other live loads.
6) This truss has been designed for a 10.0 psf bottom chord live load nonconcurrent with any other live loads.
7) * This truss has been designed for a live load of 30.0psf on the bottom chord in all areas where a rectangle 3-6-0 tall by 1-0-0 wide will fit between the bottom chord and any other members.
8) Provide mechanical connection (by others) of truss to bearing plate capable of withstanding 100 lb uplift at joint(s) except (jt=lb) 2=117, 4=117.

LOAD CASE(S) Standard

NORTH CAROLINA PROFESSIONAL SEAL 28147 ENGINEER MARK K. MORRIS

1/10/2024

Job	Truss	Truss Type	Qty	Ply	LOT 47 PROVIDENCE CREEK | 239 WINDSWEPT WAY FUQUAY-VARINA, NC
24-0180-R01	V01	Valley	2	1	Job Reference (optional) **# 44079**

Run: 8.430 s Feb 12 2021 Print: 8.430 s Feb 12 2021 MiTek Industries, Inc. Fri Jan 12 17:58:57 2024 Page 1
ID:P9Fbno1x1NcL_1BS5_FittyrTtl-V?L23k9FLP3O6QF93nlRo3D?0Vv65YfKBJWb?lzw1IC

Scale = 1:11.1

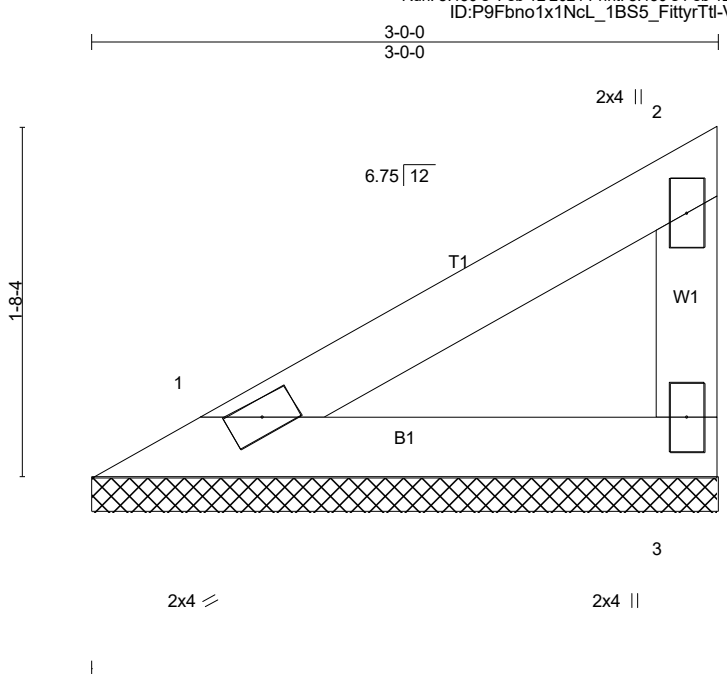

LOADING (psf)		SPACING-	2-0-0	CSI.		DEFL.	in	(loc)	l/defl	L/d	PLATES	GRIP
TCLL (roof)	20.0	Plate Grip DOL	1.15	TC	0.13	Vert(LL)	n/a	-	n/a	999	MT20	244/190
Snow (Pf)	20.0	Lumber DOL	1.15	BC	0.10	Vert(CT)	n/a	-	n/a	999		
TCDL	10.0	Rep Stress Incr	YES	WB	0.00	Horz(CT)	0.00	3	n/a	n/a		
BCLL	0.0 *	Code IRC2021/TPI2014		Matrix-P							Weight: 10 lb	FT = 20%
BCDL	10.0											

LUMBER-
TOP CHORD 2x4 SP No.2
BOT CHORD 2x4 SP No.3
WEBS 2x4 SP No.3

BRACING-
TOP CHORD Structural wood sheathing directly applied or 3-0-0 oc purlins, except end verticals.
BOT CHORD Rigid ceiling directly applied or 10-0-0 oc bracing.

MiTek recommends that Stabilizers and required cross bracing be installed during truss erection, in accordance with Stabilizer Installation guide.

REACTIONS. (lb/size) 1=92/3-0-0 (min. 0-1-8), 3=92/3-0-0 (min. 0-1-8)
Max Horz 1=44(LC 11)
Max Uplift1=-10(LC 14), 3=-23(LC 14)
Max Grav 1=120(LC 20), 3=120(LC 20)

FORCES. (lb) - Max. Comp./Max. Ten. - All forces 250 (lb) or less except when shown.

NOTES- (8-11)
1) Wind: ASCE 7-16; Vult=120mph (3-second gust) Vasd=95mph; TCDL=5.0psf; BCDL=5.0psf; h=35ft; Cat. II; Exp B; Enclosed; MWFRS (envelope) gable end zone and C-C Exterior(2E) zone; cantilever left and right exposed ; end vertical left and right exposed;C-C for members and forces & MWFRS for reactions shown; Lumber DOL=1.60 plate grip DOL=1.60
2) TCLL: ASCE 7-16; Pr=20.0 psf (roof LL: Lum DOL=1.15 Plate DOL=1.15); Pf=20.0 psf (Lum DOL=1.15 Plate DOL=1.15); Is=1.0; Rough Cat B; Partially Exp.; Ce=1.0; Cs=1.00; Ct=1.10
3) Unbalanced snow loads have been considered for this design.
4) Gable requires continuous bottom chord bearing.
5) This truss has been designed for a 10.0 psf bottom chord live load nonconcurrent with any other live loads.
6) * This truss has been designed for a live load of 30.0psf on the bottom chord in all areas where a rectangle 3-6-0 tall by 1-0-0 wide will fit between the bottom chord and any other members.
7) Provide mechanical connection (by others) of truss to bearing plate capable of withstanding 100 lb uplift at joint(s) 1, 3.
8) Graphical bracing representation does not depict the size, type or the orientation of the brace on the member. Symbol only indicates that the member must be braced.
9) Bearing symbols are only graphical representations of a possible bearing condition. Bearing symbols are not considered in the structural design of the truss to support the loads indicated.
10) Web bracing shown is for lateral support of individual web members only. Refer to BCSI - Guide to Good Practice for Handling, Installing, Restraining & Bracing of Metal Plate Connected Wood Trusses for additional bracing guidelines, including diagonal bracing.
11) SEE BCSI-B3 SUMMARY SHEET- PERMANENT RESTRAING/BRACING OF CHORDS & WEB MEMBERS FOR RECOMMENDED MINIMUM BRACING REQUIREMENTS OF TOP CHORD, BOTTOM CHORD, AND WEB PLANES. IN ADDITION TO THESE MINIMUM GUIDELINES, ALWAYS CONSULT THE PROJECT ARCHITECT OR ENGINEER FOR ADDITIONAL BRACING CONSIDERATIONS.

LOAD CASE(S) Standard

NORTH CAROLINA PROFESSIONAL SEAL 28147 ENGINEER MARK K. MORRIS

1/10/2024