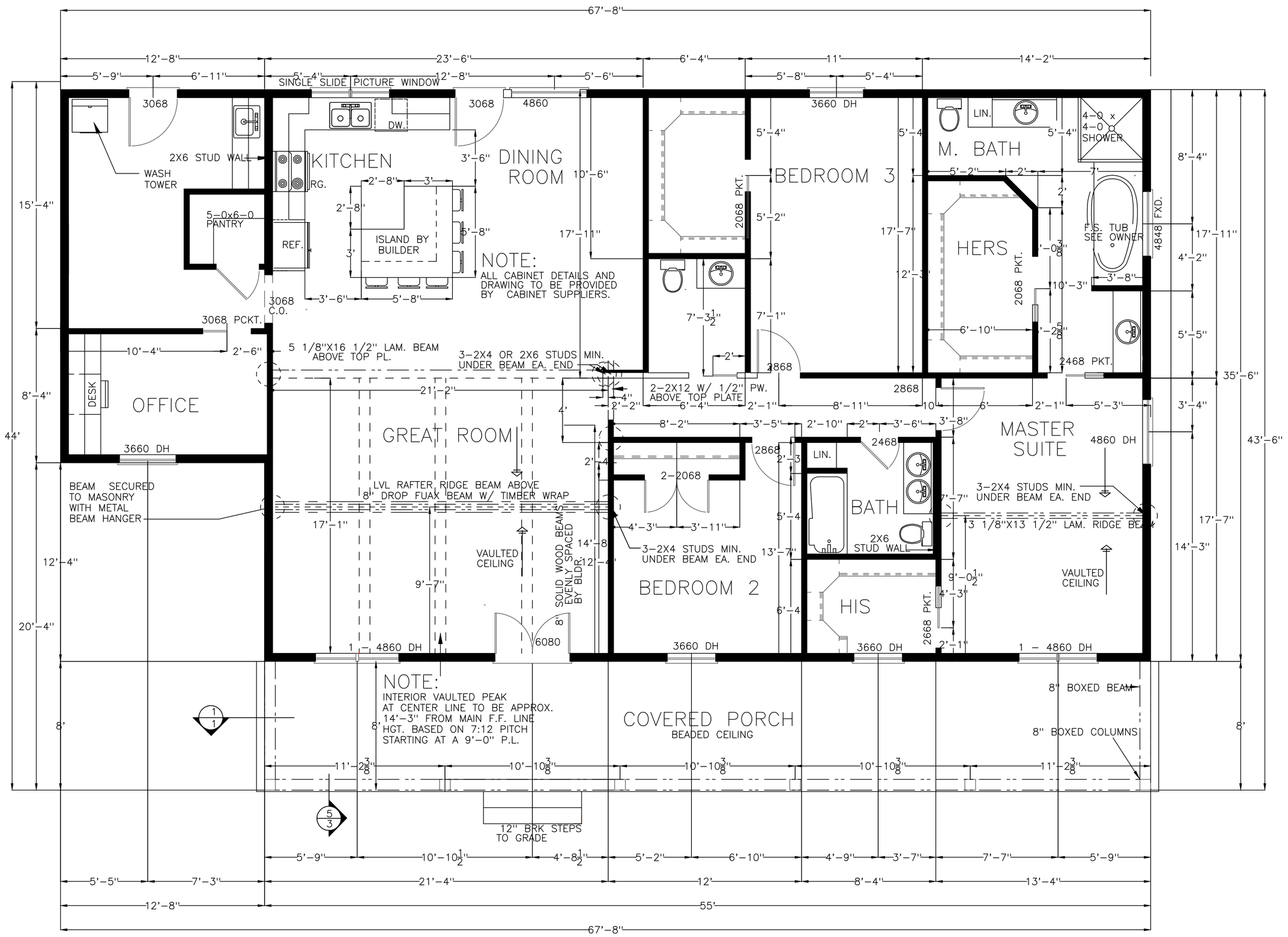

FLOOR PLAN NOTES:

1. ALL STRUCTURAL INFORMATION SHOWN FOR REFERENCE PURPOSES ONLY. CONTRACTOR SHALL HAVE LICENSED STRUCTURAL ENGINEER REVIEW AND DESIGN ALL STRUCTURAL ELEMENTS SUCH AS ALL FRAMING WALLS, BEAMS, CONNECTIONS, HEADERS, JOISTS AND RAFTERS.

2. ALL DIMENSIONS ARE FROM FACE OF STUD TO FACE OF STUD UNLESS NOTED OTHERWISE.

3. WINDOW SIZES INDICATED ON PLANS ARE NOTED BY APPROXIMATE ROUGH OPENING SIZE, REFER TO PLANS AND EXTERIOR ELEVATIONS FOR WINDOW TYPES.

4. DO NOT SCALE DRAWINGS, FOLLOW DIMENSIONS ONLY.

5. CONTRACTOR SHALL FIELD VERIFY ALL CABINET DIMENSIONS BEFORE FABRICATION.

6. BEDROOM WINDOWS SHALL HAVE A MINIMUM NET CLEAR OPENING OF 5.7 SQ.FT., A MINIMUM NET CLEAR OPENABLE WIDTH OF 20", A MINIMUM NET CLEAR OPENABLE HEIGHT OF 24" AND HAVE A MAXIMUM FINISH SILL HEIGHT OF 43" FROM FINISH FLOOR.

7. ALL GLASS LOCATED WITHIN 18" OF FLOOR, 12" OF A DOOR OR LOCATED WITHIN 60" OF FLOOR AT BATHTUBS, WHIRLPOOLS, SHOWERS, SAUNAS, STEAM ROOMS OR HOT TUBS SHALL BE TEMPERED.

8. PROVIDE COMBUSTION AIR VENTS, WITH SCREEN AND BACK DAMPER, FOR FIREPLACES, WOOD STOVES AND ANY APPLIANCE WITH AN OPEN FLAME.

9. BATHROOMS AND UTILITY ROOMS SHALL BE VENTED TO THE OUTSIDE WITH A MINIMUM OF A 90 CFM FAN. RANGE HOODS SHALL ALSO BE VENTED TO OUTSIDE.

10. ATTIC HVAC UNITS SHALL BE LOCATED WITHIN 20' OF ITS SERVICE OPENING. RETURN AIR GRILLES SHALL NOT BE LOCATED WITHIN 10 FEET OF A GAS FIRED APPLIANCE.

11. ALL WALLS AND CEILINGS IN GARAGE AND GARAGE STORAGE AREAS TO HAVE 5/8" TYPE-X GYP. BOARD W/ 1-HOUR FIRE RATING. ALL EXT. DOORS IN GARAGE TO BE METAL OR SOLID CORE DOORS INCLUDING DOORS ENTERING HEAT/COOLED PORTION OF RESIDENCE.

12. ALL INTERIOR WALLS SHALL BE COVERED WITH 1/2" GYPSUM BOARD, WITH METAL CORNER REINFORCING, TAPE FLOAT AND SAND. (3 COATS) USE 5/8" GYPSUM BOARD ON CEILINGS WHEN SUPPORTING MEMBERS ARE 24" O.C. OR GREATER. USE 1/2" GYPSUM BOARD ON CEILING MEMBERS LESS THAN 24" O.C.

13. ALL BATH AND TOILET AREA WALLS AND CEILINGS SHALL HAVE WATER RESISTANT GYPSUM BOARD.

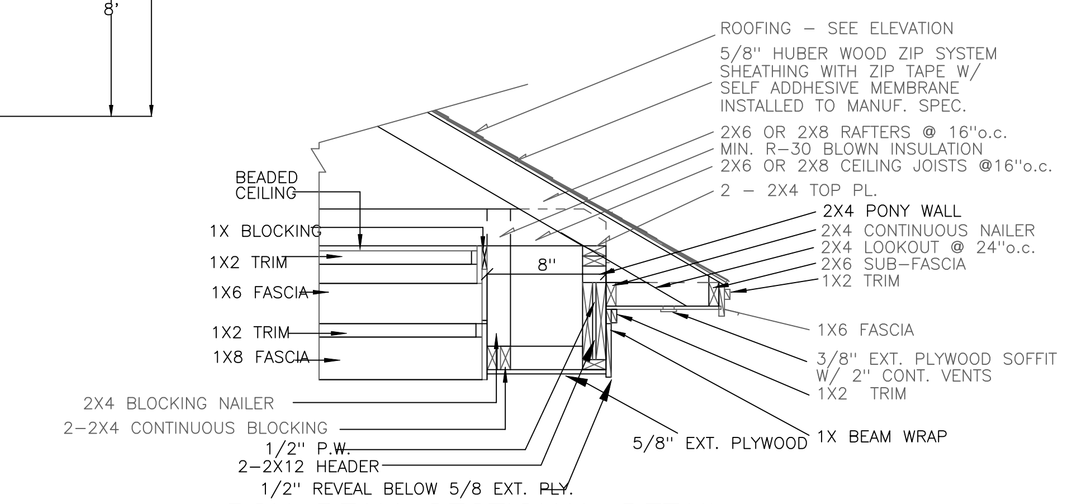

1 BOX BEAM SECTIONAL DETAIL
3/4" = 1'-0"

FLOOR PLAN SPECIFICATIONS

HEAT/COOLED:	2246 SQ. FT.
PORCHES:	465 SQ. FT.
TOTAL:	2711 SQ. FT.

NOTE:

1.- ALL CEILINGS TO BE 9' UNLESS NOTED.
2.- BUILDER TO APPROVE & VERIFY ALL PLANS BEFORE CONSTRUCTION.
3.- VERIFY ALL PLANS W/ LOCAL BUILDING CODES.
4.- HVAC & W.H. TO BE IN ATTIC UNLESS OTHERWISE NOTED.
5.- PROVIDE SHUT-OFF VALVE FOR ALL GAS APPLIANCES. REFERENCE IRC SECTION G2419
6.- ALL EXTERIOR WALL TO BE OF 2X6 CONSTRUCTION WITH STUDS AT 16" O.C. UNLESS OTHERWISE NOTED.
7.- ALL GLASS LOCATED WITHIN 18" OF FLOOR, 12" OF A DOOR OR LOCATED WITHIN 60" OF FLOOR AT BATHTUBS, WHIRLPOOLS, SHOWERS, SAUNAS, STEAM ROOMS OR HOT TUBS SHALL BE TEMPERED TO COMPLY WITH IRC SECTION R308.4.8
8.- NARROW WALL SHEARWALLS SHALL BE CONSTRUCTED IN ACCORDANCE WITH 2006 IRC SECTION R602.10 BRACED WALL LINES. SAID SHEARWALLS MAY ALSO BE CONTRUCTED USING SIMPSON STRONG TIE PRODUCTS. REFER TO SIMPSON STRONG TIE FOR "STRONGWALL" APPLICATIONS. THIS MAY BE REQUIRED TO MEET ANY CODE REQUIREMENTS FOR NARROW WALLS NEXT TO GARAGE DOORS. CORRECT PRODUCT SELECTION IS SENSITVE TO BOTH SEISMIC AND WIND ZONE PARAMETERS AND SHOULD BE VERIFIED LOCALLY PRIOR TO CONSTRUCTION. ALSO DUE TO THE NATURE OF THE SIMPSON INSTALLATION PROCESS, THE DECISION TO USE THE "STRONG-WALL" SYSTEM SHALL BE MADE PRIOR TO FOUNDATION CONCRETE PLACE-MENT. SINCE THESE PLANS ARE NOT SITE OR LOCATION SPECIFIC THE MECHANICS TO MEET CODE REQUIREMENTS SHALL BE VERIFIED BY QUAL-IFIED PERSON(S) AT THE LOCAL LEVEL PRIOR TO CONSTRUCTION. SEE DETAILS 1 & 2 ON PAGE SSW2, SHEARWALL "GARAGE WALL OPTIONS".

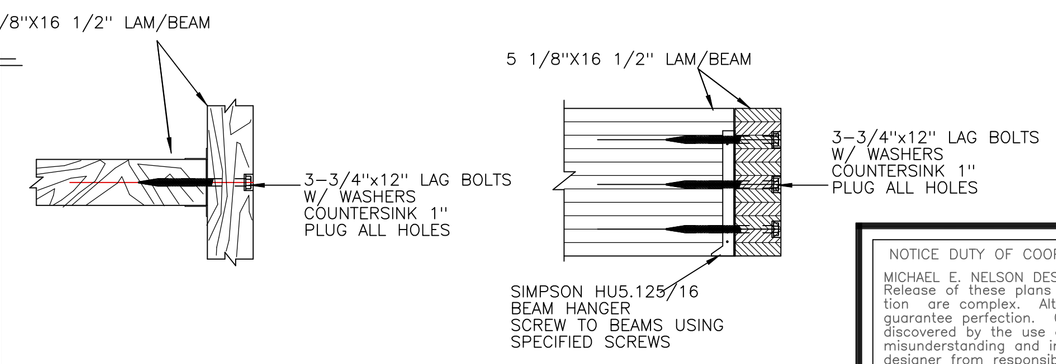

2 5-1/8" LAM BEAM T-HANGER DETAIL
1" = 1'-0"

NOTICE DUTY OF COOPERATION © 2022 Michael E. Nelson Designs, LLC.
Reproduction of these plans, in any form, without the written consent of the Designer is prohibited.
MICHAEL E. NELSON DESIGNS, LLC or Michael E. Nelson assumes no liability for any HOME constructed from this plan. Release of these plans contemplates further cooperation among the owner, his contractor and the designer. Design and construction are complex. Although the designer and his consultants performed their services with due care and diligence, they cannot guarantee perfection. Communication is imperfect and every contingency cannot be anticipated. Any ambiguity or discrepancy discovered by the use of these plans shall be reported immediately to the designer. Failure to notify the designer compounds misunderstanding and increases construction costs. A failure to cooperate by a simple notice to the designer shall relieve the designer from responsibility for all consequences. Changes made from the plans without the consent of the designer are unauthorized and shall relieve the designer of responsibility for all consequences arriving out of such changes. Only qualified Designer, Architect, Contractor, or Structural Engineer should attempt to modify any portion of this design.
Written dimensions on these drawings shall have precedence over scaled dimensions; contractors shall verify and be responsible for all dimensions and conditions on the job. This office must be notified of any variations from the dimensions and conditions shown by these drawings. Shop details must be submitted to this office for approval before proceeding with fabrication or construction.

MICHAEL E. NELSON
P.B.D. Cert. No. AR-10

REVISIONS	BY
	24x36

MAIN FLOOR PLAN / NOTES / 2X6 EXT.
MEN5413
SUNBELT PLACE

NATIONALLY PUBLISHED
5210 STADIUM BLVD
SUITE A
JONESBORO, AR 72404
870.933.5777
FAX 870.972.9296
Member
AIBD & CPBD
MICHAEL@MENDESIGN.COM
800.590.2423
A CUSTOM DESIGN & PLAN MODIFICATION COMPANY

DATE	10/10/2022
SCALE	1/4" = 1'-0"
BUILDER	
JOB	MEN5413
DRAWN BY	ML