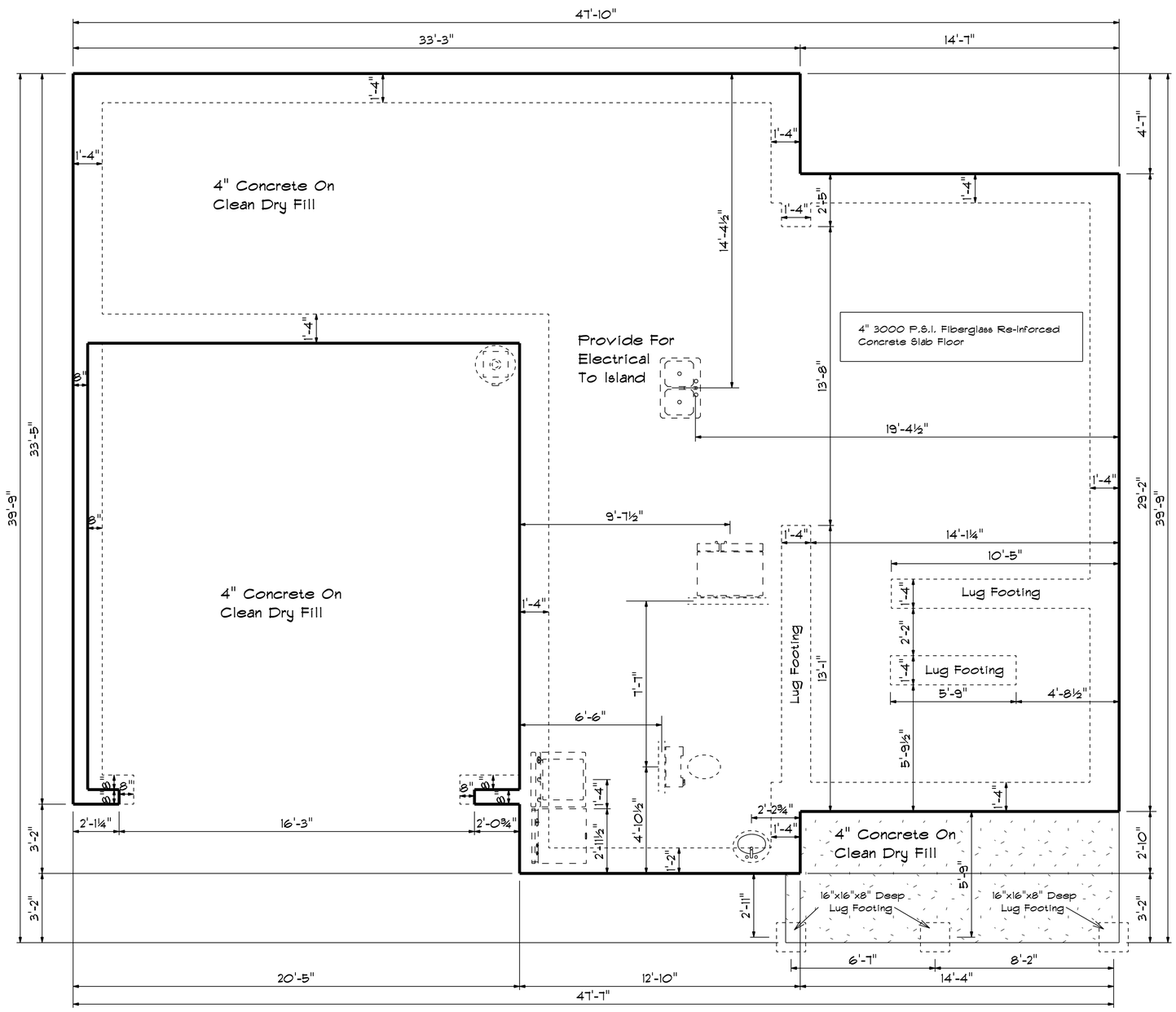

Foundation Plan

Scale: 1/4"= 1'-0"

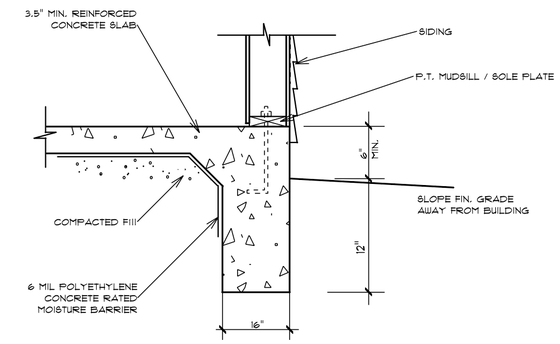

TURN-DOWN
FOOTING DETAIL

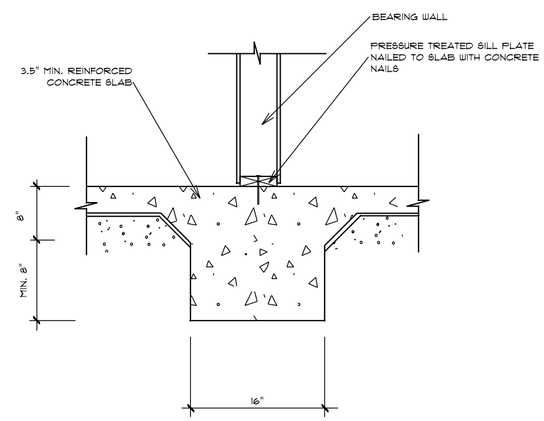

INTEGRAL SLAB FOOTING
DETAIL AT BEARING WALL

Bass Designs
2727 Chimney Pt.
Linden, N.C. 28356
910-263-0405

DATE: 4/28/2023
REVISED
DRAWING#

SCALE: 1/4"
DRAWN BY
APPROVED

The Almirante