WWW.SOUTHLANDLOGHOMES.COM

SOUTHLAND
LOG HOMES

GARY PIERCE

THANK YOU FOR PURCHASING A QUALITY LOG HOME PACKAGE FROM SOUTHLAND LOG HOMES. THIS IS YOUR FINAL SET OF PLANS. PLEASE READ ALL INFORMATION PROVIDED TO YOU BY SOUTHLAND LOG HOMES BEFORE BEGINNING CONSTRUCTION. OUR KNOWLEDGABLE STAFF WILL BE AVAILABLE TO ASSIST YOU WITH ANY QUESTIONS YOU MAY HAVE DURING THE BUILDING PROCESS.

Final Plan Index

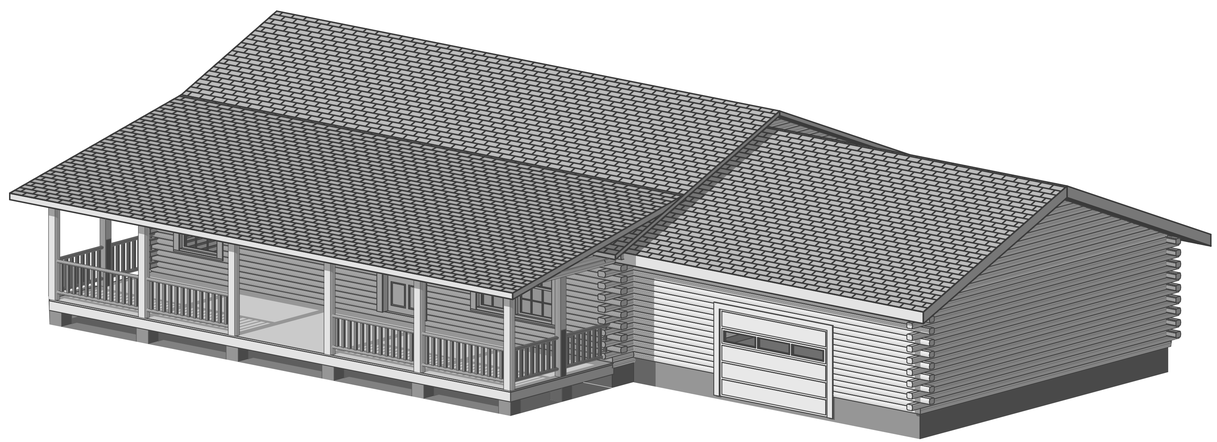

PO BOX 1668, HIGHWAY 176 @ 1-26
IRMO, SOUTH CAROLINA 29063-1668
(803) 781- 5100 (LOCAL)
1-800-845-3555 (USA)

DO NOT BEGIN CONSTRUCTION IF:

YOUR AREA REQUIRES SEALED PLANS FROM AN ENGINEER. PLEASE WAIT UNTIL THE SEALED PLANS ARRIVE BEFORE PROCEEDING WITH YOUR PROJECT.

GENERAL CONTRACTOR NOTES:

1.) CONTRACTOR TO VERIFY ALL DIMENSIONS BEFORE BEGINNING CONSTRUCTION.

2.) REFER TO SOUTHLAND LOG HOMES' CONSTRUCTION MANUAL FOR FURTHER INSTRUCTIONS.

IMPORTANT NOTES
READ CAREFULLY
FINAL PLANS

WARNING!

This Southland Log Home package has been designed according to the purchase contract and applicable building codes. It must be constructed in accordance with these plans. All unauthorized deviations become the responsibility of the person who built in unsafe condition. A structural engineer, violates building codes and will void the warranty on this product.

LOG STYLE & PROFILE
ROUND / FLAT

SYP
R/F

6x8 STOCKADE SYP

FINAL PLANS

Contractor is responsible to field verify all dimensions on your job site.

Some areas or local building departments may require sealed construction plans and/or engineered floor/roof/wall systems. Purchaser is responsible to determine if sealed plans are necessary and must notify Seller in writing at least thirty-five (35) days prior to delivery date. Purchaser is responsible for all costs associated with sealed plans required after the delivery date. Change by the engineer who seals the plans. If your plans require "sealing" DO NOT START CONSTRUCTION UNTIL you have received your "sealed" plans from the engineer.)

GARY PIERCE

DELIVERY COUNTY: HARNETT
DELIVERY STATE: NC
SITE ADDRESS: 558 LOOP ROAD
BUNNLEVEL, NC 38323

SOUTHLAND LOG HOMES
800-845-3555 USA
803-781-5128 FAX
7531 BROAD RIVER ROAD
P.O. BOX 1668 IRMO, SC 29063-1668

MODEL: LEE III

DESIGNER	CUTSHEETS
LBP	- - -
CHECKED BY: PM	CHECKED BY: - - -

PLAN DATE: 08-23-23

DELIVERY DATE: 02-09-24

2301661
PROJECT NUMBER

A.1
SHEET NUMBER

Log Homes Council of the National Association of Home Builders

Appraising Log Homes

An overview of the log home industry and log home appraisals

Revisions by the Log Homes Council, 2008
Originally Published by: Jim Cooper

Introduction

While log homes appeal to many home buyers, determining their value presents a challenge for appraisers and lenders. Log homes comprise a specialized segment of the housing market, making valuation and comparisons with other types of housing difficult. Because many appraisers and lenders have limited experience with log construction, they turn to comparable value properties to establish value. But a comparable value approach can be misleading unless the appraiser understands how to select a comparable.

In cases where the appraiser or lender is uncertain, the final appraisal may be over conservative. As a result, the potential home buyer may be unable to meet the mortgage or construction loan requirements. Not only do homeowners lose an opportunity to own the type of house they desire, but the lender also loses a potential loan, the log manufacturer loses potential sales, and the local construction industry loses job and material sale opportunities.

This information is designed to familiarize you, the appraiser or lender, with log home styles, construction and cost variables, market trends and points of comparison with other types of housing. It is designed to help you accurately establish the value of log homes.

Home Market

Many people are drawn to log homes, and the appeal of log homes has fueled the development of a modern log home industry. Over 400 manufacturers, ranging from small sawmill operations to sophisticated, full-service housing companies, serve this growing market.

Log Homes have been a part of America's housing heritage since colonial days. Abundant forests and the availability of large trees made log shelters an easy solution to the housing demand. Because early log homes or cabins were often used as temporary structures or interim residences, they were often hastily constructed, poorly sealed and ill-maintained.

Working with minimal tools and primitive knowledge, almost anyone could build serviceable shelter that would last the few years necessary until a "proper" house could be built. Later, from the vantage point of that "proper" house, many who started life in a log cabin looked back with nostalgia on the rustic structure.

Today, few people start life in a log home (although there are probably more today who can claim a log home heritage than at any time in the last few generations). The appeal of logs has become one of nostalgia for simpler times, a more "natural" lifestyle, and perhaps breathing room after a day spent battling modern technology. Log home living today is not just about housing, it's about lifestyle. This has important implications for valuing the structure and its marketability.

The log home market of today can trace its beginnings to the late 1960s or early 1970s when a "back-to- the - land" ethic inspired many to look toward self-sufficient lifestyles. Until then, log cabins occupied the niche of "vacation homes," seasonal dwellings, constructed inexpensively with only basic amenities. Suddenly, more people were looking for a permanent residence they could construct or at least participate in the construction themselves. As log homes shifted from seasonal to permanent dwellings, they increased in size and were filled with the same amenities as conventional homes.

Several characteristics of log home enthusiasts contribute to the overall high quality and value of log homes. First, log homes are usually built as someone's dream home. Second, log home shoppers usually spend considerable time researching the product before they buy. It is not uncommon for a log home purchaser to spend several years gathering large amounts of information before purchasing a home. Third, occasionally log homeowners become involved in supervising or participating in construction of their home. The homeowner is sometimes responsible for the actual design of the home. As a result, the quality of the home may reflect the owner's style, management, or construction skills (or lack thereof). Since most homeowners take great pride in their homes and spend considerable time preparing to build, quality tends to be higher than in conventionally built homes.

A final characteristic of log home enthusiasts is their dedication to owning a log home. Most are not interested in another type of housing and will purchase a conventional home only if circumstances prevent them from owning a log structure. They are prepared to pay the same or more for their log home dream. A study by the National Association of Home Builders confirmed this by finding no difference in resale value of log homes when compared to other types of housing.

Appraising Log Homes

Appraisers and lenders face two types of log home appraisal: (1) appraisal of a home to be constructed, (2) appraisal of an existing home. Appraising a log home guided only by blueprints is difficult, especially for someone not familiar with log construction. Existing log homes are easier to appraise because there is a tangible product to evaluate. Other variables, however, are introduced, such as quality of construction.

The comparable value approach is made difficult because of wide variation in style and design. Also, some of the features in a log home appeal to log home buyers, but not necessarily the mass home buying market. These don't lower the value of the home (they may in fact increase it), however it can simply change its market position. Not everyone likes the rough-sawn look of certain types of log homes, but those that do are prepared to pay as much, or more, for a conventional home of similar design.

Traditionally, appraisers and lenders base comparisons on homes of similar construction and design. This often made it impossible to appraise a log home simply because no similar home existed in the market area. Fannie Mae addressed this problem in Announcement 9-128 which stated, "We have no requirement that one or more of the comparable sales must be of the same design and appeal as the property being appraised. If recent comparable sales of the same design and appeal as the property that is being appraised are not available, but the appraiser is able to determine sound adjustments for the differences between the comparable that are available and subject property demonstrate the marketability of the property-based on older comparable sales, comparable sales in competing neighborhoods, the existence of similar properties in the market area, and other reliable market data-the mortgage is acceptable to Fannie Mae."

Fannie Mae's guideline leaves more flexibility in choosing a comparable, but the appraiser or lender is still left with the challenge of choosing realistic comps. Because log homes are usually sold and delivered as packages, there has been a natural tendency to label them as a type of prefabricated home for which cost comparison data is more readily available. There is some prefabrication involved in log home construction, including pre-cutting and pre- drilling logs. As with custom conventional construction, the bulk of the log home materials must be assembled on the site. However, the uniqueness of log homes can often call for skills beyond those of conventional carpentry, making a finished log home truly a work of custom craftsmanship. Given the intricacies in construction, a log home can be compared to any custom home.

When comparing log homes with conventional "stick built" homes, it is important to recognize that log homes are usually highly customized both in design and materials. They often include features considered upgrades in other types of housing.

These include:
- Open beamed ceilings
- Cathedral ceilings
- Solid wood wall coverings
- Solid wood siding
- Custom wood stairs and railings
- Custom wood trim
- Custom or solid wood interior doors
- Solid wood floors
- Custom wood cabinetry
- Masonry fireplaces
- Energy efficient windows
- Cedar shake, metal, or slate roofs
- Set on large, often secluded lots
- Porches and decks

When comparing a log home to a similar sized custom conventional home that does not include these features, the value contributed to a conventional home can be added to give a more realistic picture of the value of the log home.

Because of their custom features, log homes are often more expensive to construct than basic tract-built stick homes. This can be seen by comparing the construction process as in the following table:

Stage	Conventional	Log
Excavation	Typical	Typical
Foundation	Typical	Typical
Structural shell	Typical	Higher labor costs for log erection; timbered roofs
Interior framing	Typical	Higher cost due to construction details required in framing to accommodate log shape and settling
Mechanical systems	Typical	Typical to higher cost , depending on system
Roofing	Typical	Typical to higher cost ,depending on owner preference
Trim	Typical	Typical to higher cost if custom trim is used; custom cabinetry, stairs and rails common
Painting, varnishing	Typical	Typical to higher, usually more stained and varnished areas, may be done by homeowner
Exterior	Typical	Higher cost to trim and seal because of logs

Types of Log Homes

Hand -crafted
These are one-of-a- kind homes built by a log home specialist known as a handcrafter. Working with raw logs, which he has either purchased or cut himself, the handcrafter prepares logs individually using powered or manually operated hand tools. Corner joints are measured, marked, and cut individually. Logs are cut to length and numbered.

Usually, the shell of the house is pre-assembled without seals or fasteners at the hand crafter's log yard, individual pieces are numbered, and the shell disassembled for shipment to its destination. There it is re-assembled and finished.

Handcrafted homes are usually distinguished by the large logs used and the chinking (1" or larger bands of white or colored grout) that fills and seals spaces between logs.

Handcrafters often include other custom features such as hand-cut timber framed trusses, stairs, and railings. Sometimes hand crafters embellish timber components with decorative carving.

Hand crafters may be responsible for erection of the log structure only or they may finish the house entirely. The quality of the structure is dependent on the skills of the hand crafter and the design chosen by the home buyer.

The cost of a hand-crafted log home ranges from moderately to substantially more expensive when compared to a conventionally framed home. A great deal more hand work, requiring time and specialized skill, goes into the construction of a handcrafted log house.
M anufactured or Machine Milled
Manufactured log homes are based on logs that have been shaped with milling machinery. The manufacturing process varies from simply removing bark to milling the log into a variety of profiles that may include interlocking tongues and grooves, corner notches and slots from splines. Some manufacturing processes include manual operations like handcrafting.

Log home manufacturers sell their product as "packages" or "kits." Minimally, a kit consists of logs, fasteners and sealants that form the log wall system. Many manufacturers also include other components of the house structure, including windows, doors, shingles, dimensional lumber, porch and deck material, stairs and trim. Often manufacturers offer their packages in several levels of completeness.

Log home manufacturers are often further distinguished according to whether they offer pre-cut or random length logs in their packages. Pre-cut logs are cut to length and numbered according to a master "cut sheet" that is used to guide assembly of the wall.
system. Random length logs are supplied in bundles that have not been cut to a specific length. Measuring and cutting is done by the carpenters or erection crew on the job site.

Log Systems

Corner Systems
Corner systems vary in complexity and many manufacturers offer more than one style of corner. Corner type can affect final house cost by affecting both the labor and time required to construct log walls. Subtle variations in corners result from different manufacturers' methods of dealing with fastening and sealing corners. However, most log home corners fall into four basic categories.

Butt & Pass
Butt & Pass corners are the simplest and most widely used in log homes. Using this system, one log of a corner pair butts against the other log of the pair. The second log usually passes beyond the corner to overhang outside the corner of the house. Butt & pass logs alternate in successive log courses, creating a distinct pattern of alternating overhanging logs on the corner. The pattern is a desirable feature of many log home buyers because it instantly identifies the house as a log home.

Butt & pass corners are often modified to create a stronger or better sealed joint. For example, notches may be cut in the pass log into which fits a tongue cut in the end of the butt log (mortis & tennon). While these may increase strength or weather tightness of the corner, a basic butt and pass joint is still strong enough. and can be made tight enough to handle the stresses imposed by the log system.

Dovetail

Dovetail joints require precision cutting machinery or a skilled handcrafter. The joints are designed so that settling and normal log movement act to strengthen rather than loosen the joint. In a dovetail, the two logs that form the corners are each notched in a modified "V." The "V" holds the corner together and any movement in the log or settling tends to drive the logs tighter together. Dovetail joints are characteristic of many handcrafted houses and are reminiscent of the early log homes built throughout the Appalachian Mountains.

Saddle -notch
Saddle notches often secure corners in a variety of log profiles. The basic joint is made by cutting a notch into one or both logs of a corner pair. The log fits into the notch in the other or, if both logs are notched, the two are interlocked. Like dovetails, saddle notches are cut using precision machinery or in the case of handcrafters, by hand. Saddle notches simplify corner construction and may reduce labor costs. Like butt and pass corners, saddle notched corners produce a distinctive appearance. A fully notched corner can have solid, rather than alternating overhangs on both sides of each corner. Overhangs may be cut in decorative patterns.

Post & Sill
Post & sill construction is distinguished by the presence of vertical posts at corners and periodically along walls. Not just a corner system, it represents a different method of log wall assembly. Usually, posts are slotted allowing insertion of a tongue milled into the end of the log. As a result, post and
sill houses are like timber frame homes. As logs settle, they simply slide down the slots in the posts. The frame does not settle.

Log Type

A variety of wood species are used for the logs that make up a log home. Manufacturers and prospective log homeowners invest much energy in defending one species or another. In fact, the preservatives, modern sealants, and insect repellents that are part of modern log homes make differences in wood species less significant to the structural integrity of the house. Specific woods, however, have characteristics that may appeal to a buyer or offer a particular look. For example, oak has a very rich grain that appeals to some people; cedar offers a distinctive color and aroma that attracts others.

Selection of wood species affects the finished house costs. Pine and oak are usually less expensive than cedar. Cypress also carries a higher price tag.

In addition to solid log wall systems, an increasing number of manufacturers are offering "super insulated" log systems. These originated as a means of meeting stringent energy code requirements in some areas. Super insulated systems consist of half logs or log siding covering a core of insulated framing or structural insulated panels, both inside and out. The appearance is identical to a solid log house with manufacturers even including full log corners to maintain a traditional log home "look." Interior construction is simplified because such homes do not require special features to control log settling.

These homes offer a broader market appeal by combining many of the most desirable features of a log home with some of the positive features of a conventional home.

Because they use large timbers and tongue and groove decking and require more labor to construct, built- up roofs can cost several times as much as conventionally framed roofs. The look created, however, adds significantly to the lodge-like atmosphere many buyers are seeking which can add significantly to the value of the home.

Roof coverings
Roof coverings used in log homes are like those used in conventional homes. Fiberglass or composition shingles are the basic coverings offered by most manufacturers (when they include roof coverings in their package). Other popular coverings include cedar shakes, slate, and metal. These add significantly to the cost of a home, just as they would with conventional construction.

Trim
Log homes usually have more trimming, particularly on the exterior, than conventional homes. The quality of trim and its installation can affect the perceived quality of a completed log home. Because log home packages, styles, and owner preferences vary, there is no standard for trim. Also, since homeowners often install trim themselves, it may reflect their abilities rather than the quality of the structure itself. It is important to not judge all log homes by the quality of trim work found in some.

Log home trim varies from plain dimensional lumber (usually pine or cedar) to the same prefabricated trim used in conventional housing, to custom made trim from a variety of woods. Trim may be supplied ready to install or may arrive from the manufacturer as dimensional lumber to be cut and shaped on the job site. Log home interior trim is often stained and varnished rather than painted, a feature that would add considerably to the value of a conventional home.

Maintenance
While not a factor in appraising a log home to be constructed, maintenance plays a role in evaluating existing houses. Like conventional homes, log homes require periodic maintenance. As with conventional housing, neglecting maintenance affects the appearance and perceived value of the home. Log home manufacturers and builders stress the importance of maintaining a water-resistant wood preservative on the exterior log surfaces with UV protection or inhibitors. Failure to do so may result in a gray weathered appearance that some people find attractive, but many do not. While this may affect the perceived value of the house, the condition is not usually serious and is easily remedied by simply pressure washing or bleaching the exterior and applying a sealant. While the condition may look serious, it is usually no more serious than a conventional home in need of re- painting.

Shrinkage and Settlement
Settlement occurs in all types of houses, but the nature of log construction can make them susceptible to greater settlement than other systems. How settlement is handled by manufacturers, carpenters, and homeowners can all affect the quality of a log home.
Logs can be secured in the wall using a variety of fasteners. Three of the most common fasteners include spikes, lag screws, and through-bolts. Some manufacturers pre - drill the logs for the fasteners used to ensure proper placement, spacing, and vertical alignment. All three factors can affect the settlement of the log wall system and the integrity of its weather tight seals. Each log home manufacturer should provide details on the proper utilization of fasteners in their log wall system.

Sealing Systems
Each manufacturer includes a sealing system designed to prevent air and water infiltration at joints. A variety of materials are used, and new sealants frequently appear on the market. Sealants may be solid foam or compressible material such as butyl rubber, liquid foam, and caulk. Some systems use splines and adhesives instead of, or in addition to, foam and caulk sealants. Solid foams are supplied in rolls or sheets and are designed to be compressed between logs. They may be adhesive although some are not. Liquid foams are supplied in cans or bottles and are injected into holes or grooves. They are designed to expand, sealing spaces around them. Caulk is designed to be injected into joints and is often used to seal log home exteriors and interiors. Depending on a variety of factors, reapplying caulk may be a part of routine maintenance of a log home. It is important to properly maintain a log home to prolong its life and beauty.

Roof Systems
A variety of roof systems are used in log homes. The specific roof system used in home depends on owner preference, budget, and availability from the manufacturer. Many manufacturers offer more than one roof system. The type of roof system affects both the cost of the finished home and its perceived value.

Conventional

Conventional roofs are made from dimensional lumber assembled just as in conventionally framed houses. Roof framing material consists of either dimensional lumber rafters or prefabricated trusses. The framing is covered by plywood sheathing, felt paper, and shingles. The roof is insulated using fiberglass, foam batts, or blown -in -fibers. Roof ventilation is required just as for conventional houses. Because materials and construction are similar, the cost of a conventional roof is no different than in a conventional home. This is usually the least expensive roofing option for a log home.

Built-Up

Built-up roofs offer wooden (usually) ceiling coverings and exposed beams, both features sought after by many log home customers. A built-up roof is built by erecting a framework of timber rafters. Purlins, timbers set horizontally paralleling the ridge line, may also be used. Solid wood decking, usually of tongue and groove pine or cedar, is secured to the top of the roof framework. Rigid insulation is placed over the decking and covered with a layer of sheathings. Some systems add a layer of sleepers before the sheathing or use two layers of sheathing separated by sleepers to create an airspace for ventilation.

Shrinkage (the dimensional change) of logs occurs as they acclimate to the inside environment of the home. The amount of shrinkage per log (and ultimately the whole wall system) may differ due to a variety of factors.

Settlement results primarily from the shrinkage and/or compaction of logs after construction of a home. Shrinkage affects logs differently, depending on the average moisture content of the logs and the construction system used. Usually, logs settle as they shrink, slightly reducing the overall height of a log wall.

Because log systems vary widely, there is no standard for treatment of shrinkage/settlement that applies to all. The Log Homes Council of the National Association of Home Builders specifies that its members must either utilize a no-settling log system or have some method for accommodating settlement but leaves the engineering details to the individual manufacturers.

Each Log Home Council Member manufacture has defined specifics on how they address the settlement issue with their "settling" or "non-settling log system."

Energy Efficiency
Log homes have a deserved reputation for energy efficiency. Tests performed by the federal government found a log structure to perform as well or better than other types of construction, including an R11 insulated 2x4 framed wall structure, even though the
The nominal R-value of the log wall was less than nine.

Experts attribute the energy efficiency of log homes to thermal mass of the solid wood walls. In addition, a well-sealed and maintained log home does not exhibit energy loss due to convection or air infiltration that is characteristic of framed wall construction.

Although log homes have inherent energy efficiency, this can be offset by poor construction or maintenance. Log home manufacturers provide specific construction details and maintenance guidelines to ensure that homeowners realize the full benefit of log construction. If these guidelines are not followed, the result may be high utility bills.

Summary
Just as with frame construction, log homes show wide variation in design, style, and quality. Determining the value of a log home involves analyzing these characteristics not only in relation to th e conventional housing market, but as they relate to the log home market, too. Since log home buyers represent a unique market segment, they often desire qualities not sought by conventional home buyers. For many, the more a log home approaches a conventional one (drywall interior partitions and ceiling, painted trim) the less interested they are. In addition, many of the features sought by log home buyers would be considered expensive upgrades in a conventional house. For example, cathedral ceilings, hardwood floors, solid wood, custom cabinetry, exposed beam ceilings, fireplaces, wood wall and ceiling coverings, stained and varnished trim, porches and decks are considered "standard" amenities in many log homes.

The nature of the construction process also contributes to the high quality of log homes. Despite the pre- packaging of materials, there is very little pre-fabrication in a log home. Even with milled, pre- cut logs, assembly is usually labor intensive, requiring craftsman like skill. The result is a unique, highly customized home that carries a cost typical of custom craftsmanship.

Log home buyers also contribute to the value of their home. Log homes are rarely built as "spec" or tract homes. Most construction originates as "dream" homes for log home buyers. Thus, the home often receives far more attention from their original owners. Most log homeowners spend an extended period researching their home. One to three years spent selecting a log home is not uncommon. Home buyers are usually well versed in construction technology and log home characteristics. The homeowner usually directs the design of the home and monitors construction carefully. Most log homeowners are very attentive to maintenance.

As a result of the materials used in log homes and the methods used in their assembly, log homes usually cost more to build than conventional homes. Although manufactured log homes began as an inexpensive housing alternative, with advertising aimed at the "do it yourself and save market", the market has changed. Log home buyers expect higher quality from a log home than from a conventional home, with additional amenities. They occasionally participate in construction and may act as their own contractor. As a result, log homes are truly custom homes, with appeal to a growing, specialized market.

Marshall & Swift
For those new to the residential building market, Marshall &Swift is one of the authorities serving the appraisal industry. Marshall & Swift prides itself on providing appraisers with the necessary cost data to complete evaluations of residential properties across the country. It has served the industry for more than 75 years.

Seeing the unique fit the log homes market has within the residential industry, Marshall & Swift turned to the Log Homes Council in 1997 to learn how to capture the value of log homes more accurately in appraisals. The LHC assisted in developing the "Log Home Appraisal Training Guide" which was designed to be a companion text to the Residential Cost Handbook, a standard publication for Marshall & Swift.

The Log Homes Council encourages anyone interested in log home appraisal to utilize this resource to learn more about the designs, components, and customization of today's modern log homes. Topics in the Marshall & Swift Guide are similar to those contained in this document (energy efficiency, sealing systems, maintenance, etc.). Most sought after is the guide's analysis on appraisals of conventional versus log homes.

About the Author
Jim Cooper is an experienced log home builder who has also written a book on log home construction for the novice, *Log Homes Made Easy / Contracting and Building Your Own Log Home*. Jim also writes articles about log home construction and design for leading consumer magazines devoted to log homes and log home lifestyles.

About the Log Homes Council
The Log Homes Council is part of the Building Systems Councils, an umbrella organization of the National Association of Home Builders. Members of the Log Homes Council are log systems manufacturers. The Council is dedicated to promoting excellence in log wall construction by contributing to the standards and codes that affect the quality of log homes built in the United States. Members of the Log Homes Council produce model code complying building and are committed to professional and fair business practices.

8:38 AM
8/23/2023

IMPORTANT NOTES
READ CAREFULLY

WARNING!
This Southland Log Home package has been designed and engineered to comply with current and applicable building codes and must be constructed in accordance with these plans. Any modifications made to these plans are the responsibility of the owner and may result in unsafe conditions, structural concerns, violate building codes and will void the warranty on this product.

LOG STYLE & PROFILE
ROUND / FLAT

SYP
R/F

6x8 STOCKADE SYP

WARNING:
DO NOT use these plans to begin construction. These plans are for customer review and comment purposes only. SLH is not responsible for any construction begun prior to the customer receiving Final Plans.

DELIVERY COUNTY:	GARY PIERCE
DELIVERY STATE:	HARNETT NC
CUSTOMER ID NUMBER:	2301661
SITE ADDRESS:	558 LOOP ROAD BUNNLEVEL, NC 38323

SOUTHLAND LOG HOMES
800-845-3555 USA
803-781-5128 FAX
7521 BROAD RIVER ROAD
P.O. BOX 1688 IRMO, SC 29063-1668

MODEL:
LEE III

DESIGNED BY: LBP
CHECKED BY: PM
PLAN DATE: 08-23-23
DELIVERY DATE: 02-09-24

2301661
PROJECT NUMBER

A.2
SHEET NUMBER

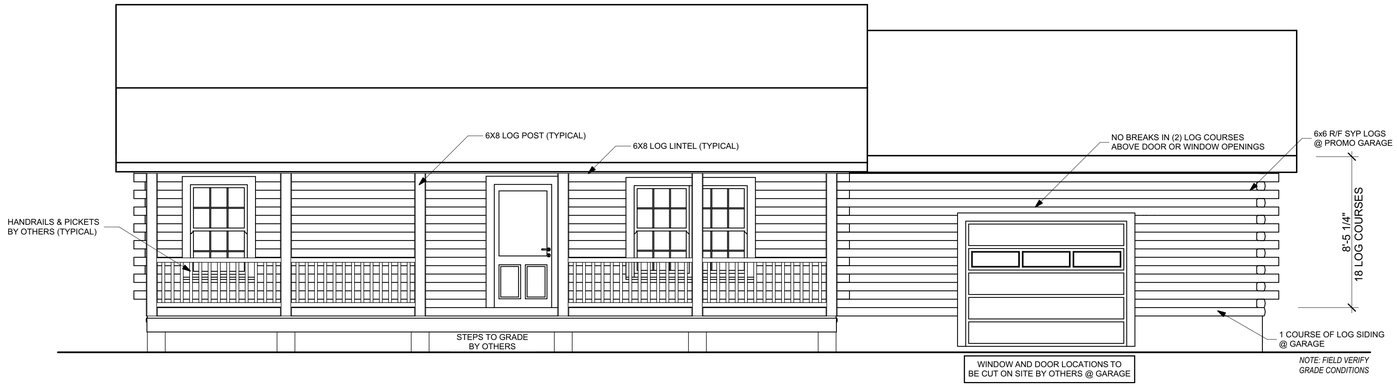

FRONT ELEVATION

SCALE: 1/4" = 1'-0"

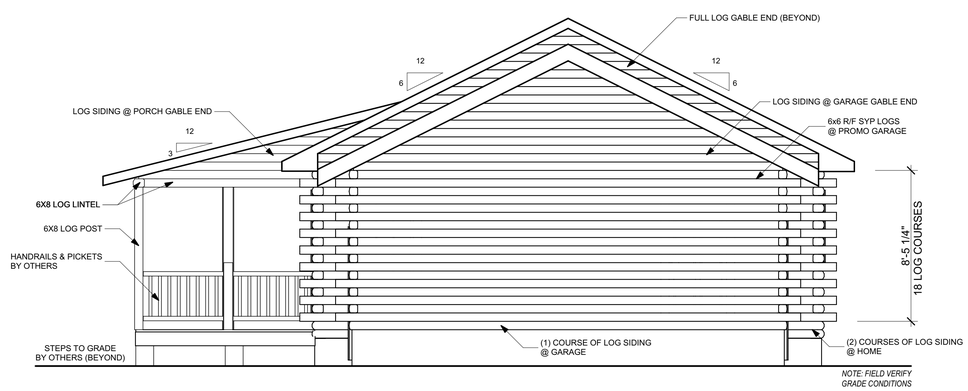

RIGHT ELEVATION

SCALE: 1/4" = 1'-0"

GENERAL ELEVATION NOTES:

ALL EXTERIOR WOOD DOOR TRIM AND EXTERIOR NON-RADIUS WOOD WINDOW TRIM TO BE PROVIDED BY SOUTHLAND LOG HOMES. EXTERIOR TRIM FOR CLAD DOORS, CLAD WINDOWS, AND ANY RADIUS WINDOW TO BE PROVIDED BY OTHERS. RIDGE VENT BY OTHERS.

GENERAL CONTRACTOR NOTES:

1.) CONTRACTOR TO VERIFY ALL DIMENSIONS BEFORE BEGINNING CONSTRUCTION.

2.) REFER TO SOUTHLAND LOG HOMES' CONSTRUCTION MANUAL FOR FURTHER INSTRUCTIONS.

IMPORTANT NOTES
READ CAREFULLY
FINAL PLANS

WARNING!

This Southland Log Home package has been designed according to the purchase contract and applicable building codes and will need to be constructed in accordance with these plans. All unauthorized deviations become the responsibility of the owner and may result in unsafe conditions in structure and/or violate building codes and will void the warranty on this product.

LOG STYLE & PROFILE
ROUND / FLAT

SYP
R/F

6x8 STOCKADE SYP

FINAL PLANS

Contractor is responsible to field verify all dimensions on your job site.

Some areas or local building departments may require sealed construction plans and/or engineered foundation plans. Contractor must contact local officials to determine if sealed plans are necessary and must notify Seller in writing at least thirty-five (35) days prior to delivery date. Purchaser is responsible for all costs incurred by Seller to modify Seller's Final Plans to meet such requirements. Change by the engineer who seals the plans. If your plans require "sealing" DO NOT START CONSTRUCTION UNTIL you have received your "sealed" plans from the engineer.)

GARY PIERCE

DELIVERY COUNTY: HARNETT
DELIVERY STATE: NC
SITE ADDRESS: 558 LOOP ROAD
BUNNLEVEL, NC 38323

SOUTHLAND LOG HOMES
800-845-3555 USA
803-781-5128 FAX
7521 BROAD RIVER ROAD
P.O. BOX 1668 IRMO, SC 29063-1668

MODEL:
LEE III

DESIGNER	CUTSHEETS
LBP	- - -
CHECKED BY: PM	CHECKED BY: - - -

PLAN DATE: 08-23-23

DELIVERY DATE: 02-09-24

2301661
PROJECT NUMBER

1.1
SHEET NUMBER

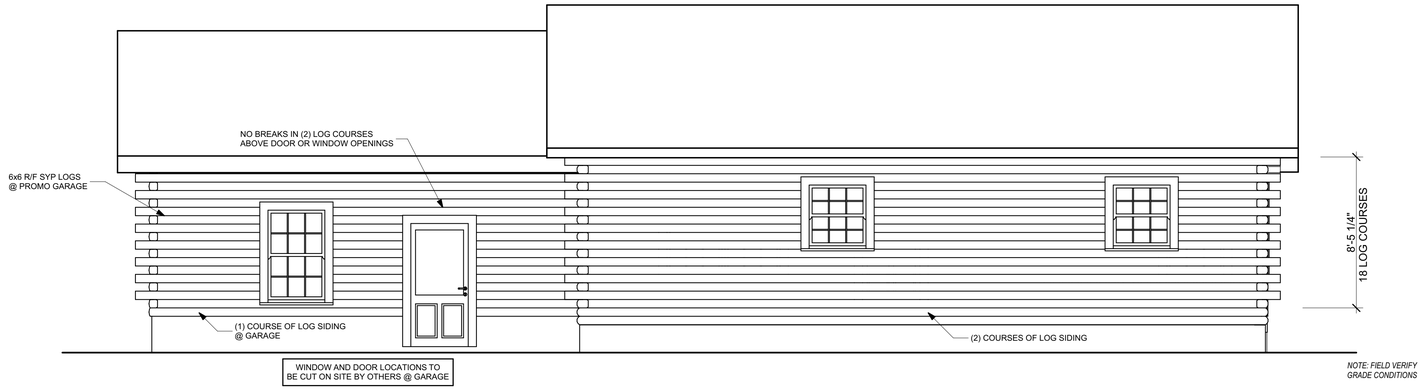

REAR ELEVATION

SCALE: 1/4" = 1'-0"

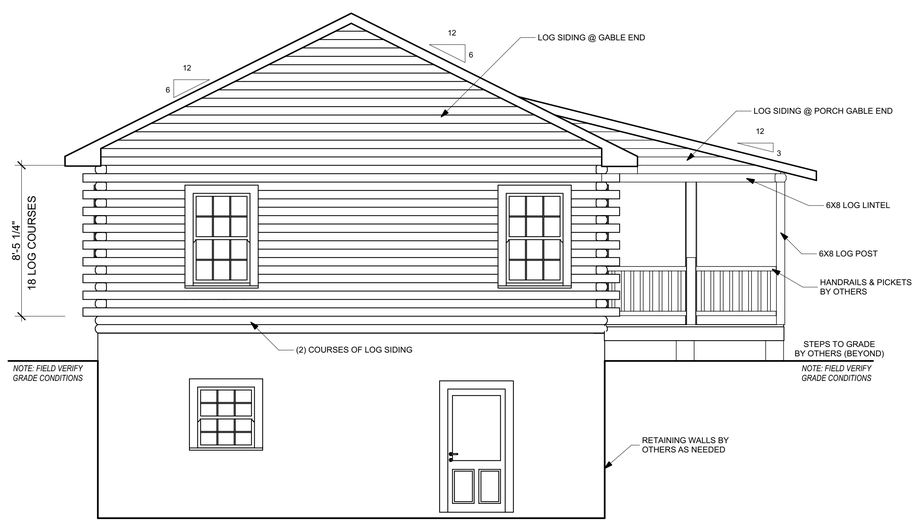

LEFT ELEVATION

SCALE: 1/4" = 1'-0"

GENERAL ELEVATION NOTES:

ALL EXTERIOR WOOD DOOR TRIM AND EXTERIOR NON-RADIUS WOOD WINDOW TRIM TO BE PROVIDED BY SOUTHLAND LOG HOMES. EXTERIOR TRIM FOR CLAD DOORS, CLAD WINDOWS, AND ANY RADIUS WINDOW TO BE PROVIDED BY OTHERS. RIDGE VENT BY OTHERS.

GENERAL CONTRACTOR NOTES:

1.) CONTRACTOR TO VERIFY ALL DIMENSIONS BEFORE BEGINNING CONSTRUCTION.

2.) REFER TO SOUTHLAND LOG HOMES' CONSTRUCTION MANUAL FOR FURTHER INSTRUCTIONS.

IMPORTANT NOTES
READ CAREFULLY
FINAL PLANS

WARNING!

This Southland Log Home package has been designed according to the purchase contract and applicable building codes, and should be constructed in accordance with these plans. All unauthorized deviations become the responsibility of the owner as a result, in unsafe conditions, structural concerns, violate building codes and will void the warranty on this product.

LOG STYLE & PROFILE
ROUND / FLAT

SYP
R/F

6x8 STOCKADE SYP

FINAL PLANS

Contractor is responsible to field verify all dimensions on your job site.

Some areas or local building departments may require sealed construction plans and/or engineered foundations. Purchaser must be familiar with local codes to determine if sealed plans are necessary and must notify Seller in writing at least thirty-five (35) days prior to delivery date. Purchaser is responsible for all costs incurred by Seller to modify Seller's Final Plans subject to any Change by the engineer who seals the plans. If your plans require "sealing" DO NOT START CONSTRUCTION UNTIL you have received your "sealed" plans from the engineer.)

GARY PIERCE

DELIVERY COUNTY: HARNETT
DELIVERY STATE: NC
SITE ADDRESS: 558 LOOP ROAD
BUNNLEVEL, NC 38323

SOUTHLAND LOG HOMES
800-845-3555 USA
803-781-5128 FAX
7521 BROAD RIVER ROAD
P.O. BOX 1668 IRMO, SC 29063-1668

MODEL:
LEE III

DESIGNER	CUTSHEETS
LBP	- - -
CHECKED BY: PM	CHECKED BY: - - -

PLAN DATE: 08-23-23

DELIVERY DATE: 02-09-24

2301661
PROJECT NUMBER

1.2
SHEET NUMBER

SLH Window Schedule

MARK	SIZE	ROUGH OPENING	TYPE	QTY	REMARKS	PROVIDED...
A	3-0 x 3-2	3-2 1/8 x 3-4 7/8	D/H	2	Bronze Clad Single	Southland
B	3-0 x 4-10	6-3 7/8 x 5-0 7/8	D/H	1	Bronze Clad Twin	Southland
C	3-0 x 4-10	3-2 1/8 x 5-0 7/8	D/H	3	Bronze Clad Single	Southland
D	3-0 x 4-10	3-2 1/8 x 5-0 7/8	D/H	1	Bronze Clad Single-Tempered	Southland

DOOR SCHEDULE

MARK	SIZE	ROUGH OP...	TYPE	QTY	REMARKS	PROVIDED...
1	3-0 x 6-8	3-2 1/2 x 6-10 1/2	EXT	2	Fiberglass 2-Panel-LI	Southland
2	3-0 x 6-8	3-2 1/2 x 6-10 1/2	EXT	1	Steel 6-Panel 20 Min. F.R. Door-LO	Southland
3	12-0 x 7-0	Owner to Verify	EXT	1	Custom Garage Door	Owner

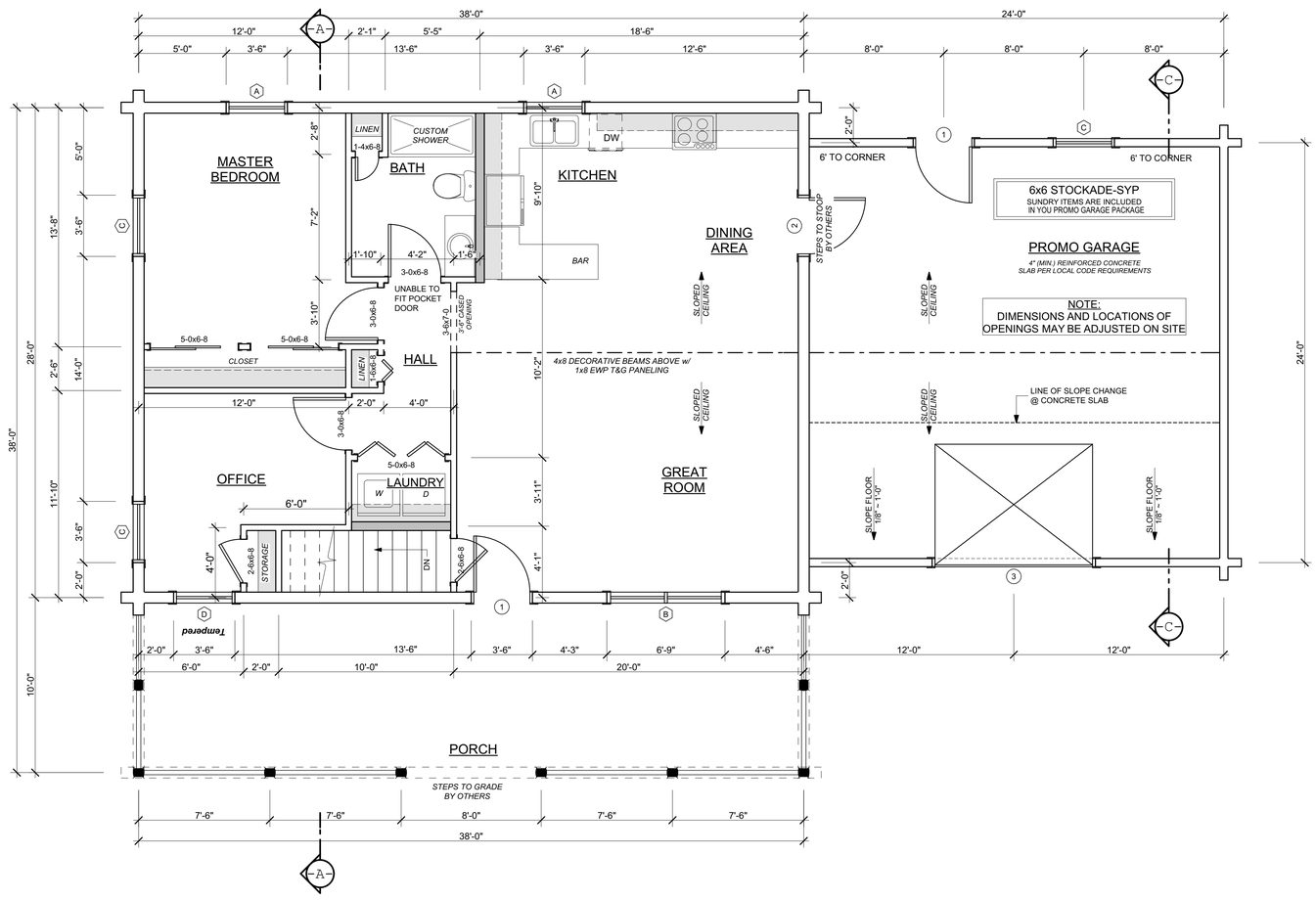

First Floor Plan

SCALE: 1/4" = 1'-0"

SQUARE FOOTAGE (ANSI Z765-2003)	
HEATED AREAS:	
FIRST FLOOR	1106 Sq. Ft.
TOTAL HEATED	1106 Sq. Ft.
UNHEATED AREAS:	
PORCH(ES)	380 Sq. Ft.
GARAGE	576 Sq. Ft.
BASEMENT	999 Sq. Ft.
TOTAL UNHEATED	1955 Sq. Ft.
TOTAL UNDER ROOF	3061 Sq. Ft.

ROUGH CONSTRUCTION STAIRS ONLY

STRAIGHT-STAIRS TO BASEMENT PROVIDED BY OWNER

FLOOR/FLOOR HEIGHT= 10'-11 1/2"
17 RISERS @ +- 7 3/4"
16 TREADS @ 10" MIN.

6x8 STOCKADE-SYP
SUNDRY ITEMS ARE INCLUDED IN YOUR LOG HOME PACKAGE

1X8 T&G PORCH CEILING DECKING & HOUSE SOFFIT MATERIALS INCLUDED IN LOG HOME PACKAGE

FLOOR PLAN KEY:

- INTERIOR WALL
- INTERIOR LOAD-BEARING WALL
- PLUMBING WALL
- STOCKADE / DOVETAIL LOG WALL (REFER TO CONTRACT)
- HANDRAILS & PICKETS (BY OTHERS)
- 6x8 LOG POSTS (REFER TO CONTRACT)
- 6x8 LOG LINTEL (REFER TO CONTRACT)
- TOILET (BY OTHERS)
- BIDET (BY OTHERS)
- CEILING FAN W/ LIGHT (BY OTHERS)
- JUNCTION BOX (BY OTHERS)
- LIGHT (BY OTHERS)
- VENT FAN W/ LIGHT (BY OTHERS)
- SD SMOKE DETECTOR (BY OTHERS)
- S SWITCH (BY OTHERS)
- 220 220v OUTLET (BY OTHERS)
- 110 110v ARC-FAULT CIRCUIT INTERRUPTER (BY OTHERS)
- WP WATERPROOF OUTLET (BY OTHERS)
- GFCI GROUND FAULT CIRCUIT INTERRUPTER (BY OTHERS)

GENERAL FLOOR PLAN NOTES:

1.) UNLESS OTHERWISE NOTED, ROOF LOADS ARE DESIGNED FOR 15 PSF DEAD LOAD. ALL OTHER ROOF LOADS TO BE DETERMINED BY LOCAL BUILDING CODES

SOUTLAND LOG HOMES CALCULATES SQUARE FOOTAGE ACCORDING TO STANDARDS SET BY (ANSI Z765 - 2003)

- HEATED SQUARE FOOTAGE IS CALCULATED FROM OUTSIDE TO OUTSIDE OF WALLS
- STAIRS CAN BE COUNTED AS SQUARE FOOTAGE ON EACH LEVEL
- AREA WITH CEILING HEIGHT IS LESS THAN 5'-0" IS CONSIDERED STORAGE (IF KNEEWALL IS PRESENT IT IS UNHEATED STORAGE).
- UNHEATED SQUARE FOOTAGE IS CALCULATED FROM INSIDE TO INSIDE OF WALLS

GENERAL CONTRACTOR NOTES:

1.) CONTRACTOR TO VERIFY ALL DIMENSIONS BEFORE BEGINNING CONSTRUCTION.

2.) REFER TO SOUTHLAND LOG HOMES' CONSTRUCTION MANUAL FOR FURTHER INSTRUCTIONS.

IMPORTANT NOTES
READ CAREFULLY
FINAL PLANS

WARNING!

This Southland Log Home package has been designed according to the purchase contract specifications and plans that will need to be constructed in accordance with these plans. All unauthorized deviations become the responsibility of the owner and may result in unsafe conditions in structural members, violate building codes and will void the warranty on this product.

LOG STYLE & PROFILE
ROUND / FLAT

SYP
R/F

6x8 STOCKADE SYP

FINAL PLANS

Contractor is responsible to field verify all dimensions on your job site.

Some areas or local building departments may require sealed construction plans and engineering. Contact your local building department to determine if sealed plans are necessary and must notify Seller in writing at least thirty-five (35) days prior to delivery date. Purchaser is responsible for all costs incurred by Seller due to lack of or incorrect information. Change by the engineer who seals the plans. If your plans require "sealing" DO NOT START CONSTRUCTION UNTIL you have received your "sealed" plans from the engineer.)

GARY PIERCE

DELIVERY COUNTY: HARNETT
DELIVERY STATE: NC
SITE ADDRESS: 558 LOOP ROAD
BUNNLEVEL, NC 38323

SOUTHLAND LOG HOMES
800-845-3555 USA
803-781-5128 FAX
7521 BROAD RIVER ROAD
P.O. BOX 1668 IRMO, SC 29063-1668

MODEL: LEE III

DESIGNER	CUTSHEETS
LBP	- - -
CHECKED BY: PM	CHECKED BY: - - -

PLAN DATE: 08-23-23

DELIVERY DATE: 02-09-24

2301661
PROJECT NUMBER

2.1
SHEET NUMBER

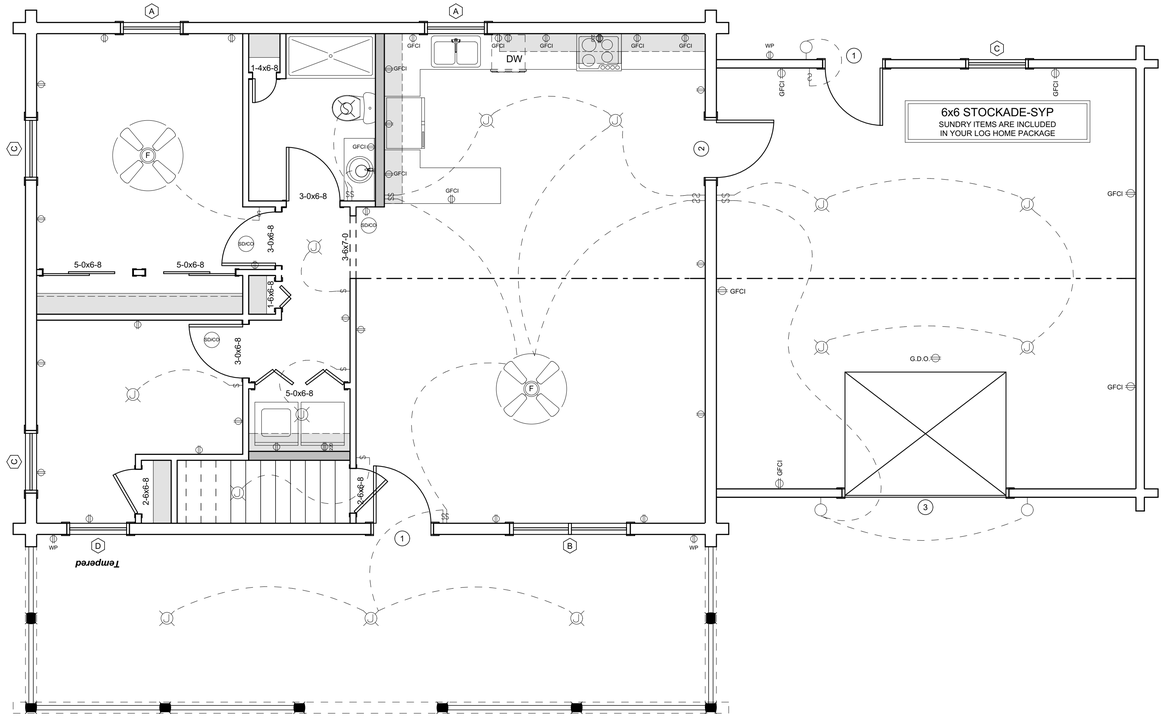

Electrical - First Floor

SCALE: 1/4" = 1'-0"

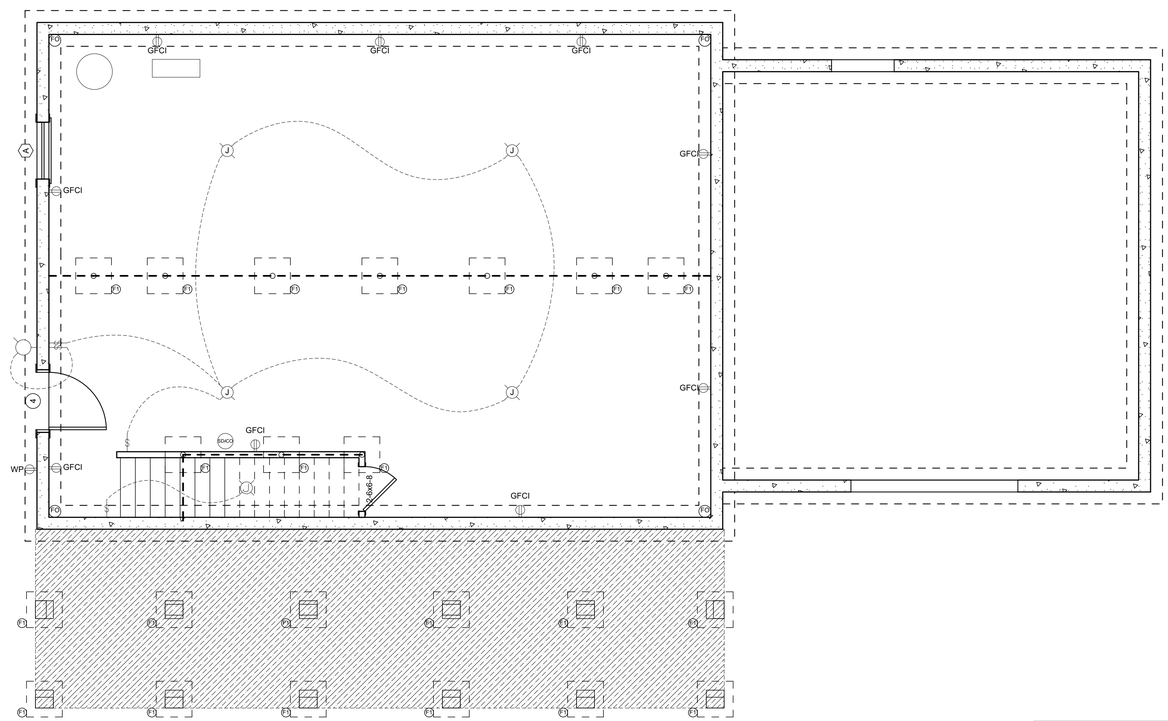

Electrical - Basement

SCALE: 1/4" = 1'-0"

ELECTRICAL PLAN KEY:

- CEILING FAN W/ LIGHT (BY OTHERS)
- JUNCTION BOX (BY OTHERS)
- LIGHT (BY OTHERS)
- VENT FAN W/ LIGHT (BY OTHERS)
- SD — SMOKE DETECTOR (BY OTHERS)
- SWITCH (BY OTHERS)
- 220v OUTLET (BY OTHERS)
- 110v ARC-FAULT CIRCUIT INTERRUPTER OUTLET (BY OTHERS)
- WP — WATERPROOF OUTLET (BY OTHERS)
- GFCI — GROUND FAULT OUTLET (BY OTHERS)

GENERAL CONTRACTOR NOTES:

1.) CONTRACTOR TO VERIFY ALL DIMENSIONS BEFORE BEGINNING CONSTRUCTION.

2.) REFER TO SOUTHLAND LOG HOMES' CONSTRUCTION MANUAL FOR FURTHER INSTRUCTIONS.

IMPORTANT NOTES
READ CAREFULLY
FINAL PLANS

WARNING!

This Southland Log Home package has been designed according to the purchase contract and applicable building codes, and should be constructed in accordance with these plans. All unauthorized deviations become the responsibility of the owner and may result in unsafe conditions in structure and/or violate building codes and will void the warranty on this product.

LOG STYLE & PROFILE
ROUND / FLAT

SYP
R/F

6x8 STOCKADE SYP

FINAL PLANS

Contractor is responsible to field verify all dimensions on your job site.

Some areas or local building departments may require sealed construction plans and/or engineered floor and roof framing plans. Contact your local building official to determine if sealed plans are necessary and must notify Seller in writing at least thirty-five (35) days prior to delivery date. Purchaser is responsible for all engineering costs and fees. Failure to notify Seller in writing will result in a Change by the engineer who seals the plans. If your plans require "sealing" DO NOT START CONSTRUCTION UNTIL you have received your "sealed" plans from the engineer.)

GARY PIERCE

DELIVERY COUNTY: HARNETT
DELIVERY STATE: NC
SITE ADDRESS: 558 LOOP ROAD
BUNNLEVEL, NC 38323

SOUTHLAND LOG HOMES
800-845-3555 USA
803-781-5128 FAX
7521 BROAD RIVER ROAD
P.O. BOX 1668 (RMO) SC 29063-1668

MODEL: LEE III

DESIGNER	CUTSHEETS
LBP	- - -
CHECKED BY: PM	CHECKED BY: - - -

PLAN DATE: 08-23-23

DELIVERY DATE: 02-09-24

2301661
PROJECT NUMBER

2.2
SHEET NUMBER

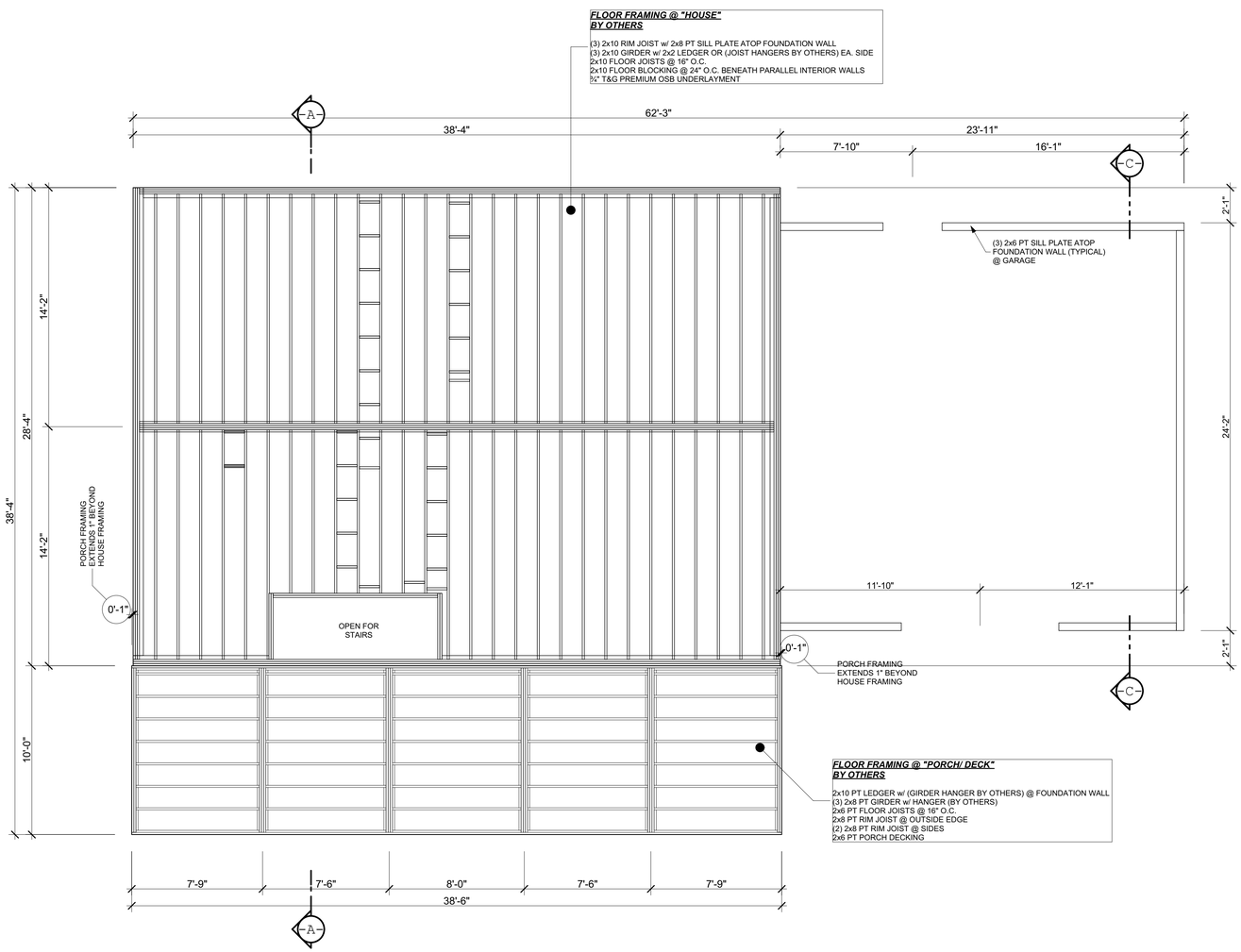

Floor Framing Plan

SCALE: 1/4" = 1'-0"

GENERAL FLOOR FRAMING NOTES:

1.) PROVIDE SOLID BLOCKING BENEATH ALL LOG POSTS.

2.) PROVIDE BLOCKING AT MIDSPAN FOR ALL LOG JOISTS 10'-0" LONG AND LONGER.

3.) PROVIDE DOUBLE JOISTS OR PERPENDICULAR BLOCKING @ 24" O.C. BENEATH ALL STUD WALLS RUNNING PARALLEL TO FLOOR JOISTS.

4.) CRAWL SPACE HEIGHT TO BE A MINIMUM OF 18" FROM BOTTOM OF FLOOR JOIST TO TOP OF FINISH GRADE OR PER LOCAL CODE - WHICHEVER IS GREATER.

5.) DROP PORCH AND DECK PIER HEIGHT SO THAT TOP OF DECKING IS 5 5/8" BELOW MAIN HOUSE SUBFLOOR.

6.) FLOOR SYSTEM DESIGN BASED ON SELF-SUPPORTING ROOF. ALL ROOF LOADS TO BE CARRIED ON LOG WALLS, UNLESS NOTED OTHERWISE.

7.) ALL FASTENERS THAT WILL BE IN CONTACT WITH TREATED LUMBER MUST BE NO LESS THAN A HOT DIPPED GALVANIZED COATING.

GENERAL CONTRACTOR NOTES:

1.) CONTRACTOR TO VERIFY ALL DIMENSIONS BEFORE BEGINNING CONSTRUCTION.

2.) REFER TO SOUTHLAND LOG HOMES' CONSTRUCTION MANUAL FOR FURTHER INSTRUCTIONS.

IMPORTANT NOTES
READ CAREFULLY
FINAL PLANS

WARNING!

This Southland Log Home package has been designed according to the purchase contract and applicable building codes, if erected, to be constructed in accordance with these plans. All unauthorized deviations become the responsibility of the owner and may result in unsafe conditions, structural concerns, violate building codes and will void the warranty on this product.

LOG STYLE & PROFILE
ROUND / FLAT

SYP
R/F

6x8 STOCKADE SYP

FINAL PLANS

Contractor is responsible to field verify all dimensions on your job site.

Some areas or local building departments may require sealed construction plans and/or engineered foundations. It is the responsibility of the purchaser to determine if sealed plans are necessary and must notify Seller in writing at least thirty-five (35) days prior to delivery date. Purchaser is responsible for all costs incurred by Seller to modify the plans if not given as stated in writing. Change by the engineer who seals the plans. If your plans require "sealing" DO NOT START CONSTRUCTION UNTIL you have received your "sealed" plans from the engineer.)

GARY PIERCE

DELIVERY COUNTY: HARNETT
DELIVERY STATE: NC
SITE ADDRESS: 558 LOOP ROAD
BUNNLEVEL, NC 38323

SOUTHLAND LOG HOMES
800-845-3555 USA
803-781-5128 FAX
7521 BROAD RIVER ROAD
P.O. BOX 1668 IRMO, SC 29063-1668

MODEL:
LEE III

DESIGNER	CUTSHEETS
LBP	- - -
CHECKED BY: PM	CHECKED BY: - - -

PLAN DATE: 08-23-23

DELIVERY DATE: 02-09-24

2301661
PROJECT NUMBER

3.1
SHEET NUMBER

SLH Window Schedule BASEMENT							SLH Door Schedule BASEMENT						
MARK	SIZE	ROUGH OPENING	TYPE	QTY	REMARKS	PROVIDED...	MARK	SIZE	ROUGH OP...	TYPE	QTY	REMARKS	PROVIDED...
A	3-0 x 3-2	3-2 1/8 x 3-4 7/8	D/H	1	Bronze Clad Single	Southland	4	3-0 x 6-8	3-2 1/2 x 6-10 1/2	EXT	1	Fiberglass 2-Panel-RI	Southland

BASEMENT EGRESS NOTES:

BUILDING CODES REQUIRE THAT ALL BASEMENTS HAVE A DOOR OR EGRESS WINDOW TO THE OUTSIDE UNLESS IT IS SPECIFICALLY USED TO HOUSE MECHANICAL EQUIPMENT AND NOT EXCEED A TOTAL FLOOR AREA OF 200 SQUARE FEET

FOOTING SCHEDULE

MARK	MARK	REINFORCING
F0	2'-0" x 12" x CONT.	2 #4 BARS CONTINUOUS
F1	2'-0" x 2'-0" x 8"	3 #5 BARS EACH WAY
F2	3'-0" x 3'-0" x 18"	5 #5 BARS EACH WAY
F3	2'-0" x 3'-0" x 18"	#5 BARS @ 6" O.C.
F4	3'-0" x 5'-0" x 18"	#5 BARS @ 6" O.C.
F5	3'-0" x 8'-0" x 18"	#5 BARS @ 6" O.C.
F6	4'-0"x4'-0"x24"	7 #5 BARS EACH WAY
F7	2'-6" x 2'-6" x 15"	3 #5 BARS EACH WAY
F8	3'-6" x 3'-6" x 24"	6 #5 BARS EACH WAY
F9	2'-9" x 2'-9" x 18"	4 #5 LONGITUDINAL BARS
F10	3'-0" x 1'-0" x Cont.	3 #5 LONGITUDINAL BARS & 1 #5 TRANSVERSELY @ 24"oc
F11	4'-9" x 4'-9" x 2'-6"	10 #5 BARS EACH WAY
F12	4'-6" x 4'-6" x 2'-3"	9 #5 BARS EACH WAY
F13	5'-9" x 5'-9" x 2'-10"	(2) ROWS OF (7) #5 BARS EACH WAY
F14	5'-0" x 5'-0" x 2'-6"	(2) ROWS OF (6) #5 BARS EACH WAY

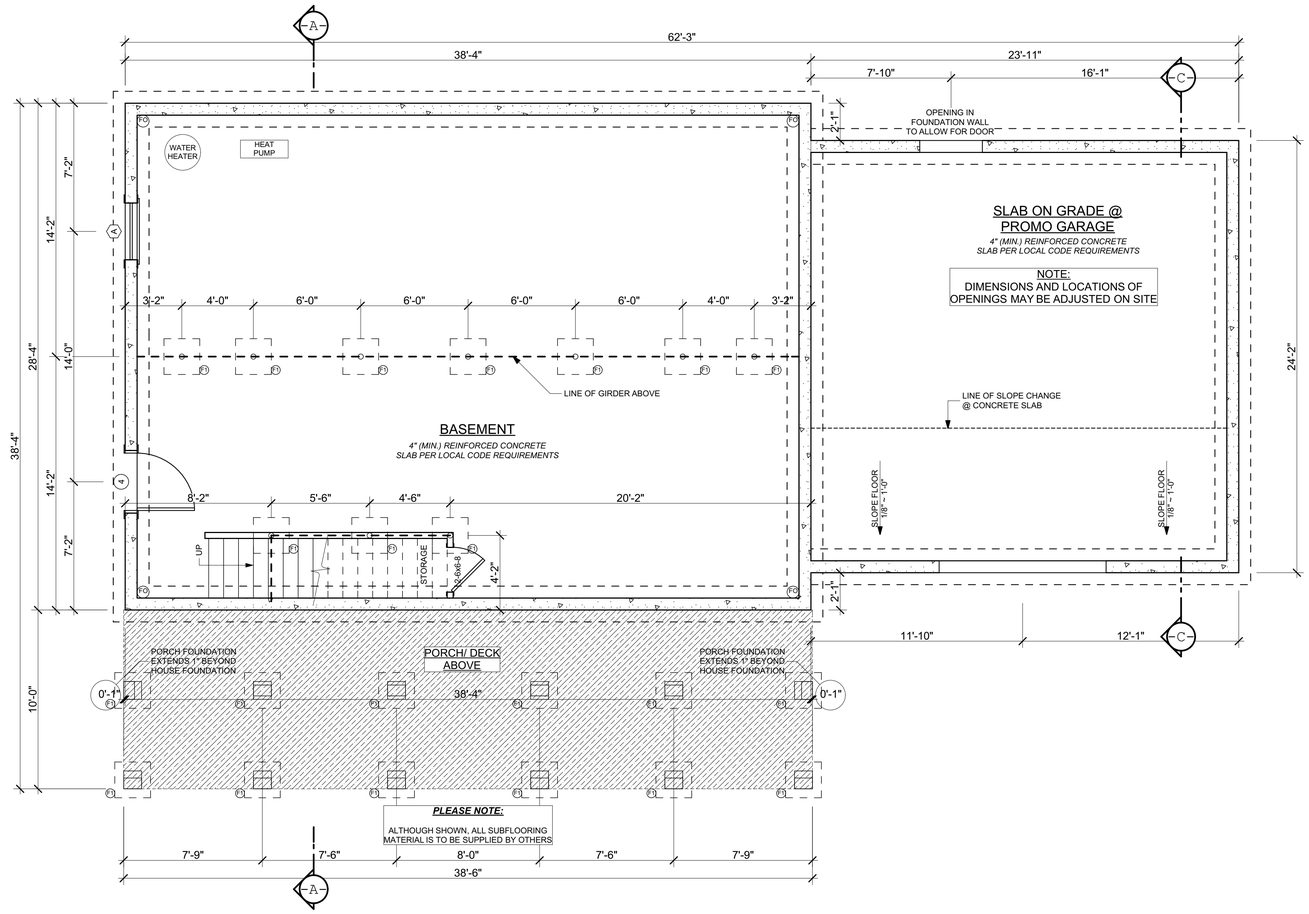

Foundation Plan

SCALE: 1/4" = 1'-0"

FOUNDATION PLAN KEY:

- 8" MIN. FOUNDATION WALL w/ 2' FOOTING
- 3" (MIN.) STEEL COLUMN (BASEMENT)
- 3" (MIN.) STEEL COLUMN w/ POINT LOAD ABOVE (BASEMENT)
- 3" (MIN.) STEEL COLUMN w/ POINT LOAD ABOVE & SOLID BLOCKING (BASEMENT)
- 3" (MIN.) STEEL COLUMN w/ POINT LOAD ABOVE @ FOUNDATION WALL (BASEMENT)
- 12" SQUARE CMU PIER GROUTED @ FOUNDATION WALL ***(CRAWLSPACE) see detail sheet 6.1***
- 12" SQUARE CMU PIER GROUTED ***(CRAWLSPACE) see detail sheet 6.1***
- 12" SQUARE CMU PIER GROUTED CENTERED BLOCKING ***(CRAWLSPACE) see detail sheet 6.1***
- 12" SQUARE CMU PIER GROUTED w/ POINT LOAD ABOVE ***(CRAWLSPACE) see detail sheet 6.1***
- 12" SQUARE CMU PIER GROUTED w/ POINT LOAD ABOVE & SOLID BLOCKING ***(CRAWLSPACE) see detail sheet 6.1***
- POINT LOAD FROM ABOVE

GENERAL BASEMENT NOTES:

1.) DROP PORCH AND DECK PIER HEIGHT SO THAT TOP OF DECKING IS 5 5/8" BELOW MAIN HOUSE SUBFLOOR.

2.) FIREPLACE DIMENSIONS AND SPECIFICATIONS TO BE VERIFIED WITH OWNER BEFORE CONSTRUCTION.

3.) 12" x 12" FOUNDATION PIERS WITH 24" x 24" CONCRETE FOOTINGS ARE SHOWN. REINFORCE FOOTING WITH (3) #5 REBARS EACH WAY.

4.) FOR REBAR PLACEMENT IN EXTERIOR FOUNDATION WALL FOOTING SEE "FOUNDATION/ BASEMENT" IN THE CONSTRUCTION DETAIL SHEETS.

5.) 16" x 16" FULLY GROUTED MASONRY BLOCK COLUMN RE'D @ EA. FOUNDATION END OF THE MULTIPLE 2X10 & GLULAM GIRDERS. REINFORCE EACH CELL w/ (1) #5 REBAR MIN. BOLT WOOD SEAT ATOP COLUMN FOR GIRDER TO BEAR UPON.

GENERAL SLAB ON GRADE NOTES:

1.) REINFORCE FOOTING WITH (2) #4 REBAR EACH WAY.

2.) DROP PORCH AND DECK SLAB HEIGHT SO THAT TOP OF DECKING IS 5 5/8" BELOW MAIN HOUSE SUBFLOOR.

3.) FLOOR SYSTEM DESIGN BASED ON SELF-SUPPORTING ROOF. ALL ROOF LOADS TO BE CARRIED ON LOG WALLS, UNLESS NOTED OTHERWISE.

4.) FIREPLACE DIMENSIONS AND SPECIFICATIONS TO BE VERIFIED WITH OWNER BEFORE CONSTRUCTION.

GENERAL CONTRACTOR NOTES:

1.) CONTRACTOR TO VERIFY ALL DIMENSIONS BEFORE BEGINNING CONSTRUCTION.

2.) REFER TO SOUTHLAND LOG HOMES' CONSTRUCTION MANUAL FOR FURTHER INSTRUCTIONS.

IMPORTANT NOTES
READ CAREFULLY
FINAL PLANS

WARNING!

This Southland Log Home package has been designed according to the purchase contract specifications and plans. This package must be constructed in accordance with these plans. All unauthorized deviations become the responsibility of the owner and may result in unsafe conditions in structure and/or violate building codes and will void the warranty on this product.

LOG STYLE & PROFILE
ROUND / FLAT

SYP
R/F

6x8 STOCKADE SYP

FINAL PLANS

Contractor is responsible to field verify all dimensions on your job site.

Some areas or local building departments may require sealed construction plans. Contact your local building department and your local engineer to determine if sealed plans are necessary and must notify Seller in writing at least thirty-five (35) days prior to delivery date. Purchaser is responsible for all costs incurred by Seller to modify the plans to meet local codes. Change by the engineer who seals the plans. If your plans require "sealing" DO NOT START CONSTRUCTION UNTIL you have received your "sealed" plans from the engineer.)

GARY PIERCE

DELIVERY COUNTY: HARNETT
DELIVERY STATE: NC
SITE ADDRESS: 558 LOOP ROAD
BUNNLEVEL, NC 38323

SOUTHLAND LOG HOMES
800-845-3555 USA
803-781-5128 FAX
7531 BROAD RIVER ROAD
P.O. BOX 1668 RMO, SC 29063-1668

MODEL:
LEE III

DESIGNER	CUTSHEETS
LBP	- - -
CHECKED BY: PM	CHECKED BY: - - -

PLAN DATE: 08-23-23
DELIVERY DATE: 02-09-24

2301661
PROJECT NUMBER

3.2
SHEET NUMBER

NAILING SCHEDULE:			
JOIST TO SILL TO GIRDER TOENAIL	3-8d	BUILT-UP CORNER STUDS	10d @ 24"o.c.
BRIDGING TO JOIST, TOENAIL EACH END	3-8d	BUILT-UP GIRDERS AND BEAMS	10d @ 32" o.c. TOP AND BOTTOM STAGGERED 2-10d @ ENDS AND AT EACH SPLICE
1"x6" SUBFLOOR OR LESS TO EACH JOIST FACE NAIL	2-8d		
WIDER THAN 1"x6" SUBFLOOR TO EACH JOIST FACE NAIL	3-8d		
2" SUBFLOOR TO JOIST OR GIRDER, BLIND AND FACE NAIL	2-16d	2" PLANKS	2-16d @ EACH BEARING
SOLE PLATE TO JOIST OR BLOCKING, FACE NAIL	16d @ 16"o.c.	PLYWOOD AND PARTICLEBOARD, SUBFLOOR, ROOF AND WALL SHEETING(TO FRAMING): 1/2" OR LESS	8d @ 6" ON CENTER AT EDGES AND INTERMEDIATE SUPPORT
TOP PLATE TO STUD, END NAIL	2-16d		
STUD TO SOLE PLATE	3-8d TOENAIL OR 2-16d END NAIL	PLYWOOD AND PARTICLEBOARD, SUBFLOOR, ROOF AND WALL SHEETING(TO FRAMING): 19/32" -3/4"	8d @ 6" ON CENTER AT EDGES AND INTERMEDIATE SUPPORT
DOUBLE STUDS, FACE NAIL	10d @ 24" o.c.		
DOUBLE TOP PLATE, FACE NAIL	10d @ 16"o.c.	PLYWOOD AND PARTICLE BOARD, SUBFLOOR, ROOF AND WALL SHEETING(TO FRAMING): 7/8" -1"	8d @ 6" ON CENTER AT EDGES AND INTERMEDIATE SUPPORT
TOP PLATES, LAPS AND INTERSECTIONS, FACE NAIL	2-10d		
CONTINUED HEADER, TWO PIECES	16d @ 16"oc ALONG EACH EDGE	PLYWOOD AND PARTICLEBOARD, SUBFLOOR, ROOF AND WALL SHEETING(TO FRAMING): 1'1/8" -1'1/4"	10d @ 6" ON CENTER AT EDGES AND INTERMEDIATE SUPPORT
CEILING JOIST TO PLATE, TOENAIL	3-8d		
CONTINUOUS HEADER TO STUD, TOENAIL	4-8d	COMBINATION SUBFLOOR-UNDERLAYMENT(TO FRAMING): 3/4" AND LESS	8d @ 6" ON CENTER AT EDGES AND INTERMEDIATE SUPPORT
CEILING JOIST, LAPS OVER PARTITIONS, FACE NAIL	3-10d		
CEILING JOIST TO PARALLEL RAFTERS, FACE NAIL	3-10d	COMBINATION SUBFLOOR-UNDERLAYMENT(TO FRAMING): 7/8" -1"	8d @ 6" ON CENTER AT EDGES AND INTERMEDIATE SUPPORT
RAFTER TO PLATE, TOENAIL	2-16d		
1" BRACE TO EACH STUD AND PLATE, FACE NAIL	2-8d	COMBINATION SUBFLOOR-UNDERLAYMENT(TO FRAMING): 1'1/8" -1'1/4"	10d @ 6" ON CENTER AT EDGES AND INTERMEDIATE SUPPORT
1"x8" SHEATHING OR LESS TO EACH BEARING, FACE NAIL	2-8d		
WIDER THAN 1'x8" SHEATHING TO EACH BEARING, FACE NAIL	3-8d		

ROOF FRAMING @ "MAIN ROOF"

- ROOF SLOPE 6:12
- STANDARD BOTTOM CHORD EXTENDED ROOF TRUSSES @ 16" O.C.
- GABLE END ROOF TRUSS @ GABLE END
- 2x4 TRUSS BRACING
- 2x6 TRUSS PLATES
- 2x4 OVERHANG BRACING
- 5/8" CDX ROOF SHEATHING
- 30# ROOFING FELT
- ROOF COVERING BY OTHERS
- 1X8 T&G SOFFIT MATERIALS @ PERIMETER OF HOUSE

ROOF FRAMING @ "GR/DINING/KITCHEN"

- ROOF SLOPE 6:12
- CUSTOM SCISSOR ROOF TRUSSES @ 16" O.C.
- 2x4 TRUSS BRACING
- 2x6 TRUSS PLATES
- 4x8 DECORATIVE RAFTERS @ 48" O.C.
- 4x8 COLLAR TIES @ 48" O.C.
- 2x4 OVERHANG BRACING
- 5/8" CDX ROOF SHEATHING
- 30# ROOFING FELT
- ROOF COVERING BY OTHERS
- 1X8 T&G VAULTED CEILING MATERIAL
- 1X8 T&G SOFFIT MATERIALS @ PERIMETER OF HOUSE

ROOF FRAMING @ "GARAGE"

- ROOF SLOPE 6:12
- 2x10 RAFTERS @ 16" O.C.
- 2x10 COLLAR TIES @ 16" O.C.
- 2x6 RAFTER PLATES
- 2x4 OVERHANG BRACING
- 5/8" CDX ROOF SHEATHING
- 30# ROOFING FELT
- 30 YEAR ARCHITECTURAL SHINGLES
- 1X8 T&G SOFFIT MATERIALS @ PERIMETER OF HOUSE

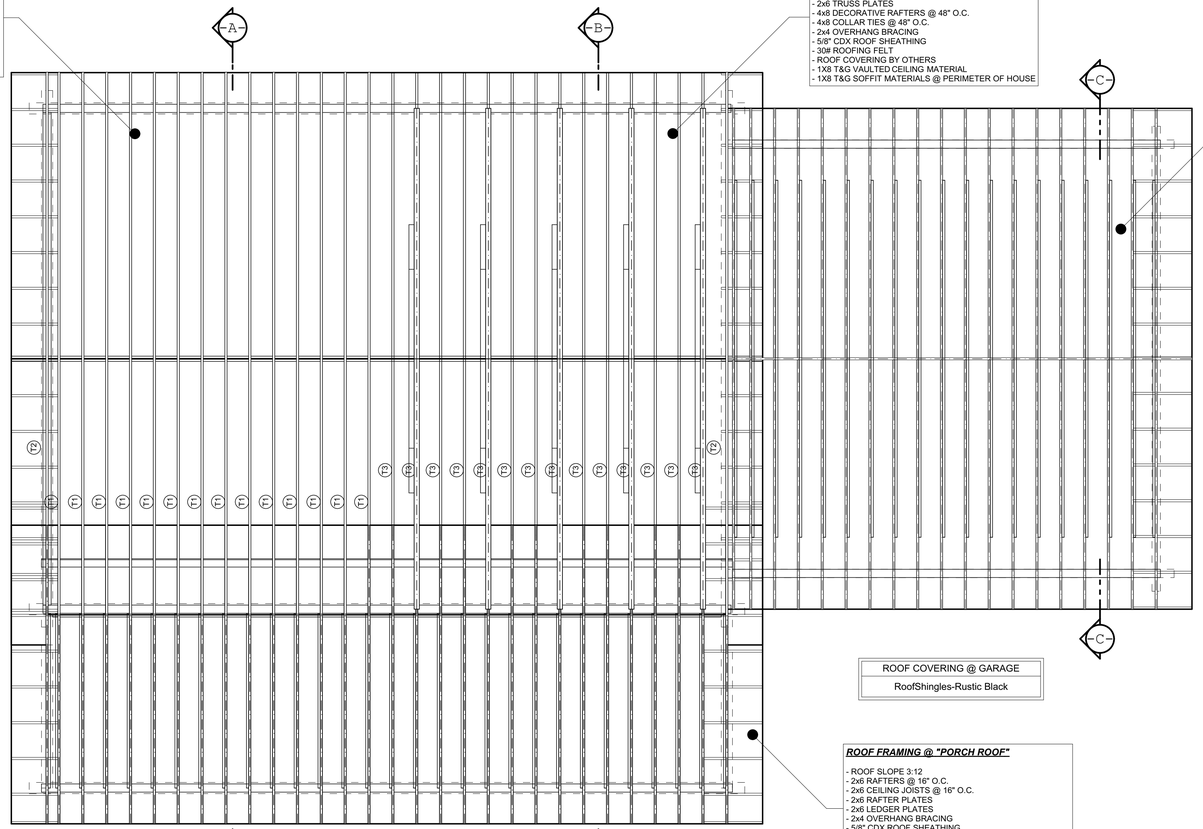

ROOF COVERING @ GARAGE
RoofShingles-Rustic Black

ROOF FRAMING @ "PORCH ROOF"

- ROOF SLOPE 3:12
- 2x6 RAFTERS @ 16" O.C.
- 2x6 CEILING JOISTS @ 16" O.C.
- 2x6 RAFTER PLATES
- 2x6 LEDGER PLATES
- 2x4 OVERHANG BRACING
- 5/8" CDX ROOF SHEATHING
- 30# ROOFING FELT
- ROOF COVERING BY OTHERS
- 1X8 T&G PORCH CEILING MATERIAL
- 1X8 T&G SOFFIT MATERIALS @ PERIMETER OF HOUSE

ROOF COVERING @ HOUSE
Roof Covering By Others

Roof Framing Plan

SCALE: 1/4" = 1'-0"

TRUSS LAYOUT KEY:

- T1 COMMON ROOF TRUSS
- T2 GABLE ROOF TRUSS
- T3 SCISSOR ROOF TRUSS
- T4 MONO-SCISSOR ROOF TRUSS
- T5 MONO-ROOF TRUSS
- T6 ATTIC STORAGE ROOF TRUSS
- T7 ATTIC ROOM ROOF TRUSS
- T8 VAULTED ROOF TRUSS
- T9 CUSTOM-SCISSOR/FLAT ROOF TRUSS
- T10 HIP ROOF TRUSS

BUILDER IS TO VERIFY THAT TRUSS MANUFACTURER'S SEALED ENGINEERING INCLUDES TRUSS DESIGN, PLACEMENT PLANS, TEMPORARY AND PERMANENT BRACING DETAILS, TRUSS-TO-TRUSS CONNECTIONS, AND UPLIFT AND REACTION LOADS FOR ALL BEARING LOCATIONS. SELECT UPLIFT CONNECTIONS AND PROVIDE FOOTINGS FOR INTERIOR BEARING WALLS BASED ON TRUSS ENGINEERING REACTIONS. FURNISH TRUSS ENGINEERING TO WIND LOAD ENGINEER FOR REVIEW OF TRUSS REACTIONS.

TRUSS ENGINEERING WAS NOT AVAILABLE FOR REVIEW WHEN THIS WAS SEALED.

BOTTOM CHORD TRUSS NOTE @ 16":

BOTTOM CHORD EXTENDED TRUSSES SUPPLIED THROUGH SOUTHLAND LOG HOMES TO BE DESIGNED AND MANUFACTURED BY TRUSS MANUFACTURER. ALTHOUGH TRUSSES ARE SHOWN AT 16" O.C.,IT IS THE RESPONSIBILITY OF THE TRUSS MANUFACTURER TO DETERMINE TRUSS SPACING AND PLACEMENT.

SCISSOR TRUSS NOTE @ 16":

STANDARD SCISSOR TRUSSES SUPPLIED THROUGH SOUTHLAND LOG HOMES TO BE DESIGNED AND MANUFACTURED BY TRUSS MANUFACTURER. ALTHOUGH TRUSSES ARE SHOWN AT 16" O.C., IT IS THE RESPONSIBILITY OF THE TRUSS MANUFACTURERTO DETERMINE TRUSS SPACING AND PLACEMENT.

GENERAL CONTRACTOR NOTES:

1.) CONTRACTOR TO VERIFY ALL DIMENSIONS BEFORE BEGINNING CONSTRUCTION.

2.) REFER TO SOUTHLAND LOG HOMES' CONSTRUCTION MANUAL FOR FURTHER INSTRUCTIONS.

IMPORTANT NOTES
READ CAREFULLY
FINAL PLANS

WARNING!

This Southland Log Home package has been designed according to the purchase contract specifications and plans and is intended to be constructed in accordance with these plans. All unauthorized deviations become the responsibility of the owner/builder and may result in unsafe conditions in structure or cause it to violate building codes and will void the warranty on this product.

LOG STYLE & PROFILE
ROUND / FLAT

SYP
R/F

6x8 STOCKADE SYP

FINAL PLANS

Contractor is responsible to field verify all dimensions on your job site.

Some areas or local building departments may require sealed construction plans or special details. Contact your local building department to determine if sealed plans are necessary and must notify Seller in writing at least thirty-five (35) days prior to delivery date. Purchaser is responsible for all costs associated with sealed plans. Seller will not be liable for any Change by the engineer who seals the plans. If your plans require "sealing" DO NOT START CONSTRUCTION UNTIL you have received your "sealed" plans from the engineer.)

GARY PIERCE

DELIVERY COUNTY: HARNETT
DELIVERY STATE: NC
SITE ADDRESS: 558 LOOP ROAD
BUNNLEVEL, NC 38323

SOUTHLAND LOG HOMES
800-845-3555 USA
803-781-5128 FAX
7521 BROAD RIVER ROAD
P.O. BOX 1668 IRMO, SC 29063-1668

MODEL:
LEE III

DESIGNER	CUTSHEETS
LBP	- - -
CHECKED BY: PM	CHECKED BY: - - -

PLAN DATE: 08-23-23
DELIVERY DATE: 02-09-24

2301661
PROJECT NUMBER

4.1
SHEET NUMBER

BOTTOM CHORD TRUSS NOTE @ 16":
BOTTOM CHORD EXTENDED TRUSSES SUPPLIED THROUGH SOUTHLAND LOG HOMES TO BE DESIGNED AND MANUFACTURED BY TRUSS MANUFACTURER. ALTHOUGH TRUSSES ARE SHOWN AT 16" O.C.,IT IS THE RESPONSIBILITY OF THE TRUSS MANUFACTURER TO DETERMINE TRUSS SPACING AND PLACEMENT.

SCISSOR TRUSS NOTE @ 16":
STANDARD SCISSOR TRUSSES SUPPLIED THROUGH SOUTHLAND LOG HOMES TO BE DESIGNED AND MANUFACTURED BY TRUSS MANUFACTURER. ALTHOUGH TRUSSES ARE SHOWN AT 16" O.C., IT IS THE RESPONSIBILITY OF THE TRUSS MANUFACTURERTO DETERMINE TRUSS SPACING AND PLACEMENT.

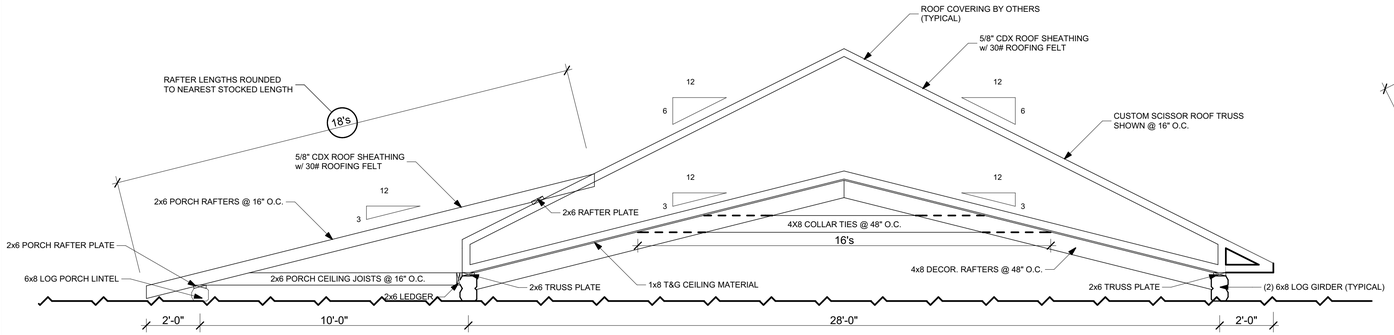

-B- Transverse Section

SCALE: 3/8" = 1'-0"

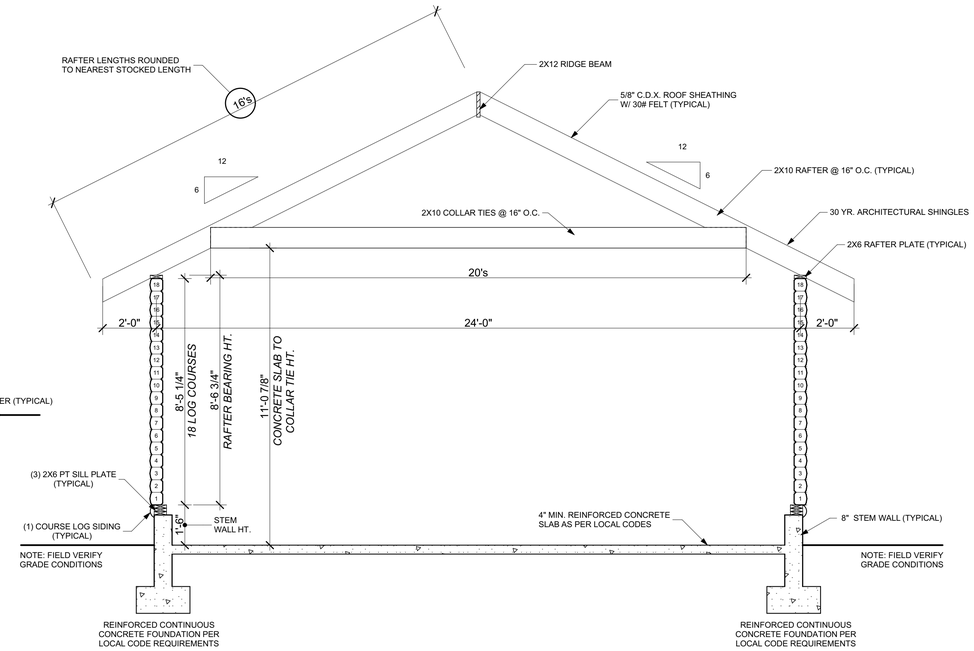

-C- Transverse Section

SCALE: 3/8" = 1'-0"

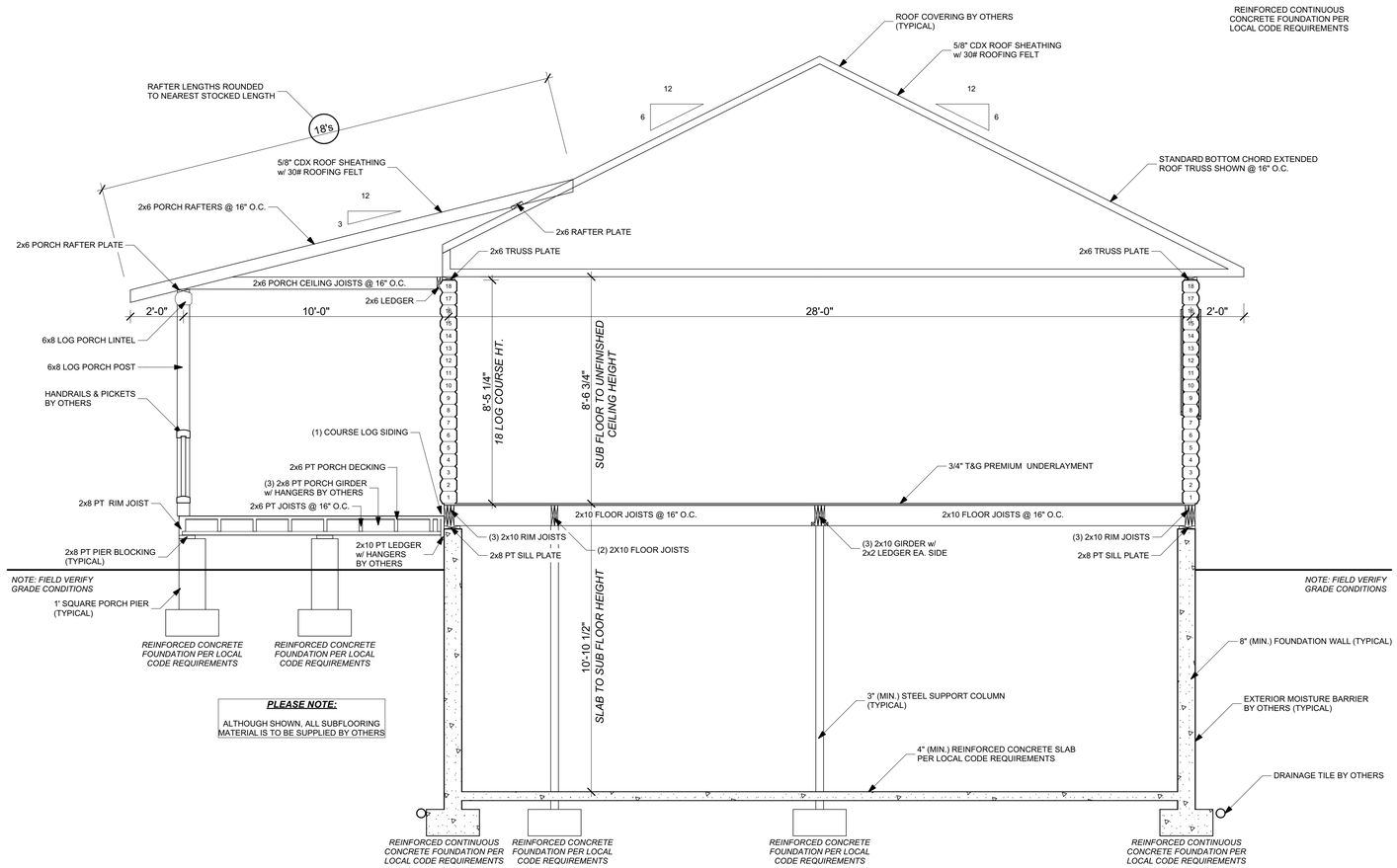

PLEASE NOTE:

ALTHOUGH SHOWN, ALL SUBFLOORING MATERIAL IS TO BE SUPPLIED BY OTHERS

-A- Transverse Section

SCALE: 3/8" = 1'-0"

SHINGLE NOTE:
GAF 30 YR. TIMBERLINE ARCHITECTURAL SHINGLES (GALVALUME) INCLUDED IN ROOFING MATERIALS PER AGREEMENT AS STIPULATED IN CONTRACT.

GENERAL CONTRACTOR NOTES:
1.) CONTRACTOR TO VERIFY ALL DIMENSIONS BEFORE BEGINNING CONSTRUCTION. 2.) REFER TO SOUTHLAND LOG HOMES' CONSTRUCTION MANUAL FOR FURTHER INSTRUCTIONS.

IMPORTANT NOTES
READ CAREFULLY
FINAL PLANS

WARNING!

This Southland Log Home package has been designed according to the purchase contract and applicable building codes, and should be constructed in accordance with these plans. All unauthorized deviations become the responsibility of the owner and may result in unsafe conditions in structure and/or violate building codes and will void the warranty on this product.

LOG STYLE & PROFILE
ROUND / FLAT

SYP
R/F

6x8 STOCKADE SYP

FINAL PLANS

Contractor is responsible to field verify all dimensions on your job site.

Some areas or local building departments may require sealed construction plans and/or energy specifications to insure the proper structural integrity. Contact determine if sealed plans are necessary and must notify Seller in writing at least thirty-five (35) days prior to delivery date. Purchaser is responsible for all costs incurred by Seller to modify the plans if sealed plans are required. Change by the engineer who seals the plans. If your plans require "sealing" DO NOT START CONSTRUCTION UNTIL you have received your "sealed" plans from the engineer.)

GARY PIERCE

DELIVERY COUNTY:	HARNETT
DELIVERY STATE:	NC
SITE ADDRESS:	558 LOOP ROAD BUNNLEVEL, NC 38323

SOUTHLAND LOG HOMES
800-845-3555 USA
803-781-5128 FAX
7521 BROAD RIVER ROAD
P.O. BOX 1668 IRMO, SC 29063-1668

MODEL:
LEE III

DESIGNER	CUTSHEETS
LBP	- - -
CHECKED BY: PM	CHECKED BY: - - -

PLAN DATE: 08-23-23

DELIVERY DATE: 02-09-24

2301661
PROJECT NUMBER

5.1
SHEET NUMBER

1 | 2 | 3 | 4 | 5 | 6 | 7

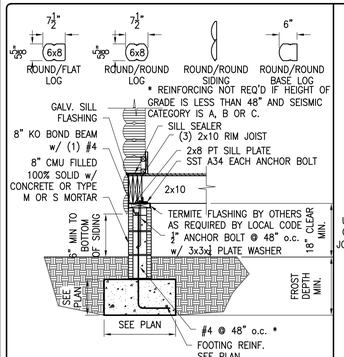

STEM WALL SECTION

1/2" = 1'-0"

LOG WALL:
KILN DRIED SOUTHERN YELLOW PINE w/ 8" OLYLOG FASTENERS COUNTERSUNK ½"

APPLY ⅜"x¾" FOAM GASKET IN GROOVE PRIOR TO SETTING NEXT COURSE

APPLY ½" BEAD OF SOUTHLAND TAN CAULK AT ALL COURSES AND BUTT JOINTS, INSIDE AND OUT PRIOR TO APPLICATION OF FINISH. TOOL CAULK TO ⅜" WIDTH IN HORIZONTAL JOINTS

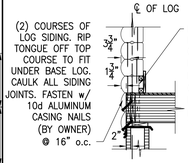

BASE COURSE TO SUBFLOOR

1/2" = 1'-0"

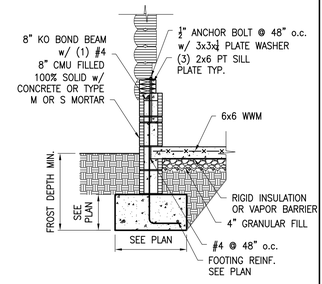

STEM WALL SECTION – GARAGE

1/2" = 1'-0"

* REINFORCING NOT REQ'D IF HEIGHT OF GRADE IS LESS THAN 48" AND SEISMIC CATEGORY IS A, B OR C.

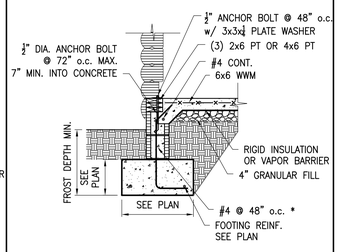

SLAB ON GRADE

1/2" = 1'-0"

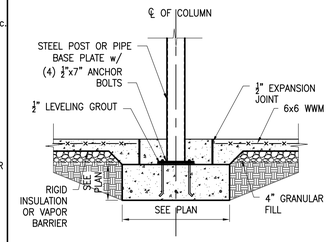

COLUMN FOOTING

1/2" = 1'-0"

* REINFORCING NOT REQ'D IF HEIGHT OF GRADE IS LESS THAN 48" AND SEISMIC CATEGORY IS A, B OR C. FOR COVERED PORCH/DECK PROVIDE REINFORCING FOR WIND SPEEDS ABOVE 105 MPH.

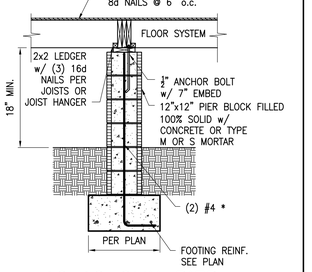

12x12 CMU PIER

1/2" = 1'-0" MAX HEIGHT 10'-0"

* REINFORCING NOT REQ'D IF HEIGHT OF GRADE IS LESS THAN 48" AND SEISMIC CATEGORY IS A, B OR C. FOR COVERED PORCH/DECK PROVIDE REINFORCING FOR WIND SPEEDS ABOVE 105 MPH.

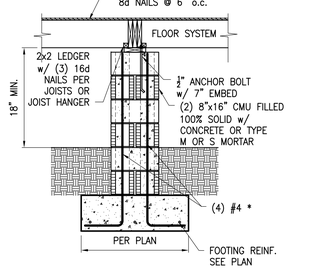

16x16 CMU PIER

1/2" = 1'-0" MAX HEIGHT 13'-4"

* REINFORCING NOT REQ'D IF HEIGHT OF GRADE IS LESS THAN 48" AND SEISMIC CATEGORY IS A, B OR C.

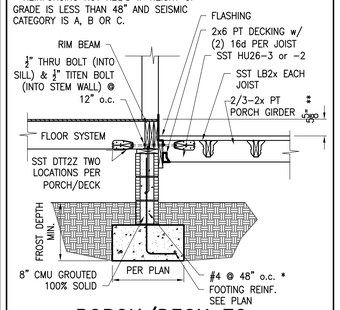

PORCH/DECK TO HOUSE SECTION

1/2" = 1'-0" **OWNER OPTION MAYBE REDUCED FOR ADA OR PREFERENCE

* REINFORCING NOT REQ'D IF HEIGHT OF GRADE IS LESS THAN 48" AND SEISMIC CATEGORY IS A, B OR C.

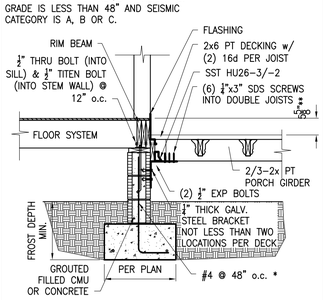

ALT PORCH/DECK TO HOUSE SECTION

1/2" = 1'-0" **OWNER OPTION MAYBE REDUCED FOR ADA OR PREFERENCE

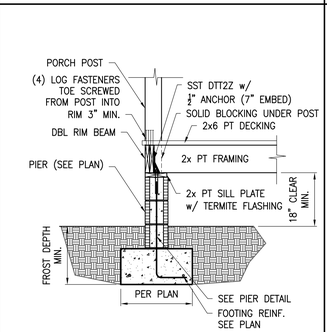

PORCH/DECK TO PIER SECTION

1/2" = 1'-0"

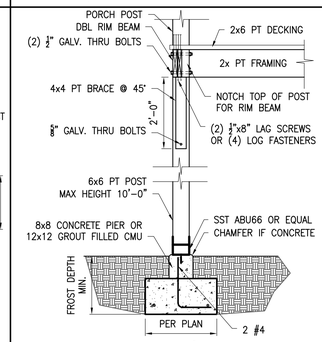

ALT PORCH/DECK TO PIER SECTION

1/2" = 1'-0"

SUBFLOOR @ GIRDER:
¾" T&G UNDERLAYMENT FASTENED TO JOISTS w/ 8d NAILS @ 6" o.c.

FLOOR JOIST: (SEE FOUNDATION PLAN FOR SIZE & SPACING) TOENAIL TO GIRDER w/ (4) 16d NAILS IRC 502.6.2: JOISTS FRAMING INTO THE SIDE OF A WOOD GIRDER SHALL BE SUPPORTED BY APPROVED FRAMING ANCHORS OR ON LEDGER STRIPS NOT LESS THAN NOMINAL 2x2. IRC 502.8: WHERE JOISTS ARE NOTCHED ON THE ENDS FOR A LEDGER. THE NOTCH SHALL NOT EXCEED ⅓TH THE JOIST DEPTH.

BUILT-UP GIRDER: (SEE FOUNDATION PLAN FOR SIZE & NUMBER OF MEMBERS). GLUE & NAIL w/ 16d NAILS @ 32" o.c. TOP & BOTTOM STAGGERED; (2) 16d NAILS @ ENDS & AT EACH SPLICE. STAGGER SPLICES TO HAVE MIN. 24" SPACING.

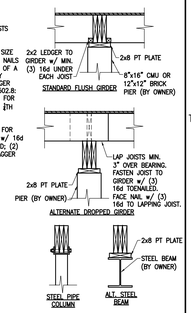

SUBFLOOR @ GIRDER

NTS

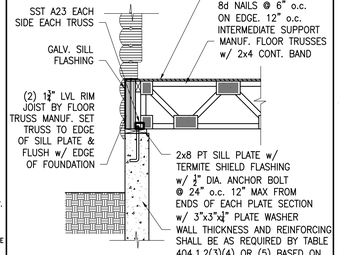

CONCRETE LOAD BEARING WALL BASEMENT

1/2" = 1'-0"

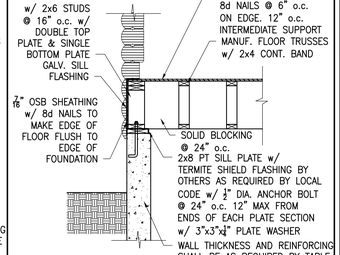

CONCRETE NONLOAD BEARING WALL BASEMENT

1/2" = 1'-0"

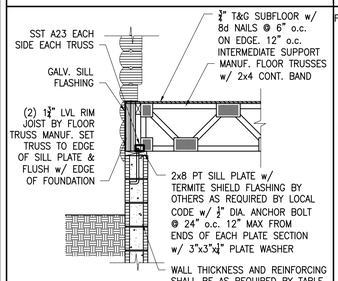

CMU LOAD BEARING WALL BASEMENT

1/2" = 1'-0"

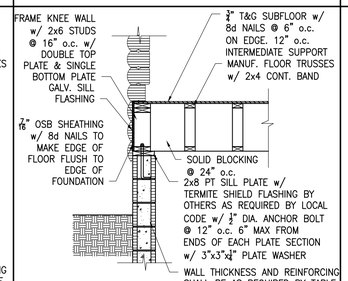

CMU NONLOAD BEARING WALL BASEMENT

1/2" = 1'-0"

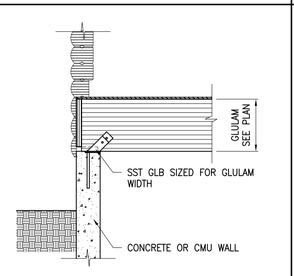

GLULAM BEARING ON WALL

1/2" = 1'-0"

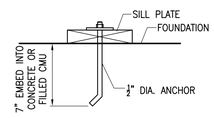

1 STORY SPACING 72" o.c.
2 OR 3 STORY SPACING @ 48" o.c. w/ ½"x3"x3" PLATE WASHER

SEISMIC CATEGORY < C 72" o.c.
SEISMIC CATEGORY ≥ C 48" o.c. w/ ½"x3"x3" PLATE WASHER

ANCHOR BOLT

1 1/2" = 1'-0"

NOTE: ALL CONNECTIONS PER IRC TABLE R602.3. IN HIGH WIND OR SEISMIC ZONES, USE APPROVED FRAMING ANCHORS. ALL FASTENERS & HARDWARE BY OWNER.

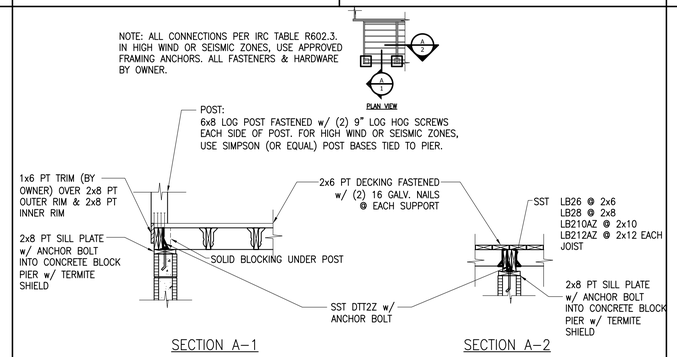

TYP. PORCH DETAILS

NTS

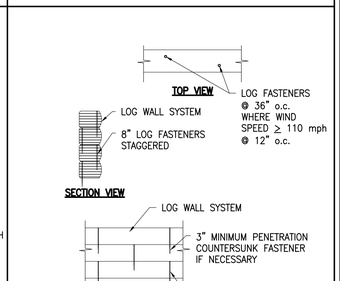

LOG WALL FASTENER PLACEMENT

1/2" = 1'-0"

MINIMUM FASTENING
24" LOG OR LESS – 4 OLYLOGS; 2 EACH END
24"–72" LOG – 6 OLYLOGS; 2 EACH END
OVER 72" LOG; 2 OLYLOGS EACH END & BETWEEN @ 36" o.c. STAGGERED @ 12" o.c. WHERE WIND SPEED ≥ 110 mph

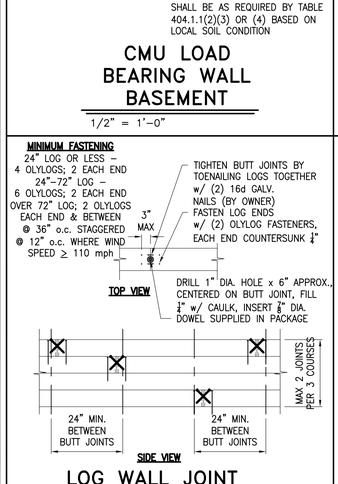

LOG WALL JOINT & SPLICE DETAIL

1/2" = 1'-0"

LOG WALL:
KILN DRIED SOUTHERN YELLOW PINE w/ 8" OLYLOG FASTENERS COUNTERSUNK ½"

APPLY ⅜"x¾" FOAM GASKET IN GROOVE PRIOR TO SETTING NEXT COURSE

APPLY ½" BEAD OF SOUTHLAND TAN CAULK AT ALL COURSES AND BUTT JOINTS, INSIDE AND OUT PRIOR TO APPLICATION OF FINISH. TOOL CAULK TO ⅜" WIDTH IN HORIZONTAL JOINTS.

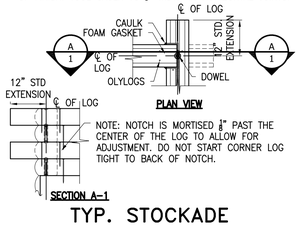

TYP. STOCKADE CORNER

1/2" = 1'-0"

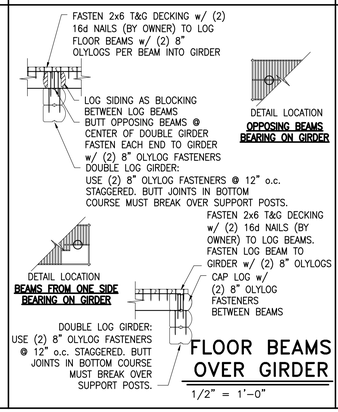

FLOOR BEAMS OVER GIRDER

1/2" = 1'-0"

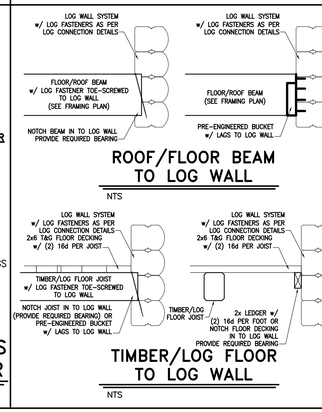

ROOF/FLOOR BEAM TO LOG WALL

NTS

TIMBER/LOG FLOOR TO LOG WALL

NTS

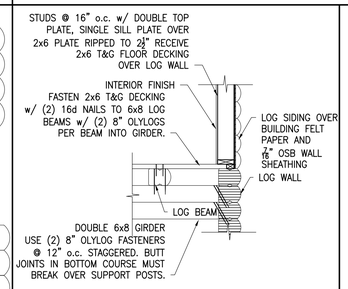

FLOOR BEAM SYSTEM @ FRAMED GABLE END WALL

1/2" = 1'-0"

NOTE:
ALL HARDWARE AND FASTENERS BY OTHERS UNLESS SPECIFIED IN CONTRACT.

CODES

BUILDING CODE:	ICC 400 and 600
BASIS OF DESIGN	ASCE 7–__
FLOOR LOADS	
MAIN LEVEL	40 psf
SLEEPING LEVEL	30 psf
ROOF LOAD	__ psf
WIND SPEED	___ mph ___
SEISMIC CATEGORY	_

IMPORTANT NOTES READ CAREFULLY FINAL PLANS

WARNING!
This Southland Log Home package has been designed according to the purchase contract specifications and plans and is intended to be constructed in accordance with these plans. All unauthorized deviations become the responsibility of others and may result in unsafe conditions in structure and/or violate building codes and will void the warranty on this product.

LOG STYLE & PROFILE
ROUND/FLAT
SYP R/F
6x8 STOCKADE SYP

FINAL PLANS
Contractor is responsible to field verify all dimensions on your job site.
Some areas or local building departments may require sealed construction plans and/or engineering. Southland Log Homes does not provide these services to determine if sealed plans are necessary and must notify Seller in writing at least thirty-five (35) days prior to delivery date. Purchaser is responsible for all fees associated with sealed plans. If plans require "sealing" Change by the engineer who seals the plans. If your plans require "sealing" DO NOT START CONSTRUCTION UNTIL you have received your "sealed" plans from the engineer.)

GARY PIERCE	HARNETT NC
DELIVERY COUNTY:	
DELIVERY STATE:	
SITE ADDRESS:	558 LOOP ROAD BUNNLEVEL, NC 38323

SOUTHLAND LOG HOMES
800-845-3555 USA
803-781-5128 FAX
7521 BROAD RIVER ROAD
P.O. BOX 1668 IRMO, SC 29063-1668

MODEL: LEE III

DESIGNER	CUTSHEETS
LBP	- - -
CHECKED BY: PM	CHECKED BY: - - -

PLAN DATE: 08-23-23
DELIVERY DATE: 02-09-24

2301661
PROJECT NUMBER

6.1s
SHEET NUMBER

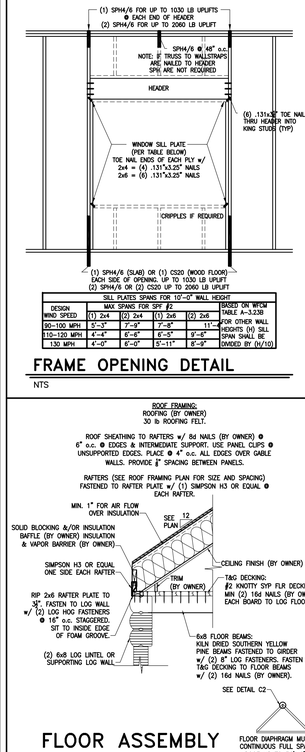

SILL PLATES SPANS FOR 10'-0" WALL HEIGHT					
DESIGN WIND SPEED	MAX SPANS FOR SPF #2 (1) 2x4	(2) 2x4	(1) 2x6	(2) 2x6	BASED ON WFCM TABLE A-3.23B FOR OTHER WALL HEIGHTS (H) SILL SPAN SHALL BE DIVIDED BY (H/10)
90–100 MPH	5'-3"	7'-9"	7'-8"	11'-4"	
110–130 MPH	4'-4"	6'-4"	6'-5"	9'-4"	
130 MPH	4'-0"	6'-0"	5'-11"	8'-9"	

FRAME OPENING DETAIL

NTS

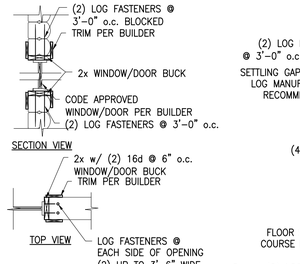

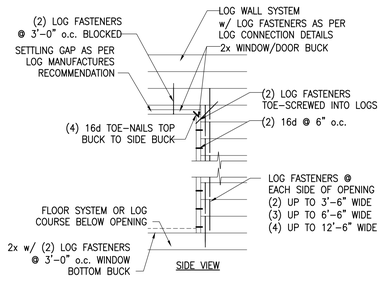

LOG WALL OPENING BUCK DETAIL

1/2" = 1'-0"

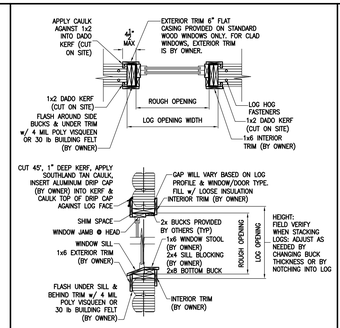

TYP. WINDOW OPENING

NTS

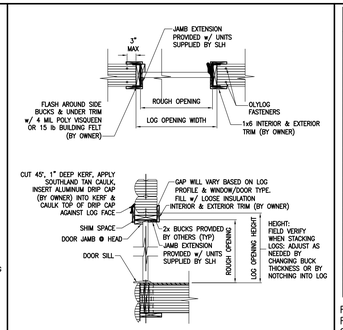

TYP. DOOR OPENING

NTS

HANGER SCHEDULE			
SIZE	TOP FLANGE HANGER	FACE MOUNT HANGER	SLOPED HANGER
2x6	JB26	LUS26	LSU26
(2) 2x6	HUS26–2TF	LUS26–2	---
(3) 2x6	---	LUS26–3	---
(4) 2x6	---	HU66/HUC66	---
2x8	JB28	LUS26	LSSU28
(2) 2x8	HUS28–2TF	LUS26–2	---
(3) 2x8	---	LUS28–3	---
(4) 2x8	---	HU28–4/HUC28–4	---
2x10	JB210A	LUS28	LSSU210
(2) 2x10	HUS210–2TF	LUS28–2	---
(3) 2x10	HU210–3TF	LUS28–3	---
(4) 2x10	---	HU210–4/HUC210–4	---
2x12	JB212A	LUS210	LSSU210
(2) 2x12	HUS212–2TF	LUS210–2	---
(3) 2x12	HU212–3TF	LUS210–3	---
(4) 2x12	HW612	HU612/HUC612	---

REFER TO SIMPSON STRONG TIE LITERATURE FOR REQUIRED FASTENERS.
SIMPSON STRONG TIE UPDATES HANGER MODEL NUMBERS WITHOUT NOTICE --- WHERE THIS OCCURS BUILDER IS TO USE SST RECOMMENDED REPLACEMENT HANGER

SIMPSON STRONG TIE CONNECTORS, UNO.

SAWN LUMBER TO GLULAM ROOF	LSSU210
GLULAM RIDGE BEAM	HD7B
SAWN LUMBER TO RIDGE BEAM	LSTA30
2x10 ROOF AND PORCH RAFTER	HTS20 TO WALL
2x8 ROOF TO PORCH RAFTER	LSSU28 AT WOOD
2x10 ROOF TO PORCH RAFTER	LSSU210 AT WOOD
2x12 ROOF TO PORCH RAFTER	LSSU210 AT WOOD
GIRDER (3)2x10	LUS210–3
GIRDER (3) 2x8	LUS28–3
FLOOR JOIST (2) 2x8	LUS28–2
POST TO FOOTER	HTT5
MULTIPLE SEAT CONNECTOR	MSC

NOTE:
ALL HARDWARE AND FASTENERS BY OTHERS UNLESS SPECIFIED IN CONTRACT.

FLOOR ASSEMBLY AS RAFTER TIE

NTS

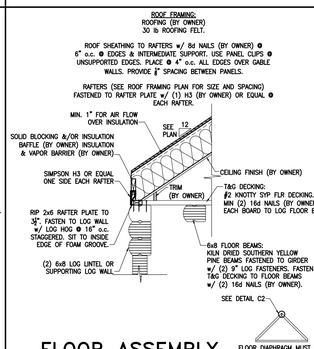

FLOOR ASSEMBLY AS RAFTER TIE

NTS

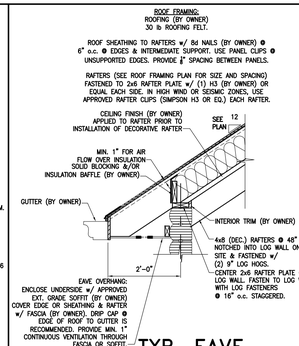

TYP. EAVE OVERHANG

NTS

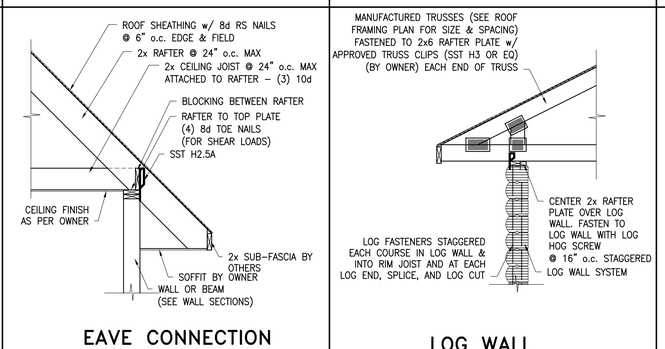

EAVE CONNECTION DETAIL @ FRAMED WALL

1/2" = 1'-0"

LOG WALL & TRUSS ROOF

1/2" = 1'-0"

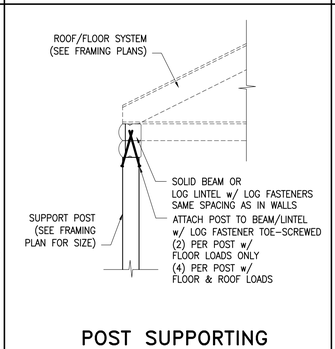

POST SUPPORTING BEAM/LINTEL

1/2" = 1'-0"

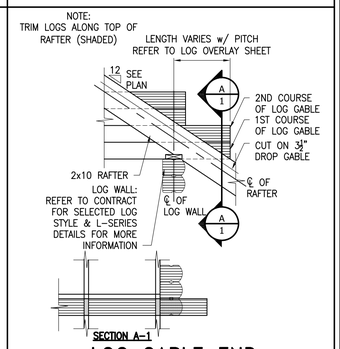

LOG GABLE END: CUT @ ROOF LINE

1/2" = 1'-0"

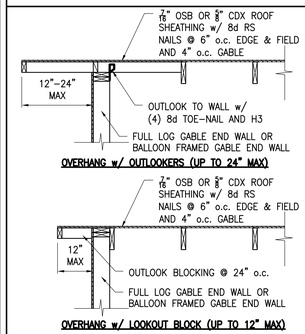

GABLE OVERHANG DETAIL

1/2" = 1'-0"

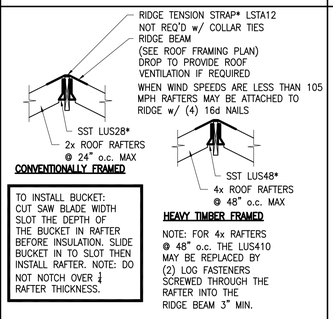

TO INSTALL BUCKET: CUT SAW BLADE WIDTH SLOT THE DEPTH OF THE BUCKET IN RATTER BEFORE INSULATION. SLIDE BUCKET IN TO SLOT THEN INSTALL RAFTER. NOTE: DO NOT NOTCH OVER ⅓ RAFTER THICKNESS.

RIDGE BEAM CONNECTION

1/2" = 1'-0"

* REQUIRED WHERE WIND SPEED EXCEEDS 105 MPH

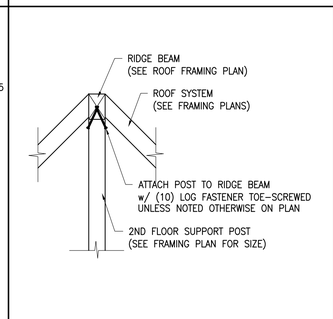

POST TO RIDGE BEAM

1/2" = 1'-0"

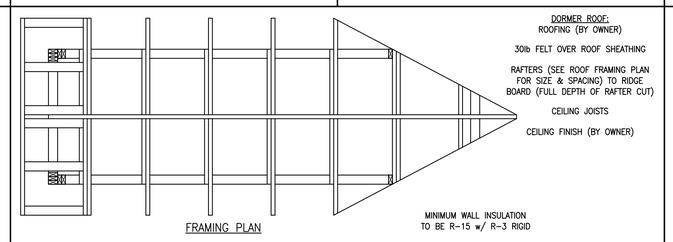

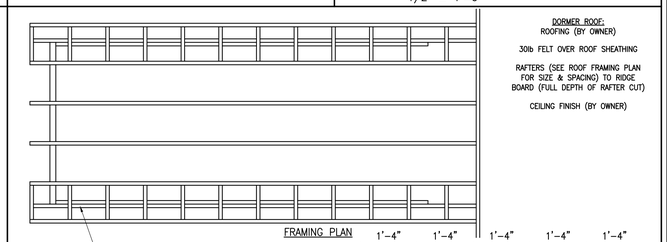

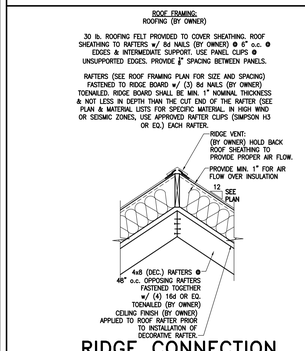

RIDGE CONNECTION @ DECORATIVE RAFTER

NTS

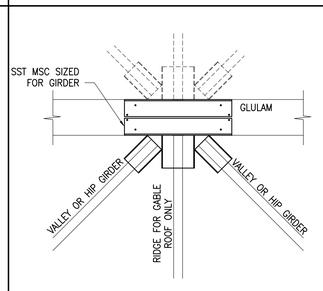

GLULAM VALLEY/HIP GIRDER CONNECTION

NTS

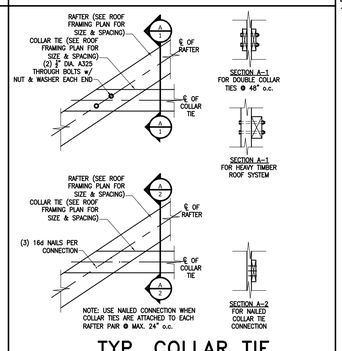

TYP. COLLAR TIE CONNECTIONS

NTS

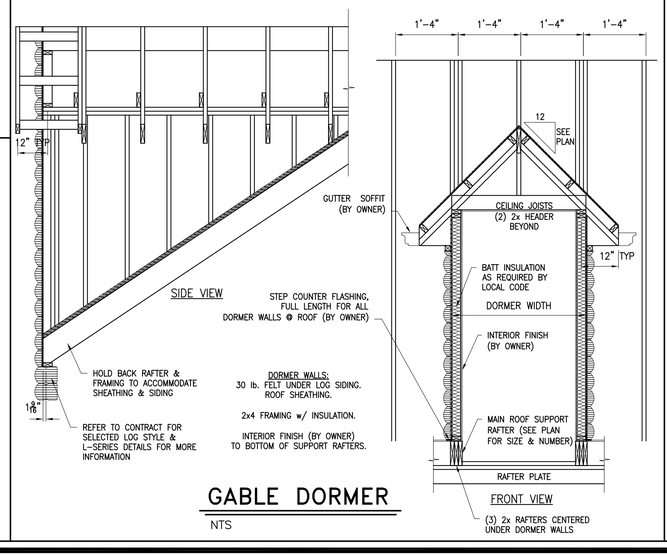

GABLE DORMER

NTS

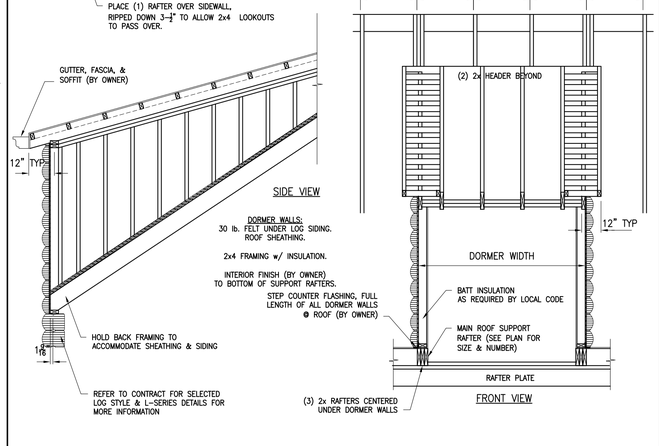

SHED DORMER

NTS

A

IMPORTANT NOTES READ CAREFULLY FINAL PLANS

WARNING!

This Southland Log Home package has been designed according to the purchase contract specifications and plans and is intended to be constructed in accordance with these plans. All unauthorized deviations become the responsibility of the owner. Modifications made in unsafe conditions, structural concerns, violate building codes and will void the warranty on this product.

B

LOG STYLE & PROFILE ROUND/FLAT

SYP R/F

6x8 STOCKADE SYP

FINAL PLANS

Contractor is responsible to field verify all dimensions on your job site.

Some areas or local building departments may require sealed construction plans and/or engineering of residential structures. This may not be the case in your area. Please contact your local building departments to determine if sealed plans are necessary and must notify Seller in writing at least thirty-five (35) days prior to delivery date. Purchaser is responsible for all costs associated with the sealed plans. Purchaser is responsible for any changes to the plans. If your plans require "sealing" Change by the engineer who seals the plans. If your plans require "sealing" DO NOT START CONSTRUCTION UNTIL you have received your "sealed" plans from the engineer.)

C

GARY PIERCE

DELIVERY COUNTY: HARNETT NC
DELIVERY STATE:
SITE ADDRESS: 558 LOOP ROAD BUNNLEVEL, NC 38323

SOUTHLAND LOG HOMES
800-845-3555 USA
803-781-5128 FAX
7521 BROAD RIVER ROAD
P.O. BOX 1668 IRMO, SC 29063-1668

D

MODEL: LEE III

DESIGNER	CUTSHEETS
LBP	- - -
CHECKED BY: PM	CHECKED BY: - - -

PLAN DATE: 08-23-23

DELIVERY DATE: 02-09-24

2301661
PROJECT NUMBER

6.2s
SHEET NUMBER

NOTE:
1. TRIM OUT BOTTOM OF POST WITH 1X BASEBOARD TRIM OR DECORATIVE FLASHING.
2. SEE CONSTRUCTION MANUAL FOR MAINTENANCE REQUIREMENTS & ADJUSTMENTS

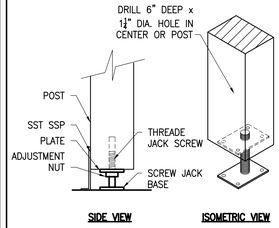

SCREW JACK TO POST
1/2" = 1'-0"

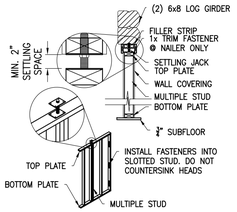

SETTLING JACK DETAIL INTERIOR FRAME WALL
NTS

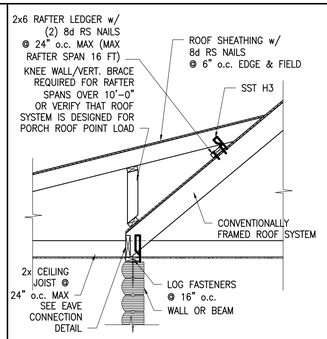

PORCH TO ROOF CONNECTION
1/2" = 1'-0"

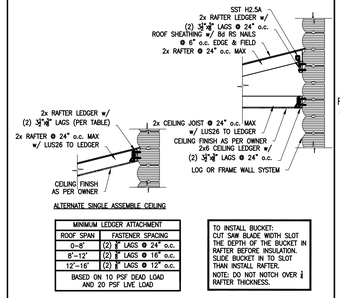

MINIMUM LEDGER ATTACHMENT	
ROOF SPAN	FASTENER SPACING
0–8'	(2) ¾" LAGS @ 24" o.c.
8'–12'	(2) ¾" LAGS @ 16" o.c.
12'–16'	(2) ¾" LAGS @ 12" o.c.
BASED ON 10 PSF DEAD LOAD AND 20 PSF LIVE LOAD	

TO INSTALL BUCKET: CUT SAW BLADE WIDTH SLOT THE DEPTH OF THE BUCKET IN RAFTER BEFORE INSULATION. SLIDE BUCKET IN TO SLOT THAN INSTALL RAFTER.
NOTE: DO NOT NOTCH OVER ¼ RAFTER THICKNESS.

PORCH TO WALL CONNECTION
NTS

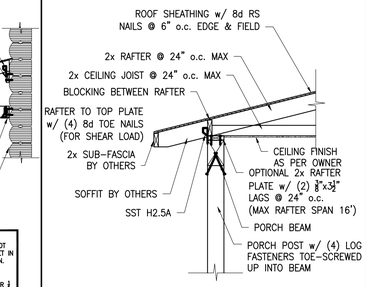

PORCH BEAM CONNECTION
1/2" = 1'-0"

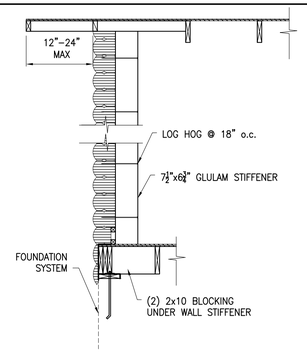

WALL STIFFENER DETAIL
1/2" = 1'-0"

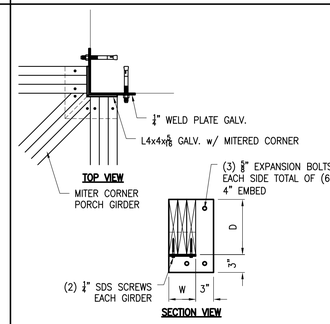

PORCH GIRDER CONNECTION @ CORNER
NTS

PORCH/DECK ASSEMBLY:

1. 2x6 PT SYP #2 DECKING FASTENED w/ (2) 16d GALV. DECK NAILS (OR SCREWS) @ EACH SUPPORT

2. TOENAIL 2x6 PT JOIST @ 16" o.c. w/ (3) 8d GALV. NAILS TO 2x8 PT GIRDER; JOIST BEAR ON 2x2 PT LEDGER

NOTE: ALL CONNECTIONS PER IRC TABLE R602.3. IN HIGH WIND OR SEISMIC ZONES, USE APPROVED FRAMING ANCHORS. ALL FASTENERS & HARDWARE BY OWNER.

REQUIRED GUARDS ON OPEN SIDES OF STAIRWAYS, RAISED FLOOR AREAS, BALCONIES AND PORCHES SHALL HAVE INTERMEDIATE RAILS OR ORNAMENTAL CLOSURES WHICH DO NOT ALLOW PASSAGE OF A SPHERE 4 INCHES OR MORE IN DIAMETER.

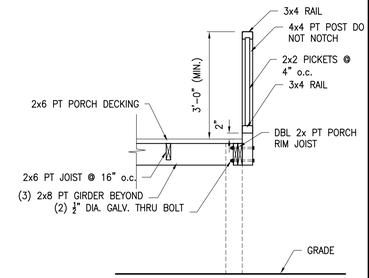

PORCH/DECK GUARDRAILING
NTS

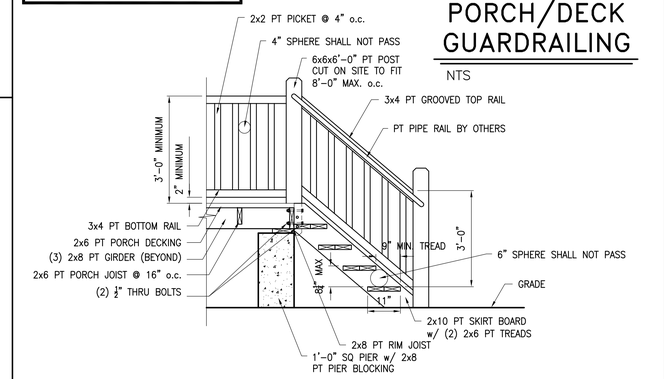

PORCH/DECK GUARDRAIL & STAIR
NTS

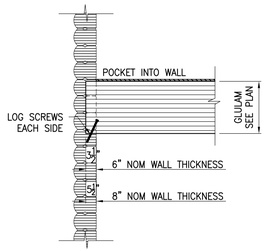

BEAM POCKET INTO LOG WALL
1/2" = 1'-0"

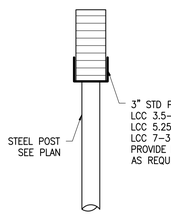

STEEL POST SUPPORT BEAM
NTS

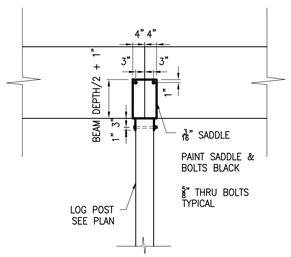

WOOD POST SADDLE
NTS

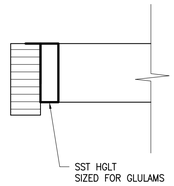

GLULAM TO GLULAM CONNECTION
NTS

NOTE:
ALL HARDWARE AND FASTENERS BY OTHERS UNLESS SPECIFIED IN CONTRACT.

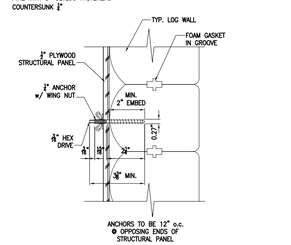

TYP WINDBORNE DEBRIS PROTECTION
NTS WHERE REQUIRED BY LOCAL CODE

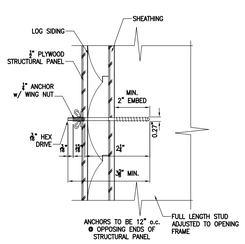

TYP WINDBORNE DEBRIS PROTECTION
NTS WHERE REQUIRED BY LOCAL CODE

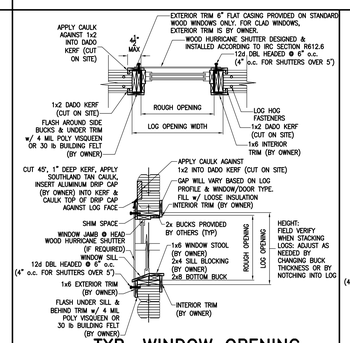

TYP. WINDOW OPENING w/ IMPACT RESISTANT SHUTTERS
NTS WHERE REQUIRED BY LOCAL CODE

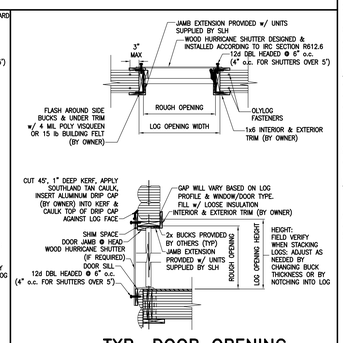

TYP. DOOR OPENING w/ IMPACT RESISTANT SHUTTERS
NTS WHERE REQUIRED BY LOCAL CODE

FOUNDATIONS
SOIL BEARING PRESSURE..... 2,500 psf ASSUMED

STRUCTURAL CONNECTORS:
MANUFACTURERS AND PRODUCT NUMBER FOR CONNECTORS, ANCHORS, AND REINFORCEMENT ARE LISTED FOR EXAMPLE NOT ENDORSEMENT. AN EQUIVALENT DEVICE OF THE SAME OR OTHER MANUFACTURER CAN BE SUBSTITUTED FOR ANY DEVICES LISTED IN THE EXAMPLE TABLES AS LONG AS IT MEETS THE REQUIRED LOAD CAPACITIES. MANUFACTURER'S INSTALLATION INSTRUCTIONS MUST BE FOLLOWED TO ACHIEVE RATED LOADS. ALL CONNECTIONS EXPOSED TO THE WEATHER SHALL HAVE THE MINIMUM FINISH RECOMMENDED BY MANUFACTURE.

NAILS:
ALL NAILS ARE COMMON NAILS UNLESS OTHERWISE SPECIFIED OR ACCEPTED BY CODE APPROVED TEST REPORTS AS HAVING EQUAL STRUCTURAL VALUES.

LOG WALLS:
ALL LOG WALLS ARE MILLED LOGS WITH FLAT STACKING SURFACES. EACH COURSE IS ATTACHED TO THE COURSE BELOW WITH LOG FASTENERS. LOG FASTENERS SHALL BE SPACED AT 36" o.c. (12" o.c. WIND SPEED ≥ 110 mph) AND SHALL PENETRATE 3" MINIMUM INTO SUPPORTING LOG.

INTERIOR STUD WALL:
ALL INTERIOR STUD WALLS ARE NON-LOAD BEARING; UNO. ROOF LOADS TO BE CARRIED ON LOG WALLS OR ROOF BEAMS WITH INTERIOR SUPPORT COLUMNS; UNO. BEARING WALL STUDS TO BE SPF #2; UNO. NON-LOAD BEARING WALL STUDS MAY BE SPF STUD GRADE. ALL PLATES NOTE PROTECTED FROM MOISTURE TO BE SYP #2 PT.

EXTERIOR STUD WALLS:
ALL EXTERIOR STUD WALLS ARE LOAD BEARING SHEAR WALLS WITH SPF #2 STUDS, SYP #2 PT BOTTOM PLATE, SPF #2 DOUBLE TOP PLATE WITH 10-16d NAILS PER LAP SPLICE; SP4, 6-10d "U" STRAP TOP AND BOTTOM AT 48" o.c. UNO; 7/16" OSB OR ⅜" CDX SHEATHING, WITH PANEL EDGES FULLY BLOCKED, FASTENED WITH 8d COMMON NAILS, SPACING 6" o.c. PANEL EDGES, 12" o.c. INTERMEDIATE FRAMING MEMBERS; UNO.

GRADE & SPECIES:

USE PRESSURE TREATED LUMBER WHEN IN CONTACT WITH CONCRETE OR MASONRY.

GLULAM BEAM: 24F-V3 SP, Fb=2400 (psi), E=1.8(10^6 psi); UNO.
LVL BEAM: MICROLAM, Fb=2900 (psi), E=2.0 (10^6 psi); UNO.
LSL BEAM: TIMBERSTRAND, Fb=1700 (psi), E=1.7 (10^6 psi); UNO.
PSL BEAM: PARALAM, Fb=2900 (psi), E=2.0 (10^6 psi); UNO.
SOUTHERN YELLOW PINE (SYP) #2:
2x8, Fb=1200 (psi), E=1.6 (10^6 psi)(TYPICAL); 2x10, Fb=1050 (psi); 2x12, Fb=975 (psi)
SPRUCE PINE FIR (SPF) #2:
2x8, Fb=875 (psi), E=1.4 (10^6 psi)(TYPICAL); 2x10, Fb=875 (psi); 2x12, Fb=875 (psi)

LOG GRADE IS PER ICC400-2012 BASED ON SPECIES SHOW IN LOG PROFILE DETAIL. WALL LOGS ARE A MINIMUM GRADE OF: WALL (LHC) OR WALL 30 (TP); HEADER LOGS ARE A MINIMUM GRADE OF: HEADER (LHC) OR SELECT (TP); LOG BEAMS ARE A MINIMUM GRADE OF: BEAM (LHC) OR PREMIUM (TP). (LHC=LOG HOME COUNCIL, NAHB; TP=TIMBER PRODUCTS INSPECTION, INC.) SUPPLIER MAY SUPPLY AN ALTERNATE BEAM WITH EQUAL PROPERTIES OR MAY SUBMIT THEIR OWN SIZING
LOGS ARE KILN DRIED TO AN AVERAGE MOISTURE CONTENT OF 20%.
PER ICC-400 STRUCTURES ARE CLASSIFIED AS SETTLING. SETTLING JACKS ARE TO BE PROVIDED AT POST AND INTERIOR FRAME WALLS.

CONCRETE:
MINIMUM COMPRESSIVE STRENGTH OF CONCRETE AT 28 DAYS, F'c=3000 PSI. WHERE EXCESS WATER IS ADDED TO THE CONCRETE SO THAT ITS SERVICEABILITY IS DEGRADED, THE ATTAINMENT OF REQUIRED STRENGTH SHALL NOT RELEASE THE CONTRACTOR FROM PROVIDING SUCH MODIFICATIONS AS MAY BE REQUIRED BY THE ENGINEER TO PROVIDE A SERVICEABLE MEMBER OR SURFACE. ALL CONCRETE SHALL BE VIBRATOR. NO REPAIR OR RUBBING OF CONCRETE SURFACES SHALL BE MADE PRIOR TO INSPECTION BY AND APPROVAL OF ENGINEER, OWNER OR HIS REPRESENTATIVE.

WELDED WIRE REINFORCED SLAB:
6"x6" W1.4xW1.4, FB=85 KSI, WELDED WIRE REINFORCEMENT FABRIC (W.W.M.) CONFORMING TO ASTM A185; LOCATED IN MIDDLE OF THE SLAB; SUPPORTED WITH APPROVED MATERIALS OR SUPPORTS AT SPACINGS NOT TO EXCEED 3'.

FIBER CONCRETE SLAB:
IF ALLOWED BY LOCAL CODE FIBER MAY BE SUBSTITUTED FOR WELDED WIRE FABRIC IN SLABS ON GRADE. CONCRETE SLABS ON GROUND CONTAINING SYNTHETIC FIBER REINFORCEMENT. FIBER LENGTH ½ INCH TO 2 INCHES. DOSAGE 1.5 POUNDS PER CUBIC YARD PER THE MANUFACTURER'S RECOMMENDATIONS. FIBERS TO COMPLY WITH ASTM C 1116. SUPPLIER TO PROVIDE ASTM C 1116 CERTIFICATION OF COMPLIANCE WHEN REQUESTED BY BUILDING OFFICIAL.

REBAR:
ASTM A 615, GRADE 60, DEFORMED BARS, FY=60 KSI, ALL LAP SPLICES 40 DB (25" FOR #5 BARS); UNO. ALL REINFORCEMENT SHALL BE DETAILED AND PLACED IN ACCORDANCE WITH ACI 315, U.N.O ALL TENSION DEVELOPMENT LENGTHS SHALL BE 23".

CONCRETE BLOCK:
ASTM C-90 WITH MEDIUM SURFACE FINISH, F'm=1500 PSI.

MORTAR:
TYPE M OR N FOR ALL MASONRY UNITS.

ANCHOR BOLTS:
A-307 ANCHOR BOLTS WITH MINIMUM EMBEDMENT AS SPECIFIED IN DRAWINGS BUT NO LESS THAN 7'.

IMPORTANT NOTES READ CAREFULLY
FINAL PLANS

WARNING!
This Southland Log Home package has been designed according to the purchase contract and applicable building codes, and should be constructed in accordance with these plans. All unauthorized deviations become the responsibility of the owner and may result in unsafe conditions in structure and violate building codes and void the warranty on this product.

LOG STYLE & PROFILE
ROUND/FLAT
SYP R/F
6x8 STOCKADE SYP

FINAL PLANS
Contractor is responsible to field verify all dimensions on your job site.
Some areas or local building departments may require sealed construction plans and/or engineering. Contact your local building department to determine if sealed plans are necessary and must notify Seller in writing at least thirty-five (35) days prior to delivery date. Purchaser is responsible for all costs associated with sealed plans. If your plans require "sealing" Change by the engineer who seals the plans. If your plans require "sealing" DO NOT START CONSTRUCTION UNTIL you have received your "sealed" plans from the engineer.)

GARY PIERCE
DELIVERY COUNTY: HARNETT
DELIVERY STATE: NC
SITE ADDRESS: 558 LOOP ROAD BUNNLEVEL, NC 38323

SOUTHLAND LOG HOMES
800-845-3555 USA
803-781-5126 FAX
7521 BROAD RIVER ROAD
P.O. BOX 1668 IRMO, SC 29063-1668

MODEL: LEE III
DESIGNER: LBP | CUTSHEETS: - - -
CHECKED BY: PM | CHECKED BY: - - -
PLAN DATE: 08-23-23
DELIVERY DATE: 02-09-24

2301661
PROJECT NUMBER

6.3s
SHEET NUMBER

Floor Materials

PLEASE NOTE:
ALL SUBFLOORING MATERIAL IS TO BE SUPPLIED BY OTHERS

Log Wall Materials

Log Walls

Name	Quantity	Unit	Code
6x8 SYP Kiln Dried Cants	3,847.45	lnft	C68Y

Sundries

Name	Quantity	Unit	Code
3/8 x 1/2 Black Foam Tape	140.948	each	HT3812
5/8 Plywood Clips	2.968	each	HC58
9in Log Hog(Cases)	15.557	each	HO9
Caulk-Southland Tan 2001 (cases)	23.461	each	HCST
Dowel 7/8 x 6	352.37	each	HD6
Ext Log Stain, Wood Guard-Honey 2000 (5 gal)	3.605	each	HEWS2000
Galvanized Flashing (10 x 50-0 Roll)	3.927	each	HF10G
Hurricane Ties (100/Box)	2.76	each	HHT
Int Natural Home Finish-Clear (5 gal)	1.572	each	HIF
Screw Jack	8	each	HSJ16J
Silver Oval Tag w/ SLH Logo/ Plant Location/ Number	2	each	LOGTAGS
Sundries Hardware Box	2	each	HBOX
Yard Sign	2	each	YSIGN

Windows/ Doors

Name	Quantity	Unit	Code
3-0 x 3-2 Bronze Clad Single Window	3	each	WC3032B
3-0 x 4-10 Bronze Clad Single Window	3	each	WC30410B
3-0 x 4-10 Bronze Clad Single-Tempered Window	1	each	WC30410BT
3-0 x 4-10 Bronze Clad Twin Window	1	each	WC304102B
3-0 x 6-8 Fiberglass 2-Panel-LI Door	2	each	DHF30HLI
3-0 x 6-8 Fiberglass 2-Panel-RI Door	1	each	DHF30HRI
3-0 x 6-8 Steel 6-Panel 20 Min. F.R. Door-LO Door	1	each	DHS30620MLO

Manufactured Trusses

Name	Quantity	Unit	Code
Common Roof Truss (Full)	14	each	ROOFTRUSSC
Gable End Roof Truss (Full)	2	each	ROOFTRUSSG
Scissor Roof Truss (Full)	14	each	ROOFTRUSSS

Roof/Stud Wall Materials

Name	Quantity	Unit	Code
1x6 #2BTR SYP	151.541	lnft	L16YFB
3/4"x3" Jamb Extensions	123.708	lnft	LJE
Bucks 1 1/2 x 7 1/2 x 3'- 1"	2	each	LWB
Bucks 1 1/2 x 7 1/2 x 3'- 2"	2	each	LWB
Bucks 1 1/2 x 7 1/2 x 3'- 5"	4	each	LWB
Bucks 1 1/2 x 7 1/2 x 3'- 6"	12	each	LWB
Bucks 1 1/2 x 7 1/2 x 5'- 0"	11	each	LWB
Bucks 1 1/2 x 7 1/2 x 6'- 9"	2	each	LWB
Collar Beam 2 x 6 x 9'- 9 1/4"	30	ea.	
Collar Beam 2 x 10 x 19'-11 1/2"	19	ea.	
Collar Beam 4 x 8 x 15'- 0"	5	ea.	
Ledger 2 x 6 x 9'- 4 1/2"	1	ea.	L2614Y
Ledger 2 x 6 x 14'-0"	2	ea.	L2614Y
Overhang Bracing 2 x 4 x 2'- 3 3/4"	15	ea.	L2414S
Overhang Bracing 2 x 4 x 2'- 7 1/2"	16	ea.	L2414S
Overhang Bracing 2 x 4 x 2'- 7 1/4"	10	ea.	L2414S
Overhang Bracing 2 x 4 x 3'- 3 1/4"	25	ea.	L2414S
Rafter 2 x 6 x 17'- 4"	30	ea.	
Rafter 2 x 10 x 15'-11 3/4"	38	ea.	
Rafter 4 x 8 x 14'- 7"	10	ea.	
Rafter Plate 2 x 6 x 9'-11 1/4"	2	ea.	L2614Y
Rafter Plate 2 x 6 x 10'- 7 1/2"	2	ea.	L2614Y
Rafter Plate 2 x 6 x 14'-0"	6	ea.	L2614Y
Ridge Board 2 x 12 x 10'- 0"	1	ea.	
Ridge Board 2 x 12 x 16'-0"	1	ea.	
Siding SYP for 6in Logs 14' Each	1,101.02	lnft	S6Y
Truss Bracing 2 x 4 x 14'-0"	210	lnft	L2414SP
Truss Plate 2 x 6 x 10'- 5 1/2"	2	ea.	L2614Y
Truss Plate 2 x 6 x 13'- 6 1/2"	1	ea.	L2614Y
Truss Plate 2 x 6 x 14'-0"	5	ea.	L2614Y
1x8 White Pine T&G	2,967.66	lnft	L18WTGWB
2x4x105 Interior Stud	102.687	each	L24105S
2x4x14 Interior Stud	12	each	L2414S
2x4x14 Studs(plates)	472.673	lnft	L2414SP
2x4x96 Interior Stud	13.653	each	L2496S
2x6x105 Interior Stud	15.667	each	L26105Y
2x6x14 Studs (plates)	47	lnft	L2614YP
30lb Felt (roll)	22.471	each	RF30
5/8 CDX Plywood	118.775	sheets	SP58C
Hip & Ridge-Rustic Black (Bundle)	1.04	each	RST30RBHR
Shingles-Rustic Black (bundle)	28.488	each	RST30RB
Starter Shingle-Bundle	1.123	each	RSS

CONSTRUCTION PLANS

THIS IS YOUR FINAL SET OF PLANS. CHANGES CANNOT BE MADE.

PROPER MATERIAL STORAGE

Logs and other wood products supplied in the package may begin to season in outdoor storage, causing degrades such as splits, checking and warp. Solid piled material may begin to deteriorate if stored for an extended time in warm weather. The first sign would be mold or stain on the surface, with decay developing later in the center of the bundle. To halt deterioration and minimize degradation, the lumber must be restacked on spacers and allowed to air dry. Interior millwork should be stored in a closed, heated space, and should be delivered to the jobsite as close to the usage time as possible.

PROPER MATERIAL USAGE

The owner/contractor is responsible for verifying that all material cuts are made with the optimum material usage in mind. For example, if you have a 2x10x12' and a 2x10x14' and you should cut both of these from one 2x10x8'-0" piece of lumber. If you use a 10'-0" or larger piece it may result in a material shortage due to excessive scrap. We go to great lengths to optimize our lumber usage so we can give you the best value for your money.

MATERIALS NOTE

NOTE: ALL MATERIALS LISTED IN THIS TAKE-OFF ARE CREATED FROM OUR STATE-OF-THE-ART 3-D DESIGN SOFTWARE USED TO DRAW YOU HOUSE PLANS. THESE LENGTHS ARE EXACT BUT, THE ACTUAL LUMBER LENGTHS SHOWN ON YOUR SHIPPING LIST WILL IN MOST CASES VARY FROM THOSE SHOWN HERE.

GENERAL CONTRACTOR NOTES:

1.) CONTRACTOR TO VERIFY ALL DIMENSIONS BEFORE BEGINNING CONSTRUCTION.

2.) REFER TO SOUTHLAND LOG HOMES' CONSTRUCTION MANUAL FOR FURTHER INSTRUCTIONS.

IMPORTANT NOTES
READ CAREFULLY
FINAL PLANS

WARNING!

This Southland Log Home package has been designed according to the purchase contract specifications and plans and is intended to be constructed in accordance with these plans. All unauthorized deviations become the responsibility of the owner/builder and may result in unsafe conditions, structural concerns, violate building codes and void the warranty on this product.

LOG STYLE & PROFILE
ROUND / FLAT

SYP
R/F

6x8 STOCKADE SYP

FINAL PLANS

Contractor is responsible to field verify all dimensions on your job site.

Some areas or local building departments may require sealed construction plans and/or engineered plans for permit purposes. Contractor is responsible to determine if sealed plans are necessary and must notify Seller in writing at least thirty-five (35) days prior to delivery date. Purchaser is responsible for all costs incurred by Seller to provide sealed plans if required by permit. Change by the engineer who seals the plans. If your plans require "sealing" DO NOT START CONSTRUCTION UNTIL you have received your "sealed" plans from the engineer.)

GARY PIERCE

DELIVERY COUNTY:	HARNETT
DELIVERY STATE:	NC
SITE ADDRESS:	558 LOOP ROAD BUNNLEVEL, NC 38323

SOUTHLAND LOG HOMES
800-845-3555 USA
803-781-5128 FAX
7551 BROAD RIVER ROAD
P.O. BOX 1668 IRMO, SC 29063-1668

MODEL:
LEE III

DESIGNER LBP	CUTSHEETS - - -
CHECKED BY: PM	CHECKED BY: - - -

PLAN DATE:
08-23-23

DELIVERY DATE:
02-09-24

2301661
PROJECT NUMBER

7.1
SHEET NUMBER