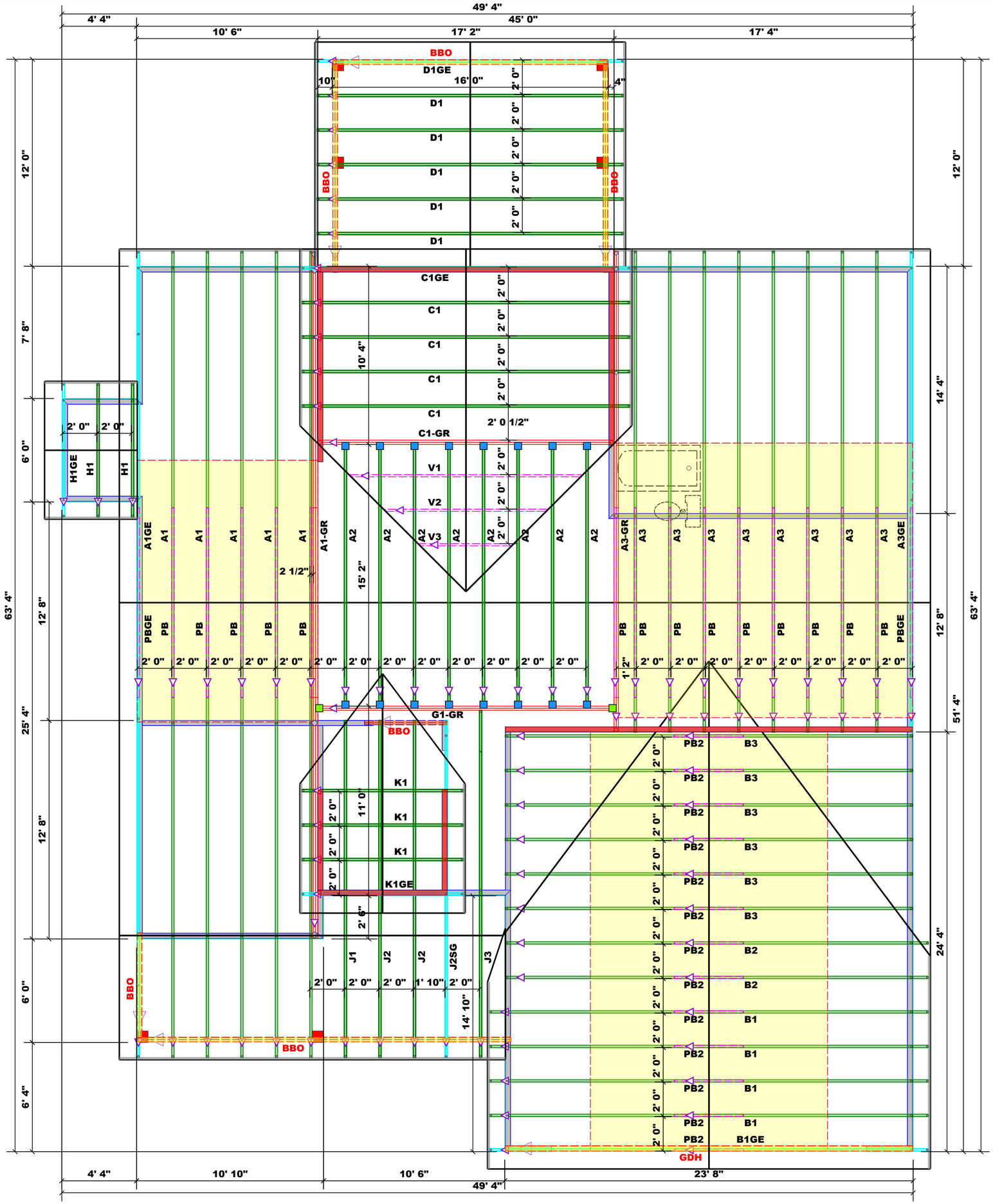

Roof Area = 3502.7 sq.ft.
Ridge Line = 128.6 ft.
Hip Line = 0.47 ft.
Horiz. OH = 194.66 ft.
Raked OH = 230.45 ft.
Decking = 120 sheets

Hatch Legend
2nd Floor Walls
Flush Beam
Drop Beam

Dimension Notes
1. All exterior wall to wall dimensions are to face of sheathing unless noted otherwise
2. All interior wall dimensions are to face of frame wall unless noted otherwise
3. All exterior wall to truss dimensions are to face of frame wall unless noted otherwise

All Walls Shown Are Considered Load Bearing

Plumbing Drop Notes
1. Plumbing drop locations shown are NOT exact.
2. Contractor to verify ALL plumbing drop locations prior to setting Roof Trusses.
3. Adjust spacing as needed not to exceed 24"oc.

Connector Information					Nail Information	
Sym	Product	Manuf	Qty	Supported Member	Header	Truss
	HUS26	USP	16	NA	16d/3-1/2"	16d/3-1/2"
	THD26-2	USP	2	NA	16d/3-1/2"	10d/3"

Products				
PlotID	Length	Product	Plies	Net Qty
GDH	24' 0"	1-3/4"x 14" LVL Kerto-S	2	2

1 Truss Placement Plan
Scale: 1/4"=1'

▲ = Indicates Left End of Truss
(Reference Engineered Truss Drawing)
Do NOT Erect Truss Backwards

COMTECH
ROOF & FLOOR TRUSSES & BEAMS
Reilly Road Industrial Park
Fayetteville, N.C. 28309
Phone: (910) 864-8787
Fax: (910) 864-4444

Bearing reactions less than or equal to 3000# are deemed to comply with the prescriptive Code requirements. The contractor shall refer to the attached Tables (derived from the prescriptive Code requirements) to determine the minimum foundation size and number of wood studs required to support reactions greater than 3000# but not greater than 15000#. A registered design professional shall be retained to design the support system for any reaction that exceeds those specified in the attached Tables. A registered design professional shall be retained to design the support system for all reactions that exceed 15000#.

Signature David Landry

David Landry

LOAD CHART FOR JACK STUDS

(BASED ON TABLES R502.5(1) & (b))

NUMBER OF JACK STUDS REQUIRED @ EA END OF HEADER/GIRDER

END REACTION (#'S TO)	REQ'D STUDS FOR (2) 2"x7" HEADER	END REACTION (#'S TO)	REQ'D STUDS FOR (3) 2"x7" HEADER	END REACTION (#'S TO)	REQ'D STUDS FOR (4) 2"x7" HEADER
1700	1	2550	1	3400	1
3400	2	5100	2	6800	2
5100	3	7650	3	10200	3
6800	4	10200	4	13600	4
8500	5	12750	5	17000	5
10200	6	15300	6		
11900	7				
13600	8				
15300	9				

CITY / CO.	Lillington / Harnett
ADDRESS	Site Address
MODEL	Roof
DATE REV.	06/29/23
DRAWN BY	David Landry
SALES REP.	Neil Baggett
BUILDER	J.W. Sealey
JOB NAME	Lot 108 South Creek
PLAN	Royal
SEAL DATE	Seal Date
QUOTE #	Quote #
JOB #	J0623-3411

THIS IS A TRUSS PLACEMENT DIAGRAM ONLY. These trusses are designed as individual building components to be incorporated into the building design at the specification of the building designer. See individual design sheets for each truss design identified on the placement drawing. The building designer is responsible for temporary and permanent bracing of the roof and floor system and for the overall structure. The design of the truss support structure including headers, beams, walls, and columns is the responsibility of the building designer. For general guidance regarding bracing, consult BCSI-B1 and BCSI-B3 provided with the truss delivery package or online @ sbcindustry.com

Reaction Summary of Order

ComTech
ROOF & FLOOR TRUSSES & BEAMS
Reilly Road Industrial Park P.O. Box 40408
Fayetteville, N.C. 28309 (910) 864-TRUS

REQ. QUOTE DATE	/ /	ORDER #	J0623-3411
ORDER DATE	06/29/23	QUOTE #	
DELIVERY DATE	/ /	CUSTOMER ACCT #	006359
DATE OF INVOICE	/ /	CUSTOMER PO #	
ORDERED BY	Tommy Collins	INVOICE #	
COUNTY	Harnett	TERMS	
SUPERINTENDANT	Tommy Collins	SALES REP	Neil Baggett
JOBSITE PHONE #	(910) 303--5937	SALES AREA	David Landry

SOLD TO
McDonald Lumber Company
126 Cedar Creek Road
Fayetteville, NC 28302
(910) 483-0381

SHIP TO
J.W. Sealey
Lillington, NC

JOB NAME: Lot 108 South Creek **LOT #** 108 **SUBDIV:** South Creek
MODEL: Roof **TAG:** Royal **JOB CATEGORY:** _

DELIVERY INSTRUCTIONS:

SPECIAL INSTRUCTIONS:

PLAN SEAL DATE:

BUILDING DEPARTMENT	OVERHANG INFO		HEEL HEIGHT	00-06-08	REQ. LAYOUTS				REQ. ENGINEERING					BY	DATE
Roof Order	END CUT	RETURN											QUOTE	DTL	06/29/23
													LAYOUT	DTL	06/29/23
	PLUMB	NO	GABLE STUDS	16 IN. OC			JOBSITE	1			JOBSITE	1	CUTTING	DTL	06/29/23

ROOF TRUSSES

LOADING INFORMATION

TCLL-TCDL-BCLL-BCDL	STRESS INCR.
20.0,10.0,0.0,10.0	1.15

ROOF TRUSS SPACING: 24.0 IN. O.C. (TYP.)

PROFILE	QTY / PLY	PITCH TOP	PITCH BOT	TYPE ID	BASE O/A	LUMBER TOP	LUMBER BOT	OVERHANG LEFT	OVERHANG RIGHT	REACTIONS
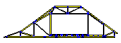	5	4.00	0.00	ATTIC A1	44-11-00 44-11-00	2 X 4	2 X 6	00-11-00	00-11-00	Joint 15 2578.2 lbs. 179.0 lbs. Joint 34 809.9 lbs. -328.4 lbs. Joint 37 2575.6 lbs. -73.0 lbs.
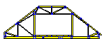	1 / 3 Ply	9.00	0.00	ATTIC GIRDER A1-GR	38-11-00 38-11-00	2 X 6	2 X 12		00-11-00	Joint 13 16281.9 lbs. 93.3 lbs. Joint 18 2890.5 lbs. -2395.1 lbs. Joint 20 10187.2 lbs. 15.3 lbs.
	1	4.00	0.00	GABLE A1GE	44-11-00 44-11-00	2 X 4	2 X 6	00-11-00	00-11-00	Joint 4 455.3 lbs. -12.5 lbs. Joint 23 2292.0 lbs. -76.3 lbs. Joint 45 956.2 lbs. -314.4 lbs. Joint 51 2387.0 lbs. -215.8 lbs.
	8	9.00	0.00	COMMON A2	15-02-00 15-02-00	2 X 6	2 X 6			Joint 3 642.4 lbs. -25.2 lbs. Joint 5 636.7 lbs. -29.6 lbs.
	8	9.00	0.00	ATTIC A3	26-11-08 26-11-08	2 X 6	2 X 6		00-11-00	Joint 10 568.3 lbs. 99.4 lbs. Joint 17 2285.5 lbs. 110.2 lbs. Joint 29 675.8 lbs. 131.0 lbs. Joint 31 501.1 lbs. -135.3 lbs.
	1 / 2 Ply	9.00	0.00	ATTIC A3-GR	26-11-08 26-11-08	2 X 6	2 X 12		00-11-00	Joint 10 754.6 lbs. 99.0 lbs. Joint 13 4431.1 lbs. -41.1 lbs. Joint 15 1423.9 lbs. -44.9 lbs. Joint 18 3964.5 lbs. -265.7 lbs.
	1	9.00	0.00	GABLE A3GE	26-11-08 26-11-08	2 X 6	2 X 6		00-11-00	Joint 16 568.5 lbs. 79.5 lbs. Joint 24 2261.3 lbs. -148.6 lbs. Joint 36 677.0 lbs. 133.4 lbs. Joint 38 499.0 lbs. -228.7 lbs.
	4	12.00	0.00	ATTIC B1	23-07-00 23-07-00	2 X 6	2 X 6	00-11-00	00-11-00	Joint 12 1739.1 lbs. 274.3 lbs. Joint 26 1739.1 lbs. 274.3 lbs.
	1	12.00	0.00	GABLE B1GE	23-07-00 23-07-00	2 X 6	2 X 6	00-11-00	00-11-00	Joint 17 1739.1 lbs. 151.3 lbs. Joint 33 1739.1 lbs. 151.3 lbs.
	2	12.00	0.00	ATTIC B2	23-07-00 23-07-00	2 X 6	2 X 6		00-11-00	Joint 11 1740.2 lbs. 277.5 lbs. Joint 25 1687.5 lbs. 285.1 lbs.
	6	12.00	0.00	ATTIC B3	23-07-00 23-07-00	2 X 6	2 X 6			Joint 10 1688.6 lbs. 288.1 lbs. Joint 24 1688.6 lbs. 286.9 lbs.

Reaction Summary of Order

ComTech
ROOF & FLOOR TRUSSES & BEAMS
Reilly Road Industrial Park P.O. Box 40408
Fayetteville, N.C. 28309 (910) 864-TRUS

REQ. QUOTE DATE	/ /	ORDER #	J0623-3411
ORDER DATE	06/29/23	QUOTE #	
DELIVERY DATE	/ /	CUSTOMER ACCT #	006359
DATE OF INVOICE	/ /	CUSTOMER PO #	
ORDERED BY	Tommy Collins	INVOICE #	
COUNTY	Harnett	TERMS	
SUPERINTENDANT	Tommy Collins	SALES REP	Neil Baggett
JOBSITE PHONE #	(910) 303--5937	SALES AREA	David Landry

SOLD TO
McDonald Lumber Company
126 Cedar Creek Road
Fayetteville, NC 28302
(910) 483-0381

SHIP TO
J.W. Sealey
Lillington, NC

JOB NAME: Lot 108 South Creek **LOT #** 108 **SUBDIV:** South Creek
MODEL: Roof **TAG:** Royal **JOB CATEGORY:** _

DELIVERY INSTRUCTIONS:

SPECIAL INSTRUCTIONS:

PLAN SEAL DATE:

BUILDING DEPARTMENT	OVERHANG INFO		HEEL HEIGHT	00-06-08	REQ. LAYOUTS				REQ. ENGINEERING					BY	DATE
Roof Order	END CUT	RETURN											QUOTE	DTL	06/29/23
													LAYOUT	DTL	06/29/23
	PLUMB	NO	GABLE STUDS	16 IN. OC			JOBSITE	1			JOBSITE	1	CUTTING	DTL	06/29/23

ROOF TRUSSES

LOADING INFORMATION

TCLL-TCDL-BCLL-BCDL	STRESS INCR.
20.0,10.0,0.0,10.0	1.15

ROOF TRUSS SPACING: 24.0 IN. O.C. (TYP.)

PROFILE	QTY / PLY	PITCH TOP	PITCH BOT	TYPE ID	BASE O/A	LUMBER TOP	LUMBER BOT	OVERHANG LEFT	OVERHANG RIGHT	REACTIONS
	4	9.00	0.00	COMMON C1	17-02-00 17-02-00	2 X 6	2 X 6	00-11-00	00-11-00	Joint 2 824.9 lbs. -45.1 lbs.; Joint 4 824.9 lbs. -45.1 lbs.
	1 / 2 Ply	9.00	0.00	COMMON C1-GR	17-02-00 17-02-00	2 X 6	2 X 8	00-11-00	00-11-00	Joint 2 3065.5 lbs. -193.8 lbs.; Joint 4 3077.0 lbs. -194.5 lbs.
	1	9.00	0.00	GABLE C1GE	17-02-00 17-02-00	2 X 6	2 X 6	00-11-00	00-11-00	Joint 2 173.9 lbs. -36.4 lbs.; Joint 10 160.0 lbs. 0.1 lbs.; Joint 12 231.0 lbs. -127.9 lbs.; Joint 13 168.0 lbs. -100.6 lbs.; Joint 14 182.2 lbs. -81.2 lbs.
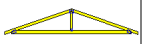	5	4.00	0.00	COMMON D1	15-11-00 15-11-00	2 X 4	2 X 6	00-11-00	00-11-00	Joint 2 689.2 lbs. -262.3 lbs.; Joint 4 689.2 lbs. -262.3 lbs.
	1	4.00	0.00	GABLE D1GE	15-11-00 15-11-00	2 X 4	2 X 6	00-11-00	00-11-00	Joint 2 689.2 lbs. -374.4 lbs.; Joint 8 689.2 lbs. -374.4 lbs.
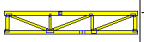	1 / 2 Ply	0.00	0.00	FLAT GIRDER G1-GR	17-02-00 17-02-00	2 X 6	2 X 6			Joint 9 3164.1 lbs. -334.3 lbs.; Joint 13 3115.5 lbs. -316.5 lbs.
	2	9.00	0.00	COMMON H1	05-11-00 05-11-00	2 X 6	2 X 6	00-11-00	00-11-00	Joint 2 280.0 lbs. -21.9 lbs.; Joint 4 280.0 lbs. -21.9 lbs.
	1	9.00	0.00	GABLE H1GE	05-11-00 05-11-00	2 X 6	2 X 6	00-11-00	00-11-00	Joint 2 280.0 lbs. -64.6 lbs.; Joint 6 280.0 lbs. -64.6 lbs.
	1	4.00	0.00	ROOF J1	18-07-08 18-07-08	2 X 4	2 X 6	00-11-00		Joint 2 360.2 lbs. -139.2 lbs.; Joint 6 474.1 lbs. -192.4 lbs.; Joint 8 839.8 lbs. -44.8 lbs.
	2	4.00	0.00	ROOF J2	18-07-08 18-07-08	2 X 4	2 X 6	00-11-00		Joint 2 343.4 lbs. -147.7 lbs.; Joint 9 875.4 lbs. -54.9 lbs.; Joint 11 418.9 lbs. -168.7 lbs.
	1	4.00	0.00	GABLE J2SG	18-07-08 18-07-08	2 X 4	2 X 6	00-11-00		Joint 2 334.5 lbs. -142.4 lbs.; Joint 15 865.4 lbs. -80.3 lbs.; Joint 21 369.8 lbs. -157.7 lbs.

Reaction Summary of Order

ComTech
ROOF & FLOOR TRUSSES & BEAMS
Reilly Road Industrial Park P.O. Box 40408
Fayetteville, N.C. 28309 (910) 864-TRUS

REQ. QUOTE DATE	/ /	ORDER #	J0623-3411
ORDER DATE	06/29/23	QUOTE #	
DELIVERY DATE	/ /	CUSTOMER ACCT #	006359
DATE OF INVOICE	/ /	CUSTOMER PO #	
ORDERED BY	Tommy Collins	INVOICE #	
COUNTY	Harnett	TERMS	
SUPERINTENDANT	Tommy Collins	SALES REP	Neil Baggett
JOBSITE PHONE #	(910) 303--5937	SALES AREA	David Landry

SOLD TO
McDonald Lumber Company
126 Cedar Creek Road
Fayetteville, NC 28302
(910) 483-0381

SHIP TO
J.W. Sealey
Lillington, NC

JOB NAME: Lot 108 South Creek **LOT #** 108 **SUBDIV:** South Creek
MODEL: Roof **TAG:** Royal **JOB CATEGORY:** _

DELIVERY INSTRUCTIONS:

SPECIAL INSTRUCTIONS:

PLAN SEAL DATE:

BUILDING DEPARTMENT	OVERHANG INFO		HEEL HEIGHT	00-06-08	REQ. LAYOUTS				REQ. ENGINEERING					BY	DATE
Roof Order	END CUT	RETURN											QUOTE	DTL	06/29/23
													LAYOUT	DTL	06/29/23
	PLUMB	NO	GABLE STUDS	16 IN. OC			JOBSITE	1			JOBSITE	1	CUTTING	DTL	06/29/23

ROOF TRUSSES

LOADING INFORMATION

TCLL-TCDL-BCLL-BCDL	STRESS INCR.
20.0,10.0,0.0,10.0	1.15

ROOF TRUSS SPACING: 24.0 IN. O.C. (TYP.)

PROFILE	QTY PLY	PITCH TOP	PITCH BOT	TYPE ID	BASE O/A	LUMBER TOP	LUMBER BOT	OVERHANG LEFT	OVERHANG RIGHT	REACTIONS
	1	4.00	0.00	JACK-CLOSED J3	19-02-08 19-02-08	2 X 4	2 X 6	00-11-00		Joint 2 325.3 lbs. -79.4 lbs.; Joint 10 340.0 lbs. -147.0 lbs.; Joint 11 791.8 lbs. -255.7 lbs.
	3	12.00	0.00	COMMON K1	07-06-00 07-06-00	2 X 6	2 X 6	00-11-00	00-11-00	Joint 2 343.9 lbs. -21.6 lbs.; Joint 4 343.9 lbs. -21.6 lbs.
	1	12.00	0.00	GABLE K1GE	07-06-00 07-06-00	2 X 6	2 X 6	00-11-00	00-11-00	Joint 2 138.4 lbs. -26.2 lbs.; Joint 6 138.4 lbs. -8.6 lbs.; Joint 8 198.4 lbs. -149.6 lbs.; Joint 9 108.0 lbs. 29.4 lbs.; Joint 10 200.2 lbs. -151.2 lbs.
	14	9.00	0.00	PIGGYBACK PB	09-07-05 09-07-05	2 X 4	2 X 4			Joint 2 225.5 lbs. -29.2 lbs.; Joint 4 225.5 lbs. -38.2 lbs.; Joint 6 372.0 lbs. 8.5 lbs.
	13	12.00	0.00	PIGGYBACK PB2	02-10-06 02-10-06	2 X 4	2 X 4			Joint 2 93.5 lbs. -31.8 lbs.; Joint 4 93.5 lbs. -37.4 lbs.; Joint 6 88.1 lbs. 7.0 lbs.
	2	9.00	0.00	GABLE PBGE	09-07-05 09-07-05	2 X 4	2 X 4			Joint 2 131.5 lbs. -20.7 lbs.; Joint 6 131.5 lbs. -10.7 lbs.; Joint 8 267.1 lbs. -147.1 lbs.; Joint 9 111.1 lbs. 23.1 lbs.; Joint 10 268.2 lbs. -148.0 lbs.
	1	9.00	0.00	VALLEY V1	13-04-03 13-04-03	2 X 4	2 X 4			Joint 1 100.3 lbs. -22.5 lbs.; Joint 5 83.9 lbs. -0.7 lbs.; Joint 6 330.1 lbs. -109.2 lbs.; Joint 7 251.9 lbs. 51.8 lbs.; Joint 8 330.4 lbs. -109.3 lbs.
	1	9.00	0.00	VALLEY V2	09-04-03 09-04-03	2 X 4	2 X 4			Joint 1 176.4 lbs. -20.8 lbs.; Joint 3 176.3 lbs. -28.2 lbs.; Joint 4 331.3 lbs. 8.2 lbs.
	1	9.00	0.00	VALLEY V3	05-04-03 05-04-03	2 X 4	2 X 4			Joint 1 102.2 lbs. -15.8 lbs.; Joint 3 102.1 lbs. -19.7 lbs.; Joint 4 159.7 lbs. 13.9 lbs.

ITEMS

QTY	ITEM TYPE	SIZE	LENGTH FT-IN-16	PART NUMBER	NOTES
16	Hangers, USP	HUS 26			SIMPSON (HUS26)

Reaction Summary of Order

ComTech
ROOF & FLOOR
TRUSSES & BEAMS
Reilly Road Industrial Park P.O. Box 40408
Fayetteville, N.C. 28309 (910) 864-TRUS

REQ. QUOTE DATE	/ /	**ORDER #**	J0623-3411
ORDER DATE	06/29/23	**QUOTE #**	
DELIVERY DATE	/ /	**CUSTOMER ACCT #**	006359
DATE OF INVOICE	/ /	**CUSTOMER PO #**	
ORDERED BY	Tommy Collins	**INVOICE #**	
COUNTY	Harnett	**TERMS**	
SUPERINTENDANT	Tommy Collins	**SALES REP**	Neil Baggett
JOBSITE PHONE #	(910) 303--5937	**SALES AREA**	David Landry

SOLD TO
McDonald Lumber Company
126 Cedar Creek Road
Fayetteville, NC 28302
(910) 483-0381

SHIP TO
J.W. Sealey
Lillington, NC

JOB NAME: Lot 108 South Creek **LOT #** 108 **SUBDIV:** South Creek
MODEL: Roof **TAG:** Royal **JOB CATEGORY:** _

DELIVERY INSTRUCTIONS:

SPECIAL INSTRUCTIONS:

PLAN SEAL DATE:

BUILDING DEPARTMENT
Roof Order

OVERHANG INFO		**HEEL HEIGHT**	00-06-08	**REQ. LAYOUTS**				**REQ. ENGINEERING**				**QUOTE**	**BY** DTL	**DATE** 06/29/23
END CUT	**RETURN**											**LAYOUT**	DTL	06/29/23
PLUMB	NO	**GABLE STUDS**	16 IN. OC			JOBSITE	1			JOBSITE	1	**CUTTING**	DTL	06/29/23

ITEMS

QTY	ITEM TYPE	SIZE	LENGTH FT-IN-16	PART NUMBER	NOTES
2	Hangers, USP	THD26-2			SIMPSON (HHUS26-2)

ENGINEERING BY TRENCO
A MiTek Affiliate

Trenco
818 Soundside Rd
Edenton, NC 27932

Re: J0623-3411
Lot 108 South Creek

The truss drawing(s) referenced below have been prepared by Truss Engineering Co. under my direct supervision based on the parameters provided by Comtech, Inc - Fayetteville.

Pages or sheets covered by this seal: I59478534 thru I59478564

My license renewal date for the state of North Carolina is December 31, 2023.

North Carolina COA: C-0844

NORTH CAROLINA PROFESSIONAL SEAL 036322 ENGINEER ERIC A. GILBERT

July 12,2023

Gilbert, Eric

IMPORTANT NOTE: The seal on these truss component designs is a certification that the engineer named is licensed in the jurisdiction(s) identified and that the designs comply with ANSI/TPI 1. These designs are based upon parameters shown (e.g., loads, supports, dimensions, shapes and design codes), which were given to MiTek or TRENCO. Any project specific information included is for MiTek's or TRENCO's customers file reference purpose only, and was not taken into account in the preparation of these designs. MiTek or TRENCO has not independently verified the applicability of the design parameters or the designs for any particular building. Before use, the building designer should verify applicability of design parameters and properly incorporate these designs into the overall building design per ANSI/TPI 1, Chapter 2.

Job	Truss	Truss Type	Qty	Ply	Lot 108 South Creek
J0623-3411	A1	ATTIC	5	1	I59478534 Job Reference (optional)

Comtech, Inc, Fayetteville, NC - 28314, 8.430 s Jan 6 2022 MiTek Industries, Inc. Wed Jul 12 07:48:58 2023 Page 1
ID:C5NWnh8QZZzTasfLD?bt5jz_UVZ-RfC?PsB70Hq3NSgPqnL8w3uITXbGKWrCDoi7J4zJC?f

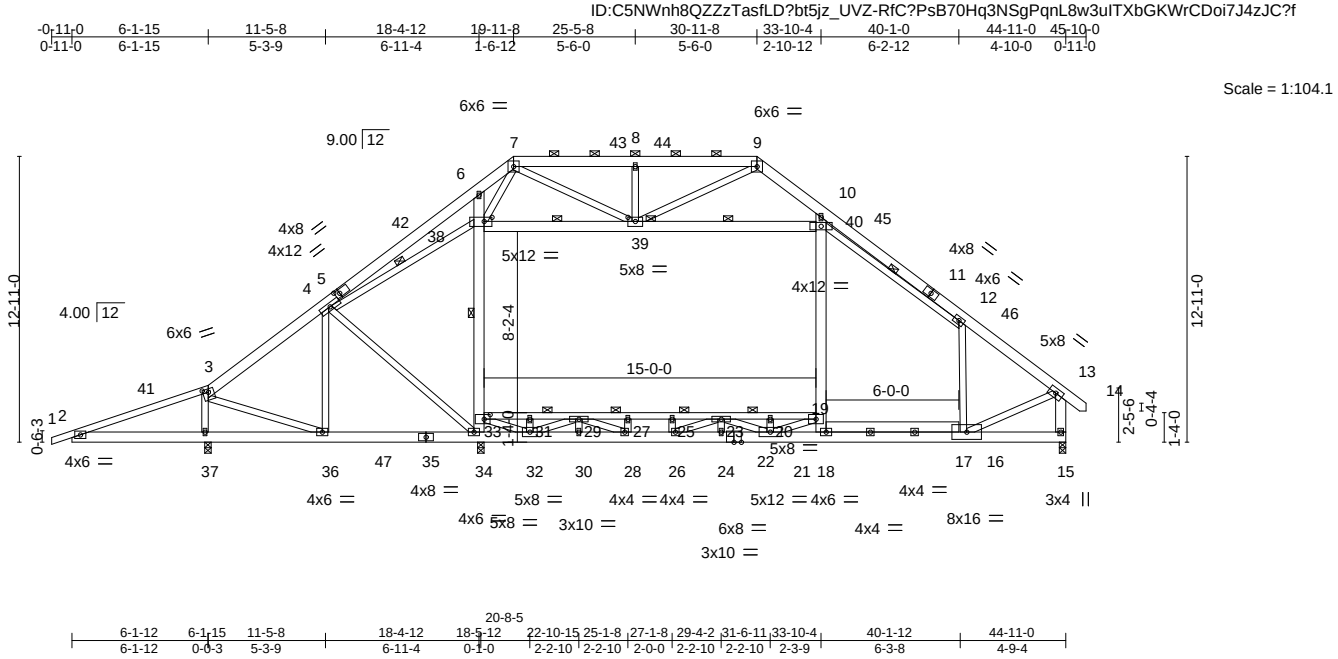

Plate Offsets (X,Y)-- [3:0-3-0,0-1-12], [5:0-2-9,0-2-0], [33:0-3-4,0-2-8], [38:0-4-4,0-2-4], [39:0-4-0,0-2-4]

LOADING (psf)		SPACING- 2-0-0	CSI.		DEFL.	in	(loc)	l/defl	L/d	PLATES	GRIP
TCLL	20.0	Plate Grip DOL 1.15	TC	0.60	Vert(LL)	-0.25	23-25	>999	360	MT20	244/190
TCDL	10.0	Lumber DOL 1.15	BC	1.00	Vert(CT)	-0.48	23-25	>653	240		
BCLL	0.0 *	Rep Stress Incr YES	WB	0.86	Horz(CT)	0.06	15	n/a	n/a		
BCDL	10.0	Code IRC2015/TPI2014	Matrix-S		Wind(LL)	0.05	16	>999	240	Weight: 468 lb	FT = 20%

LUMBER-

TOP CHORD 2x6 SP No.1 *Except*
1-3: 2x4 SP No.1
BOT CHORD 2x6 SP No.1 *Except*
19-33: 2x4 SP No.1
WEBS 2x4 SP No.2 *Except*
6-34,10-18,38-40,13-15: 2x6 SP No.1

BRACING-

TOP CHORD Structural wood sheathing directly applied or 4-5-9 oc purlins, except end verticals, and 2-0-0 oc purlins (6-0-0 max.): 7-9.
BOT CHORD Rigid ceiling directly applied or 10-0-0 oc bracing, Except:
6-0-0 oc bracing: 2-37,36-37,15-16.
3-3-0 oc bracing: 19-33
WEBS 1 Row at midpt 33-38, 38-39, 39-40, 12-40, 4-38
JOINTS 1 Brace at Jt(s): 39

REACTIONS. (size) 37=0-3-8, 34=0-3-8, 15=0-3-8
Max Horz 37=337(LC 11)
Max Uplift 37=-73(LC 8), 34=-328(LC 9)
Max Grav 37=2576(LC 2), 34=810(LC 26), 15=2578(LC 21)

FORCES. (lb) - Max. Comp./Max. Ten. - All forces 250 (lb) or less except when shown.
TOP CHORD 2-3=-401/819, 3-4=-2027/244, 4-6=-509/179, 6-7=-449/412, 7-8=-995/245, 8-9=-996/245, 9-10=-869/179, 10-12=-1725/0, 12-13=-2630/0, 13-15=-2663/0
BOT CHORD 2-37=-721/438, 36-37=-598/429, 34-36=-116/1498, 32-34=0/1323, 30-32=0/4208, 28-30=0/4208, 26-28=0/5132, 24-26=0/4747, 21-24=0/4747, 18-21=0/1810, 16-18=0/2072, 31-33=-722/0, 29-31=-722/0, 27-29=-3172/0, 25-27=-3172/0, 23-25=-3172/0, 20-23=-1697/0, 19-20=-1697/0
WEBS 3-37=-2353/554, 3-36=-433/2091, 4-36=-837/7, 4-34=0/865, 33-34=-703/106, 33-38=-393/499, 6-38=-412/361, 19-40=0/1207, 10-40=-14/765, 38-39=-2093/32, 39-40=-1642/131, 13-16=0/2351, 7-38=-543/17, 7-39=-46/816, 8-39=-335/207, 9-39=-147/320, 27-28=-280/0, 31-32=-329/0, 20-21=-290/0, 12-40=-1268/347, 4-38=-2076/15, 12-16=-528/123, 29-32=-1662/0, 28-29=0/1007, 32-33=0/1709, 19-21=0/2267, 21-23=-1188/0, 23-26=0/419

NOTES-

1) Unbalanced roof live loads have been considered for this design.
2) Wind: ASCE 7-10; Vult=130mph Vasd=103mph; TCDL=6.0psf; BCDL=6.0psf; h=15ft; Cat. II; Exp C; Enclosed; MWFRS (envelope) and C-C Exterior(2) -0-11-0 to 3-6-14, Interior(1) 3-6-14 to 19-11-8, Exterior(2) 19-11-8 to 24-5-6, Interior(1) 24-5-6 to 30-11-8, Exterior(2) 30-11-8 to 35-5-6, Interior(1) 35-5-6 to 45-8-4 zone; end vertical right exposed; porch left exposed;C-C for members and forces & MWFRS for reactions shown; Lumber DOL=1.60 plate grip DOL=1.60
3) Provide adequate drainage to prevent water ponding.
4) All plates are 2x4 MT20 unless otherwise indicated.
5) This truss has been designed for a 10.0 psf bottom chord live load nonconcurrent with any other live loads.
6) * This truss has been designed for a live load of 30.0psf on the bottom chord in all areas where a rectangle 3-6-0 tall by 2-0-0 wide will fit between the bottom chord and any other members, with BCDL = 10.0psf.
7) Ceiling dead load (10.0 psf) on member(s). 38-39, 39-40; Wall dead load (5.0psf) on member(s).33-38, 19-40
8) Bottom chord live load (40.0 psf) and additional bottom chord dead load (10.0 psf) applied only to room. 31-33, 29-31, 27-29, 25-27, 23-25, 20-23, 19-20

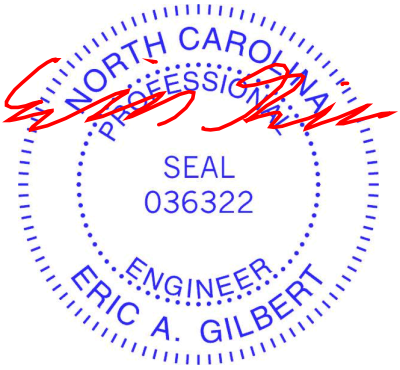

July 12,2023

Continued on page 2

ENGINEERING BY TRENCO A MiTek Affiliate
818 Soundside Road
Edenton, NC 27932

NOTES-

9) Provide mechanical connection (by others) of truss to bearing plate capable of withstanding 73 lb uplift at joint 37 and 328 lb uplift at joint 34.
10) Graphical purlin representation does not depict the size or the orientation of the purlin along the top and/or bottom chord.
11) Attic room checked for L/360 deflection.

Job	Truss	Truss Type	Qty	Ply	Lot 108 South Creek
J0623-3411	A1-GR	ATTIC GIRDER	1	3	I59478535 Job Reference (optional)

Comtech, Inc, Fayetteville, NC - 28314, 8.430 s Jan 6 2022 MiTek Industries, Inc. Wed Jul 12 07:49:10 2023 Page 1
ID:C5NWnh8QZZzTasfLD?bt5jz_UVZ-RfC?PsB70Hq3NSgPqnL8w3uITXbGKWrCDoi7J4zJC?f

5-5-8	12-4-12	13-11-8	19-5-8	24-11-8	27-10-4	34-1-0	38-11-0	39-10-0
5-5-8	6-11-4	1-6-12	5-6-0	5-6-0	2-10-12	6-2-12	4-10-0	0-11-0

Scale = 1:88.1

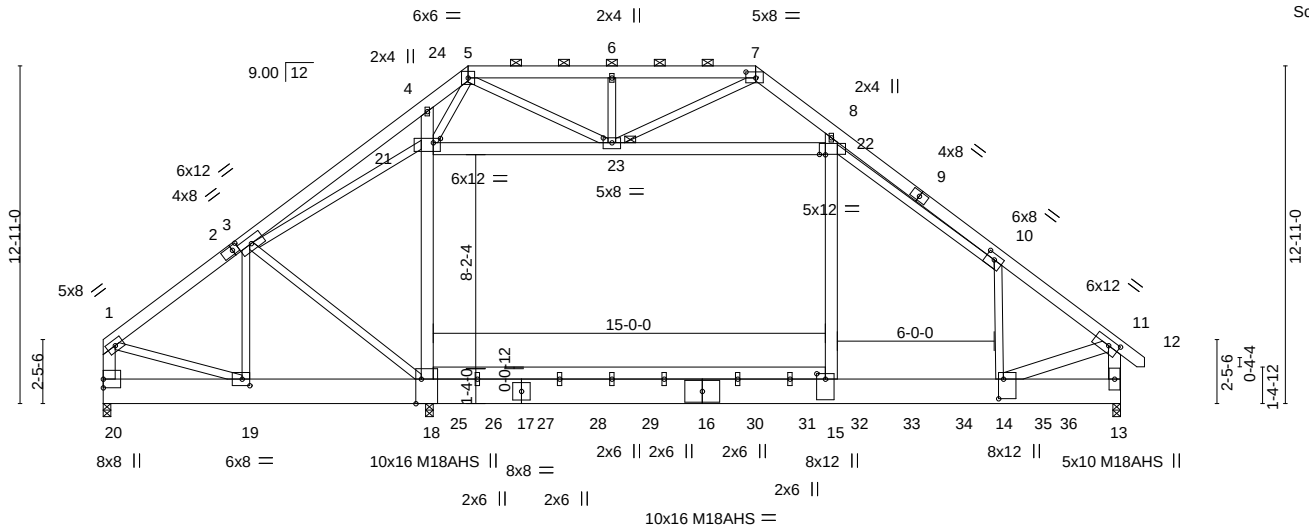

5-5-8	12-4-0	27-10-4	34-1-12	38-11-0
5-5-8	6-10-8	15-6-4	6-3-8	4-9-4

Plate Offsets (X,Y)-- [2:0-2-13,0-2-0], [7:0-4-8,0-2-12], [10:0-4-0,0-2-8], [11:0-4-12,0-2-12], [14:0-9-0,0-2-4], [15:0-2-8,0-4-0], [18:0-11-4,Edge], [19:0-3-8,0-3-0], [21:0-3-4,0-2-0], [22:0-2-12,0-0-3], [23:0-4-0,0-2-4]

LOADING (psf)		SPACING- 2-0-0		CSI.		DEFL.	in	(loc)	l/defl	L/d	PLATES	GRIP
TCLL	20.0	Plate Grip DOL	1.15	TC	0.84	Vert(LL)	-0.50	15-18	>631	360	MT20	244/190
TCDL	10.0	Lumber DOL	1.15	BC	0.85	Vert(CT)	-0.70	15-18	>452	240	M18AHS	186/179
BCLL	0.0 *	Rep Stress Incr	NO	WB	0.97	Horz(CT)	0.04	13	n/a	n/a		
BCDL	10.0	Code IRC2015/TPI2014		Matrix-S		Wind(LL)	0.01	14-15	>999	240	Weight: 1535 lb	FT = 20%

LUMBER-
TOP CHORD 2x6 SP No.1
BOT CHORD 2x12 SP 2400F 2.0E *Except*
15-18: 2x6 SP No.1
WEBS 2x4 SP No.2 *Except*
4-18,8-15,21-22,1-20,11-13,11-14: 2x6 SP No.1

REACTIONS. (size) 20=0-3-8, 18=0-3-8, 13=0-3-8 (req. 0-4-8)
Max Horz 20=-261(LC 4)
Max Uplift 18=-2395(LC 14)
Max Grav 20=10187(LC 14), 18=2891(LC 34), 13=16282(LC 14)

BRACING-
TOP CHORD Structural wood sheathing directly applied or 6-0-0 oc purlins, except end verticals, and 2-0-0 oc purlins (6-0-0 max.): 5-7.
BOT CHORD Rigid ceiling directly applied or 10-0-0 oc bracing.
JOINTS 1 Brace at Jt(s): 23

PLY-TO-PLY CONNECTION REQUIRES THAT AN APPROVED FACE MOUNT HANGER (SPECIFIED BY OTHERS) IS REQUIRED AT JOINT 24 FOR LOAD REPORTED IN NOTES. FACE MOUNT HANGER SHALL BE ATTACHED WITH A MINIMUM OF 0.25"x 4.5" SCREWS OR OTHER FASTENERS THAT PENETRATES ALL PLIES, PER HANGER MANUFACTURER SPECIFICATIONS.

FORCES. (lb) - Max. Comp./Max. Ten. - All forces 250 (lb) or less except when shown.
TOP CHORD 1-3=-10501/53, 3-4=-4976/116, 4-5=-5264/466, 5-6=-2737/145, 6-7=-2738/144, 7-8=-2153/112, 8-10=-5413/0, 10-11=-17416/0, 1-20=-9120/31, 11-13=-16198/0
BOT CHORD 19-20=-214/676, 18-19=0/8336, 15-18=0/14175, 14-15=0/14022
WEBS 3-19=-6619/0, 3-18=-12/7535, 18-21=-1889/5935, 4-21=-1686/371, 15-22=0/9269, 8-22=-47/2948, 21-23=-11451/478, 22-23=-12121/98, 1-19=0/8130, 10-14=-366/268, 11-14=0/14968, 3-21=-11343/60, 10-22=-11818/118, 5-23=-349/575, 7-23=-69/849, 5-21=-1198/2074

NOTES-
1) N/A
2) 3-ply truss to be connected together as follows:
Top chords connected with 10d (0.131"x3") nails as follows: 2x6 - 3 rows staggered at 0-4-0 oc.
Bottom chords connected with 10d (0.131"x3") nails as follows: 2x12 - 3 rows staggered at 0-5-0 oc.
Web connected with 10d (0.131"x3") nails as follows: 2x4 - 1 row at 0-9-0 oc, 2x6 - 2 rows staggered at 0-9-0 oc.
3) All loads are considered equally applied to all plies, except if noted as front (F) or back (B) face in the LOAD CASE(S) section. Ply to ply connections have been provided to distribute only loads noted as (F) or (B), unless otherwise indicated.
4) Unbalanced roof live loads have been considered for this design.
5) Wind: ASCE 7-10; Vult=130mph Vasd=103mph; TCDL=6.0psf; BCDL=6.0psf; h=15ft; Cat. II; Exp C; Enclosed; MWFRS (envelope); Lumber DOL=1.60 plate grip DOL=1.60
6) Provide adequate drainage to prevent water ponding.
7) All plates are MT20 plates unless otherwise indicated.
8) The Fabrication Tolerance at joint 18 = 12%
9) This truss has been designed for a 10.0 psf bottom chord live load nonconcurrent with any other live loads.
10) * This truss has been designed for a live load of 30.0psf on the bottom chord in all areas where a rectangle 3-6-0 tall by 2-0-0 wide will fit between the bottom chord and any other members, with BCDL = 10.0psf.
11) Ceiling dead load (10.0 psf) on member(s). 21-23, 22-23; Wall dead load (5.0psf) on member(s).18-21, 15-22
12) Bottom chord live load (40.0 psf) and additional bottom chord dead load (10.0 psf) applied only to room. 15-18
13) WARNING - Required bearing size at joint(s) 13 greater than input bearing size.

Continued on page 2

NORTH CAROLINA PROFESSIONAL SEAL 036322 ENGINEER ERIC A. GILBERT

July 12,2023

ENGINEERING BY TRENCO A MiTek Affiliate
818 Soundside Road
Edenton, NC 27932

NOTES-

14) Provide mechanical connection (by others) of truss to bearing plate capable of withstanding 2395 lb uplift at joint 18.
15) Graphical purlin representation does not depict the size or the orientation of the purlin along the top and/or bottom chord.
16) Hanger(s) or other connection device(s) shall be provided sufficient to support concentrated load(s) 3088 lb down and 345 lb up at 13-4-0 on top chord, and 364 lb down at 13-5-4, 364 lb down at 14-9-4, 364 lb down at 16-9-4, 1421 lb down at 18-9-4, 1735 lb down at 20-9-4, 1735 lb down at 22-9-4, 1735 lb down at 24-9-4, 1735 lb down at 26-9-4, 1735 lb down at 28-9-4, 1735 lb down at 30-9-4, 1735 lb down at 32-9-4, and 1735 lb down at 34-9-4, and 1735 lb down at 36-9-4 on bottom chord. The design/selection of such connection device(s) is the responsibility of others.
17) Attic room checked for L/360 deflection.

LOAD CASE(S) Standard

1) Dead + Roof Live (balanced): Lumber Increase=1.15, Plate Increase=1.15
   Uniform Loads (plf)
   Vert: 1-5=-60, 5-7=-60, 7-11=-60, 11-12=-60, 18-20=-20, 15-18=-40, 13-15=-20, 21-22=-20
   Drag: 18-21=-10, 15-22=-10
   Concentrated Loads (lb)
   Vert: 16=-459(F) 24=-3056(F) 25=-85(F) 26=-85(F) 27=-85(F) 28=-388(F) 29=-459(F) 30=-459(F) 31=-459(F) 32=-459(F) 33=-459(F) 34=-459(F) 35=-459(F) 36=-459(F)

Job	Truss	Truss Type	Qty	Ply	Lot 108 South Creek
J0623-3411	A1GE	GABLE	1	1	I59478536
					Job Reference (optional)

Comtech, Inc, Fayetteville, NC - 28314, 8.430 s Jan 6 2022 MiTek Industries, Inc. Wed Jul 12 07:49:03 2023 Page 1

ID:C5NWnh8QZZzTasfLD?bt5jz_UVZ-RfC?PsB70Hq3NSgPqnL8w3uITXbGKWrCDoi7J4zJC?f

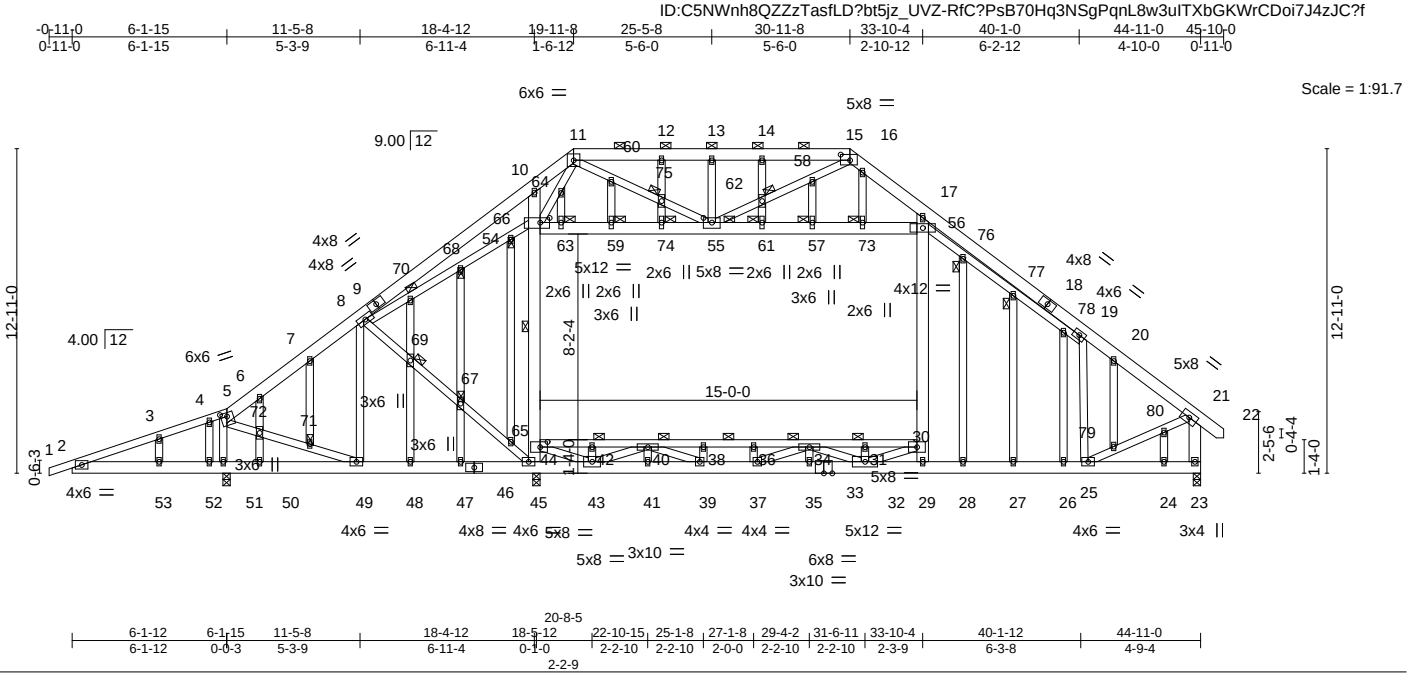

Plate Offsets (X,Y)-- [5:0-3-0,0-1-12], [15:0-4-8,0-2-12], [44:0-3-8,0-2-8], [54:0-4-8,0-2-4], [55:0-4-0,0-2-4]

LOADING (psf)		SPACING- 2-0-0		CSI.		DEFL.	in	(loc)	l/defl	L/d	PLATES	GRIP
TCLL	20.0	Plate Grip DOL	1.15	TC	0.60	Vert(LL)	-0.24	34-36	>999	360	MT20	244/190
TCDL	10.0	Lumber DOL	1.15	BC	0.99	Vert(CT)	-0.47	34-36	>676	240		
BCLL	0.0 *	Rep Stress Incr	YES	WB	0.79	Horz(CT)	0.06	23	n/a	n/a		
BCDL	10.0	Code IRC2015/TPI2014		Matrix-S		Wind(LL)	0.10	26-27	>999	240	Weight: 554 lb	FT = 20%

LUMBER-

TOP CHORD 2x6 SP No.1 *Except*
1-5: 2x4 SP No.1

BOT CHORD 2x6 SP No.1 *Except*
30-44: 2x4 SP No.1

WEBS 2x4 SP No.2 *Except*
10-45,17-29,54-56,21-23: 2x6 SP No.1

OTHERS 2x4 SP No.2

BRACING-

TOP CHORD Structural wood sheathing directly applied or 4-7-3 oc purlins, except end verticals, and 2-0-0 oc purlins (6-0-0 max.): 11-15.

BOT CHORD Rigid ceiling directly applied or 6-0-0 oc bracing. Except: 3-3-0 oc bracing: 30-44

WEBS 1 Row at midpt 44-54

JOINTS 1 Brace at Jt(s): 55, 57, 59, 61, 62, 63, 66, 67, 68, 69, 70, 71, 73, 74, 75, 76, 77

REACTIONS. (size) 51=0-3-8, 45=0-3-8, 23=0-3-8
Max Horz 51=371(LC 9)
Max Uplift 51=-216(LC 13), 45=-314(LC 9), 23=-76(LC 13)
Max Grav 51=2387(LC 2), 45=956(LC 20), 23=2292(LC 21)

FORCES. (lb) - Max. Comp./Max. Ten. - All forces 250 (lb) or less except when shown.

TOP CHORD 2-3=-415/738, 3-4=-359/740, 4-5=-319/665, 5-6=-1709/185, 6-7=-1937/252, 7-8=-1815/262, 8-10=-777/306, 10-11=-731/525, 11-12=-1029/313, 12-13=-1029/313, 13-14=-1029/313, 14-15=-1031/313, 15-16=-868/193, 16-17=-1053/183, 17-19=-1807/0, 19-20=-2136/94, 20-21=-2375/37, 21-23=-2322/88

BOT CHORD 2-53=-671/433, 52-53=-671/433, 51-52=-671/433, 50-51=-578/566, 49-50=-578/566, 48-49=-13/1365, 47-48=-13/1365, 45-47=-13/1365, 43-45=-41/1124, 41-43=0/3965, 39-41=0/3965, 37-39=0/4874, 35-37=0/4509, 32-35=0/4509, 29-32=0/1630, 28-29=0/1863, 27-28=0/1863, 26-27=0/1863, 25-26=0/1863, 42-44=-766/0, 40-42=-766/0, 38-40=-3223/0, 36-38=-3223/0, 34-36=-3223/0, 31-34=-1748/0, 30-31=-1748/0

WEBS 5-51=-1790/261, 5-72=-372/2044, 71-72=-345/1890, 49-71=-353/1925, 8-49=-600/172, 8-69=-205/744, 67-69=-208/713, 65-67=-203/699, 45-65=-201/825, 44-45=-835/225, 44-54=-409/504, 10-54=-444/422, 30-56=0/1012, 17-56=-17/697, 54-63=-1759/140, 59-63=-1759/140, 59-74=-1759/140, 55-74=-1759/140, 55-61=-1322/364, 57-61=-1322/364, 57-73=-1322/364, 56-73=-1322/364, 25-79=0/2184, 79-80=0/2067, 21-80=0/2045, 54-64=-437/125, 11-64=-432/224, 11-60=-177/759, 60-75=-169/708, 55-75=-171/726, 38-39=-279/0, 42-43=-326/0, 31-32=-287/0, 56-76=-967/495, 76-77=-1014/493, 77-78=-1003/488, 19-78=-830/424, 8-70=-1529/57, 68-70=-1642/66, 66-68=-1618/59, 54-66=-1523/57, 19-25=-400/0, 40-43=-1686/0, 39-40=0/990, 43-44=0/1721, 30-32=0/2279, 32-34=-1209/0, 34-37=0/398, 69-70=-252/18, 6-72=-486/181, 4-52=-345/117, 26-78=-463/117, 20-79=0/257

NOTES-

1) Unbalanced roof live loads have been considered for this design.
2) Wind: ASCE 7-10; Vult=130mph Vasd=103mph; TCDL=6.0psf; BCDL=6.0psf; h=15ft; Cat. II; Exp C; Enclosed; MWFRS (envelope) gable end zone and C-C Exterior(2) zone;C-C for members and forces & MWFRS for reactions shown; Lumber DOL=1.60 plate grip DOL=1.60

July 12,2023

Continued on page 2

ENGINEERING BY TRENCO A MiTek Affiliate
818 Soundside Road
Edenton, NC 27932

NOTES-

3) Truss designed for wind loads in the plane of the truss only. For studs exposed to wind (normal to the face), see Standard Industry Gable End Details as applicable, or consult qualified building designer as per ANSI/TPI 1.
4) Provide adequate drainage to prevent water ponding.
5) All plates are 2x4 MT20 unless otherwise indicated.
6) Gable studs spaced at 2-0-0 oc.
7) This truss has been designed for a 10.0 psf bottom chord live load nonconcurrent with any other live loads.
8) * This truss has been designed for a live load of 30.0psf on the bottom chord in all areas where a rectangle 3-6-0 tall by 2-0-0 wide will fit between the bottom chord and any other members.
9) Ceiling dead load (10.0 psf) on member(s). 54-63, 59-63, 59-74, 55-74, 55-61, 57-61, 57-73, 56-73; Wall dead load (5.0psf) on member(s).44-54, 30-56
10) Bottom chord live load (40.0 psf) and additional bottom chord dead load (10.0 psf) applied only to room. 42-44, 40-42, 38-40, 36-38, 34-36, 31-34, 30-31
11) Provide mechanical connection (by others) of truss to bearing plate capable of withstanding 216 lb uplift at joint 51, 314 lb uplift at joint 45 and 76 lb uplift at joint 23.
12) Graphical purlin representation does not depict the size or the orientation of the purlin along the top and/or bottom chord.
13) Attic room checked for L/360 deflection.

Job	Truss	Truss Type	Qty	Ply	Lot 108 South Creek
J0623-3411	A2	Common	8	1	I59478537 Job Reference (optional)

Comtech, Inc, Fayetteville, NC - 28314, 8.430 s Jan 6 2022 MiTek Industries, Inc. Wed Jul 12 07:49:11 2023 Page 1
ID:C5NWnh8QZZzTasfLD?bt5jz_UVZ-RfC?PsB70Hq3NSgPqnL8w3uITXbGKWrCDoi7J4zJC?f

Scale = 1:44.0

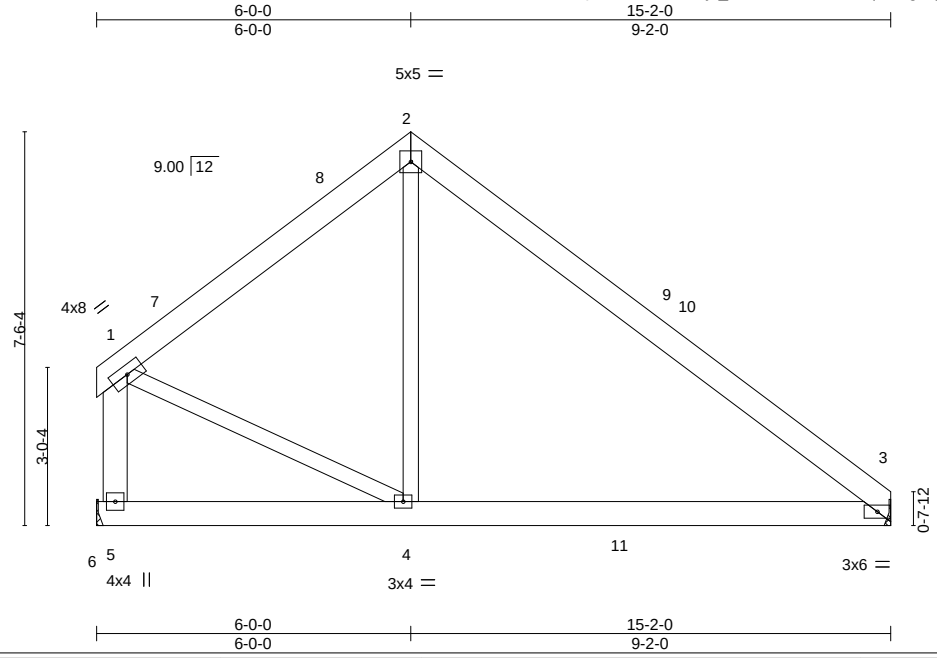

LOADING (psf)			SPACING- 2-0-0		CSI.		DEFL. in (loc) l/defl L/d					PLATES	GRIP
TCLL	20.0		Plate Grip DOL	1.15	TC	0.43	Vert(LL)	-0.06	3-4	>999	360	MT20	244/190
TCDL	10.0		Lumber DOL	1.15	BC	0.29	Vert(CT)	-0.12	3-4	>999	240		
BCLL	0.0	*	Rep Stress Incr	YES	WB	0.11	Horz(CT)	0.00	3	n/a	n/a		
BCDL	10.0		Code IRC2015/TPI2014		Matrix-S		Wind(LL)	0.03	3-4	>999	240	Weight: 105 lb	FT = 20%

LUMBER-
TOP CHORD 2x6 SP No.1
BOT CHORD 2x6 SP No.1
WEBS 2x4 SP No.2 *Except*
1-5: 2x6 SP No.1

BRACING-
TOP CHORD Structural wood sheathing directly applied or 6-0-0 oc purlins, except end verticals.
BOT CHORD Rigid ceiling directly applied or 6-0-0 oc bracing.

REACTIONS. (size) 3=Mechanical, 5=Mechanical
Max Horz 5=-165(LC 8)
Max Uplift 3=-25(LC 13), 5=-30(LC 13)
Max Grav 3=642(LC 20), 5=637(LC 20)

FORCES. (lb) - Max. Comp./Max. Ten. - All forces 250 (lb) or less except when shown.
TOP CHORD 1-2=-593/178, 2-3=-643/135, 1-5=-636/182
BOT CHORD 3-4=0/454
WEBS 2-4=0/282, 1-4=-31/513

NOTES-
1) Unbalanced roof live loads have been considered for this design.
2) Wind: ASCE 7-10; Vult=130mph Vasd=103mph; TCDL=6.0psf; BCDL=6.0psf; h=15ft; Cat. II; Exp C; Enclosed; MWFRS (envelope) and C-C Exterior(2) 0-4-4 to 4-9-1, Interior(1) 4-9-1 to 6-0-0, Exterior(2) 6-0-0 to 10-4-13, Interior(1) 10-4-13 to 15-1-4 zone;C-C for members and forces & MWFRS for reactions shown; Lumber DOL=1.60 plate grip DOL=1.60
3) This truss has been designed for a 10.0 psf bottom chord live load nonconcurrent with any other live loads.
4) * This truss has been designed for a live load of 30.0psf on the bottom chord in all areas where a rectangle 3-6-0 tall by 2-0-0 wide will fit between the bottom chord and any other members, with BCDL = 10.0psf.
5) Refer to girder(s) for truss to truss connections.
6) Provide mechanical connection (by others) of truss to bearing plate capable of withstanding 25 lb uplift at joint 3 and 30 lb uplift at joint 5.

NORTH CAROLINA PROFESSIONAL SEAL 036322 ENGINEER ERIC A. GILBERT

July 12,2023

ENGINEERING BY TRENCO A MiTek Affiliate
818 Soundside Road
Edenton, NC 27932

Job	Truss	Truss Type	Qty	Ply	Lot 108 South Creek
J0623-3411	A3	ATTIC	8	1	I59478538 Job Reference (optional)

Comtech, Inc, Fayetteville, NC - 28314, 8.430 s Jan 6 2022 MiTek Industries, Inc. Wed Jul 12 07:49:13 2023 Page 1

ID:C5NWnh8QZZzTasfLD?bt5jz_UVZ-RfC?PsB70Hq3NSgPqnL8w3uITXbGKWrCDoi7J4zJC?f

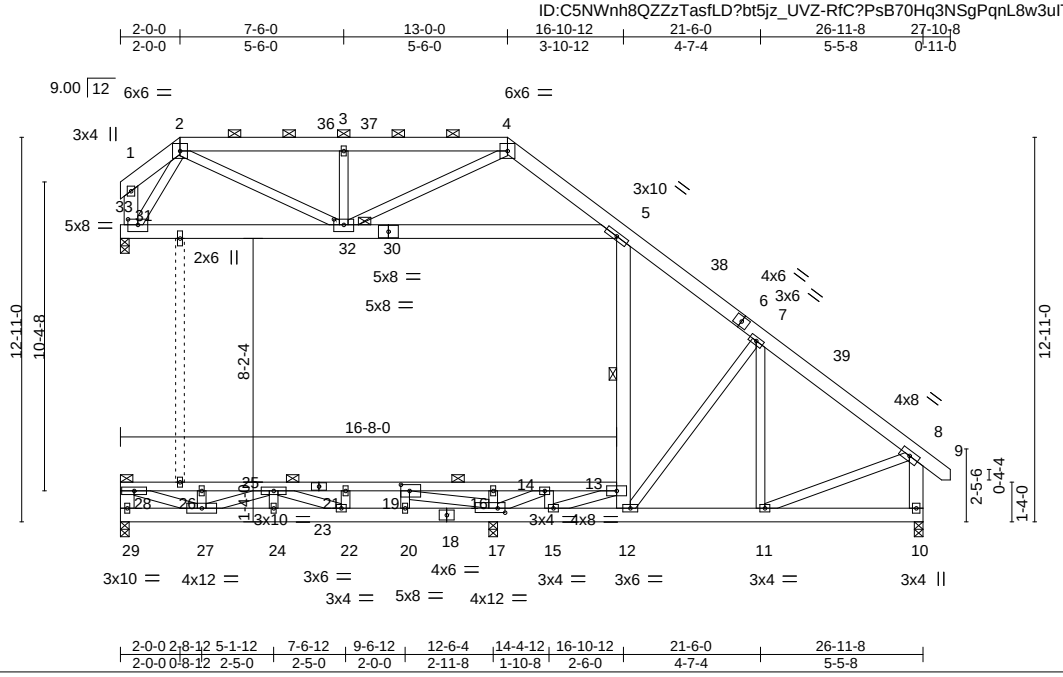

Plate Offsets (X,Y)-- [17:0-3-0,0-1-12], [19:0-3-8,0-2-8], [31:0-4-0,0-2-4], [32:0-4-0,0-2-4]

LOADING (psf)		SPACING- 2-0-0		CSI.		DEFL.	in	(loc)	l/defl	L/d	PLATES	GRIP
TCLL	20.0	Plate Grip DOL	1.15	TC	0.13	Vert(LL)	-0.12	11-12	>999	360	MT20	244/190
TCDL	10.0	Lumber DOL	1.15	BC	0.78	Vert(CT)	-0.21	11-12	>815	240		
BCLL	0.0 *	Rep Stress Incr	NO	WB	0.58	Horz(CT)	-0.20	31	n/a	n/a		
BCDL	10.0	Code IRC2015/TPI2014		Matrix-S		Wind(LL)	0.14	11-12	>999	240	Weight: 322 lb	FT = 20%

LUMBER-

TOP CHORD 2x6 SP No.1

BOT CHORD 2x6 SP No.1 *Except*
23-28,13-23: 2x4 SP No.1

WEBS 2x4 SP No.2 *Except*
5-12,5-30,1-31,8-10,28-29,30-33: 2x6 SP No.1

BRACING-

TOP CHORD Structural wood sheathing directly applied or 6-0-0 oc purlins, except end verticals, and 2-0-0 oc purlins (6-0-0 max.): 2-4.

BOT CHORD Rigid ceiling directly applied or 6-0-0 oc bracing. Except:
5-4-0 oc bracing: 16-28
6-2-0 oc bracing: 13-16

WEBS 1 Row at midpt 5-12

JOINTS 1 Brace at Jt(s): 28, 32

REACTIONS. All bearings 0-3-8.
(lb) - Max Horz 29=-330(LC 13)
Max Uplift All uplift 100 lb or less at joint(s) except 31=-135(LC 9)
Max Grav All reactions 250 lb or less at joint(s) except 29=676(LC 18), 31=501(LC 1), 10=568(LC 1), 17=2285(LC 21)

FORCES. (lb) - Max. Comp./Max. Ten. - All forces 250 (lb) or less except when shown.

TOP CHORD 2-3=-745/454, 3-4=-745/454, 4-5=-721/367, 7-8=-475/0, 8-10=-549/35

BOT CHORD 27-29=-355/393, 24-27=-403/1728, 22-24=-403/1728, 20-22=-1494/1775, 17-20=-1494/1775, 15-17=-1301/687, 12-15=0/461, 11-12=0/315, 26-28=-1214/0, 25-26=-1214/0, 21-25=-1394/1139, 19-21=-1394/1139, 16-19=-1053/2935, 14-16=-1053/2935, 13-14=-307/1065

WEBS 5-13=-540/376, 31-32=-144/272, 5-32=-293/550, 28-29=-600/0, 7-12=-614/325, 7-11=-123/301, 8-11=0/315, 19-20=0/440, 26-27=-305/0, 24-25=0/302, 14-15=-465/856, 16-17=-342/0, 13-15=-1634/671, 27-28=0/1300, 25-27=-553/172, 22-25=-1478/196, 17-19=-2614/0, 14-17=-2100/838, 3-32=-364/194, 2-32=-297/543, 4-32=-129/269, 2-31=-523/275

NOTES-

1) Unbalanced roof live loads have been considered for this design.
2) Wind: ASCE 7-10; Vult=130mph Vasd=103mph; TCDL=6.0psf; BCDL=6.0psf; h=15ft; Cat. II; Exp C; Enclosed; MWFRS (envelope) and C-C Exterior(2) 0-4-4 to 8-2-11, Interior(1) 8-2-11 to 13-0-0, Exterior(2) 13-0-0 to 19-2-11, Interior(1) 19-2-11 to 27-8-12 zone;C-C for members and forces & MWFRS for reactions shown; Lumber DOL=1.60 plate grip DOL=1.60
3) Provide adequate drainage to prevent water ponding.
4) All plates are 2x4 MT20 unless otherwise indicated.
5) This truss has been designed for a 10.0 psf bottom chord live load nonconcurrent with any other live loads.
6) * This truss has been designed for a live load of 30.0psf on the bottom chord in all areas where a rectangle 3-6-0 tall by 2-0-0 wide will fit between the bottom chord and any other members.
7) Provide mechanical connection (by others) of truss to bearing plate capable of withstanding 135 lb uplift at joint 31.
8) Load case(s) 1, 2, 3, 4, 5, 6, 7, 8, 9, 10, 11, 12, 13, 14, 15, 16, 17, 18, 19, 20, 21, 22, 23, 24, 25, 26, 27, 28, 29, 30, 31, 32, 33, 34, 35, 36, 37, 38, 39, 40, 41, 42, 43, 44, 45 has/have been modified. Building designer must review loads to verify that they are correct for the intended use of this truss.
9) Graphical purlin representation does not depict the size or the orientation of the purlin along the top and/or bottom chord.
10) Attic room checked for L/360 deflection.

July 12,2023

Continued on page 2

ENGINEERING BY TRENCO A MiTek Affiliate
818 Soundside Road
Edenton, NC 27932

LOAD CASE(S) Standard

1) Dead + Roof Live (balanced): Lumber Increase=1.15, Plate Increase=1.15
   Uniform Loads (plf)
   Vert: 1-2=-60, 2-4=-60, 4-8=-60, 8-9=-60, 10-29=-20, 13-28=-40
2) Dead + 0.75 Roof Live (balanced): Lumber Increase=1.15, Plate Increase=1.15
   Uniform Loads (plf)
   Vert: 1-2=-50, 2-4=-50, 4-8=-50, 8-9=-50, 10-29=-20, 13-28=-100
3) Dead + Uninhabitable Attic Without Storage: Lumber Increase=1.25, Plate Increase=1.25
   Uniform Loads (plf)
   Vert: 1-2=-20, 2-4=-20, 4-8=-20, 8-9=-20, 10-29=-40, 13-28=-60
4) Dead + 0.6 C-C Wind (Pos. Internal) Case 1: Lumber Increase=1.60, Plate Increase=1.60
   Uniform Loads (plf)
   Vert: 1-2=32, 2-37=36, 4-37=28, 4-38=32, 8-38=25, 8-9=18, 10-29=-12, 13-28=-32
   Horz: 1-2=-44, 4-38=44, 8-38=37, 8-9=30
   Drag: 3-37=0, 4-37=0
5) Dead + 0.6 C-C Wind (Pos. Internal) Case 2: Lumber Increase=1.60, Plate Increase=1.60
   Uniform Loads (plf)
   Vert: 1-2=32, 2-36=28, 4-36=36, 4-39=25, 8-39=32, 8-9=55, 10-29=-12, 13-28=-32
   Horz: 1-2=-44, 4-39=37, 8-39=44, 8-9=67
   Drag: 3-4=0
6) Dead + 0.6 C-C Wind (Neg. Internal) Case 1: Lumber Increase=1.60, Plate Increase=1.60
   Uniform Loads (plf)
   Vert: 1-2=-57, 2-4=-34, 4-8=-57, 8-9=-50, 10-29=-20, 13-28=-40
   Horz: 1-2=37, 4-8=-37, 8-9=-30
   Drag: 3-4=-0
7) Dead + 0.6 C-C Wind (Neg. Internal) Case 2: Lumber Increase=1.60, Plate Increase=1.60
   Uniform Loads (plf)
   Vert: 1-2=-57, 2-4=-34, 4-8=-57, 8-9=10, 10-29=-20, 13-28=-40
   Horz: 1-2=37, 4-8=-37, 8-9=30
   Drag: 3-4=-0
8) Dead + 0.6 MWFRS Wind (Pos. Internal) Left: Lumber Increase=1.60, Plate Increase=1.60
   Uniform Loads (plf)
   Vert: 1-2=-13, 2-4=21, 4-8=11, 8-9=4, 10-29=-12, 13-28=-32
   Horz: 1-2=1, 4-8=23, 8-9=16
   Drag: 3-4=0
9) Dead + 0.6 MWFRS Wind (Pos. Internal) Right: Lumber Increase=1.60, Plate Increase=1.60
   Uniform Loads (plf)
   Vert: 1-2=11, 2-4=21, 4-8=-13, 8-9=2, 10-29=-12, 13-28=-32
   Horz: 1-2=-23, 4-8=-1, 8-9=14
   Drag: 3-4=0
10) Dead + 0.6 MWFRS Wind (Neg. Internal) Left: Lumber Increase=1.60, Plate Increase=1.60
    Uniform Loads (plf)
    Vert: 1-2=-35, 2-4=-1, 4-8=-11, 8-9=-4, 10-29=-20, 13-28=-40
    Horz: 1-2=15, 4-8=9, 8-9=16
    Drag: 3-4=0
11) Dead + 0.6 MWFRS Wind (Neg. Internal) Right: Lumber Increase=1.60, Plate Increase=1.60
    Uniform Loads (plf)
    Vert: 1-2=-11, 2-4=-1, 4-8=-35, 8-9=-28, 10-29=-20, 13-28=-40
    Horz: 1-2=-9, 4-8=-15, 8-9=-8
    Drag: 3-4=0
12) Dead + 0.6 MWFRS Wind (Pos. Internal) 1st Parallel: Lumber Increase=1.60, Plate Increase=1.60
    Uniform Loads (plf)
    Vert: 1-2=21, 2-4=9, 4-8=9, 8-9=2, 10-29=-12, 13-28=-32
    Horz: 1-2=-33, 4-8=21, 8-9=14
    Drag: 3-4=0
13) Dead + 0.6 MWFRS Wind (Pos. Internal) 2nd Parallel: Lumber Increase=1.60, Plate Increase=1.60
    Uniform Loads (plf)
    Vert: 1-2=9, 2-4=9, 4-8=21, 8-9=14, 10-29=-12, 13-28=-32
    Horz: 1-2=-21, 4-8=33, 8-9=26
    Drag: 3-4=0
14) Dead + 0.6 MWFRS Wind (Pos. Internal) 3rd Parallel: Lumber Increase=1.60, Plate Increase=1.60
    Uniform Loads (plf)
    Vert: 1-2=21, 2-4=9, 4-8=9, 8-9=2, 10-29=-12, 13-28=-32
    Horz: 1-2=-33, 4-8=21, 8-9=14
    Drag: 3-4=0
15) Dead + 0.6 MWFRS Wind (Pos. Internal) 4th Parallel: Lumber Increase=1.60, Plate Increase=1.60
    Uniform Loads (plf)
    Vert: 1-2=9, 2-4=9, 4-8=21, 8-9=14, 10-29=-12, 13-28=-32
    Horz: 1-2=-21, 4-8=33, 8-9=26
    Drag: 3-4=0
16) Dead + 0.6 MWFRS Wind (Neg. Internal) 1st Parallel: Lumber Increase=1.60, Plate Increase=1.60
    Uniform Loads (plf)
    Vert: 1-2=-1, 2-4=-13, 4-8=-13, 8-9=-6, 10-29=-20, 13-28=-40
    Horz: 1-2=-19, 4-8=7, 8-9=14
    Drag: 3-4=0
17) Dead + 0.6 MWFRS Wind (Neg. Internal) 2nd Parallel: Lumber Increase=1.60, Plate Increase=1.60

Continued on page 3

LOAD CASE(S) Standard
Uniform Loads (plf)
Vert: 1-2=-13, 2-4=-13, 4-8=-1, 8-9=6, 10-29=-20, 13-28=-40
Horz: 1-2=-7, 4-8=19, 8-9=26
Drag: 3-4=0

18) Dead: Lumber Increase=0.90, Plate Increase=0.90 Plt. metal=0.90
Uniform Loads (plf)
Vert: 1-2=-20, 2-4=-20, 4-8=-20, 8-9=-20, 10-29=-20, 13-28=-120

19) Dead: Lumber Increase=0.90, Plate Increase=0.90 Plt. metal=0.90
Uniform Loads (plf)
Vert: 1-2=-20, 2-4=-20, 4-8=-20, 8-9=-20, 10-29=-20, 13-28=-120

20) Dead + 0.75 Roof Live (bal.) + 0.75 Attic Floor + 0.75(0.6 MWFRS Wind (Neg. Int) Left): Lumber Increase=1.60, Plate Increase=1.60
Uniform Loads (plf)
Vert: 1-2=-61, 2-4=-36, 4-8=-43, 8-9=-38, 10-29=-20, 13-28=-100
Horz: 1-2=11, 4-8=7, 8-9=12
Drag: 3-4=0

21) Dead + 0.75 Roof Live (bal.) + 0.75 Attic Floor + 0.75(0.6 MWFRS Wind (Neg. Int) Right): Lumber Increase=1.60, Plate Increase=1.60
Uniform Loads (plf)
Vert: 1-2=-43, 2-4=-36, 4-8=-61, 8-9=-56, 10-29=-20, 13-28=-100
Horz: 1-2=-7, 4-8=-11, 8-9=-6
Drag: 3-4=0

22) Dead + 0.75 Roof Live (bal.) + 0.75 Attic Floor + 0.75(0.6 MWFRS Wind (Neg. Int) 1st Parallel): Lumber Increase=1.60, Plate Increase=1.60
Uniform Loads (plf)
Vert: 1-2=-36, 2-4=-45, 4-8=-45, 8-9=-40, 10-29=-20, 13-28=-100
Horz: 1-2=-14, 4-8=5, 8-9=10
Drag: 3-4=0

23) Dead + 0.75 Roof Live (bal.) + 0.75 Attic Floor + 0.75(0.6 MWFRS Wind (Neg. Int) 2nd Parallel): Lumber Increase=1.60, Plate Increase=1.60
Uniform Loads (plf)
Vert: 1-2=-45, 2-4=-45, 4-8=-36, 8-9=-31, 10-29=-20, 13-28=-100
Horz: 1-2=-5, 4-8=14, 8-9=19
Drag: 3-4=0

24) 1st Dead + Roof Live (unbalanced): Lumber Increase=1.15, Plate Increase=1.15
Uniform Loads (plf)
Vert: 1-2=-60, 2-4=-60, 4-8=-20, 8-9=-20, 10-29=-20, 13-28=-40

25) 2nd Dead + Roof Live (unbalanced): Lumber Increase=1.15, Plate Increase=1.15
Uniform Loads (plf)
Vert: 1-2=-20, 2-4=-60, 4-8=-60, 8-9=-60, 10-29=-20, 13-28=-40

26) 3rd Dead + 0.75 Roof Live (unbalanced): Lumber Increase=1.15, Plate Increase=1.15
Uniform Loads (plf)
Vert: 1-2=-50, 2-4=-50, 4-8=-20, 8-9=-20, 10-29=-20, 13-28=-100

27) 4th Dead + 0.75 Roof Live (unbalanced): Lumber Increase=1.15, Plate Increase=1.15
Uniform Loads (plf)
Vert: 1-2=-20, 2-4=-50, 4-8=-50, 8-9=-50, 10-29=-20, 13-28=-100

28) Reversal: Dead + 0.6 C-C Wind (Pos. Internal) Case 1: Lumber Increase=1.60, Plate Increase=1.60
Uniform Loads (plf)
Vert: 1-2=32, 2-37=36, 4-37=28, 4-38=32, 8-38=25, 8-9=18, 10-29=-12, 13-28=-32
Horz: 1-2=-44, 4-38=44, 8-38=37, 8-9=30
Drag: 3-37=0, 4-37=0

29) Reversal: Dead + 0.6 C-C Wind (Pos. Internal) Case 2: Lumber Increase=1.60, Plate Increase=1.60
Uniform Loads (plf)
Vert: 1-2=32, 2-36=28, 4-36=36, 4-39=25, 8-39=32, 8-9=55, 10-29=-12, 13-28=-32
Horz: 1-2=-44, 4-39=37, 8-39=44, 8-9=67
Drag: 3-4=0

30) Reversal: Dead + 0.6 C-C Wind (Neg. Internal) Case 1: Lumber Increase=1.60, Plate Increase=1.60
Uniform Loads (plf)
Vert: 1-2=-57, 2-4=-34, 4-8=-57, 8-9=-50, 10-29=-20, 13-28=-40
Horz: 1-2=37, 4-8=-37, 8-9=-30
Drag: 3-4=-0

31) Reversal: Dead + 0.6 C-C Wind (Neg. Internal) Case 2: Lumber Increase=1.60, Plate Increase=1.60
Uniform Loads (plf)
Vert: 1-2=-57, 2-4=-34, 4-8=-57, 8-9=10, 10-29=-20, 13-28=-40
Horz: 1-2=37, 4-8=-37, 8-9=30
Drag: 3-4=-0

32) Reversal: Dead + 0.6 MWFRS Wind (Pos. Internal) Left: Lumber Increase=1.60, Plate Increase=1.60
Uniform Loads (plf)
Vert: 1-2=-13, 2-4=21, 4-8=11, 8-9=4, 10-29=-12, 13-28=-32
Horz: 1-2=1, 4-8=23, 8-9=16
Drag: 3-4=0

33) Reversal: Dead + 0.6 MWFRS Wind (Pos. Internal) Right: Lumber Increase=1.60, Plate Increase=1.60
Uniform Loads (plf)
Vert: 1-2=11, 2-4=21, 4-8=-13, 8-9=2, 10-29=-12, 13-28=-32
Horz: 1-2=-23, 4-8=-1, 8-9=14
Drag: 3-4=0

34) Reversal: Dead + 0.6 MWFRS Wind (Neg. Internal) Left: Lumber Increase=1.60, Plate Increase=1.60

Continued on page 4

LOAD CASE(S) Standard
Uniform Loads (plf)
Vert: 1-2=-35, 2-4=-1, 4-8=-11, 8-9=-4, 10-29=-20, 13-28=-40
Horz: 1-2=15, 4-8=9, 8-9=16
Drag: 3-4=0

35) Reversal: Dead + 0.6 MWFRS Wind (Neg. Internal) Right: Lumber Increase=1.60, Plate Increase=1.60
Uniform Loads (plf)
Vert: 1-2=-11, 2-4=-1, 4-8=-35, 8-9=-28, 10-29=-20, 13-28=-40
Horz: 1-2=-9, 4-8=-15, 8-9=-8
Drag: 3-4=0

36) Reversal: Dead + 0.6 MWFRS Wind (Pos. Internal) 1st Parallel: Lumber Increase=1.60, Plate Increase=1.60
Uniform Loads (plf)
Vert: 1-2=21, 2-4=9, 4-8=9, 8-9=2, 10-29=-12, 13-28=-32
Horz: 1-2=-33, 4-8=21, 8-9=14
Drag: 3-4=0

37) Reversal: Dead + 0.6 MWFRS Wind (Pos. Internal) 2nd Parallel: Lumber Increase=1.60, Plate Increase=1.60
Uniform Loads (plf)
Vert: 1-2=9, 2-4=9, 4-8=21, 8-9=14, 10-29=-12, 13-28=-32
Horz: 1-2=-21, 4-8=33, 8-9=26
Drag: 3-4=0

38) Reversal: Dead + 0.6 MWFRS Wind (Pos. Internal) 3rd Parallel: Lumber Increase=1.60, Plate Increase=1.60
Uniform Loads (plf)
Vert: 1-2=21, 2-4=9, 4-8=9, 8-9=2, 10-29=-12, 13-28=-32
Horz: 1-2=-33, 4-8=21, 8-9=14
Drag: 3-4=0

39) Reversal: Dead + 0.6 MWFRS Wind (Pos. Internal) 4th Parallel: Lumber Increase=1.60, Plate Increase=1.60
Uniform Loads (plf)
Vert: 1-2=9, 2-4=9, 4-8=21, 8-9=14, 10-29=-12, 13-28=-32
Horz: 1-2=-21, 4-8=33, 8-9=26
Drag: 3-4=0

40) Reversal: Dead + 0.6 MWFRS Wind (Neg. Internal) 1st Parallel: Lumber Increase=1.60, Plate Increase=1.60
Uniform Loads (plf)
Vert: 1-2=-1, 2-4=-13, 4-8=-13, 8-9=-6, 10-29=-20, 13-28=-40
Horz: 1-2=-19, 4-8=7, 8-9=14
Drag: 3-4=0

41) Reversal: Dead + 0.6 MWFRS Wind (Neg. Internal) 2nd Parallel: Lumber Increase=1.60, Plate Increase=1.60
Uniform Loads (plf)
Vert: 1-2=-13, 2-4=-13, 4-8=-1, 8-9=6, 10-29=-20, 13-28=-40
Horz: 1-2=-7, 4-8=19, 8-9=26
Drag: 3-4=0

42) Reversal: Dead + 0.75 Roof Live (bal.) + 0.75 Attic Floor + 0.75(0.6 MWFRS Wind (Neg. Int) Left): Lumber Increase=1.60, Plate Increase=1.60
Uniform Loads (plf)
Vert: 1-2=-61, 2-4=-36, 4-8=-43, 8-9=-38, 10-29=-20, 13-28=-100
Horz: 1-2=11, 4-8=7, 8-9=12
Drag: 3-4=0

43) Reversal: Dead + 0.75 Roof Live (bal.) + 0.75 Attic Floor + 0.75(0.6 MWFRS Wind (Neg. Int) Right): Lumber Increase=1.60, Plate Increase=1.60
Uniform Loads (plf)
Vert: 1-2=-43, 2-4=-36, 4-8=-61, 8-9=-56, 10-29=-20, 13-28=-100
Horz: 1-2=-7, 4-8=-11, 8-9=-6
Drag: 3-4=0

44) Reversal: Dead + 0.75 Roof Live (bal.) + 0.75 Attic Floor + 0.75(0.6 MWFRS Wind (Neg. Int) 1st Parallel): Lumber Increase=1.60, Plate Increase=1.60
Uniform Loads (plf)
Vert: 1-2=-36, 2-4=-45, 4-8=-45, 8-9=-40, 10-29=-20, 13-28=-100
Horz: 1-2=-14, 4-8=5, 8-9=10
Drag: 3-4=0

45) Reversal: Dead + 0.75 Roof Live (bal.) + 0.75 Attic Floor + 0.75(0.6 MWFRS Wind (Neg. Int) 2nd Parallel): Lumber Increase=1.60, Plate Increase=1.60
Uniform Loads (plf)
Vert: 1-2=-45, 2-4=-45, 4-8=-36, 8-9=-31, 10-29=-20, 13-28=-100
Horz: 1-2=-5, 4-8=14, 8-9=19
Drag: 3-4=0

Job	Truss	Truss Type	Qty	Ply	Lot 108 South Creek
J0623-3411	A3-GR	ATTIC	1	2	I59478539 Job Reference (optional)

Comtech, Inc, Fayetteville, NC - 28314, 8.430 s Jan 6 2022 MiTek Industries, Inc. Wed Jul 12 07:49:18 2023 Page 1
ID:C5NWnh8QZZzTasfLD?bt5jz_UVZ-RfC?PsB70Hq3NSgPqnL8w3uITXbGKWrCDoi7J4zJC?f

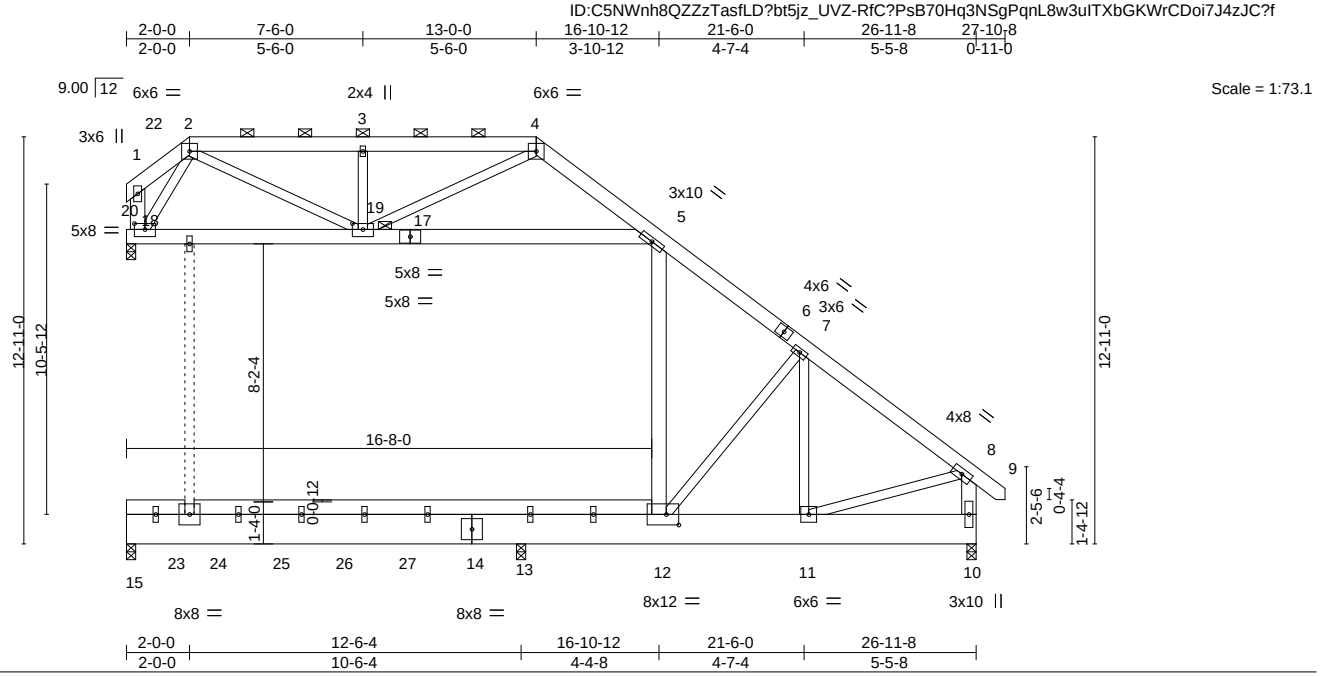

Plate Offsets (X,Y)-- [12:0-4-12,0-4-0], [18:0-4-0,0-2-4], [19:0-4-0,0-2-4]

LOADING (psf)		SPACING- 2-0-0		CSI.		DEFL.	in	(loc)	l/defl	L/d	PLATES	GRIP
TCLL	20.0	Plate Grip DOL	1.15	TC	0.44	Vert(LL)	-0.13	13-15	>999	360	MT20	244/190
TCDL	10.0	Lumber DOL	1.15	BC	0.46	Vert(CT)	-0.18	13-15	>819	240		
BCLL	0.0 *	Rep Stress Incr	NO	WB	0.54	Horz(CT)	-0.04	18	n/a	n/a		
BCDL	10.0	Code IRC2015/TPI2014		Matrix-S		Wind(LL)	0.03	11-12	>999	240	Weight: 743 lb	FT = 20%

LUMBER-
TOP CHORD 2x6 SP No.1
BOT CHORD 2x6 SP No.1 *Except*
14-15,10-14: 2x12 SP 2400F 2.0E
WEBS 2x4 SP No.2 *Except*
5-12,5-17,1-18,8-10,17-20: 2x6 SP No.1

BRACING-
TOP CHORD Structural wood sheathing directly applied or 6-0-0 oc purlins, except end verticals, and 2-0-0 oc purlins (6-0-0 max.): 2-4.
BOT CHORD Rigid ceiling directly applied or 10-0-0 oc bracing.
JOINTS 1 Brace at Jt(s): 19

REACTIONS. All bearings 0-3-8.
(lb) - Max Horz 15=-330(LC 9)
Max Uplift All uplift 100 lb or less at joint(s) 15, 13 except 18=-266(LC 4)
Max Grav All reactions 250 lb or less at joint(s) except 15=1424(LC 14), 18=3965(LC 2), 10=755(LC 35), 13=4431(LC 14)

FORCES. (lb) - Max. Comp./Max. Ten. - All forces 250 (lb) or less except when shown.
TOP CHORD 1-2=-1107/872, 2-3=-2312/28, 3-4=-2313/27, 4-5=-1493/78, 7-8=-752/0, 1-18=-1516/177, 8-10=-770/0
BOT CHORD 13-15=-168/330, 12-13=-168/330, 11-12=0/576
WEBS 5-12=-1382/95, 18-19=-122/1478, 5-19=-88/1139, 7-12=-1030/275, 7-11=-132/908, 8-11=0/564, 3-19=-325/155, 2-19=-189/1374, 4-19=0/1357, 2-18=-2568/207

NOTES-
1) 2-ply truss to be connected together with 10d (0.131"x3") nails as follows:
Top chords connected as follows: 2x6 - 2 rows staggered at 0-2-0 oc.
Bottom chords connected as follows: 2x12 - 2 rows staggered at 0-5-0 oc.
Webs connected as follows: 2x6 - 2 rows staggered at 0-9-0 oc, 2x4 - 1 row at 0-9-0 oc.
2) All loads are considered equally applied to all plies, except if noted as front (F) or back (B) face in the LOAD CASE(S) section. Ply to ply connections have been provided to distribute only loads noted as (F) or (B), unless otherwise indicated.
3) Unbalanced roof live loads have been considered for this design.
4) Wind: ASCE 7-10; Vult=130mph Vasd=103mph; TCDL=6.0psf; BCDL=6.0psf; h=15ft; Cat. II; Exp C; Enclosed; MWFRS (envelope); Lumber DOL=1.60 plate grip DOL=1.60
5) Provide adequate drainage to prevent water ponding.
6) All plates are 2x6 MT20 unless otherwise indicated.
7) This truss has been designed for a 10.0 psf bottom chord live load nonconcurrent with any other live loads.
8) * This truss has been designed for a live load of 30.0psf on the bottom chord in all areas where a rectangle 3-6-0 tall by 2-0-0 wide will fit between the bottom chord and any other members.
9) Provide mechanical connection (by others) of truss to bearing plate capable of withstanding 100 lb uplift at joint(s) 15, 13 except (jt=lb) 18=266.
10) Load case(s) 1, 2, 3, 4, 5, 6, 7, 8, 9, 10, 11, 12, 13, 14, 15, 16, 17, 18, 19, 20, 21, 22, 23, 24, 25, 26, 27, 28, 29, 30, 31, 32, 33, 34, 35, 36, 37 has/have been modified. Building designer must review loads to verify that they are correct for the intended use of this truss.
11) Graphical purlin representation does not depict the size or the orientation of the purlin along the top and/or bottom chord.

July 12,2023

Continued on page 2

ENGINEERING BY TRENCO A MiTek Affiliate
818 Soundside Road
Edenton, NC 27932

NOTES-

12) Hanger(s) or other connection device(s) shall be provided sufficient to support concentrated load(s) 3137 lb down and 363 lb up at 1-4-8 on top chord, and 297 lb down at 1-5-12, 297 lb down at 2-9-12, 297 lb down at 4-9-12, 1499 lb down at 6-9-12, and 910 lb down at 8-9-12, and 910 lb down at 10-9-12 on bottom chord. The design/selection of such connection device(s) is the responsibility of others.
13) Attic room checked for L/360 deflection.

LOAD CASE(S) Standard

1) Dead + Roof Live (balanced): Lumber Increase=1.15, Plate Increase=1.15
   Uniform Loads (plf)
      Vert: 1-2=-60, 2-4=-60, 4-8=-60, 8-9=-60, 10-15=-20, 5-20=-20
   Concentrated Loads (lb)
      Vert: 14=-234(B) 22=-3104(B) 23=-67(B) 24=-67(B) 25=-67(B) 26=-412(B) 27=-234(B)
2) Dead + 0.75 Roof Live (balanced) + 0.75 Uninhab. Attic Storage + 0.75 Attic Floor: Lumber Increase=1.15, Plate Increase=1.15
   Uniform Loads (plf)
      Vert: 1-2=-50, 2-4=-50, 4-8=-50, 8-9=-50, 10-15=-20, 5-20=-80
   Concentrated Loads (lb)
      Vert: 14=-741(B) 22=-3055(B) 23=-240(B) 24=-240(B) 25=-240(B) 26=-1228(B) 27=-741(B)
3) Dead + Uninhabitable Attic Without Storage: Lumber Increase=1.25, Plate Increase=1.25
   Uniform Loads (plf)
      Vert: 1-2=-20, 2-4=-20, 4-8=-20, 8-9=-20, 10-15=-40, 5-20=-20
   Concentrated Loads (lb)
      Vert: 22=-2244(B)
4) Dead + 0.6 MWFRS Wind (Pos. Internal) Left: Lumber Increase=1.60, Plate Increase=1.60
   Uniform Loads (plf)
      Vert: 1-2=-13, 2-4=21, 4-8=11, 8-9=4, 10-15=-12, 5-20=-20
      Horz: 1-2=1, 4-8=23, 8-9=16
      Drag: 3-4=0
   Concentrated Loads (lb)
      Vert: 22=341(B)
5) Dead + 0.6 MWFRS Wind (Pos. Internal) Right: Lumber Increase=1.60, Plate Increase=1.60
   Uniform Loads (plf)
      Vert: 1-2=11, 2-4=21, 4-8=-13, 8-9=2, 10-15=-12, 5-20=-20
      Horz: 1-2=-23, 4-8=-1, 8-9=14
      Drag: 3-4=0
   Concentrated Loads (lb)
      Vert: 22=322(B)
6) Dead + 0.6 MWFRS Wind (Neg. Internal) Left: Lumber Increase=1.60, Plate Increase=1.60
   Uniform Loads (plf)
      Vert: 1-2=-35, 2-4=-1, 4-8=-11, 8-9=-4, 10-15=-20, 5-20=-20
      Horz: 1-2=15, 4-8=9, 8-9=16
      Drag: 3-4=0
   Concentrated Loads (lb)
      Vert: 22=363(B)
7) Dead + 0.6 MWFRS Wind (Neg. Internal) Right: Lumber Increase=1.60, Plate Increase=1.60
   Uniform Loads (plf)
      Vert: 1-2=-11, 2-4=-1, 4-8=-35, 8-9=-28, 10-15=-20, 5-20=-20
      Horz: 1-2=-9, 4-8=-15, 8-9=-8
      Drag: 3-4=0
   Concentrated Loads (lb)
      Vert: 22=343(B)
8) Dead + 0.6 MWFRS Wind (Pos. Internal) 1st Parallel: Lumber Increase=1.60, Plate Increase=1.60
   Uniform Loads (plf)
      Vert: 1-2=21, 2-4=9, 4-8=9, 8-9=2, 10-15=-12, 5-20=-20
      Horz: 1-2=-33, 4-8=21, 8-9=14
      Drag: 3-4=0
   Concentrated Loads (lb)
      Vert: 22=316(B)
9) Dead + 0.6 MWFRS Wind (Pos. Internal) 2nd Parallel: Lumber Increase=1.60, Plate Increase=1.60
   Uniform Loads (plf)
      Vert: 1-2=9, 2-4=9, 4-8=21, 8-9=14, 10-15=-12, 5-20=-20
      Horz: 1-2=-21, 4-8=33, 8-9=26
      Drag: 3-4=0
   Concentrated Loads (lb)
      Vert: 22=326(B)
10) Dead + 0.6 MWFRS Wind (Pos. Internal) 3rd Parallel: Lumber Increase=1.60, Plate Increase=1.60
   Uniform Loads (plf)
      Vert: 1-2=21, 2-4=9, 4-8=9, 8-9=2, 10-15=-12, 5-20=-20
      Horz: 1-2=-33, 4-8=21, 8-9=14
      Drag: 3-4=0
   Concentrated Loads (lb)
      Vert: 22=316(B)
11) Dead + 0.6 MWFRS Wind (Pos. Internal) 4th Parallel: Lumber Increase=1.60, Plate Increase=1.60
   Uniform Loads (plf)
      Vert: 1-2=9, 2-4=9, 4-8=21, 8-9=14, 10-15=-12, 5-20=-20
      Horz: 1-2=-21, 4-8=33, 8-9=26
      Drag: 3-4=0
   Concentrated Loads (lb)
      Vert: 22=326(B)

Continued on page 3

LOAD CASE(S) Standard

12) Dead + 0.6 MWFRS Wind (Neg. Internal) 1st Parallel: Lumber Increase=1.60, Plate Increase=1.60
Uniform Loads (plf)
Vert: 1-2=-1, 2-4=-13, 4-8=-13, 8-9=-6, 10-15=-20, 5-20=-20
Horz: 1-2=-19, 4-8=7, 8-9=14
Drag: 3-4=0
Concentrated Loads (lb)
Vert: 22=337(B)

13) Dead + 0.6 MWFRS Wind (Neg. Internal) 2nd Parallel: Lumber Increase=1.60, Plate Increase=1.60
Uniform Loads (plf)
Vert: 1-2=-13, 2-4=-13, 4-8=-1, 8-9=6, 10-15=-20, 5-20=-20
Horz: 1-2=-7, 4-8=19, 8-9=26
Drag: 3-4=0
Concentrated Loads (lb)
Vert: 22=347(B)

14) Dead + Uninhab. Attic Storage + Attic Floor: Lumber Increase=0.90, Plate Increase=0.90 Plt. metal=0.90
Uniform Loads (plf)
Vert: 1-2=-20, 2-4=-20, 4-8=-20, 8-9=-20, 10-15=-20, 5-20=-100
Concentrated Loads (lb)
Vert: 14=-910(B) 22=-1981(B) 23=-297(B) 24=-297(B) 25=-297(B) 26=-1499(B) 27=-910(B)

15) Dead + Uninhabitable Attic Storage: Lumber Increase=0.90, Plate Increase=0.90 Plt. metal=0.90
Uniform Loads (plf)
Vert: 1-2=-20, 2-4=-20, 4-8=-20, 8-9=-20, 10-15=-20, 5-20=-100
Concentrated Loads (lb)
Vert: 14=-910(B) 22=-1981(B) 23=-297(B) 24=-297(B) 25=-297(B) 26=-1499(B) 27=-910(B)

16) Dead + 0.75 Roof Live (bal.) + 0.75 Attic Floor + 0.75(0.6 MWFRS Wind (Neg. Int) Left): Lumber Increase=1.60, Plate Increase=1.60
Uniform Loads (plf)
Vert: 1-2=-61, 2-4=-36, 4-8=-43, 8-9=-38, 10-15=-20, 5-20=-80
Horz: 1-2=11, 4-8=7, 8-9=12
Drag: 3-4=0
Concentrated Loads (lb)
Vert: 22=46(B)

17) Dead + 0.75 Roof Live (bal.) + 0.75 Attic Floor + 0.75(0.6 MWFRS Wind (Neg. Int) Right): Lumber Increase=1.60, Plate Increase=1.60
Uniform Loads (plf)
Vert: 1-2=-43, 2-4=-36, 4-8=-61, 8-9=-56, 10-15=-20, 5-20=-80
Horz: 1-2=-7, 4-8=-11, 8-9=-6
Drag: 3-4=0
Concentrated Loads (lb)
Vert: 22=32(B)

18) Dead + 0.75 Roof Live (bal.) + 0.75 Attic Floor + 0.75(0.6 MWFRS Wind (Neg. Int) 1st Parallel): Lumber Increase=1.60, Plate Increase=1.60
Uniform Loads (plf)
Vert: 1-2=-36, 2-4=-45, 4-8=-45, 8-9=-40, 10-15=-20, 5-20=-80
Horz: 1-2=-14, 4-8=5, 8-9=10
Drag: 3-4=0
Concentrated Loads (lb)
Vert: 22=27(B)

19) Dead + 0.75 Roof Live (bal.) + 0.75 Attic Floor + 0.75(0.6 MWFRS Wind (Neg. Int) 2nd Parallel): Lumber Increase=1.60, Plate Increase=1.60
Uniform Loads (plf)
Vert: 1-2=-45, 2-4=-45, 4-8=-36, 8-9=-31, 10-15=-20, 5-20=-80
Horz: 1-2=-5, 4-8=14, 8-9=19
Drag: 3-4=0
Concentrated Loads (lb)
Vert: 22=35(B)

20) 1st Dead + Roof Live (unbalanced): Lumber Increase=1.15, Plate Increase=1.15
Uniform Loads (plf)
Vert: 1-2=-60, 2-4=-60, 4-8=-20, 8-9=-20, 10-15=-20, 5-20=-20
Concentrated Loads (lb)
Vert: 14=-234(B) 22=-3104(B) 23=-67(B) 24=-67(B) 25=-67(B) 26=-412(B) 27=-234(B)

21) 2nd Dead + Roof Live (unbalanced): Lumber Increase=1.15, Plate Increase=1.15
Uniform Loads (plf)
Vert: 1-2=-20, 2-4=-60, 4-8=-60, 8-9=-60, 10-15=-20, 5-20=-20
Concentrated Loads (lb)
Vert: 14=-234(B) 22=-3137(B) 23=-67(B) 24=-67(B) 25=-67(B) 26=-412(B) 27=-234(B)

22) 3rd Dead + 0.75 Roof Live (unbalanced) + 0.75 Uninhab. Attic Storage + 0.75 Attic Floor: Lumber Increase=1.15, Plate Increase=1.15
Uniform Loads (plf)
Vert: 1-2=-50, 2-4=-50, 4-8=-20, 8-9=-20, 10-15=-20, 5-20=-80
Concentrated Loads (lb)
Vert: 14=-741(B) 22=-3055(B) 23=-240(B) 24=-240(B) 25=-240(B) 26=-1228(B) 27=-741(B)

23) 4th Dead + 0.75 Roof Live (unbalanced) + 0.75 Uninhab. Attic Storage + 0.75 Attic Floor: Lumber Increase=1.15, Plate Increase=1.15
Uniform Loads (plf)
Vert: 1-2=-20, 2-4=-50, 4-8=-50, 8-9=-50, 10-15=-20, 5-20=-80
Concentrated Loads (lb)
Vert: 14=-741(B) 22=-3079(B) 23=-240(B) 24=-240(B) 25=-240(B) 26=-1228(B) 27=-741(B)

24) Reversal: Dead + 0.6 MWFRS Wind (Pos. Internal) Left: Lumber Increase=1.60, Plate Increase=1.60

Continued on page 4

LOAD CASE(S) Standard
Uniform Loads (plf)
Vert: 1-2=-13, 2-4=21, 4-8=11, 8-9=4, 10-15=-12, 5-20=-20
Horz: 1-2=1, 4-8=23, 8-9=16
Drag: 3-4=0
Concentrated Loads (lb)
Vert: 22=-1643(B)

25) Reversal: Dead + 0.6 MWFRS Wind (Pos. Internal) Right: Lumber Increase=1.60, Plate Increase=1.60
Uniform Loads (plf)
Vert: 1-2=11, 2-4=21, 4-8=-13, 8-9=2, 10-15=-12, 5-20=-20
Horz: 1-2=-23, 4-8=-1, 8-9=14
Drag: 3-4=0
Concentrated Loads (lb)
Vert: 22=-1662(B)

26) Reversal: Dead + 0.6 MWFRS Wind (Neg. Internal) Left: Lumber Increase=1.60, Plate Increase=1.60
Uniform Loads (plf)
Vert: 1-2=-35, 2-4=-1, 4-8=-11, 8-9=-4, 10-15=-20, 5-20=-20
Horz: 1-2=15, 4-8=9, 8-9=16
Drag: 3-4=0
Concentrated Loads (lb)
Vert: 22=-1621(B)

27) Reversal: Dead + 0.6 MWFRS Wind (Neg. Internal) Right: Lumber Increase=1.60, Plate Increase=1.60
Uniform Loads (plf)
Vert: 1-2=-11, 2-4=-1, 4-8=-35, 8-9=-28, 10-15=-20, 5-20=-20
Horz: 1-2=-9, 4-8=-15, 8-9=-8
Drag: 3-4=0
Concentrated Loads (lb)
Vert: 22=-1641(B)

28) Reversal: Dead + 0.6 MWFRS Wind (Pos. Internal) 1st Parallel: Lumber Increase=1.60, Plate Increase=1.60
Uniform Loads (plf)
Vert: 1-2=21, 2-4=9, 4-8=9, 8-9=2, 10-15=-12, 5-20=-20
Horz: 1-2=-33, 4-8=21, 8-9=14
Drag: 3-4=0
Concentrated Loads (lb)
Vert: 22=-1668(B)

29) Reversal: Dead + 0.6 MWFRS Wind (Pos. Internal) 2nd Parallel: Lumber Increase=1.60, Plate Increase=1.60
Uniform Loads (plf)
Vert: 1-2=9, 2-4=9, 4-8=21, 8-9=14, 10-15=-12, 5-20=-20
Horz: 1-2=-21, 4-8=33, 8-9=26
Drag: 3-4=0
Concentrated Loads (lb)
Vert: 22=-1658(B)

30) Reversal: Dead + 0.6 MWFRS Wind (Pos. Internal) 3rd Parallel: Lumber Increase=1.60, Plate Increase=1.60
Uniform Loads (plf)
Vert: 1-2=21, 2-4=9, 4-8=9, 8-9=2, 10-15=-12, 5-20=-20
Horz: 1-2=-33, 4-8=21, 8-9=14
Drag: 3-4=0
Concentrated Loads (lb)
Vert: 22=-1668(B)

31) Reversal: Dead + 0.6 MWFRS Wind (Pos. Internal) 4th Parallel: Lumber Increase=1.60, Plate Increase=1.60
Uniform Loads (plf)
Vert: 1-2=9, 2-4=9, 4-8=21, 8-9=14, 10-15=-12, 5-20=-20
Horz: 1-2=-21, 4-8=33, 8-9=26
Drag: 3-4=0
Concentrated Loads (lb)
Vert: 22=-1658(B)

32) Reversal: Dead + 0.6 MWFRS Wind (Neg. Internal) 1st Parallel: Lumber Increase=1.60, Plate Increase=1.60
Uniform Loads (plf)
Vert: 1-2=-1, 2-4=-13, 4-8=-13, 8-9=-6, 10-15=-20, 5-20=-20
Horz: 1-2=-19, 4-8=7, 8-9=14
Drag: 3-4=0
Concentrated Loads (lb)
Vert: 22=-1646(B)

33) Reversal: Dead + 0.6 MWFRS Wind (Neg. Internal) 2nd Parallel: Lumber Increase=1.60, Plate Increase=1.60
Uniform Loads (plf)
Vert: 1-2=-13, 2-4=-13, 4-8=-1, 8-9=6, 10-15=-20, 5-20=-20
Horz: 1-2=-7, 4-8=19, 8-9=26
Drag: 3-4=0
Concentrated Loads (lb)
Vert: 22=-1637(B)

34) Reversal: Dead + 0.75 Roof Live (bal.) + 0.75 Attic Floor + 0.75(0.6 MWFRS Wind (Neg. Int) Left): Lumber Increase=1.60, Plate Increase=1.60

Continued on page 5

LOAD CASE(S) Standard

Uniform Loads (plf)
Vert: 1-2=-61, 2-4=-36, 4-8=-43, 8-9=-38, 10-15=-20, 5-20=-80
Horz: 1-2=11, 4-8=7, 8-9=12
Drag: 3-4=0
Concentrated Loads (lb)
Vert: 22=-2495(B)

35) Reversal: Dead + 0.75 Roof Live (bal.) + 0.75 Attic Floor + 0.75(0.6 MWFRS Wind (Neg. Int) Right): Lumber Increase=1.60, Plate Increase=1.60
Uniform Loads (plf)
Vert: 1-2=-43, 2-4=-36, 4-8=-61, 8-9=-56, 10-15=-20, 5-20=-80
Horz: 1-2=-7, 4-8=-11, 8-9=-6
Drag: 3-4=0
Concentrated Loads (lb)
Vert: 22=-2510(B)

36) Reversal: Dead + 0.75 Roof Live (bal.) + 0.75 Attic Floor + 0.75(0.6 MWFRS Wind (Neg. Int) 1st Parallel): Lumber Increase=1.60, Plate Increase=1.60
Uniform Loads (plf)
Vert: 1-2=-36, 2-4=-45, 4-8=-45, 8-9=-40, 10-15=-20, 5-20=-80
Horz: 1-2=-14, 4-8=5, 8-9=10
Drag: 3-4=0
Concentrated Loads (lb)
Vert: 22=-2514(B)

37) Reversal: Dead + 0.75 Roof Live (bal.) + 0.75 Attic Floor + 0.75(0.6 MWFRS Wind (Neg. Int) 2nd Parallel): Lumber Increase=1.60, Plate Increase=1.60
Uniform Loads (plf)
Vert: 1-2=-45, 2-4=-45, 4-8=-36, 8-9=-31, 10-15=-20, 5-20=-80
Horz: 1-2=-5, 4-8=14, 8-9=19
Drag: 3-4=0
Concentrated Loads (lb)
Vert: 22=-2507(B)

Job	Truss	Truss Type	Qty	Ply	Lot 108 South Creek
J0623-3411	A3GE	GABLE	1	1	I59478540 Job Reference (optional)

Comtech, Inc, Fayetteville, NC - 28314, 8.430 s Jan 6 2022 MiTek Industries, Inc. Wed Jul 12 07:49:16 2023 Page 1

ID:C5NWnh8QZZzTasfLD?bt5jz_UVZ-RfC?PsB70Hq3NSgPqnL8w3uITXbGKWrCDoi7J4zJC?f

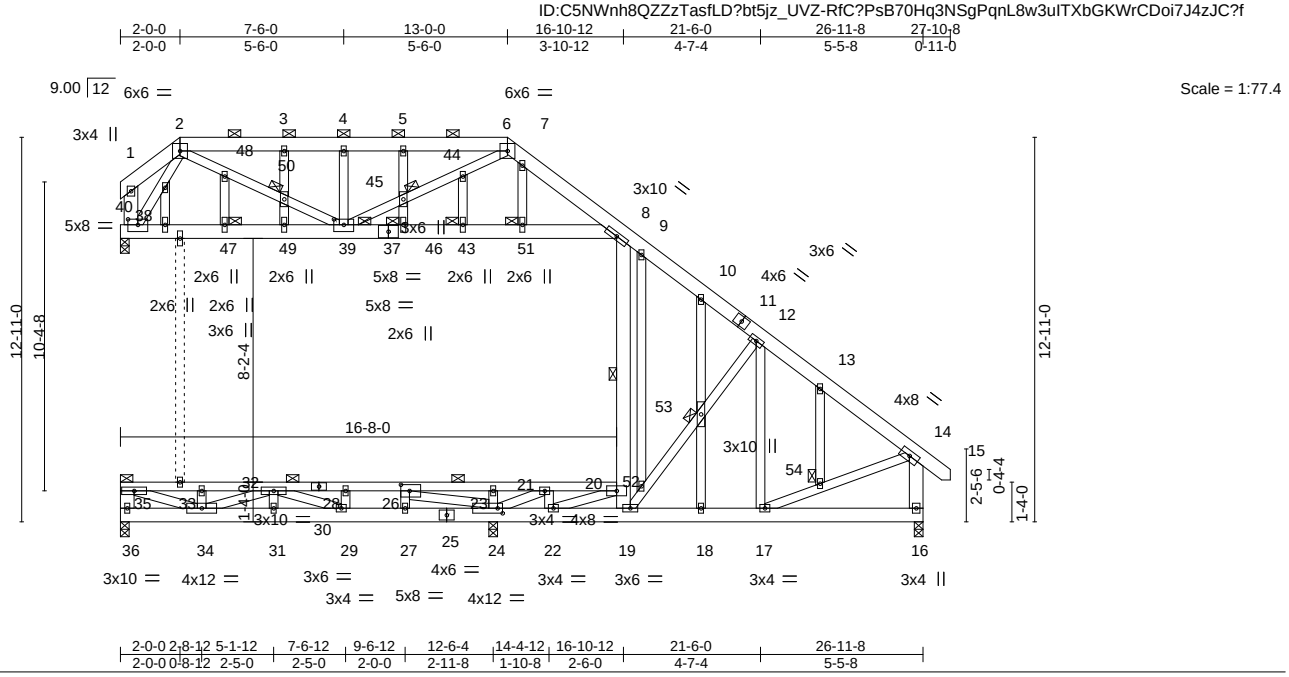

Plate Offsets (X,Y)-- [24:0-2-0,0-2-0], [26:0-3-8,0-2-8], [38:0-4-0,0-2-4], [39:0-4-0,0-2-4]

LOADING (psf)		SPACING- 2-0-0		CSI.		DEFL.	in	(loc)	l/defl	L/d	PLATES	GRIP
TCLL	20.0	Plate Grip DOL	1.15	TC	0.18	Vert(LL)	-0.12	18-19	>999	360	MT20	244/190
TCDL	10.0	Lumber DOL	1.15	BC	0.78	Vert(CT)	-0.20	18-19	>839	240		
BCLL	0.0 *	Rep Stress Incr	NO	WB	0.53	Horz(CT)	0.20	38	n/a	n/a		
BCDL	10.0	Code IRC2015/TPI2014		Matrix-S		Wind(LL)	0.19	18-19	>901	240	Weight: 366 lb	FT = 20%

LUMBER-

TOP CHORD 2x6 SP No.1
BOT CHORD 2x6 SP No.1 *Except*
30-35,20-30: 2x4 SP No.1
WEBS 2x4 SP No.2 *Except*
8-19,8-37,1-38,14-16,35-36,37-40: 2x6 SP No.1
OTHERS 2x4 SP No.2

BRACING-

TOP CHORD Structural wood sheathing directly applied or 6-0-0 oc purlins, except end verticals, and 2-0-0 oc purlins (6-0-0 max.): 2-6.
BOT CHORD Rigid ceiling directly applied or 6-0-0 oc bracing. Except:
5-2-0 oc bracing: 23-35
5-10-0 oc bracing: 20-23
WEBS 1 Row at midpt 8-19
JOINTS 1 Brace at Jt(s): 35, 39, 43, 45, 46, 47, 50, 51, 53, 54

REACTIONS. All bearings 0-3-8.
(lb) - Max Horz 36=-480(LC 13)
Max Uplift All uplift 100 lb or less at joint(s) except 38=-229(LC 9), 24=-149(LC 13)
Max Grav All reactions 250 lb or less at joint(s) except 36=677(LC 18), 38=499(LC 1), 16=569(LC 1), 24=2261(LC 21)

FORCES. (lb) - Max. Comp./Max. Ten. - All forces 250 (lb) or less except when shown.

TOP CHORD 2-3=-733/486, 3-4=-733/486, 4-5=-733/486, 5-6=-734/486, 6-7=-609/398, 7-8=-727/393, 10-12=-250/44, 12-13=-348/0, 13-14=-473/0, 14-16=-538/16
BOT CHORD 34-36=-355/480, 31-34=-391/1734, 29-31=-391/1734, 27-29=-1473/1946, 24-27=-1473/1946, 22-24=-1259/782, 19-22=-14/454, 18-19=0/345, 17-18=0/345, 33-35=-1217/0, 32-33=-1217/0, 28-32=-1494/1118, 26-28=-1494/1118, 23-26=-1191/2854, 21-23=-1191/2854, 20-21=-333/1006
WEBS 8-20=-557/401, 38-47=-150/271, 47-49=-150/271, 39-49=-150/271, 39-46=-329/550, 43-46=-329/550, 43-51=-329/550, 8-51=-329/550, 35-36=-601/0, 19-52=-638/423, 52-53=-612/406, 12-53=-605/403, 17-54=0/352, 14-54=0/343, 26-27=0/434, 33-34=-305/0, 31-32=0/300, 21-22=-526/865, 23-24=-342/0, 20-22=-1553/734, 34-35=0/1304, 32-34=-556/165, 29-32=-1452/246, 24-26=-2610/0, 21-24=-2075/966, 2-48=-327/550, 48-50=-309/520, 39-50=-315/530, 39-45=-188/251, 6-44=-194/261, 2-38=-518/286

NOTES-

1) Unbalanced roof live loads have been considered for this design.
2) Wind: ASCE 7-10; Vult=130mph Vasd=103mph; TCDL=6.0psf; BCDL=6.0psf; h=15ft; Cat. II; Exp C; Enclosed; MWFRS (envelope) gable end zone and C-C Exterior(2) zone;C-C for members and forces & MWFRS for reactions shown; Lumber DOL=1.60 plate grip DOL=1.60
3) Truss designed for wind loads in the plane of the truss only. For studs exposed to wind (normal to the face), see Standard Industry Gable End Details as applicable, or consult qualified building designer as per ANSI/TPI 1.
4) Provide adequate drainage to prevent water ponding.
5) All plates are 2x4 MT20 unless otherwise indicated.
6) Gable studs spaced at 2-0-0 oc.
7) This truss has been designed for a 10.0 psf bottom chord live load nonconcurrent with any other live loads.
8) * This truss has been designed for a live load of 30.0psf on the bottom chord in all areas where a rectangle 3-6-0 tall by 2-0-0 wide will fit between the bottom chord and any other members.

Continued on page 2

NORTH CAROLINA PROFESSIONAL SEAL 036322 ENGINEER ERIC A. GILBERT

July 12,2023

ENGINEERING BY TRENCO A MiTek Affiliate
818 Soundside Road
Edenton, NC 27932

NOTES-

9) Provide mechanical connection (by others) of truss to bearing plate capable of withstanding 229 lb uplift at joint 38 and 149 lb uplift at joint 24.
10) Load case(s) 1, 2, 3, 4, 5, 6, 7, 8, 9, 10, 11, 12, 13, 14, 15, 16, 17, 18, 19, 20, 21, 22, 23, 24, 25, 26, 27, 28, 29, 30, 31, 32, 33, 34, 35, 36, 37, 38, 39, 40, 41, 42, 43, 44, 45 has/have been modified. Building designer must review loads to verify that they are correct for the intended use of this truss.
11) Graphical purlin representation does not depict the size or the orientation of the purlin along the top and/or bottom chord.
12) Attic room checked for L/360 deflection.

LOAD CASE(S) Standard

1) Dead + Roof Live (balanced): Lumber Increase=1.15, Plate Increase=1.15
   Uniform Loads (plf)
   Vert: 1-2=-60, 2-6=-60, 6-14=-60, 14-15=-60, 16-36=-20, 20-35=-40
2) Dead + 0.75 Roof Live (balanced): Lumber Increase=1.15, Plate Increase=1.15
   Uniform Loads (plf)
   Vert: 1-2=-50, 2-6=-50, 6-14=-50, 14-15=-50, 16-36=-20, 20-35=-100
3) Dead + Uninhabitable Attic Without Storage: Lumber Increase=1.25, Plate Increase=1.25
   Uniform Loads (plf)
   Vert: 1-2=-20, 2-6=-20, 6-14=-20, 14-15=-20, 16-36=-40, 20-35=-60
4) Dead + 0.6 C-C Wind (Pos. Internal) Case 1: Lumber Increase=1.60, Plate Increase=1.60
   Uniform Loads (plf)
   Vert: 1-2=32, 2-6=36, 6-14=32, 14-15=25, 16-36=-12, 20-35=-32
   Horz: 1-2=-44, 6-14=44, 14-15=37
   Drag: 5-6=0
5) Dead + 0.6 C-C Wind (Pos. Internal) Case 2: Lumber Increase=1.60, Plate Increase=1.60
   Uniform Loads (plf)
   Vert: 1-2=32, 2-6=36, 6-14=32, 14-15=55, 16-36=-12, 20-35=-32
   Horz: 1-2=-44, 6-14=44, 14-15=67
   Drag: 5-6=0
6) Dead + 0.6 C-C Wind (Neg. Internal) Case 1: Lumber Increase=1.60, Plate Increase=1.60
   Uniform Loads (plf)
   Vert: 1-2=-57, 2-6=-34, 6-14=-57, 14-15=-50, 16-36=-20, 20-35=-40
   Horz: 1-2=37, 6-14=-37, 14-15=-30
   Drag: 5-6=-0
7) Dead + 0.6 C-C Wind (Neg. Internal) Case 2: Lumber Increase=1.60, Plate Increase=1.60
   Uniform Loads (plf)
   Vert: 1-2=-57, 2-6=-34, 6-14=-57, 14-15=10, 16-36=-20, 20-35=-40
   Horz: 1-2=37, 6-14=-37, 14-15=30
   Drag: 5-6=-0
8) Dead + 0.6 MWFRS Wind (Pos. Internal) Left: Lumber Increase=1.60, Plate Increase=1.60
   Uniform Loads (plf)
   Vert: 1-2=-15, 2-6=35, 6-14=15, 14-15=8, 16-36=-12, 20-35=-32
   Horz: 1-2=3, 6-14=27, 14-15=20
   Drag: 5-6=0
9) Dead + 0.6 MWFRS Wind (Pos. Internal) Right: Lumber Increase=1.60, Plate Increase=1.60
   Uniform Loads (plf)
   Vert: 1-2=15, 2-6=35, 6-14=-15, 14-15=0, 16-36=-12, 20-35=-32
   Horz: 1-2=-27, 6-14=-3, 14-15=12
   Drag: 5-6=0
10) Dead + 0.6 MWFRS Wind (Neg. Internal) Left: Lumber Increase=1.60, Plate Increase=1.60
    Uniform Loads (plf)
    Vert: 1-2=-37, 2-6=13, 6-14=-7, 14-15=-0, 16-36=-20, 20-35=-40
    Horz: 1-2=17, 6-14=13, 14-15=20
    Drag: 5-6=0
11) Dead + 0.6 MWFRS Wind (Neg. Internal) Right: Lumber Increase=1.60, Plate Increase=1.60
    Uniform Loads (plf)
    Vert: 1-2=-7, 2-6=13, 6-14=-37, 14-15=-30, 16-36=-20, 20-35=-40
    Horz: 1-2=-13, 6-14=-17, 14-15=-10
    Drag: 5-6=0
12) Dead + 0.6 MWFRS Wind (Pos. Internal) 1st Parallel: Lumber Increase=1.60, Plate Increase=1.60
    Uniform Loads (plf)
    Vert: 1-2=35, 2-6=15, 6-14=15, 14-15=8, 16-36=-12, 20-35=-32
    Horz: 1-2=-47, 6-14=27, 14-15=20
    Drag: 5-6=0
13) Dead + 0.6 MWFRS Wind (Pos. Internal) 2nd Parallel: Lumber Increase=1.60, Plate Increase=1.60
    Uniform Loads (plf)
    Vert: 1-2=15, 2-6=15, 6-14=35, 14-15=28, 16-36=-12, 20-35=-32
    Horz: 1-2=-27, 6-14=47, 14-15=40
    Drag: 5-6=0
14) Dead + 0.6 MWFRS Wind (Pos. Internal) 3rd Parallel: Lumber Increase=1.60, Plate Increase=1.60
    Uniform Loads (plf)
    Vert: 1-2=35, 2-6=15, 6-14=15, 14-15=8, 16-36=-12, 20-35=-32
    Horz: 1-2=-47, 6-14=27, 14-15=20
    Drag: 5-6=0
15) Dead + 0.6 MWFRS Wind (Pos. Internal) 4th Parallel: Lumber Increase=1.60, Plate Increase=1.60

Continued on page 3

LOAD CASE(S) Standard
Uniform Loads (plf)
Vert: 1-2=15, 2-6=15, 6-14=35, 14-15=28, 16-36=-12, 20-35=-32
Horz: 1-2=-27, 6-14=47, 14-15=40
Drag: 5-6=0

16) Dead + 0.6 MWFRS Wind (Neg. Internal) 1st Parallel: Lumber Increase=1.60, Plate Increase=1.60
Uniform Loads (plf)
Vert: 1-2=13, 2-6=-7, 6-14=-7, 14-15=-0, 16-36=-20, 20-35=-40
Horz: 1-2=-33, 6-14=13, 14-15=20
Drag: 5-6=0

17) Dead + 0.6 MWFRS Wind (Neg. Internal) 2nd Parallel: Lumber Increase=1.60, Plate Increase=1.60
Uniform Loads (plf)
Vert: 1-2=-7, 2-6=-7, 6-14=13, 14-15=20, 16-36=-20, 20-35=-40
Horz: 1-2=-13, 6-14=33, 14-15=40
Drag: 5-6=0

18) Dead: Lumber Increase=0.90, Plate Increase=0.90 Plt. metal=0.90
Uniform Loads (plf)
Vert: 1-2=-20, 2-6=-20, 6-14=-20, 14-15=-20, 16-36=-20, 20-35=-120

19) Dead: Lumber Increase=0.90, Plate Increase=0.90 Plt. metal=0.90
Uniform Loads (plf)
Vert: 1-2=-20, 2-6=-20, 6-14=-20, 14-15=-20, 16-36=-20, 20-35=-120

20) Dead + 0.75 Roof Live (bal.) + 0.75 Attic Floor + 0.75(0.6 MWFRS Wind (Neg. Int) Left): Lumber Increase=1.60, Plate Increase=1.60
Uniform Loads (plf)
Vert: 1-2=-63, 2-6=-25, 6-14=-40, 14-15=-35, 16-36=-20, 20-35=-100
Horz: 1-2=13, 6-14=10, 14-15=15
Drag: 5-6=0

21) Dead + 0.75 Roof Live (bal.) + 0.75 Attic Floor + 0.75(0.6 MWFRS Wind (Neg. Int) Right): Lumber Increase=1.60, Plate Increase=1.60
Uniform Loads (plf)
Vert: 1-2=-40, 2-6=-25, 6-14=-63, 14-15=-58, 16-36=-20, 20-35=-100
Horz: 1-2=-10, 6-14=-13, 14-15=-8
Drag: 5-6=0

22) Dead + 0.75 Roof Live (bal.) + 0.75 Attic Floor + 0.75(0.6 MWFRS Wind (Neg. Int) 1st Parallel): Lumber Increase=1.60, Plate Increase=1.60
Uniform Loads (plf)
Vert: 1-2=-25, 2-6=-40, 6-14=-40, 14-15=-35, 16-36=-20, 20-35=-100
Horz: 1-2=-25, 6-14=10, 14-15=15
Drag: 5-6=0

23) Dead + 0.75 Roof Live (bal.) + 0.75 Attic Floor + 0.75(0.6 MWFRS Wind (Neg. Int) 2nd Parallel): Lumber Increase=1.60, Plate Increase=1.60
Uniform Loads (plf)
Vert: 1-2=-40, 2-6=-40, 6-14=-25, 14-15=-20, 16-36=-20, 20-35=-100
Horz: 1-2=-10, 6-14=25, 14-15=30
Drag: 5-6=0

24) 1st Dead + Roof Live (unbalanced): Lumber Increase=1.15, Plate Increase=1.15
Uniform Loads (plf)
Vert: 1-2=-60, 2-6=-60, 6-14=-20, 14-15=-20, 16-36=-20, 20-35=-40

25) 2nd Dead + Roof Live (unbalanced): Lumber Increase=1.15, Plate Increase=1.15
Uniform Loads (plf)
Vert: 1-2=-20, 2-6=-60, 6-14=-60, 14-15=-60, 16-36=-20, 20-35=-40

26) 3rd Dead + 0.75 Roof Live (unbalanced): Lumber Increase=1.15, Plate Increase=1.15
Uniform Loads (plf)
Vert: 1-2=-50, 2-6=-50, 6-14=-20, 14-15=-20, 16-36=-20, 20-35=-100

27) 4th Dead + 0.75 Roof Live (unbalanced): Lumber Increase=1.15, Plate Increase=1.15
Uniform Loads (plf)
Vert: 1-2=-20, 2-6=-50, 6-14=-50, 14-15=-50, 16-36=-20, 20-35=-100

28) Reversal: Dead + 0.6 C-C Wind (Pos. Internal) Case 1: Lumber Increase=1.60, Plate Increase=1.60
Uniform Loads (plf)
Vert: 1-2=32, 2-6=36, 6-14=32, 14-15=25, 16-36=-12, 20-35=-32
Horz: 1-2=-44, 6-14=44, 14-15=37
Drag: 5-6=0

29) Reversal: Dead + 0.6 C-C Wind (Pos. Internal) Case 2: Lumber Increase=1.60, Plate Increase=1.60
Uniform Loads (plf)
Vert: 1-2=32, 2-6=36, 6-14=32, 14-15=55, 16-36=-12, 20-35=-32
Horz: 1-2=-44, 6-14=44, 14-15=67
Drag: 5-6=0

30) Reversal: Dead + 0.6 C-C Wind (Neg. Internal) Case 1: Lumber Increase=1.60, Plate Increase=1.60
Uniform Loads (plf)
Vert: 1-2=-57, 2-6=-34, 6-14=-57, 14-15=-50, 16-36=-20, 20-35=-40
Horz: 1-2=37, 6-14=-37, 14-15=-30
Drag: 5-6=-0

31) Reversal: Dead + 0.6 C-C Wind (Neg. Internal) Case 2: Lumber Increase=1.60, Plate Increase=1.60
Uniform Loads (plf)
Vert: 1-2=-57, 2-6=-34, 6-14=-57, 14-15=10, 16-36=-20, 20-35=-40
Horz: 1-2=37, 6-14=-37, 14-15=30
Drag: 5-6=-0

32) Reversal: Dead + 0.6 MWFRS Wind (Pos. Internal) Left: Lumber Increase=1.60, Plate Increase=1.60

Continued on page 4

LOAD CASE(S) Standard
Uniform Loads (plf)
Vert: 1-2=-15, 2-6=35, 6-14=15, 14-15=8, 16-36=-12, 20-35=-32
Horz: 1-2=3, 6-14=27, 14-15=20
Drag: 5-6=0

33) Reversal: Dead + 0.6 MWFRS Wind (Pos. Internal) Right: Lumber Increase=1.60, Plate Increase=1.60
Uniform Loads (plf)
Vert: 1-2=15, 2-6=35, 6-14=-15, 14-15=0, 16-36=-12, 20-35=-32
Horz: 1-2=-27, 6-14=-3, 14-15=12
Drag: 5-6=0

34) Reversal: Dead + 0.6 MWFRS Wind (Neg. Internal) Left: Lumber Increase=1.60, Plate Increase=1.60
Uniform Loads (plf)
Vert: 1-2=-37, 2-6=13, 6-14=-7, 14-15=-0, 16-36=-20, 20-35=-40
Horz: 1-2=17, 6-14=13, 14-15=20
Drag: 5-6=0

35) Reversal: Dead + 0.6 MWFRS Wind (Neg. Internal) Right: Lumber Increase=1.60, Plate Increase=1.60
Uniform Loads (plf)
Vert: 1-2=-7, 2-6=13, 6-14=-37, 14-15=-30, 16-36=-20, 20-35=-40
Horz: 1-2=-13, 6-14=-17, 14-15=-10
Drag: 5-6=0

36) Reversal: Dead + 0.6 MWFRS Wind (Pos. Internal) 1st Parallel: Lumber Increase=1.60, Plate Increase=1.60
Uniform Loads (plf)
Vert: 1-2=35, 2-6=15, 6-14=15, 14-15=8, 16-36=-12, 20-35=-32
Horz: 1-2=-47, 6-14=27, 14-15=20
Drag: 5-6=0

37) Reversal: Dead + 0.6 MWFRS Wind (Pos. Internal) 2nd Parallel: Lumber Increase=1.60, Plate Increase=1.60
Uniform Loads (plf)
Vert: 1-2=15, 2-6=15, 6-14=35, 14-15=28, 16-36=-12, 20-35=-32
Horz: 1-2=-27, 6-14=47, 14-15=40
Drag: 5-6=0

38) Reversal: Dead + 0.6 MWFRS Wind (Pos. Internal) 3rd Parallel: Lumber Increase=1.60, Plate Increase=1.60
Uniform Loads (plf)
Vert: 1-2=35, 2-6=15, 6-14=15, 14-15=8, 16-36=-12, 20-35=-32
Horz: 1-2=-47, 6-14=27, 14-15=20
Drag: 5-6=0

39) Reversal: Dead + 0.6 MWFRS Wind (Pos. Internal) 4th Parallel: Lumber Increase=1.60, Plate Increase=1.60
Uniform Loads (plf)
Vert: 1-2=15, 2-6=15, 6-14=35, 14-15=28, 16-36=-12, 20-35=-32
Horz: 1-2=-27, 6-14=47, 14-15=40
Drag: 5-6=0

40) Reversal: Dead + 0.6 MWFRS Wind (Neg. Internal) 1st Parallel: Lumber Increase=1.60, Plate Increase=1.60
Uniform Loads (plf)
Vert: 1-2=13, 2-6=-7, 6-14=-7, 14-15=-0, 16-36=-20, 20-35=-40
Horz: 1-2=-33, 6-14=13, 14-15=20
Drag: 5-6=0

41) Reversal: Dead + 0.6 MWFRS Wind (Neg. Internal) 2nd Parallel: Lumber Increase=1.60, Plate Increase=1.60
Uniform Loads (plf)
Vert: 1-2=-7, 2-6=-7, 6-14=13, 14-15=20, 16-36=-20, 20-35=-40
Horz: 1-2=-13, 6-14=33, 14-15=40
Drag: 5-6=0

42) Reversal: Dead + 0.75 Roof Live (bal.) + 0.75 Attic Floor + 0.75(0.6 MWFRS Wind (Neg. Int) Left): Lumber Increase=1.60, Plate Increase=1.60
Uniform Loads (plf)
Vert: 1-2=-63, 2-6=-25, 6-14=-40, 14-15=-35, 16-36=-20, 20-35=-100
Horz: 1-2=13, 6-14=10, 14-15=15
Drag: 5-6=0

43) Reversal: Dead + 0.75 Roof Live (bal.) + 0.75 Attic Floor + 0.75(0.6 MWFRS Wind (Neg. Int) Right): Lumber Increase=1.60, Plate Increase=1.60
Uniform Loads (plf)
Vert: 1-2=-40, 2-6=-25, 6-14=-63, 14-15=-58, 16-36=-20, 20-35=-100
Horz: 1-2=-10, 6-14=-13, 14-15=-8
Drag: 5-6=0

44) Reversal: Dead + 0.75 Roof Live (bal.) + 0.75 Attic Floor + 0.75(0.6 MWFRS Wind (Neg. Int) 1st Parallel): Lumber Increase=1.60, Plate Increase=1.60
Uniform Loads (plf)
Vert: 1-2=-25, 2-6=-40, 6-14=-40, 14-15=-35, 16-36=-20, 20-35=-100
Horz: 1-2=-25, 6-14=10, 14-15=15
Drag: 5-6=0

45) Reversal: Dead + 0.75 Roof Live (bal.) + 0.75 Attic Floor + 0.75(0.6 MWFRS Wind (Neg. Int) 2nd Parallel): Lumber Increase=1.60, Plate Increase=1.60
Uniform Loads (plf)
Vert: 1-2=-40, 2-6=-40, 6-14=-25, 14-15=-20, 16-36=-20, 20-35=-100
Horz: 1-2=-10, 6-14=25, 14-15=30
Drag: 5-6=0

Job	Truss	Truss Type	Qty	Ply	Lot 108 South Creek
J0623-3411	B1	ATTIC	4	1	I59478541 Job Reference (optional)

Comtech, Inc, Fayetteville, NC - 28314, 8.430 s Jan 6 2022 MiTek Industries, Inc. Wed Jul 12 07:49:20 2023 Page 1
ID:C5NWnh8QZZzTasfLD?bt5jz_UVZ-RfC?PsB70Hq3NSgPqnL8w3uITXbGKWrCDoi7J4zJC?f

-0-11-0	4-9-4	7-8-4	9-9-8	11-9-8	13-9-8	15-10-12	18-9-12	23-7-0	24-6-0
0-11-0	4-9-4	2-11-0	2-1-4	2-0-0	2-0-0	2-1-4	2-11-0	4-9-4	0-11-0

Scale = 1:73.7

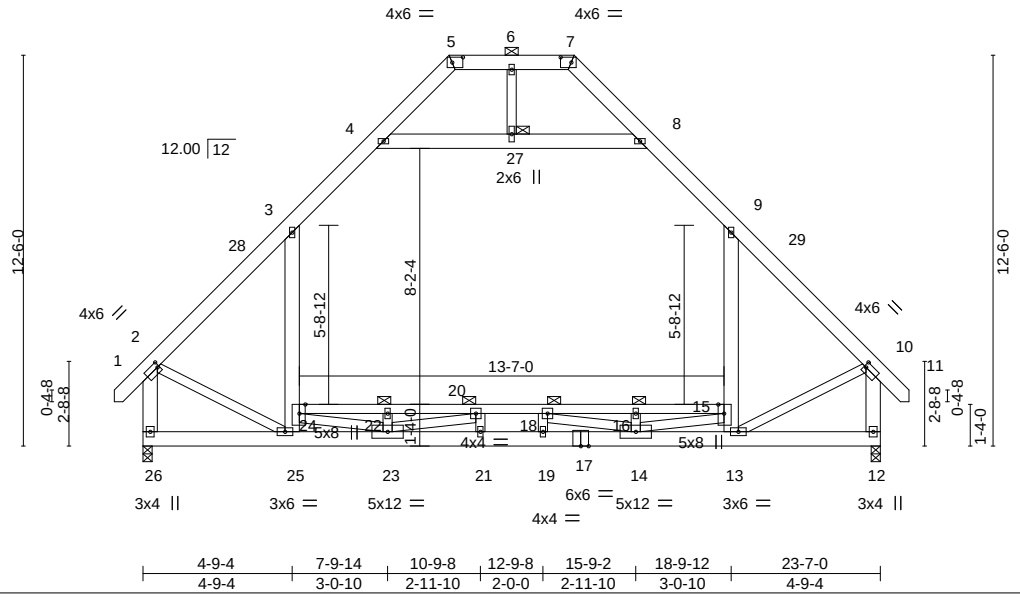

4-9-4	7-9-14	10-9-8	12-9-8	15-9-2	18-9-12	23-7-0
4-9-4	3-0-10	2-11-10	2-0-0	2-11-10	3-0-10	4-9-4

Plate Offsets (X,Y)-- [2:0-0-12,0-2-0], [5:0-4-2,0-2-0], [7:0-4-2,0-2-0], [10:0-0-12,0-2-0], [15:Edge,0-2-4], [24:Edge,0-2-4]

LOADING (psf)		**SPACING-** 2-0-0		**CSI.**		**DEFL.**	in	(loc)	l/defl	L/d	**PLATES**	**GRIP**
TCLL	20.0	Plate Grip DOL	1.15	TC	0.77	Vert(LL)	-0.20	19-21	>999	360	MT20	244/190
TCDL	10.0	Lumber DOL	1.15	BC	0.69	Vert(CT)	-0.37	19-21	>744	240		
BCLL	0.0 *	Rep Stress Incr	YES	WB	0.59	Horz(CT)	0.03	12	n/a	n/a		
BCDL	10.0	Code IRC2015/TPI2014		Matrix-S		Wind(LL)	0.10	25	>999	240	Weight: 254 lb	FT = 20%

LUMBER-
TOP CHORD 2x6 SP No.1
BOT CHORD 2x6 SP No.1 *Except*
15-24: 2x4 SP No.1
WEBS 2x4 SP No.2 *Except*
3-25,9-13,4-8,2-26,10-12: 2x6 SP No.1

BRACING-
TOP CHORD Structural wood sheathing directly applied or 4-5-11 oc purlins, except end verticals, and 2-0-0 oc purlins (6-0-0 max.): 5-7.
BOT CHORD Rigid ceiling directly applied or 10-0-0 oc bracing. Except: 3-6-0 oc bracing: 15-24
JOINTS 1 Brace at Jt(s): 27

REACTIONS. (size) 26=0-3-8, 12=0-3-8
Max Horz 26=-339(LC 10)
Max Grav 26=1739(LC 2), 12=1739(LC 2)

FORCES. (lb) - Max. Comp./Max. Ten. - All forces 250 (lb) or less except when shown.
TOP CHORD 2-3=-1565/0, 3-4=-1027/163, 4-5=-268/120, 7-8=-268/120, 8-9=-1028/164, 9-10=-1566/0, 2-26=-1742/0, 10-12=-1744/0
BOT CHORD 25-26=-291/415, 23-25=-240/1269, 21-23=0/3775, 19-21=0/3775, 14-19=0/3775, 13-14=0/1026, 22-24=-1937/0, 20-22=-1937/0, 18-20=-2923/0, 16-18=-1952/0, 15-16=-1952/0
WEBS 24-25=-321/112, 3-24=0/722, 13-15=-326/118, 9-15=0/722, 4-27=-1096/114, 8-27=-1096/114, 2-25=0/965, 10-13=0/967, 23-24=0/2093, 22-23=-391/0, 20-23=-1183/100, 14-18=-1170/84, 14-16=-391/0, 14-15=0/2093

NOTES-
1) Unbalanced roof live loads have been considered for this design.
2) Wind: ASCE 7-10; Vult=130mph Vasd=103mph; TCDL=6.0psf; BCDL=6.0psf; h=15ft; Cat. II; Exp C; Enclosed; MWFRS (envelope) and C-C Exterior(2) -0-9-6 to 3-7-7, Interior(1) 3-7-7 to 9-10-10, Exterior(2) 9-10-10 to 19-11-1, Interior(1) 19-11-1 to 24-4-6 zone; end vertical left and right exposed;C-C for members and forces & MWFRS for reactions shown; Lumber DOL=1.60 plate grip DOL=1.60
3) Provide adequate drainage to prevent water ponding.
4) All plates are 2x4 MT20 unless otherwise indicated.
5) This truss has been designed for a 10.0 psf bottom chord live load nonconcurrent with any other live loads.
6) * This truss has been designed for a live load of 30.0psf on the bottom chord in all areas where a rectangle 3-6-0 tall by 2-0-0 wide will fit between the bottom chord and any other members.
7) Ceiling dead load (10.0 psf) on member(s). 3-4, 8-9, 4-27, 8-27; Wall dead load (5.0psf) on member(s).3-24, 9-15
8) Bottom chord live load (40.0 psf) and additional bottom chord dead load (10.0 psf) applied only to room. 22-24, 20-22, 18-20, 16-18, 15-16
9) Graphical purlin representation does not depict the size or the orientation of the purlin along the top and/or bottom chord.
10) Attic room checked for L/360 deflection.

July 12,2023

ENGINEERING BY TRENCO A MiTek Affiliate
818 Soundside Road
Edenton, NC 27932

Job	Truss	Truss Type	Qty	Ply	Lot 108 South Creek
J0623-3411	B1GE	GABLE	1	1	I59478542 Job Reference (optional)

Comtech, Inc, Fayetteville, NC - 28314, 8.430 s Jan 6 2022 MiTek Industries, Inc. Wed Jul 12 07:49:21 2023 Page 1

ID:C5NWnh8QZZzTasfLD?bt5jz_UVZ-RfC?PsB70Hq3NSgPqnL8w3uITXbGKWrCDoi7J4zJC?f

-0-11-0	4-9-4	7-8-4	9-9-8	11-9-8	13-9-8	15-10-12	18-9-12	23-7-0	24-6-0
0-11-0	4-9-4	2-11-0	2-1-4	2-0-0	2-0-0	2-1-4	2-11-0	4-9-4	0-11-0

Scale = 1:72.7

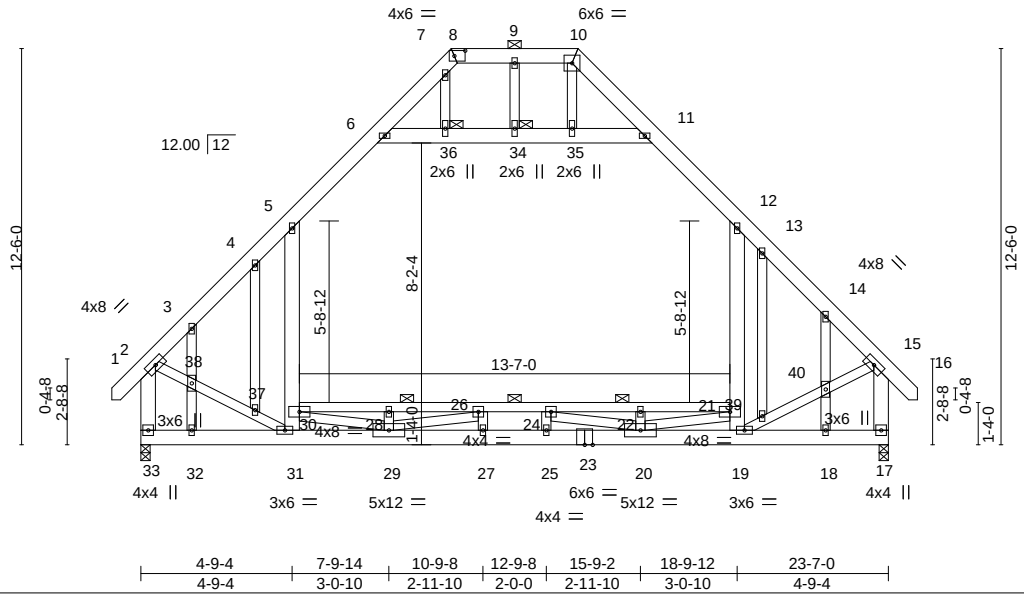

4-9-4	7-9-14	10-9-8	12-9-8	15-9-2	18-9-12	23-7-0
4-9-4	3-0-10	2-11-10	2-0-0	2-11-10	3-0-10	4-9-4

Plate Offsets (X,Y)-- [8:0-4-2,0-2-0]

LOADING (psf)		SPACING- 2-0-0		CSI.		DEFL. in (loc) l/defl L/d				PLATES	GRIP
TCLL	20.0	Plate Grip DOL	1.15	TC	0.77	Vert(LL)	-0.18 25-27	>999	360	MT20	244/190
TCDL	10.0	Lumber DOL	1.15	BC	0.91	Vert(CT)	-0.35 25-27	>803	240		
BCLL	0.0 *	Rep Stress Incr	YES	WB	0.71	Horz(CT)	0.03 17	n/a	n/a		
BCDL	10.0	Code IRC2015/TPI2014		Matrix-S		Wind(LL)	0.12 31	>999	240	Weight: 285 lb	FT = 20%

LUMBER-

TOP CHORD 2x6 SP No.1
BOT CHORD 2x6 SP No.1 *Except*
21-30: 2x4 SP No.1
WEBS 2x4 SP No.2 *Except*
5-31,12-19,6-11,2-33,15-17: 2x6 SP No.1
OTHERS 2x4 SP No.2

BRACING-

TOP CHORD Structural wood sheathing directly applied or 4-3-10 oc purlins, except end verticals, and 2-0-0 oc purlins (6-0-0 max.): 8-10.
BOT CHORD Rigid ceiling directly applied or 10-0-0 oc bracing. Except: 3-8-0 oc bracing: 21-30
JOINTS 1 Brace at Jt(s): 34, 36

REACTIONS. (size) 33=0-3-8, 17=0-3-8
Max Horz 33=-424(LC 10)
Max Grav 33=1739(LC 2), 17=1739(LC 2)

FORCES. (lb) - Max. Comp./Max. Ten. - All forces 250 (lb) or less except when shown.

TOP CHORD 2-3=-1366/0, 3-4=-1541/0, 4-5=-1575/15, 5-6=-1031/188, 6-7=-330/174, 10-11=-311/178, 11-12=-1029/188, 12-13=-1623/17, 13-14=-1556/0, 14-15=-1385/0, 2-33=-1407/0, 15-17=-1458/0
BOT CHORD 32-33=-384/504, 31-32=-384/504, 29-31=-378/1272, 27-29=0/3596, 25-27=0/3596, 20-25=0/3596, 19-20=-34/965, 28-30=-1789/0, 26-28=-1789/0, 24-26=-2726/0, 22-24=-1804/18, 21-22=-1804/18
WEBS 5-30=0/919, 19-21=-173/306, 12-21=0/995, 6-36=-1078/160, 34-36=-1077/160, 34-35=-1077/160, 11-35=-1085/160, 2-38=0/968, 37-38=0/1041, 31-37=0/966, 19-39=0/941, 39-40=0/1046, 15-40=0/981, 29-30=0/1959, 28-29=-395/0, 26-29=-1260/187, 20-24=-1260/165, 20-22=-395/0, 20-21=0/1952, 7-36=-43/265, 3-38=-324/70, 32-38=-494/66, 14-40=-334/71, 18-40=-482/65

NOTES-

1) Unbalanced roof live loads have been considered for this design.
2) Wind: ASCE 7-10; Vult=130mph Vasd=103mph; TCDL=6.0psf; BCDL=6.0psf; h=15ft; Cat. II; Exp C; Enclosed; MWFRS (envelope) gable end zone and C-C Exterior(2) zone; end vertical left and right exposed;C-C for members and forces & MWFRS for reactions shown; Lumber DOL=1.60 plate grip DOL=1.60
3) Truss designed for wind loads in the plane of the truss only. For studs exposed to wind (normal to the face), see Standard Industry Gable End Details as applicable, or consult qualified building designer as per ANSI/TPI 1.
4) Provide adequate drainage to prevent water ponding.
5) All plates are 2x4 MT20 unless otherwise indicated.
6) Gable studs spaced at 2-0-0 oc.
7) This truss has been designed for a 10.0 psf bottom chord live load nonconcurrent with any other live loads.
8) * This truss has been designed for a live load of 30.0psf on the bottom chord in all areas where a rectangle 3-6-0 tall by 2-0-0 wide will fit between the bottom chord and any other members.
9) Ceiling dead load (10.0 psf) on member(s). 5-6, 11-12, 6-36, 34-36, 34-35, 11-35; Wall dead load (5.0psf) on member(s).5-30, 12-21
10) Bottom chord live load (40.0 psf) and additional bottom chord dead load (10.0 psf) applied only to room. 28-30, 26-28, 24-26, 22-24 21-22

July 12,2023

Continued on page 2

ENGINEERING BY TRENCO A MiTek Affiliate
818 Soundside Road
Edenton, NC 27932

NOTES-

11) Graphical purlin representation does not depict the size or the orientation of the purlin along the top and/or bottom chord.
12) Attic room checked for L/360 deflection.

Job	Truss	Truss Type	Qty	Ply	Lot 108 South Creek
J0623-3411	B2	ATTIC	2	1	I59478543 Job Reference (optional)

Comtech, Inc, Fayetteville, NC - 28314, 8.430 s Jan 6 2022 MiTek Industries, Inc. Wed Jul 12 07:49:23 2023 Page 1

ID:C5NWnh8QZZzTasfLD?bt5jz_UVZ-RfC?PsB70Hq3NSgPqnL8w3uITXbGKWrCDoi7J4zJC?f

4-9-4	7-8-4	9-9-8	11-9-8	13-9-8	15-10-12	18-9-12	23-7-0	24-6-0
4-9-4	2-11-0	2-1-4	2-0-0	2-0-0	2-1-4	2-11-0	4-9-4	0-11-0

Scale = 1:73.7

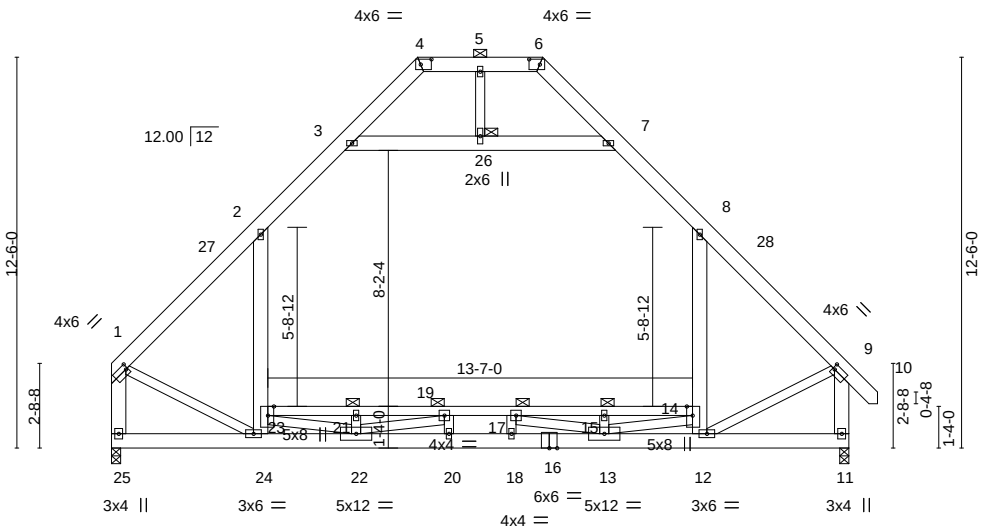

4-9-4	7-9-14	10-9-8	12-9-8	15-9-2	18-9-12	23-7-0
4-9-4	3-0-10	2-11-10	2-0-0	2-11-10	3-0-10	4-9-4

Plate Offsets (X,Y)-- [1:0-0-12,0-2-0], [4:0-4-2,0-2-0], [6:0-4-2,0-2-0], [9:0-0-12,0-2-0], [14:Edge,0-2-4], [23:Edge,0-2-4]

LOADING (psf)		**SPACING-** 2-0-0	**CSI.**		**DEFL.**	in	(loc)	l/defl	L/d	**PLATES**	**GRIP**
TCLL	20.0	Plate Grip DOL 1.15	TC	0.77	Vert(LL)	-0.20	18-20	>999	360	MT20	244/190
TCDL	10.0	Lumber DOL 1.15	BC	0.70	Vert(CT)	-0.38	18-20	>739	240		
BCLL	0.0 *	Rep Stress Incr YES	WB	0.59	Horz(CT)	0.03	11	n/a	n/a		
BCDL	10.0	Code IRC2015/TPI2014	Matrix-S		Wind(LL)	0.10	12	>999	240	Weight: 251 lb	FT = 20%

LUMBER-

TOP CHORD 2x6 SP No.1
BOT CHORD 2x6 SP No.1 *Except*
14-23: 2x4 SP No.1
WEBS 2x4 SP No.2 *Except*
2-24,8-12,3-7,1-25,9-11: 2x6 SP No.1

BRACING-

TOP CHORD Structural wood sheathing directly applied or 4-4-14 oc purlins, except end verticals, and 2-0-0 oc purlins (6-0-0 max.): 4-6.
BOT CHORD Rigid ceiling directly applied or 10-0-0 oc bracing. Except: 3-6-0 oc bracing: 14-23
JOINTS 1 Brace at Jt(s): 26

REACTIONS. (size) 25=0-3-8, 11=0-3-8
Max Horz 25=306(LC 11)
Max Grav 25=1688(LC 2), 11=1740(LC 2)

FORCES. (lb) - Max. Comp./Max. Ten. - All forces 250 (lb) or less except when shown.

TOP CHORD 1-2=-1558/0, 2-3=-1029/166, 3-4=-266/118, 6-7=-265/122, 7-8=-1025/156, 8-9=-1563/0, 1-25=-1701/0, 9-11=-1741/0
BOT CHORD 24-25=-271/350, 22-24=-221/1276, 20-22=0/3783, 18-20=0/3783, 13-18=0/3783, 12-13=0/1021, 21-23=-1944/0, 19-21=-1944/0, 17-19=-2930/0, 15-17=-1946/0, 14-15=-1946/0
WEBS 23-24=-357/119, 2-23=0/700, 12-14=-321/117, 8-14=0/724, 3-26=-1102/118, 7-26=-1102/118, 1-24=0/993, 9-12=0/965, 22-23=0/2092, 21-22=-391/0, 19-22=-1168/98, 13-17=-1170/70, 13-15=-391/0, 13-14=0/2096

NOTES-

1) Unbalanced roof live loads have been considered for this design.
2) Wind: ASCE 7-10; Vult=130mph Vasd=103mph; TCDL=6.0psf; BCDL=6.0psf; h=15ft; Cat. II; Exp C; Enclosed; MWFRS (envelope) and C-C Exterior(2) 0-2-12 to 4-9-4, Interior(1) 4-9-4 to 9-10-10, Exterior(2) 9-10-10 to 19-11-1, Interior(1) 19-11-1 to 24-4-6 zone; end vertical right exposed;C-C for members and forces & MWFRS for reactions shown; Lumber DOL=1.60 plate grip DOL=1.60
3) Provide adequate drainage to prevent water ponding.
4) All plates are 2x4 MT20 unless otherwise indicated.
5) This truss has been designed for a 10.0 psf bottom chord live load nonconcurrent with any other live loads.
6) * This truss has been designed for a live load of 30.0psf on the bottom chord in all areas where a rectangle 3-6-0 tall by 2-0-0 wide will fit between the bottom chord and any other members.
7) Ceiling dead load (10.0 psf) on member(s). 2-3, 7-8, 3-26, 7-26; Wall dead load (5.0psf) on member(s).2-23, 8-14
8) Bottom chord live load (40.0 psf) and additional bottom chord dead load (10.0 psf) applied only to room. 21-23, 19-21, 17-19, 15-17, 14-15
9) Graphical purlin representation does not depict the size or the orientation of the purlin along the top and/or bottom chord.
10) Attic room checked for L/360 deflection.

July 12,2023

ENGINEERING BY TRENCO A MiTek Affiliate
818 Soundside Road
Edenton, NC 27932

Job	Truss	Truss Type	Qty	Ply	Lot 108 South Creek
J0623-3411	B3	ATTIC	6	1	I59478544 Job Reference (optional)

Comtech, Inc, Fayetteville, NC - 28314, 8.430 s Jan 6 2022 MiTek Industries, Inc. Wed Jul 12 07:49:25 2023 Page 1
ID:C5NWnh8QZZzTasfLD?bt5jz_UVZ-RfC?PsB70Hq3NSgPqnL8w3uITXbGKWrCDoi7J4zJC?f

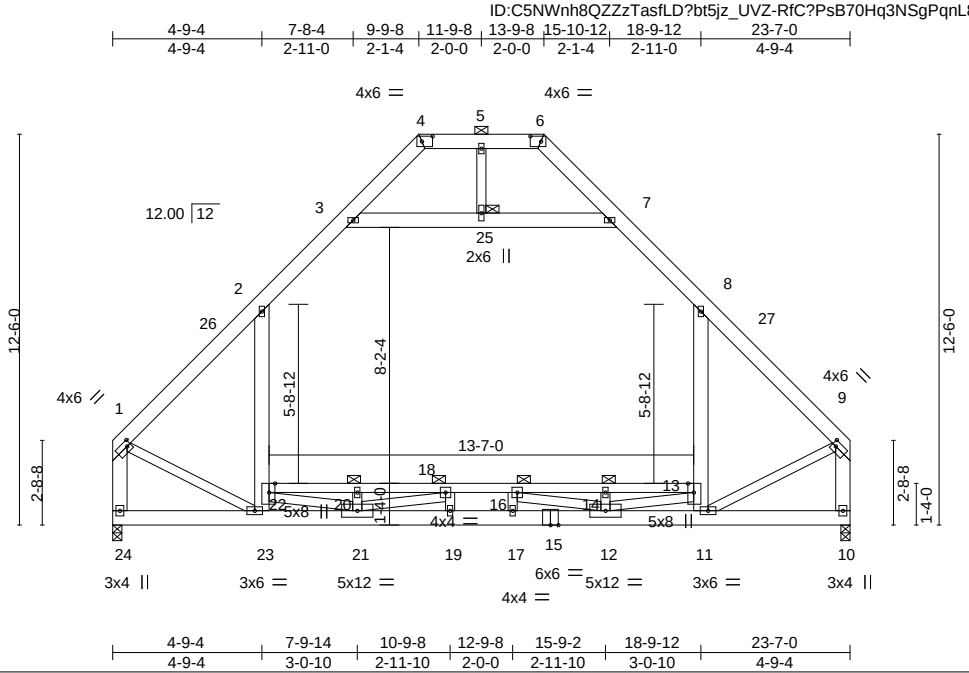

Plate Offsets (X,Y)-- [1:0-1-8,0-2-0], [4:0-4-2,0-2-0], [6:0-4-2,0-2-0], [9:0-1-8,0-2-0], [13:Edge,0-2-4], [22:Edge,0-2-4]

LOADING (psf)		**SPACING-** 2-0-0	**CSI.**		**DEFL.** in (loc) l/defl L/d		**PLATES**	**GRIP**
TCLL	20.0	Plate Grip DOL 1.15	TC	0.76	Vert(LL) -0.20 17-19 >999 360		MT20	244/190
TCDL	10.0	Lumber DOL 1.15	BC	0.70	Vert(CT) -0.38 17-19 >734 240			
BCLL	0.0 *	Rep Stress Incr YES	WB	0.59	Horz(CT) 0.03 10 n/a n/a			
BCDL	10.0	Code IRC2015/TPI2014	Matrix-S		Wind(LL) 0.10 11 >999 240		Weight: 249 lb	FT = 20%

LUMBER-
TOP CHORD 2x6 SP No.1
BOT CHORD 2x6 SP No.1 *Except*
13-22: 2x4 SP No.1
WEBS 2x4 SP No.2 *Except*
2-23,8-11,3-7,1-24,9-10: 2x6 SP No.1

BRACING-
TOP CHORD Structural wood sheathing directly applied or 4-4-14 oc purlins, except end verticals, and 2-0-0 oc purlins (6-0-0 max.): 4-6.
BOT CHORD Rigid ceiling directly applied or 10-0-0 oc bracing. Except: 3-6-0 oc bracing: 13-22
JOINTS 1 Brace at Jt(s): 25

REACTIONS. (size) 24=0-3-8, 10=0-3-8
Max Horz 24=298(LC 11)
Max Grav 24=1689(LC 2), 10=1689(LC 2)

FORCES. (lb) - Max. Comp./Max. Ten. - All forces 250 (lb) or less except when shown.
TOP CHORD 1-2=-1559/0, 2-3=-1029/163, 3-4=-263/118, 6-7=-263/121, 7-8=-1027/156, 8-9=-1554/0, 1-24=-1702/0, 9-10=-1700/0
BOT CHORD 23-24=-270/333, 21-23=-237/1260, 19-21=0/3790, 17-19=0/3790, 12-17=0/3790, 11-12=0/1046, 20-22=-1941/0, 18-20=-1941/0, 16-18=-2937/0, 14-16=-1964/0, 13-14=-1964/0
WEBS 22-23=-354/121, 2-22=0/702, 11-13=-352/118, 8-13=0/702, 3-25=-1107/115, 7-25=-1107/115, 1-23=0/993, 9-11=0/998, 21-22=0/2095, 20-21=-390/0, 18-21=-1177/93, 12-16=-1158/75, 12-14=-390/0, 12-13=0/2095

NOTES-
1) Unbalanced roof live loads have been considered for this design.
2) Wind: ASCE 7-10; Vult=130mph Vasd=103mph; TCDL=6.0psf; BCDL=6.0psf; h=15ft; Cat. II; Exp C; Enclosed; MWFRS (envelope) and C-C Exterior(2) 0-2-12 to 4-9-4, Interior(1) 4-9-4 to 9-10-10, Exterior(2) 9-10-10 to 19-11-1, Interior(1) 19-11-1 to 23-4-4 zone; end vertical right exposed;C-C for members and forces & MWFRS for reactions shown; Lumber DOL=1.60 plate grip DOL=1.60
3) Provide adequate drainage to prevent water ponding.
4) All plates are 2x4 MT20 unless otherwise indicated.
5) This truss has been designed for a 10.0 psf bottom chord live load nonconcurrent with any other live loads.
6) * This truss has been designed for a live load of 30.0psf on the bottom chord in all areas where a rectangle 3-6-0 tall by 2-0-0 wide will fit between the bottom chord and any other members.
7) Ceiling dead load (10.0 psf) on member(s). 2-3, 7-8, 3-25, 7-25; Wall dead load (5.0psf) on member(s).2-22, 8-13
8) Bottom chord live load (40.0 psf) and additional bottom chord dead load (10.0 psf) applied only to room. 20-22, 18-20, 16-18, 14-16, 13-14
9) Graphical purlin representation does not depict the size or the orientation of the purlin along the top and/or bottom chord.
10) Attic room checked for L/360 deflection.

July 12,2023

ENGINEERING BY TRENCO A MiTek Affiliate
818 Soundside Road
Edenton, NC 27932

Job	Truss	Truss Type	Qty	Ply	Lot 108 South Creek
J0623-3411	C1	COMMON	4	1	I59478545 Job Reference (optional)

Comtech, Inc, Fayetteville, NC - 28314, 8.430 s Jan 6 2022 MiTek Industries, Inc. Wed Jul 12 07:49:25 2023 Page 1
ID:C5NWnh8QZZzTasfLD?bt5jz_UVZ-RfC?PsB70Hq3NSgPqnL8w3uITXbGKWrCDoi7J4zJC?f

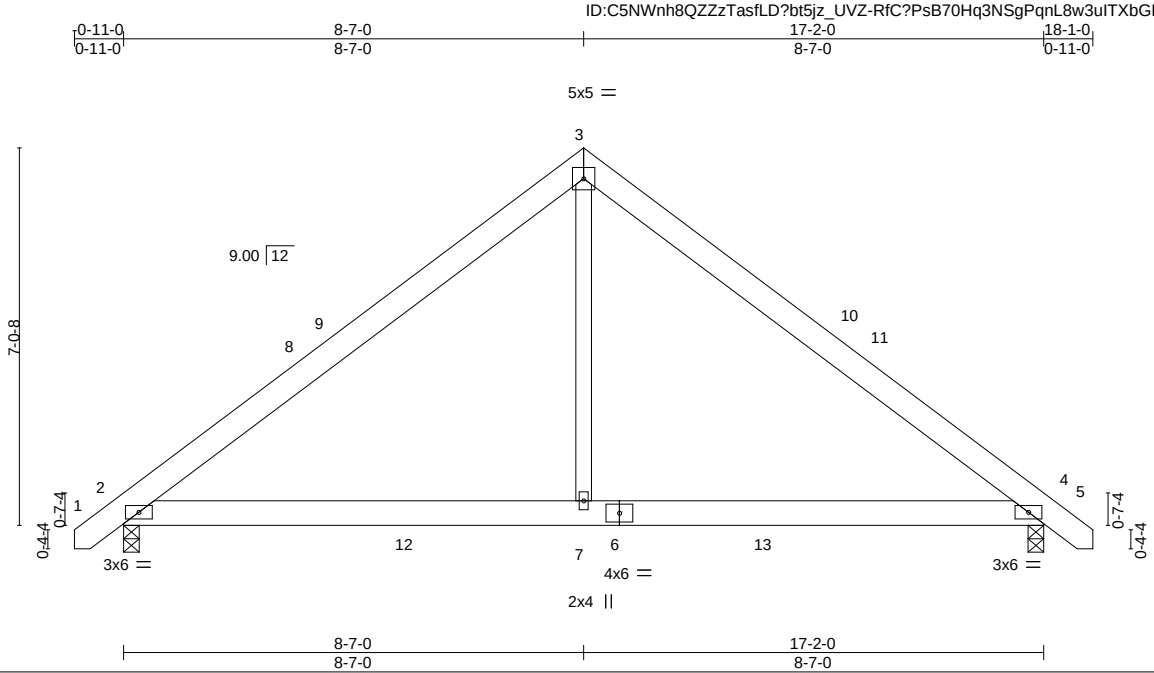

LOADING (psf)			SPACING- 2-0-0		CSI.		DEFL.	in	(loc)	l/defl	L/d	PLATES	GRIP
TCLL	20.0		Plate Grip DOL	1.15	TC	0.34	Vert(LL)	-0.04	4-7	>999	360	MT20	244/190
TCDL	10.0		Lumber DOL	1.15	BC	0.33	Vert(CT)	-0.08	4-7	>999	240		
BCLL	0.0	*	Rep Stress Incr	YES	WB	0.13	Horz(CT)	0.01	4	n/a	n/a		
BCDL	10.0		Code IRC2015/TPI2014		Matrix-S		Wind(LL)	0.03	2-7	>999	240	Weight: 106 lb	FT = 20%

LUMBER-
TOP CHORD 2x6 SP No.1
BOT CHORD 2x6 SP No.1
WEBS 2x4 SP No.2

BRACING-
TOP CHORD Structural wood sheathing directly applied or 6-0-0 oc purlins.
BOT CHORD Rigid ceiling directly applied or 10-0-0 oc bracing.

REACTIONS. (size) 4=0-3-8, 2=0-3-8
Max Horz 2=168(LC 11)
Max Uplift 4=-45(LC 13), 2=-45(LC 12)
Max Grav 4=825(LC 20), 2=825(LC 19)

FORCES. (lb) - Max. Comp./Max. Ten. - All forces 250 (lb) or less except when shown.
TOP CHORD 2-3=-961/184, 3-4=-961/184
BOT CHORD 2-7=0/696, 4-7=0/696
WEBS 3-7=0/580

NOTES-
1) Unbalanced roof live loads have been considered for this design.
2) Wind: ASCE 7-10; Vult=130mph Vasd=103mph; TCDL=6.0psf; BCDL=6.0psf; h=15ft; Cat. II; Exp C; Enclosed; MWFRS (envelope) and C-C Exterior(2) -0-9-4 to 3-7-9, Interior(1) 3-7-9 to 8-7-0, Exterior(2) 8-7-0 to 12-11-13, Interior(1) 12-11-13 to 17-11-4 zone;C-C for members and forces & MWFRS for reactions shown; Lumber DOL=1.60 plate grip DOL=1.60
3) This truss has been designed for a 10.0 psf bottom chord live load nonconcurrent with any other live loads.
4) * This truss has been designed for a live load of 30.0psf on the bottom chord in all areas where a rectangle 3-6-0 tall by 2-0-0 wide will fit between the bottom chord and any other members, with BCDL = 10.0psf.
5) Provide mechanical connection (by others) of truss to bearing plate capable of withstanding 100 lb uplift at joint(s) 4, 2.

NORTH CAROLINA PROFESSIONAL SEAL 036322 ENGINEER ERIC A. GILBERT

July 12,2023

ENGINEERING BY TRENCO A MiTek Affiliate
818 Soundside Road
Edenton, NC 27932

Job	Truss	Truss Type	Qty	Ply	Lot 108 South Creek
J0623-3411	C1-GR	COMMON	1	2	I59478546 Job Reference (optional)

Comtech, Inc, Fayetteville, NC - 28314, 8.430 s Jan 6 2022 MiTek Industries, Inc. Wed Jul 12 07:49:28 2023 Page 1
ID:C5NWnh8QZZzTasfLD?bt5jz_UVZ-RfC?PsB70Hq3NSgPqnL8w3uITXbGKWrCDoi7J4zJC?f

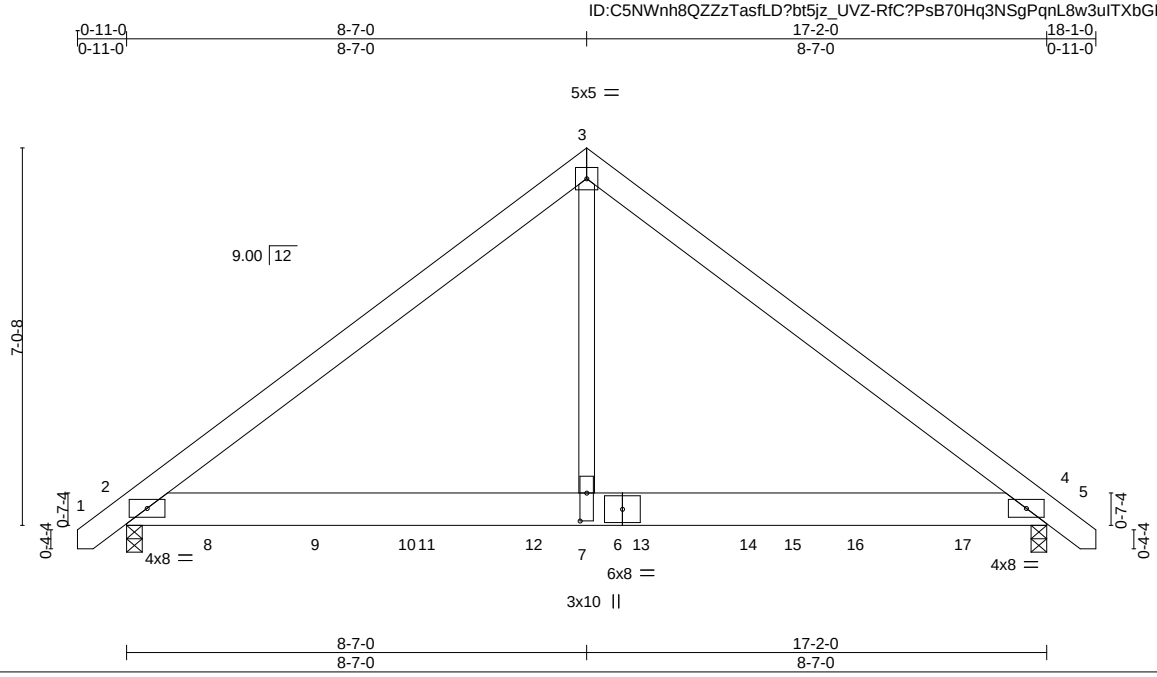

Plate Offsets (X,Y)-- [7:0-6-4,0-1-8]

LOADING (psf)		SPACING- 2-0-0		CSI.		DEFL. in (loc) l/defl L/d					PLATES	GRIP
TCLL	20.0	Plate Grip DOL	1.15	TC	0.28	Vert(LL)	-0.06	4-7	>999	360	MT20	244/190
TCDL	10.0	Lumber DOL	1.15	BC	0.39	Vert(CT)	-0.11	4-7	>999	240		
BCLL	0.0 *	Rep Stress Incr	NO	WB	0.41	Horz(CT)	0.01	4	n/a	n/a		
BCDL	10.0	Code IRC2015/TPI2014		Matrix-S		Wind(LL)	0.04	2-7	>999	240	Weight: 236 lb	FT = 20%

LUMBER-
TOP CHORD 2x6 SP No.1
BOT CHORD 2x8 SP 2400F 2.0E
WEBS 2x4 SP No.2

BRACING-
TOP CHORD Structural wood sheathing directly applied or 6-0-0 oc purlins.
BOT CHORD Rigid ceiling directly applied or 10-0-0 oc bracing.

REACTIONS. (size) 4=0-3-8, 2=0-3-8
Max Horz 2=168(LC 26)
Max Uplift 4=-194(LC 9), 2=-194(LC 8)
Max Grav 4=3077(LC 2), 2=3066(LC 2)

FORCES. (lb) - Max. Comp./Max. Ten. - All forces 250 (lb) or less except when shown.
TOP CHORD 2-3=-3271/244, 3-4=-3271/244
BOT CHORD 2-7=-96/2538, 4-7=-96/2538
WEBS 3-7=-116/3373

NOTES-
1) 2-ply truss to be connected together with 10d (0.131"x3") nails as follows:
Top chords connected as follows: 2x6 - 2 rows staggered at 0-9-0 oc.
Bottom chords connected as follows: 2x8 - 2 rows staggered at 0-9-0 oc.
Webs connected as follows: 2x4 - 1 row at 0-9-0 oc.
2) All loads are considered equally applied to all plies, except if noted as front (F) or back (B) face in the LOAD CASE(S) section. Ply to ply connections have been provided to distribute only loads noted as (F) or (B), unless otherwise indicated.
3) Unbalanced roof live loads have been considered for this design.
4) Wind: ASCE 7-10; Vult=130mph Vasd=103mph; TCDL=6.0psf; BCDL=6.0psf; h=15ft; Cat. II; Exp C; Enclosed; MWFRS (envelope); Lumber DOL=1.60 plate grip DOL=1.60
5) This truss has been designed for a 10.0 psf bottom chord live load nonconcurrent with any other live loads.
6) * This truss has been designed for a live load of 30.0psf on the bottom chord in all areas where a rectangle 3-6-0 tall by 2-0-0 wide will fit between the bottom chord and any other members, with BCDL = 10.0psf.
7) Provide mechanical connection (by others) of truss to bearing plate capable of withstanding 100 lb uplift at joint(s) except (jt=lb) 4=194, 2=194.
8) Hanger(s) or other connection device(s) shall be provided sufficient to support concentrated load(s) 589 lb down and 45 lb up at 1-7-4, 589 lb down and 45 lb up at 3-7-4, 570 lb down and 45 lb up at 5-7-4, 570 lb down and 45 lb up at 7-7-4, 570 lb down and 45 lb up at 9-7-4, 570 lb down and 45 lb up at 11-7-4, and 589 lb down and 45 lb up at 13-7-4, and 589 lb down and 45 lb up at 15-7-4 on bottom chord. The design/selection of such connection device(s) is the responsibility of others.

LOAD CASE(S) Standard
1) Dead + Roof Live (balanced): Lumber Increase=1.15, Plate Increase=1.15
Uniform Loads (plf)
Vert: 1-3=-60, 3-5=-60, 2-4=-20

July 12,2023

Continued on page 2

ENGINEERING BY TRENCO A MiTek Affiliate
818 Soundside Road
Edenton, NC 27932

LOAD CASE(S) Standard
Concentrated Loads (lb)
Vert: 8=-570(F) 9=-570(F) 11=-570(F) 12=-570(F) 13=-570(F) 14=-570(F) 16=-570(F) 17=-570(F)

Job	Truss	Truss Type	Qty	Ply	Lot 108 South Creek
J0623-3411	C1GE	GABLE	1	1	I59478547 Job Reference (optional)

Comtech, Inc, Fayetteville, NC - 28314, 8.430 s Jan 6 2022 MiTek Industries, Inc. Wed Jul 12 07:49:27 2023 Page 1
ID:C5NWnh8QZZzTasfLD?bt5jz_UVZ-RfC?PsB70Hq3NSgPqnL8w3uITXbGKWrCDoi7J4zJC?f

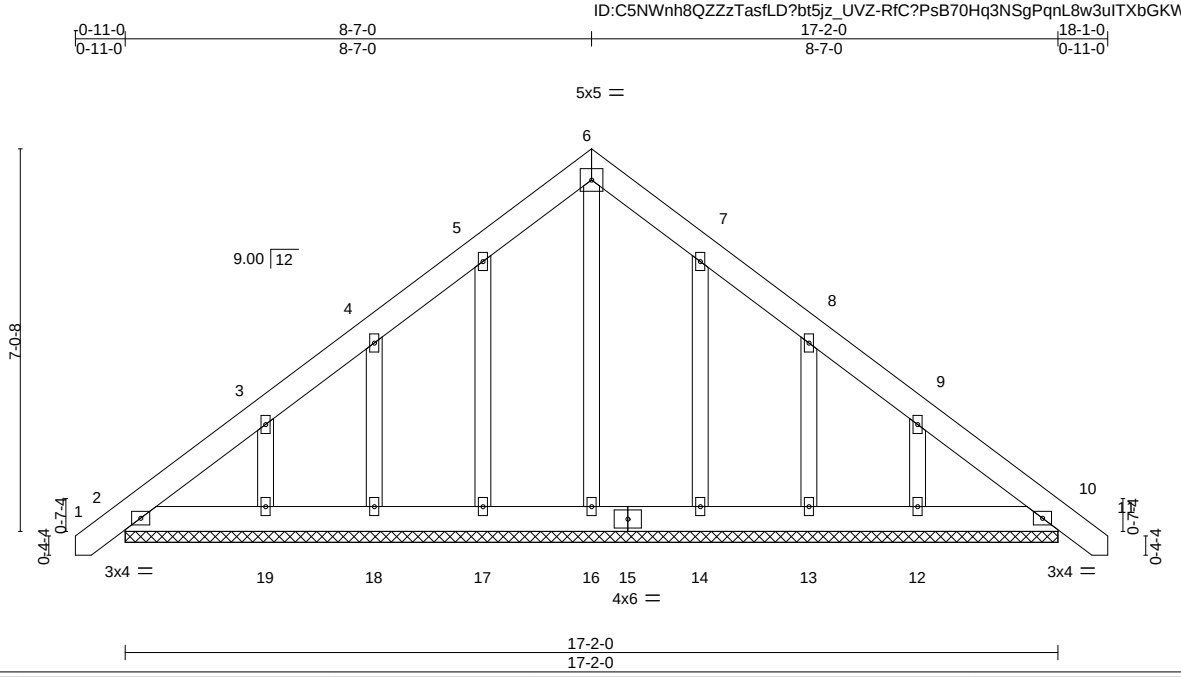

LOADING (psf)		SPACING- 2-0-0		CSI.		DEFL. in (loc) l/defl L/d		PLATES	GRIP
TCLL	20.0	Plate Grip DOL	1.15	TC	0.03	Vert(LL) 0.00 10 n/r 120		MT20	244/190
TCDL	10.0	Lumber DOL	1.15	BC	0.02	Vert(CT) 0.00 10 n/r 120			
BCLL	0.0 *	Rep Stress Incr	YES	WB	0.08	Horz(CT) 0.00 10 n/a n/a			
BCDL	10.0	Code IRC2015/TPI2014		Matrix-S				Weight: 133 lb	FT = 20%

LUMBER-
TOP CHORD 2x6 SP No.1
BOT CHORD 2x6 SP No.1
OTHERS 2x4 SP No.2

BRACING-
TOP CHORD Structural wood sheathing directly applied or 6-0-0 oc purlins.
BOT CHORD Rigid ceiling directly applied or 10-0-0 oc bracing.

REACTIONS. All bearings 17-2-0.
(lb) - Max Horz 2=210(LC 11)
Max Uplift All uplift 100 lb or less at joint(s) 2, 17, 18, 14 except 19=-129(LC 12), 13=-101(LC 13), 12=-128(LC 13)
Max Grav All reactions 250 lb or less at joint(s) 10, 2, 16, 17, 18, 19, 14, 13, 12

FORCES. (lb) - Max. Comp./Max. Ten. - All forces 250 (lb) or less except when shown.

NOTES-
1) Unbalanced roof live loads have been considered for this design.
2) Wind: ASCE 7-10; Vult=130mph Vasd=103mph; TCDL=6.0psf; BCDL=6.0psf; h=15ft; Cat. II; Exp C; Enclosed; MWFRS (envelope) gable end zone and C-C Exterior(2) zone;C-C for members and forces & MWFRS for reactions shown; Lumber DOL=1.60 plate grip DOL=1.60
3) Truss designed for wind loads in the plane of the truss only. For studs exposed to wind (normal to the face), see Standard Industry Gable End Details as applicable, or consult qualified building designer as per ANSI/TPI 1.
4) All plates are 2x4 MT20 unless otherwise indicated.
5) Gable requires continuous bottom chord bearing.
6) Gable studs spaced at 2-0-0 oc.
7) This truss has been designed for a 10.0 psf bottom chord live load nonconcurrent with any other live loads.
8) * This truss has been designed for a live load of 30.0psf on the bottom chord in all areas where a rectangle 3-6-0 tall by 2-0-0 wide will fit between the bottom chord and any other members.
9) Provide mechanical connection (by others) of truss to bearing plate capable of withstanding 100 lb uplift at joint(s) 2, 17, 18, 14 except (jt=lb) 19=129, 13=101, 12=128.

July 12,2023

ENGINEERING BY TRENCO
A MiTek Affiliate
818 Soundside Road
Edenton, NC 27932

Job	Truss	Truss Type	Qty	Ply	Lot 108 South Creek
J0623-3411	D1	COMMON	5	1	I59478548 Job Reference (optional)

Comtech, Inc, Fayetteville, NC - 28314, 8.430 s Jan 6 2022 MiTek Industries, Inc. Wed Jul 12 07:49:29 2023 Page 1
ID:C5NWnh8QZZzTasfLD?bt5jz_UVZ-RfC?PsB70Hq3NSgPqnL8w3uITXbGKWrCDoi7J4zJC?f

-0-11-0 | 7-11-8 | 15-11-0 | 16-10-0
0-11-0 | 7-11-8 | 7-11-8 | 0-11-0

Scale = 1:28.5

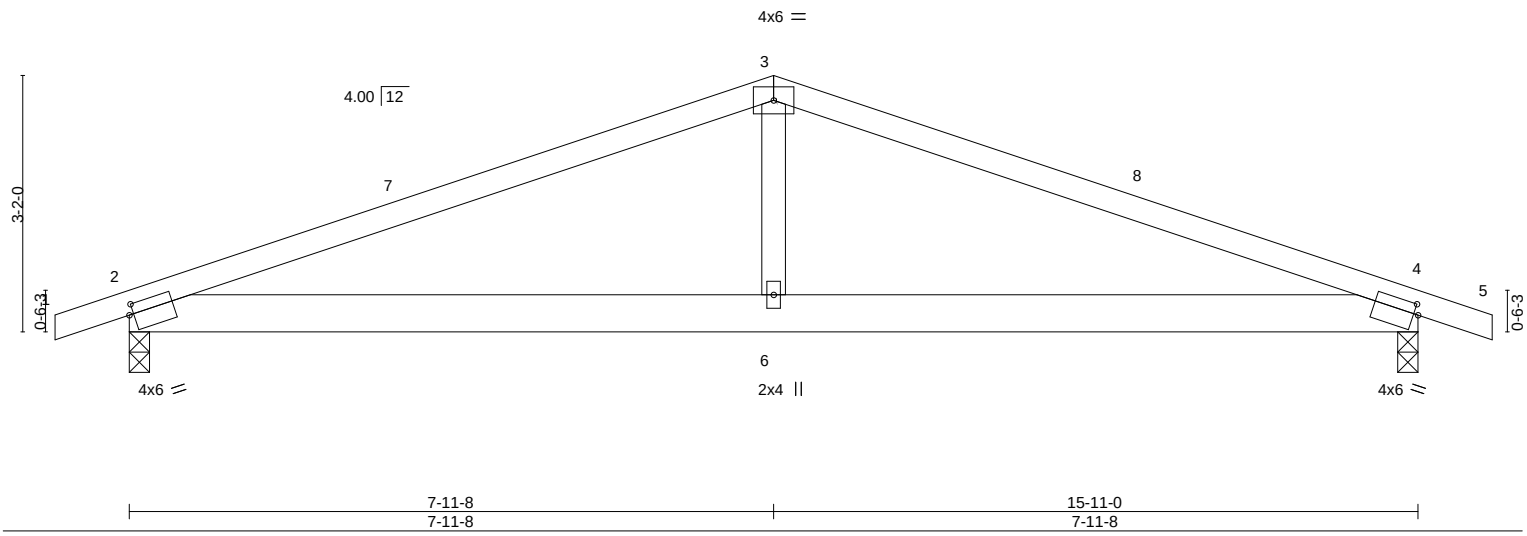

Plate Offsets (X,Y)-- [2:0-0-11,0-1-8], [4:0-0-11,0-1-8]

LOADING (psf)		SPACING-	2-0-0	CSI.		DEFL.	in	(loc)	l/defl	L/d	PLATES	GRIP
TCLL	20.0	Plate Grip DOL	1.15	TC	0.60	Vert(LL)	0.09	2-6	>999	240	MT20	244/190
TCDL	10.0	Lumber DOL	1.15	BC	0.32	Vert(CT)	-0.09	4-6	>999	240		
BCLL	0.0 *	Rep Stress Incr	YES	WB	0.09	Horz(CT)	0.01	4	n/a	n/a		
BCDL	10.0	Code IRC2015/TPI2014		Matrix-S							Weight: 69 lb	FT = 20%

LUMBER-
TOP CHORD 2x4 SP No.1
BOT CHORD 2x6 SP No.1
WEBS 2x4 SP No.2

BRACING-
TOP CHORD Structural wood sheathing directly applied or 4-6-1 oc purlins.
BOT CHORD Rigid ceiling directly applied or 7-5-9 oc bracing.

REACTIONS. (size) 2=0-3-0, 4=0-3-0
Max Horz 2=-35(LC 13)
Max Uplift 2=-262(LC 8), 4=-262(LC 9)
Max Grav 2=689(LC 1), 4=689(LC 1)

FORCES. (lb) - Max. Comp./Max. Ten. - All forces 250 (lb) or less except when shown.
TOP CHORD 2-3=-1155/1151, 3-4=-1155/1153
BOT CHORD 2-6=-991/1011, 4-6=-991/1011
WEBS 3-6=-502/399

NOTES-
1) Unbalanced roof live loads have been considered for this design.
2) Wind: ASCE 7-10; Vult=130mph Vasd=103mph; TCDL=6.0psf; BCDL=6.0psf; h=15ft; Cat. II; Exp C; Enclosed; MWFRS (envelope) and C-C Exterior(2) -0-11-0 to 3-5-13, Interior(1) 3-5-13 to 7-11-8, Exterior(2) 7-11-8 to 12-4-5, Interior(1) 12-4-5 to 16-10-0 zone; porch left and right exposed;C-C for members and forces & MWFRS for reactions shown; Lumber DOL=1.60 plate grip DOL=1.60
3) This truss has been designed for a 10.0 psf bottom chord live load nonconcurrent with any other live loads.
4) * This truss has been designed for a live load of 30.0psf on the bottom chord in all areas where a rectangle 3-6-0 tall by 2-0-0 wide will fit between the bottom chord and any other members.
5) Provide mechanical connection (by others) of truss to bearing plate capable of withstanding 100 lb uplift at joint(s) except (jt=lb) 2=262, 4=262.

July 12,2023

ENGINEERING BY TRENCO A MiTek Affiliate
818 Soundside Road
Edenton, NC 27932

Job	Truss	Truss Type	Qty	Ply	Lot 108 South Creek
J0623-3411	D1GE	GABLE	1	1	I59478549 Job Reference (optional)

Comtech, Inc, Fayetteville, NC - 28314, 8.430 s Jan 6 2022 MiTek Industries, Inc. Wed Jul 12 07:49:30 2023 Page 1
ID:C5NWnh8QZZzTasfLD?bt5jz_UVZ-RfC?PsB70Hq3NSgPqnL8w3uITXbGKWrCDoi7J4zJC?f

-0-11-0 | 7-11-8 | 15-11-0 | 16-10-0
0-11-0 | 7-11-8 | 7-11-8 | 0-11-0

Scale = 1:28.5

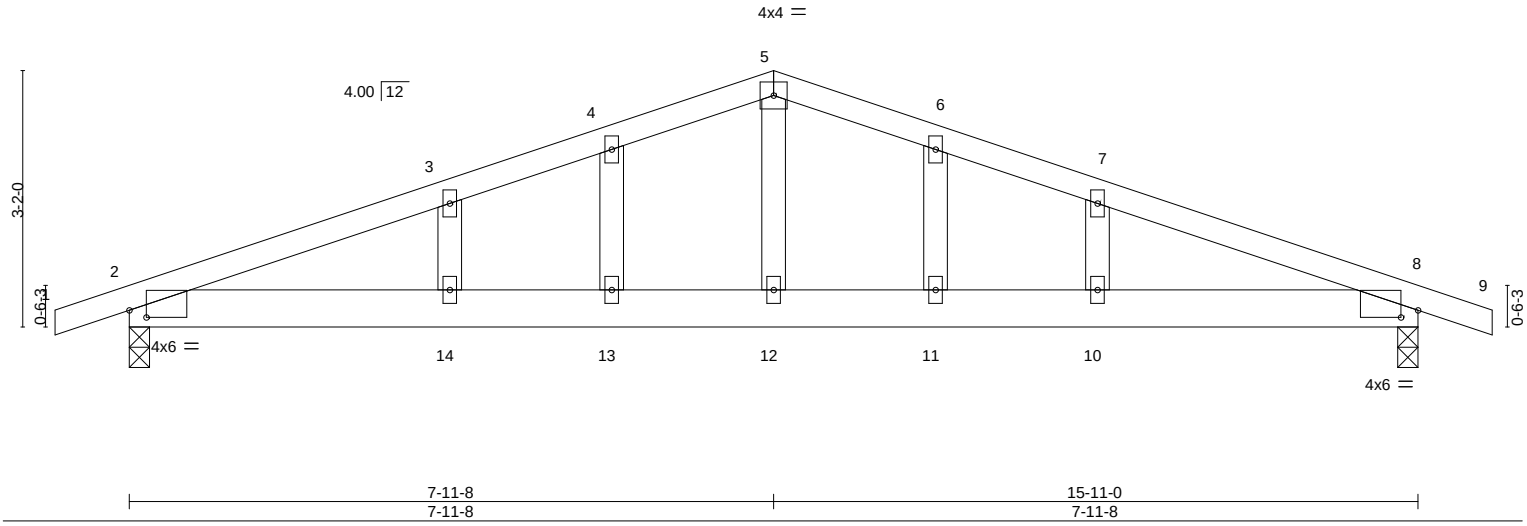

Plate Offsets (X,Y)-- [2:0-2-8,0-1-1], [8:0-2-8,0-1-1]

LOADING (psf)		SPACING- 2-0-0		CSI.		DEFL. in (loc) l/defl L/d					PLATES	GRIP
TCLL	20.0	Plate Grip DOL	1.15	TC	0.26	Vert(LL)	-0.06	14	>999	360	MT20	244/190
TCDL	10.0	Lumber DOL	1.15	BC	0.39	Vert(CT)	-0.11	14	>999	240		
BCLL	0.0 *	Rep Stress Incr	YES	WB	0.12	Horz(CT)	0.01	8	n/a	n/a		
BCDL	10.0	Code IRC2015/TPI2014		Matrix-S		Wind(LL)	0.10	10	>999	240	Weight: 77 lb	FT = 20%

LUMBER-
TOP CHORD 2x4 SP No.1
BOT CHORD 2x6 SP No.1
WEBS 2x4 SP No.2
OTHERS 2x4 SP No.2

BRACING-
TOP CHORD Structural wood sheathing directly applied or 5-7-2 oc purlins.
BOT CHORD Rigid ceiling directly applied or 6-11-9 oc bracing.

REACTIONS. (size) 2=0-3-0, 8=0-3-0
Max Horz 2=-60(LC 17)
Max Uplift 2=-374(LC 8), 8=-374(LC 9)
Max Grav 2=689(LC 1), 8=689(LC 1)

FORCES. (lb) - Max. Comp./Max. Ten. - All forces 250 (lb) or less except when shown.
TOP CHORD 2-3=-1152/1233, 3-4=-1102/1258, 4-5=-1093/1287, 5-6=-1093/1287, 6-7=-1102/1258, 7-8=-1152/1233
BOT CHORD 2-14=-1093/1033, 13-14=-1093/1033, 12-13=-1093/1033, 11-12=-1093/1033, 10-11=-1093/1033, 8-10=-1093/1033
WEBS 5-12=-650/495

NOTES-
1) Unbalanced roof live loads have been considered for this design.
2) Wind: ASCE 7-10; Vult=130mph Vasd=103mph; TCDL=6.0psf; BCDL=6.0psf; h=15ft; Cat. II; Exp C; Enclosed; MWFRS (envelope) gable end zone and C-C Exterior(2) zone; porch left and right exposed;C-C for members and forces & MWFRS for reactions shown; Lumber DOL=1.60 plate grip DOL=1.60
3) Truss designed for wind loads in the plane of the truss only. For studs exposed to wind (normal to the face), see Standard Industry Gable End Details as applicable, or consult qualified building designer as per ANSI/TPI 1.
4) All plates are 2x4 MT20 unless otherwise indicated.
5) Gable studs spaced at 2-0-0 oc.
6) This truss has been designed for a 10.0 psf bottom chord live load nonconcurrent with any other live loads.
7) * This truss has been designed for a live load of 30.0psf on the bottom chord in all areas where a rectangle 3-6-0 tall by 2-0-0 wide will fit between the bottom chord and any other members.
8) Provide mechanical connection (by others) of truss to bearing plate capable of withstanding 100 lb uplift at joint(s) except (jt=lb) 2=374, 8=374.

NORTH CAROLINA PROFESSIONAL SEAL 036322 ENGINEER ERIC A. GILBERT

July 12,2023

ENGINEERING BY TRENCO A MiTek Affiliate
818 Soundside Road
Edenton, NC 27932

Job	Truss	Truss Type	Qty	Ply	Lot 108 South Creek
J0623-3411	G1-GR	Flat Girder	1	2	I59478550 Job Reference (optional)

Comtech, Inc, Fayetteville, NC - 28314, 8.430 s Jan 6 2022 MiTek Industries, Inc. Wed Jul 12 07:49:31 2023 Page 1
ID:C5NWnh8QZZzTasfLD?bt5jz_UVZ-RfC?PsB70Hq3NSgPqnL8w3uITXbGKWrCDoi7J4zJC?f

5-10-7 | 11-3-9 | 17-2-0
5-10-7 | 5-5-2 | 5-10-7

Scale = 1:28.4

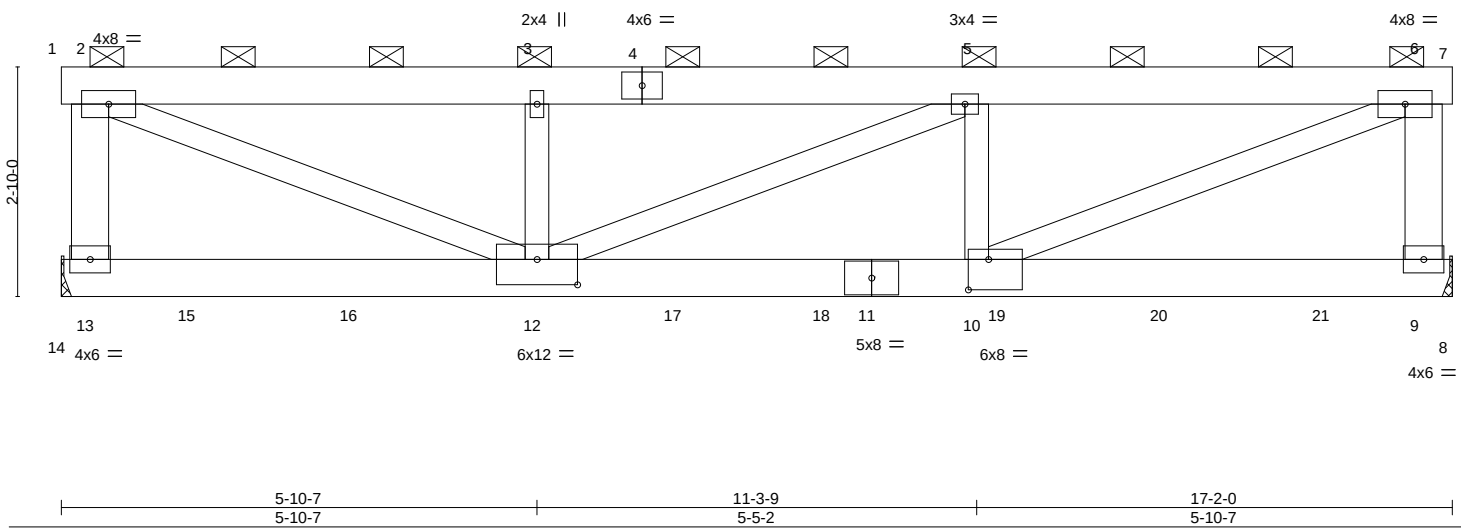

5-10-7 | 11-3-9 | 17-2-0
5-10-7 | 5-5-2 | 5-10-7

Plate Offsets (X,Y)-- [10:0-3-0,0-4-8], [12:0-6-0,0-3-12]

LOADING (psf)		SPACING- 2-0-0		CSI.		DEFL.	in	(loc)	l/defl	L/d	PLATES	GRIP
TCLL	20.0	Plate Grip DOL	1.15	TC	0.28	Vert(LL)	-0.09	10-12	>999	360	MT20	244/190
TCDL	10.0	Lumber DOL	1.15	BC	0.69	Vert(CT)	-0.18	10-12	>999	240		
BCLL	0.0 *	Rep Stress Incr	NO	WB	0.66	Horz(CT)	0.02	9	n/a	n/a		
BCDL	10.0	Code IRC2015/TPI2014		Matrix-S		Wind(LL)	0.08	10-12	>999	240	Weight: 239 lb	FT = 20%

LUMBER-
TOP CHORD 2x6 SP No.1
BOT CHORD 2x6 SP No.1
WEBS 2x4 SP No.2 *Except*
2-13,6-9: 2x6 SP No.1

BRACING-
TOP CHORD 2-0-0 oc purlins (6-0-0 max.): 1-7, except end verticals.
BOT CHORD Rigid ceiling directly applied or 10-0-0 oc bracing.

REACTIONS. (size) 13=Mechanical, 9=Mechanical
Max Uplift 13=-317(LC 4), 9=-334(LC 5)
Max Grav 13=3116(LC 1), 9=3164(LC 1)

FORCES. (lb) - Max. Comp./Max. Ten. - All forces 250 (lb) or less except when shown.
TOP CHORD 2-13=-2361/307, 2-3=-5284/576, 3-5=-5284/576, 5-6=-5350/618, 6-9=-2387/327
BOT CHORD 12-13=-35/430, 10-12=-618/5350, 9-10=-35/439
WEBS 2-12=-589/5286, 6-10=-635/5346

NOTES-
1) 2-ply truss to be connected together with 10d (0.131"x3") nails as follows:
Top chords connected as follows: 2x6 - 2 rows staggered at 0-9-0 oc.
Bottom chords connected as follows: 2x6 - 2 rows staggered at 0-9-0 oc.
Webs connected as follows: 2x4 - 1 row at 0-9-0 oc.
2) All loads are considered equally applied to all plies, except if noted as front (F) or back (B) face in the LOAD CASE(S) section. Ply to ply connections have been provided to distribute only loads noted as (F) or (B), unless otherwise indicated.
3) Wind: ASCE 7-10; Vult=130mph Vasd=103mph; TCDL=6.0psf; BCDL=6.0psf; h=15ft; Cat. II; Exp C; Enclosed; MWFRS (envelope); Lumber DOL=1.60 plate grip DOL=1.60
4) Provide adequate drainage to prevent water ponding.
5) This truss has been designed for a 10.0 psf bottom chord live load nonconcurrent with any other live loads.
6) * This truss has been designed for a live load of 30.0psf on the bottom chord in all areas where a rectangle 3-6-0 tall by 2-0-0 wide will fit between the bottom chord and any other members.
7) Refer to girder(s) for truss to truss connections.
8) Provide mechanical connection (by others) of truss to bearing plate capable of withstanding 100 lb uplift at joint(s) except (jt=lb) 13=317, 9=334.
9) Graphical purlin representation does not depict the size or the orientation of the purlin along the top and/or bottom chord.
10) Hanger(s) or other connection device(s) shall be provided sufficient to support concentrated load(s) 590 lb down and 50 lb up at 1-7-4, 590 lb down and 50 lb up at 3-7-4, 590 lb down and 50 lb up at 5-7-4, 590 lb down and 50 lb up at 7-7-4, 289 lb down and 167 lb up at 9-5-4, 590 lb down and 50 lb up at 9-7-4, 590 lb down and 50 lb up at 11-7-4, and 590 lb down and 50 lb up at 13-7-4, and 590 lb down and 50 lb up at 15-7-4 on bottom chord. The design/selection of such connection device(s) is the responsibility of others.

LOAD CASE(S) Standard

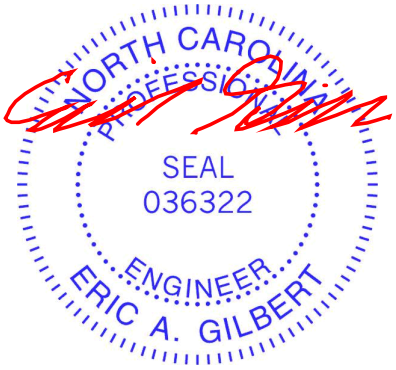

July 12,2023

Continued on page 2

ENGINEERING BY TRENCO A MiTek Affiliate
818 Soundside Road
Edenton, NC 27932

LOAD CASE(S) Standard

1) Dead + Roof Live (balanced): Lumber Increase=1.15, Plate Increase=1.15
   Uniform Loads (plf)
   Vert: 1-2=-60, 2-6=-60, 6-7=-60, 8-14=-20
   Concentrated Loads (lb)
   Vert: 12=-577(B) 15=-577(B) 16=-577(B) 17=-577(B) 18=-866(F=-289, B=-577) 19=-577(B) 20=-577(B) 21=-577(B)

Job	Truss	Truss Type	Qty	Ply	Lot 108 South Creek
J0623-3411	H1	COMMON	2	1	I59478551 Job Reference (optional)

Comtech, Inc, Fayetteville, NC - 28314, 8.430 s Jan 6 2022 MiTek Industries, Inc. Wed Jul 12 07:49:32 2023 Page 1
ID:C5NWnh8QZZzTasfLD?bt5jz_UVZ-RfC?PsB70Hq3NSgPqnL8w3uITXbGKWrCDoi7J4zJC?f

-0-11-0	2-11-8	5-11-0	6-10-0
0-11-0	2-11-8	2-11-8	0-11-0

Scale = 1:21.5

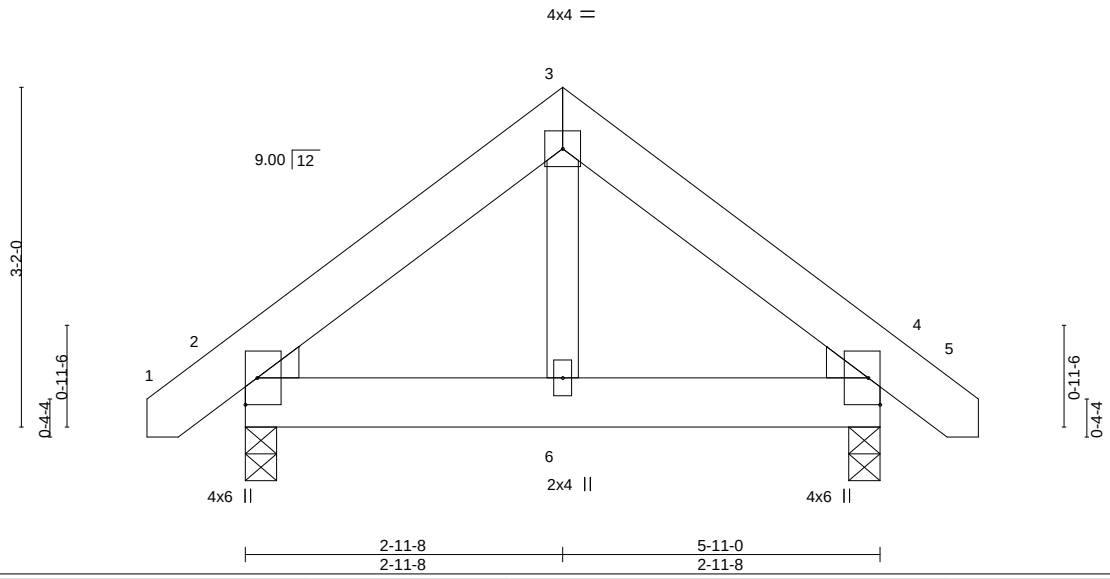

LOADING (psf)			SPACING- 2-0-0		CSI.		DEFL. in (loc) l/defl L/d					PLATES	GRIP
TCLL	20.0		Plate Grip DOL	1.15	TC	0.05	Vert(LL)	-0.00	2	>999	360	MT20	244/190
TCDL	10.0		Lumber DOL	1.15	BC	0.06	Vert(CT)	-0.00	6	>999	240		
BCLL	0.0	*	Rep Stress Incr	YES	WB	0.03	Horz(CT)	0.00	4	n/a	n/a		
BCDL	10.0		Code IRC2015/TPI2014		Matrix-P		Wind(LL)	0.00	2	>999	240	Weight: 42 lb	FT = 20%

LUMBER-
TOP CHORD 2x6 SP No.1
BOT CHORD 2x6 SP No.1
WEBS 2x4 SP No.2
WEDGE
Left: 2x4 SP No.2 , Right: 2x4 SP No.2

BRACING-
TOP CHORD Structural wood sheathing directly applied or 5-11-0 oc purlins.
BOT CHORD Rigid ceiling directly applied or 10-0-0 oc bracing.

REACTIONS. (size) 2=0-3-8, 4=0-3-8
Max Horz 2=67(LC 11)
Max Uplift 2=-22(LC 12), 4=-22(LC 13)
Max Grav 2=280(LC 1), 4=280(LC 1)

FORCES. (lb) - Max. Comp./Max. Ten. - All forces 250 (lb) or less except when shown.

NOTES-
1) Unbalanced roof live loads have been considered for this design.
2) Wind: ASCE 7-10; Vult=130mph Vasd=103mph; TCDL=6.0psf; BCDL=6.0psf; h=15ft; Cat. II; Exp C; Enclosed; MWFRS (envelope) and C-C Exterior(2) zone;C-C for members and forces & MWFRS for reactions shown; Lumber DOL=1.60 plate grip DOL=1.60
3) This truss has been designed for a 10.0 psf bottom chord live load nonconcurrent with any other live loads.
4) * This truss has been designed for a live load of 30.0psf on the bottom chord in all areas where a rectangle 3-6-0 tall by 2-0-0 wide will fit between the bottom chord and any other members.
5) Provide mechanical connection (by others) of truss to bearing plate capable of withstanding 100 lb uplift at joint(s) 2, 4.
6) See Standard Industry Piggyback Truss Connection Detail for Connection to base truss as applicable, or consult qualified building designer.

July 12,2023

ENGINEERING BY TRENCO A MiTek Affiliate
818 Soundside Road
Edenton, NC 27932

Job	Truss	Truss Type	Qty	Ply	Lot 108 South Creek
J0623-3411	H1GE	GABLE	1	1	I59478552 Job Reference (optional)

Comtech, Inc, Fayetteville, NC - 28314, 8.430 s Jan 6 2022 MiTek Industries, Inc. Wed Jul 12 07:49:33 2023 Page 1
ID:C5NWnh8QZZzTasfLD?bt5jz_UVZ-RfC?PsB70Hq3NSgPqnL8w3uITXbGKWrCDoi7J4zJC?f

-0-11-0	2-11-8	5-11-0	6-10-0
0-11-0	2-11-8	2-11-8	0-11-0

Scale = 1:22.6

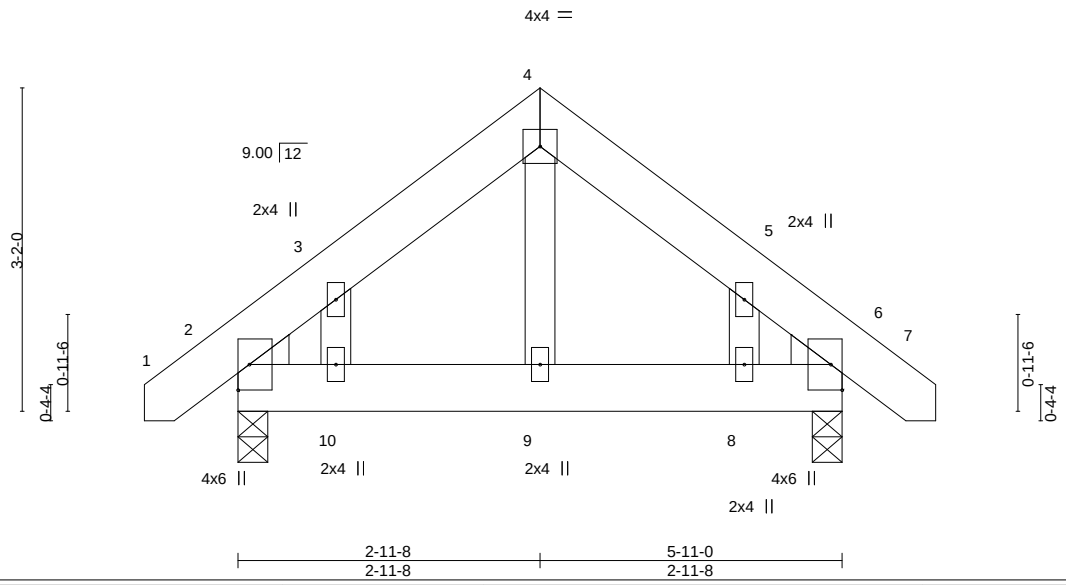

LOADING (psf)			SPACING- 2-0-0		CSI.		DEFL.	in	(loc)	l/defl	L/d	PLATES	GRIP
TCLL	20.0		Plate Grip DOL	1.15	TC	0.03	Vert(LL)	0.00	10	>999	240	MT20	244/190
TCDL	10.0		Lumber DOL	1.15	BC	0.03	Vert(CT)	-0.00	10	>999	240		
BCLL	0.0	*	Rep Stress Incr	YES	WB	0.02	Horz(CT)	0.00	6	n/a	n/a		
BCDL	10.0		Code IRC2015/TPI2014		Matrix-S							Weight: 44 lb	FT = 20%

LUMBER-
TOP CHORD 2x6 SP No.1
BOT CHORD 2x6 SP No.1
WEBS 2x4 SP No.2
OTHERS 2x4 SP No.2
WEDGE
Left: 2x4 SP No.2 , Right: 2x4 SP No.2

BRACING-
TOP CHORD Structural wood sheathing directly applied or 5-11-0 oc purlins.
BOT CHORD Rigid ceiling directly applied or 10-0-0 oc bracing.

REACTIONS. (size) 2=0-3-8, 6=0-3-8
Max Horz 2=84(LC 11)
Max Uplift 2=-65(LC 12), 6=-65(LC 13)
Max Grav 2=280(LC 1), 6=280(LC 1)

FORCES. (lb) - Max. Comp./Max. Ten. - All forces 250 (lb) or less except when shown.

NOTES-
1) Unbalanced roof live loads have been considered for this design.
2) Wind: ASCE 7-10; Vult=130mph Vasd=103mph; TCDL=6.0psf; BCDL=6.0psf; h=15ft; Cat. II; Exp C; Enclosed; MWFRS (envelope) gable end zone and C-C Exterior(2) zone;C-C for members and forces & MWFRS for reactions shown; Lumber DOL=1.60 plate grip DOL=1.60
3) Truss designed for wind loads in the plane of the truss only. For studs exposed to wind (normal to the face), see Standard Industry Gable End Details as applicable, or consult qualified building designer as per ANSI/TPI 1.
4) Gable studs spaced at 2-0-0 oc.
5) This truss has been designed for a 10.0 psf bottom chord live load nonconcurrent with any other live loads.
6) * This truss has been designed for a live load of 30.0psf on the bottom chord in all areas where a rectangle 3-6-0 tall by 2-0-0 wide will fit between the bottom chord and any other members.
7) Provide mechanical connection (by others) of truss to bearing plate capable of withstanding 100 lb uplift at joint(s) 2, 6.
8) See Standard Industry Piggyback Truss Connection Detail for Connection to base truss as applicable, or consult qualified building designer.

NORTH CAROLINA PROFESSIONAL SEAL 036322 ENGINEER ERIC A. GILBERT

July 12,2023

ENGINEERING BY TRENCO A MiTek Affiliate
818 Soundside Road
Edenton, NC 27932

Job	Truss	Truss Type	Qty	Ply	Lot 108 South Creek
J0623-3411	J1	ROOF SPECIAL	1	1	I59478553 Job Reference (optional)

Comtech, Inc, Fayetteville, NC - 28314, 8.430 s Jan 6 2022 MiTek Industries, Inc. Wed Jul 12 07:49:34 2023 Page 1
ID:C5NWnh8QZZzTasfLD?bt5jz_UVZ-RfC?PsB70Hq3NSgPqnL8w3uITXbGKWrCDoi7J4zJC?f

-0-11-0 6-1-15 12-0-0 18-7-8
0-11-0 6-1-15 5-10-1 6-7-8

Scale = 1:65.7

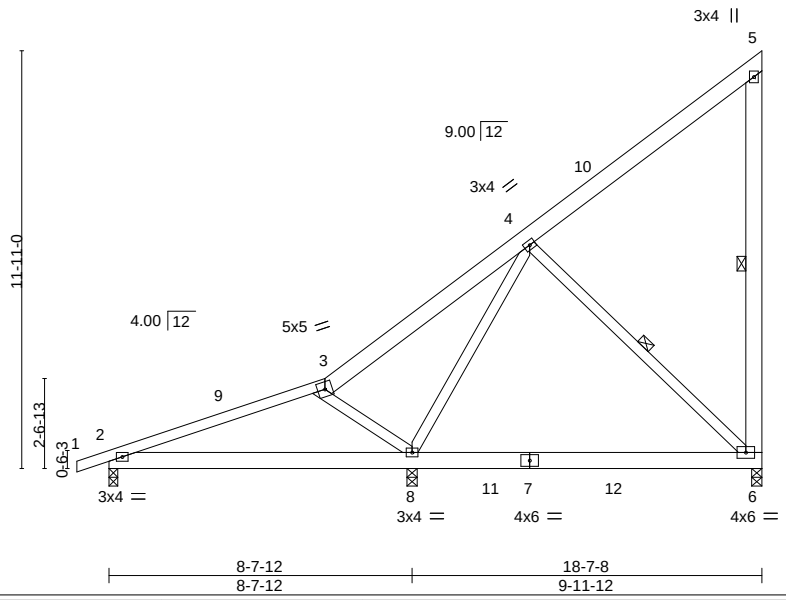

LOADING (psf)			SPACING- 2-0-0		CSI.		DEFL.	in	(loc)	l/defl	L/d	PLATES	GRIP
TCLL	20.0		Plate Grip DOL	1.15	TC	0.31	Vert(LL)	-0.11	6-8	>999	360	MT20	244/190
TCDL	10.0		Lumber DOL	1.15	BC	0.33	Vert(CT)	-0.16	6-8	>743	240		
BCLL	0.0	*	Rep Stress Incr	YES	WB	0.36	Horz(CT)	0.00	6	n/a	n/a		
BCDL	10.0		Code IRC2015/TPI2014		Matrix-S		Wind(LL)	0.10	2-8	>984	240	Weight: 145 lb	FT = 20%

LUMBER-
TOP CHORD 2x4 SP No.1 *Except*
3-5: 2x6 SP No.1
BOT CHORD 2x6 SP No.1
WEBS 2x4 SP No.2 *Except*
5-6: 2x6 SP No.1

BRACING-
TOP CHORD Structural wood sheathing directly applied or 6-0-0 oc purlins, except end verticals.
BOT CHORD Rigid ceiling directly applied or 10-0-0 oc bracing.
WEBS 1 Row at midpt 5-6, 4-6

REACTIONS. (size) 6=0-3-8, 8=0-3-8, 2=0-3-0
Max Horz 2=370(LC 12)
Max Uplift 6=-192(LC 12), 8=-45(LC 9), 2=-139(LC 8)
Max Grav 6=474(LC 19), 8=840(LC 2), 2=360(LC 1)

FORCES. (lb) - Max. Comp./Max. Ten. - All forces 250 (lb) or less except when shown.
TOP CHORD 2-3=-268/93
BOT CHORD 2-8=-230/284
WEBS 3-8=-331/153, 4-8=-406/89, 4-6=-322/240

NOTES-
1) Wind: ASCE 7-10; Vult=130mph Vasd=103mph; TCDL=6.0psf; BCDL=6.0psf; h=15ft; Cat. II; Exp C; Enclosed; MWFRS (envelope) and C-C Exterior(2) -0-11-0 to 3-5-13, Interior(1) 3-5-13 to 18-4-12 zone; porch left exposed;C-C for members and forces & MWFRS for reactions shown; Lumber DOL=1.60 plate grip DOL=1.60
2) This truss has been designed for a 10.0 psf bottom chord live load nonconcurrent with any other live loads.
3) * This truss has been designed for a live load of 30.0psf on the bottom chord in all areas where a rectangle 3-6-0 tall by 2-0-0 wide will fit between the bottom chord and any other members, with BCDL = 10.0psf.
4) Provide mechanical connection (by others) of truss to bearing plate capable of withstanding 100 lb uplift at joint(s) 8 except (jt=lb) 6=192, 2=139.

NORTH CAROLINA PROFESSIONAL SEAL 036322 ENGINEER ERIC A. GILBERT

July 12,2023

ENGINEERING BY TRENCO A MiTek Affiliate
818 Soundside Road
Edenton, NC 27932

Job	Truss	Truss Type	Qty	Ply	Lot 108 South Creek
J0623-3411	J2	ROOF SPECIAL	2	1	I59478554 Job Reference (optional)

Comtech, Inc, Fayetteville, NC - 28314, 8.430 s Jan 6 2022 MiTek Industries, Inc. Wed Jul 12 07:49:35 2023 Page 1
ID:C5NWnh8QZZzTasfLD?bt5jz_UVZ-RfC?PsB70Hq3NSgPqnL8w3uITXbGKWrCDoi7J4zJC?f

-0-11-0 6-1-15 12-0-0 18-2-0 18-7-8
0-11-0 6-1-15 5-10-1 6-2-0 0-5-8

Scale = 1:66.2

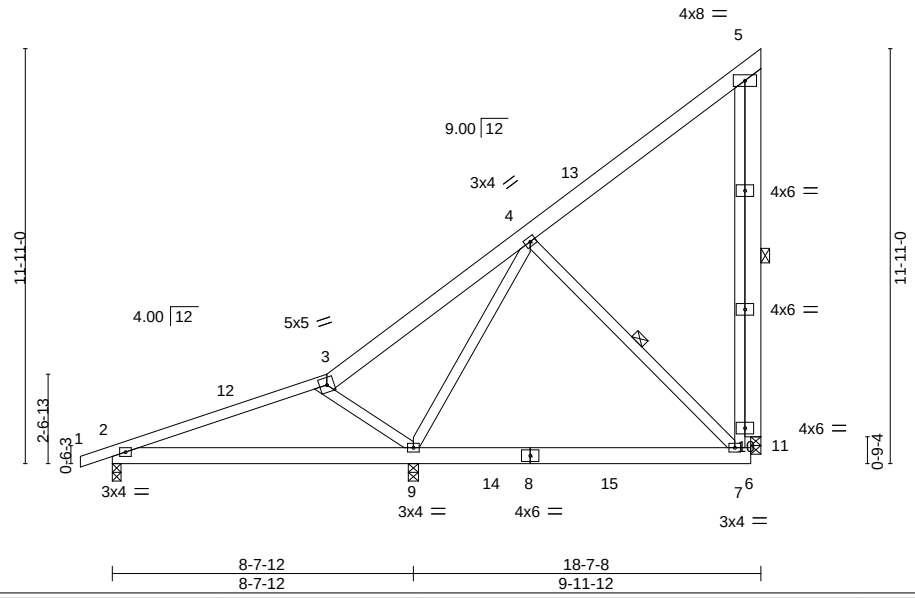

LOADING (psf)			SPACING- 2-0-0		CSI.		DEFL.	in	(loc)	l/defl	L/d	PLATES	GRIP
TCLL	20.0		Plate Grip DOL	1.15	TC	0.30	Vert(LL)	-0.11	7-9	>999	360	MT20	244/190
TCDL	10.0		Lumber DOL	1.15	BC	0.33	Vert(CT)	-0.16	7-9	>746	240		
BCLL	0.0	*	Rep Stress Incr	YES	WB	0.40	Horz(CT)	0.01	11	n/a	n/a		
BCDL	10.0		Code IRC2015/TPI2014		Matrix-S		Wind(LL)	0.10	2-9	>984	240	Weight: 159 lb	FT = 20%

LUMBER-
TOP CHORD 2x4 SP No.1 *Except*
3-5: 2x6 SP No.1
BOT CHORD 2x6 SP No.1
WEBS 2x4 SP No.2
OTHERS 2x6 SP No.1

BRACING-
TOP CHORD Structural wood sheathing directly applied or 6-0-0 oc purlins.
BOT CHORD Rigid ceiling directly applied or 10-0-0 oc bracing.
WEBS 1 Row at midpt 4-7, 5-11

REACTIONS. (size) 9=0-3-8, 2=0-3-0, 11=0-3-8
Max Horz 2=361(LC 12)
Max Uplift 9=-55(LC 9), 2=-148(LC 8), 11=-169(LC 12)
Max Grav 9=875(LC 2), 2=343(LC 1), 11=419(LC 19)

FORCES. (lb) - Max. Comp./Max. Ten. - All forces 250 (lb) or less except when shown.
TOP CHORD 3-4=-238/306
WEBS 7-10=-82/279, 5-10=-82/279, 3-9=-320/152, 4-9=-451/118, 4-7=-273/214, 5-11=-454/218

NOTES-
1) Wind: ASCE 7-10; Vult=130mph Vasd=103mph; TCDL=6.0psf; BCDL=6.0psf; h=15ft; Cat. II; Exp C; Enclosed; MWFRS (envelope) and C-C Exterior(2) -0-11-0 to 3-5-13, Interior(1) 3-5-13 to 18-0-4 zone; porch left exposed;C-C for members and forces & MWFRS for reactions shown; Lumber DOL=1.60 plate grip DOL=1.60
2) This truss has been designed for a 10.0 psf bottom chord live load nonconcurrent with any other live loads.
3) * This truss has been designed for a live load of 30.0psf on the bottom chord in all areas where a rectangle 3-6-0 tall by 2-0-0 wide will fit between the bottom chord and any other members, with BCDL = 10.0psf.
4) Bearing at joint(s) 11 considers parallel to grain value using ANSI/TPI 1 angle to grain formula. Building designer should verify capacity of bearing surface.
5) Provide mechanical connection (by others) of truss to bearing plate capable of withstanding 100 lb uplift at joint(s) 9 except (jt=lb) 2=148, 11=169.

July 12,2023

ENGINEERING BY TRENCO A MiTek Affiliate
818 Soundside Road
Edenton, NC 27932

Job	Truss	Truss Type	Qty	Ply	Lot 108 South Creek
J0623-3411	J2SG	GABLE	1	1	I59478555 Job Reference (optional)

Comtech, Inc, Fayetteville, NC - 28314, 8.430 s Jan 6 2022 MiTek Industries, Inc. Wed Jul 12 07:49:36 2023 Page 1
ID:C5NWnh8QZZzTasfLD?bt5jz_UVZ-RfC?PsB70Hq3NSgPqnL8w3uITXbGKWrCDoi7J4zJC?f

-0-11-0 6-1-15 12-0-0 18-2-0 18-7-8
0-11-0 6-1-15 5-10-1 6-2-0 0-5-8

Scale = 1:64.7

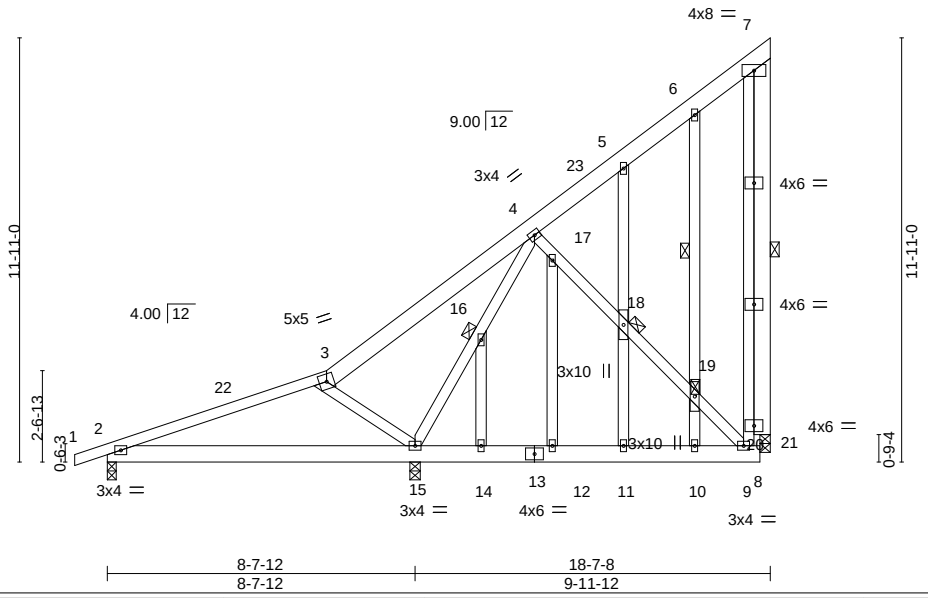

LOADING (psf)			SPACING-	2-0-0	CSI.		DEFL.	in	(loc)	l/defl	L/d	PLATES	GRIP
TCLL	20.0		Plate Grip DOL	1.15	TC	0.30	Vert(LL)	0.08	2-15	>999	240	MT20	244/190
TCDL	10.0		Lumber DOL	1.15	BC	0.20	Vert(CT)	-0.07	2-15	>999	240		
BCLL	0.0	*	Rep Stress Incr	YES	WB	0.14	Horz(CT)	0.01	21	n/a	n/a		
BCDL	10.0		Code IRC2015/TPI2014		Matrix-S							Weight: 197 lb	FT = 20%

LUMBER-
TOP CHORD 2x4 SP No.1 *Except*
3-7: 2x6 SP No.1
BOT CHORD 2x6 SP No.1
WEBS 2x4 SP No.2
OTHERS 2x4 SP No.2 *Except*
7-20: 2x6 SP No.1

BRACING-
TOP CHORD Structural wood sheathing directly applied or 6-0-0 oc purlins.
BOT CHORD Rigid ceiling directly applied or 10-0-0 oc bracing.
WEBS 1 Row at midpt 6-19, 7-21
JOINTS 1 Brace at Jt(s): 16, 18, 19

REACTIONS. (size) 15=0-3-8, 2=0-3-0, 21=0-3-8
Max Horz 2=361(LC 12)
Max Uplift 15=-80(LC 9), 2=-142(LC 8), 21=-158(LC 12)
Max Grav 15=865(LC 1), 2=334(LC 1), 21=370(LC 19)

FORCES. (lb) - Max. Comp./Max. Ten. - All forces 250 (lb) or less except when shown.
TOP CHORD 3-4=-263/350
WEBS 9-20=-113/298, 7-20=-113/298, 3-15=-312/147, 15-16=-504/76, 4-16=-515/74,
17-18=-289/145, 18-19=-257/137, 9-19=-282/144, 7-21=-444/193

NOTES-
1) Wind: ASCE 7-10; Vult=130mph Vasd=103mph; TCDL=6.0psf; BCDL=6.0psf; h=15ft; Cat. II; Exp C; Enclosed; MWFRS (envelope) and C-C Exterior(2) -0-11-0 to 3-5-13, Interior(1) 3-5-13 to 18-0-4 zone; porch left exposed;C-C for members and forces & MWFRS for reactions shown; Lumber DOL=1.60 plate grip DOL=1.60
2) Truss designed for wind loads in the plane of the truss only. For studs exposed to wind (normal to the face), see Standard Industry Gable End Details as applicable, or consult qualified building designer as per ANSI/TPI 1.
3) All plates are 2x4 MT20 unless otherwise indicated.
4) Gable studs spaced at 2-0-0 oc.
5) This truss has been designed for a 10.0 psf bottom chord live load nonconcurrent with any other live loads.
6) * This truss has been designed for a live load of 30.0psf on the bottom chord in all areas where a rectangle 3-6-0 tall by 2-0-0 wide will fit between the bottom chord and any other members.
7) Bearing at joint(s) 21 considers parallel to grain value using ANSI/TPI 1 angle to grain formula. Building designer should verify capacity of bearing surface.
8) Provide mechanical connection (by others) of truss to bearing plate capable of withstanding 100 lb uplift at joint(s) 15 except (jt=lb) 2=142, 21=158.

July 12,2023

ENGINEERING BY TRENCO A MiTek Affiliate
818 Soundside Road
Edenton, NC 27932

Job	Truss	Truss Type	Qty	Ply	Lot 108 South Creek
J0623-3411	J3	JACK-CLOSED	1	1	I59478556 Job Reference (optional)

Comtech, Inc, Fayetteville, NC - 28314, 8.430 s Jan 6 2022 MiTek Industries, Inc. Wed Jul 12 07:49:37 2023 Page 1
ID:C5NWnh8QZZzTasfLD?bt5jz_UVZ-RfC?PsB70Hq3NSgPqnL8w3uITXbGKWrCDoi7J4zJC?f

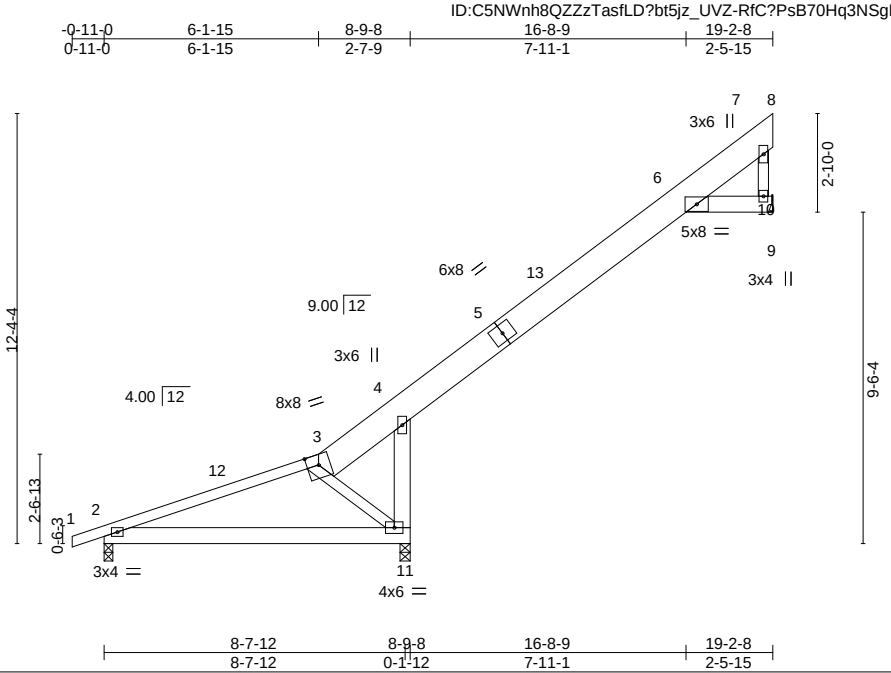

LOADING (psf)			SPACING- 2-0-0	CSI.		DEFL. in (loc) l/defl L/d					PLATES	GRIP
TCLL	20.0		Plate Grip DOL 1.15	TC	0.31	Vert(LL)	-0.05	2-11	>999	360	MT20	244/190
TCDL	10.0		Lumber DOL 1.15	BC	0.24	Vert(CT)	-0.10	2-11	>999	240		
BCLL	0.0	*	Rep Stress Incr YES	WB	0.03	Horz(CT)	0.04	10	n/a	n/a		
BCDL	10.0		Code IRC2015/TPI2014	Matrix-S		Wind(LL)	0.04	6	>999	240	Weight: 116 lb	FT = 20%

LUMBER-
TOP CHORD 2x10 SP No.1 *Except*
1-3: 2x4 SP No.1
BOT CHORD 2x6 SP No.1
WEBS 2x4 SP No.2

BRACING-
TOP CHORD Structural wood sheathing directly applied or 6-0-0 oc purlins, except end verticals.
BOT CHORD Rigid ceiling directly applied or 10-0-0 oc bracing, Except: 6-0-0 oc bracing: 4-11.

REACTIONS. (size) 10=Mechanical, 2=0-3-0, 11=0-3-8
Max Horz 2=382(LC 12)
Max Uplift 10=-147(LC 12), 2=-79(LC 8), 11=-256(LC 12)
Max Grav 10=340(LC 19), 2=325(LC 1), 11=792(LC 1)

FORCES. (lb) - Max. Comp./Max. Ten. - All forces 250 (lb) or less except when shown.
TOP CHORD 2-3=-629/560, 3-4=-552/545, 4-6=-253/167, 7-10=-318/211
BOT CHORD 4-11=-818/499

NOTES-
1) Wind: ASCE 7-10; Vult=130mph Vasd=103mph; TCDL=6.0psf; BCDL=6.0psf; h=15ft; Cat. II; Exp C; Enclosed; MWFRS (envelope) and C-C Exterior(2) -0-11-0 to 3-5-13, Interior(1) 3-5-13 to 19-2-8 zone;C-C for members and forces & MWFRS for reactions shown; Lumber DOL=1.60 plate grip DOL=1.60
2) This truss has been designed for a 10.0 psf bottom chord live load nonconcurrent with any other live loads.
3) * This truss has been designed for a live load of 30.0psf on the bottom chord in all areas where a rectangle 3-6-0 tall by 2-0-0 wide will fit between the bottom chord and any other members.
4) Refer to girder(s) for truss to truss connections.
5) Provide mechanical connection (by others) of truss to bearing plate capable of withstanding 100 lb uplift at joint(s) 2 except (jt=lb) 10=147, 11=256.

NORTH CAROLINA PROFESSIONAL SEAL 036322 ENGINEER ERIC A. GILBERT

July 12,2023

ENGINEERING BY TRENCO A MiTek Affiliate
818 Soundside Road
Edenton, NC 27932

Job	Truss	Truss Type	Qty	Ply	Lot 108 South Creek
J0623-3411	K1	COMMON	3	1	I59478557 Job Reference (optional)

Comtech, Inc, Fayetteville, NC - 28314, 8.430 s Jan 6 2022 MiTek Industries, Inc. Wed Jul 12 07:49:38 2023 Page 1
ID:C5NWnh8QZZzTasfLD?bt5jz_UVZ-RfC?PsB70Hq3NSgPqnL8w3uITXbGKWrCDoi7J4zJC?f

Scale = 1:28.4

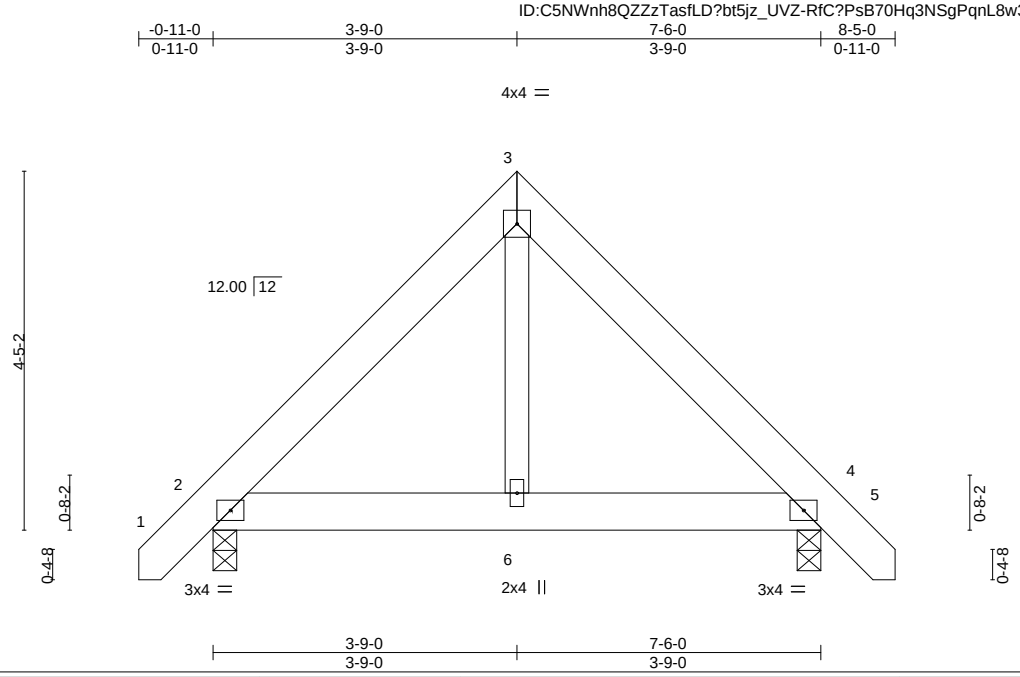

LOADING (psf)			SPACING- 2-0-0		CSI.		DEFL. in (loc) l/defl L/d					PLATES	GRIP
TCLL	20.0		Plate Grip DOL	1.15	TC	0.10	Vert(LL)	-0.00	6	>999	360	MT20	244/190
TCDL	10.0		Lumber DOL	1.15	BC	0.05	Vert(CT)	-0.00	2-6	>999	240		
BCLL	0.0	*	Rep Stress Incr	YES	WB	0.04	Horz(CT)	0.00	4	n/a	n/a		
BCDL	10.0		Code IRC2015/TPI2014		Matrix-P		Wind(LL)	-0.00	6	>999	240	Weight: 55 lb	FT = 20%

LUMBER-
TOP CHORD 2x6 SP No.1
BOT CHORD 2x6 SP No.1
WEBS 2x4 SP No.2

BRACING-
TOP CHORD Structural wood sheathing directly applied or 6-0-0 oc purlins.
BOT CHORD Rigid ceiling directly applied or 10-0-0 oc bracing.

REACTIONS. (size) 2=0-3-8, 4=0-3-8
Max Horz 2=-109(LC 10)
Max Uplift 2=-22(LC 12), 4=-22(LC 13)
Max Grav 2=344(LC 1), 4=344(LC 1)

FORCES. (lb) - Max. Comp./Max. Ten. - All forces 250 (lb) or less except when shown.
TOP CHORD 2-3=-280/65, 3-4=-280/65

NOTES-
1) Unbalanced roof live loads have been considered for this design.
2) Wind: ASCE 7-10; Vult=130mph Vasd=103mph; TCDL=6.0psf; BCDL=6.0psf; h=15ft; Cat. II; Exp C; Enclosed; MWFRS (envelope) and C-C Exterior(2) zone;C-C for members and forces & MWFRS for reactions shown; Lumber DOL=1.60 plate grip DOL=1.60
3) This truss has been designed for a 10.0 psf bottom chord live load nonconcurrent with any other live loads.
4) * This truss has been designed for a live load of 30.0psf on the bottom chord in all areas where a rectangle 3-6-0 tall by 2-0-0 wide will fit between the bottom chord and any other members.
5) Provide mechanical connection (by others) of truss to bearing plate capable of withstanding 100 lb uplift at joint(s) 2, 4.

NORTH CAROLINA PROFESSIONAL SEAL 036322 ENGINEER ERIC A. GILBERT

July 12,2023

ENGINEERING BY TRENCO A MiTek Affiliate
818 Soundside Road
Edenton, NC 27932

Job	Truss	Truss Type	Qty	Ply	Lot 108 South Creek
J0623-3411	K1GE	GABLE	1	1	I59478558 Job Reference (optional)

Comtech, Inc, Fayetteville, NC - 28314, 8.430 s Jan 6 2022 MiTek Industries, Inc. Wed Jul 12 07:49:39 2023 Page 1
ID:C5NWnh8QZZzTasfLD?bt5jz_UVZ-RfC?PsB70Hq3NSgPqnL8w3uITXbGKWrCDoi7J4zJC?f

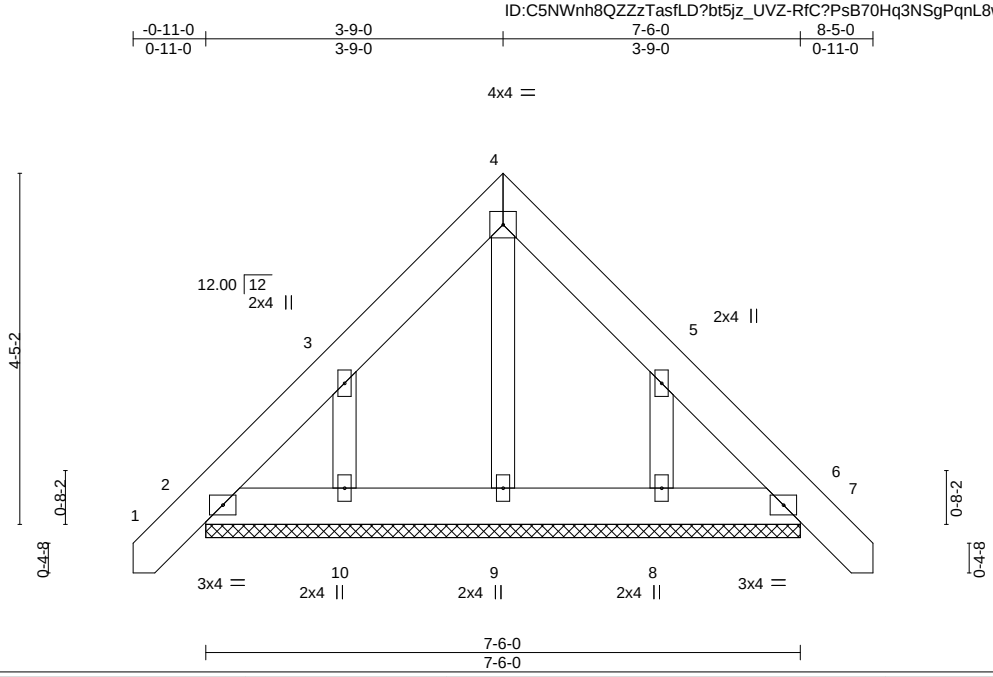

LOADING (psf)			SPACING- 2-0-0		CSI.		DEFL. in (loc) l/defl L/d					PLATES	GRIP
TCLL	20.0		Plate Grip DOL	1.15	TC	0.02	Vert(LL)	-0.00	6	n/r	120	MT20	244/190
TCDL	10.0		Lumber DOL	1.15	BC	0.01	Vert(CT)	-0.00	6	n/r	120		
BCLL	0.0	*	Rep Stress Incr	YES	WB	0.03	Horz(CT)	0.00	6	n/a	n/a		
BCDL	10.0		Code IRC2015/TPI2014		Matrix-P							Weight: 59 lb	FT = 20%

LUMBER-
TOP CHORD 2x6 SP No.1
BOT CHORD 2x6 SP No.1
OTHERS 2x4 SP No.2

BRACING-
TOP CHORD Structural wood sheathing directly applied or 6-0-0 oc purlins.
BOT CHORD Rigid ceiling directly applied or 10-0-0 oc bracing.

REACTIONS. All bearings 7-6-0.
(lb) - Max Horz 2=-136(LC 10)
Max Uplift All uplift 100 lb or less at joint(s) 2, 6 except 10=-151(LC 12), 8=-150(LC 13)
Max Grav All reactions 250 lb or less at joint(s) 2, 6, 9, 10, 8

FORCES. (lb) - Max. Comp./Max. Ten. - All forces 250 (lb) or less except when shown.

NOTES-
1) Unbalanced roof live loads have been considered for this design.
2) Wind: ASCE 7-10; Vult=130mph Vasd=103mph; TCDL=6.0psf; BCDL=6.0psf; h=15ft; Cat. II; Exp C; Enclosed; MWFRS (envelope) gable end zone and C-C Exterior(2) zone;C-C for members and forces & MWFRS for reactions shown; Lumber DOL=1.60 plate grip DOL=1.60
3) Truss designed for wind loads in the plane of the truss only. For studs exposed to wind (normal to the face), see Standard Industry Gable End Details as applicable, or consult qualified building designer as per ANSI/TPI 1.
4) Gable requires continuous bottom chord bearing.
5) Gable studs spaced at 2-0-0 oc.
6) This truss has been designed for a 10.0 psf bottom chord live load nonconcurrent with any other live loads.
7) * This truss has been designed for a live load of 30.0psf on the bottom chord in all areas where a rectangle 3-6-0 tall by 2-0-0 wide will fit between the bottom chord and any other members.
8) Provide mechanical connection (by others) of truss to bearing plate capable of withstanding 100 lb uplift at joint(s) 2, 6 except (jt=lb) 10=151, 8=150.

July 12,2023

ENGINEERING BY TRENCO A MiTek Affiliate
818 Soundside Road
Edenton, NC 27932

Job	Truss	Truss Type	Qty	Ply	Lot 108 South Creek
J0623-3411	PB	PIGGYBACK	14	1	I59478559 Job Reference (optional)

Comtech, Inc, Fayetteville, NC - 28314, 8.430 s Jan 6 2022 MiTek Industries, Inc. Wed Jul 12 07:49:39 2023 Page 1
ID:C5NWnh8QZZzTasfLD?bt5jz_UVZ-RfC?PsB70Hq3NSgPqnL8w3uITXbGKWrCDoi7J4zJC?f

Scale = 1:25.8

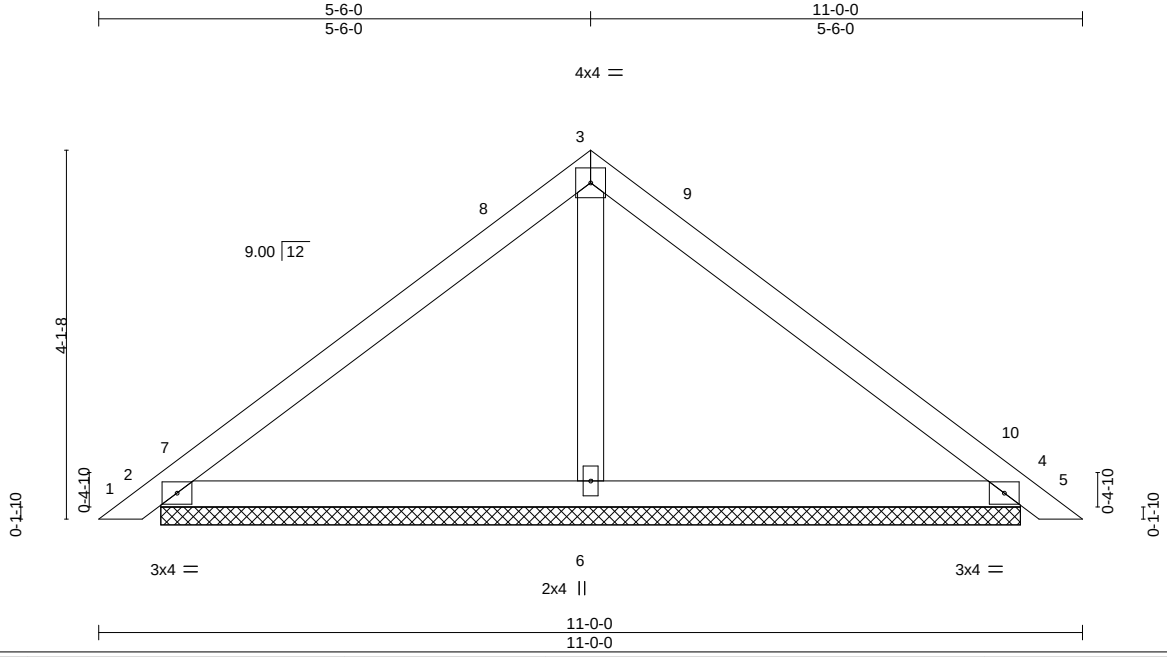

LOADING (psf)			SPACING-	2-0-0	CSI.		DEFL.	in	(loc)	l/defl	L/d	PLATES	GRIP
TCLL	20.0		Plate Grip DOL	1.15	TC	0.23	Vert(LL)	0.01	5	n/r	120	MT20	244/190
TCDL	10.0		Lumber DOL	1.15	BC	0.17	Vert(CT)	0.01	5	n/r	120		
BCLL	0.0	*	Rep Stress Incr	YES	WB	0.05	Horz(CT)	0.00	4	n/a	n/a		
BCDL	10.0		Code IRC2015/TPI2014		Matrix-S							Weight: 40 lb	FT = 20%

LUMBER-
TOP CHORD 2x4 SP No.1
BOT CHORD 2x4 SP No.1
OTHERS 2x4 SP No.2

BRACING-
TOP CHORD Structural wood sheathing directly applied or 6-0-0 oc purlins.
BOT CHORD Rigid ceiling directly applied or 10-0-0 oc bracing.

REACTIONS. (size) 2=9-7-5, 4=9-7-5, 6=9-7-5
Max Horz 2=-95(LC 10)
Max Uplift 2=-29(LC 12), 4=-38(LC 13)
Max Grav 2=226(LC 1), 4=226(LC 1), 6=372(LC 1)

FORCES. (lb) - Max. Comp./Max. Ten. - All forces 250 (lb) or less except when shown.

NOTES-
1) Unbalanced roof live loads have been considered for this design.
2) Wind: ASCE 7-10; Vult=130mph Vasd=103mph; TCDL=6.0psf; BCDL=6.0psf; h=15ft; Cat. II; Exp C; Enclosed; MWFRS (envelope) and C-C Exterior(2) 0-2-15 to 4-7-11, Interior(1) 4-7-11 to 5-6-0, Exterior(2) 5-6-0 to 9-10-13, Interior(1) 9-10-13 to 10-9-1 zone;C-C for members and forces & MWFRS for reactions shown; Lumber DOL=1.60 plate grip DOL=1.60
3) Gable requires continuous bottom chord bearing.
4) This truss has been designed for a 10.0 psf bottom chord live load nonconcurrent with any other live loads.
5) * This truss has been designed for a live load of 30.0psf on the bottom chord in all areas where a rectangle 3-6-0 tall by 2-0-0 wide will fit between the bottom chord and any other members.
6) Provide mechanical connection (by others) of truss to bearing plate capable of withstanding 100 lb uplift at joint(s) 2, 4.
7) See Standard Industry Piggyback Truss Connection Detail for Connection to base truss as applicable, or consult qualified building designer.

July 12,2023

ENGINEERING BY TRENCO A MiTek Affiliate
818 Soundside Road
Edenton, NC 27932

Job	Truss	Truss Type	Qty	Ply	Lot 108 South Creek
J0623-3411	PB2	Piggyback	13	1	I59478560 Job Reference (optional)

Comtech, Inc, Fayetteville, NC - 28314, 8.430 s Jan 6 2022 MiTek Industries, Inc. Wed Jul 12 07:49:40 2023 Page 1
ID:C5NWnh8QZZzTasfLD?bt5jz_UVZ-RfC?PsB70Hq3NSgPqnL8w3uITXbGKWrCDoi7J4zJC?f

Scale: 1"=1'

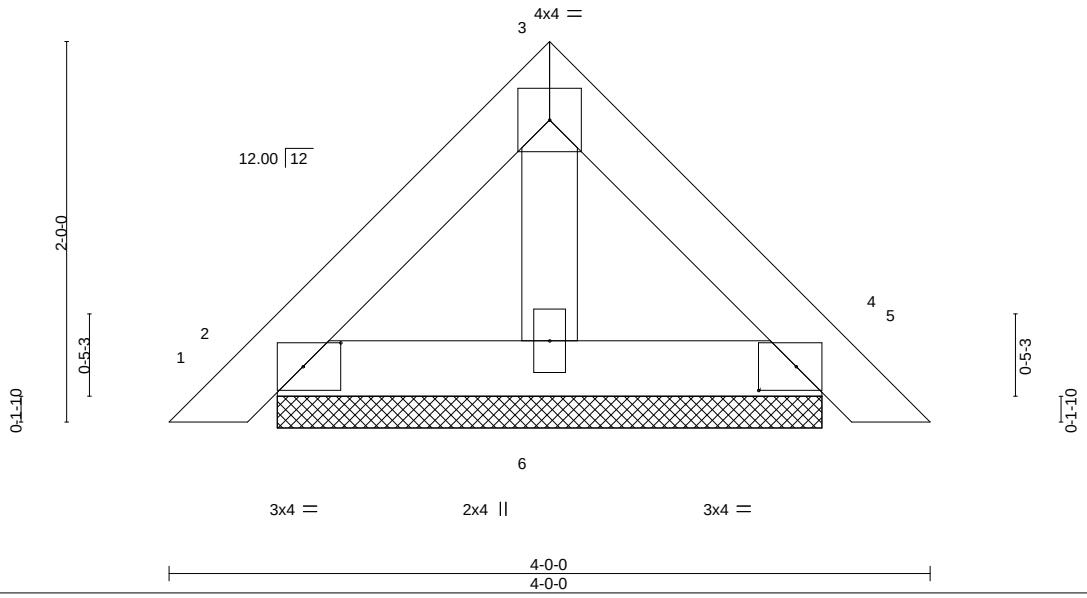

Plate Offsets (X,Y)-- [2:0-2-6,0-1-8], [4:0-2-6,0-1-8]

LOADING (psf)		SPACING- 2-0-0		CSI.		DEFL. in (loc) l/defl L/d					PLATES	GRIP
TCLL	20.0	Plate Grip DOL	1.15	TC	0.03	Vert(LL)	0.00	4	n/r	120	MT20	244/190
TCDL	10.0	Lumber DOL	1.15	BC	0.02	Vert(CT)	0.00	4	n/r	120		
BCLL	0.0 *	Rep Stress Incr	YES	WB	0.01	Horz(CT)	0.00	4	n/a	n/a		
BCDL	10.0	Code IRC2015/TPI2014		Matrix-P							Weight: 14 lb	FT = 20%

LUMBER-
TOP CHORD 2x4 SP No.1
BOT CHORD 2x4 SP No.1
OTHERS 2x4 SP No.2

BRACING-
TOP CHORD Structural wood sheathing directly applied or 4-0-0 oc purlins.
BOT CHORD Rigid ceiling directly applied or 10-0-0 oc bracing.

REACTIONS. (size) 2=2-10-6, 4=2-10-6, 6=2-10-6
Max Horz 2=-54(LC 10)
Max Uplift 2=-32(LC 12), 4=-37(LC 13)
Max Grav 2=94(LC 1), 4=94(LC 1), 6=88(LC 3)

FORCES. (lb) - Max. Comp./Max. Ten. - All forces 250 (lb) or less except when shown.

NOTES-
1) Unbalanced roof live loads have been considered for this design.
2) Wind: ASCE 7-10; Vult=130mph Vasd=103mph; TCDL=6.0psf; BCDL=6.0psf; h=15ft; Cat. II; Exp C; Enclosed; MWFRS (envelope) gable end zone and C-C Exterior(2) zone;C-C for members and forces & MWFRS for reactions shown; Lumber DOL=1.60 plate grip DOL=1.60
3) Gable requires continuous bottom chord bearing.
4) This truss has been designed for a 10.0 psf bottom chord live load nonconcurrent with any other live loads.
5) * This truss has been designed for a live load of 30.0psf on the bottom chord in all areas where a rectangle 3-6-0 tall by 2-0-0 wide will fit between the bottom chord and any other members.
6) Provide mechanical connection (by others) of truss to bearing plate capable of withstanding 100 lb uplift at joint(s) 2, 4.
7) See Standard Industry Piggyback Truss Connection Detail for Connection to base truss as applicable, or consult qualified building designer.

July 12,2023

ENGINEERING BY TRENCO A MiTek Affiliate
818 Soundside Road
Edenton, NC 27932

Job	Truss	Truss Type	Qty	Ply	Lot 108 South Creek
J0623-3411	PBGE	GABLE	2	1	I59478561 Job Reference (optional)

Comtech, Inc, Fayetteville, NC - 28314, 8.430 s Jan 6 2022 MiTek Industries, Inc. Wed Jul 12 07:49:41 2023 Page 1
ID:C5NWnh8QZZzTasfLD?bt5jz_UVZ-RfC?PsB70Hq3NSgPqnL8w3uITXbGKWrCDoi7J4zJC?f

5-6-0 | 11-0-0
5-6-0 | 5-6-0

Scale = 1:24.7

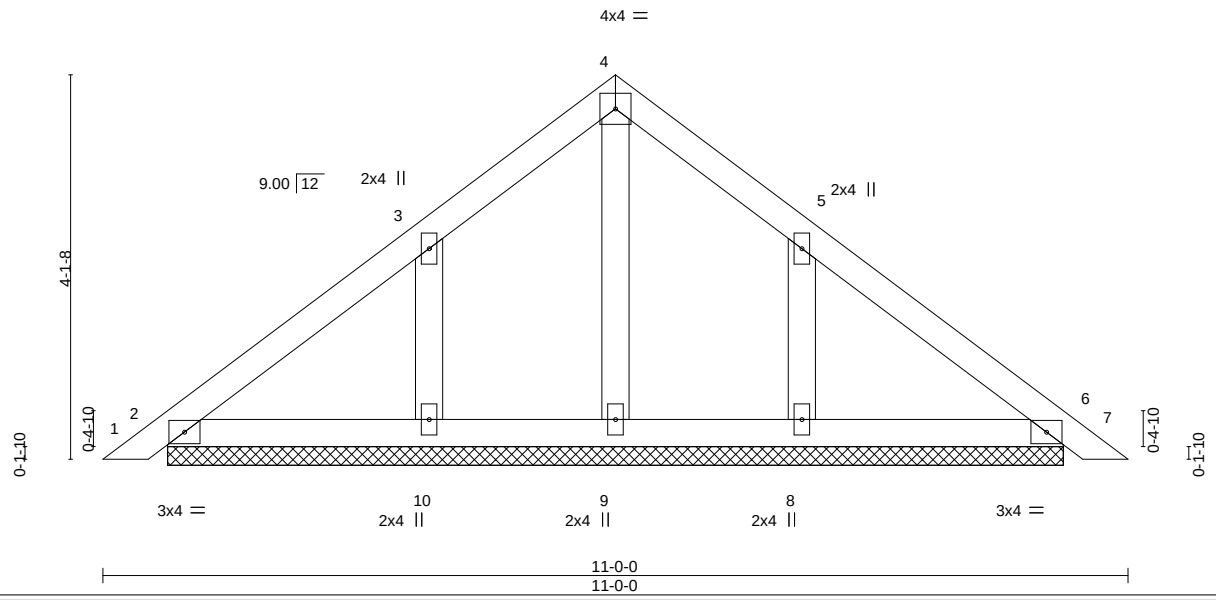

LOADING (psf)			SPACING- 2-0-0		CSI.		DEFL.	in	(loc)	l/defl	L/d	PLATES	GRIP
TCLL	20.0		Plate Grip DOL	1.15	TC	0.06	Vert(LL)	0.00	6	n/r	120	MT20	244/190
TCDL	10.0		Lumber DOL	1.15	BC	0.04	Vert(CT)	0.00	7	n/r	120		
BCLL	0.0	*	Rep Stress Incr	YES	WB	0.03	Horz(CT)	0.00	6	n/a	n/a		
BCDL	10.0		Code IRC2015/TPI2014		Matrix-S							Weight: 45 lb	FT = 20%

LUMBER-
TOP CHORD 2x4 SP No.1
BOT CHORD 2x4 SP No.1
OTHERS 2x4 SP No.2

BRACING-
TOP CHORD Structural wood sheathing directly applied or 6-0-0 oc purlins.
BOT CHORD Rigid ceiling directly applied or 10-0-0 oc bracing.

REACTIONS. All bearings 9-7-5.
(lb) - Max Horz 2=-118(LC 10)
Max Uplift All uplift 100 lb or less at joint(s) 2, 6 except 10=-148(LC 12), 8=-147(LC 13)
Max Grav All reactions 250 lb or less at joint(s) 2, 6, 9 except 10=268(LC 19), 8=267(LC 20)

FORCES. (lb) - Max. Comp./Max. Ten. - All forces 250 (lb) or less except when shown.

NOTES-
1) Unbalanced roof live loads have been considered for this design.
2) Wind: ASCE 7-10; Vult=130mph Vasd=103mph; TCDL=6.0psf; BCDL=6.0psf; h=15ft; Cat. II; Exp C; Enclosed; MWFRS (envelope) gable end zone and C-C Exterior(2) zone;C-C for members and forces & MWFRS for reactions shown; Lumber DOL=1.60 plate grip DOL=1.60
3) Truss designed for wind loads in the plane of the truss only. For studs exposed to wind (normal to the face), see Standard Industry Gable End Details as applicable, or consult qualified building designer as per ANSI/TPI 1.
4) Gable requires continuous bottom chord bearing.
5) Gable studs spaced at 2-0-0 oc.
6) This truss has been designed for a 10.0 psf bottom chord live load nonconcurrent with any other live loads.
7) * This truss has been designed for a live load of 30.0psf on the bottom chord in all areas where a rectangle 3-6-0 tall by 2-0-0 wide will fit between the bottom chord and any other members.
8) Provide mechanical connection (by others) of truss to bearing plate capable of withstanding 100 lb uplift at joint(s) 2, 6 except (jt=lb) 10=148, 8=147.
9) See Standard Industry Piggyback Truss Connection Detail for Connection to base truss as applicable, or consult qualified building designer.

July 12,2023

ENGINEERING BY TRENCO A MiTek Affiliate
818 Soundside Road
Edenton, NC 27932

Job	Truss	Truss Type	Qty	Ply	Lot 108 South Creek
J0623-3411	V1	VALLEY	1	1	I59478562 Job Reference (optional)

Comtech, Inc, Fayetteville, NC - 28314, 8.430 s Jan 6 2022 MiTek Industries, Inc. Wed Jul 12 07:49:42 2023 Page 1
ID:C5NWnh8QZZzTasfLD?bt5jz_UVZ-RfC?PsB70Hq3NSgPqnL8w3uITXbGKWrCDoi7J4zJC?f

6-8-10 (6-8-10) | 13-5-3 (6-8-9)

Scale = 1:30.5

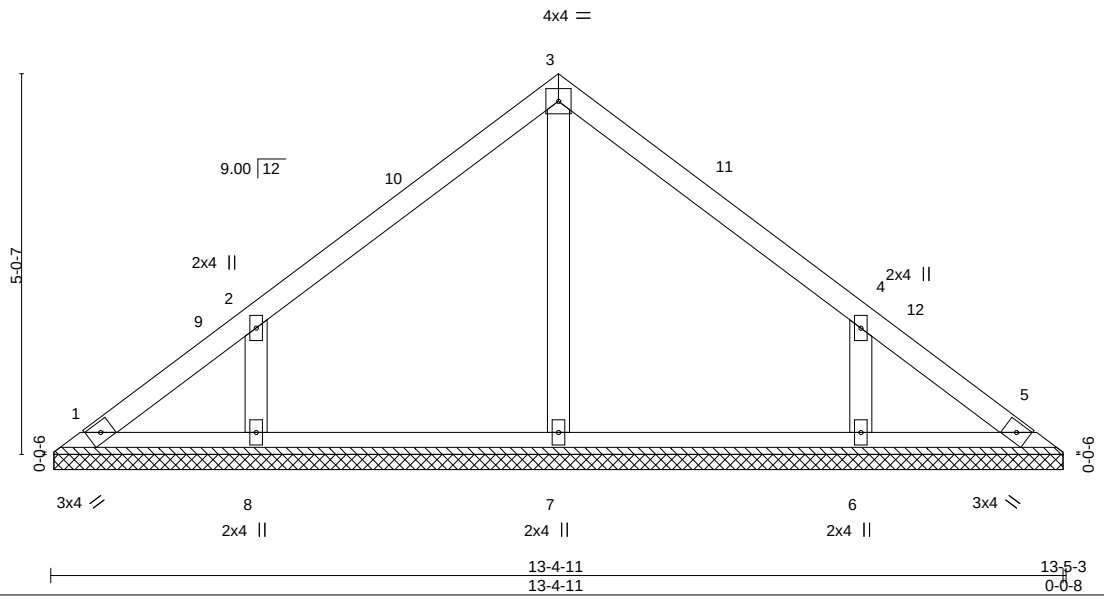

Plate Offsets (X,Y)-- [4:0-0-0,0-0-0]

LOADING (psf)		SPACING- 2-0-0		CSI.		DEFL. in (loc) l/defl L/d		PLATES	GRIP
TCLL	20.0	Plate Grip DOL	1.15	TC	0.13	Vert(LL) n/a - n/a 999		MT20	244/190
TCDL	10.0	Lumber DOL	1.15	BC	0.09	Vert(CT) n/a - n/a 999			
BCLL	0.0 *	Rep Stress Incr	YES	WB	0.06	Horz(CT) 0.00 5 n/a n/a			
BCDL	10.0	Code IRC2015/TPI2014		Matrix-S				Weight: 54 lb	FT = 20%

LUMBER-
TOP CHORD 2x4 SP No.1
BOT CHORD 2x4 SP No.1
OTHERS 2x4 SP No.2

BRACING-
TOP CHORD Structural wood sheathing directly applied or 6-0-0 oc purlins.
BOT CHORD Rigid ceiling directly applied or 10-0-0 oc bracing.

REACTIONS. All bearings 13-4-3.
(lb) - Max Horz 1=-113(LC 8)
Max Uplift All uplift 100 lb or less at joint(s) 1, 5 except 8=-109(LC 12), 6=-109(LC 13)
Max Grav All reactions 250 lb or less at joint(s) 1, 5 except 7=252(LC 1), 8=330(LC 19), 6=330(LC 20)

FORCES. (lb) - Max. Comp./Max. Ten. - All forces 250 (lb) or less except when shown.
WEBS 2-8=-298/217, 4-6=-298/217

NOTES-
1) Unbalanced roof live loads have been considered for this design.
2) Wind: ASCE 7-10; Vult=130mph Vasd=103mph; TCDL=6.0psf; BCDL=6.0psf; h=15ft; Cat. II; Exp C; Enclosed; MWFRS (envelope) and C-C Exterior(2) 0-5-5 to 4-10-1, Interior(1) 4-10-1 to 6-8-10, Exterior(2) 6-8-10 to 11-1-6, Interior(1) 11-1-6 to 12-11-14 zone;C-C for members and forces & MWFRS for reactions shown; Lumber DOL=1.60 plate grip DOL=1.60
3) Gable requires continuous bottom chord bearing.
4) This truss has been designed for a 10.0 psf bottom chord live load nonconcurrent with any other live loads.
5) * This truss has been designed for a live load of 30.0psf on the bottom chord in all areas where a rectangle 3-6-0 tall by 2-0-0 wide will fit between the bottom chord and any other members.
6) Provide mechanical connection (by others) of truss to bearing plate capable of withstanding 100 lb uplift at joint(s) 1, 5 except (jt=lb) 8=109, 6=109.

NORTH CAROLINA PROFESSIONAL SEAL 036322 ENGINEER ERIC A. GILBERT

July 12,2023

ENGINEERING BY TRENCO A MiTek Affiliate
818 Soundside Road
Edenton, NC 27932

Job	Truss	Truss Type	Qty	Ply	Lot 108 South Creek
J0623-3411	V2	VALLEY	1	1	I59478563 Job Reference (optional)

Comtech, Inc, Fayetteville, NC - 28314, 8.430 s Jan 6 2022 MiTek Industries, Inc. Wed Jul 12 07:49:43 2023 Page 1
ID:C5NWnh8QZZzTasfLD?bt5jz_UVZ-RfC?PsB70Hq3NSgPqnL8w3uITXbGKWrCDoi7J4zJC?f

4-8-10 | 9-5-3
4-8-10 | 4-8-9

Scale: 1/2"=1'

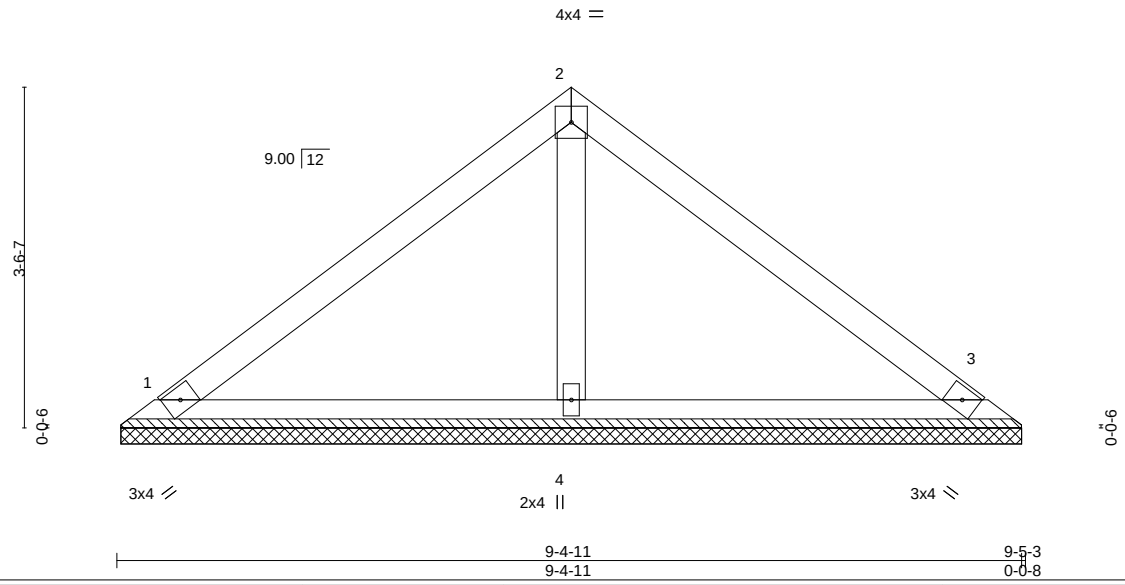

LOADING (psf)			SPACING- 2-0-0		CSI.		DEFL.	in	(loc)	l/defl	L/d	PLATES	GRIP
TCLL	20.0		Plate Grip DOL	1.15	TC	0.19	Vert(LL)	n/a	-	n/a	999	MT20	244/190
TCDL	10.0		Lumber DOL	1.15	BC	0.14	Vert(CT)	n/a	-	n/a	999		
BCLL	0.0	*	Rep Stress Incr	YES	WB	0.04	Horz(CT)	0.00	3	n/a	n/a		
BCDL	10.0		Code IRC2015/TPI2014		Matrix-S							Weight: 34 lb	FT = 20%

LUMBER-
TOP CHORD 2x4 SP No.1
BOT CHORD 2x4 SP No.1
OTHERS 2x4 SP No.2

BRACING-
TOP CHORD Structural wood sheathing directly applied or 6-0-0 oc purlins.
BOT CHORD Rigid ceiling directly applied or 10-0-0 oc bracing.

REACTIONS. (size) 1=9-4-3, 3=9-4-3, 4=9-4-3
Max Horz 1=-77(LC 8)
Max Uplift 1=-21(LC 12), 3=-28(LC 13)
Max Grav 1=176(LC 1), 3=176(LC 1), 4=331(LC 1)

FORCES. (lb) - Max. Comp./Max. Ten. - All forces 250 (lb) or less except when shown.

NOTES-
1) Unbalanced roof live loads have been considered for this design.
2) Wind: ASCE 7-10; Vult=130mph Vasd=103mph; TCDL=6.0psf; BCDL=6.0psf; h=15ft; Cat. II; Exp C; Enclosed; MWFRS (envelope) and C-C Exterior(2) zone;C-C for members and forces & MWFRS for reactions shown; Lumber DOL=1.60 plate grip DOL=1.60
3) Gable requires continuous bottom chord bearing.
4) This truss has been designed for a 10.0 psf bottom chord live load nonconcurrent with any other live loads.
5) * This truss has been designed for a live load of 30.0psf on the bottom chord in all areas where a rectangle 3-6-0 tall by 2-0-0 wide will fit between the bottom chord and any other members.
6) Provide mechanical connection (by others) of truss to bearing plate capable of withstanding 100 lb uplift at joint(s) 1, 3.

NORTH CAROLINA PROFESSIONAL SEAL 036322 ENGINEER ERIC A. GILBERT

July 12,2023

ENGINEERING BY TRENCO A MiTek Affiliate
818 Soundside Road
Edenton, NC 27932

Job	Truss	Truss Type	Qty	Ply	Lot 108 South Creek
J0623-3411	V3	VALLEY	1	1	I59478564 Job Reference (optional)

Comtech, Inc, Fayetteville, NC - 28314, 8.430 s Jan 6 2022 MiTek Industries, Inc. Wed Jul 12 07:49:44 2023 Page 1
ID:C5NWnh8QZZzTasfLD?bt5jz_UVZ-RfC?PsB70Hq3NSgPqnL8w3uITXbGKWrCDoi7J4zJC?f

2-8-10 | 5-5-3
2-8-10 | 2-8-9

Scale = 1:14.6

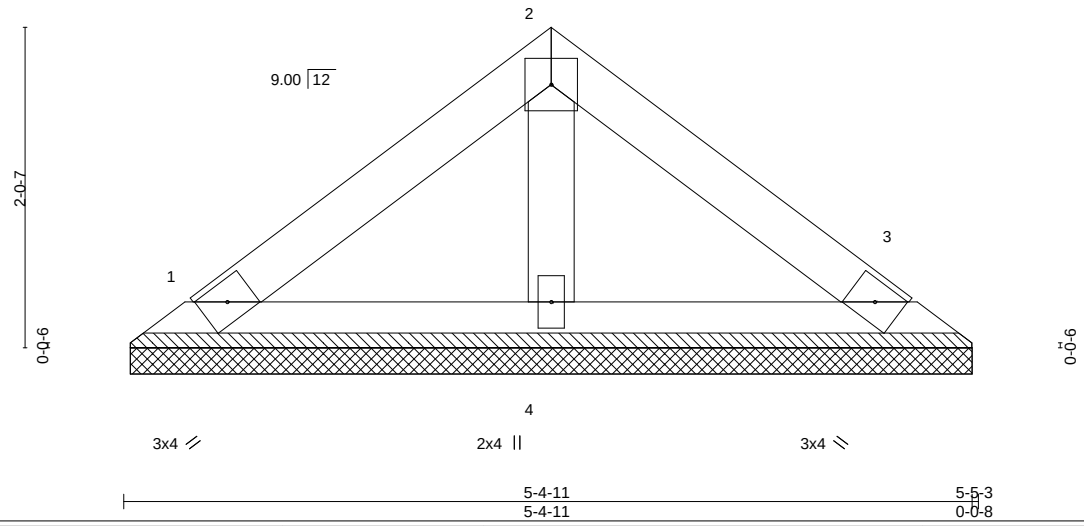

LOADING (psf)		SPACING- 2-0-0		CSI.		DEFL. in (loc) l/defl L/d		PLATES	GRIP
TCLL	20.0	Plate Grip DOL	1.15	TC	0.07	Vert(LL) n/a - n/a 999		MT20	244/190
TCDL	10.0	Lumber DOL	1.15	BC	0.04	Vert(CT) n/a - n/a 999			
BCLL	0.0 *	Rep Stress Incr	YES	WB	0.01	Horz(CT) 0.00 3 n/a n/a			
BCDL	10.0	Code IRC2015/TPI2014		Matrix-P				Weight: 19 lb	FT = 20%

LUMBER-
TOP CHORD 2x4 SP No.1
BOT CHORD 2x4 SP No.1
OTHERS 2x4 SP No.2

BRACING-
TOP CHORD Structural wood sheathing directly applied or 5-5-3 oc purlins.
BOT CHORD Rigid ceiling directly applied or 10-0-0 oc bracing.

REACTIONS. (size) 1=5-4-3, 3=5-4-3, 4=5-4-3
Max Horz 1=-41(LC 8)
Max Uplift 1=-16(LC 12), 3=-20(LC 13)
Max Grav 1=102(LC 1), 3=102(LC 1), 4=160(LC 1)

FORCES. (lb) - Max. Comp./Max. Ten. - All forces 250 (lb) or less except when shown.

NOTES-
1) Unbalanced roof live loads have been considered for this design.
2) Wind: ASCE 7-10; Vult=130mph Vasd=103mph; TCDL=6.0psf; BCDL=6.0psf; h=15ft; Cat. II; Exp C; Enclosed; MWFRS (envelope) and C-C Exterior(2) zone;C-C for members and forces & MWFRS for reactions shown; Lumber DOL=1.60 plate grip DOL=1.60
3) Gable requires continuous bottom chord bearing.
4) This truss has been designed for a 10.0 psf bottom chord live load nonconcurrent with any other live loads.
5) * This truss has been designed for a live load of 30.0psf on the bottom chord in all areas where a rectangle 3-6-0 tall by 2-0-0 wide will fit between the bottom chord and any other members.
6) Provide mechanical connection (by others) of truss to bearing plate capable of withstanding 100 lb uplift at joint(s) 1, 3.

NORTH CAROLINA PROFESSIONAL SEAL 036322 ENGINEER ERIC A. GILBERT

July 12,2023

ENGINEERING BY TRENCO A MiTek Affiliate
818 Soundside Road
Edenton, NC 27932

Symbols

PLATE LOCATION AND ORIENTATION

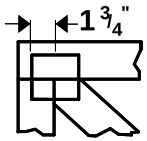

Center plate on joint unless x, y offsets are indicated. Dimensions are in ft-in-sixteenths. Apply plates to both sides of truss and fully embed teeth.

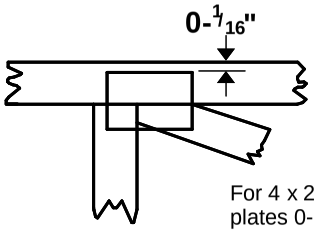

For 4 x 2 orientation, locate plates 0- 1/16" from outside edge of truss.

This symbol indicates the required direction of slots in connector plates.

*** Plate location details available in MiTek 20/20 software or upon request.**

PLATE SIZE

4 x 4

The first dimension is the plate width measured perpendicular to slots. Second dimension is the length parallel to slots.

LATERAL BRACING LOCATION

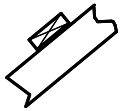

Indicated by symbol shown and/or by text in the bracing section of the output. Use T or I bracing if indicated.

BEARING

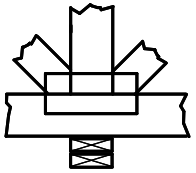

Indicates location where bearings (supports) occur. Icons vary but reaction section indicates joint number where bearings occur. Min size shown is for crushing only.

Industry Standards:

ANSI/TPI1: National Design Specification for Metal Plate Connected Wood Truss Construction.
DSB-89: Design Standard for Bracing.
BCSI: Building Component Safety Information, Guide to Good Practice for Handling, Installing & Bracing of Metal Plate Connected Wood Trusses.

Numbering System

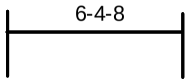

dimensions shown in ft-in-sixteenths
(Drawings not to scale)

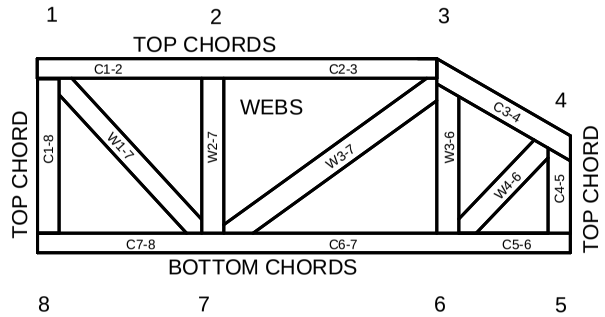

JOINTS ARE GENERALLY NUMBERED/LETTERED CLOCKWISE AROUND THE TRUSS STARTING AT THE JOINT FARTHEST TO THE LEFT.

CHORDS AND WEBS ARE IDENTIFIED BY END JOINT NUMBERS/LETTERS.

PRODUCT CODE APPROVALS

ICC-ES Reports:

ESR-1311, ESR-1352, ESR1988
ER-3907, ESR-2362, ESR-1397, ESR-3282

Trusses are designed for wind loads in the plane of the truss unless otherwise shown.

Lumber design values are in accordance with ANSI/TPI 1 section 6.3 These truss designs rely on lumber values established by others.

MiTek

ENGINEERING BY TRENCO
A MiTek Affiliate

General Safety Notes

Failure to Follow Could Cause Property Damage or Personal Injury

1. Additional stability bracing for truss system, e.g. diagonal or X-bracing, is always required. See BCSI.
2. Truss bracing must be designed by an engineer. For wide truss spacing, individual lateral braces themselves may require bracing, or alternative Tor I bracing should be considered.
3. Never exceed the design loading shown and never stack materials on inadequately braced trusses.
4. Provide copies of this truss design to the building designer, erection supervisor, property owner and all other interested parties.
5. Cut members to bear tightly against each other.
6. Place plates on each face of truss at each joint and embed fully. Knots and wane at joint locations are regulated by ANSI/TPI 1.
7. Design assumes trusses will be suitably protected from the environment in accord with ANSI/TPI 1.
8. Unless otherwise noted, moisture content of lumber shall not exceed 19% at time of fabrication.
9. Unless expressly noted, this design is not applicable for use with fire retardant, preservative treated, or green lumber.
10. Camber is a non-structural consideration and is the responsibility of truss fabricator. General practice is to camber for dead load deflection.
11. Plate type, size, orientation and location dimensions indicated are minimum plating requirements.
12. Lumber used shall be of the species and size, and in all respects, equal to or better than that specified.
13. Top chords must be sheathed or purlins provided at spacing indicated on design.
14. Bottom chords require lateral bracing at 10 ft. spacing, or less, if no ceiling is installed, unless otherwise noted.
15. Connections not shown are the responsibility of others.
16. Do not cut or alter truss member or plate without prior approval of an engineer.
17. Install and load vertically unless indicated otherwise.
18. Use of green or treated lumber may pose unacceptable environmental, health or performance risks. Consult with project engineer before use.
19. Review all portions of this design (front, back, words and pictures) before use. Reviewing pictures alone is not sufficient.
20. Design assumes manufacture in accordance with ANSI/TPI 1 Quality Criteria.
21. The design does not take into account any dynamic or other loads other than those expressly stated.

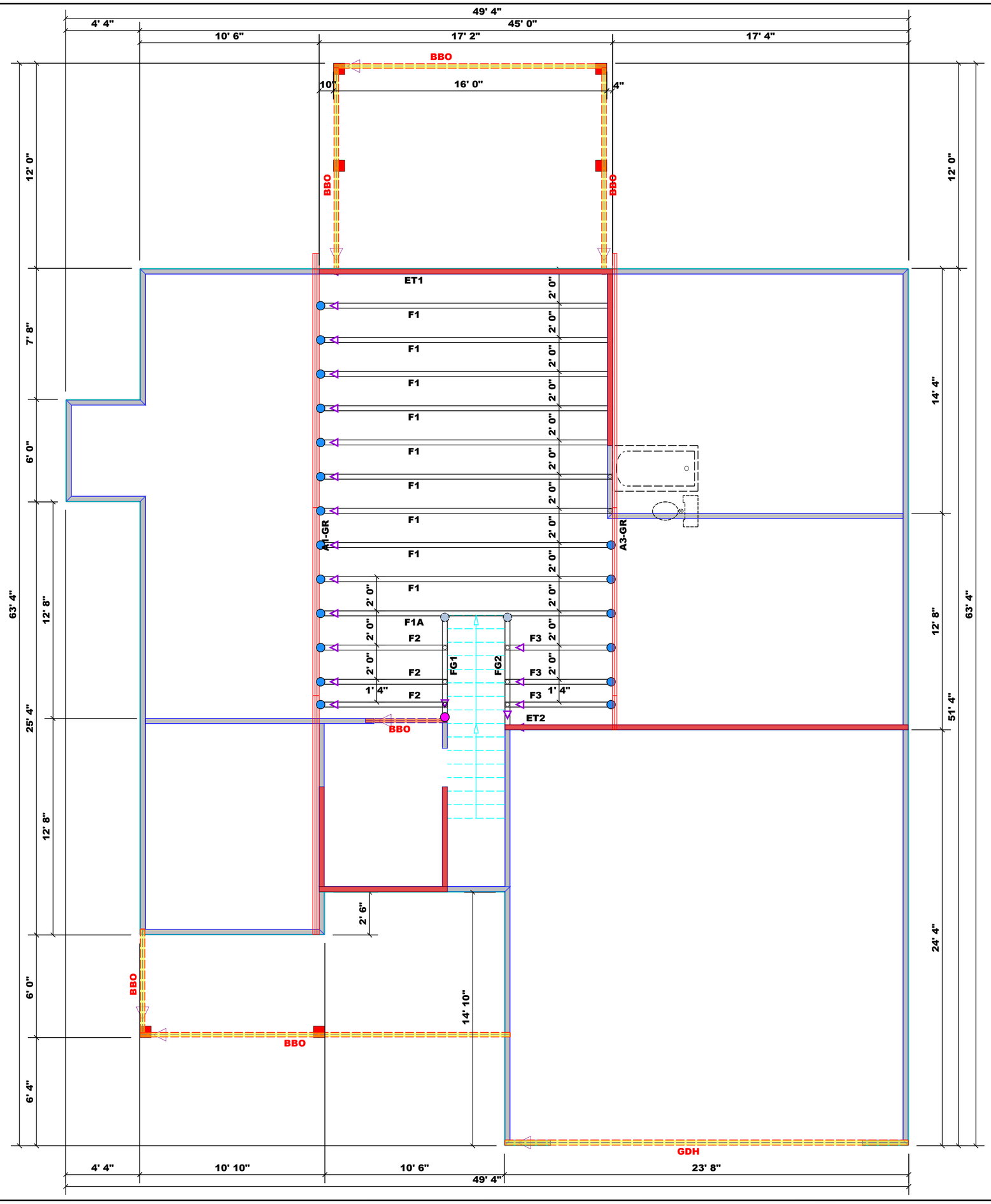

Hatch Legend
2nd Floor Walls
Flush Beam
Drop Beam

Dimension Notes
1. All exterior wall to wall dimensions are to face of sheathing unless noted otherwise 2. All interior wall dimensions are to face of frame wall unless noted otherwise 3. All exterior wall to truss dimensions are to face of frame wall unless noted otherwise

All Walls Shown Are Considered Load Bearing

Plumbing Drop Notes
1. Plumbing drop locations shown are NOT exact. 2. Contractor to verify ALL plumbing drop locations prior to setting Roof Trusses. 3. Adjust spacing as needed not to exceed 24"oc.

Connector Information					Nail Information	
Sym	Product	Manuf	Qty	Supported Member	Header	Truss
●	HUS410	USP	19	NA	16d/3-1/2"	16d/3-1/2"
●	MSH422	USP	2	Varies	10d/3"	10d/3"
●	HD410IF	USP	1	NA	16d/3-1/2"	16d/3-1/2"

Products				
PlotID	Length	Product	Plies	Net Qty
GDH	24' 0"	1-3/4"x 11-7/8" LVL Kerto-S	2	2

1 Truss Placement Plan
Scale: 1/4"=1'

▲ = Indicates Left End of Truss
(Reference Engineered Truss Drawing)
Do NOT Erect Truss Backwards

COMTECH
ROOF & FLOOR TRUSSES & BEAMS
Reilly Road Industrial Park
Fayetteville, N.C. 28309
Phone: (910) 864-8787
Fax: (910) 864-4444

Bearing reactions less than or equal to 3000# are deemed to comply with the prescriptive Code requirements. The contractor shall refer to the attached Tables (derived from the prescriptive Code requirements) to determine the minimum foundation size and number of wood studs required to support reactions greater than 3000# but not greater than 15000#. A registered design professional shall be retained to design the support system for any reaction that exceeds those specified in the attached Tables. A registered design professional shall be retained to design the support system for all reactions that exceed 15000#.

Signature David Landry

David Landry

LOAD CHART FOR JACK STUDS

(BASED ON TABLES R502.5(1) & (b))

NUMBER OF JACK STUDS REQUIRED @ EA END OF HEADER/GIRDER

END REACTION (UP TO)	REQ'D STUDS FOR (2) 2x'S HEADER	END REACTION (UP TO)	REQ'D STUDS FOR (3) 2x'S HEADER	END REACTION (UP TO)	REQ'D STUDS FOR (4) 2x'S HEADER
1700	1	2550	1	3400	1
3400	2	5100	2	6800	2
5100	3	7650	3	10200	3
6800	4	10200	4	13600	4
8500	5	12750	5	17000	5
10200	6	15300	6		
11900	7				
13600	8				
15300	9				

CITY / CO.	Lillington / Harnett
ADDRESS	Site Address
MODEL	Roof
DATE REV.	06/29/23
DRAWN BY	David Landry
SALES REP.	Neil Baggett
BUILDER	J.W. Sealey
JOB NAME	Lot 108 South Creek
PLAN	Royal
SEAL DATE	Seal Date
QUOTE #	Quote #
JOB #	J0623-3411

THIS IS A TRUSS PLACEMENT DIAGRAM ONLY. These trusses are designed as individual building components to be incorporated into the building design at the specification of the building designer. See individual design sheets for each truss design identified on the placement drawing. The building designer is responsible for temporary and permanent bracing of the roof and floor system and for the overall structure. The design of the truss support structure including headers, beams, walls, and columns is the responsibility of the building designer. For general guidance regarding bracing, consult BCSI-B1 and BCSI-B3 provided with the truss delivery package or online @ sbcindustry.com

Reaction Summary of Order

ComTech
ROOF & FLOOR TRUSSES & BEAMS
Reilly Road Industrial Park P.O. Box 40408
Fayetteville, N.C. 28309 (910) 864-TRUS

REQ. QUOTE DATE	/ /	ORDER #	J0623-3412
ORDER DATE	06/29/23	QUOTE #	
DELIVERY DATE	/ /	CUSTOMER ACCT #	006359
DATE OF INVOICE	/ /	CUSTOMER PO #	
ORDERED BY	Tommy Collins	INVOICE #	
COUNTY	Harnett	TERMS	
SUPERINTENDANT	Tommy Collins	SALES REP	Neil Baggett
JOBSITE PHONE #	(910) 303--5937	SALES AREA	David Landry

SOLD TO
McDonald Lumber Company
126 Cedar Creek Road
Fayetteville, NC 28302
(910) 483-0381

SHIP TO
J.W. Sealey
Lillington, NC

JOB NAME: Lot 108 South Creek **LOT #** 108 **SUBDIV:** South Creek
MODEL: Floor **TAG:** Royal **JOB CATEGORY:** _

DELIVERY INSTRUCTIONS:

SPECIAL INSTRUCTIONS:

PLAN SEAL DATE:

BUILDING DEPARTMENT	OVERHANG INFO		HEEL HEIGHT	00-06-08	REQ. LAYOUTS				REQ. ENGINEERING					BY	DATE
Floor Order	END CUT	RETURN											QUOTE	DTL	06/29/23
													LAYOUT	DTL	06/29/23
	PLUMB	NO	GABLE STUDS	16 IN. OC			JOBSITE	1			JOBSITE	1	CUTTING	DTL	06/29/23

FLOOR TRUSSES

LOADING INFORMATION

TCLL-TCDL-BCLL-BCDL	STRESS INCR.
40.0,10.0,0.0,5.0	1.00

FLOOR TRUSS SPACING: 24.0 IN. O.C. (TYP.)

FLOOR PROFILE	QTY PLY	DEPTH ID	BASE SPAN	O/A SPAN	END TYPE LEFT	END TYPE RIGHT	INT BEARING SIZE	INT BEARING LOCATION	REACTIONS				
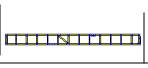	1	01-04-00 ET1	17-02-00	17-02-00					Joint 16 39.3 lbs.	Joint 17 140.9 lbs.	Joint 18 148.6 lbs.	Joint 19 146.2 lbs.	Joint 20 146.8 lbs.
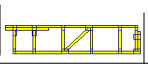	1	01-04-00 ET2	06-03-08	06-03-08					Joint 9 26.4 lbs.	Joint 10 128.8 lbs.	Joint 11 150.6 lbs.	Joint 12 145.6 lbs.	Joint 13 134.6 lbs.
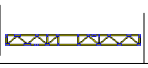	9	01-04-00 F1	17-02-00	17-02-00					Joint 13 930.4 lbs. 449.7 lbs.	Joint 14 1023.9 lbs. 498.6 lbs.	Joint 21 1755.4 lbs. 732.2 lbs.	Joint 24 1023.9 lbs. 514.2 lbs.	
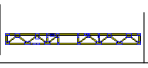	1	01-04-00 F1A	17-02-00	17-02-00					Joint 14 1519.4 lbs. 1090.3 lbs.	Joint 22 1441.1 lbs. 1025.5 lbs.			
	3	01-04-00 F2	07-06-00	07-06-00					Joint 7 383.9 lbs. 207.2 lbs.	Joint 12 383.9 lbs. 210.2 lbs.			
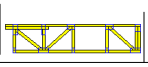	3	01-04-00 F3	06-03-08	06-03-08					Joint 1 317.4 lbs. 149.8 lbs.	Joint 7 317.4 lbs. 216.7 lbs.			
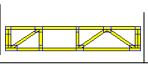	1	01-01-00 FG1	06-00-00	06-00-00					Joint 6 650.3 lbs. 540.3 lbs.	Joint 9 849.4 lbs. 810.2 lbs.			
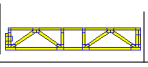	1	01-01-00 FG2	06-08-00	06-08-00					Joint 7 649.3 lbs. 536.6 lbs.	Joint 10 702.4 lbs. 623.5 lbs.			

ITEMS

QTY	ITEM TYPE	SIZE	LENGTH FT-IN-16	PART NUMBER	NOTES

Reaction Summary of Order

ComTech
ROOF & FLOOR
TRUSSES & BEAMS
Reilly Road Industrial Park P.O. Box 40408
Fayetteville, N.C. 28309 (910) 864-TRUS

REQ. QUOTE DATE	/ /	**ORDER #**	J0623-3412
ORDER DATE	06/29/23	**QUOTE #**	
DELIVERY DATE	/ /	**CUSTOMER ACCT #**	006359
DATE OF INVOICE	/ /	**CUSTOMER PO #**	
ORDERED BY	Tommy Collins	**INVOICE #**	
COUNTY	Harnett	**TERMS**	
SUPERINTENDANT	Tommy Collins	**SALES REP**	Neil Baggett
JOBSITE PHONE #	(910) 303--5937	**SALES AREA**	David Landry

SOLD TO
McDonald Lumber Company
126 Cedar Creek Road
Fayetteville, NC 28302
(910) 483-0381

SHIP TO
J.W. Sealey
Lillington, NC

JOB NAME: Lot 108 South Creek **LOT #** 108 **SUBDIV:** South Creek
MODEL: Floor **TAG:** Royal **JOB CATEGORY:** _

DELIVERY INSTRUCTIONS:

SPECIAL INSTRUCTIONS:

PLAN SEAL DATE:

BUILDING DEPARTMENT
Floor Order

OVERHANG INFO		HEEL HEIGHT	00-06-08	REQ. LAYOUTS				REQ. ENGINEERING					BY	DATE
END CUT	RETURN											QUOTE	DTL	06/29/23
												LAYOUT	DTL	06/29/23
PLUMB	NO	GABLE STUDS	16 IN. OC			JOBSITE	1			JOBSITE	1	CUTTING	DTL	06/29/23

ITEMS

QTY	ITEM TYPE	SIZE	LENGTH FT-IN-16	PART NUMBER	NOTES
1	Hangers, USP	HD410IF			SIMPSON (HUC410)
19	Hangers, USP	HUS 410			SIMPSON (HUS410)
2	LVL Beams (Sized)	LVL, 1-3/4" x 14" (S)	24-00-00		GDH
2	Hangers, USP	MSH422			SIMPSON (THA422)

Client:	J.W. Sealey	Date:	7/13/2023
Project:		Input by:	David Landry
Address:		Job Name:	Lot 108 South Creek
		Project #:	J0623-3412

GDH Kerto-S LVL 1.750" X 14.000" 2-Ply - PASSED

Level: Level

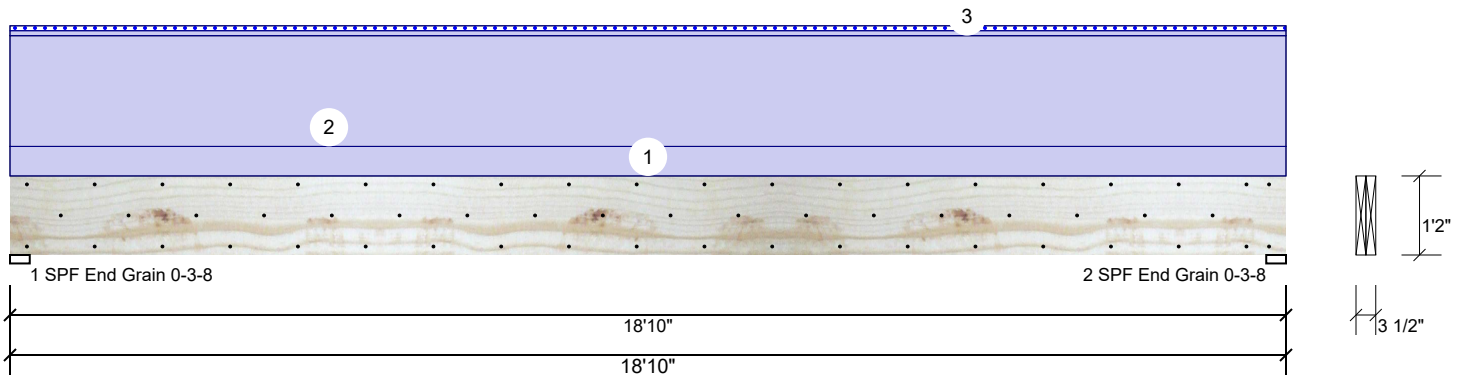

Member Information

Type:	Girder	Application:	Floor
Plies:	2	Design Method:	ASD
Moisture Condition:	Dry	Building Code:	IBC/IRC 2015
Deflection LL:	480	Load Sharing:	No
Deflection TL:	360	Deck:	Not Checked
Importance:	Normal - II	Ceiling:	Gypsum 1/2"
Temperature:	Temp <= 100°F		

Reactions UNPATTERNED lb (Uplift)

Brg	Direction	Live	Dead	Snow	Wind	Const
1	Vertical	0	2975	188	0	0
2	Vertical	0	2975	188	0	0

Bearings

Bearing	Length	Dir.	Cap.	React D/L lb	Total	Ld. Case	Ld. Comb.
1 - SPF End Grain	3.500"	Vert	31%	2975 / 188	3163	L	D+S
2 - SPF End Grain	3.500"	Vert	31%	2975 / 188	3163	L	D+S

Analysis Results

Analysis	Actual	Location	Allowed	Capacity	Comb.	Case
Moment	13332 ft-lb	9'5"	24299 ft-lb	0.549 (55%)	D	Uniform
Unbraced	14176 ft-lb	9'5"	14233 ft-lb	0.996 (100%)	D+S	L
Shear	2527 lb	1'5 1/2"	9408 lb	0.269 (27%)	D	Uniform
LL Defl inch	0.034 (L/6479)	9'5 1/16"	0.459 (L/480)	0.074 (7%)	S	L
TL Defl inch	0.572 (L/386)	9'5 1/16"	0.612 (L/360)	0.933 (93%)	D+S	L

Design Notes

1. Provide support to prevent lateral movement and rotation at the end bearings. Lateral support may also be required at the interior bearings by the building code.
2. Fasten all plies using 3 rows of 10d Box nails (.128x3") at 12" o.c. Maximum end distance not to exceed 6".
3. Refer to last page of calculations for fasteners required for specified loads.
4. Girders are designed to be supported on the bottom edge only.
5. Top loads must be supported equally by all plies.
6. Top must be laterally braced at a maximum of 7'2 9/16" o.c.
7. Lateral slenderness ratio based on single ply width.

ID	Load Type	Location	Trib Width	Side	Dead 0.9	Live 1	Snow 1.15	Wind 1.6	Const. 1.25	Comments
1	Uniform			Top	60 PLF	0 PLF	0 PLF	0 PLF	0 PLF	Wall
2	Uniform			Top	225 PLF	0 PLF	0 PLF	0 PLF	0 PLF	B1GE
3	Tie-In Far	0-0-0 to 18-10-0	1-0-0	Top	20 PSF	0 PSF	20 PSF	0 PSF	0 PSF	Roof
3	Tie-In Near	0-0-0 to 18-10-0	0-0-0	Top	20 PSF	0 PSF	20 PSF	0 PSF	0 PSF	Roof
	Self Weight				11 PLF					

Notes

Calculated Structured Designs is responsible only of the structural adequacy of this component based on the design criteria and loadings shown. It is the responsibility of the customer and/or the contractor to ensure the component suitability of the intended application, and to verify the dimensions and loads.

Lumber

1. Dry service conditions, unless noted otherwise
2. LVL not to be treated with fire retardant or corrosive chemicals

Handling & Installation

1. LVL beams must not be cut or drilled
2. Refer to manufacturer's product information regarding installation requirements, multi-ply fastening details, beam strength values, and code approvals
3. Damaged Beams must not be used
4. Design assumes top edge is laterally restrained
5. Provide lateral support at bearing points to avoid lateral displacement and rotation
6. For flat roofs provide proper drainage to prevent ponding

This design is valid until 5/29/2026

Manufacturer Info

Metsä Wood
301 Merritt 7 Building, 2nd Floor
Norwalk, CT 06851
(800) 622-5850
www.metsawood.com/us

Comtech, Inc.
1001 S Reilly Rd., NC
28314
(910) 864-8787

Client:	J.W. Sealey	Date:	7/13/2023
Project:		Input by:	David Landry
Address:		Job Name:	Lot 108 South Creek
		Project #:	J0623-3412

GDH Kerto-S LVL 1.750" X 14.000" 2-Ply - PASSED

Level: Level

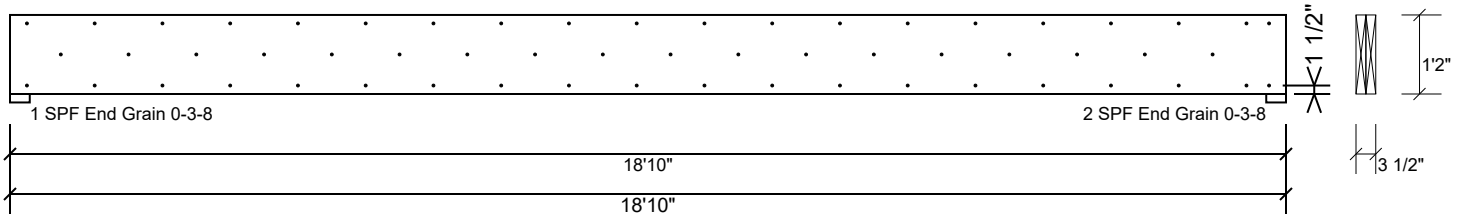

Multi-Ply Analysis

Fasten all plies using 3 rows of 10d Box nails (.128x3") at 12" o.c.. Maximum end distance not to exceed 6".

Capacity	0.0 %
Load	0.0 PLF
Yield Limit per Foot	245.6 PLF
Yield Limit per Fastener	81.9 lb.
C_M	1
Yield Mode	IV
Edge Distance	1 1/2"
Min. End Distance	3"
Load Combination	
Duration Factor	1.00

Notes

Calculated Structured Designs is responsible only of the structural adequacy of this component based on the design criteria and loadings shown. It is the responsibility of the customer and/or the contractor to ensure the component suitability of the intended application, and to verify the dimensions and loads.

Lumber

1. Dry service conditions, unless noted otherwise
2. LVL not to be treated with fire retardant or corrosive chemicals

Handling & Installation

1. LVL beams must not be cut or drilled
2. Refer to manufacturer's product information regarding installation requirements, multi-ply fastening details, beam strength values, and code approvals
3. Damaged Beams must not be used
4. Design assumes top edge is laterally restrained
5. Provide lateral support at bearing points to avoid lateral displacement and rotation
6. For flat roofs provide proper drainage to prevent ponding

This design is valid until 5/29/2026

Manufacturer Info

Metsä Wood
301 Merritt 7 Building, 2nd Floor
Norwalk, CT 06851
(800) 622-5850
www.metsawood.com/us

Comtech, Inc.
1001 S Reilly Rd., NC
28314
(910) 864-8787

ENGINEERING BY TRENCO
A MiTek Affiliate

Trenco
818 Soundside Rd
Edenton, NC 27932

Re: J0623-3412
Lot 108 South Creek

The truss drawing(s) referenced below have been prepared by Truss Engineering Co. under my direct supervision based on the parameters provided by Comtech, Inc - Fayetteville.

Pages or sheets covered by this seal: I59478565 thru I59478572

My license renewal date for the state of North Carolina is December 31, 2023.

North Carolina COA: C-0844

NORTH CAROLINA PROFESSIONAL SEAL 036322 ENGINEER ERIC A. GILBERT

July 12,2023

Gilbert, Eric

IMPORTANT NOTE: The seal on these truss component designs is a certification that the engineer named is licensed in the jurisdiction(s) identified and that the designs comply with ANSI/TPI 1. These designs are based upon parameters shown (e.g., loads, supports, dimensions, shapes and design codes), which were given to MiTek or TRENCO. Any project specific information included is for MiTek's or TRENCO's customers file reference purpose only, and was not taken into account in the preparation of these designs. MiTek or TRENCO has not independently verified the applicability of the design parameters or the designs for any particular building. Before use, the building designer should verify applicability of design parameters and properly incorporate these designs into the overall building design per ANSI/TPI 1, Chapter 2.

Job	Truss	Truss Type	Qty	Ply	Lot 108 South Creek
J0623-3412	ET1	GABLE	1	1	I59478565 Job Reference (optional)

Comtech, Inc, Fayetteville, NC - 28314, 8.430 s Jan 6 2022 MiTek Industries, Inc. Wed Jul 12 07:49:32 2023 Page 1
ID:C5NWnh8QZZzTasfLD?bt5jz_UVZ-RfC?PsB70Hq3NSgPqnL8w3uITXbGKWrCDoi7J4zJC?f

0-1-8

Scale = 1:28.5

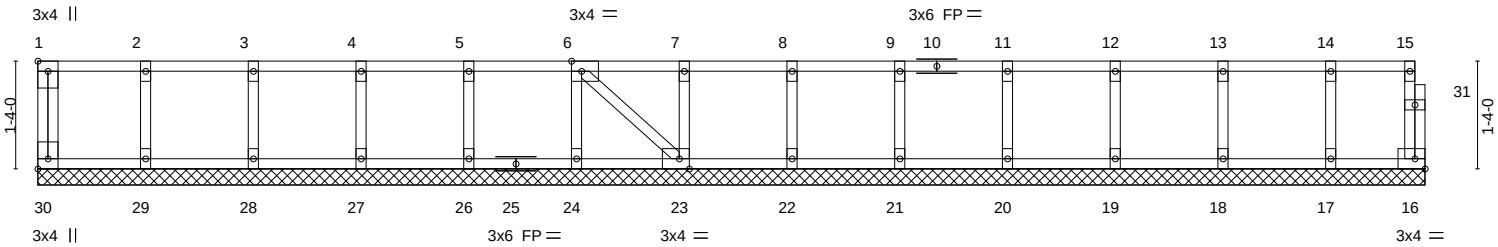

1-4-0	2-8-0	4-0-0	5-4-0	6-8-0	8-0-0	9-4-0	10-8-0	12-0-0	13-4-0	14-8-0	16-0-0	17-2-0
1-4-0	1-4-0	1-4-0	1-4-0	1-4-0	1-4-0	1-4-0	1-4-0	1-4-0	1-4-0	1-4-0	1-4-0	1-2-0

Plate Offsets (X,Y)-- [1:Edge,0-1-8], [6:0-1-8,Edge], [23:0-1-8,Edge], [30:Edge,0-1-8]

LOADING (psf)		**SPACING-**	2-0-0	**CSI.**		**DEFL.**	in	(loc)	l/defl	L/d	**PLATES**	**GRIP**
TCLL	40.0	Plate Grip DOL	1.00	TC	0.06	Vert(LL)	n/a	-	n/a	999	MT20	244/190
TCDL	10.0	Lumber DOL	1.00	BC	0.01	Vert(CT)	n/a	-	n/a	999		
BCLL	0.0	Rep Stress Incr	YES	WB	0.03	Horz(CT)	0.00	16	n/a	n/a		
BCDL	5.0	Code IRC2015/TPI2014		Matrix-S							Weight: 79 lb	FT = 20%F, 11%E

LUMBER-
TOP CHORD 2x4 SP No.1(flat)
BOT CHORD 2x4 SP No.1(flat)
WEBS 2x4 SP No.3(flat)
OTHERS 2x4 SP No.3(flat)

BRACING-
TOP CHORD Structural wood sheathing directly applied or 6-0-0 oc purlins, except end verticals.
BOT CHORD Rigid ceiling directly applied or 10-0-0 oc bracing.

REACTIONS. All bearings 17-2-0.
(lb) - Max Grav All reactions 250 lb or less at joint(s) 30, 16, 29, 28, 27, 26, 24, 23, 22, 21, 20, 19, 18, 17

FORCES. (lb) - Max. Comp./Max. Ten. - All forces 250 (lb) or less except when shown.

NOTES-
1) All plates are 1.5x3 MT20 unless otherwise indicated.
2) Plates checked for a plus or minus 1 degree rotation about its center.
3) Gable requires continuous bottom chord bearing.
4) Truss to be fully sheathed from one face or securely braced against lateral movement (i.e. diagonal web).
5) Gable studs spaced at 1-4-0 oc.
6) Recommend 2x6 strongbacks, on edge, spaced at 10-0-0 oc and fastened to each truss with 3-10d (0.131" X 3") nails. Strongbacks to be attached to walls at their outer ends or restrained by other means.
7) CAUTION, Do not erect truss backwards.

July 12,2023

ENGINEERING BY TRENCO A MiTek Affiliate
818 Soundside Road
Edenton, NC 27932

Job	Truss	Truss Type	Qty	Ply	Lot 108 South Creek
J0623-3412	ET2	GABLE	1	1	I59478566 Job Reference (optional)

Comtech, Inc, Fayetteville, NC - 28314, 8.430 s Jan 6 2022 MiTek Industries, Inc. Wed Jul 12 07:49:33 2023 Page 1
ID:C5NWnh8QZZzTasfLD?bt5jz_UVZ-RfC?PsB70Hq3NSgPqnL8w3uITXbGKWrCDoi7J4zJC?f

Scale = 1:11.8

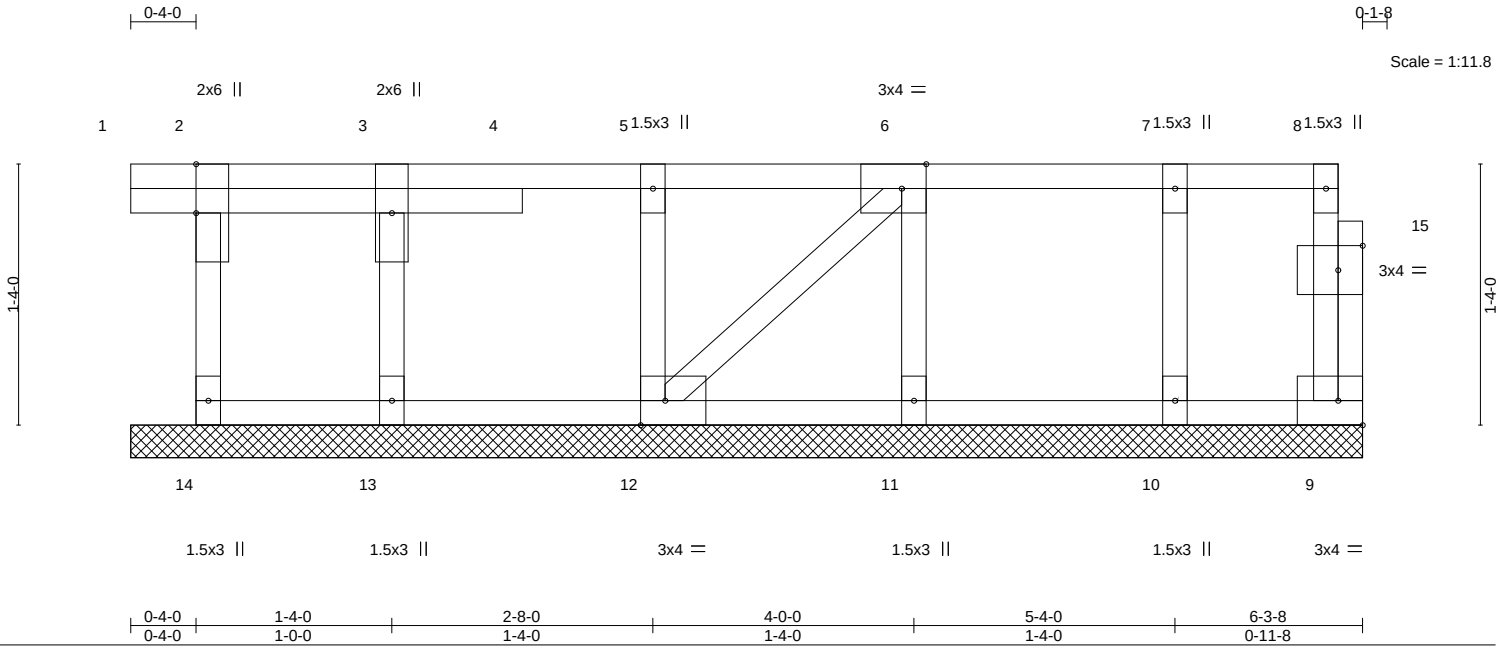

Plate Offsets (X,Y)-- [2:0-3-0,Edge], [6:0-1-8,Edge], [12:0-1-8,Edge], [15:0-1-8,0-1-8]

LOADING (psf)		SPACING- 2-0-0		CSI.		DEFL. in (loc) l/defl L/d					PLATES	GRIP
TCLL	40.0	Plate Grip DOL	1.00	TC	0.06	Vert(LL)	-0.00	1	n/r	180	MT20	244/190
TCDL	10.0	Lumber DOL	1.00	BC	0.01	Vert(CT)	-0.00	1	n/r	120		
BCLL	0.0	Rep Stress Incr	YES	WB	0.03	Horz(CT)	0.00	9	n/a	n/a		
BCDL	5.0	Code IRC2015/TPI2014		Matrix-P							Weight: 34 lb	FT = 20%F, 11%E

LUMBER-

TOP CHORD	2x4 SP No.1(flat)
BOT CHORD	2x4 SP No.1(flat)
WEBS	2x4 SP No.3(flat)
OTHERS	2x4 SP No.3(flat)

BRACING-

TOP CHORD	Structural wood sheathing directly applied or 6-0-0 oc purlins, except end verticals.
BOT CHORD	Rigid ceiling directly applied or 10-0-0 oc bracing.

REACTIONS. All bearings 6-3-8.
(lb) - Max Grav All reactions 250 lb or less at joint(s) 14, 9, 13, 12, 11, 10

FORCES. (lb) - Max. Comp./Max. Ten. - All forces 250 (lb) or less except when shown.

NOTES-
1) Plates checked for a plus or minus 1 degree rotation about its center.
2) Gable requires continuous bottom chord bearing.
3) Truss to be fully sheathed from one face or securely braced against lateral movement (i.e. diagonal web).
4) Gable studs spaced at 1-4-0 oc.
5) Recommend 2x6 strongbacks, on edge, spaced at 10-0-0 oc and fastened to each truss with 3-10d (0.131" X 3") nails. Strongbacks to be attached to walls at their outer ends or restrained by other means.
6) CAUTION, Do not erect truss backwards.

NORTH CAROLINA PROFESSIONAL SEAL 036322 ENGINEER ERIC A. GILBERT

July 12,2023

ENGINEERING BY TRENCO A MiTek Affiliate
818 Soundside Road
Edenton, NC 27932

Job	Truss	Truss Type	Qty	Ply	Lot 108 South Creek
J0623-3412	F1	Floor	9	1	I59478567 Job Reference (optional)

Comtech, Inc, Fayetteville, NC - 28314, 8.430 s Jan 6 2022 MiTek Industries, Inc. Wed Jul 12 07:49:34 2023 Page 1
ID:C5NWnh8QZZzTasfLD?bt5jz_UVZ-RfC?PsB70Hq3NSgPqnL8w3uITXbGKWrCDoi7J4zJC?f

1-3-0 2-5-0

Scale = 1:28.6

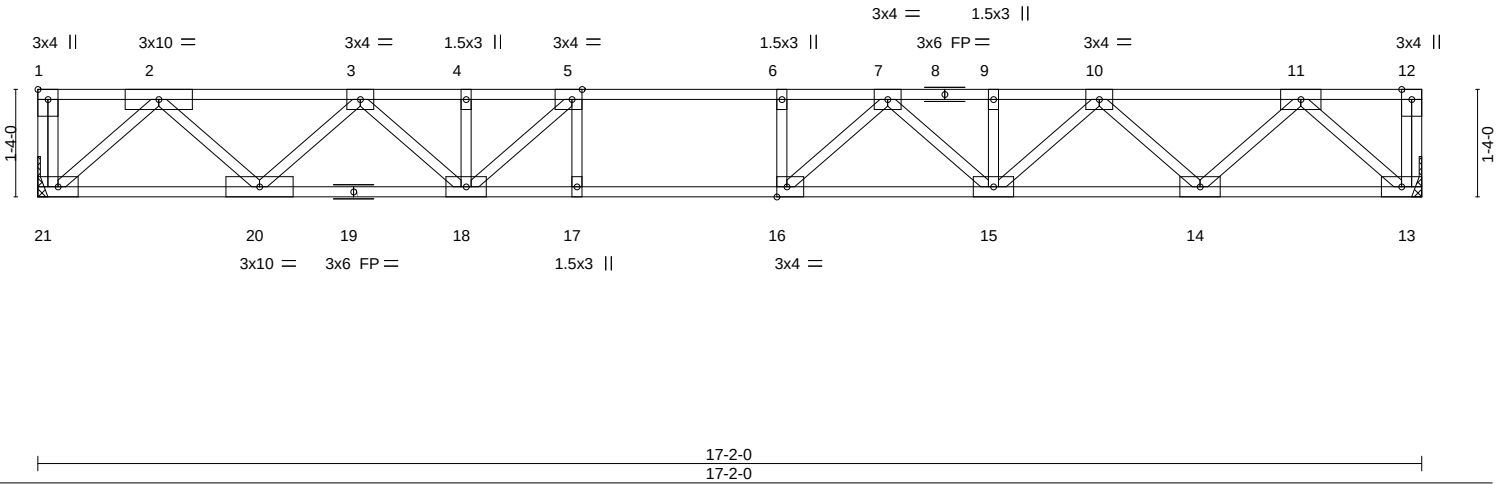

Plate Offsets (X,Y)-- [1:Edge,0-1-8], [5:0-1-8,Edge], [16:0-1-8,Edge]

LOADING (psf)		SPACING-	2-0-0	CSI.		DEFL.	in	(loc)	l/defl	L/d	PLATES	GRIP
TCLL	40.0	Plate Grip DOL	1.00	TC	0.87	Vert(LL)	-0.23	15-16	>885	480	MT20	244/190
TCDL	10.0	Lumber DOL	1.00	BC	0.65	Vert(CT)	-0.31	15-16	>665	360		
BCLL	0.0	Rep Stress Incr	NO	WB	0.45	Horz(CT)	0.04	13	n/a	n/a		
BCDL	5.0	Code IRC2015/TPI2014		Matrix-S							Weight: 91 lb	FT = 20%F, 11%E

LUMBER-
TOP CHORD 2x4 SP No.1(flat)
BOT CHORD 2x4 SP 2400F 2.0E(flat)
WEBS 2x4 SP No.3(flat)

BRACING-
TOP CHORD Structural wood sheathing directly applied or 6-0-0 oc purlins, except end verticals.
BOT CHORD Rigid ceiling directly applied or 10-0-0 oc bracing.

REACTIONS. (size) 21=Mechanical, 13=Mechanical
Max Grav 21=1755(LC 1), 13=930(LC 1)

FORCES. (lb) - Max. Comp./Max. Ten. - All forces 250 (lb) or less except when shown.
TOP CHORD 1-21=-864/0, 2-3=-1681/0, 3-4=-2744/0, 4-5=-2744/0, 5-6=-3197/0, 6-7=-3197/0, 7-9=-2775/0, 9-10=-2775/0, 10-11=-1676/0
BOT CHORD 20-21=0/1002, 18-20=0/2324, 17-18=0/3197, 16-17=0/3197, 15-16=0/3073, 14-15=0/2329, 13-14=0/1000
WEBS 2-21=-1334/0, 2-20=0/945, 3-20=-895/0, 3-18=0/571, 11-13=-1331/0, 11-14=0/940, 10-14=-908/0, 10-15=0/606, 7-15=-406/0, 7-16=-116/506, 6-16=-255/0, 5-18=-858/0

NOTES-
1) Unbalanced floor live loads have been considered for this design.
2) All plates are 3x6 MT20 unless otherwise indicated.
3) Plates checked for a plus or minus 1 degree rotation about its center.
4) Refer to girder(s) for truss to truss connections.
5) Recommend 2x6 strongbacks, on edge, spaced at 10-0-0 oc and fastened to each truss with 3-10d (0.131" X 3") nails. Strongbacks to be attached to walls at their outer ends or restrained by other means.

LOAD CASE(S) Standard
1) Dead + Floor Live (balanced): Lumber Increase=1.00, Plate Increase=1.00
Uniform Loads (plf)
Vert: 13-21=-10, 1-12=-100
Concentrated Loads (lb)
Vert: 1=-825

NORTH CAROLINA PROFESSIONAL SEAL 036322 ENGINEER ERIC A. GILBERT

July 12,2023

ENGINEERING BY TRENCO A MiTek Affiliate
818 Soundside Road
Edenton, NC 27932

Job	Truss	Truss Type	Qty	Ply	Lot 108 South Creek
J0623-3412	F1A	Floor	1	1	I59478568 Job Reference (optional)

Comtech, Inc, Fayetteville, NC - 28314, 8.430 s Jan 6 2022 MiTek Industries, Inc. Wed Jul 12 07:49:35 2023 Page 1
ID:C5NWnh8QZZzTasfLD?bt5jz_UVZ-RfC?PsB70Hq3NSgPqnL8w3uITXbGKWrCDoi7J4zJC?f

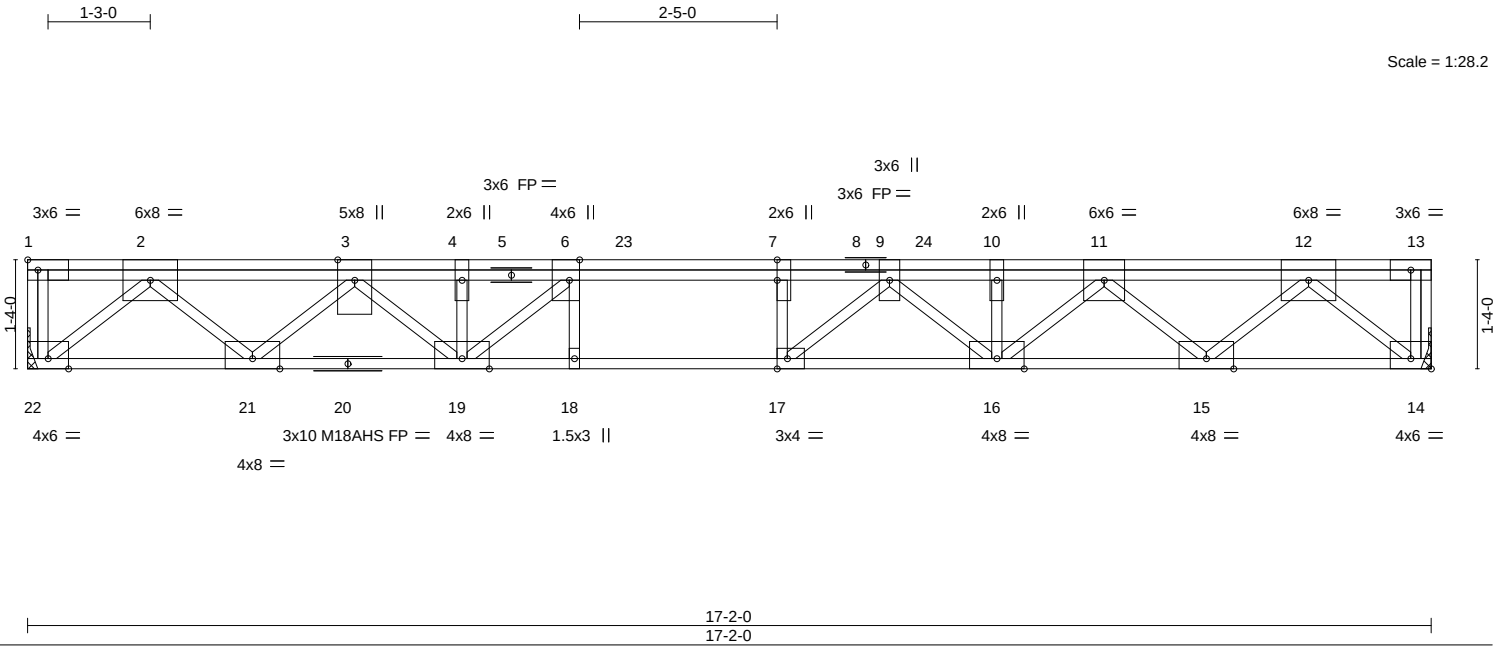

Plate Offsets (X,Y)-- [6:0-3-0,Edge], [7:0-3-0,0-0-0], [14:Edge,0-1-8], [17:0-1-8,Edge]

LOADING (psf)		**SPACING-** 2-0-0		**CSI.**		**DEFL.**	in	(loc)	l/defl	L/d	**PLATES**	**GRIP**
TCLL	40.0	Plate Grip DOL	1.00	TC	0.69	Vert(LL)	-0.28	17	>730	480	MT20	244/190
TCDL	10.0	Lumber DOL	1.00	BC	0.78	Vert(CT)	-0.39	16-17	>520	360	M18AHS	186/179
BCLL	0.0	Rep Stress Incr	NO	WB	0.87	Horz(CT)	0.08	14	n/a	n/a		
BCDL	5.0	Code IRC2015/TPI2014		Matrix-S							Weight: 114 lb	FT = 20%F, 11%E

LUMBER-
TOP CHORD 2x4 SP No.1(flat)
BOT CHORD 2x4 SP 2400F 2.0E(flat)
WEBS 2x4 SP No.3(flat)

BRACING-
TOP CHORD Structural wood sheathing directly applied or 6-0-0 oc purlins, except end verticals.
BOT CHORD Rigid ceiling directly applied or 10-0-0 oc bracing.

REACTIONS. (size) 22=Mechanical, 14=Mechanical
Max Grav 22=1441(LC 1), 14=1519(LC 1)

FORCES. (lb) - Max. Comp./Max. Ten. - All forces 250 (lb) or less except when shown.
TOP CHORD 2-3=-2922/0, 3-4=-5150/0, 4-6=-5150/0, 6-7=-6450/0, 7-9=-6450/0, 9-10=-5600/0, 10-11=-5600/0, 11-12=-3093/0
BOT CHORD 21-22=0/1654, 19-21=0/4155, 18-19=0/6450, 17-18=0/6450, 16-17=0/6351, 15-16=0/4409, 14-15=0/1750
WEBS 2-22=-2154/0, 2-21=0/1719, 3-21=-1673/0, 3-19=0/1321, 12-14=-2278/0, 12-15=0/1822, 11-15=-1785/0, 11-16=0/1580, 10-16=-341/0, 9-16=-998/0, 9-17=-176/415, 7-17=-254/73, 4-19=0/409, 6-19=-1959/0

NOTES-
1) Unbalanced floor live loads have been considered for this design.
2) All plates are MT20 plates unless otherwise indicated.
3) Plates checked for a plus or minus 1 degree rotation about its center.
4) Refer to girder(s) for truss to truss connections.
5) Recommend 2x6 strongbacks, on edge, spaced at 10-0-0 oc and fastened to each truss with 3-10d (0.131" X 3") nails. Strongbacks to be attached to walls at their outer ends or restrained by other means.
6) Hanger(s) or other connection device(s) shall be provided sufficient to support concentrated load(s) 564 lb down at 7-4-4, and 629 lb down at 11-0-4 on top chord. The design/selection of such connection device(s) is the responsibility of others.
7) In the LOAD CASE(S) section, loads applied to the face of the truss are noted as front (F) or back (B).

LOAD CASE(S) Standard
1) Dead + Floor Live (balanced): Lumber Increase=1.00, Plate Increase=1.00
Uniform Loads (plf)
Vert: 14-22=-10, 1-13=-100
Concentrated Loads (lb)
Vert: 23=-550(F) 24=-549(F)

July 12,2023

ENGINEERING BY TRENCO A MiTek Affiliate
818 Soundside Road
Edenton, NC 27932

Job	Truss	Truss Type	Qty	Ply	Lot 108 South Creek
J0623-3412	F2	Floor	3	1	I59478569 Job Reference (optional)

Comtech, Inc, Fayetteville, NC - 28314, 8.430 s Jan 6 2022 MiTek Industries, Inc. Wed Jul 12 07:49:36 2023 Page 1
ID:C5NWnh8QZZzTasfLD?bt5jz_UVZ-RfC?PsB70Hq3NSgPqnL8w3uITXbGKWrCDoi7J4zJC?f

Scale = 1:14.4

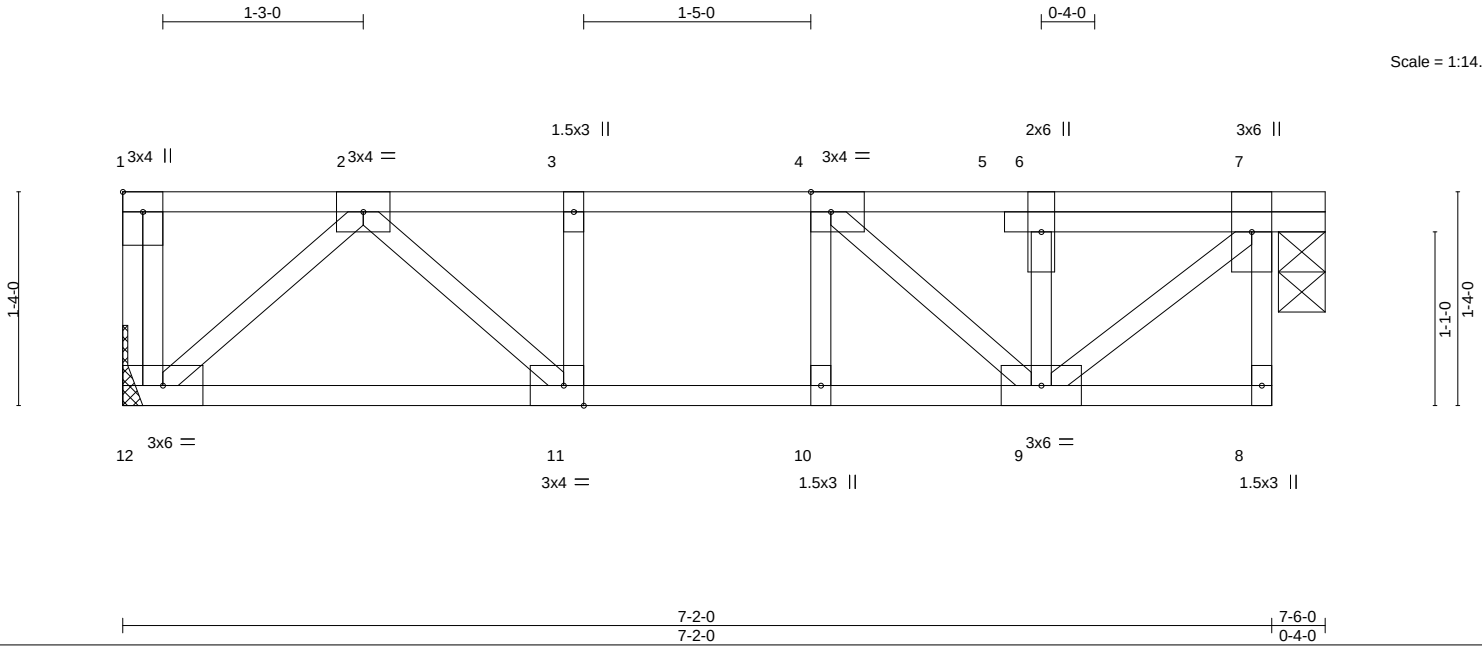

Plate Offsets (X,Y)-- [1:Edge,0-1-8], [4:0-1-8,Edge], [11:0-1-8,Edge]

LOADING (psf)		**SPACING-** 2-0-0		**CSI.**		**DEFL.** in (loc) l/defl L/d		**PLATES**	**GRIP**
TCLL	40.0	Plate Grip DOL	1.00	TC	0.13	Vert(LL) -0.02 11-12 >999 480		MT20	244/190
TCDL	10.0	Lumber DOL	1.00	BC	0.16	Vert(CT) -0.02 11-12 >999 360			
BCLL	0.0	Rep Stress Incr	YES	WB	0.23	Horz(CT) 0.00 7 n/a n/a			
BCDL	5.0	Code IRC2015/TPI2014		Matrix-S				Weight: 44 lb	FT = 20%F, 11%E

LUMBER-
TOP CHORD 2x4 SP No.1(flat)
BOT CHORD 2x4 SP No.1(flat)
WEBS 2x4 SP No.3(flat)

BRACING-
TOP CHORD Structural wood sheathing directly applied or 6-0-0 oc purlins, except end verticals.
BOT CHORD Rigid ceiling directly applied or 10-0-0 oc bracing.

REACTIONS. (size) 12=Mechanical, 7=0-3-8
Max Grav 12=384(LC 1), 7=384(LC 1)

FORCES. (lb) - Max. Comp./Max. Ten. - All forces 250 (lb) or less except when shown.
TOP CHORD 2-3=-541/0, 3-4=-541/0, 4-6=-374/0, 6-7=-371/0
BOT CHORD 11-12=0/360, 10-11=0/541, 9-10=0/541
WEBS 7-9=0/483, 2-12=-479/0, 2-11=0/278, 4-9=-287/0

NOTES-
1) Unbalanced floor live loads have been considered for this design.
2) Plates checked for a plus or minus 1 degree rotation about its center.
3) Refer to girder(s) for truss to truss connections.
4) Recommend 2x6 strongbacks, on edge, spaced at 10-0-0 oc and fastened to each truss with 3-10d (0.131" X 3") nails. Strongbacks to be attached to walls at their outer ends or restrained by other means.
5) Gap between inside of top chord bearing and first diagonal or vertical web shall not exceed 0.500in.
6) CAUTION, Do not erect truss backwards.

NORTH CAROLINA PROFESSIONAL SEAL 036322 ENGINEER ERIC A. GILBERT

July 12,2023

ENGINEERING BY TRENCO A MiTek Affiliate
818 Soundside Road
Edenton, NC 27932

Job	Truss	Truss Type	Qty	Ply	Lot 108 South Creek
J0623-3412	F3	Floor	3	1	I59478570 Job Reference (optional)

Comtech, Inc, Fayetteville, NC - 28314, 8.430 s Jan 6 2022 MiTek Industries, Inc. Wed Jul 12 07:49:36 2023 Page 1
ID:C5NWnh8QZZzTasfLD?bt5jz_UVZ-RfC?PsB70Hq3NSgPqnL8w3uITXbGKWrCDoi7J4zJC?f

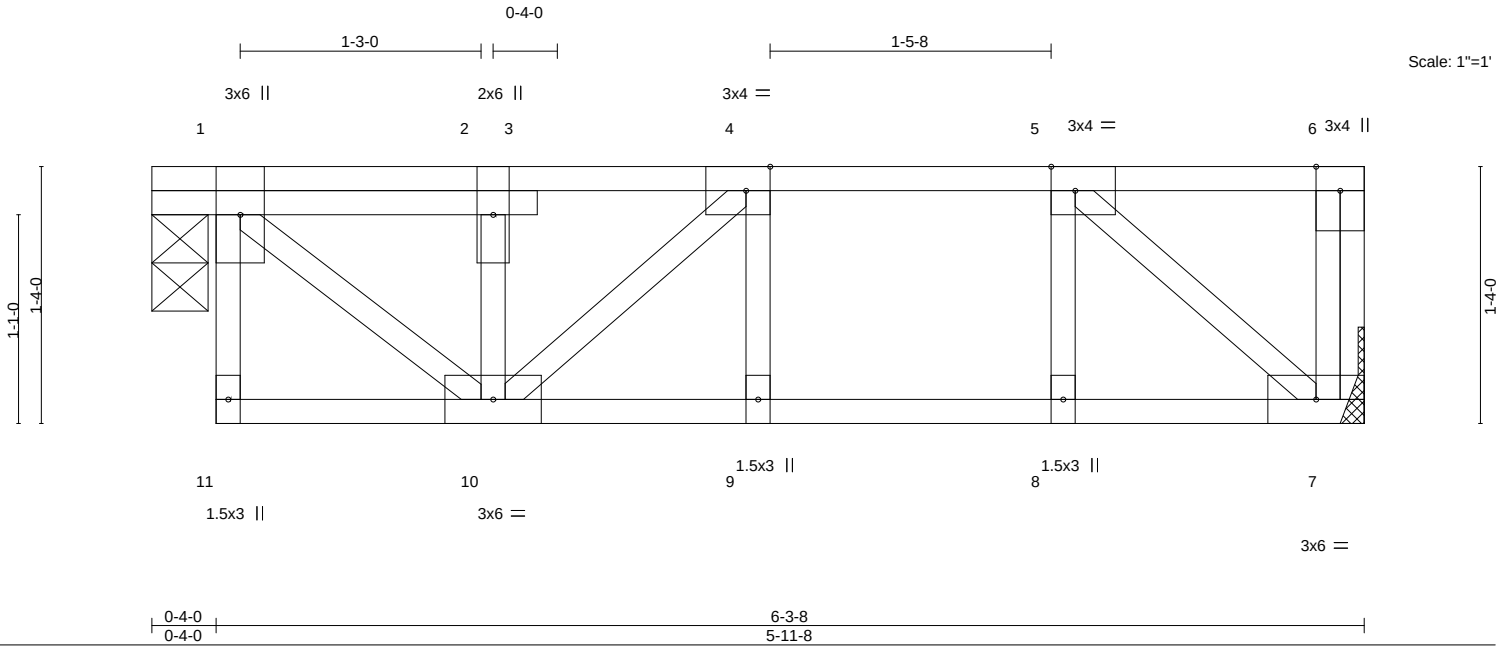

Plate Offsets (X,Y)-- [4:0-1-8,Edge], [5:0-1-8,Edge]

LOADING (psf)		SPACING-	2-0-0	CSI.		DEFL.	in	(loc)	l/defl	L/d	PLATES	GRIP
TCLL	40.0	Plate Grip DOL	1.00	TC	0.20	Vert(LL)	-0.02	9	>999	480	MT20	244/190
TCDL	10.0	Lumber DOL	1.00	BC	0.21	Vert(CT)	-0.03	9	>999	360		
BCLL	0.0	Rep Stress Incr	YES	WB	0.19	Horz(CT)	-0.01	7	n/a	n/a		
BCDL	5.0	Code IRC2015/TPI2014		Matrix-S							Weight: 38 lb	FT = 20%F, 11%E

LUMBER-
TOP CHORD 2x4 SP No.1(flat)
BOT CHORD 2x4 SP No.1(flat)
WEBS 2x4 SP No.3(flat)

BRACING-
TOP CHORD Structural wood sheathing directly applied or 6-0-0 oc purlins, except end verticals.
BOT CHORD Rigid ceiling directly applied or 10-0-0 oc bracing.

REACTIONS. (size) 7=Mechanical, 1=0-3-8
Max Grav 7=317(LC 1), 1=317(LC 1)

FORCES. (lb) - Max. Comp./Max. Ten. - All forces 250 (lb) or less except when shown.
TOP CHORD 1-2=-312/0, 2-4=-329/0, 4-5=-345/0
BOT CHORD 9-10=0/345, 8-9=0/345, 7-8=0/345
WEBS 1-10=0/406, 5-7=-451/0

NOTES-
1) Unbalanced floor live loads have been considered for this design.
2) Plates checked for a plus or minus 1 degree rotation about its center.
3) Refer to girder(s) for truss to truss connections.
4) Recommend 2x6 strongbacks, on edge, spaced at 10-0-0 oc and fastened to each truss with 3-10d (0.131" X 3") nails. Strongbacks to be attached to walls at their outer ends or restrained by other means.
5) Gap between inside of top chord bearing and first diagonal or vertical web shall not exceed 0.500in.
6) CAUTION, Do not erect truss backwards.

July 12,2023

ENGINEERING BY TRENCO A MiTek Affiliate
818 Soundside Road
Edenton, NC 27932

Job	Truss	Truss Type	Qty	Ply	Lot 108 South Creek
J0623-3412	FG1	Floor Girder	1	1	I59478571 Job Reference (optional)

Comtech, Inc, Fayetteville, NC - 28314, 8.430 s Jan 6 2022 MiTek Industries, Inc. Wed Jul 12 07:49:37 2023 Page 1
ID:C5NWnh8QZZzTasfLD?bt5jz_UVZ-RfC?PsB70Hq3NSgPqnL8w3uITXbGKWrCDoi7J4zJC?f

Scale = 1:11.2

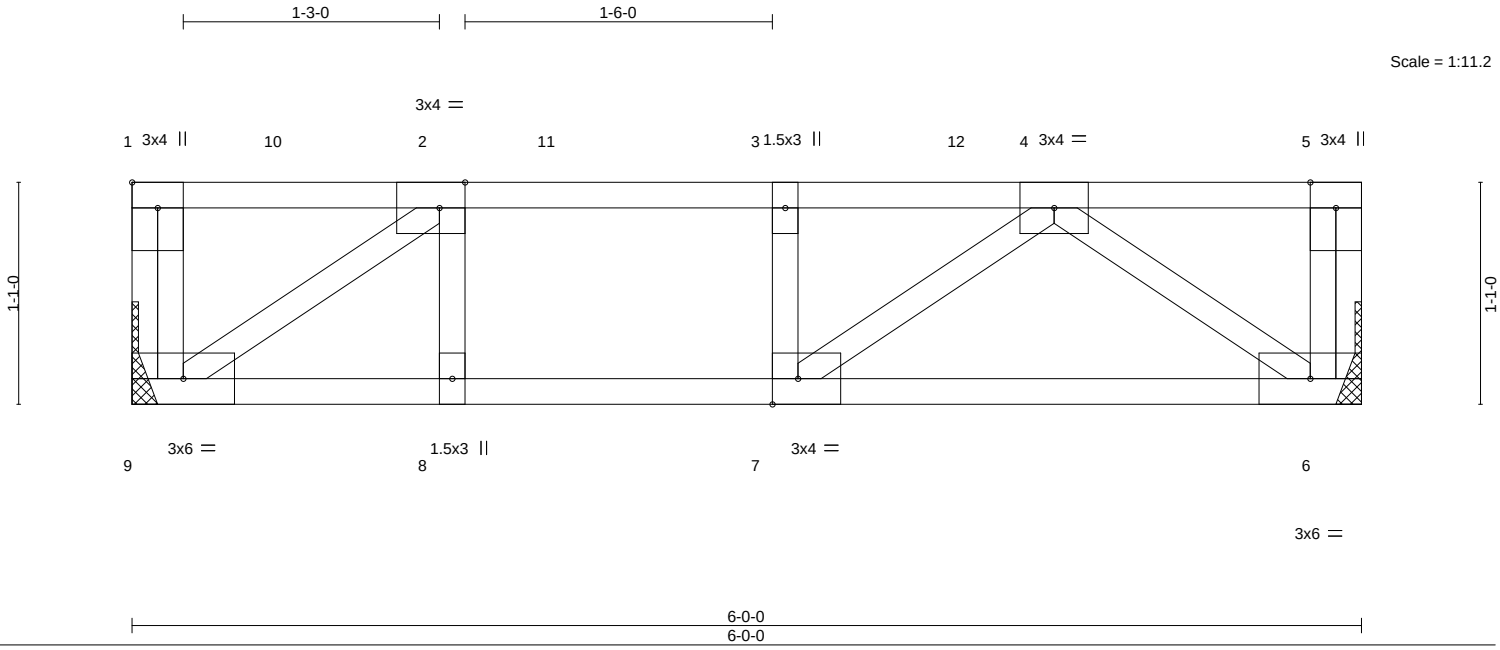

Plate Offsets (X,Y)-- [1:Edge,0-1-8], [2:0-1-8,Edge], [7:0-1-8,Edge]

LOADING (psf)		SPACING- 2-0-0		CSI.		DEFL.	in	(loc)	l/defl	L/d	PLATES	GRIP
TCLL	40.0	Plate Grip DOL	1.00	TC	0.61	Vert(LL)	-0.04	6-7	>999	480	MT20	244/190
TCDL	10.0	Lumber DOL	1.00	BC	0.40	Vert(CT)	-0.06	6-7	>999	360		
BCLL	0.0	Rep Stress Incr	NO	WB	0.31	Horz(CT)	0.01	6	n/a	n/a		
BCDL	5.0	Code IRC2015/TPI2014		Matrix-S							Weight: 32 lb	FT = 20%F, 11%E

LUMBER-
TOP CHORD 2x4 SP No.1(flat)
BOT CHORD 2x4 SP No.1(flat)
WEBS 2x4 SP No.3(flat)

BRACING-
TOP CHORD Structural wood sheathing directly applied or 6-0-0 oc purlins, except end verticals.
BOT CHORD Rigid ceiling directly applied or 10-0-0 oc bracing.

REACTIONS. (size) 9=Mechanical, 6=Mechanical
Max Grav 9=849(LC 1), 6=650(LC 1)

FORCES. (lb) - Max. Comp./Max. Ten. - All forces 250 (lb) or less except when shown.
TOP CHORD 2-3=-1097/0, 3-4=-1097/0
BOT CHORD 8-9=0/1097, 7-8=0/1097, 6-7=0/850
WEBS 4-6=-1036/0, 2-9=-1319/0, 4-7=0/336

NOTES-
1) Unbalanced floor live loads have been considered for this design.
2) Plates checked for a plus or minus 1 degree rotation about its center.
3) Refer to girder(s) for truss to truss connections.
4) Recommend 2x6 strongbacks, on edge, spaced at 10-0-0 oc and fastened to each truss with 3-10d (0.131" X 3") nails. Strongbacks to be attached to walls at their outer ends or restrained by other means.

LOAD CASE(S) Standard
1) Dead + Floor Live (balanced): Lumber Increase=1.00, Plate Increase=1.00
Uniform Loads (plf)
Vert: 6-9=-10, 1-5=-100
Concentrated Loads (lb)
Vert: 10=-299 11=-284 12=-284

NORTH CAROLINA PROFESSIONAL SEAL 036322 ENGINEER ERIC A. GILBERT

July 12,2023

ENGINEERING BY TRENCO A MiTek Affiliate
818 Soundside Road
Edenton, NC 27932

Job	Truss	Truss Type	Qty	Ply	Lot 108 South Creek
J0623-3412	FG2	Floor Girder	1	1	I59478572 Job Reference (optional)

Comtech, Inc, Fayetteville, NC - 28314, 8.430 s Jan 6 2022 MiTek Industries, Inc. Wed Jul 12 07:49:38 2023 Page 1
ID:C5NWnh8QZZzTasfLD?bt5jz_UVZ-RfC?PsB70Hq3NSgPqnL8w3uITXbGKWrCDoi7J4zJC?f

Scale = 1:12.6

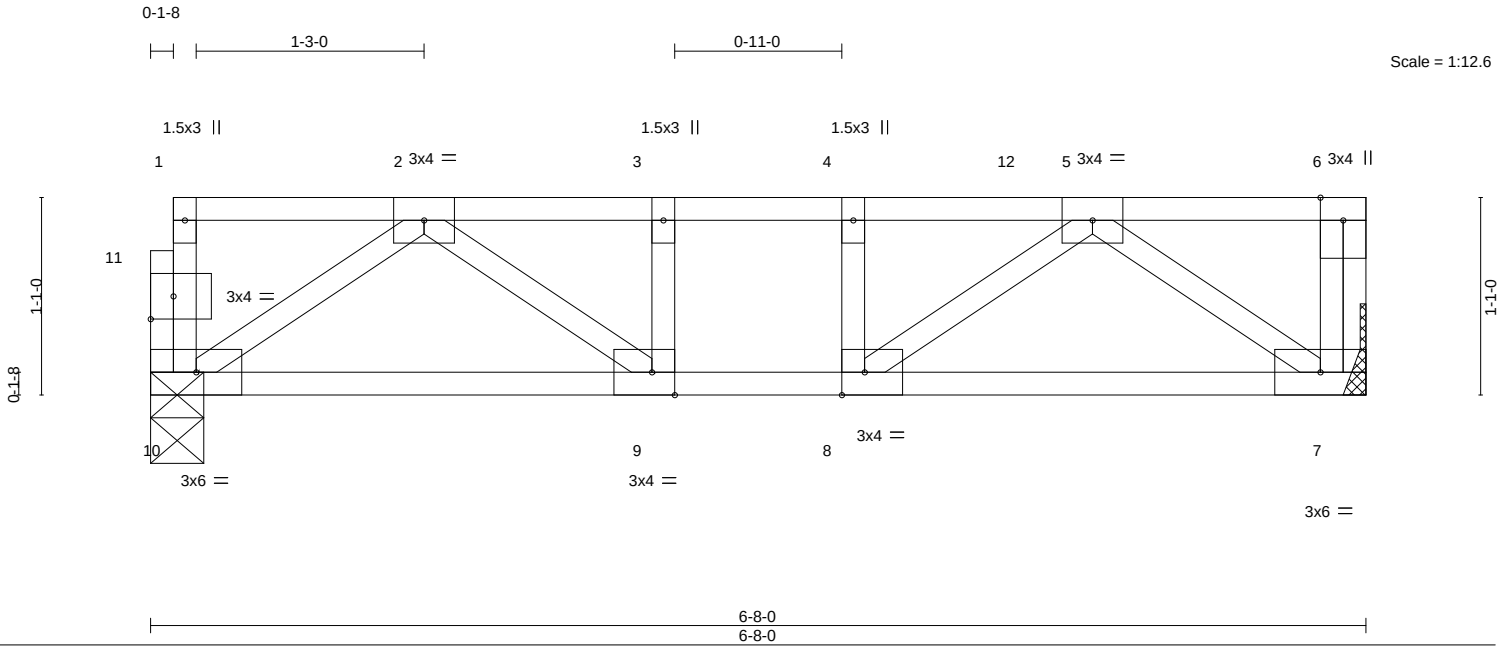

Plate Offsets (X,Y)-- [8:0-1-8,Edge], [9:0-1-8,Edge], [11:0-1-8,0-1-8]

LOADING (psf)		**SPACING-** 2-0-0		**CSI.**		**DEFL.** in (loc) l/defl L/d		**PLATES**	**GRIP**
TCLL	40.0	Plate Grip DOL	1.00	TC	0.28	Vert(LL) -0.02 9-10 >999 480		MT20	244/190
TCDL	10.0	Lumber DOL	1.00	BC	0.30	Vert(CT) -0.03 9-10 >999 360			
BCLL	0.0	Rep Stress Incr	NO	WB	0.26	Horz(CT) 0.01 7 n/a n/a			
BCDL	5.0	Code IRC2015/TPI2014		Matrix-S				Weight: 36 lb	FT = 20%F, 11%E

LUMBER-
TOP CHORD 2x4 SP No.1(flat)
BOT CHORD 2x4 SP No.1(flat)
WEBS 2x4 SP No.3(flat)

BRACING-
TOP CHORD Structural wood sheathing directly applied or 6-0-0 oc purlins, except end verticals.
BOT CHORD Rigid ceiling directly applied or 10-0-0 oc bracing.

REACTIONS. (size) 7=Mechanical, 10=0-3-8
Max Grav 7=649(LC 1), 10=702(LC 1)

FORCES. (lb) - Max. Comp./Max. Ten. - All forces 250 (lb) or less except when shown.
TOP CHORD 2-3=-1244/0, 3-4=-1244/0, 4-5=-1244/0
BOT CHORD 9-10=0/914, 8-9=0/1244, 7-8=0/852
WEBS 5-7=-1039/0, 2-10=-1110/0, 5-8=0/500, 2-9=0/431, 3-9=-253/0

NOTES-
1) Unbalanced floor live loads have been considered for this design.
2) Plates checked for a plus or minus 1 degree rotation about its center.
3) Refer to girder(s) for truss to truss connections.
4) Recommend 2x6 strongbacks, on edge, spaced at 10-0-0 oc and fastened to each truss with 3-10d (0.131" X 3") nails. Strongbacks to be attached to walls at their outer ends or restrained by other means.
5) CAUTION, Do not erect truss backwards.

LOAD CASE(S) Standard
1) Dead + Floor Live (balanced): Lumber Increase=1.00, Plate Increase=1.00
Uniform Loads (plf)
Vert: 7-10=-10, 1-6=-100
Concentrated Loads (lb)
Vert: 2=-217 3=-217 12=-217

July 12,2023

ENGINEERING BY TRENCO A MiTek Affiliate
818 Soundside Road
Edenton, NC 27932

Symbols

PLATE LOCATION AND ORIENTATION

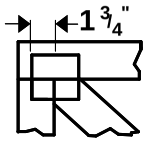

Center plate on joint unless x, y offsets are indicated. Dimensions are in ft-in-sixteenths. Apply plates to both sides of truss and fully embed teeth.

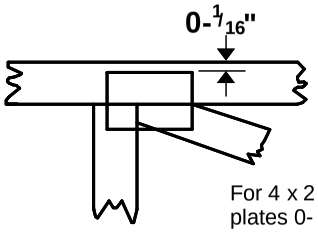

For 4 x 2 orientation, locate plates 0- 1/16" from outside edge of truss.

This symbol indicates the required direction of slots in connector plates.

*** Plate location details available in MiTek 20/20 software or upon request.**

PLATE SIZE

4 x 4

The first dimension is the plate width measured perpendicular to slots. Second dimension is the length parallel to slots.

LATERAL BRACING LOCATION

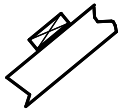

Indicated by symbol shown and/or by text in the bracing section of the output. Use T or I bracing if indicated.

BEARING

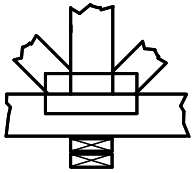

Indicates location where bearings (supports) occur. Icons vary but reaction section indicates joint number where bearings occur. Min size shown is for crushing only.

Industry Standards:

ANSI/TPI1: National Design Specification for Metal Plate Connected Wood Truss Construction.
DSB-89: Design Standard for Bracing.
BCSI: Building Component Safety Information, Guide to Good Practice for Handling, Installing & Bracing of Metal Plate Connected Wood Trusses.

Numbering System

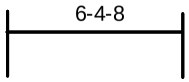

dimensions shown in ft-in-sixteenths
(Drawings not to scale)

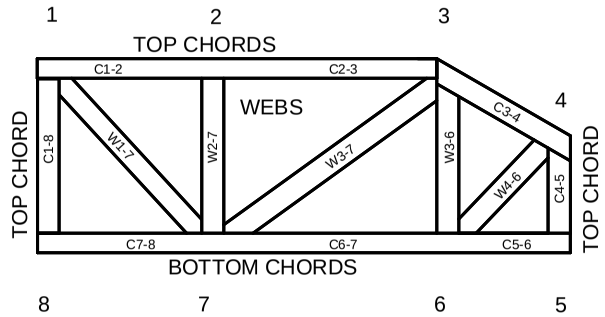

JOINTS ARE GENERALLY NUMBERED/LETTERED CLOCKWISE AROUND THE TRUSS STARTING AT THE JOINT FARTHEST TO THE LEFT.

CHORDS AND WEBS ARE IDENTIFIED BY END JOINT NUMBERS/LETTERS.

PRODUCT CODE APPROVALS

ICC-ES Reports:

ESR-1311, ESR-1352, ESR1988
ER-3907, ESR-2362, ESR-1397, ESR-3282

Trusses are designed for wind loads in the plane of the truss unless otherwise shown.

Lumber design values are in accordance with ANSI/TPI 1 section 6.3 These truss designs rely on lumber values established by others.

MiTek

ENGINEERING BY TRENCO
A MiTek Affiliate

General Safety Notes

Failure to Follow Could Cause Property Damage or Personal Injury

1. Additional stability bracing for truss system, e.g. diagonal or X-bracing, is always required. See BCSI.
2. Truss bracing must be designed by an engineer. For wide truss spacing, individual lateral braces themselves may require bracing, or alternative Tor I bracing should be considered.
3. Never exceed the design loading shown and never stack materials on inadequately braced trusses.
4. Provide copies of this truss design to the building designer, erection supervisor, property owner and all other interested parties.
5. Cut members to bear tightly against each other.
6. Place plates on each face of truss at each joint and embed fully. Knots and wane at joint locations are regulated by ANSI/TPI 1.
7. Design assumes trusses will be suitably protected from the environment in accord with ANSI/TPI 1.
8. Unless otherwise noted, moisture content of lumber shall not exceed 19% at time of fabrication.
9. Unless expressly noted, this design is not applicable for use with fire retardant, preservative treated, or green lumber.
10. Camber is a non-structural consideration and is the responsibility of truss fabricator. General practice is to camber for dead load deflection.
11. Plate type, size, orientation and location dimensions indicated are minimum plating requirements.
12. Lumber used shall be of the species and size, and in all respects, equal to or better than that specified.
13. Top chords must be sheathed or purlins provided at spacing indicated on design.
14. Bottom chords require lateral bracing at 10 ft. spacing, or less, if no ceiling is installed, unless otherwise noted.
15. Connections not shown are the responsibility of others.
16. Do not cut or alter truss member or plate without prior approval of an engineer.
17. Install and load vertically unless indicated otherwise.
18. Use of green or treated lumber may pose unacceptable environmental, health or performance risks. Consult with project engineer before use.
19. Review all portions of this design (front, back, words and pictures) before use. Reviewing pictures alone is not sufficient.
20. Design assumes manufacture in accordance with ANSI/TPI 1 Quality Criteria.
21. The design does not take into account any dynamic or other loads other than those expressly stated.