Products				
Net Qty	Plies	Product	Length	PlotID
2	2	1-3/4X9-1/4 LP-LVL 2900Fb-2.0E	3' 0"	DB3
2	2	1-3/4X11-7/8 LP-LVL 2900Fb-2.0E	34' 0"	DB34
2	2	1-3/4X11-7/8 LP-LVL 2900Fb-2.0E	21' 0"	DB21
2	2	1-3/4X14 LP-LVL 2900Fb-2.0E	6' 0"	FB5A
2	2	1-3/4X14 LP-LVL 2900Fb-2.0E	5' 0"	FB5
2	2	1-3/4X14 LP-LVL 2900Fb-2.0E	4' 0"	FB4
2	2	1-3/4X14 LP-LVL 2900Fb-2.0E	4' 0"	FB4A
3	3	1-3/4X20 LP-LVL 2900Fb-2.0E	22' 0"	FB22

Truss Connector Total List		
Qty	Product	Manuf
11	LUS410	Simpson
1	HGUS414*	Simpson
36	SDW22500*	Simpson

EXTERIOR DIMENSIONS ARE FACE OF SHEATHING
SHEATHING IS FLUSH TO FACE OF FOUNDATION

SHOP DRAWING APPROVAL

THIS LAYOUT IS THE SOLE SOURCE FOR FABRICATION OF TRUSSES AND VOIDS ALL PREVIOUS ARCHITECTURAL OR OTHER TRUSS LAYOUTS. REVIEW AND APPROVAL OF THIS LAYOUT MUST BE RECEIVED BEFORE ANY TRUSSES WILL BE BUILT. VERIFY ALL CONDITIONS TO INSURE AGAINST CHANGES THAT WILL RESULT IN EXTRA CHARGES TO YOU.

REVIEWED BY: APPROVED BY: DATE:

QUALITY AUDITED by: IBC 1704.2 IBC 2303.4 ANSI/TPI 1-2002 ANSI/TPI 1-2007 ANSI/TPI 1-2014 CAROLINA STRUCTURAL SYSTEMS, LLC Star, NC - Plant E30-437 910-491-9004

Carolina Structural Systems
Roof Trusses • Floor Trusses • EWP
Carolina Structural Systems
P.O. Box 157, Ether, NC 27247
225 Frame Shop Rd., Star, NC 27356
910-491-9004

THIS IS A TRUSS PLACEMENT DIAGRAM ONLY

These trusses are designed as individual building components to be incorporated into the building design at the specification of the building designer. See individual design sheets for each truss design identified on the placement drawing. The building designer is responsible for temporary and permanent bracing of the roof and floor system and for the overall structure. The design of the truss support structure including headers, beams, walls, and columns is the responsibility of the building designer. For general guidance regarding bracing, consult "Bracing of Wood Trusses" available from the Truss Plate Institute, 583 D'Onifrio Drive; Madison, WI 53179.

ROOF DATA

Roof Area: 2077.76 SF

Job #: Q2200858
Customer: GARMAN HOMES
Site Address:
City, ST, ZIP:

Plan: WISTERIA A&B FLOOR
Date: 2/10/2023
Sales Rep: RW
Designer: JSP

ENGINEERING BY TRENCO
A MiTek Affiliate

Trenco
818 Soundside Rd
Edenton, NC 27932

Re: Q2200858
Garman Homes - Wisteria A & B

The truss drawing(s) referenced below have been prepared by Truss Engineering Co. under my direct supervision based on the parameters provided by Carolina Structural Systems, LLC.

Pages or sheets covered by this seal: I54245348 thru I54245362

My license renewal date for the state of North Carolina is December 31, 2022.

North Carolina COA: C-0844

NORTH CAROLINA PROFESSIONAL SEAL 036322 ENGINEER ERIC A. GILBERT

September 16,2022

Gilbert, Eric

IMPORTANT NOTE: The seal on these truss component designs is a certification that the engineer named is licensed in the jurisdiction(s) identified and that the designs comply with ANSI/TPI 1. These designs are based upon parameters shown (e.g., loads, supports, dimensions, shapes and design codes), which were given to MiTek or TRENCO. Any project specific information included is for MiTek's or TRENCO's customers file reference purpose only, and was not taken into account in the preparation of these designs. MiTek or TRENCO has not independently verified the applicability of the design parameters or the designs for any particular building. Before use, the building designer should verify applicability of design parameters and properly incorporate these designs into the overall building design per ANSI/TPI 1, Chapter 2.

Job	Truss	Truss Type	Qty	Ply	Garman Homes - Wisteria A & B
Q2200858	A01	Piggyback Base Supported Gable	1	1	I54245348 Job Reference (optional)

Carolina Structural Systems, LLC, Ether, NC - 27247, Run: 8.43 S Jan 6 2022 Print: 8.430 S Jan 6 2022 MiTek Industries, Inc. Fri Sep 16 09:58:13 Page: 1
ID:qMA3ZbXBzG619xCEO6OmQizCmoV-RfC?PsB70Hq3NSgPqnL8w3uITXbGKWrCDoi7J4zJC?f

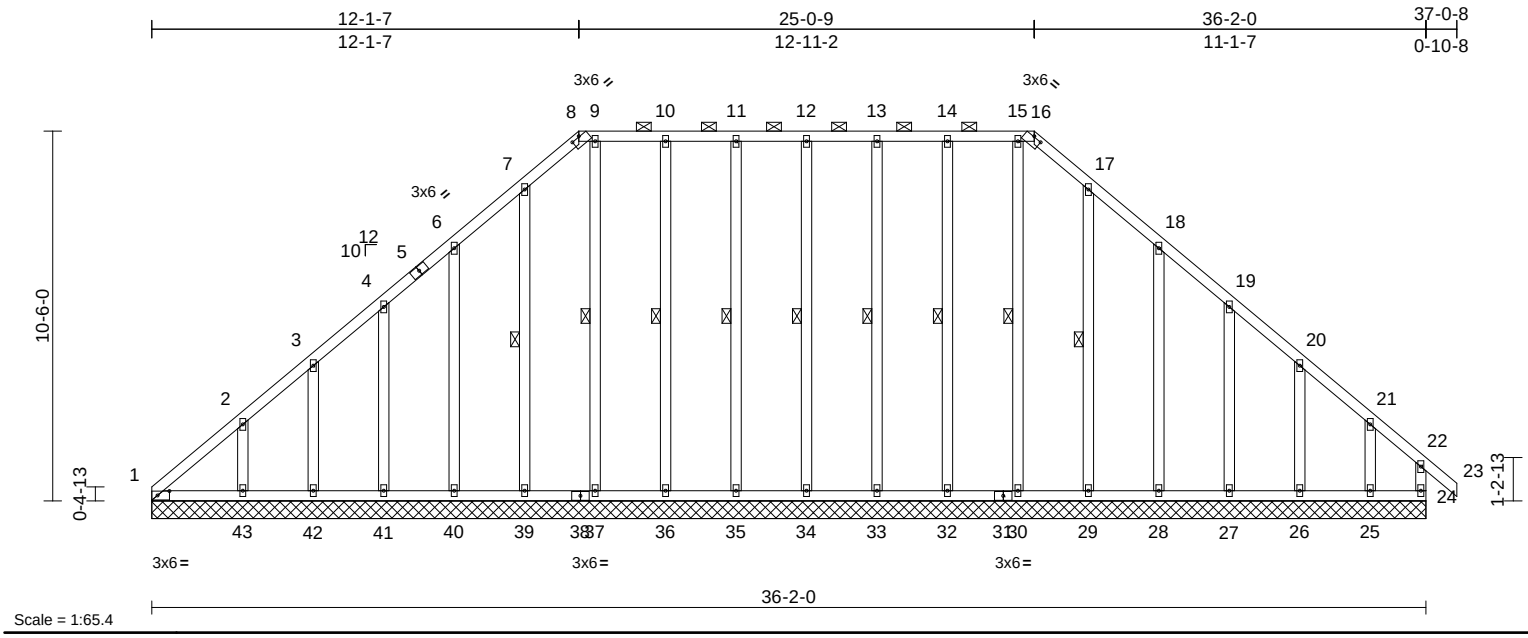

Scale = 1:65.4

Plate Offsets (X, Y): [1:0-4-1,0-1-8], [8:0-3-0,0-0-4], [16:0-3-0,0-0-4]

Loading	(psf)	Spacing	2-0-0	CSI		DEFL	in	(loc)	l/defl	L/d	PLATES	GRIP
TCLL (roof)	20.0	Plate Grip DOL	1.00	TC	0.10	Vert(LL)	n/a	-	n/a	999	MT20	244/190
TCDL	10.0	Lumber DOL	1.15	BC	0.10	Vert(CT)	n/a	-	n/a	999		
BCLL	0.0*	Rep Stress Incr	YES	WB	0.14	Horz(CT)	0.01	24	n/a	n/a		
BCDL	10.0	Code	IRC2015/TPI2014	Matrix-AS							Weight: 304 lb	FT = 20%

LUMBER

TOP CHORD 2x4 SP No.2
BOT CHORD 2x4 SP No.2
WEBS 2x4 SP No.2
OTHERS 2x4 SP No.3

BRACING

TOP CHORD Structural wood sheathing directly applied, except end verticals, and 2-0-0 oc purlins (6-0-0 max.): 8-16.
BOT CHORD Rigid ceiling directly applied.
WEBS 1 Row at midpt 12-34, 11-35, 10-36, 9-37, 7-39, 13-33, 14-32, 15-30, 17-29

REACTIONS (size) 1=36-2-0, 24=36-2-0, 25=36-2-0, 26=36-2-0, 27=36-2-0, 28=36-2-0, 29=36-2-0, 30=36-2-0, 32=36-2-0, 33=36-2-0, 34=36-2-0, 35=36-2-0, 36=36-2-0, 37=36-2-0, 39=36-2-0, 40=36-2-0, 41=36-2-0, 42=36-2-0, 43=36-2-0, 44=36-2-0
Max Horiz 1=213 (LC 11), 44=213 (LC 11)
Max Uplift 1=-69 (LC 10), 25=-100 (LC 12), 26=-25 (LC 12), 27=-36 (LC 12), 28=-45 (LC 12), 32=-10 (LC 12), 33=-1 (LC 12), 34=-1 (LC 12), 35=-1 (LC 12), 36=-10 (LC 12), 40=-45 (LC 12), 41=-35 (LC 12), 42=-31 (LC 12), 43=-51 (LC 12), 44=-69 (LC 10)
Max Grav 1=166 (LC 21), 24=151 (LC 20), 25=163 (LC 21), 26=170 (LC 21), 27=167 (LC 21), 28=172 (LC 21), 29=158 (LC 25), 30=156 (LC 25), 32=165 (LC 24), 33=160 (LC 25), 34=160 (LC 25), 35=160 (LC 24), 36=164 (LC 25), 37=168 (LC 20), 39=173 (LC 20), 40=166 (LC 20), 41=173 (LC 20), 42=147 (LC 20), 43=233 (LC 20), 44=166 (LC 21)

FORCES (lb) - Maximum Compression/Maximum Tension

TOP CHORD 1-2=-195/201, 2-3=-179/163, 3-4=-161/143, 4-6=-142/135, 6-7=-187/209, 7-8=-220/247, 8-9=-185/218, 9-10=-185/218, 10-11=-185/218, 11-12=-185/218, 12-13=-185/218, 13-14=-185/218, 14-15=-185/218, 15-16=-185/218, 16-17=-220/247, 17-18=-187/209, 18-19=-124/135, 19-20=-69/69, 20-21=-55/43, 21-22=-102/114, 22-23=0/39, 22-24=-125/58
BOT CHORD 1-43=-94/117, 42-43=-94/117, 41-42=-94/117, 40-41=-94/117, 39-40=-94/117, 37-39=-94/117, 36-37=-94/117, 35-36=-94/117, 34-35=-94/117, 33-34=-94/117, 32-33=-94/117, 30-32=-94/117, 29-30=-94/117, 28-29=-94/117, 27-28=-94/117, 26-27=-94/117, 25-26=-94/117, 24-25=-94/117
WEBS 12-34=-120/43, 11-35=-120/44, 10-36=-124/54, 9-37=-128/54, 7-39=-133/39, 6-40=-138/94, 4-41=-131/80, 3-42=-119/78, 2-43=-160/96, 13-33=-120/44, 14-32=-125/54, 15-30=-116/54, 17-29=-118/39, 18-28=-139/94, 19-27=-127/80, 20-26=-131/79, 21-25=-150/113

NOTES

1) Unbalanced roof live loads have been considered for this design.
2) Wind: ASCE 7-10; Vult=120mph (3-second gust) Vasd=95mph; TCDL=6.0psf; BCDL=6.0psf; h=25ft; B=45ft; L=36ft; eave=2ft; Cat. II; Exp B; Enclosed; MWFRS (directional) and C-C Corner (3) 0-0-0 to 3-7-6, Exterior (2) 3-7-6 to 12-1-7, Corner (3) 12-1-7 to 15-8-13, Exterior (2) 15-8-13 to 25-0-9, Corner (3) 25-0-9 to 28-7-0, Exterior (2) 28-7-0 to 37-0-8 zone; cantilever left and right exposed ; end vertical left and right exposed;C-C for members and forces & MWFRS for reactions shown; Lumber DOL=1.60 plate grip DOL=1.60
3) Truss designed for wind loads in the plane of the truss only. For studs exposed to wind (normal to the face), see Standard Industry Gable End Details as applicable, or consult qualified building designer as per ANSI/TPI 1.
4) Provide adequate drainage to prevent water ponding.
5) All plates are 2x4 MT20 unless otherwise indicated.
6) Gable requires continuous bottom chord bearing.
7) Gable studs spaced at 2-0-0 oc.

September 16,2022

Continued on page 2

ENGINEERING BY TRENCO A MiTek Affiliate
818 Soundside Road
Edenton, NC 27932

8) This truss has been designed for a 10.0 psf bottom chord live load nonconcurrent with any other live loads.
9) * This truss has been designed for a live load of 20.0psf on the bottom chord in all areas where a rectangle 3-06-00 tall by 2-00-00 wide will fit between the bottom chord and any other members.
10) Provide mechanical connection (by others) of truss to bearing plate capable of withstanding 69 lb uplift at joint 1, 1 lb uplift at joint 34, 1 lb uplift at joint 35, 10 lb uplift at joint 36, 45 lb uplift at joint 40, 35 lb uplift at joint 41, 31 lb uplift at joint 42, 51 lb uplift at joint 43, 1 lb uplift at joint 33, 10 lb uplift at joint 32, 45 lb uplift at joint 28, 36 lb uplift at joint 27, 25 lb uplift at joint 26, 100 lb uplift at joint 25 and 69 lb uplift at joint 1.
11) This truss is designed in accordance with the 2015 International Residential Code sections R502.11.1 and R802.10.2 and referenced standard ANSI/TPI 1.
12) This truss design requires that a minimum of 7/16" structural wood sheathing be applied directly to the top chord and 1/2" gypsum sheetrock be applied directly to the bottom chord.
13) Graphical purlin representation does not depict the size or the orientation of the purlin along the top and/or bottom chord.

LOAD CASE(S) Standard

Job	Truss	Truss Type	Qty	Ply	Garman Homes - Wisteria A & B
Q2200858	F201	Floor	5	1	I54245349 Job Reference (optional)

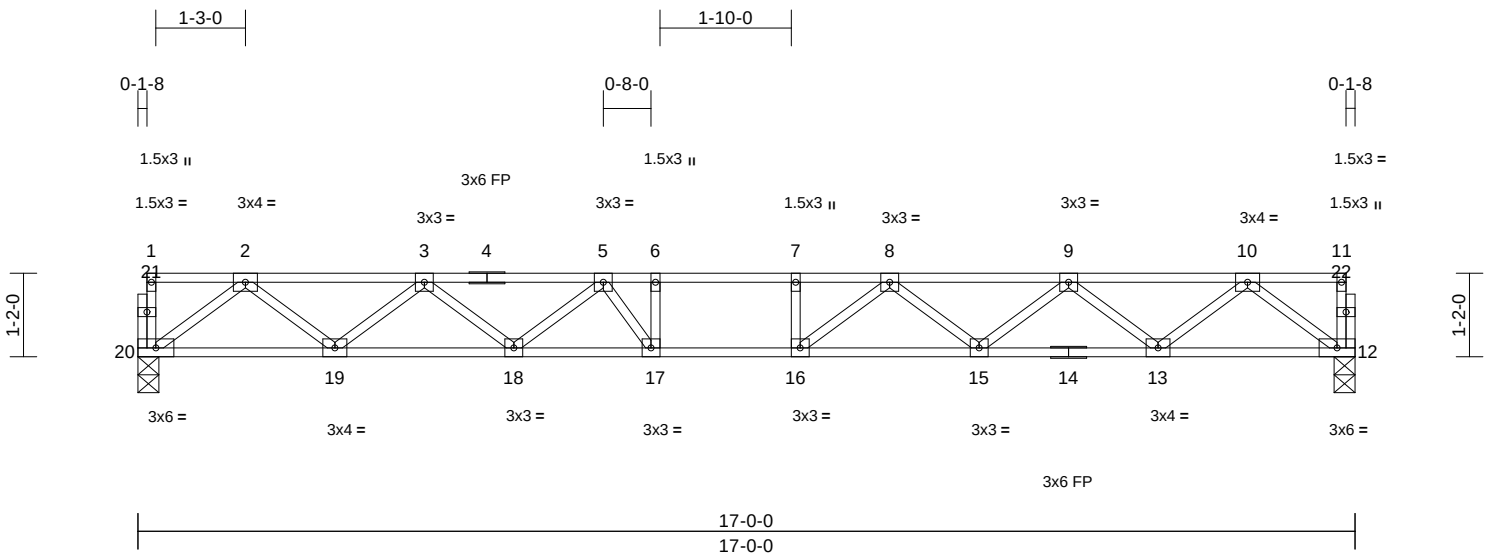

Scale = 1:32.2

Loading	(psf)	Spacing	1-7-3	CSI		DEFL	in	(loc)	l/defl	L/d	PLATES	GRIP
TCLL	40.0	Plate Grip DOL	1.00	TC	0.55	Vert(LL)	-0.22	16	>925	480	MT20	244/190
TCDL	10.0	Lumber DOL	1.00	BC	0.89	Vert(CT)	-0.30	16	>672	240		
BCLL	0.0	Rep Stress Incr	YES	WB	0.39	Horz(CT)	0.06	12	n/a	n/a		
BCDL	5.0	Code	IRC2015/TPI2014	Matrix-S							Weight: 85 lb	FT = 20%F, 11%E

LUMBER
TOP CHORD 2x4 SP No.2(flat)
BOT CHORD 2x4 SP No.2(flat)
WEBS 2x4 SP No.3(flat)
OTHERS 2x4 SP No.3(flat)

BRACING
TOP CHORD Structural wood sheathing directly applied or 6-0-0 oc purlins, except end verticals.
BOT CHORD Rigid ceiling directly applied or 10-0-0 oc bracing.

REACTIONS (size) 12=0-3-8, 20=0-3-8
Max Grav 12=732 (LC 1), 20=732 (LC 1)

FORCES (lb) - Maximum Compression/Maximum Tension
TOP CHORD 1-20=-31/0, 11-12=-31/0, 1-2=-2/0, 2-3=-1540/0, 3-5=-2479/0, 5-6=-2924/0, 6-7=-2924/0, 7-8=-2924/0, 8-9=-2486/0, 9-10=-1539/0, 10-11=-2/0
BOT CHORD 19-20=0/913, 18-19=0/2138, 17-18=0/2808, 16-17=0/2924, 15-16=0/2802, 13-15=0/2139, 12-13=0/913
WEBS 10-12=-1143/0, 2-20=-1143/0, 10-13=0/815, 2-19=0/816, 9-13=-782/0, 3-19=-778/0, 9-15=0/451, 3-18=0/443, 8-15=-411/0, 5-18=-429/0, 8-16=-102/422, 7-16=-194/12, 6-17=-298/42, 5-17=-102/476

NOTES
1) Unbalanced floor live loads have been considered for this design.
2) All plates are 3x3 MT20 unless otherwise indicated.
3) This truss is designed in accordance with the 2015 International Residential Code sections R502.11.1 and R802.10.2 and referenced standard ANSI/TPI 1.
4) Recommend 2x6 strongbacks, on edge, spaced at 10-00-00 oc and fastened to each truss with 3-10d (0.131" X 3") nails. Strongbacks to be attached to walls at their outer ends or restrained by other means.

LOAD CASE(S) Standard

September 16,2022

ENGINEERING BY TRENCO A MiTek Affiliate
818 Soundside Road
Edenton, NC 27932

Job	Truss	Truss Type	Qty	Ply	Garman Homes - Wisteria A & B
Q2200858	F202	Floor	3	1	I54245350 Job Reference (optional)

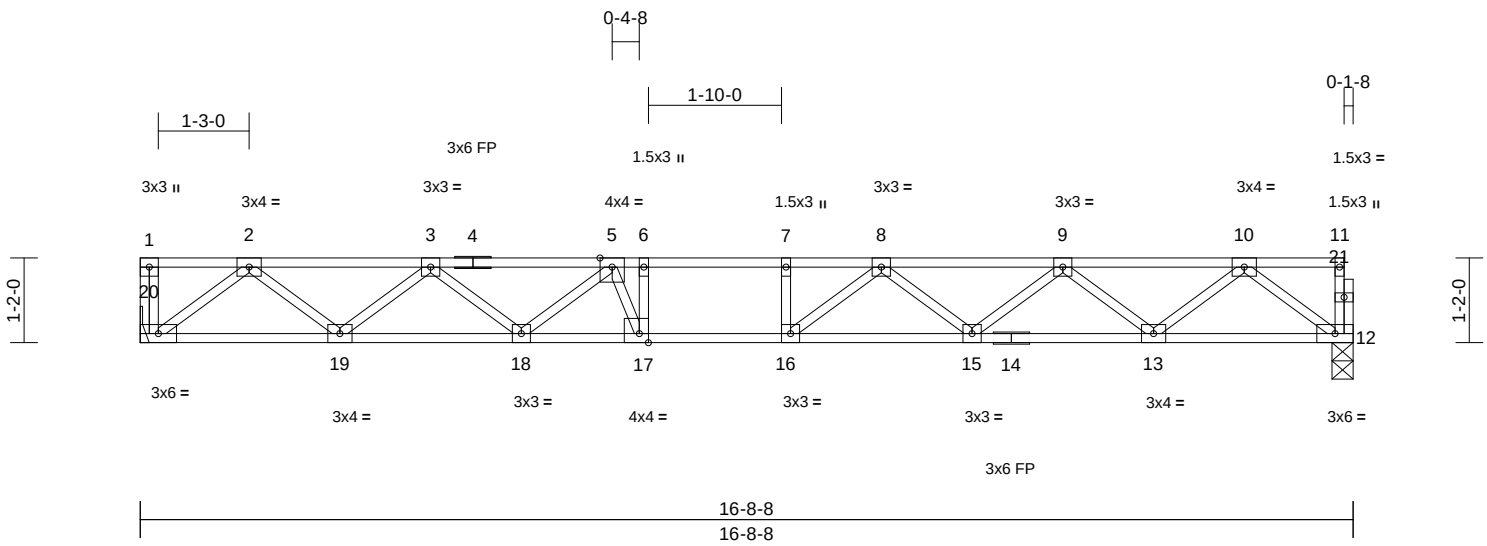

Scale = 1:31.7

Plate Offsets (X, Y): [17:0-1-8,Edge]

Loading	(psf)	Spacing	1-7-3	CSI		DEFL	in	(loc)	l/defl	L/d	PLATES	GRIP
TCLL	40.0	Plate Grip DOL	1.00	TC	0.69	Vert(LL)	-0.21	15-16	>953	480	MT20	244/190
TCDL	10.0	Lumber DOL	1.00	BC	0.87	Vert(CT)	-0.29	15-16	>691	240		
BCLL	0.0	Rep Stress Incr	YES	WB	0.38	Horz(CT)	0.05	12	n/a	n/a		
BCDL	5.0	Code	IRC2015/TPI2014	Matrix-S							Weight: 84 lb	FT = 20%F, 11%E

LUMBER
TOP CHORD 2x4 SP No.2(flat)
BOT CHORD 2x4 SP No.2(flat)
WEBS 2x4 SP No.3(flat)
OTHERS 2x4 SP No.3(flat)

BRACING
TOP CHORD Structural wood sheathing directly applied or 6-0-0 oc purlins, except end verticals.
BOT CHORD Rigid ceiling directly applied or 10-0-0 oc bracing.

REACTIONS (size) 12=0-3-8, 20= Mechanical
Max Grav 12=719 (LC 1), 20=724 (LC 1)

FORCES (lb) - Maximum Compression/Maximum Tension
TOP CHORD 1-20=-34/0, 11-12=-31/0, 1-2=0/0, 2-3=-1508/0, 3-5=-2416/0, 5-6=-2820/0, 6-7=-2820/0, 7-8=-2820/0, 8-9=-2424/0, 9-10=-1506/0, 10-11=-2/0
BOT CHORD 19-20=0/898, 18-19=0/2089, 17-18=0/2739, 16-17=0/2820, 15-16=0/2723, 13-15=0/2092, 12-13=0/896
WEBS 10-12=-1122/0, 2-20=-1126/0, 10-13=0/794, 2-19=0/795, 9-13=-763/0, 3-19=-756/0, 9-15=0/433, 3-18=0/425, 8-15=-389/0, 5-18=-436/0, 8-16=-116/391, 7-16=-181/19, 6-17=-401/95, 5-17=-148/542

LOAD CASE(S) Standard

NOTES
1) Unbalanced floor live loads have been considered for this design.
2) Refer to girder(s) for truss to truss connections.
3) This truss is designed in accordance with the 2015 International Residential Code sections R502.11.1 and R802.10.2 and referenced standard ANSI/TPI 1.
4) Recommend 2x6 strongbacks, on edge, spaced at 10-00-00 oc and fastened to each truss with 3-10d (0.131" X 3") nails. Strongbacks to be attached to walls at their outer ends or restrained by other means.
5) CAUTION, Do not erect truss backwards.

September 16,2022

ENGINEERING BY TRENCO A MiTek Affiliate
818 Soundside Road
Edenton, NC 27932

Job	Truss	Truss Type	Qty	Ply	Garman Homes - Wisteria A & B
Q2200858	F203	Floor	7	1	I54245351 Job Reference (optional)

Carolina Structural Systems, LLC, Ether, NC - 27247, Run: 8.43 S Jan 6 2022 Print: 8.430 S Jan 6 2022 MiTek Industries, Inc. Fri Sep 16 09:58:15 Page: 1
ID:EQvekYNvrtzFbjnP4imPHNzCmwS-RfC?PsB70Hq3NSgPqnL8w3uITXbGKWrCDoi7J4zJC?f

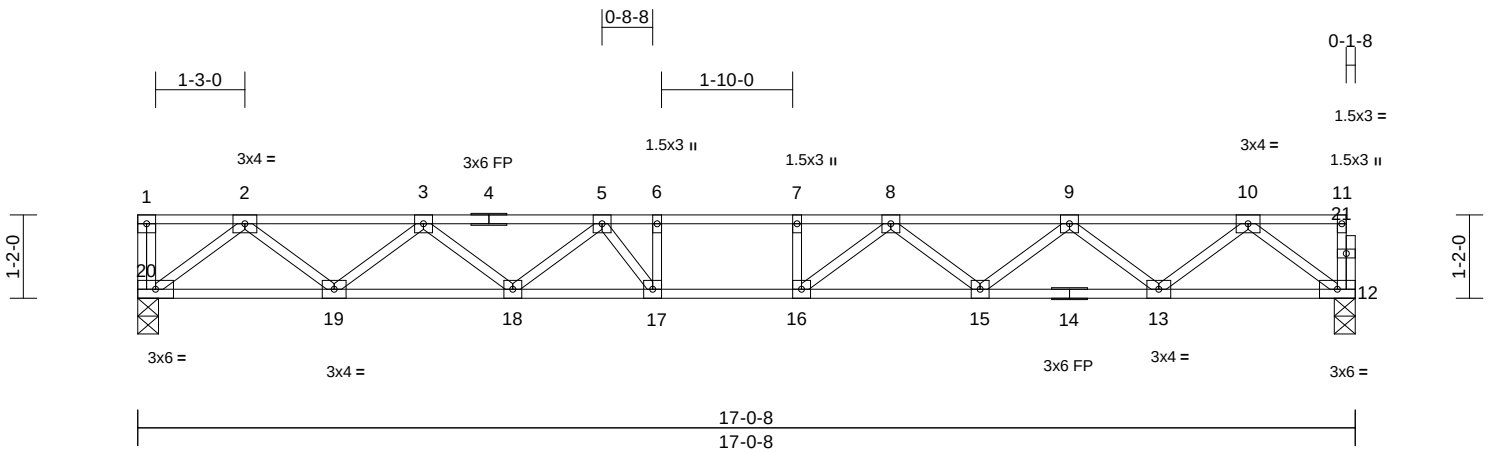

Scale = 1:32.2

Loading	(psf)	Spacing	1-7-3	CSI		DEFL	in	(loc)	l/defl	L/d	PLATES	GRIP
TCLL	40.0	Plate Grip DOL	1.00	TC	0.55	Vert(LL)	-0.22	16	>922	480	MT20	244/190
TCDL	10.0	Lumber DOL	1.00	BC	0.89	Vert(CT)	-0.30	16	>669	240		
BCLL	0.0	Rep Stress Incr	YES	WB	0.39	Horz(CT)	0.06	12	n/a	n/a		
BCDL	5.0	Code	IRC2015/TPI2014	Matrix-S							Weight: 85 lb	FT = 20%F, 11%E

LUMBER
TOP CHORD 2x4 SP No.2(flat)
BOT CHORD 2x4 SP No.2(flat)
WEBS 2x4 SP No.3(flat)
OTHERS 2x4 SP No.3(flat)

BRACING
TOP CHORD Structural wood sheathing directly applied or 6-0-0 oc purlins, except end verticals.
BOT CHORD Rigid ceiling directly applied or 10-0-0 oc bracing.

REACTIONS (size) 12=0-3-8, 20=0-3-8
Max Grav 12=733 (LC 1), 20=738 (LC 1)

FORCES (lb) - Maximum Compression/Maximum Tension
TOP CHORD 1-20=-34/0, 11-12=-31/0, 1-2=0/0, 2-3=-1545/0, 3-5=-2488/0, 5-6=-2939/0, 6-7=-2939/0, 7-8=-2939/0, 8-9=-2495/0, 9-10=-1543/0, 10-11=-2/0
BOT CHORD 19-20=0/916, 18-19=0/2145, 17-18=0/2819, 16-17=0/2939, 15-16=0/2813, 13-15=0/2146, 12-13=0/915
WEBS 10-12=-1146/0, 2-20=-1150/0, 10-13=0/817, 2-19=0/819, 9-13=-785/0, 3-19=-781/0, 9-15=0/453, 3-18=0/446, 8-15=-414/0, 5-18=-430/0, 8-16=-100/427, 7-16=-196/11, 6-17=-289/37, 5-17=-99/473

NOTES
1) Unbalanced floor live loads have been considered for this design.
2) All plates are 3x3 MT20 unless otherwise indicated.
3) This truss is designed in accordance with the 2015 International Residential Code sections R502.11.1 and R802.10.2 and referenced standard ANSI/TPI 1.
4) Recommend 2x6 strongbacks, on edge, spaced at 10-00-00 oc and fastened to each truss with 3-10d (0.131" X 3") nails. Strongbacks to be attached to walls at their outer ends or restrained by other means.
5) CAUTION, Do not erect truss backwards.

LOAD CASE(S) Standard

September 16,2022

ENGINEERING BY TRENCO A MiTek Affiliate
818 Soundside Road
Edenton, NC 27932

Job	Truss	Truss Type	Qty	Ply	Garman Homes - Wisteria A & B
Q2200858	F204	Floor	7	1	I54245352 Job Reference (optional)

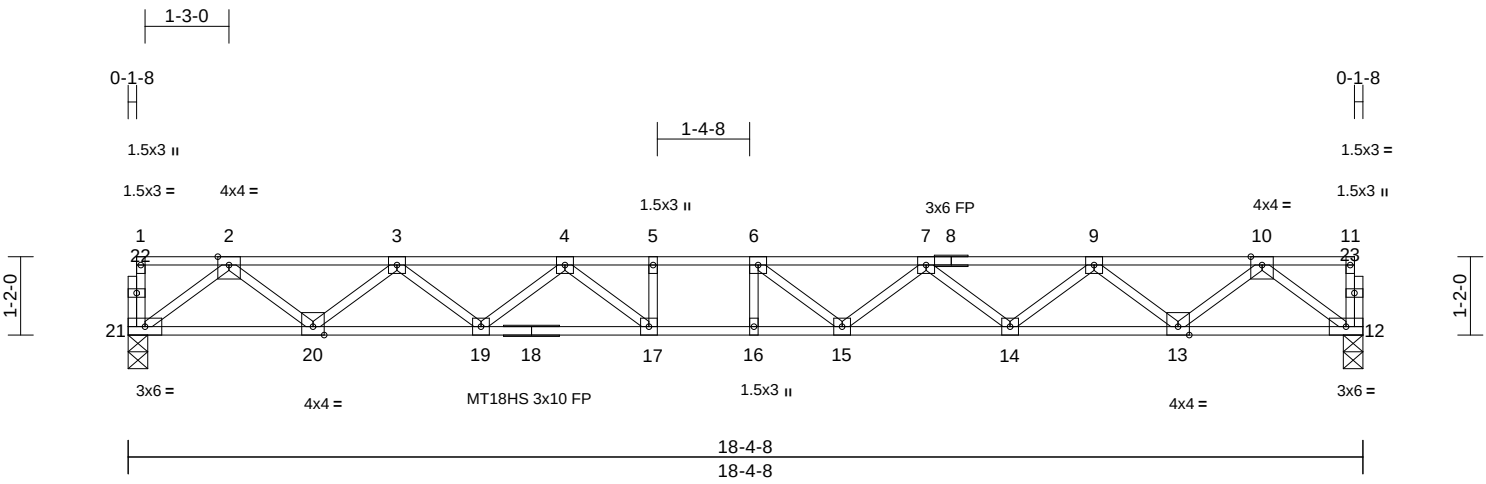

Scale = 1:34.3

Loading	(psf)	Spacing	1-7-3	CSI		DEFL	in	(loc)	l/defl	L/d	PLATES	GRIP
TCLL	40.0	Plate Grip DOL	1.00	TC	0.60	Vert(LL)	-0.29	15-16	>755	480	MT18HS	244/190
TCDL	10.0	Lumber DOL	1.00	BC	0.87	Vert(CT)	-0.39	15-16	>551	240	MT20	244/190
BCLL	0.0	Rep Stress Incr	YES	WB	0.43	Horz(CT)	0.06	12	n/a	n/a		
BCDL	5.0	Code	IRC2015/TPI2014	Matrix-S							Weight: 92 lb	FT = 20%F, 11%E

LUMBER
TOP CHORD 2x4 SP No.2(flat)
BOT CHORD 2x4 SP No.2(flat) *Except* 18-12:2x4 SP No.1(flat)
WEBS 2x4 SP No.3(flat)
OTHERS 2x4 SP No.2(flat)

BRACING
TOP CHORD Structural wood sheathing directly applied or 5-10-1 oc purlins, except end verticals.
BOT CHORD Rigid ceiling directly applied or 10-0-0 oc bracing.

REACTIONS (size) 12=0-3-8, 21=0-3-8
Max Grav 12=792 (LC 1), 21=792 (LC 1)

FORCES (lb) - Maximum Compression/Maximum Tension
TOP CHORD 1-21=-32/0, 11-12=-30/0, 1-2=-2/0, 2-3=-1693/0, 3-4=-2772/0, 4-5=-3429/0, 5-6=-3429/0, 6-7=-3339/0, 7-9=-2784/0, 9-10=-1689/0, 10-11=-2/0
BOT CHORD 20-21=0/993, 19-20=0/2361, 17-19=0/3177, 16-17=0/3429, 15-16=0/3429, 14-15=0/3194, 13-14=0/2357, 12-13=0/994
WEBS 10-12=-1245/0, 2-21=-1243/0, 10-13=0/905, 2-20=0/911, 9-13=-868/0, 3-20=-870/0, 9-14=0/557, 3-19=0/534, 7-14=-533/0, 4-19=-528/0, 7-15=0/317, 4-17=-30/538, 6-15=-360/146, 5-17=-192/0, 6-16=-161/87

LOAD CASE(S) Standard

NOTES
1) Unbalanced floor live loads have been considered for this design.
2) All plates are MT20 plates unless otherwise indicated.
3) All plates are 3x3 MT20 unless otherwise indicated.
4) This truss is designed in accordance with the 2015 International Residential Code sections R502.11.1 and R802.10.2 and referenced standard ANSI/TPI 1.
5) Recommend 2x6 strongbacks, on edge, spaced at 10-00-00 oc and fastened to each truss with 3-10d (0.131" X 3") nails. Strongbacks to be attached to walls at their outer ends or restrained by other means.

September 16,2022

ENGINEERING BY TRENCO A MiTek Affiliate
818 Soundside Road
Edenton, NC 27932

Job	Truss	Truss Type	Qty	Ply	Garman Homes - Wisteria A & B
Q2200858	F205	Floor	2	1	I54245353 Job Reference (optional)

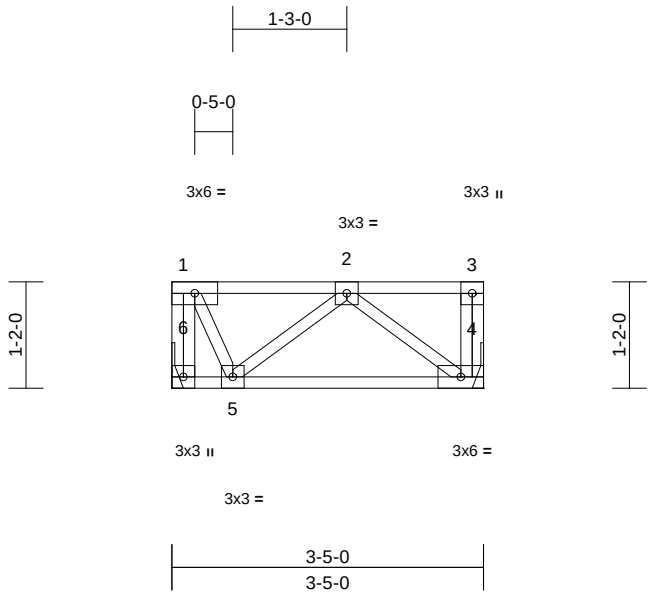

Scale = 1:25.3

Loading	(psf)	Spacing	1-7-3	CSI		DEFL	in	(loc)	l/defl	L/d	PLATES	GRIP
TCLL	40.0	Plate Grip DOL	1.00	TC	0.15	Vert(LL)	0.00	4-5	>999	480	MT20	244/190
TCDL	10.0	Lumber DOL	1.00	BC	0.07	Vert(CT)	0.00	4-5	>999	240		
BCLL	0.0	Rep Stress Incr	NO	WB	0.05	Horz(CT)	0.00	4	n/a	n/a		
BCDL	5.0	Code	IRC2015/TPI2014	Matrix-P							Weight: 22 lb	FT = 20%F, 11%E

LUMBER
TOP CHORD 2x4 SP No.2(flat)
BOT CHORD 2x4 SP No.2(flat)
WEBS 2x4 SP No.3(flat)

BRACING
TOP CHORD Structural wood sheathing directly applied or 3-5-0 oc purlins, except end verticals.
BOT CHORD Rigid ceiling directly applied or 10-0-0 oc bracing.

REACTIONS (size) 4= Mechanical, 6= Mechanical
Max Grav 4=139 (LC 1), 6=139 (LC 1)

FORCES (lb) - Maximum Compression/Maximum Tension
TOP CHORD 1-6=-146/0, 3-4=-37/0, 1-2=-46/0, 2-3=0/0
BOT CHORD 5-6=0/0, 4-5=0/124
WEBS 2-4=-156/0, 2-5=-102/0, 1-5=0/100

NOTES
1) Refer to girder(s) for truss to truss connections.
2) This truss is designed in accordance with the 2015 International Residential Code sections R502.11.1 and R802.10.2 and referenced standard ANSI/TPI 1.
3) Recommend 2x6 strongbacks, on edge, spaced at 10-00-00 oc and fastened to each truss with 3-10d (0.131" X 3") nails. Strongbacks to be attached to walls at their outer ends or restrained by other means.

LOAD CASE(S) Standard

September 16,2022

ENGINEERING BY TRENCO A MiTek Affiliate
818 Soundside Road
Edenton, NC 27932

Job	Truss	Truss Type	Qty	Ply	Garman Homes - Wisteria A & B
Q2200858	F206	Floor	2	1	I54245354 Job Reference (optional)

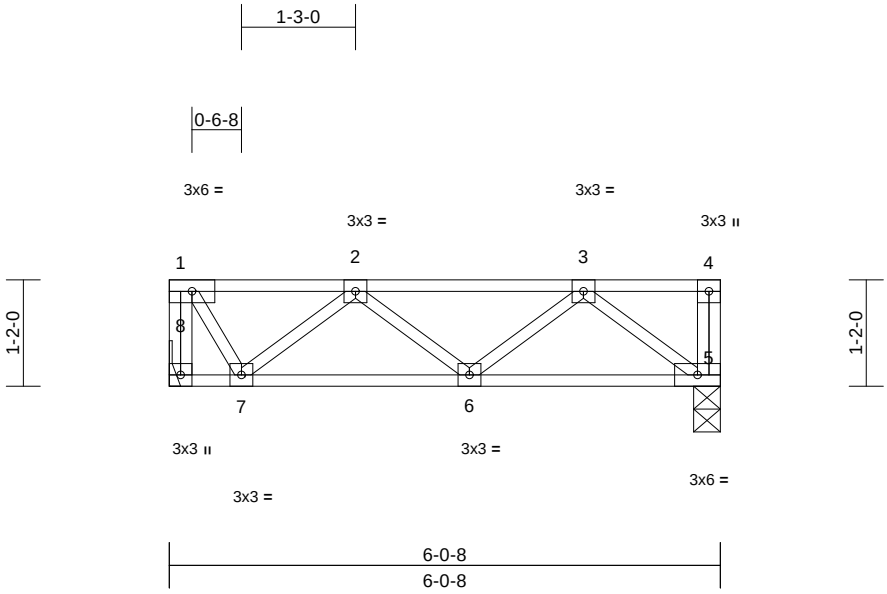

Scale = 1:25.3

Loading	(psf)	Spacing	1-7-3	CSI		DEFL	in	(loc)	l/defl	L/d	PLATES	GRIP
TCLL	40.0	Plate Grip DOL	1.00	TC	0.21	Vert(LL)	0.00	6	>999	480	MT20	244/190
TCDL	10.0	Lumber DOL	1.00	BC	0.11	Vert(CT)	-0.01	5-6	>999	240		
BCLL	0.0	Rep Stress Incr	YES	WB	0.11	Horz(CT)	0.00	5	n/a	n/a		
BCDL	5.0	Code	IRC2015/TPI2014	Matrix-P							Weight: 34 lb	FT = 20%F, 11%E

LUMBER
TOP CHORD 2x4 SP No.2(flat)
BOT CHORD 2x4 SP No.2(flat)
WEBS 2x4 SP No.3(flat)

BRACING
TOP CHORD Structural wood sheathing directly applied or 6-0-0 oc purlins, except end verticals.
BOT CHORD Rigid ceiling directly applied or 10-0-0 oc bracing.

REACTIONS (size) 5=0-3-8, 8= Mechanical
Max Grav 5=255 (LC 1), 8=255 (LC 1)

FORCES (lb) - Maximum Compression/Maximum Tension
TOP CHORD 1-8=-255/0, 4-5=-32/0, 1-2=-128/0, 2-3=-330/0, 3-4=0/0
BOT CHORD 7-8=0/0, 6-7=0/349, 5-6=0/283
WEBS 3-5=-355/0, 3-6=0/61, 2-6=-25/0, 2-7=-289/0, 1-7=0/237

NOTES
1) Refer to girder(s) for truss to truss connections.
2) This truss is designed in accordance with the 2015 International Residential Code sections R502.11.1 and R802.10.2 and referenced standard ANSI/TPI 1.
3) Recommend 2x6 strongbacks, on edge, spaced at 10-00-00 oc and fastened to each truss with 3-10d (0.131" X 3") nails. Strongbacks to be attached to walls at their outer ends or restrained by other means.

LOAD CASE(S) Standard

September 16,2022

ENGINEERING BY TRENCO A MiTek Affiliate
818 Soundside Road
Edenton, NC 27932

Job	Truss	Truss Type	Qty	Ply	Garman Homes - Wisteria A & B
Q2200858	F207	Floor	8	1	I54245355 Job Reference (optional)

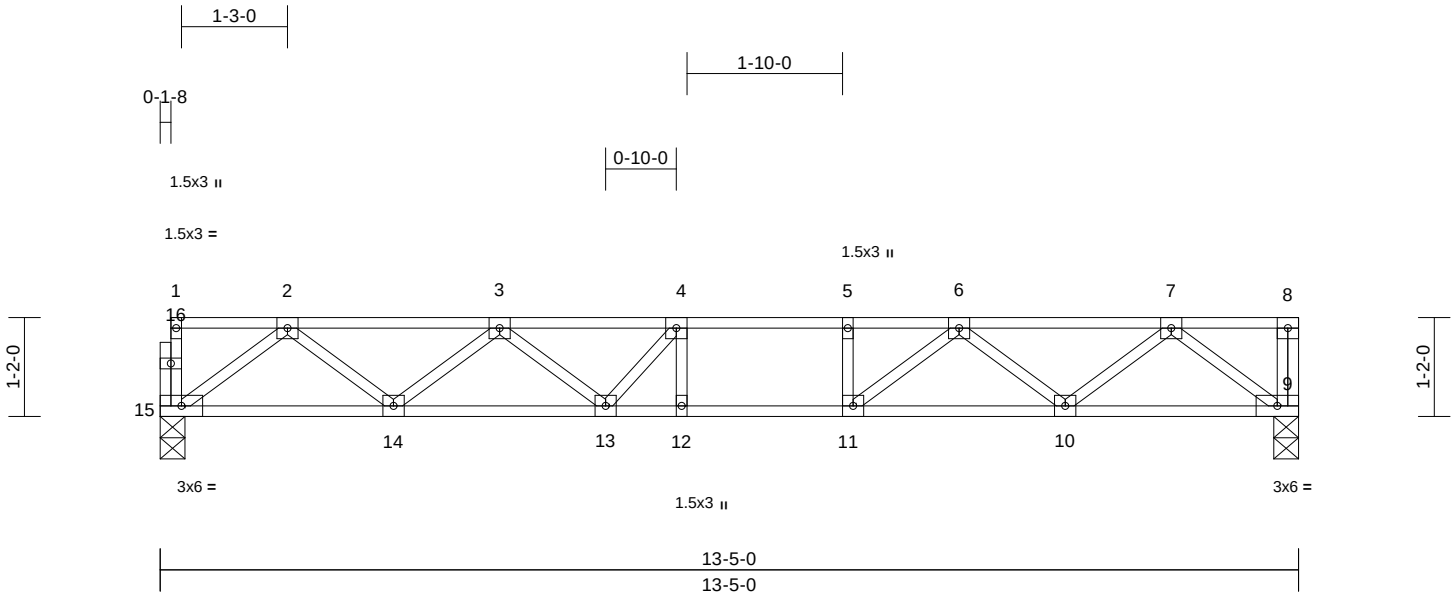

Scale = 1:27.2

Loading	(psf)	Spacing	1-7-3	CSI		DEFL	in	(loc)	l/defl	L/d	PLATES	GRIP
TCLL	40.0	Plate Grip DOL	1.00	TC	0.42	Vert(LL)	-0.10	12-13	>999	480	MT20	244/190
TCDL	10.0	Lumber DOL	1.00	BC	0.77	Vert(CT)	-0.14	12-13	>999	240		
BCLL	0.0	Rep Stress Incr	YES	WB	0.27	Horz(CT)	0.03	9	n/a	n/a		
BCDL	5.0	Code	IRC2015/TPI2014	Matrix-S							Weight: 68 lb	FT = 20%F, 11%E

LUMBER

TOP CHORD 2x4 SP No.2(flat)
BOT CHORD 2x4 SP No.2(flat)
WEBS 2x4 SP No.3(flat)
OTHERS 2x4 SP No.3(flat)

BRACING

TOP CHORD Structural wood sheathing directly applied or 6-0-0 oc purlins, except end verticals.
BOT CHORD Rigid ceiling directly applied or 10-0-0 oc bracing.

REACTIONS (size) 9=0-3-8, 15=0-3-8
Max Grav 9=579 (LC 1), 15=574 (LC 1)

FORCES (lb) - Maximum Compression/Maximum Tension
TOP CHORD 1-15=-31/0, 8-9=-31/0, 1-2=-2/0, 2-3=-1143/0, 3-4=-1716/0, 4-5=-1793/0, 5-6=-1793/0, 6-7=-1135/0, 7-8=0/0
BOT CHORD 14-15=0/707, 13-14=0/1553, 12-13=0/1793, 11-12=0/1793, 10-11=0/1543, 9-10=0/711
WEBS 7-9=-891/0, 2-15=-885/0, 7-10=0/552, 2-14=0/567, 6-10=-532/0, 3-14=-534/0, 6-11=0/461, 3-13=0/292, 5-11=-192/0, 4-12=-125/73, 4-13=-282/52

NOTES

1) Unbalanced floor live loads have been considered for this design.
2) All plates are 3x3 MT20 unless otherwise indicated.
3) This truss is designed in accordance with the 2015 International Residential Code sections R502.11.1 and R802.10.2 and referenced standard ANSI/TPI 1.
4) Recommend 2x6 strongbacks, on edge, spaced at 10-00-00 oc and fastened to each truss with 3-10d (0.131" X 3") nails. Strongbacks to be attached to walls at their outer ends or restrained by other means.
5) CAUTION, Do not erect truss backwards.

LOAD CASE(S) Standard

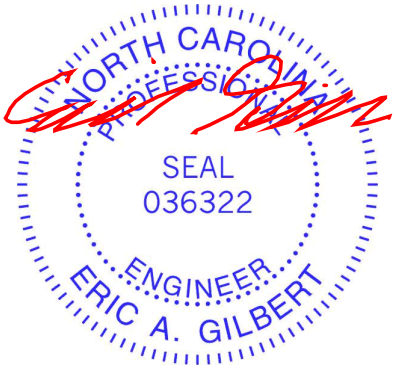

September 16,2022

ENGINEERING BY TRENCO A MiTek Affiliate
818 Soundside Road
Edenton, NC 27932

Job	Truss	Truss Type	Qty	Ply	Garman Homes - Wisteria A & B
Q2200858	F208	Floor	11	1	I54245356 Job Reference (optional)

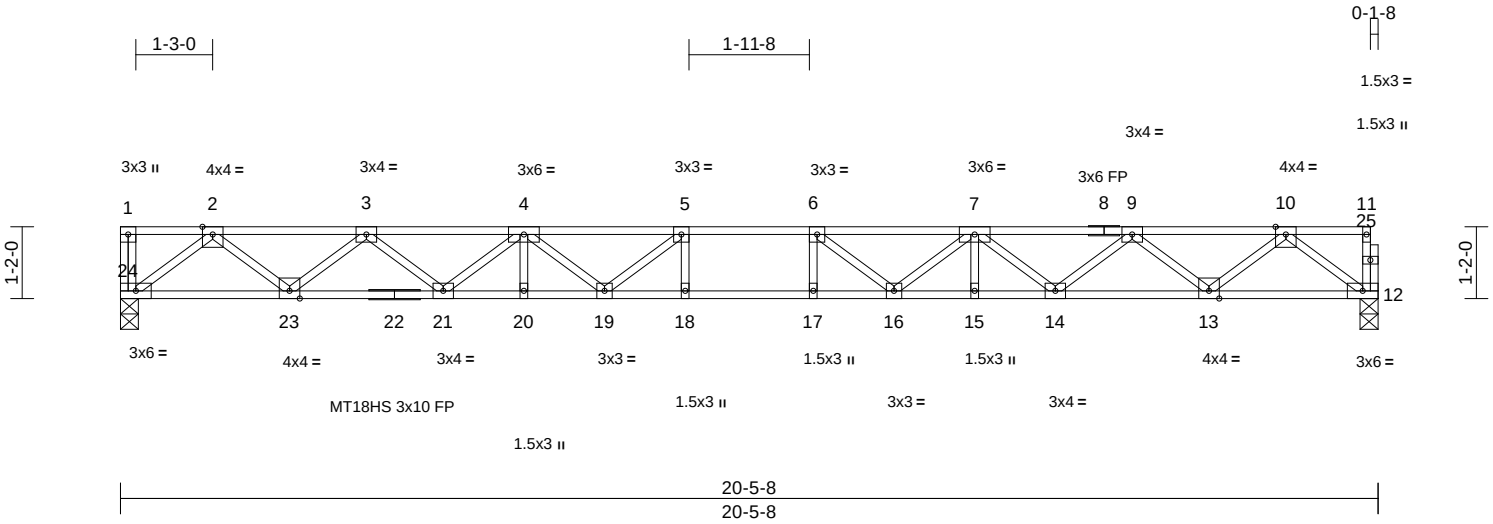

Scale = 1:37.5

Loading	(psf)	Spacing	1-7-3	CSI		DEFL	in	(loc)	l/defl	L/d	PLATES	GRIP
TCLL	40.0	Plate Grip DOL	1.00	TC	0.70	Vert(LL)	-0.41	17-18	>588	480	MT18HS	244/190
TCDL	10.0	Lumber DOL	1.00	BC	1.00	Vert(CT)	-0.57	17-18	>427	240	MT20	244/190
BCLL	0.0	Rep Stress Incr	YES	WB	0.50	Horz(CT)	0.09	12	n/a	n/a		
BCDL	5.0	Code	IRC2015/TPI2014	Matrix-S							Weight: 104 lb	FT = 20%F, 11%E

LUMBER
TOP CHORD 2x4 SP No.2(flat)
BOT CHORD 2x4 SP No.2(flat) *Except* 22-12:2x4 SP No.1(flat)
WEBS 2x4 SP No.3(flat)
OTHERS 2x4 SP No.3(flat)

BRACING
TOP CHORD Structural wood sheathing directly applied or 5-0-13 oc purlins, except end verticals.
BOT CHORD Rigid ceiling directly applied or 10-0-0 oc bracing, Except:
2-2-0 oc bracing: 18-19,16-17
1-4-12 oc bracing: 17-18.

REACTIONS (size) 12=0-3-8, 24=0-3-8
Max Grav 12=884 (LC 1), 24=889 (LC 1)

FORCES (lb) - Maximum Compression/Maximum Tension
TOP CHORD 1-24=-34/0, 11-12=-31/0, 1-2=0/0, 2-3=-1921/0, 3-4=-3230/0, 4-5=-4030/0, 5-6=-4280/0, 6-7=-4030/0, 7-9=-3230/0, 9-10=-1920/0, 10-11=-2/0
BOT CHORD 23-24=0/1115, 21-23=0/2698, 20-21=0/3769, 19-20=0/3769, 18-19=0/4280, 17-18=0/4280, 16-17=0/4280, 15-16=0/3769, 14-15=0/3769, 13-14=0/2698, 12-13=0/1114
WEBS 10-12=-1395/0, 2-24=-1398/0, 10-13=0/1049, 2-23=0/1049, 9-13=-1013/0, 3-23=-1012/0, 9-14=0/692, 3-21=0/692, 7-14=-689/0, 7-15=-20/39, 4-21=-689/0, 4-20=-20/39, 7-16=0/422, 4-19=0/422, 6-16=-590/71, 5-19=-590/71, 5-18=-164/193, 6-17=-164/193

NOTES
1) Unbalanced floor live loads have been considered for this design.
2) All plates are MT20 plates unless otherwise indicated.
3) This truss is designed in accordance with the 2015 International Residential Code sections R502.11.1 and R802.10.2 and referenced standard ANSI/TPI 1.
4) Recommend 2x6 strongbacks, on edge, spaced at 10-00-00 oc and fastened to each truss with 3-10d (0.131" X 3") nails. Strongbacks to be attached to walls at their outer ends or restrained by other means.
5) CAUTION, Do not erect truss backwards.

LOAD CASE(S) Standard

September 16,2022

ENGINEERING BY TRENCO A MiTek Affiliate
818 Soundside Road
Edenton, NC 27932

Job	Truss	Truss Type	Qty	Ply	Garman Homes - Wisteria A & B
Q2200858	F209	Floor	2	1	I54245357 Job Reference (optional)

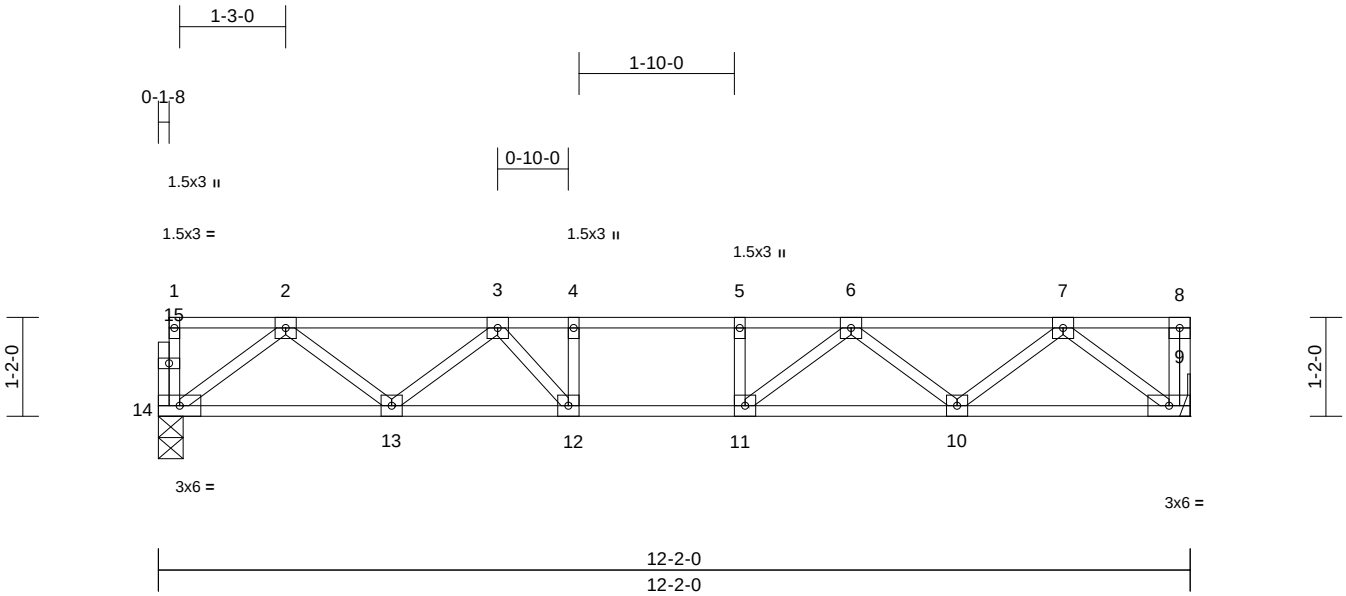

Scale = 1:27.2

Loading	(psf)	Spacing	1-7-3	CSI		DEFL	in	(loc)	l/defl	L/d	PLATES	GRIP
TCLL	40.0	Plate Grip DOL	1.00	TC	0.37	Vert(LL)	-0.07	10-11	>999	480	MT20	244/190
TCDL	10.0	Lumber DOL	1.00	BC	0.49	Vert(CT)	-0.10	10-11	>999	240		
BCLL	0.0	Rep Stress Incr	YES	WB	0.23	Horz(CT)	0.02	9	n/a	n/a		
BCDL	5.0	Code	IRC2015/TPI2014	Matrix-S							Weight: 62 lb	FT = 20%F, 11%E

LUMBER

TOP CHORD 2x4 SP No.2(flat)
BOT CHORD 2x4 SP No.2(flat)
WEBS 2x4 SP No.3(flat)
OTHERS 2x4 SP No.3(flat)

BRACING

TOP CHORD Structural wood sheathing directly applied or 6-0-0 oc purlins, except end verticals.
BOT CHORD Rigid ceiling directly applied or 10-0-0 oc bracing.

REACTIONS (size) 9= Mechanical, 14=0-3-8
Max Grav 9=524 (LC 1), 14=519 (LC 1)

FORCES (lb) - Maximum Compression/Maximum Tension

TOP CHORD 1-14=-28/0, 8-9=-32/0, 1-2=-2/0, 2-3=-999/0, 3-4=-1469/0, 4-5=-1469/0, 5-6=-1469/0, 6-7=-1004/0, 7-8=0/0
BOT CHORD 13-14=0/638, 12-13=0/1340, 11-12=0/1469, 10-11=0/1336, 9-10=0/640
WEBS 7-9=-803/0, 2-14=-799/0, 7-10=0/475, 2-13=0/470, 6-10=-432/0, 3-13=-444/0, 6-11=0/331, 5-11=-158/0, 4-12=-213/0, 3-12=0/363

NOTES

1) Unbalanced floor live loads have been considered for this design.
2) All plates are 3x3 MT20 unless otherwise indicated.
3) Refer to girder(s) for truss to truss connections.
4) This truss is designed in accordance with the 2015 International Residential Code sections R502.11.1 and R802.10.2 and referenced standard ANSI/TPI 1.
5) Recommend 2x6 strongbacks, on edge, spaced at 10-00-00 oc and fastened to each truss with 3-10d (0.131" X 3") nails. Strongbacks to be attached to walls at their outer ends or restrained by other means.
6) CAUTION, Do not erect truss backwards.

LOAD CASE(S) Standard

September 16,2022

ENGINEERING BY TRENCO A MiTek Affiliate
818 Soundside Road
Edenton, NC 27932

Job	Truss	Truss Type	Qty	Ply	Garman Homes - Wisteria A & B
Q2200858	K201	Floor Supported Gable	1	1	I54245358 Job Reference (optional)

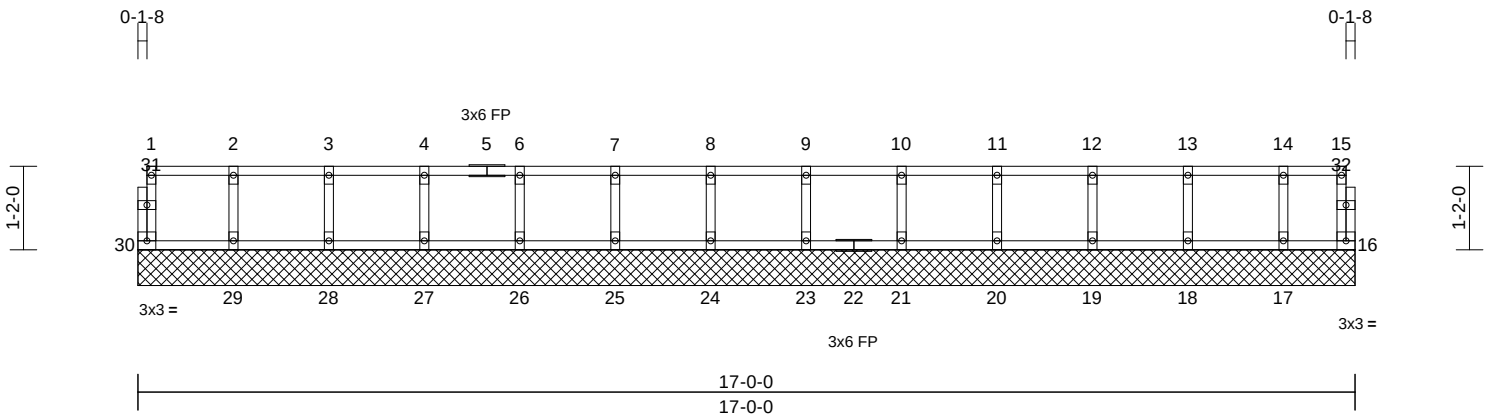

Scale = 1:32.2

Loading	(psf)	Spacing	2-0-0	CSI		DEFL	in	(loc)	l/defl	L/d	PLATES	GRIP
TCLL	40.0	Plate Grip DOL	1.00	TC	0.08	Vert(LL)	n/a	-	n/a	999	MT20	244/190
TCDL	10.0	Lumber DOL	1.00	BC	0.01	Vert(TL)	n/a	-	n/a	999		
BCLL	0.0	Rep Stress Incr	YES	WB	0.03	Horiz(TL)	0.00	16	n/a	n/a		
BCDL	5.0	Code	IRC2015/TPI2014	Matrix-R							Weight: 71 lb	FT = 20%F, 11%E

LUMBER

TOP CHORD 2x4 SP No.2(flat)
BOT CHORD 2x4 SP No.2(flat)
WEBS 2x4 SP No.3(flat)
OTHERS 2x4 SP No.3(flat)

BRACING

TOP CHORD Structural wood sheathing directly applied or 6-0-0 oc purlins, except end verticals.
BOT CHORD Rigid ceiling directly applied or 10-0-0 oc bracing.

REACTIONS (size) 16=17-0-0, 17=17-0-0, 18=17-0-0, 19=17-0-0, 20=17-0-0, 21=17-0-0, 23=17-0-0, 24=17-0-0, 25=17-0-0, 26=17-0-0, 27=17-0-0, 28=17-0-0, 29=17-0-0, 30=17-0-0
Max Grav 16=37 (LC 1), 17=122 (LC 1), 18=152 (LC 1), 19=145 (LC 1), 20=147 (LC 1), 21=147 (LC 1), 23=147 (LC 1), 24=147 (LC 1), 25=147 (LC 1), 26=147 (LC 1), 27=147 (LC 1), 28=147 (LC 1), 29=147 (LC 1), 30=53 (LC 1)

FORCES (lb) - Maximum Compression/Maximum Tension

TOP CHORD 1-30=-49/0, 15-16=-31/0, 1-2=-7/0, 2-3=-7/0, 3-4=-7/0, 4-6=-7/0, 6-7=-7/0, 7-8=-7/0, 8-9=-7/0, 9-10=-7/0, 10-11=-7/0, 11-12=-7/0, 12-13=-7/0, 13-14=-7/0, 14-15=-7/0
BOT CHORD 29-30=0/7, 28-29=0/7, 27-28=0/7, 26-27=0/7, 25-26=0/7, 24-25=0/7, 23-24=0/7, 21-23=0/7, 20-21=0/7, 19-20=0/7, 18-19=0/7, 17-18=0/7, 16-17=0/7
WEBS 2-29=-132/0, 3-28=-134/0, 4-27=-133/0, 6-26=-133/0, 7-25=-133/0, 8-24=-133/0, 9-23=-133/0, 10-21=-133/0, 11-20=-134/0, 12-19=-132/0, 13-18=-138/0, 14-17=-114/0

NOTES

1) All plates are 1.5x3 MT20 unless otherwise indicated.
2) Gable requires continuous bottom chord bearing.
3) Truss to be fully sheathed from one face or securely braced against lateral movement (i.e. diagonal web).
4) Gable studs spaced at 1-4-0 oc.
5) This truss is designed in accordance with the 2015 International Residential Code sections R502.11.1 and R802.10.2 and referenced standard ANSI/TPI 1.
6) Recommend 2x6 strongbacks, on edge, spaced at 10-00-00 oc and fastened to each truss with 3-10d (0.131" X 3") nails. Strongbacks to be attached to walls at their outer ends or restrained by other means.

LOAD CASE(S) Standard

September 16,2022

ENGINEERING BY TRENCO A MiTek Affiliate
818 Soundside Road
Edenton, NC 27932

Job	Truss	Truss Type	Qty	Ply	Garman Homes - Wisteria A & B
Q2200858	K203	Floor Supported Gable	1	1	I54245359 Job Reference (optional)

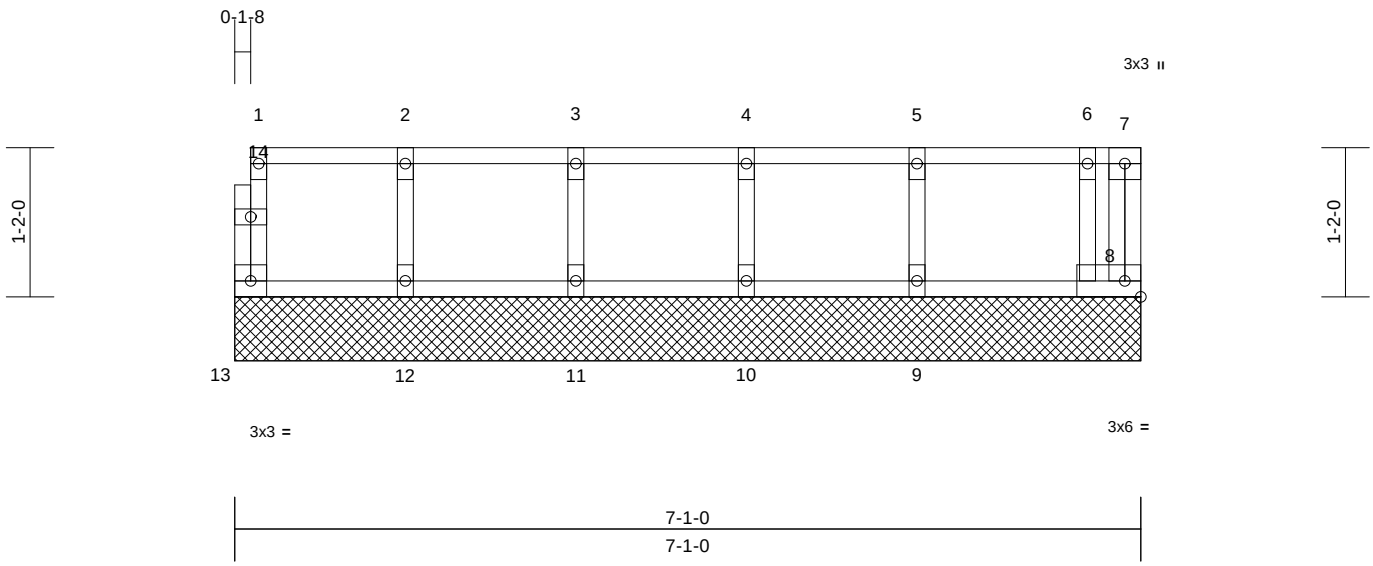

Scale = 1:18

Loading	(psf)	Spacing	2-0-0	CSI		DEFL	in	(loc)	l/defl	L/d	PLATES	GRIP
TCLL	40.0	Plate Grip DOL	1.00	TC	0.09	Vert(LL)	n/a	-	n/a	999	MT20	244/190
TCDL	10.0	Lumber DOL	1.00	BC	0.03	Vert(TL)	n/a	-	n/a	999		
BCLL	0.0	Rep Stress Incr	YES	WB	0.03	Horiz(TL)	0.00	8	n/a	n/a		
BCDL	5.0	Code	IRC2015/TPI2014	Matrix-R							Weight: 33 lb	FT = 20%F, 11%E

LUMBER

TOP CHORD 2x4 SP No.2(flat)
BOT CHORD 2x4 SP No.2(flat)
WEBS 2x4 SP No.3(flat)
OTHERS 2x4 SP No.3(flat)

BRACING

TOP CHORD Structural wood sheathing directly applied or 6-0-0 oc purlins, except end verticals.
BOT CHORD Rigid ceiling directly applied or 10-0-0 oc bracing.

REACTIONS (size) 8=7-1-0, 9=7-1-0, 10=7-1-0, 11=7-1-0, 12=7-1-0, 13=7-1-0
Max Grav 8=94 (LC 1), 9=161 (LC 1), 10=142 (LC 1), 11=151 (LC 1), 12=133 (LC 1), 13=64 (LC 1)

FORCES (lb) - Maximum Compression/Maximum Tension
TOP CHORD 1-13=-55/0, 7-8=0/6, 1-2=-17/0, 2-3=-17/0, 3-4=-17/0, 4-5=-17/0, 5-6=-17/0, 6-7=-1/0
BOT CHORD 12-13=0/17, 11-12=0/17, 10-11=0/17, 9-10=0/17, 8-9=0/17
WEBS 2-12=-126/0, 3-11=-136/0, 4-10=-130/0, 5-9=-143/0, 6-8=-96/0

NOTES

1) All plates are 1.5x3 MT20 unless otherwise indicated.
2) Gable requires continuous bottom chord bearing.
3) Truss to be fully sheathed from one face or securely braced against lateral movement (i.e. diagonal web).
4) Gable studs spaced at 1-4-0 oc.
5) This truss is designed in accordance with the 2015 International Residential Code sections R502.11.1 and R802.10.2 and referenced standard ANSI/TPI 1.
6) Recommend 2x6 strongbacks, on edge, spaced at 10-00-00 oc and fastened to each truss with 3-10d (0.131" X 3") nails. Strongbacks to be attached to walls at their outer ends or restrained by other means.
7) CAUTION, Do not erect truss backwards.

LOAD CASE(S) Standard

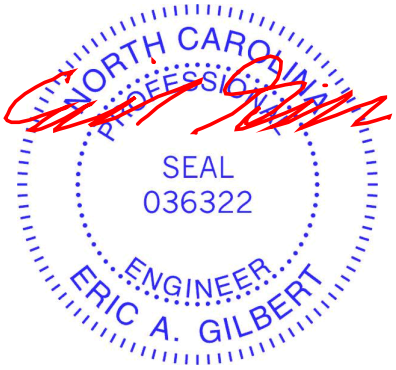

September 16,2022

ENGINEERING BY TRENCO A MiTek Affiliate
818 Soundside Road
Edenton, NC 27932

Job	Truss	Truss Type	Qty	Ply	Garman Homes - Wisteria A & B
Q2200858	K204	Floor Supported Gable	1	1	I54245360 Job Reference (optional)

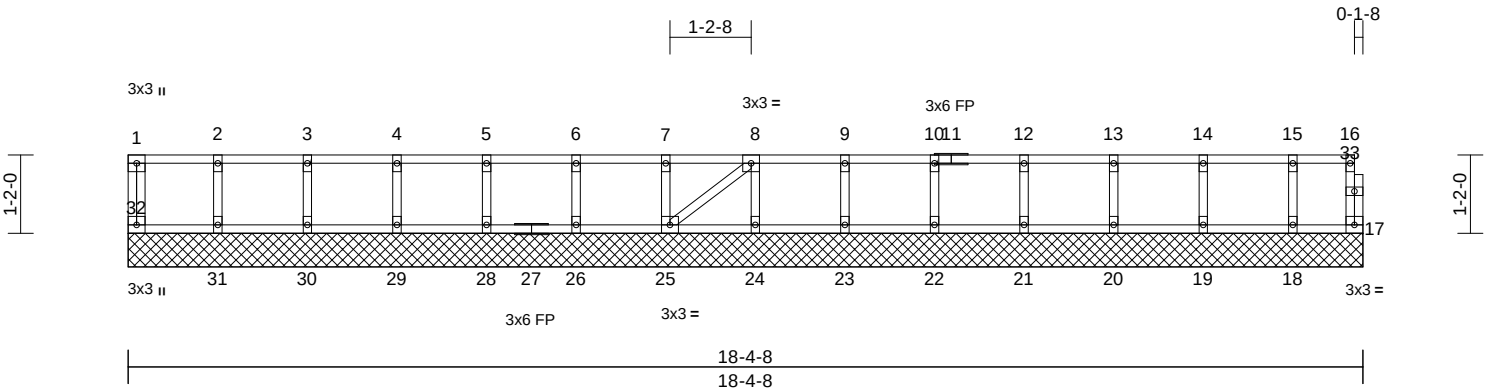

Scale = 1:34.3

Loading	(psf)	Spacing	2-0-0	CSI		DEFL	in	(loc)	l/defl	L/d	PLATES	GRIP
TCLL	40.0	Plate Grip DOL	1.00	TC	0.08	Vert(LL)	n/a	-	n/a	999	MT20	244/190
TCDL	10.0	Lumber DOL	1.00	BC	0.01	Vert(TL)	n/a	-	n/a	999		
BCLL	0.0	Rep Stress Incr	YES	WB	0.03	Horiz(TL)	0.00	17	n/a	n/a		
BCDL	5.0	Code	IRC2015/TPI2014	Matrix-S							Weight: 80 lb	FT = 20%F, 11%E

LUMBER

TOP CHORD 2x4 SP No.2(flat)
BOT CHORD 2x4 SP No.2(flat)
WEBS 2x4 SP No.3(flat)
OTHERS 2x4 SP No.3(flat) *Except* 17-33:2x4 SP No.2(flat)

BRACING

TOP CHORD Structural wood sheathing directly applied or 6-0-0 oc purlins, except end verticals.
BOT CHORD Rigid ceiling directly applied or 10-0-0 oc bracing.

REACTIONS (size) 17=18-4-8, 18=18-4-8, 19=18-4-8, 20=18-4-8, 21=18-4-8, 22=18-4-8, 23=18-4-8, 24=18-4-8, 25=18-4-8, 26=18-4-8, 28=18-4-8, 29=18-4-8, 30=18-4-8, 31=18-4-8, 32=18-4-8
Max Grav 17=32 (LC 1), 18=134 (LC 1), 19=150 (LC 1), 20=146 (LC 1), 21=147 (LC 1), 22=147 (LC 1), 23=147 (LC 1), 24=145 (LC 1), 25=148 (LC 1), 26=147 (LC 1), 28=147 (LC 1), 29=147 (LC 1), 30=145 (LC 1), 31=156 (LC 1), 32=52 (LC 1)

FORCES (lb) - Maximum Compression/Maximum Tension

TOP CHORD 1-32=-47/0, 16-17=-29/0, 1-2=0/0, 2-3=0/0, 3-4=0/0, 4-5=0/0, 5-6=0/0, 6-7=0/0, 7-8=0/0, 8-9=-2/0, 9-10=-2/0, 10-12=-2/0, 12-13=-2/0, 13-14=-2/0, 14-15=-2/0, 15-16=-2/0
BOT CHORD 31-32=0/0, 30-31=0/0, 29-30=0/0, 28-29=0/0, 26-28=0/0, 25-26=0/0, 24-25=0/2, 23-24=0/2, 22-23=0/2, 21-22=0/2, 20-21=0/2, 19-20=0/2, 18-19=0/2, 17-18=0/2
WEBS 2-31=-142/0, 3-30=-131/0, 4-29=-134/0, 5-28=-133/0, 6-26=-133/0, 7-25=-133/0, 8-24=-132/0, 9-23=-133/0, 10-22=-133/0, 12-21=-134/0, 13-20=-133/0, 14-19=-136/0, 15-18=-121/0, 8-25=-2/0

NOTES

1) All plates are 1.5x3 MT20 unless otherwise indicated.
2) Gable requires continuous bottom chord bearing.
3) Truss to be fully sheathed from one face or securely braced against lateral movement (i.e. diagonal web).
4) Gable studs spaced at 1-4-0 oc.
5) This truss is designed in accordance with the 2015 International Residential Code sections R502.11.1 and R802.10.2 and referenced standard ANSI/TPI 1.
6) Recommend 2x6 strongbacks, on edge, spaced at 10-00-00 oc and fastened to each truss with 3-10d (0.131" X 3") nails. Strongbacks to be attached to walls at their outer ends or restrained by other means.
7) CAUTION, Do not erect truss backwards.

LOAD CASE(S) Standard

September 16,2022

ENGINEERING BY TRENCO A MiTek Affiliate
818 Soundside Road
Edenton, NC 27932

Job	Truss	Truss Type	Qty	Ply	Garman Homes - Wisteria A & B
Q2200858	K207	Floor Supported Gable	1	1	I54245361 Job Reference (optional)

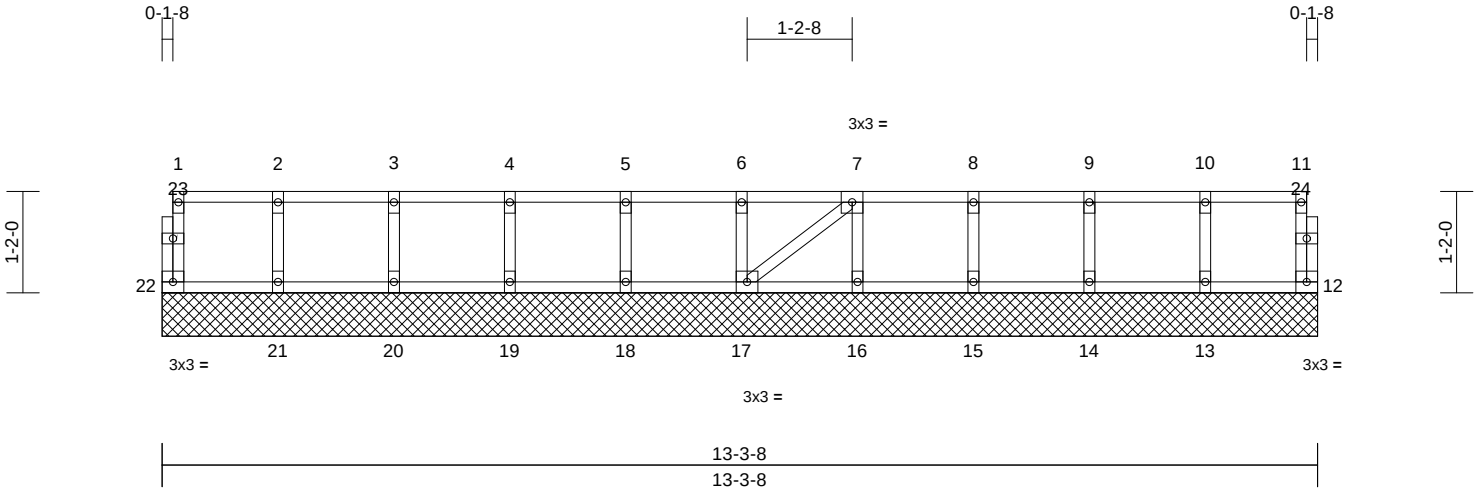

Scale = 1:26.5

Loading	(psf)	Spacing	2-0-0	CSI		DEFL	in	(loc)	l/defl	L/d	PLATES	GRIP
TCLL	40.0	Plate Grip DOL	1.00	TC	0.08	Vert(LL)	n/a	-	n/a	999	MT20	244/190
TCDL	10.0	Lumber DOL	1.00	BC	0.01	Vert(TL)	n/a	-	n/a	999		
BCLL	0.0	Rep Stress Incr	YES	WB	0.03	Horiz(TL)	0.00	12	n/a	n/a		
BCDL	5.0	Code	IRC2015/TPI2014	Matrix-S							Weight: 59 lb	FT = 20%F, 11%E

LUMBER
TOP CHORD 2x4 SP No.2(flat)
BOT CHORD 2x4 SP No.2(flat)
WEBS 2x4 SP No.3(flat)
OTHERS 2x4 SP No.3(flat)

BRACING
TOP CHORD Structural wood sheathing directly applied or 6-0-0 oc purlins, except end verticals.
BOT CHORD Rigid ceiling directly applied or 10-0-0 oc bracing.

REACTIONS (size) 12=13-3-8, 13=13-3-8, 14=13-3-8, 15=13-3-8, 16=13-3-8, 17=13-3-8, 18=13-3-8, 19=13-3-8, 20=13-3-8, 21=13-3-8, 22=13-3-8
Max Grav 12=46 (LC 1), 13=149 (LC 2), 14=147 (LC 2), 15=147 (LC 1), 16=152 (LC 1), 17=147 (LC 2), 18=147 (LC 2), 19=147 (LC 1), 20=146 (LC 2), 21=152 (LC 1), 22=152 (LC 1)

FORCES (lb) - Maximum Compression/Maximum Tension
TOP CHORD 1-22=-148/0, 11-12=-42/0, 1-2=-9/0, 2-3=-9/0, 3-4=-9/0, 4-5=-9/0, 5-6=-9/0, 6-7=-9/0, 7-8=-3/0, 8-9=-3/0, 9-10=-3/0, 10-11=-3/0
BOT CHORD 21-22=0/9, 20-21=0/9, 19-20=0/9, 18-19=0/9, 17-18=0/9, 16-17=0/3, 15-16=0/3, 14-15=0/3, 13-14=0/3, 12-13=0/3
WEBS 2-21=-138/0, 3-20=-133/0, 4-19=-134/0, 5-18=-133/0, 6-17=-133/0, 7-16=-138/0, 8-15=-133/0, 9-14=-133/0, 10-13=-135/0, 7-17=0/8

NOTES
1) All plates are 1.5x3 MT20 unless otherwise indicated.
2) Gable requires continuous bottom chord bearing.
3) Truss to be fully sheathed from one face or securely braced against lateral movement (i.e. diagonal web).
4) Gable studs spaced at 1-4-0 oc.
5) This truss is designed in accordance with the 2015 International Residential Code sections R502.11.1 and R802.10.2 and referenced standard ANSI/TPI 1.
6) Recommend 2x6 strongbacks, on edge, spaced at 10-00-00 oc and fastened to each truss with 3-10d (0.131" X 3") nails. Strongbacks to be attached to walls at their outer ends or restrained by other means.
7) Hanger(s) or other connection device(s) shall be provided sufficient to support concentrated load(s) 104 lb down at 0-2-4 on top chord. The design/selection of such connection device(s) is the responsibility of others.
8) In the LOAD CASE(S) section, loads applied to the face of the truss are noted as front (F) or back (B).

LOAD CASE(S) Standard
1) Dead + Floor Live (balanced): Lumber Increase=1.00, Plate Increase=1.00
Uniform Loads (lb/ft)
Vert: 12-22=-10, 1-11=-100
Concentrated Loads (lb)
Vert: 1=-104 (F)

September 16,2022

ENGINEERING BY TRENCO A MiTek Affiliate
818 Soundside Road
Edenton, NC 27932

Job	Truss	Truss Type	Qty	Ply	Garman Homes - Wisteria A & B
Q2200858	K209	Floor Supported Gable	1	1	I54245362 Job Reference (optional)

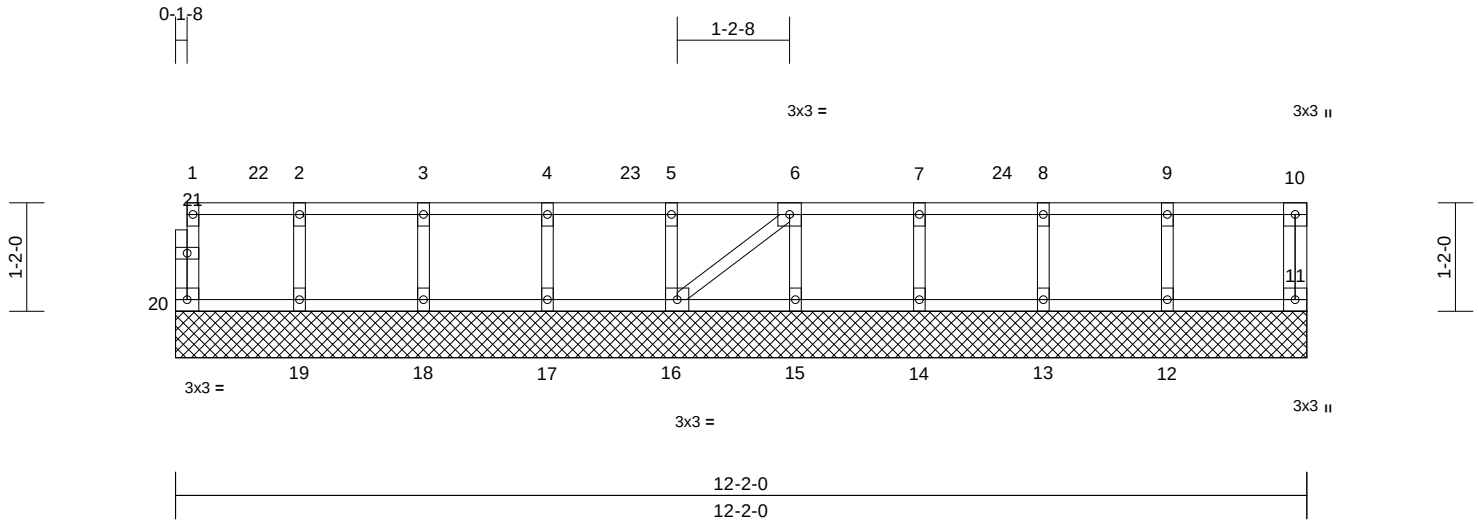

Scale = 1:24.8

Loading	(psf)	Spacing	2-0-0	CSI		DEFL	in	(loc)	l/defl	L/d	PLATES	GRIP
TCLL	40.0	Plate Grip DOL	0.90	TC	0.11	Vert(LL)	n/a	-	n/a	999	MT20	244/190
TCDL	10.0	Plate Metal DOL	0.90	BC	0.02	Vert(TL)	n/a	-	n/a	999		
BCLL	0.0	Lumber DOL	0.90	WB	0.04	Horiz(TL)	0.00	11	n/a	n/a		
BCDL	5.0	Rep Stress Incr	YES	Matrix-S								
		Code	IRC2015/TPI2014								Weight: 54 lb	FT = 20%F, 11%E

LUMBER

TOP CHORD 2x4 SP No.2(flat)
BOT CHORD 2x4 SP No.2(flat)
WEBS 2x4 SP No.3(flat)
OTHERS 2x4 SP No.3(flat)

BRACING

TOP CHORD Structural wood sheathing directly applied or 6-0-0 oc purlins, except end verticals.
BOT CHORD Rigid ceiling directly applied or 10-0-0 oc bracing.

REACTIONS (size) 11=12-2-0, 12=12-2-0, 13=12-2-0, 14=12-2-0, 15=12-2-0, 16=12-2-0, 17=12-2-0, 18=12-2-0, 19=12-2-0, 20=12-2-0
Max Grav 11=61 (LC 5), 12=199 (LC 7), 13=170 (LC 7), 14=161 (LC 5), 15=176 (LC 7), 16=174 (LC 7), 17=159 (LC 5), 18=172 (LC 7), 19=185 (LC 7), 20=60 (LC 7)

FORCES (lb) - Maximum Compression/Maximum Tension
TOP CHORD 1-20=-55/0, 10-11=-55/0, 1-2=-3/0, 2-3=-3/0, 3-4=-3/0, 4-5=-3/0, 5-6=-3/0, 6-7=0/0, 7-8=0/0, 8-9=0/0, 9-10=0/0
BOT CHORD 19-20=0/3, 18-19=0/3, 17-18=0/3, 16-17=0/3, 15-16=0/0, 14-15=0/0, 13-14=0/0, 12-13=0/0, 11-12=0/0
WEBS 2-19=-171/0, 3-18=-159/0, 4-17=-146/0, 5-16=-163/0, 6-15=-162/0, 7-14=-147/0, 8-13=-157/0, 9-12=-183/0, 6-16=0/4

NOTES

1) Unbalanced floor live loads have been considered for this design.
2) All plates are 1.5x3 MT20 unless otherwise indicated.
3) Gable requires continuous bottom chord bearing.
4) Truss to be fully sheathed from one face or securely braced against lateral movement (i.e. diagonal web).
5) Gable studs spaced at 1-4-0 oc.
6) This truss is designed in accordance with the 2015 International Residential Code sections R502.11.1 and R802.10.2 and referenced standard ANSI/TPI 1.
7) Recommend 2x6 strongbacks, on edge, spaced at 10-00-00 oc and fastened to each truss with 3-10d (0.131" X 3") nails. Strongbacks to be attached to walls at their outer ends or restrained by other means.
8) CAUTION, Do not erect truss backwards.
9) Hanger(s) or other connection device(s) shall be provided sufficient to support concentrated load(s) 81 lb down at 0-10-12, 78 lb down at 2-10-12, 78 lb down at 4-10-12, 78 lb down at 6-10-12, and 78 lb down at 8-10-12, and 78 lb down at 10-10-12 on top chord. The design/selection of such connection device(s) is the responsibility of others.
10) In the LOAD CASE(S) section, loads applied to the face of the truss are noted as front (F) or back (B).

LOAD CASE(S) Standard

1) Dead + Roof Live (balanced): Lumber Increase=0.90, Plate Increase=0.90 Plt. metal=0.90
   Uniform Loads (lb/ft)
   Vert: 11-20=-10, 1-10=-20
   Concentrated Loads (lb)
   Vert: 3=-78 (F), 6=-78 (F), 9=-78 (F), 22=-81 (F), 23=-78 (F), 24=-78 (F)

September 16,2022

ENGINEERING BY TRENCO A MiTek Affiliate
818 Soundside Road
Edenton, NC 27932

Symbols

PLATE LOCATION AND ORIENTATION

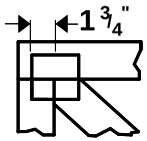

Center plate on joint unless x, y offsets are indicated. Dimensions are in ft-in-sixteenths. Apply plates to both sides of truss and fully embed teeth.

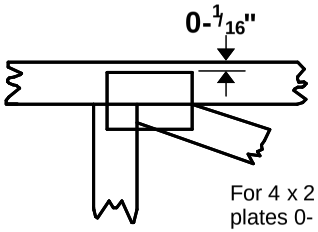

For 4 x 2 orientation, locate plates 0- 1/16" from outside edge of truss.

This symbol indicates the required direction of slots in connector plates.

*** Plate location details available in MiTek 20/20 software or upon request.**

PLATE SIZE

4 x 4

The first dimension is the plate width measured perpendicular to slots. Second dimension is the length parallel to slots.

LATERAL BRACING LOCATION

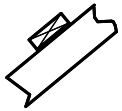

Indicated by symbol shown and/or by text in the bracing section of the output. Use T or I bracing if indicated.

BEARING

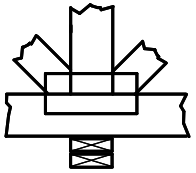

Indicates location where bearings (supports) occur. Icons vary but reaction section indicates joint number where bearings occur. Min size shown is for crushing only.

Industry Standards:

ANSI/TPI1: National Design Specification for Metal Plate Connected Wood Truss Construction.
DSB-89: Design Standard for Bracing.
BCSI: Building Component Safety Information, Guide to Good Practice for Handling, Installing & Bracing of Metal Plate Connected Wood Trusses.

Numbering System

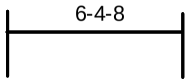

dimensions shown in ft-in-sixteenths
(Drawings not to scale)

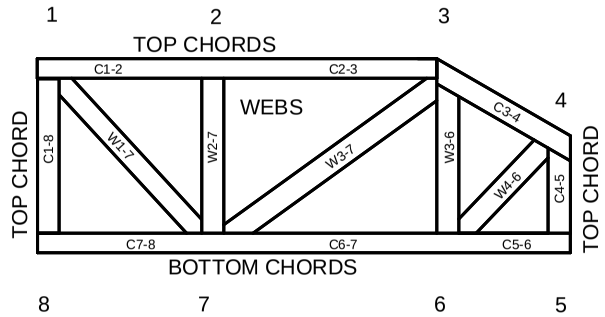

JOINTS ARE GENERALLY NUMBERED/LETTERED CLOCKWISE AROUND THE TRUSS STARTING AT THE JOINT FARTHEST TO THE LEFT.

CHORDS AND WEBS ARE IDENTIFIED BY END JOINT NUMBERS/LETTERS.

PRODUCT CODE APPROVALS

ICC-ES Reports:

ESR-1311, ESR-1352, ESR1988
ER-3907, ESR-2362, ESR-1397, ESR-3282

Trusses are designed for wind loads in the plane of the truss unless otherwise shown.

Lumber design values are in accordance with ANSI/TPI 1 section 6.3 These truss designs rely on lumber values established by others.

MiTek

ENGINEERING BY TRENCO
A MiTek Affiliate

General Safety Notes

Failure to Follow Could Cause Property Damage or Personal Injury

1. Additional stability bracing for truss system, e.g. diagonal or X-bracing, is always required. See BCSI.
2. Truss bracing must be designed by an engineer. For wide truss spacing, individual lateral braces themselves may require bracing, or alternative Tor I bracing should be considered.
3. Never exceed the design loading shown and never stack materials on inadequately braced trusses.
4. Provide copies of this truss design to the building designer, erection supervisor, property owner and all other interested parties.
5. Cut members to bear tightly against each other.
6. Place plates on each face of truss at each joint and embed fully. Knots and wane at joint locations are regulated by ANSI/TPI 1.
7. Design assumes trusses will be suitably protected from the environment in accord with ANSI/TPI 1.
8. Unless otherwise noted, moisture content of lumber shall not exceed 19% at time of fabrication.
9. Unless expressly noted, this design is not applicable for use with fire retardant, preservative treated, or green lumber.
10. Camber is a non-structural consideration and is the responsibility of truss fabricator. General practice is to camber for dead load deflection.
11. Plate type, size, orientation and location dimensions indicated are minimum plating requirements.
12. Lumber used shall be of the species and size, and in all respects, equal to or better than that specified.
13. Top chords must be sheathed or purlins provided at spacing indicated on design.
14. Bottom chords require lateral bracing at 10 ft. spacing, or less, if no ceiling is installed, unless otherwise noted.
15. Connections not shown are the responsibility of others.
16. Do not cut or alter truss member or plate without prior approval of an engineer.
17. Install and load vertically unless indicated otherwise.
18. Use of green or treated lumber may pose unacceptable environmental, health or performance risks. Consult with project engineer before use.
19. Review all portions of this design (front, back, words and pictures) before use. Reviewing pictures alone is not sufficient.
20. Design assumes manufacture in accordance with ANSI/TPI 1 Quality Criteria.
21. The design does not take into account any dynamic or other loads other than those expressly stated.

Products				
Net Qty	Plies	Product	Length	PlotID
2	2	1-3/4X9-1/4 LP-LVL 2900Fb-2.0E	3' 0"	DB3
2	2	1-3/4X11-7/8 LP-LVL 2900Fb-2.0E	34' 0"	DB34
2	2	1-3/4X11-7/8 LP-LVL 2900Fb-2.0E	21' 0"	DB21
2	2	1-3/4X14 LP-LVL 2900Fb-2.0E	6' 0"	FB5A
2	2	1-3/4X14 LP-LVL 2900Fb-2.0E	5' 0"	FB5
2	2	1-3/4X14 LP-LVL 2900Fb-2.0E	4' 0"	FB4
2	2	1-3/4X14 LP-LVL 2900Fb-2.0E	4' 0"	FB4A
3	3	1-3/4X20 LP-LVL 2900Fb-2.0E	22' 0"	FB22

Truss Connector Total List		
Qty	Product	Manuf
11	LUS410	Simpson
1	HGUS414*	Simpson
36	SDW22500*	Simpson

EXTERIOR DIMENSIONS ARE FACE OF SHEATHING
SHEATHING IS FLUSH TO FACE OF FOUNDATION

SHOP DRAWING APPROVAL

THIS LAYOUT IS THE SOLE SOURCE FOR FABRICATION OF TRUSSES AND VOIDS ALL PREVIOUS ARCHITECTURAL OR OTHER TRUSS LAYOUTS. REVIEW AND APPROVAL OF THIS LAYOUT MUST BE RECEIVED BEFORE ANY TRUSSES WILL BE BUILT. VERIFY ALL CONDITIONS TO INSURE AGAINST CHANGES THAT WILL RESULT IN EXTRA CHARGES TO YOU.

REVIEWED BY: APPROVED BY: DATE:

QUALITY AUDITED by: IBC 1704.2 IBC 2303.4 ANSI/TPI 1-2002 ANSI/TPI 1-2007 ANSI/TPI 1-2014 CAROLINA STRUCTURAL SYSTEMS, LLC Star, NC - Plant E30-437 910-491-9004

Carolina Structural Systems
Roof Trusses • Floor Trusses • EWP
Carolina Structural Systems
P.O. Box 157, Ether, NC 27247
225 Frame Shop Rd., Star, NC 27356
910-491-9004

THIS IS A TRUSS PLACEMENT DIAGRAM ONLY

These trusses are designed as individual building components to be incorporated into the building design at the specification of the building designer. See individual design sheets for each truss design identified on the placement drawing. The building designer is responsible for temporary and permanent bracing of the roof and floor system and for the overall structure. The design of the truss support structure including headers, beams, walls, and columns is the responsibility of the building designer. For general guidance regarding bracing, consult "Bracing of Wood Trusses" available from the Truss Plate Institute, 583 D'Onifrio Drive; Madison, WI 53179.

ROOF DATA

Roof Area: 2077.76 SF

Job #: Q2200858
Customer: GARMAN HOMES
Site Address:
City, ST, ZIP:

Plan: WISTERIA A&B FLOOR
Date: 2/10/2023
Sales Rep: RW
Designer: JSP

ENGINEERING BY TRENCO
A MiTek Affiliate

Trenco
818 Soundside Rd
Edenton, NC 27932

Re: Q2200859
Garman Homes - Wisteria A Roof

The truss drawing(s) referenced below have been prepared by Truss Engineering Co. under my direct supervision based on the parameters provided by Carolina Structural Systems, LLC.

Pages or sheets covered by this seal: I54261561 thru I54261583

My license renewal date for the state of North Carolina is December 31, 2022.

North Carolina COA: C-0844

NORTH CAROLINA PROFESSIONAL SEAL 036322 ENGINEER ERIC A. GILBERT

September 19,2022

Gilbert, Eric

IMPORTANT NOTE: The seal on these truss component designs is a certification that the engineer named is licensed in the jurisdiction(s) identified and that the designs comply with ANSI/TPI 1. These designs are based upon parameters shown (e.g., loads, supports, dimensions, shapes and design codes), which were given to MiTek or TRENCO. Any project specific information included is for MiTek's or TRENCO's customers file reference purpose only, and was not taken into account in the preparation of these designs. MiTek or TRENCO has not independently verified the applicability of the design parameters or the designs for any particular building. Before use, the building designer should verify applicability of design parameters and properly incorporate these designs into the overall building design per ANSI/TPI 1, Chapter 2.

Job	Truss	Truss Type	Qty	Ply	Garman Homes - Wisteria A Roof
Q2200859	A01	Piggyback Base Supported Gable	1	1	I54261561 Job Reference (optional)

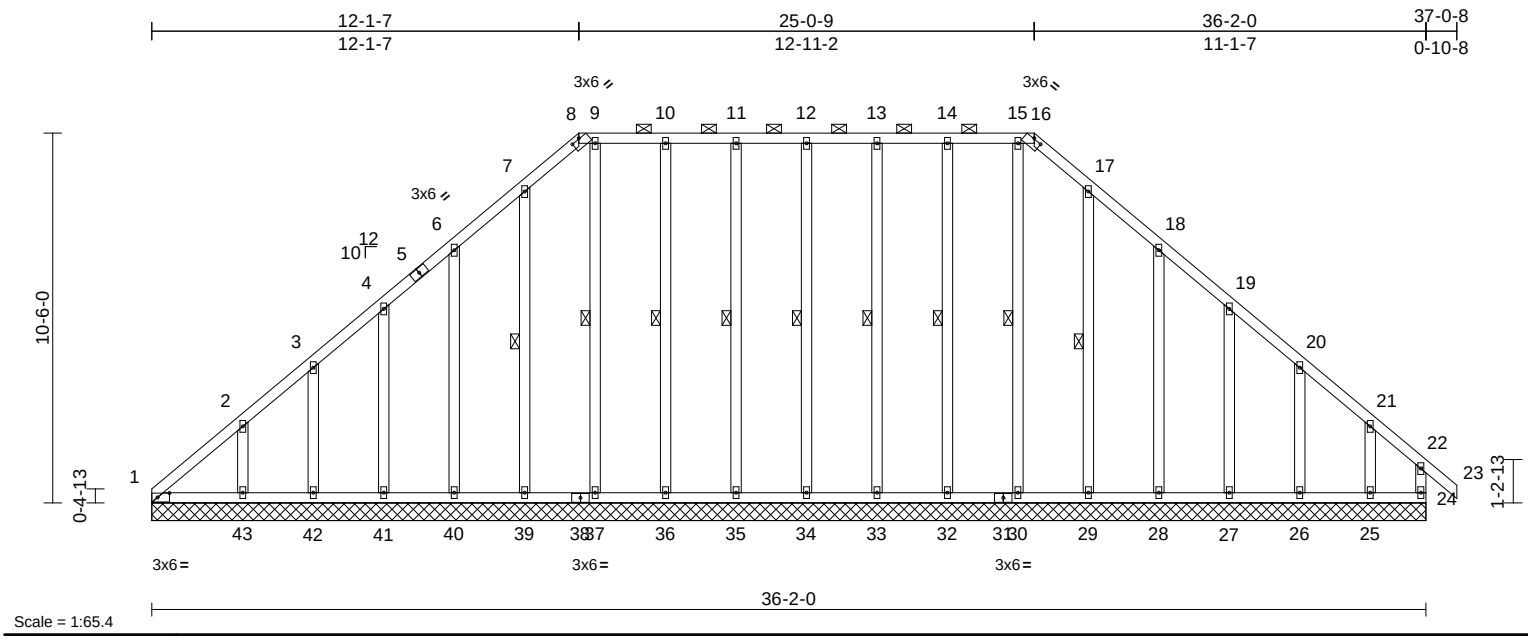

Scale = 1:65.4

Plate Offsets (X, Y): [1:0-4-1,0-1-8], [8:0-3-0,0-0-4], [16:0-3-0,0-0-4]

Loading	(psf)	Spacing	2-0-0	CSI		DEFL	in	(loc)	l/defl	L/d	PLATES	GRIP
TCLL (roof)	20.0	Plate Grip DOL	1.00	TC	0.10	Vert(LL)	n/a	-	n/a	999	MT20	244/190
TCDL	10.0	Lumber DOL	1.15	BC	0.10	Vert(CT)	n/a	-	n/a	999		
BCLL	0.0*	Rep Stress Incr	YES	WB	0.14	Horz(CT)	0.01	24	n/a	n/a		
BCDL	10.0	Code	IRC2015/TPI2014	Matrix-AS							Weight: 304 lb	FT = 20%

LUMBER

TOP CHORD	2x4 SP No.2
BOT CHORD	2x4 SP No.2
WEBS	2x4 SP No.2
OTHERS	2x4 SP No.3

BRACING

TOP CHORD Structural wood sheathing directly applied, except end verticals, and 2-0-0 oc purlins (6-0-0 max.): 8-16.

BOT CHORD Rigid ceiling directly applied.

WEBS 1 Row at midpt 12-34, 11-35, 10-36, 9-37, 7-39, 13-33, 14-32, 15-30, 17-29

REACTIONS (size) 1=36-2-0, 24=36-2-0, 25=36-2-0, 26=36-2-0, 27=36-2-0, 28=36-2-0, 29=36-2-0, 30=36-2-0, 32=36-2-0, 33=36-2-0, 34=36-2-0, 35=36-2-0, 36=36-2-0, 37=36-2-0, 39=36-2-0, 40=36-2-0, 41=36-2-0, 42=36-2-0, 43=36-2-0, 44=36-2-0

Max Horiz 1=213 (LC 11), 44=213 (LC 11)

Max Uplift 1=-69 (LC 10), 25=-100 (LC 12), 26=-25 (LC 12), 27=-36 (LC 12), 28=-45 (LC 12), 32=-10 (LC 12), 33=-1 (LC 12), 34=-1 (LC 12), 35=-1 (LC 12), 36=-10 (LC 12), 40=-45 (LC 12), 41=-35 (LC 12), 42=-31 (LC 12), 43=-51 (LC 12), 44=-69 (LC 10)

Max Grav 1=166 (LC 21), 24=151 (LC 20), 25=163 (LC 21), 26=170 (LC 21), 27=167 (LC 21), 28=172 (LC 21), 29=158 (LC 25), 30=156 (LC 25), 32=165 (LC 24), 33=160 (LC 25), 34=160 (LC 25), 35=160 (LC 24), 36=164 (LC 25), 37=168 (LC 20), 39=173 (LC 20), 40=166 (LC 20), 41=173 (LC 20), 42=147 (LC 20), 43=233 (LC 20), 44=166 (LC 21)

FORCES (lb) - Maximum Compression/Maximum Tension

TOP CHORD 1-2=-195/201, 2-3=-179/163, 3-4=-161/143, 4-6=-142/135, 6-7=-187/209, 7-8=-220/247, 8-9=-185/218, 9-10=-185/218, 10-11=-185/218, 11-12=-185/218, 12-13=-185/218, 13-14=-185/218, 14-15=-185/218, 15-16=-185/218, 16-17=-220/247, 17-18=-187/209, 18-19=-124/135, 19-20=-69/69, 20-21=-55/43, 21-22=-102/114, 22-23=0/39, 22-24=-125/58

BOT CHORD 1-43=-94/117, 42-43=-94/117, 41-42=-94/117, 40-41=-94/117, 39-40=-94/117, 37-39=-94/117, 36-37=-94/117, 35-36=-94/117, 34-35=-94/117, 33-34=-94/117, 32-33=-94/117, 30-32=-94/117, 29-30=-94/117, 28-29=-94/117, 27-28=-94/117, 26-27=-94/117, 25-26=-94/117, 24-25=-94/117

WEBS 12-34=-120/43, 11-35=-120/44, 10-36=-124/54, 9-37=-128/54, 7-39=-133/39, 6-40=-138/94, 4-41=-131/80, 3-42=-119/78, 2-43=-160/96, 13-33=-120/44, 14-32=-125/54, 15-30=-116/54, 17-29=-118/39, 18-28=-139/94, 19-27=-127/80, 20-26=-131/79, 21-25=-150/113

NOTES

1) Unbalanced roof live loads have been considered for this design.
2) Wind: ASCE 7-10; Vult=120mph (3-second gust) Vasd=95mph; TCDL=6.0psf; BCDL=6.0psf; h=25ft; B=45ft; L=36ft; eave=2ft; Cat. II; Exp B; Enclosed; MWFRS (directional) and C-C Corner (3) 0-0-0 to 3-7-6, Exterior (2) 3-7-6 to 12-1-7, Corner (3) 12-1-7 to 15-8-13, Exterior (2) 15-8-13 to 25-0-9, Corner (3) 25-0-9 to 28-7-0, Exterior (2) 28-7-0 to 37-0-8 zone; cantilever left and right exposed ; end vertical left and right exposed;C-C for members and forces & MWFRS for reactions shown; Lumber DOL=1.60 plate grip DOL=1.60
3) Truss designed for wind loads in the plane of the truss only. For studs exposed to wind (normal to the face), see Standard Industry Gable End Details as applicable, or consult qualified building designer as per ANSI/TPI 1.
4) Provide adequate drainage to prevent water ponding.
5) All plates are 2x4 MT20 unless otherwise indicated.
6) Gable requires continuous bottom chord bearing.
7) Gable studs spaced at 2-0-0 oc.

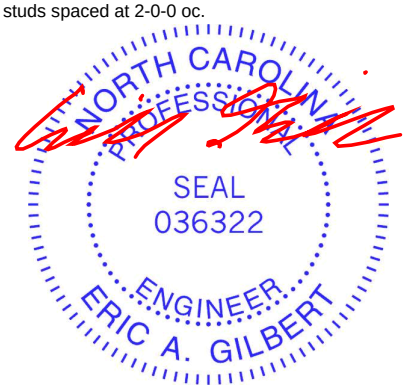

September 19,2022

Continued on page 2

ENGINEERING BY TRENCO A MiTek Affiliate
818 Soundside Road
Edenton, NC 27932

8) This truss has been designed for a 10.0 psf bottom chord live load nonconcurrent with any other live loads.
9) * This truss has been designed for a live load of 20.0psf on the bottom chord in all areas where a rectangle 3-06-00 tall by 2-00-00 wide will fit between the bottom chord and any other members.
10) Provide mechanical connection (by others) of truss to bearing plate capable of withstanding 69 lb uplift at joint 1, 1 lb uplift at joint 34, 1 lb uplift at joint 35, 10 lb uplift at joint 36, 45 lb uplift at joint 40, 35 lb uplift at joint 41, 31 lb uplift at joint 42, 51 lb uplift at joint 43, 1 lb uplift at joint 33, 10 lb uplift at joint 32, 45 lb uplift at joint 28, 36 lb uplift at joint 27, 25 lb uplift at joint 26, 100 lb uplift at joint 25 and 69 lb uplift at joint 1.
11) This truss is designed in accordance with the 2015 International Residential Code sections R502.11.1 and R802.10.2 and referenced standard ANSI/TPI 1.
12) This truss design requires that a minimum of 7/16" structural wood sheathing be applied directly to the top chord and 1/2" gypsum sheetrock be applied directly to the bottom chord.
13) Graphical purlin representation does not depict the size or the orientation of the purlin along the top and/or bottom chord.

LOAD CASE(S) Standard

Job	Truss	Truss Type	Qty	Ply	Garman Homes - Wisteria A Roof
Q2200859	A02	Piggyback Base	6	1	I54261562 Job Reference (optional)

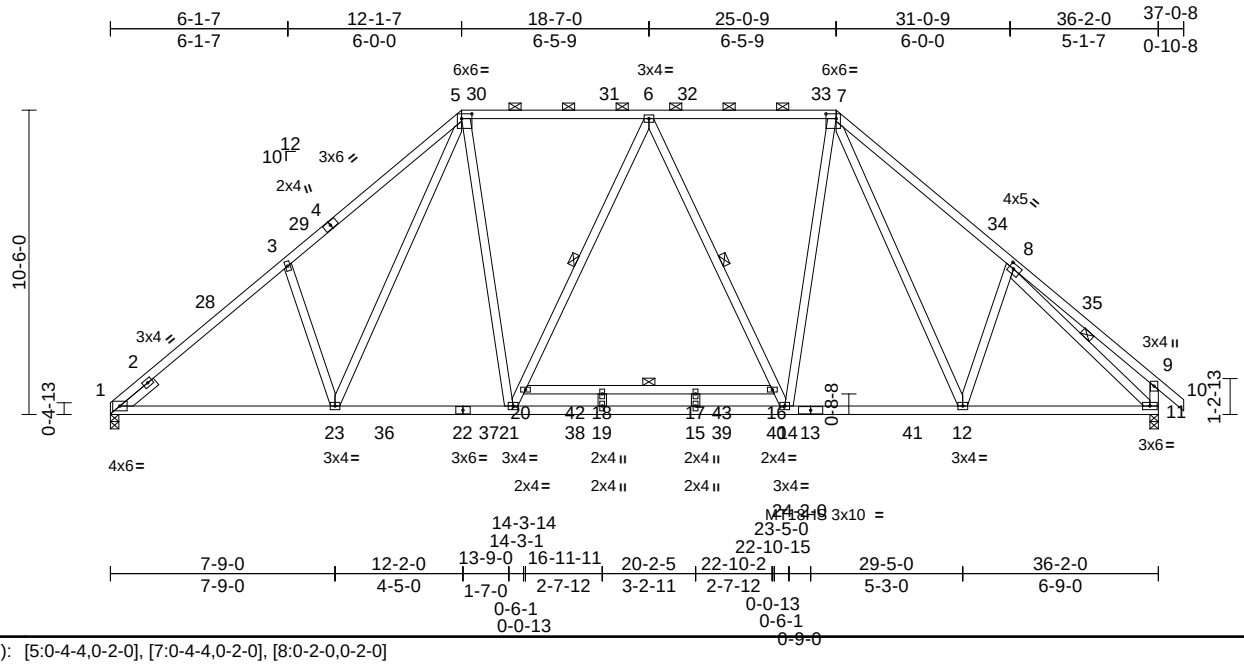

Scale = 1:79.5

Plate Offsets (X, Y): [5:0-4-4,0-2-0], [7:0-4-4,0-2-0], [8:0-2-0,0-2-0]

Loading	(psf)	Spacing	2-0-0	CSI		DEFL	in	(loc)	l/defl	L/d	PLATES	GRIP
TCLL (roof)	20.0	Plate Grip DOL	1.00	TC	0.55	Vert(LL)	-0.38	15-19	>999	240	MT20	244/190
TCDL	10.0	Lumber DOL	1.15	BC	0.93	Vert(CT)	-0.68	15-19	>636	180	MT18HS	244/190
BCLL	0.0*	Rep Stress Incr	YES	WB	0.51	Horz(CT)	0.08	11	n/a	n/a		
BCDL	10.0	Code	IRC2015/TPI2014	Matrix-AS							Weight: 258 lb	FT = 20%

LUMBER

TOP CHORD 2x4 SP No.2
BOT CHORD 2x4 SP No.2 *Except* 13-11,22-13:2x4 SP No.1
WEBS 2x4 SP No.3 *Except* 11-9:2x4 SP No.2
SLIDER Left 2x4 SP No.2 -- 1-6-0

BRACING

TOP CHORD Structural wood sheathing directly applied, except end verticals, and 2-0-0 oc purlins (4-4-15 max.): 5-7.
BOT CHORD Rigid ceiling directly applied. Except: 6-0-0 oc bracing: 16-20
WEBS 1 Row at midpt 8-11, 6-14, 6-21

REACTIONS (size) 1=0-3-8, 11=0-3-8
Max Horiz 1=212 (LC 11)
Max Grav 1=1648 (LC 20), 11=1717 (LC 21)

FORCES (lb) - Maximum Compression/Maximum Tension
TOP CHORD 1-3=-2231/95, 3-5=-2199/206, 5-6=-1536/143, 6-7=-1490/144, 7-8=-1978/195, 8-9=-397/102, 9-10=0/39, 9-11=-400/126
BOT CHORD 1-23=0/1799, 21-23=0/1510, 19-21=0/1687, 15-19=0/1687, 14-15=0/1687, 12-14=0/1388, 11-12=0/1407, 18-20=-57/0, 17-18=-57/0, 16-17=-57/0
WEBS 8-11=-1727/1, 6-16=-359/73, 14-16=-427/33, 7-14=0/800, 7-12=-118/285, 8-12=-179/182, 20-21=-348/45, 6-20=-279/84, 5-21=0/715, 5-23=-126/487, 3-23=-347/186, 18-19=-71/0, 15-17=-73/0

NOTES

1) Unbalanced roof live loads have been considered for this design.
2) Wind: ASCE 7-10; Vult=120mph (3-second gust) Vasd=95mph; TCDL=6.0psf; BCDL=6.0psf; h=25ft; B=45ft; L=36ft; eave=5ft; Cat. II; Exp B; Enclosed; MWFRS (directional) and C-C Exterior (2) 0-1-12 to 3-9-2, Interior (1) 3-9-2 to 12-1-7, Exterior (2) 12-1-7 to 17-2-13, Interior (1) 17-2-13 to 25-0-9, Exterior (2) 25-0-9 to 30-1-15, Interior (1) 30-1-15 to 37-0-8 zone; cantilever left and right exposed ; end vertical left and right exposed;C-C for members and forces & MWFRS for reactions shown; Lumber DOL=1.60 plate grip DOL=1.60
3) Provide adequate drainage to prevent water ponding.
4) All plates are MT20 plates unless otherwise indicated.
5) This truss has been designed for a 10.0 psf bottom chord live load nonconcurrent with any other live loads.
6) * This truss has been designed for a live load of 20.0psf on the bottom chord in all areas where a rectangle 3-06-00 tall by 2-00-00 wide will fit between the bottom chord and any other members, with BCDL = 10.0psf.
7) This truss is designed in accordance with the 2015 International Residential Code sections R502.11.1 and R802.10.2 and referenced standard ANSI/TPI 1.
8) This truss design requires that a minimum of 7/16" structural wood sheathing be applied directly to the top chord and 1/2" gypsum sheetrock be applied directly to the bottom chord.
9) Graphical purlin representation does not depict the size or the orientation of the purlin along the top and/or bottom chord.

LOAD CASE(S) Standard

September 19,2022

ENGINEERING BY TRENCO A MiTek Affiliate
818 Soundside Road
Edenton, NC 27932

Job	Truss	Truss Type	Qty	Ply	Garman Homes - Wisteria A Roof
Q2200859	A03	Piggyback Base	6	1	I54261563 Job Reference (optional)

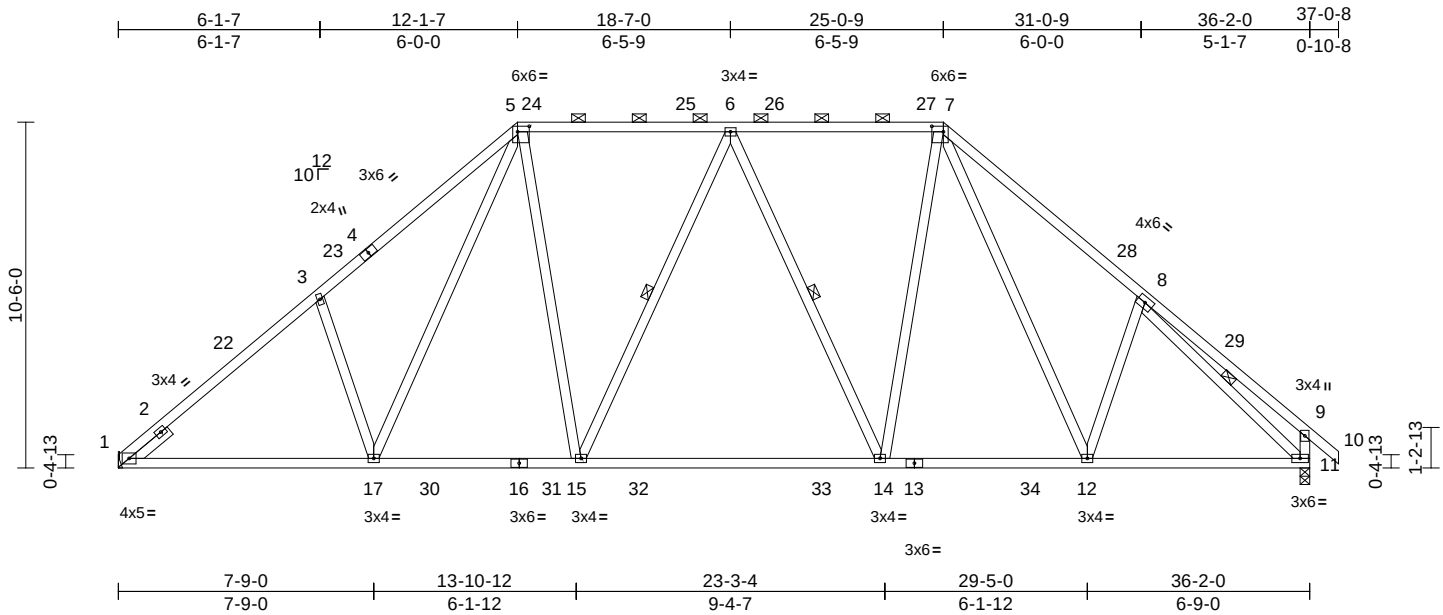

Scale = 1:70

Plate Offsets (X, Y): [5:0-4-4,0-2-0], [7:0-4-4,0-2-0]

Loading	(psf)	Spacing	2-0-0	CSI		DEFL	in	(loc)	l/defl	L/d	PLATES	GRIP
TCLL (roof)	20.0	Plate Grip DOL	1.00	TC	0.55	Vert(LL)	-0.26	14-15	>999	240	MT20	244/190
TCDL	10.0	Lumber DOL	1.15	BC	0.96	Vert(CT)	-0.48	14-15	>902	180		
BCLL	0.0*	Rep Stress Incr	YES	WB	0.46	Horz(CT)	0.08	11	n/a	n/a		
BCDL	10.0	Code	IRC2015/TPI2014	Matrix-AS							Weight: 243 lb	FT = 20%

LUMBER
TOP CHORD 2x4 SP No.2
BOT CHORD 2x4 SP No.2
WEBS 2x4 SP No.3 *Except* 11-9:2x4 SP No.2
SLIDER Left 2x4 SP No.2 -- 1-6-0

BRACING
TOP CHORD Structural wood sheathing directly applied, except end verticals, and 2-0-0 oc purlins (4-9-2 max.): 5-7.
BOT CHORD Rigid ceiling directly applied.
WEBS 1 Row at midpt 8-11, 6-14, 6-15

REACTIONS (size) 1= Mechanical, 11=0-3-8
Max Horiz 1=213 (LC 11)
Max Uplift 1=-10 (LC 12), 11=-36 (LC 12)
Max Grav 1=1500 (LC 20), 11=1559 (LC 21)

FORCES (lb) - Maximum Compression/Maximum Tension
TOP CHORD 1-3=-2028/173, 3-5=-2004/284, 5-6=-1335/215, 6-7=-1290/215, 7-8=-1778/265, 8-9=-363/111, 9-10=0/39, 9-11=-377/133
BOT CHORD 1-17=-53/1653, 15-17=0/1333, 14-15=0/1441, 12-14=0/1212, 11-12=-23/1261
WEBS 8-11=-1553/65, 6-14=-358/73, 7-14=0/616, 7-12=-99/316, 8-12=-192/174, 6-15=-279/83, 5-15=0/534, 5-17=-117/538, 3-17=-360/186

NOTES
1) Unbalanced roof live loads have been considered for this design.
2) Wind: ASCE 7-10; Vult=120mph (3-second gust) Vasd=95mph; TCDL=6.0psf; BCDL=6.0psf; h=25ft; B=45ft; L=36ft; eave=5ft; Cat. II; Exp B; Enclosed; MWFRS (directional) and C-C Exterior (2) 0-0-12 to 3-8-2, Interior (1) 3-8-2 to 12-1-7, Exterior (2) 12-1-7 to 17-2-13, Interior (1) 17-2-13 to 25-0-9, Exterior (2) 25-0-9 to 30-1-15, Interior (1) 30-1-15 to 37-0-8 zone; cantilever left and right exposed ; end vertical left and right exposed;C-C for members and forces & MWFRS for reactions shown; Lumber DOL=1.60 plate grip DOL=1.60
3) Provide adequate drainage to prevent water ponding.
4) This truss has been designed for a 10.0 psf bottom chord live load nonconcurrent with any other live loads.
5) * This truss has been designed for a live load of 20.0psf on the bottom chord in all areas where a rectangle 3-06-00 tall by 2-00-00 wide will fit between the bottom chord and any other members, with BCDL = 10.0psf.
6) Refer to girder(s) for truss to truss connections.
7) Provide mechanical connection (by others) of truss to bearing plate capable of withstanding 10 lb uplift at joint 1 and 36 lb uplift at joint 11.
8) This truss is designed in accordance with the 2015 International Residential Code sections R502.11.1 and R802.10.2 and referenced standard ANSI/TPI 1.
9) This truss design requires that a minimum of 7/16" structural wood sheathing be applied directly to the top chord and 1/2" gypsum sheetrock be applied directly to the bottom chord.
10) Graphical purlin representation does not depict the size or the orientation of the purlin along the top and/or bottom chord.

LOAD CASE(S) Standard

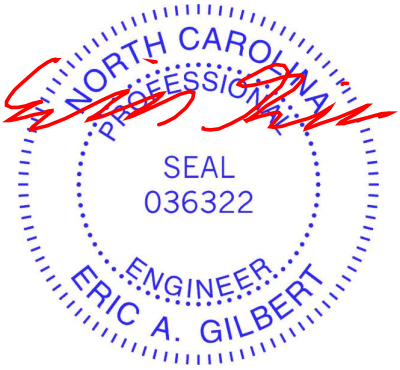

September 19,2022

ENGINEERING BY TRENCO A MiTek Affiliate
818 Soundside Road
Edenton, NC 27932

Job	Truss	Truss Type	Qty	Ply	Garman Homes - Wisteria A Roof
Q2200859	A04	Piggyback Base	4	1	I54261564 Job Reference (optional)

Carolina Structural Systems, LLC, Ether, NC - 27247, Run: 8.43 S Jan 6 2022 Print: 8.430 S Jan 6 2022 MiTek Industries, Inc. Mon Sep 19 07:39:19 Page: 1

ID:EwrCBda3GBUc0Pwo3EyT1LzCmoS-RfC?PsB70Hq3NSgPqnL8w3uITXbGKWrCDoi7J4zJC?f

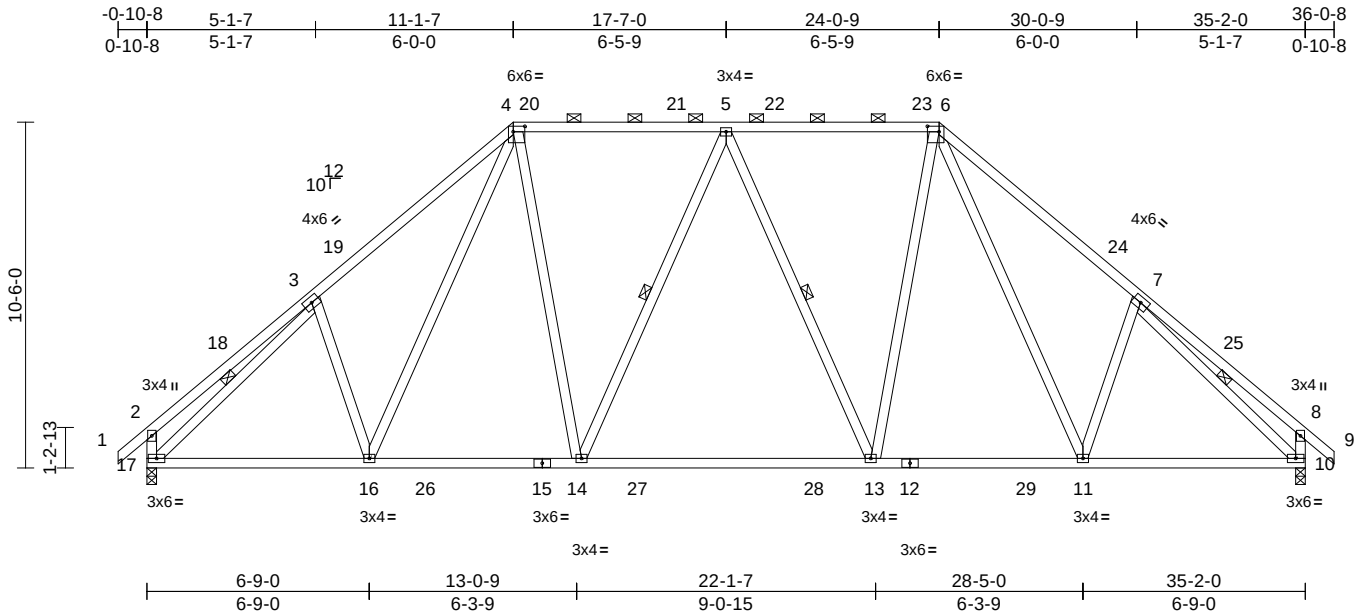

Scale = 1:70

Plate Offsets (X, Y): [4:0-4-4,0-2-0], [6:0-4-4,0-2-0]

Loading	(psf)	Spacing	2-0-0	CSI		DEFL	in	(loc)	l/defl	L/d	PLATES	GRIP
TCLL (roof)	20.0	Plate Grip DOL	1.00	TC	0.54	Vert(LL)	-0.23	13-14	>999	240	MT20	244/190
TCDL	10.0	Lumber DOL	1.15	BC	0.89	Vert(CT)	-0.41	13-14	>999	180		
BCLL	0.0*	Rep Stress Incr	YES	WB	0.44	Horz(CT)	0.07	10	n/a	n/a		
BCDL	10.0	Code	IRC2015/TPI2014	Matrix-AS							Weight: 251 lb	FT = 20%

LUMBER

TOP CHORD 2x4 SP No.2
BOT CHORD 2x4 SP No.2
WEBS 2x4 SP No.3 *Except* 10-8,17-2:2x4 SP No.2

BRACING

TOP CHORD Structural wood sheathing directly applied, except end verticals, and 2-0-0 oc purlins (4-11-12 max.): 4-6.
BOT CHORD Rigid ceiling directly applied.
WEBS 1 Row at midpt 5-13, 7-10, 5-14, 3-17

REACTIONS (size) 10=0-3-8, 17=0-3-8
Max Horiz 17=-221 (LC 10)
Max Uplift 10=-36 (LC 12), 17=-36 (LC 12)
Max Grav 10=1510 (LC 21), 17=1510 (LC 20)

FORCES (lb) - Maximum Compression/Maximum Tension
TOP CHORD 1-2=0/39, 2-3=-353/111, 3-4=-1715/259, 4-5=-1232/210, 5-6=-1232/210, 6-7=-1715/259, 7-8=-353/111, 8-9=0/39, 8-10=-370/132, 2-17=-370/132
BOT CHORD 16-17=-41/1368, 14-16=0/1216, 13-14=0/1356, 11-13=0/1155, 10-11=-20/1215
WEBS 5-13=-311/76, 6-13=0/561, 6-11=-97/327, 7-11=-197/174, 7-10=-1494/58, 5-14=-311/76, 4-14=0/561, 4-16=-97/327, 3-16=-197/174, 3-17=-1495/58

NOTES

1) Unbalanced roof live loads have been considered for this design.
2) Wind: ASCE 7-10; Vult=120mph (3-second gust) Vasd=95mph; TCDL=6.0psf; BCDL=6.0psf; h=25ft; B=45ft; L=35ft; eave=5ft; Cat. II; Exp B; Enclosed; MWFRS (directional) and C-C Exterior (2) 0-1-8 to 3-7-11, Interior (1) 3-7-11 to 12-1-7, Exterior (2) 12-1-7 to 17-1-2, Interior (1) 17-1-2 to 25-0-9, Exterior (2) 25-0-9 to 30-0-4, Interior (1) 30-0-4 to 37-0-8 zone; cantilever left and right exposed ; end vertical left and right exposed;C-C for members and forces & MWFRS for reactions shown; Lumber DOL=1.60 plate grip DOL=1.60
3) Provide adequate drainage to prevent water ponding.
4) This truss has been designed for a 10.0 psf bottom chord live load nonconcurrent with any other live loads.
5) * This truss has been designed for a live load of 20.0psf on the bottom chord in all areas where a rectangle 3-06-00 tall by 2-00-00 wide will fit between the bottom chord and any other members, with BCDL = 10.0psf.
6) Provide mechanical connection (by others) of truss to bearing plate capable of withstanding 36 lb uplift at joint 10 and 36 lb uplift at joint 17.
7) This truss is designed in accordance with the 2015 International Residential Code sections R502.11.1 and R802.10.2 and referenced standard ANSI/TPI 1.
8) This truss design requires that a minimum of 7/16" structural wood sheathing be applied directly to the top chord and 1/2" gypsum sheetrock be applied directly to the bottom chord.
9) Graphical purlin representation does not depict the size or the orientation of the purlin along the top and/or bottom chord.

LOAD CASE(S) Standard

September 19,2022

ENGINEERING BY TRENCO A MiTek Affiliate
818 Soundside Road
Edenton, NC 27932

Job	Truss	Truss Type	Qty	Ply	Garman Homes - Wisteria A Roof
Q2200859	A05	Piggyback Base Supported Gable	1	1	I54261565 Job Reference (optional)

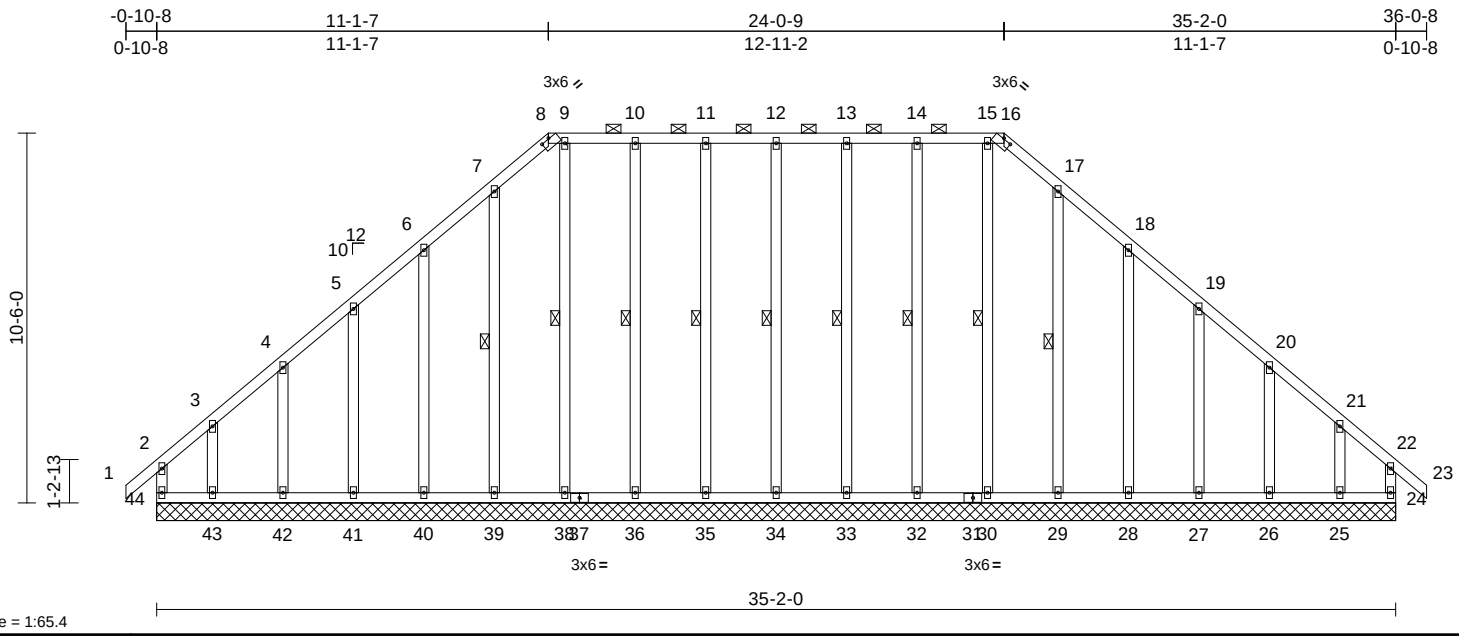

Scale = 1:65.4

Plate Offsets (X, Y): [8:0-3-0,0-0-4], [16:0-3-0,0-0-4]

Loading	(psf)	Spacing	2-0-0	CSI		DEFL	in	(loc)	l/defl	L/d	PLATES	GRIP
TCLL (roof)	20.0	Plate Grip DOL	1.00	TC	0.11	Vert(LL)	n/a	-	n/a	999	MT20	244/190
TCDL	10.0	Lumber DOL	1.15	BC	0.11	Vert(CT)	n/a	-	n/a	999		
BCLL	0.0*	Rep Stress Incr	YES	WB	0.14	Horz(CT)	-0.01	24	n/a	n/a		
BCDL	10.0	Code	IRC2015/TPI2014	Matrix-AS							Weight: 304 lb	FT = 20%

LUMBER

TOP CHORD 2x4 SP No.2
BOT CHORD 2x4 SP No.2
WEBS 2x4 SP No.2
OTHERS 2x4 SP No.3

BRACING

TOP CHORD Structural wood sheathing directly applied, except end verticals, and 2-0-0 oc purlins (6-0-0 max.): 8-16.
BOT CHORD Rigid ceiling directly applied.
WEBS 1 Row at midpt 12-34, 11-35, 10-36, 9-38, 7-39, 13-33, 14-32, 15-30, 17-29

REACTIONS (size) 24=35-2-0, 25=35-2-0, 26=35-2-0, 27=35-2-0, 28=35-2-0, 29=35-2-0, 30=35-2-0, 32=35-2-0, 33=35-2-0, 34=35-2-0, 35=35-2-0, 36=35-2-0, 38=35-2-0, 39=35-2-0, 40=35-2-0, 41=35-2-0, 42=35-2-0, 43=35-2-0, 44=35-2-0
Max Horiz 44=-221 (LC 10)
Max Uplift 24=-66 (LC 11), 25=-83 (LC 8), 26=-28 (LC 12), 27=-35 (LC 12), 28=-46 (LC 12), 32=-11 (LC 12), 33=-1 (LC 12), 34=-1 (LC 12), 35=-1 (LC 12), 36=-11 (LC 12), 40=-46 (LC 12), 41=-35 (LC 12), 42=-28 (LC 12), 43=-96 (LC 9), 44=-118 (LC 10)
Max Grav 24=192 (LC 20), 25=196 (LC 21), 26=168 (LC 25), 27=169 (LC 21), 28=169 (LC 21), 29=163 (LC 21), 30=159 (LC 1), 32=164 (LC 24), 33=160 (LC 25), 34=160 (LC 24), 35=160 (LC 24), 36=164 (LC 25), 38=159 (LC 1), 39=168 (LC 20), 40=168 (LC 20), 41=170 (LC 20), 42=168 (LC 24), 43=218 (LC 20), 44=231 (LC 21)

FORCES (lb) - Maximum Compression/Maximum Tension

TOP CHORD 1-2=0/39, 2-3=-170/165, 3-4=-122/115, 4-5=-110/95, 5-6=-135/160, 6-7=-198/235, 7-8=-230/269, 8-9=-193/237, 9-10=-193/237, 10-11=-193/237, 11-12=-193/237, 12-13=-193/237, 13-14=-193/237, 14-15=-193/237, 15-16=-193/237, 16-17=-230/269, 17-18=-198/235, 18-19=-135/160, 19-20=-80/94, 20-21=-82/79, 21-22=-122/116, 22-23=0/39, 22-24=-149/39, 2-44=-178/78
BOT CHORD 43-44=-100/98, 42-43=-100/98, 41-42=-100/98, 40-41=-100/98, 39-40=-100/98, 38-39=-100/98, 36-38=-100/98, 35-36=-100/98, 34-35=-100/98, 33-34=-100/98, 32-33=-100/98, 30-32=-100/98, 29-30=-100/98, 28-29=-100/98, 27-28=-100/98, 26-27=-100/98, 25-26=-100/98, 24-25=-100/98
WEBS 12-34=-120/43, 11-35=-120/44, 10-36=-124/56, 9-38=-119/61, 7-39=-128/34, 6-40=-139/95, 5-41=-128/80, 4-42=-128/81, 3-43=-140/105, 13-33=-120/44, 14-32=-124/56, 15-30=-119/61, 17-29=-123/34, 18-28=-139/95, 19-27=-128/79, 20-26=-129/81, 21-25=-139/103

NOTES

1) Unbalanced roof live loads have been considered for this design.
2) Wind: ASCE 7-10; Vult=120mph (3-second gust) Vasd=95mph; TCDL=6.0psf; BCDL=6.0psf; h=25ft; B=45ft; L=35ft; eave=2ft; Cat. II; Exp B; Enclosed; MWFRS (directional) and C-C Corner (3) 0-1-8 to 3-7-11, Exterior (2) 3-7-11 to 12-1-7, Corner (3) 12-1-7 to 15-7-10, Exterior (2) 15-7-10 to 25-0-9, Corner (3) 25-0-9 to 28-7-0, Exterior (2) 28-7-0 to 37-0-8 zone; cantilever left and right exposed ; end vertical left and right exposed;C-C for members and forces & MWFRS for reactions shown; Lumber DOL=1.60 plate grip DOL=1.60
3) Truss designed for wind loads in the plane of the truss only. For studs exposed to wind (normal to the face), see Standard Industry Gable End Details as applicable, or consult qualified building designer as per ANSI/TPI 1.
4) Provide adequate drainage to prevent water ponding.
5) All plates are 2x4 MT20 unless otherwise indicated.
6) Gable requires continuous bottom chord bearing.
7) Truss to be fully sheathed from one face or securely braced against lateral movement (i.e. diagonal web).

NORTH CAROLINA PROFESSIONAL SEAL 036322 ENGINEER ERIC A. GILBERT

September 19,2022

Continued on page 2

ENGINEERING BY TRENCO A MiTek Affiliate
818 Soundside Road
Edenton, NC 27932

8) Gable studs spaced at 2-0-0 oc.
9) This truss has been designed for a 10.0 psf bottom chord live load nonconcurrent with any other live loads.
10) * This truss has been designed for a live load of 20.0psf on the bottom chord in all areas where a rectangle 3-06-00 tall by 2-00-00 wide will fit between the bottom chord and any other members.
11) Provide mechanical connection (by others) of truss to bearing plate capable of withstanding 66 lb uplift at joint 24, 118 lb uplift at joint 44, 1 lb uplift at joint 34, 1 lb uplift at joint 35, 11 lb uplift at joint 36, 46 lb uplift at joint 40, 35 lb uplift at joint 41, 28 lb uplift at joint 42, 99 lb uplift at joint 43, 1 lb uplift at joint 33, 11 lb uplift at joint 32, 46 lb uplift at joint 28, 35 lb uplift at joint 27, 28 lb uplift at joint 26 and 83 lb uplift at joint 25.
12) This truss is designed in accordance with the 2015 International Residential Code sections R502.11.1 and R802.10.2 and referenced standard ANSI/TPI 1.
13) This truss design requires that a minimum of 7/16" structural wood sheathing be applied directly to the top chord and 1/2" gypsum sheetrock be applied directly to the bottom chord.
14) Graphical purlin representation does not depict the size or the orientation of the purlin along the top and/or bottom chord.

LOAD CASE(S) Standard

Job	Truss	Truss Type	Qty	Ply	Garman Homes - Wisteria A Roof
Q2200859	B01	Common Supported Gable	1	1	I54261566 Job Reference (optional)

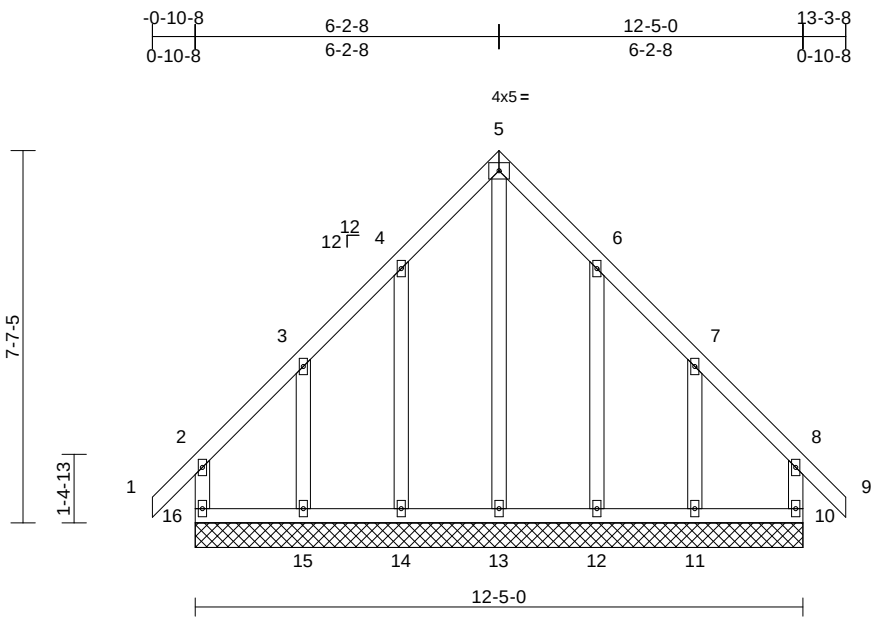

Scale = 1:47.1

Loading	(psf)	Spacing	2-0-0	CSI		DEFL	in	(loc)	l/defl	L/d	PLATES	GRIP
TCLL (roof)	20.0	Plate Grip DOL	1.00	TC	0.08	Vert(LL)	n/a	-	n/a	999	MT20	244/190
TCDL	10.0	Lumber DOL	1.15	BC	0.09	Vert(CT)	n/a	-	n/a	999		
BCLL	0.0*	Rep Stress Incr	YES	WB	0.30	Horz(CT)	0.00	10	n/a	n/a		
BCDL	10.0	Code	IRC2015/TPI2014	Matrix-MR							Weight: 86 lb	FT = 20%

LUMBER

TOP CHORD 2x4 SP No.2
BOT CHORD 2x4 SP No.2
WEBS 2x4 SP No.2
OTHERS 2x4 SP No.3

BRACING

TOP CHORD Structural wood sheathing directly applied or 6-0-0 oc purlins, except end verticals.
BOT CHORD Rigid ceiling directly applied or 10-0-0 oc bracing.

REACTIONS (size) 10=12-5-0, 11=12-5-0, 12=12-5-0, 13=12-5-0, 14=12-5-0, 15=12-5-0, 16=12-5-0
Max Horiz 16=-169 (LC 10)
Max Uplift 10=-60 (LC 9), 11=-72 (LC 8), 12=-39 (LC 12), 14=-39 (LC 12), 15=-75 (LC 9), 16=-66 (LC 8)
Max Grav 10=185 (LC 17), 11=222 (LC 18), 12=169 (LC 22), 13=270 (LC 12), 14=169 (LC 21), 15=226 (LC 17), 16=192 (LC 18)

FORCES (lb) - Maximum Compression/Maximum Tension
TOP CHORD 2-16=-154/102, 1-2=0/43, 2-3=-114/98, 3-4=-127/166, 4-5=-199/252, 5-6=-198/251, 6-7=-128/168, 7-8=-107/90, 8-9=0/43, 8-10=-148/100
BOT CHORD 15-16=-83/80, 14-15=-83/80, 13-14=-83/80, 12-13=-83/80, 11-12=-83/80, 10-11=-83/80
WEBS 5-13=-298/167, 4-14=-142/98, 3-15=-169/129, 6-12=-141/98, 7-11=-168/128

NOTES

1) Unbalanced roof live loads have been considered for this design.
2) Wind: ASCE 7-10; Vult=120mph (3-second gust) Vasd=95mph; TCDL=6.0psf; BCDL=6.0psf; h=25ft; B=45ft; L=24ft; eave=2ft; Cat. II; Exp B; Enclosed; MWFRS (directional) and C-C Corner (3) -0-10-8 to 2-2-8, Exterior (2) 2-2-8 to 6-2-8, Corner (3) 6-2-8 to 9-2-8, Exterior (2) 9-2-8 to 13-3-8 zone; cantilever left and right exposed ; end vertical left and right exposed;C-C for members and forces & MWFRS for reactions shown; Lumber DOL=1.60 plate grip DOL=1.60
3) Truss designed for wind loads in the plane of the truss only. For studs exposed to wind (normal to the face), see Standard Industry Gable End Details as applicable, or consult qualified building designer as per ANSI/TPI 1.
4) All plates are 2x4 MT20 unless otherwise indicated.
5) Gable requires continuous bottom chord bearing.
6) Truss to be fully sheathed from one face or securely braced against lateral movement (i.e. diagonal web).
7) Gable studs spaced at 2-0-0 oc.
8) This truss has been designed for a 10.0 psf bottom chord live load nonconcurrent with any other live loads.
9) * This truss has been designed for a live load of 20.0psf on the bottom chord in all areas where a rectangle 3-06-00 tall by 2-00-00 wide will fit between the bottom chord and any other members.
10) Provide mechanical connection (by others) of truss to bearing plate capable of withstanding 66 lb uplift at joint 16, 60 lb uplift at joint 10, 39 lb uplift at joint 14, 75 lb uplift at joint 15, 39 lb uplift at joint 12 and 72 lb uplift at joint 11.
11) This truss is designed in accordance with the 2015 International Residential Code sections R502.11.1 and R802.10.2 and referenced standard ANSI/TPI 1.

LOAD CASE(S) Standard

September 19,2022

ENGINEERING BY TRENCO A MiTek Affiliate
818 Soundside Road
Edenton, NC 27932

Job	Truss	Truss Type	Qty	Ply	Garman Homes - Wisteria A Roof
Q2200859	B02	Common	1	1	I54261567 Job Reference (optional)

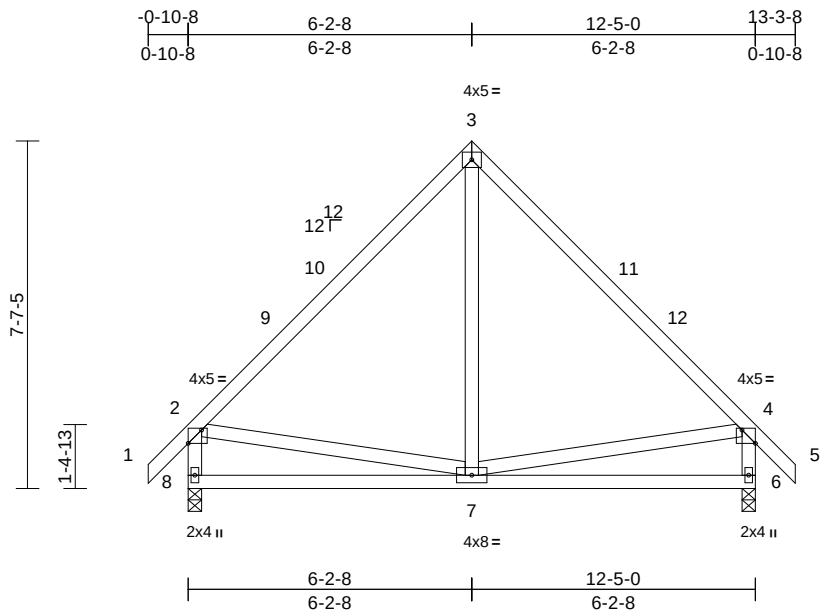

Scale = 1:50.4

Plate Offsets (X, Y): [2:0-3-8,Edge], [4:0-3-8,Edge]

Loading	(psf)	Spacing	2-0-0	CSI		DEFL	in	(loc)	l/defl	L/d	PLATES	GRIP
TCLL (roof)	20.0	Plate Grip DOL	1.00	TC	0.45	Vert(LL)	-0.03	6-7	>999	240	MT20	244/190
TCDL	10.0	Lumber DOL	1.15	BC	0.33	Vert(CT)	-0.06	6-7	>999	180		
BCLL	0.0*	Rep Stress Incr	YES	WB	0.09	Horz(CT)	0.00	6	n/a	n/a		
BCDL	10.0	Code	IRC2015/TPI2014	Matrix-MS							Weight: 80 lb	FT = 20%

LUMBER
TOP CHORD 2x4 SP No.2
BOT CHORD 2x4 SP No.2
WEBS 2x4 SP No.3 *Except* 8-2,6-4:2x4 SP No.2

BRACING
TOP CHORD Structural wood sheathing directly applied or 6-0-0 oc purlins, except end verticals.
BOT CHORD Rigid ceiling directly applied or 10-0-0 oc bracing.

REACTIONS (size) 6=0-3-8, 8=0-3-8
Max Horiz 8=-169 (LC 10)
Max Uplift 6=-29 (LC 12), 8=-29 (LC 12)
Max Grav 6=546 (LC 1), 8=546 (LC 1)

FORCES (lb) - Maximum Compression/Maximum Tension
TOP CHORD 1-2=0/43, 2-3=-453/90, 3-4=-453/90, 4-5=0/43, 2-8=-492/112, 4-6=-492/112
BOT CHORD 7-8=-140/295, 6-7=-82/231
WEBS 3-7=0/242, 2-7=-97/195, 4-7=-99/195

NOTES
1) Unbalanced roof live loads have been considered for this design.
2) Wind: ASCE 7-10; Vult=120mph (3-second gust) Vasd=95mph; TCDL=6.0psf; BCDL=6.0psf; h=25ft; B=45ft; L=24ft; eave=4ft; Cat. II; Exp B; Enclosed; MWFRS (directional) and C-C Exterior (2) -0-10-8 to 2-1-8, Interior (1) 2-1-8 to 6-2-8, Exterior (2) 6-2-8 to 9-2-8, Interior (1) 9-2-8 to 13-3-8 zone; cantilever left and right exposed ; end vertical left and right exposed;C-C for members and forces & MWFRS for reactions shown; Lumber DOL=1.60 plate grip DOL=1.60
3) This truss has been designed for a 10.0 psf bottom chord live load nonconcurrent with any other live loads.
4) * This truss has been designed for a live load of 20.0psf on the bottom chord in all areas where a rectangle 3-06-00 tall by 2-00-00 wide will fit between the bottom chord and any other members.
5) Provide mechanical connection (by others) of truss to bearing plate capable of withstanding 29 lb uplift at joint 8 and 29 lb uplift at joint 6.
6) This truss is designed in accordance with the 2015 International Residential Code sections R502.11.1 and R802.10.2 and referenced standard ANSI/TPI 1.

LOAD CASE(S) Standard

September 19,2022

ENGINEERING BY TRENCO A MiTek Affiliate
818 Soundside Road
Edenton, NC 27932

Job	Truss	Truss Type	Qty	Ply	Garman Homes - Wisteria A Roof
Q2200859	B03	Common Girder	1	3	I54261568 Job Reference (optional)

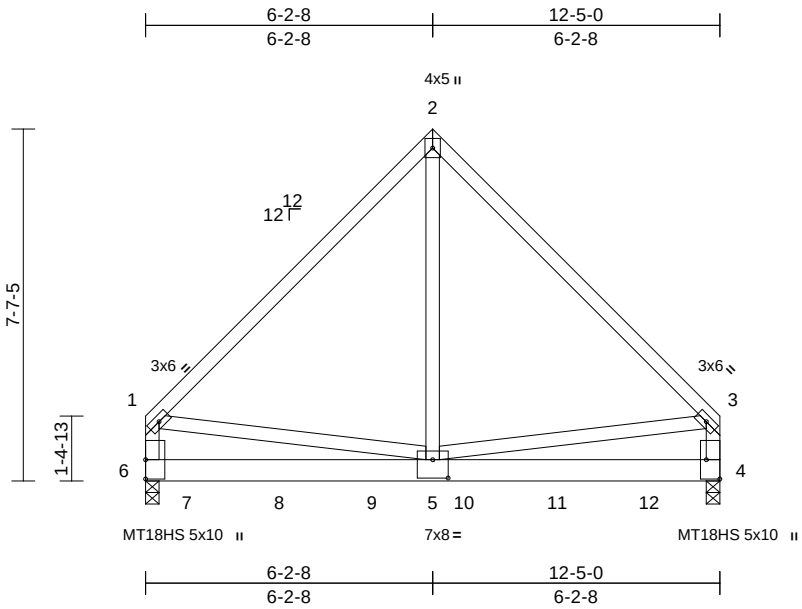

Scale = 1:49.8

Plate Offsets (X, Y): [4:Edge,0-3-8], [5:0-4-0,0-4-12]

Loading	(psf)	Spacing	2-0-0	CSI		DEFL	in	(loc)	l/defl	L/d	PLATES	GRIP
TCLL (roof)	20.0	Plate Grip DOL	1.00	TC	0.95	Vert(LL)	-0.05	5-6	>999	240	MT20	244/190
TCDL	10.0	Lumber DOL	1.15	BC	0.80	Vert(CT)	-0.11	5-6	>999	180	MT18HS	244/190
BCLL	0.0*	Rep Stress Incr	NO	WB	0.63	Horz(CT)	0.00	4	n/a	n/a		
BCDL	10.0	Code	IRC2015/TPI2014	Matrix-MS							Weight: 257 lb	FT = 20%

LUMBER
TOP CHORD 2x4 SP No.2
BOT CHORD 2x6 SP No.1
WEBS 2x4 SP No.3

BRACING
TOP CHORD Structural wood sheathing directly applied or 6-0-0 oc purlins, except end verticals.
BOT CHORD Rigid ceiling directly applied or 10-0-0 oc bracing.

REACTIONS (size) 4=0-3-8, 6=0-3-8
Max Horiz 6=-147 (LC 6)
Max Uplift 4=-67 (LC 8), 6=-73 (LC 8)
Max Grav 4=4655 (LC 13), 6=5115 (LC 14)

FORCES (lb) - Maximum Compression/Maximum Tension
TOP CHORD 1-2=-3702/100, 2-3=-3702/100, 1-6=-3013/72, 3-4=-3017/72
BOT CHORD 5-6=-140/871, 4-5=-52/746
WEBS 2-5=-26/4741, 1-5=-26/1882, 3-5=-28/1902

NOTES
1) 3-ply truss to be connected together with 10d (0.131"x3") nails as follows:
Top chords connected as follows: 2x4 - 1 row at 0-9-0 oc.
Bottom chords connected as follows: 2x6 - 3 rows staggered at 0-7-0 oc.
Web connected as follows: 2x4 - 1 row at 0-9-0 oc.
2) All loads are considered equally applied to all plies, except if noted as front (F) or back (B) face in the LOAD CASE(S) section. Ply to ply connections have been provided to distribute only loads noted as (F) or (B), unless otherwise indicated.
3) Unbalanced roof live loads have been considered for this design.
4) Wind: ASCE 7-10; Vult=120mph (3-second gust) Vasd=95mph; TCDL=6.0psf; BCDL=6.0psf; h=25ft; B=45ft; L=24ft; eave=4ft; Cat. II; Exp B; Enclosed; MWFRS (directional); cantilever left and right exposed ; end vertical left and right exposed; Lumber DOL=1.60 plate grip DOL=1.60
5) All plates are MT20 plates unless otherwise indicated.
6) This truss has been designed for a 10.0 psf bottom chord live load nonconcurrent with any other live loads.
7) * This truss has been designed for a live load of 20.0psf on the bottom chord in all areas where a rectangle 3-06-00 tall by 2-00-00 wide will fit between the bottom chord and any other members.
8) Provide mechanical connection (by others) of truss to bearing plate capable of withstanding 73 lb uplift at joint 6 and 67 lb uplift at joint 4.
9) This truss is designed in accordance with the 2015 International Residential Code sections R502.11.1 and R802.10.2 and referenced standard ANSI/TPI 1.
10) Hanger(s) or other connection device(s) shall be provided sufficient to support concentrated load(s) 1484 lb down and 21 lb up at 0-10-12, 1481 lb down and 22 lb up at 2-10-12, 1481 lb down and 22 lb up at 4-10-12, 1481 lb down and 22 lb up at 6-10-12, and 1481 lb down and 22 lb up at 8-10-12, and 1481 lb down and 22 lb up at 10-10-12 on bottom chord. The design/selection of such connection device(s) is the responsibility of others.

LOAD CASE(S) Standard
1) Dead + Roof Live (balanced): Lumber Increase=1.15, Plate Increase=1.00
Uniform Loads (lb/ft)
Vert: 1-2=-60, 2-3=-60, 4-6=-20
Concentrated Loads (lb)
Vert: 7=-1420 (B), 8=-1417 (B), 9=-1417 (B), 10=-1417 (B), 11=-1417 (B), 12=-1417 (B)

September 19,2022

ENGINEERING BY TRENCO A MiTek Affiliate
818 Soundside Road
Edenton, NC 27932

Job	Truss	Truss Type	Qty	Ply	Garman Homes - Wisteria A Roof
Q2200859	C01	Monopitch Structural Gable	1	1	I54261569 Job Reference (optional)

Carolina Structural Systems, LLC, Ether, NC - 27247, Run: 8.43 S Jan 6 2022 Print: 8.430 S Jan 6 2022 MiTek Industries, Inc. Mon Sep 19 07:39:21 Page: 1
ID:r7kjN?Y4qkoXfLoAD3i?dOzCoI1-RfC?PsB70Hq3NSgPqnL8w3uITXbGKWrCDoi7J4zJC?f

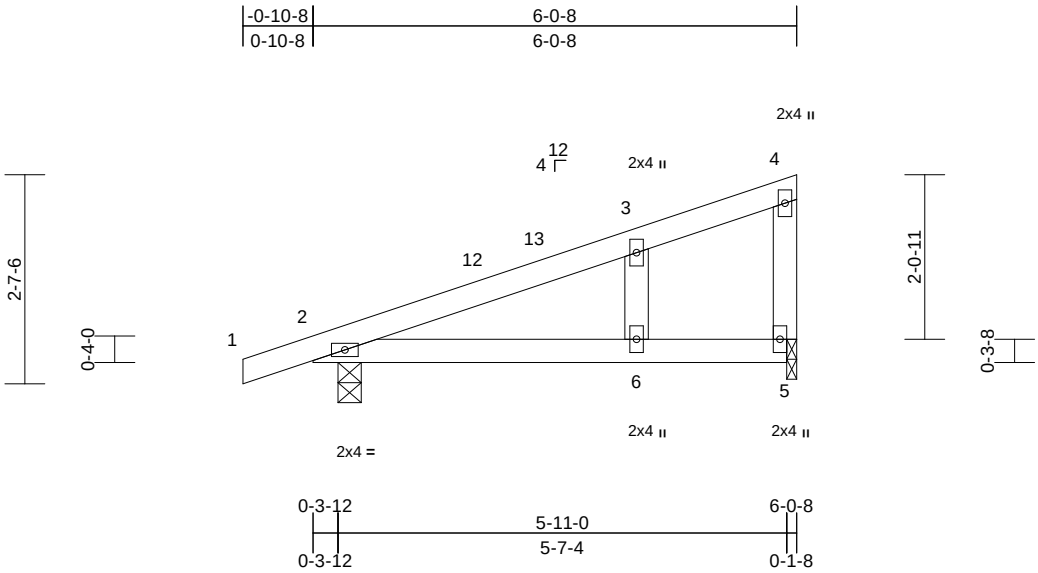

Scale = 1:28.8

Loading	(psf)	Spacing	2-0-0	CSI		DEFL	in	(loc)	l/defl	L/d	PLATES	GRIP
TCLL (roof)	20.0	Plate Grip DOL	1.00	TC	0.35	Vert(LL)	-0.05	6-11	>999	240	MT20	244/190
TCDL	10.0	Lumber DOL	1.15	BC	0.37	Vert(CT)	-0.11	6-11	>668	180		
BCLL	0.0*	Rep Stress Incr	YES	WB	0.02	Horz(CT)	0.00	2	n/a	n/a		
BCDL	10.0	Code	IRC2015/TPI2014	Matrix-AS							Weight: 24 lb	FT = 20%

LUMBER
TOP CHORD 2x4 SP No.2
BOT CHORD 2x4 SP No.2
OTHERS 2x4 SP No.2 *Except* 6-3:2x4 SP No.3

BRACING
TOP CHORD Structural wood sheathing directly applied.
BOT CHORD Rigid ceiling directly applied.

REACTIONS (size) 2=0-3-8, 5=0-1-8
Max Horiz 2=63 (LC 11)
Max Uplift 2=-22 (LC 12)
Max Grav 2=313 (LC 1), 5=218 (LC 1)

FORCES (lb) - Maximum Compression/Maximum Tension
TOP CHORD 1-2=0/17, 2-3=-79/79, 3-4=-45/52, 4-5=-121/58
BOT CHORD 2-6=-82/80, 5-6=-31/33
WEBS 3-6=-58/68

NOTES
1) Wind: ASCE 7-10; Vult=120mph (3-second gust) Vasd=95mph; TCDL=6.0psf; BCDL=6.0psf; h=25ft; B=45ft; L=24ft; eave=4ft; Cat. II; Exp B; Enclosed; MWFRS (directional) and C-C Exterior (2) -0-10-8 to 2-1-8, Interior (1) 2-1-8 to 5-10-12 zone; cantilever left and right exposed ; end vertical left and right exposed;C-C for members and forces & MWFRS for reactions shown; Lumber DOL=1.60 plate grip DOL=1.60
2) Truss designed for wind loads in the plane of the truss only. For studs exposed to wind (normal to the face), see Standard Industry Gable End Details as applicable, or consult qualified building designer as per ANSI/TPI 1.
3) Gable studs spaced at 2-0-0 oc.
4) This truss has been designed for a 10.0 psf bottom chord live load nonconcurrent with any other live loads.
5) * This truss has been designed for a live load of 20.0psf on the bottom chord in all areas where a rectangle 3-06-00 tall by 2-00-00 wide will fit between the bottom chord and any other members.
6) Bearing at joint(s) 5 considers parallel to grain value using ANSI/TPI 1 angle to grain formula. Building designer should verify capacity of bearing surface.
7) Provide mechanical connection (by others) of truss to bearing plate at joint(s) 5.
8) Provide mechanical connection (by others) of truss to bearing plate capable of withstanding 22 lb uplift at joint 2.
9) This truss is designed in accordance with the 2015 International Residential Code sections R502.11.1 and R802.10.2 and referenced standard ANSI/TPI 1.
10) This truss design requires that a minimum of 7/16" structural wood sheathing be applied directly to the top chord and 1/2" gypsum sheetrock be applied directly to the bottom chord.

LOAD CASE(S) Standard

September 19,2022

ENGINEERING BY TRENCO A MiTek Affiliate
818 Soundside Road
Edenton, NC 27932

Job	Truss	Truss Type	Qty	Ply	Garman Homes - Wisteria A Roof
Q2200859	C02	Monopitch	6	1	I54261570 Job Reference (optional)

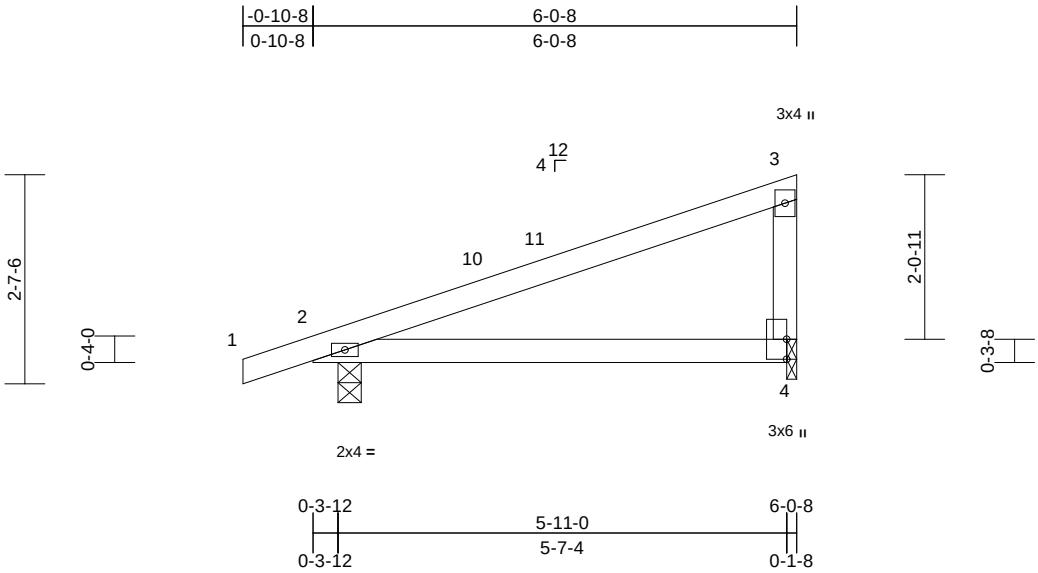

Scale = 1:28.8

Loading	(psf)	Spacing	2-0-0	CSI		DEFL	in	(loc)	l/defl	L/d	PLATES	GRIP
TCLL (roof)	20.0	Plate Grip DOL	1.00	TC	0.38	Vert(LL)	-0.02	4-9	>999	240	MT20	244/190
TCDL	10.0	Lumber DOL	1.15	BC	0.23	Vert(CT)	-0.04	4-9	>999	180		
BCLL	0.0*	Rep Stress Incr	YES	WB	0.00	Horz(CT)	0.00	4	n/a	n/a		
BCDL	10.0	Code	IRC2015/TPI2014	Matrix-AS							Weight: 22 lb	FT = 20%

LUMBER
TOP CHORD 2x4 SP No.2
BOT CHORD 2x4 SP No.2
OTHERS 2x4 SP No.2

BRACING
TOP CHORD Structural wood sheathing directly applied.
BOT CHORD Rigid ceiling directly applied.

REACTIONS (size) 2=0-3-8, 4=0-1-8
Max Horiz 2=98 (LC 12)
Max Uplift 2=-9 (LC 12), 4=-12 (LC 12)
Max Grav 2=313 (LC 1), 4=218 (LC 1)

FORCES (lb) - Maximum Compression/Maximum Tension
TOP CHORD 1-2=0/17, 2-3=-170/79, 3-4=-137/97
BOT CHORD 2-4=-77/125

NOTES
1) Wind: ASCE 7-10; Vult=120mph (3-second gust) Vasd=95mph; TCDL=6.0psf; BCDL=6.0psf; h=25ft; B=45ft; L=24ft; eave=4ft; Cat. II; Exp B; Enclosed; MWFRS (directional) and C-C Exterior (2) -0-10-8 to 2-1-8, Interior (1) 2-1-8 to 5-10-12 zone; cantilever left and right exposed ; end vertical left and right exposed;C-C for members and forces & MWFRS for reactions shown; Lumber DOL=1.60 plate grip DOL=1.60
2) This truss has been designed for a 10.0 psf bottom chord live load nonconcurrent with any other live loads.
3) * This truss has been designed for a live load of 20.0psf on the bottom chord in all areas where a rectangle 3-06-00 tall by 2-00-00 wide will fit between the bottom chord and any other members.
4) Bearing at joint(s) 4 considers parallel to grain value using ANSI/TPI 1 angle to grain formula. Building designer should verify capacity of bearing surface.
5) Provide mechanical connection (by others) of truss to bearing plate at joint(s) 4.
6) Provide mechanical connection (by others) of truss to bearing plate capable of withstanding 9 lb uplift at joint 2 and 12 lb uplift at joint 4.
7) This truss is designed in accordance with the 2015 International Residential Code sections R502.11.1 and R802.10.2 and referenced standard ANSI/TPI 1.
8) This truss design requires that a minimum of 7/16" structural wood sheathing be applied directly to the top chord and 1/2" gypsum sheetrock be applied directly to the bottom chord.

LOAD CASE(S) Standard

September 19,2022

ENGINEERING BY TRENCO A MiTek Affiliate
818 Soundside Road
Edenton, NC 27932

Job	Truss	Truss Type	Qty	Ply	Garman Homes - Wisteria A Roof
Q2200859	C03	Monopitch	6	1	I54261571 Job Reference (optional)

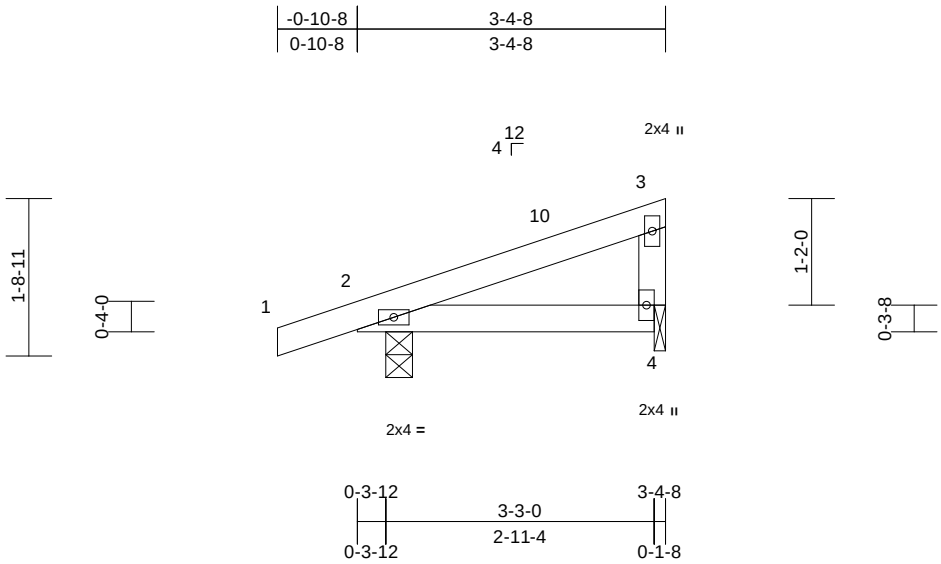

Scale = 1:25.2

Loading	(psf)	Spacing	2-0-0	CSI		DEFL	in	(loc)	l/defl	L/d	PLATES	GRIP
TCLL (roof)	20.0	Plate Grip DOL	1.00	TC	0.08	Vert(LL)	0.00	4-9	>999	240	MT20	244/190
TCDL	10.0	Lumber DOL	1.15	BC	0.06	Vert(CT)	0.00	4-9	>999	180		
BCLL	0.0*	Rep Stress Incr	YES	WB	0.00	Horz(CT)	0.00	4	n/a	n/a		
BCDL	10.0	Code	IRC2015/TPI2014	Matrix-MR							Weight: 13 lb	FT = 20%

LUMBER
TOP CHORD 2x4 SP No.2
BOT CHORD 2x4 SP No.2
OTHERS 2x4 SP No.2

BRACING
TOP CHORD Structural wood sheathing directly applied or 3-4-8 oc purlins.
BOT CHORD Rigid ceiling directly applied or 10-0-0 oc bracing.

REACTIONS (size) 2=0-3-8, 4=0-1-8
Max Horiz 2=59 (LC 12)
Max Uplift 2=-18 (LC 12), 4=-3 (LC 12)
Max Grav 2=212 (LC 1), 4=103 (LC 1)

FORCES (lb) - Maximum Compression/Maximum Tension
TOP CHORD 1-2=0/17, 2-3=-70/83, 3-4=-66/53
BOT CHORD 2-4=-78/74

NOTES
1) Wind: ASCE 7-10; Vult=120mph (3-second gust) Vasd=95mph; TCDL=6.0psf; BCDL=6.0psf; h=25ft; B=45ft; L=24ft; eave=4ft; Cat. II; Exp B; Enclosed; MWFRS (directional) and C-C Exterior (2) -0-10-8 to 2-1-8, Interior (1) 2-1-8 to 3-2-12 zone; cantilever left and right exposed ; end vertical left and right exposed;C-C for members and forces & MWFRS for reactions shown; Lumber DOL=1.60 plate grip DOL=1.60
2) This truss has been designed for a 10.0 psf bottom chord live load nonconcurrent with any other live loads.
3) * This truss has been designed for a live load of 20.0psf on the bottom chord in all areas where a rectangle 3-06-00 tall by 2-00-00 wide will fit between the bottom chord and any other members.
4) Bearing at joint(s) 4 considers parallel to grain value using ANSI/TPI 1 angle to grain formula. Building designer should verify capacity of bearing surface.
5) Provide mechanical connection (by others) of truss to bearing plate at joint(s) 4.
6) Provide mechanical connection (by others) of truss to bearing plate capable of withstanding 18 lb uplift at joint 2 and 3 lb uplift at joint 4.
7) This truss is designed in accordance with the 2015 International Residential Code sections R502.11.1 and R802.10.2 and referenced standard ANSI/TPI 1.

LOAD CASE(S) Standard

September 19,2022

ENGINEERING BY TRENCO A MiTek Affiliate
818 Soundside Road
Edenton, NC 27932

Job	Truss	Truss Type	Qty	Ply	Garman Homes - Wisteria A Roof
Q2200859	C04	Monopitch	4	1	I54261572 Job Reference (optional)

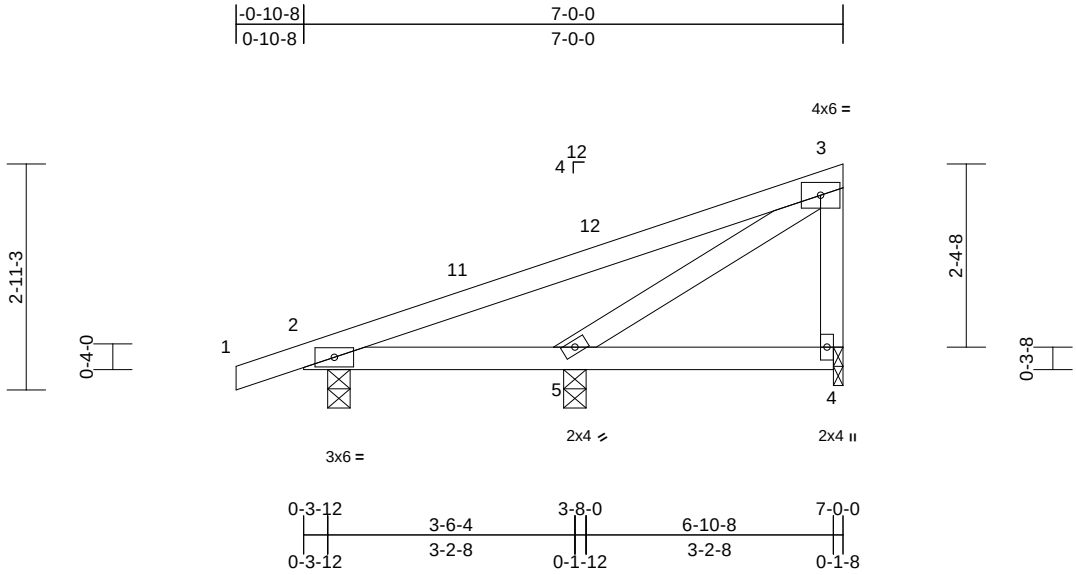

Scale = 1:29.9

Loading	(psf)	Spacing	2-0-0	CSI		DEFL	in	(loc)	l/defl	L/d	PLATES	GRIP
TCLL (roof)	20.0	Plate Grip DOL	1.00	TC	0.44	Vert(LL)	-0.02	5-10	>999	240	MT20	244/190
TCDL	10.0	Lumber DOL	1.15	BC	0.51	Vert(CT)	-0.02	5-10	>999	180		
BCLL	0.0*	Rep Stress Incr	YES	WB	0.07	Horz(CT)	0.00	2	n/a	n/a		
BCDL	10.0	Code	IRC2015/TPI2014	Matrix-AS							Weight: 32 lb	FT = 20%

LUMBER

TOP CHORD	2x4 SP No.2
BOT CHORD	2x4 SP No.2
WEBS	2x4 SP No.3
OTHERS	2x4 SP No.2

BRACING

TOP CHORD	Structural wood sheathing directly applied.
BOT CHORD	Rigid ceiling directly applied.

REACTIONS (size) 2=0-3-8, 4=0-1-8, 5=0-3-8
Max Horiz 2=72 (LC 11)
Max Uplift 2=-45 (LC 12), 4=-19 (LC 12)
Max Grav 2=295 (LC 1), 4=212 (LC 1), 5=163 (LC 3)

FORCES (lb) - Maximum Compression/Maximum Tension

TOP CHORD	1-2=0/17, 2-3=-218/81, 3-4=-198/125
BOT CHORD	2-5=-113/142, 4-5=-35/38
WEBS	3-5=-106/169

NOTES

1) Wind: ASCE 7-10; Vult=120mph (3-second gust) Vasd=95mph; TCDL=6.0psf; BCDL=6.0psf; h=25ft; B=45ft; L=24ft; eave=4ft; Cat. II; Exp B; Enclosed; MWFRS (directional) and C-C Exterior (2) -0-10-8 to 2-1-8, Interior (1) 2-1-8 to 6-10-4 zone; cantilever left and right exposed ; end vertical left and right exposed;C-C for members and forces & MWFRS for reactions shown; Lumber DOL=1.60 plate grip DOL=1.60
2) This truss has been designed for a 10.0 psf bottom chord live load nonconcurrent with any other live loads.
3) * This truss has been designed for a live load of 20.0psf on the bottom chord in all areas where a rectangle 3-06-00 tall by 2-00-00 wide will fit between the bottom chord and any other members.
4) Bearing at joint(s) 4 considers parallel to grain value using ANSI/TPI 1 angle to grain formula. Building designer should verify capacity of bearing surface.
5) Provide mechanical connection (by others) of truss to bearing plate at joint(s) 4.
6) Provide mechanical connection (by others) of truss to bearing plate capable of withstanding 45 lb uplift at joint 2 and 19 lb uplift at joint 4.
7) This truss is designed in accordance with the 2015 International Residential Code sections R502.11.1 and R802.10.2 and referenced standard ANSI/TPI 1.
8) This truss design requires that a minimum of 7/16" structural wood sheathing be applied directly to the top chord and 1/2" gypsum sheetrock be applied directly to the bottom chord.

LOAD CASE(S) Standard

September 19,2022

ENGINEERING BY TRENCO A MiTek Affiliate
818 Soundside Road
Edenton, NC 27932

Job	Truss	Truss Type	Qty	Ply	Garman Homes - Wisteria A Roof
Q2200859	C05	Monopitch Structural Gable	1	1	I54261573 Job Reference (optional)

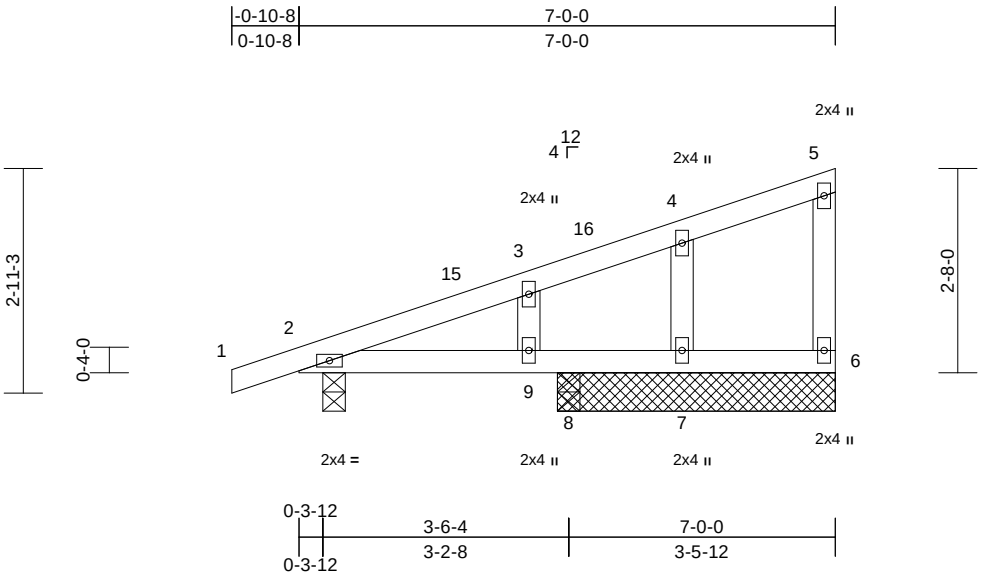

Scale = 1:30.1

Loading	(psf)	Spacing	2-0-0	CSI		DEFL	in	(loc)	l/defl	L/d	PLATES	GRIP
TCLL (roof)	20.0	Plate Grip DOL	1.00	TC	0.07	Vert(LL)	0.00	9-14	>999	240	MT20	244/190
TCDL	10.0	Lumber DOL	1.15	BC	0.12	Vert(CT)	-0.01	9-14	>999	180		
BCLL	0.0*	Rep Stress Incr	YES	WB	0.03	Horz(CT)	0.00	6	n/a	n/a		
BCDL	10.0	Code	IRC2015/TPI2014	Matrix-AS							Weight: 29 lb	FT = 20%

LUMBER

TOP CHORD 2x4 SP No.2
BOT CHORD 2x4 SP No.2
WEBS 2x4 SP No.3
OTHERS 2x4 SP No.3

BRACING

TOP CHORD Structural wood sheathing directly applied, except end verticals.
BOT CHORD Rigid ceiling directly applied.

REACTIONS (size) 2=0-3-8, 6=3-7-8, 7=3-7-8, 8=0-3-8
Max Horiz 2=72 (LC 11)
Max Uplift 2=-20 (LC 12), 6=-1 (LC 9), 7=-7 (LC 12)
Max Grav 2=206 (LC 1), 6=63 (LC 1), 7=128 (LC 1), 8=213 (LC 1)

FORCES (lb) - Maximum Compression/Maximum Tension
TOP CHORD 1-2=0/17, 2-3=-98/82, 3-4=-76/52, 4-5=-42/36, 5-6=-42/36
BOT CHORD 2-9=-85/81, 8-9=-35/38, 7-8=-35/38, 6-7=-35/38
WEBS 4-7=-136/83, 3-9=-136/46

NOTES

1) Wind: ASCE 7-10; Vult=120mph (3-second gust) Vasd=95mph; TCDL=6.0psf; BCDL=6.0psf; h=25ft; B=45ft; L=24ft; eave=4ft; Cat. II; Exp B; Enclosed; MWFRS (directional) and C-C Exterior (2) -0-10-8 to 2-1-8, Interior (1) 2-1-8 to 6-10-4 zone; cantilever left and right exposed ; end vertical left and right exposed;C-C for members and forces & MWFRS for reactions shown; Lumber DOL=1.60 plate grip DOL=1.60
2) Truss designed for wind loads in the plane of the truss only. For studs exposed to wind (normal to the face), see Standard Industry Gable End Details as applicable, or consult qualified building designer as per ANSI/TPI 1.
3) Gable studs spaced at 2-0-0 oc.
4) This truss has been designed for a 10.0 psf bottom chord live load nonconcurrent with any other live loads.
5) * This truss has been designed for a live load of 20.0psf on the bottom chord in all areas where a rectangle 3-06-00 tall by 2-00-00 wide will fit between the bottom chord and any other members.
6) Provide mechanical connection (by others) of truss to bearing plate capable of withstanding 1 lb uplift at joint 6, 7 lb uplift at joint 7 and 20 lb uplift at joint 2.
7) This truss is designed in accordance with the 2015 International Residential Code sections R502.11.1 and R802.10.2 and referenced standard ANSI/TPI 1.
8) This truss design requires that a minimum of 7/16" structural wood sheathing be applied directly to the top chord and 1/2" gypsum sheetrock be applied directly to the bottom chord.

LOAD CASE(S) Standard

September 19,2022

ENGINEERING BY TRENCO A MiTek Affiliate
818 Soundside Road
Edenton, NC 27932

Job	Truss	Truss Type	Qty	Ply	Garman Homes - Wisteria A Roof
Q2200859	P01	Piggyback	2	1	I54261574 Job Reference (optional)

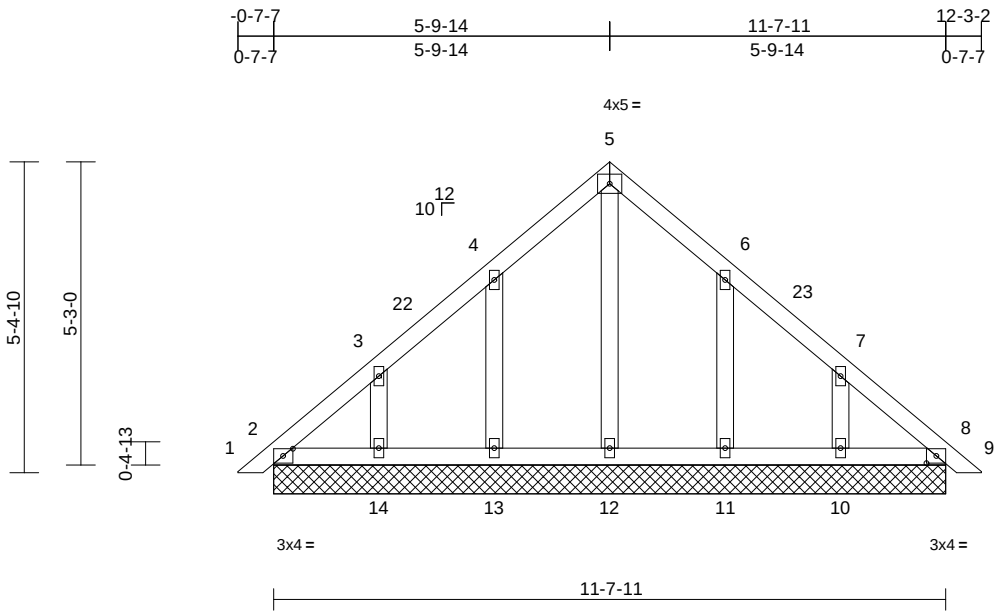

Scale = 1:39.9

Plate Offsets (X, Y): [2:0-2-1,0-1-8], [8:0-2-1,0-1-8]

Loading	(psf)	Spacing	2-0-0	CSI		DEFL	in	(loc)	l/defl	L/d	PLATES	GRIP
TCLL (roof)	20.0	Plate Grip DOL	1.00	TC	0.05	Vert(LL)	n/a	-	n/a	999	MT20	244/190
TCDL	10.0	Lumber DOL	1.15	BC	0.05	Vert(CT)	n/a	-	n/a	999		
BCLL	0.0*	Rep Stress Incr	YES	WB	0.04	Horz(CT)	0.00	8	n/a	n/a		
BCDL	10.0	Code	IRC2015/TPI2014	Matrix-AS							Weight: 62 lb	FT = 20%

LUMBER
TOP CHORD 2x4 SP No.2
BOT CHORD 2x4 SP No.3
OTHERS 2x4 SP No.3

BRACING
TOP CHORD Structural wood sheathing directly applied.
BOT CHORD Rigid ceiling directly applied.

REACTIONS (size) 2=11-7-11, 8=11-7-11, 10=11-7-11, 11=11-7-11, 12=11-7-11, 13=11-7-11, 14=11-7-11, 15=11-7-11, 19=11-7-11
Max Horiz 2=93 (LC 11), 15=93 (LC 11)
Max Uplift 10=-39 (LC 12), 11=-33 (LC 12), 13=-33 (LC 12), 14=-39 (LC 12)
Max Grav 2=111 (LC 18), 8=103 (LC 1), 10=172 (LC 18), 11=168 (LC 18), 12=119 (LC 1), 13=169 (LC 17), 14=173 (LC 17), 15=111 (LC 18), 19=103 (LC 1)

FORCES (lb) - Maximum Compression/Maximum Tension
TOP CHORD 1-2=0/15, 2-3=-81/68, 3-4=-88/47, 4-5=-97/88, 5-6=-98/90, 6-7=-66/31, 7-8=-60/50, 8-9=0/15
BOT CHORD 2-14=-50/76, 13-14=-50/76, 12-13=-50/76, 11-12=-50/76, 10-11=-50/76, 8-10=-50/76
WEBS 5-12=-78/16, 4-13=-131/87, 3-14=-132/82, 6-11=-131/86, 7-10=-132/83

NOTES
1) Unbalanced roof live loads have been considered for this design.
2) Wind: ASCE 7-10; Vult=120mph (3-second gust) Vasd=95mph; TCDL=6.0psf; BCDL=6.0psf; h=25ft; B=45ft; L=24ft; eave=4ft; Cat. II; Exp B; Enclosed; MWFRS (directional) and C-C Exterior (2) 0-2-14 to 3-2-14, Interior (1) 3-2-14 to 6-5-9, Exterior (2) 6-5-9 to 9-5-9, Interior (1) 9-5-9 to 12-8-4 zone; cantilever left and right exposed ; end vertical left and right exposed;C-C for members and forces & MWFRS for reactions shown; Lumber DOL=1.60 plate grip DOL=1.60
3) Truss designed for wind loads in the plane of the truss only. For studs exposed to wind (normal to the face), see Standard Industry Gable End Details as applicable, or consult qualified building designer as per ANSI/TPI 1.
4) All plates are 2x4 MT20 unless otherwise indicated.
5) Gable requires continuous bottom chord bearing.
6) Gable studs spaced at 2-0-0 oc.
7) This truss has been designed for a 10.0 psf bottom chord live load nonconcurrent with any other live loads.
8) * This truss has been designed for a live load of 20.0psf on the bottom chord in all areas where a rectangle 3-06-00 tall by 2-00-00 wide will fit between the bottom chord and any other members.
9) Provide mechanical connection (by others) of truss to bearing plate capable of withstanding 33 lb uplift at joint 13, 39 lb uplift at joint 14, 33 lb uplift at joint 11 and 39 lb uplift at joint 10.
10) This truss is designed in accordance with the 2015 International Residential Code sections R502.11.1 and R802.10.2 and referenced standard ANSI/TPI 1.
11) This truss design requires that a minimum of 7/16" structural wood sheathing be applied directly to the top chord and 1/2" gypsum sheetrock be applied directly to the bottom chord.
12) See Standard Industry Piggyback Truss Connection Detail for Connection to base truss as applicable, or consult qualified building designer.

LOAD CASE(S) Standard

September 19,2022

ENGINEERING BY TRENCO A MiTek Affiliate
818 Soundside Road
Edenton, NC 27932

Job	Truss	Truss Type	Qty	Ply	Garman Homes - Wisteria A Roof
Q2200859	P02	Piggyback	16	1	I54261575 Job Reference (optional)

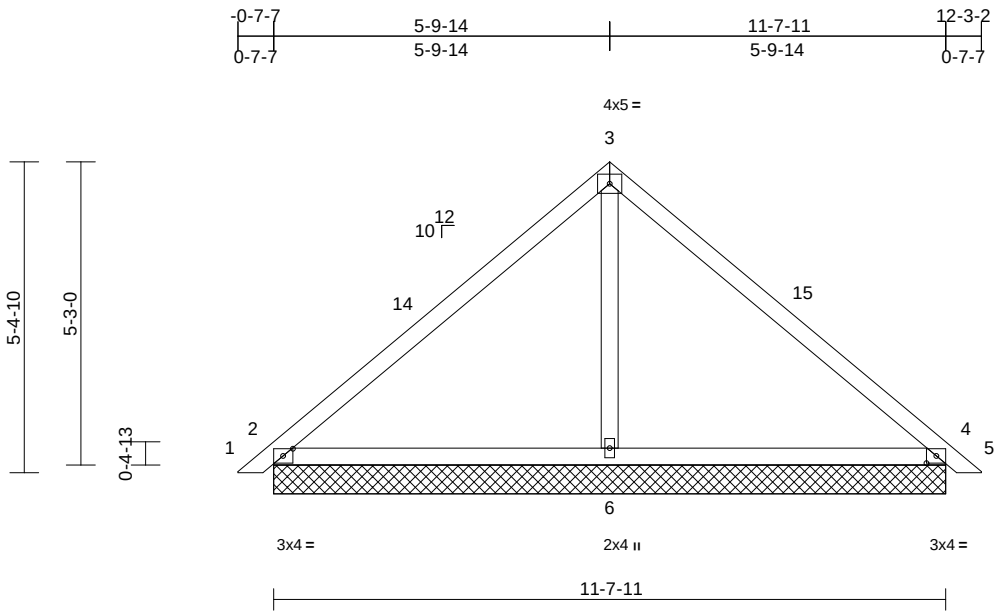

Scale = 1:39.9

Plate Offsets (X, Y): [2:0-2-1,0-1-8], [4:0-2-1,0-1-8]

Loading	(psf)	Spacing	2-0-0	CSI		DEFL	in	(loc)	l/defl	L/d	PLATES	GRIP
TCLL (roof)	20.0	Plate Grip DOL	1.00	TC	0.35	Vert(LL)	n/a	-	n/a	999	MT20	244/190
TCDL	10.0	Lumber DOL	1.15	BC	0.54	Vert(CT)	n/a	-	n/a	999		
BCLL	0.0*	Rep Stress Incr	YES	WB	0.07	Horz(CT)	0.00	2	n/a	n/a		
BCDL	10.0	Code	IRC2015/TPI2014	Matrix-AS							Weight: 49 lb	FT = 20%

LUMBER
TOP CHORD 2x4 SP No.2
BOT CHORD 2x4 SP No.3
OTHERS 2x4 SP No.3

BRACING
TOP CHORD Structural wood sheathing directly applied.
BOT CHORD Rigid ceiling directly applied.

REACTIONS (size) 2=11-7-11, 4=11-7-11, 6=11-7-11, 7=11-7-11, 11=11-7-11
Max Horiz 2=93 (LC 11), 7=93 (LC 11)
Max Uplift 2=-41 (LC 12), 4=-41 (LC 12), 7=-41 (LC 12), 11=-41 (LC 12)
Max Grav 2=323 (LC 1), 4=323 (LC 1), 6=333 (LC 1), 7=323 (LC 1), 11=323 (LC 1)

FORCES (lb) - Maximum Compression/Maximum Tension
TOP CHORD 1-2=0/15, 2-3=-266/108, 3-4=-266/111, 4-5=0/15
BOT CHORD 2-6=-27/142, 4-6=-29/142
WEBS 3-6=-147/0

NOTES
1) Unbalanced roof live loads have been considered for this design.
2) Wind: ASCE 7-10; Vult=120mph (3-second gust) Vasd=95mph; TCDL=6.0psf; BCDL=6.0psf; h=25ft; B=45ft; L=24ft; eave=4ft; Cat. II; Exp B; Enclosed; MWFRS (directional) and C-C Exterior (2) 0-2-14 to 3-2-14, Interior (1) 3-2-14 to 6-5-9, Exterior (2) 6-5-9 to 9-5-9, Interior (1) 9-5-9 to 12-8-4 zone; cantilever left and right exposed ; end vertical left and right exposed;C-C for members and forces & MWFRS for reactions shown; Lumber DOL=1.60 plate grip DOL=1.60
3) Truss designed for wind loads in the plane of the truss only. For studs exposed to wind (normal to the face), see Standard Industry Gable End Details as applicable, or consult qualified building designer as per ANSI/TPI 1.
4) Gable requires continuous bottom chord bearing.
5) Gable studs spaced at 6-0-0 oc.
6) This truss has been designed for a 10.0 psf bottom chord live load nonconcurrent with any other live loads.
7) * This truss has been designed for a live load of 20.0psf on the bottom chord in all areas where a rectangle 3-06-00 tall by 2-00-00 wide will fit between the bottom chord and any other members.
8) Provide mechanical connection (by others) of truss to bearing plate capable of withstanding 41 lb uplift at joint 2, 41 lb uplift at joint 4, 41 lb uplift at joint 2 and 41 lb uplift at joint 4.
9) This truss is designed in accordance with the 2015 International Residential Code sections R502.11.1 and R802.10.2 and referenced standard ANSI/TPI 1.
10) This truss design requires that a minimum of 7/16" structural wood sheathing be applied directly to the top chord and 1/2" gypsum sheetrock be applied directly to the bottom chord.
11) See Standard Industry Piggyback Truss Connection Detail for Connection to base truss as applicable, or consult qualified building designer.

LOAD CASE(S) Standard

September 19,2022

ENGINEERING BY TRENCO A MiTek Affiliate
818 Soundside Road
Edenton, NC 27932

Job	Truss	Truss Type	Qty	Ply	Garman Homes - Wisteria A Roof
Q2200859	V01	Valley	1	1	I54261576 Job Reference (optional)

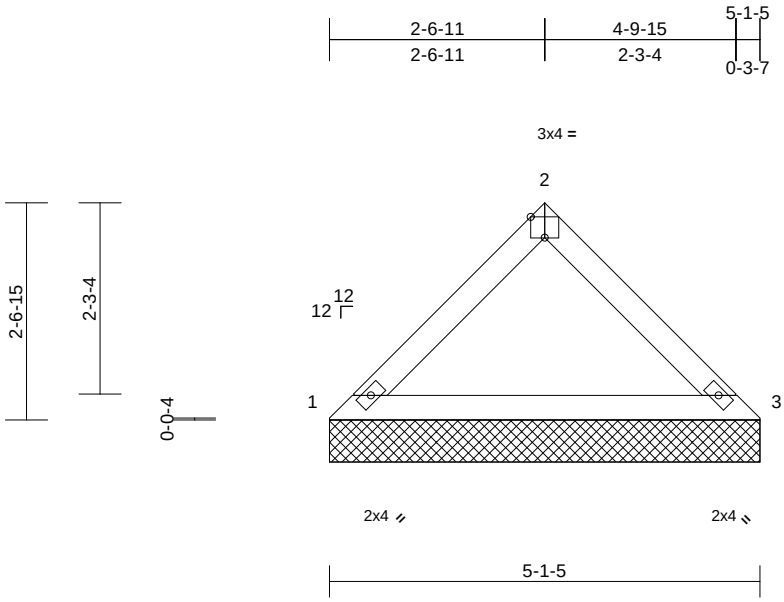

Scale = 1:27.4

Plate Offsets (X, Y): [2:0-2-0,Edge]

Loading	(psf)	Spacing	2-0-0	CSI		DEFL	in	(loc)	l/defl	L/d	PLATES	GRIP
TCLL (roof)	20.0	Plate Grip DOL	1.00	TC	0.17	Vert(LL)	n/a	-	n/a	999	MT20	244/190
TCDL	10.0	Lumber DOL	1.15	BC	0.26	Vert(TL)	n/a	-	n/a	999		
BCLL	0.0*	Rep Stress Incr	YES	WB	0.00	Horiz(TL)	0.01	3	n/a	n/a		
BCDL	10.0	Code	IRC2015/TPI2014	Matrix-MP							Weight: 17 lb	FT = 20%

LUMBER
TOP CHORD 2x4 SP No.2
BOT CHORD 2x4 SP No.3

BRACING
TOP CHORD Structural wood sheathing directly applied or 5-1-5 oc purlins.
BOT CHORD Rigid ceiling directly applied or 10-0-0 oc bracing.

REACTIONS (lb/size) 1=204/5-1-5, 3=204/5-1-5
Max Horiz 1=-45 (LC 10)
Max Uplift 1=-1 (LC 12), 3=-1 (LC 12)

FORCES (lb) - Max. Comp./Max. Ten. - All forces 250 (lb) or less except when shown.
TOP CHORD 1-2=-261/39

NOTES
1) Unbalanced roof live loads have been considered for this design.
2) Wind: ASCE 7-10; Vult=120mph (3-second gust) Vasd=95mph; TCDL=6.0psf; BCDL=6.0psf; h=25ft; B=45ft; L=24ft; eave=4ft; Cat. II; Exp B; Enclosed; MWFRS (directional) and C-C Exterior (2) zone; cantilever left and right exposed ; end vertical left and right exposed;C-C for members and forces & MWFRS for reactions shown; Lumber DOL=1.60 plate grip DOL=1.60
3) Truss designed for wind loads in the plane of the truss only. For studs exposed to wind (normal to the face), see Standard Industry Gable End Details as applicable, or consult qualified building designer as per ANSI/TPI 1.
4) Gable requires continuous bottom chord bearing.
5) Gable studs spaced at 6-0-0 oc.
6) This truss has been designed for a 10.0 psf bottom chord live load nonconcurrent with any other live loads.
7) * This truss has been designed for a live load of 20.0psf on the bottom chord in all areas where a rectangle 3-06-00 tall by 2-00-00 wide will fit between the bottom chord and any other members.
8) Provide mechanical connection (by others) of truss to bearing plate capable of withstanding 1 lb uplift at joint 1 and 1 lb uplift at joint 3.
9) This truss is designed in accordance with the 2015 International Residential Code sections R502.11.1 and R802.10.2 and referenced standard ANSI/TPI 1.

LOAD CASE(S) Standard

September 19,2022

ENGINEERING BY TRENCO A MiTek Affiliate
818 Soundside Road
Edenton, NC 27932

Job	Truss	Truss Type	Qty	Ply	Garman Homes - Wisteria A Roof
Q2200859	V02	Valley	1	1	I54261577 Job Reference (optional)

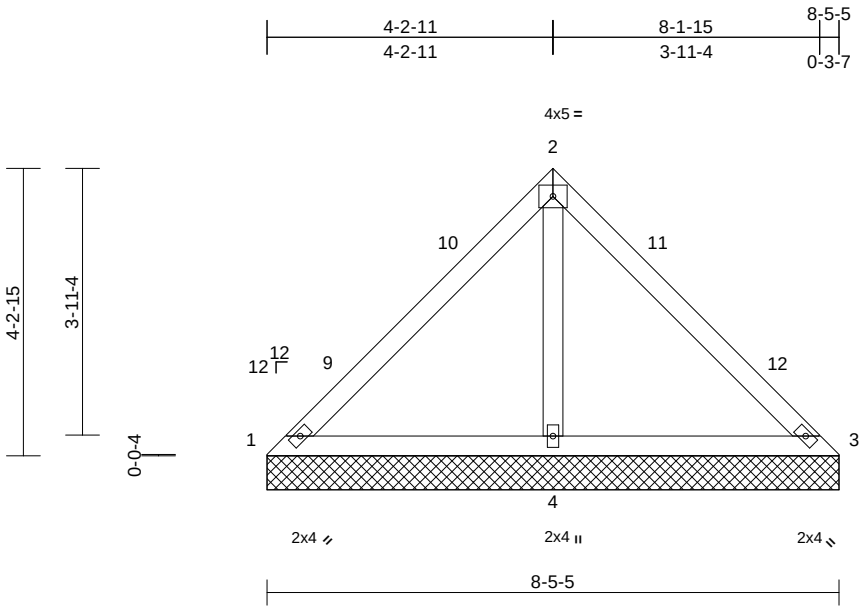

Scale = 1:34

Loading	(psf)	Spacing	2-0-0	CSI		DEFL	in	(loc)	l/defl	L/d	PLATES	GRIP
TCLL (roof)	20.0	Plate Grip DOL	1.00	TC	0.24	Vert(LL)	n/a	-	n/a	999	MT20	244/190
TCDL	10.0	Lumber DOL	1.15	BC	0.37	Vert(TL)	n/a	-	n/a	999		
BCLL	0.0*	Rep Stress Incr	YES	WB	0.15	Horiz(TL)	0.00	3	n/a	n/a		
BCDL	10.0	Code	IRC2015/TPI2014	Matrix-MP							Weight: 34 lb	FT = 20%

LUMBER
TOP CHORD 2x4 SP No.2
BOT CHORD 2x4 SP No.3
OTHERS 2x4 SP No.3

BRACING
TOP CHORD Structural wood sheathing directly applied or 8-5-5 oc purlins.
BOT CHORD Rigid ceiling directly applied or 6-0-0 oc bracing.

REACTIONS (size) 1=8-5-5, 3=8-5-5, 4=8-5-5
Max Horiz 1=-77 (LC 10)
Max Uplift 1=-23 (LC 22), 3=-23 (LC 21), 4=-76 (LC 12)
Max Grav 1=61 (LC 21), 3=61 (LC 22), 4=625 (LC 1)

FORCES (lb) - Maximum Compression/Maximum Tension
TOP CHORD 1-2=-100/243, 2-3=-100/243
BOT CHORD 1-4=-209/136, 3-4=-209/136
WEBS 2-4=-460/165

NOTES
1) Unbalanced roof live loads have been considered for this design.
2) Wind: ASCE 7-10; Vult=120mph (3-second gust) Vasd=95mph; TCDL=6.0psf; BCDL=6.0psf; h=25ft; B=45ft; L=24ft; eave=4ft; Cat. II; Exp B; Enclosed; MWFRS (directional) and C-C Exterior (2) 0-0-4 to 3-0-4, Interior (1) 3-0-4 to 4-2-15, Exterior (2) 4-2-15 to 7-2-15, Interior (1) 7-2-15 to 8-5-9 zone; cantilever left and right exposed ; end vertical left and right exposed;C-C for members and forces & MWFRS for reactions shown; Lumber DOL=1.60 plate grip DOL=1.60
3) Truss designed for wind loads in the plane of the truss only. For studs exposed to wind (normal to the face), see Standard Industry Gable End Details as applicable, or consult qualified building designer as per ANSI/TPI 1.
4) Gable requires continuous bottom chord bearing.
5) Gable studs spaced at 6-0-0 oc.
6) This truss has been designed for a 10.0 psf bottom chord live load nonconcurrent with any other live loads.
7) * This truss has been designed for a live load of 20.0psf on the bottom chord in all areas where a rectangle 3-06-00 tall by 2-00-00 wide will fit between the bottom chord and any other members.
8) Provide mechanical connection (by others) of truss to bearing plate capable of withstanding 23 lb uplift at joint 1, 23 lb uplift at joint 3 and 76 lb uplift at joint 4.
9) This truss is designed in accordance with the 2015 International Residential Code sections R502.11.1 and R802.10.2 and referenced standard ANSI/TPI 1.

LOAD CASE(S) Standard

September 19,2022

ENGINEERING BY TRENCO A MiTek Affiliate
818 Soundside Road
Edenton, NC 27932

Job	Truss	Truss Type	Qty	Ply	Garman Homes - Wisteria A Roof
Q2200859	V03	Valley	1	1	I54261578 Job Reference (optional)

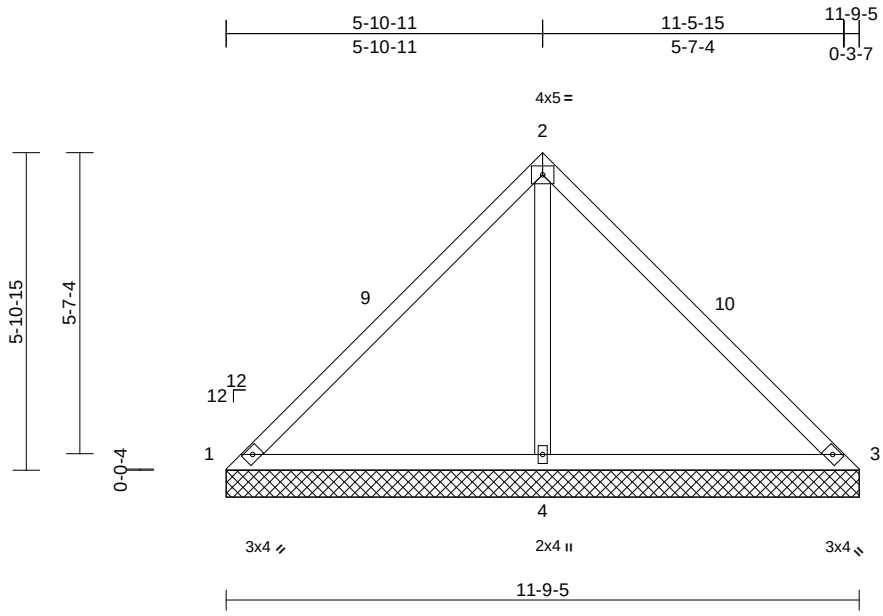

Scale = 1:42.9

Loading	(psf)	Spacing	2-0-0	CSI		DEFL	in	(loc)	l/defl	L/d	PLATES	GRIP
TCLL (roof)	20.0	Plate Grip DOL	1.00	TC	0.44	Vert(LL)	n/a	-	n/a	999	MT20	244/190
TCDL	10.0	Lumber DOL	1.15	BC	0.61	Vert(TL)	n/a	-	n/a	999		
BCLL	0.0*	Rep Stress Incr	YES	WB	0.45	Horiz(TL)	0.01	3	n/a	n/a		
BCDL	10.0	Code	IRC2015/TPI2014	Matrix-MS							Weight: 49 lb	FT = 20%

LUMBER
TOP CHORD 2x4 SP No.2
BOT CHORD 2x4 SP No.3
OTHERS 2x4 SP No.3

BRACING
TOP CHORD Structural wood sheathing directly applied or 10-0-0 oc purlins.
BOT CHORD Rigid ceiling directly applied or 6-0-0 oc bracing.

REACTIONS (size) 1=11-9-5, 3=11-9-5, 4=11-9-5
Max Horiz 1=-109 (LC 10)
Max Uplift 1=-64 (LC 22), 3=-64 (LC 21), 4=-125 (LC 12)
Max Grav 1=59 (LC 12), 3=59 (LC 12), 4=954 (LC 1)

FORCES (lb) - Maximum Compression/Maximum Tension
TOP CHORD 1-2=-162/416, 2-3=-163/416
BOT CHORD 1-4=-315/172, 3-4=-315/172
WEBS 2-4=-752/244

NOTES
1) Unbalanced roof live loads have been considered for this design.
2) Wind: ASCE 7-10; Vult=120mph (3-second gust) Vasd=95mph; TCDL=6.0psf; BCDL=6.0psf; h=25ft; B=45ft; L=24ft; eave=4ft; Cat. II; Exp B; Enclosed; MWFRS (directional) and C-C Exterior (2) 0-0-4 to 3-0-4, Interior (1) 3-0-4 to 5-10-15, Exterior (2) 5-10-15 to 8-10-15, Interior (1) 8-10-15 to 11-9-9 zone; cantilever left and right exposed ; end vertical left and right exposed;C-C for members and forces & MWFRS for reactions shown; Lumber DOL=1.60 plate grip DOL=1.60
3) Truss designed for wind loads in the plane of the truss only. For studs exposed to wind (normal to the face), see Standard Industry Gable End Details as applicable, or consult qualified building designer as per ANSI/TPI 1.
4) Gable requires continuous bottom chord bearing.
5) Gable studs spaced at 6-0-0 oc.
6) This truss has been designed for a 10.0 psf bottom chord live load nonconcurrent with any other live loads.
7) * This truss has been designed for a live load of 20.0psf on the bottom chord in all areas where a rectangle 3-06-00 tall by 2-00-00 wide will fit between the bottom chord and any other members.
8) Provide mechanical connection (by others) of truss to bearing plate capable of withstanding 64 lb uplift at joint 1, 64 lb uplift at joint 3 and 125 lb uplift at joint 4.
9) This truss is designed in accordance with the 2015 International Residential Code sections R502.11.1 and R802.10.2 and referenced standard ANSI/TPI 1.

LOAD CASE(S) Standard

September 19,2022

ENGINEERING BY TRENCO A MiTek Affiliate
818 Soundside Road
Edenton, NC 27932

Job	Truss	Truss Type	Qty	Ply	Garman Homes - Wisteria A Roof
Q2200859	V04	Valley	1	1	I54261579 Job Reference (optional)

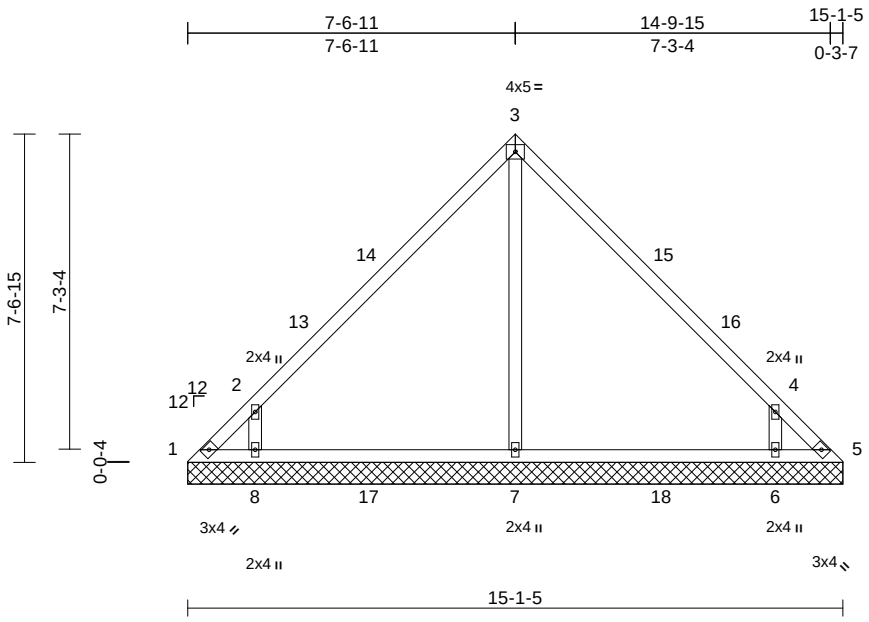

Scale = 1:53.2

Loading	(psf)	Spacing	2-0-0	CSI		DEFL	in	(loc)	l/defl	L/d	PLATES	GRIP
TCLL (roof)	20.0	Plate Grip DOL	1.00	TC	0.45	Vert(LL)	n/a	-	n/a	999	MT20	244/190
TCDL	10.0	Lumber DOL	1.15	BC	0.34	Vert(TL)	n/a	-	n/a	999		
BCLL	0.0*	Rep Stress Incr	YES	WB	0.16	Horiz(TL)	0.00	5	n/a	n/a		
BCDL	10.0	Code	IRC2015/TPI2014	Matrix-MS							Weight: 66 lb	FT = 20%

LUMBER
TOP CHORD 2x4 SP No.2
BOT CHORD 2x4 SP No.2
OTHERS 2x4 SP No.3

BRACING
TOP CHORD Structural wood sheathing directly applied or 6-0-0 oc purlins.
BOT CHORD Rigid ceiling directly applied or 10-0-0 oc bracing.

REACTIONS (size) 1=15-1-5, 5=15-1-5, 6=15-1-5, 7=15-1-5, 8=15-1-5
Max Horiz 1=-141 (LC 10)
Max Uplift 1=-127 (LC 10), 5=-93 (LC 11), 6=-141 (LC 12), 8=-141 (LC 12)
Max Grav 1=105 (LC 9), 5=82 (LC 8), 6=549 (LC 18), 7=437 (LC 17), 8=556 (LC 17)

FORCES (lb) - Maximum Compression/Maximum Tension
TOP CHORD 1-2=-186/179, 2-3=-261/124, 3-4=-256/124, 4-5=-185/167
BOT CHORD 1-8=-114/116, 7-8=-29/116, 6-7=-29/116, 5-6=-114/116
WEBS 3-7=-164/0, 2-8=-519/335, 4-6=-519/335

NOTES
1) Unbalanced roof live loads have been considered for this design.
2) Wind: ASCE 7-10; Vult=120mph (3-second gust) Vasd=95mph; TCDL=6.0psf; BCDL=6.0psf; h=25ft; B=45ft; L=24ft; eave=4ft; Cat. II; Exp B; Enclosed; MWFRS (directional) and C-C Exterior (2) 0-0-4 to 3-0-4, Interior (1) 3-0-4 to 7-6-15, Exterior (2) 7-6-15 to 10-6-15, Interior (1) 10-6-15 to 15-1-9 zone; cantilever left and right exposed ; end vertical left and right exposed;C-C for members and forces & MWFRS for reactions shown; Lumber DOL=1.60 plate grip DOL=1.60
3) Truss designed for wind loads in the plane of the truss only. For studs exposed to wind (normal to the face), see Standard Industry Gable End Details as applicable, or consult qualified building designer as per ANSI/TPI 1.
4) Gable requires continuous bottom chord bearing.
5) Gable studs spaced at 6-0-0 oc.
6) This truss has been designed for a 10.0 psf bottom chord live load nonconcurrent with any other live loads.
7) * This truss has been designed for a live load of 20.0psf on the bottom chord in all areas where a rectangle 3-06-00 tall by 2-00-00 wide will fit between the bottom chord and any other members, with BCDL = 10.0psf.
8) Provide mechanical connection (by others) of truss to bearing plate capable of withstanding 127 lb uplift at joint 1, 93 lb uplift at joint 5, 141 lb uplift at joint 8 and 141 lb uplift at joint 6.
9) This truss is designed in accordance with the 2015 International Residential Code sections R502.11.1 and R802.10.2 and referenced standard ANSI/TPI 1.

LOAD CASE(S) Standard

September 19,2022

ENGINEERING BY TRENCO A MiTek Affiliate
818 Soundside Road
Edenton, NC 27932

Job	Truss	Truss Type	Qty	Ply	Garman Homes - Wisteria A Roof
Q2200859	V05	Valley	1	1	I54261580 Job Reference (optional)

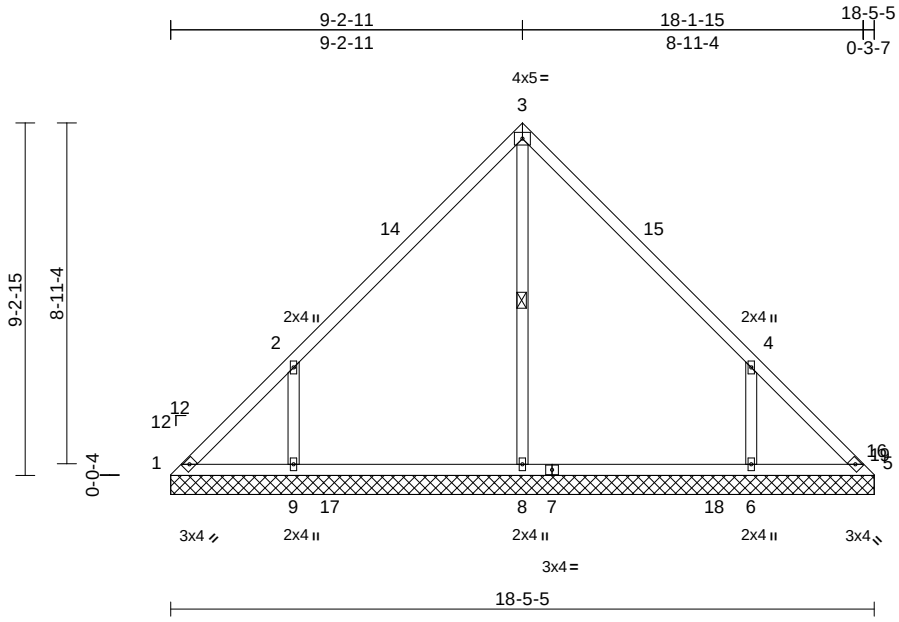

Scale = 1:60.4

Loading	(psf)	Spacing	2-0-0	CSI		DEFL	in	(loc)	l/defl	L/d	PLATES	GRIP
TCLL (roof)	20.0	Plate Grip DOL	1.00	TC	0.46	Vert(LL)	n/a	-	n/a	999	MT20	244/190
TCDL	10.0	Lumber DOL	1.15	BC	0.41	Vert(TL)	n/a	-	n/a	999		
BCLL	0.0 *	Rep Stress Incr	YES	WB	0.09	Horiz(TL)	0.00	5	n/a	n/a		
BCDL	10.0	Code	IRC2015/TPI2014	Matrix-MS							Weight: 86 lb	FT = 20%

LUMBER
TOP CHORD 2x4 SP No.2
BOT CHORD 2x4 SP No.2
OTHERS 2x4 SP No.3

BRACING
TOP CHORD Structural wood sheathing directly applied or 6-0-0 oc purlins.
BOT CHORD Rigid ceiling directly applied or 10-0-0 oc bracing.
WEBS 1 Row at midpt 3-8

REACTIONS (size) 1=18-5-5, 5=18-5-5, 6=18-5-5, 8=18-5-5, 9=18-5-5
Max Horiz 1=-171 (LC 10)
Max Uplift 1=-42 (LC 10), 5=-13 (LC 11), 6=-136 (LC 12), 9=-136 (LC 12)
Max Grav 1=162 (LC 18), 5=119 (LC 17), 6=553 (LC 18), 8=503 (LC 17), 9=559 (LC 17)

FORCES (lb) - Maximum Compression/Maximum Tension
TOP CHORD 1-2=-194/156, 2-3=-246/142, 3-4=-221/141, 4-5=-154/107
BOT CHORD 1-9=-52/136, 8-9=-52/110, 6-8=-52/110, 5-6=-52/114
WEBS 3-8=-216/0, 2-9=-407/236, 4-6=-406/236

NOTES
1) Unbalanced roof live loads have been considered for this design.
2) Wind: ASCE 7-10; Vult=120mph (3-second gust) Vasd=95mph; TCDL=6.0psf; BCDL=6.0psf; h=25ft; B=45ft; L=24ft; eave=4ft; Cat. II; Exp B; Enclosed; MWFRS (directional) and C-C Exterior (2) 0-0-4 to 3-2-15, Interior (1) 3-2-15 to 9-2-15, Exterior (2) 9-2-15 to 12-2-15, Interior (1) 12-2-15 to 18-1-10 zone; cantilever left and right exposed ; end vertical left and right exposed;C-C for members and forces & MWFRS for reactions shown; Lumber DOL=1.60 plate grip DOL=1.60
3) Truss designed for wind loads in the plane of the truss only. For studs exposed to wind (normal to the face), see Standard Industry Gable End Details as applicable, or consult qualified building designer as per ANSI/TPI 1.
4) Gable requires continuous bottom chord bearing.
5) Gable studs spaced at 6-0-0 oc.
6) This truss has been designed for a 10.0 psf bottom chord live load nonconcurrent with any other live loads.
7) * This truss has been designed for a live load of 20.0psf on the bottom chord in all areas where a rectangle 3-06-00 tall by 2-00-00 wide will fit between the bottom chord and any other members, with BCDL = 10.0psf.
8) Provide mechanical connection (by others) of truss to bearing plate capable of withstanding 42 lb uplift at joint 1, 13 lb uplift at joint 5, 136 lb uplift at joint 9 and 136 lb uplift at joint 6.
9) This truss is designed in accordance with the 2015 International Residential Code sections R502.11.1 and R802.10.2 and referenced standard ANSI/TPI 1.

LOAD CASE(S) Standard

September 19,2022

ENGINEERING BY TRENCO A MiTek Affiliate
818 Soundside Road
Edenton, NC 27932

Job	Truss	Truss Type	Qty	Ply	Garman Homes - Wisteria A Roof
Q2200859	V06	Valley	1	1	I54261581 Job Reference (optional)

Carolina Structural Systems, LLC, Ether, NC - 27247, Run: 8.43 S Jan 6 2022 Print: 8.430 S Jan 6 2022 MiTek Industries, Inc. Mon Sep 19 07:39:25 Page: 1
ID:6FPghrIX6NRkRijAjTB5ZMzCo81-RfC?PsB70Hq3NSgPqnL8w3uITXbGKWrCDoi7J4zJC?f

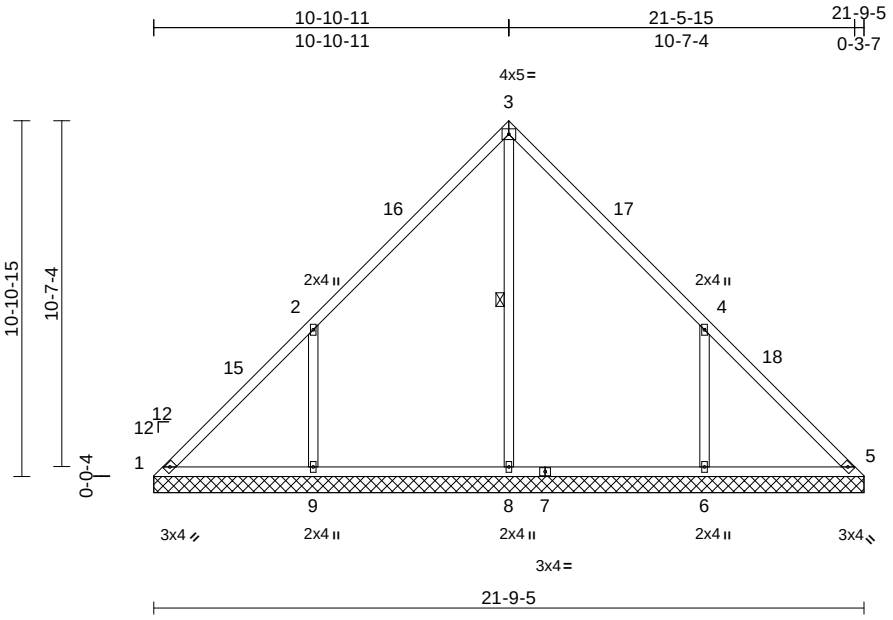

Scale = 1:70.7

Loading	(psf)	Spacing	2-0-0	CSI		DEFL	in	(loc)	l/defl	L/d	PLATES	GRIP
TCLL (roof)	20.0	Plate Grip DOL	1.00	TC	0.48	Vert(LL)	n/a	-	n/a	999	MT20	244/190
TCDL	10.0	Lumber DOL	1.15	BC	0.42	Vert(TL)	n/a	-	n/a	999		
BCLL	0.0*	Rep Stress Incr	YES	WB	0.34	Horiz(TL)	0.00	5	n/a	n/a		
BCDL	10.0	Code	IRC2015/TPI2014	Matrix-MS							Weight: 105 lb	FT = 20%

LUMBER
TOP CHORD 2x4 SP No.2
BOT CHORD 2x4 SP No.2
OTHERS 2x4 SP No.3

BRACING
TOP CHORD Structural wood sheathing directly applied or 10-0-0 oc purlins.
BOT CHORD Rigid ceiling directly applied or 6-0-0 oc bracing.
WEBS 1 Row at midpt 3-8

REACTIONS (size) 1=21-9-5, 5=21-9-5, 6=21-9-5, 8=21-9-5, 9=21-9-5, 14=21-9-5
Max Horiz 1=-204 (LC 10)
Max Uplift 1=-123 (LC 10), 6=-156 (LC 12), 9=-161 (LC 12)
Max Grav 1=150 (LC 11), 5=0 (LC 11), 6=630 (LC 18), 8=894 (LC 17), 9=626 (LC 17), 14=0 (LC 11)

FORCES (lb) - Maximum Compression/Maximum Tension
TOP CHORD 1-2=-176/406, 2-3=-121/331, 3-4=-121/293, 4-5=-151/298
BOT CHORD 1-9=-148/65, 8-9=-148/65, 6-8=-148/65, 5-6=-148/65
WEBS 3-8=-580/0, 2-9=-433/244, 4-6=-432/243

NOTES
1) Unbalanced roof live loads have been considered for this design.
2) Wind: ASCE 7-10; Vult=120mph (3-second gust) Vasd=95mph; TCDL=6.0psf; BCDL=6.0psf; h=25ft; B=45ft; L=24ft; eave=4ft; Cat. II; Exp B; Enclosed; MWFRS (directional) and C-C Exterior (2) 0-0-4 to 3-0-4, Interior (1) 3-0-4 to 10-10-15, Exterior (2) 10-10-15 to 13-10-15, Interior (1) 13-10-15 to 21-5-10 zone; cantilever left and right exposed ; end vertical left and right exposed;C-C for members and forces & MWFRS for reactions shown; Lumber DOL=1.60 plate grip DOL=1.60
3) Truss designed for wind loads in the plane of the truss only. For studs exposed to wind (normal to the face), see Standard Industry Gable End Details as applicable, or consult qualified building designer as per ANSI/TPI 1.
4) Gable requires continuous bottom chord bearing.
5) Gable studs spaced at 6-0-0 oc.
6) This truss has been designed for a 10.0 psf bottom chord live load nonconcurrent with any other live loads.
7) * This truss has been designed for a live load of 20.0psf on the bottom chord in all areas where a rectangle 3-06-00 tall by 2-00-00 wide will fit between the bottom chord and any other members, with BCDL = 10.0psf.
8) Provide mechanical connection (by others) of truss to bearing plate capable of withstanding 123 lb uplift at joint 1, 161 lb uplift at joint 9 and 156 lb uplift at joint 6.
9) This truss is designed in accordance with the 2015 International Residential Code sections R502.11.1 and R802.10.2 and referenced standard ANSI/TPI 1.

LOAD CASE(S) Standard

September 19,2022

ENGINEERING BY TRENCO A MiTek Affiliate
818 Soundside Road
Edenton, NC 27932

Job	Truss	Truss Type	Qty	Ply	Garman Homes - Wisteria A Roof
Q2200859	V07	Valley	1	1	I54261582 Job Reference (optional)

Carolina Structural Systems, LLC, Ether, NC - 27247, Run: 8.43 S Jan 6 2022 Print: 8.430 S Jan 6 2022 MiTek Industries, Inc. Mon Sep 19 07:39:25 Page: 1
ID:szJQg8mZEA0qn5xvixv?JHzCo8i-RfC?PsB70Hq3NSgPqnL8w3uITXbGKWrCDoi7J4zJC?f

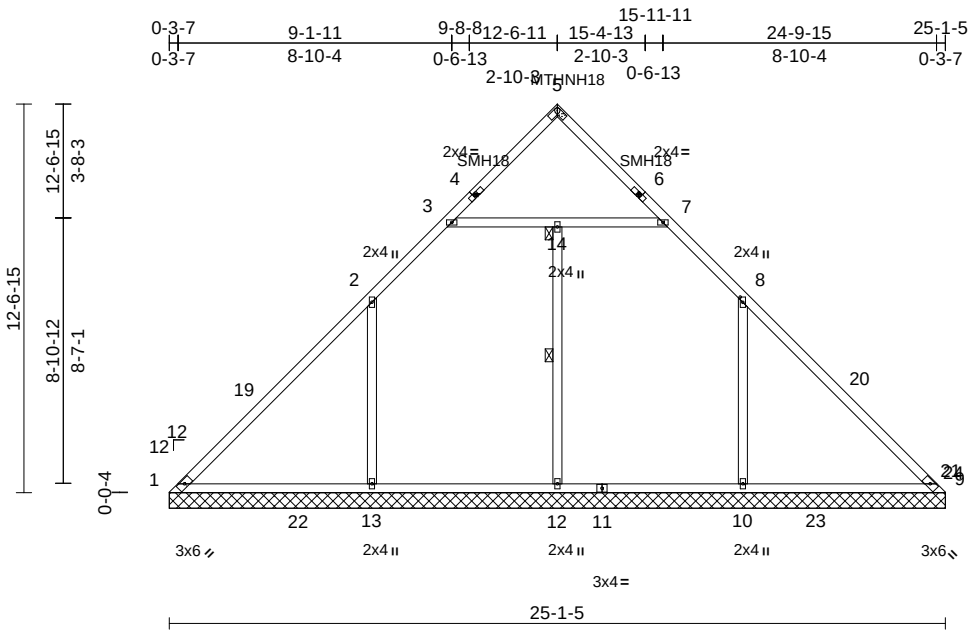

Scale = 1:74.5

Plate Offsets (X, Y): [4:0-1-0,0-1-0], [4:0-1-0,0-1-0], [5:0-1-12,0-1-12], [5:0-1-12,0-1-12], [6:0-1-0,0-1-0], [6:0-1-0,0-1-0], [8:0-2-1,0-1-0]

Loading	(psf)	Spacing	2-0-0	CSI		DEFL	in	(loc)	l/defl	L/d	PLATES	GRIP
TCLL (roof)	20.0	Plate Grip DOL	1.00	TC	0.83	Vert(LL)	n/a	-	n/a	999	MT20	244/190
TCDL	10.0	Lumber DOL	1.15	BC	0.58	Vert(TL)	n/a	-	n/a	999	MT18HS	244/190
BCLL	0.0*	Rep Stress Incr	YES	WB	0.32	Horiz(TL)	0.03	9	n/a	n/a		
BCDL	10.0	Code	IRC2015/TPI2014	Matrix-MS							Weight: 130 lb	FT = 20%

LUMBER

TOP CHORD	2x4 SP No.2
BOT CHORD	2x4 SP No.2
WEBS	2x4 SP No.2
OTHERS	2x4 SP No.3

BRACING

TOP CHORD	Structural wood sheathing directly applied or 6-0-0 oc purlins.
BOT CHORD	Rigid ceiling directly applied or 10-0-0 oc bracing.
WEBS	1 Row at midpt 12-14
JOINTS	1 Brace at Jt(s): 14

REACTIONS (size) 1=25-1-5, 9=25-1-5, 10=25-1-5, 12=25-1-5, 13=25-1-5
Max Horiz 1=-235 (LC 10)
Max Uplift 10=-110 (LC 12), 13=-111 (LC 12)
Max Grav 1=423 (LC 18), 9=399 (LC 17), 10=767 (LC 18), 12=365 (LC 16), 13=776 (LC 17)

FORCES (lb) - Maximum Compression/Maximum Tension

TOP CHORD	1-2=-497/111, 2-3=-400/108, 3-5=-221/47, 5-7=-221/47, 7-8=-400/108, 8-9=-485/101
BOT CHORD	1-13=-51/418, 12-13=-51/261, 10-12=-51/261, 9-10=-51/367
WEBS	3-14=-182/128, 7-14=-182/128, 12-14=-24/3, 2-13=-436/192, 8-10=-431/191

NOTES

1) Unbalanced roof live loads have been considered for this design.
2) Wind: ASCE 7-10; Vult=120mph (3-second gust) Vasd=95mph; TCDL=6.0psf; BCDL=6.0psf; h=25ft; B=45ft; L=25ft; eave=4ft; Cat. II; Exp B; Enclosed; MWFRS (directional) and C-C Exterior (2) 0-0-4 to 3-0-4, Interior (1) 3-0-4 to 12-6-15, Exterior (2) 12-6-15 to 15-6-15, Interior (1) 15-6-15 to 24-9-10 zone; cantilever left and right exposed ; end vertical left and right exposed;C-C for members and forces & MWFRS for reactions shown; Lumber DOL=1.60 plate grip DOL=1.60
3) Truss designed for wind loads in the plane of the truss only. For studs exposed to wind (normal to the face), see Standard Industry Gable End Details as applicable, or consult qualified building designer as per ANSI/TPI 1.
4) All plates are MT20 plates unless otherwise indicated.
5) All plates are 2x4 MT20 unless otherwise indicated.
6) Attach MiTek MTHNH18 (Half and Half Plate) on each face of truss with USP NA11 nails (0.131" x 1.5") in pre-punched holes provided. All nail holes must be filled (6 Nails per side 12 nails total).
7) See HINGE PLATE DETAILS for plate placement.
8) Provisions must be made to prevent lateral movement of hinged member(s) during transportation.
9) Gable requires continuous bottom chord bearing.
10) Gable studs spaced at 6-0-0 oc.
11) This truss has been designed for a 10.0 psf bottom chord live load nonconcurrent with any other live loads.
12) * This truss has been designed for a live load of 20.0psf on the bottom chord in all areas where a rectangle 3-06-00 tall by 2-00-00 wide will fit between the bottom chord and any other members, with BCDL = 10.0psf.
13) Provide mechanical connection (by others) of truss to bearing plate capable of withstanding 111 lb uplift at joint 13 and 110 lb uplift at joint 10.
14) This truss is designed in accordance with the 2015 International Residential Code sections R502.11.1 and R802.10.2 and referenced standard ANSI/TPI 1.

LOAD CASE(S) Standard

September 19,2022

ENGINEERING BY TRENCO A MiTek Affiliate
818 Soundside Road
Edenton, NC 27932

Job	Truss	Truss Type	Qty	Ply	Garman Homes - Wisteria A Roof
Q2200859	V08	Valley	1	1	I54261583 Job Reference (optional)

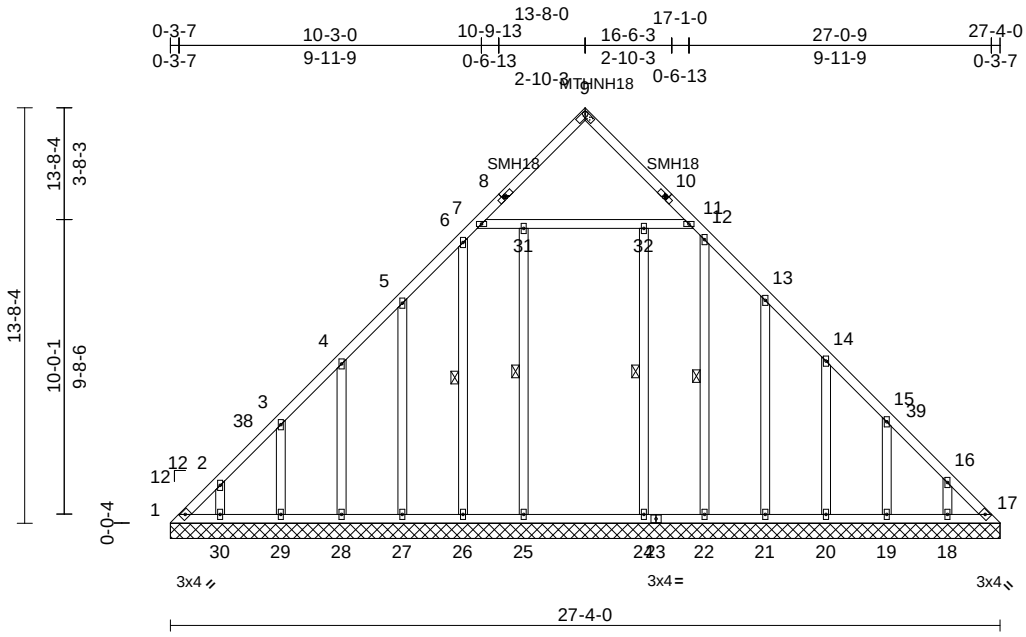

Scale = 1:75.9

Plate Offsets (X, Y): [8:0-1-0,0-1-0], [8:0-1-0,0-1-0], [9:0-1-12,0-1-12], [9:0-1-12,0-1-12], [10:0-1-0,0-1-0], [10:0-1-0,0-1-0]

Loading	(psf)	Spacing	2-0-0	CSI		DEFL	in	(loc)	l/defl	L/d	PLATES	GRIP
TCLL (roof)	20.0	Plate Grip DOL	1.00	TC	0.32	Vert(LL)	n/a	-	n/a	999	MT20	244/190
TCDL	10.0	Lumber DOL	1.15	BC	0.20	Vert(TL)	n/a	-	n/a	999	MT18HS	244/190
BCLL	0.0*	Rep Stress Incr	YES	WB	0.17	Horiz(TL)	0.00	17	n/a	n/a		
BCDL	10.0	Code	IRC2015/TPI2014	Matrix-MS							Weight: 212 lb	FT = 20%

LUMBER

TOP CHORD 2x4 SP No.2
BOT CHORD 2x4 SP No.2
WEBS 2x4 SP No.2
OTHERS 2x4 SP No.3

BRACING

TOP CHORD Structural wood sheathing directly applied or 6-0-0 oc purlins.
BOT CHORD Rigid ceiling directly applied or 10-0-0 oc bracing.
WEBS 1 Row at midpt 25-31, 24-32, 6-26, 12-22

REACTIONS (size) 1=27-4-0, 17=27-4-0, 18=27-4-0, 19=27-4-0, 20=27-4-0, 21=27-4-0, 22=27-4-0, 24=27-4-0, 25=27-4-0, 26=27-4-0, 27=27-4-0, 28=27-4-0, 29=27-4-0, 30=27-4-0, 37=27-4-0
Max Horiz 1=-262 (LC 10)
Max Uplift 1=-133 (LC 10), 19=-90 (LC 12), 20=-43 (LC 12), 21=-45 (LC 12), 26=-40 (LC 11), 27=-51 (LC 12), 28=-51 (LC 12), 29=-53 (LC 12), 30=-35 (LC 12)
Max Grav 1=205 (LC 11), 18=326 (LC 1), 19=144 (LC 11), 20=199 (LC 1), 21=106 (LC 18), 22=325 (LC 1), 24=175 (LC 16), 25=180 (LC 16), 26=383 (LC 17), 27=96 (LC 3), 28=193 (LC 17), 29=172 (LC 17), 30=178 (LC 1)

FORCES (lb) - Maximum Compression/Maximum Tension

TOP CHORD 1-2=-285/262, 2-3=-289/241, 3-4=-270/210, 4-5=-257/189, 5-6=-252/260, 6-7=-276/193, 7-9=-221/47, 9-11=-221/47, 11-12=-276/191, 12-13=-253/259, 13-14=-215/189, 14-15=-133/117, 15-16=-169/50, 16-17=-103/67
BOT CHORD 1-30=-69/128, 29-30=-49/90, 28-29=-49/90, 27-28=-49/90, 26-27=-49/90, 25-26=-49/90, 24-25=-49/90, 22-24=-49/90, 21-22=-49/90, 20-21=-49/90, 19-20=-49/90, 18-19=-49/90, 17-18=-49/90
WEBS 7-31=-214/243, 31-32=-214/243, 11-32=-214/243, 25-31=-27/12, 24-32=-13/10, 6-26=-380/68, 5-27=-99/84, 4-28=-155/82, 3-29=-144/87, 2-30=-128/82, 12-22=-296/0, 13-21=-95/76, 14-20=-155/80, 15-19=-137/102, 16-18=-175/64

NOTES

1) Unbalanced roof live loads have been considered for this design.
2) Wind: ASCE 7-10; Vult=120mph (3-second gust) Vasd=95mph; TCDL=6.0psf; BCDL=6.0psf; h=25ft; B=45ft; L=27ft; eave=4ft; Cat. II; Exp B; Enclosed; MWFRS (directional) and C-C Exterior (2) 0-0-4 to 3-0-4, Interior (1) 3-0-4 to 13-8-4, Exterior (2) 13-8-4 to 16-8-4, Interior (1) 16-8-4 to 27-0-4 zone; cantilever left and right exposed ; end vertical left and right exposed;C-C for members and forces & MWFRS for reactions shown; Lumber DOL=1.60 plate grip DOL=1.60
3) Truss designed for wind loads in the plane of the truss only. For studs exposed to wind (normal to the face), see Standard Industry Gable End Details as applicable, or consult qualified building designer as per ANSI/TPI 1.
4) All plates are MT20 plates unless otherwise indicated.
5) All plates are 2x4 MT20 unless otherwise indicated.
6) Attach MiTek MTHNH18 (Half and Half Plate) on each face of truss with USP NA11 nails (0.131" x 1.5") in pre-punched holes provided. All nail holes must be filled (6 Nails per side 12 nails total).
7) See HINGE PLATE DETAILS for plate placement.
8) Provisions must be made to prevent lateral movement of hinged member(s) during transportation.
9) Gable requires continuous bottom chord bearing.
10) Gable studs spaced at 2-0-0 oc.
11) This truss has been designed for a 10.0 psf bottom chord live load nonconcurrent with any other live loads.
12) * This truss has been designed for a live load of 20.0psf on the bottom chord in all areas where a rectangle 3-06-00 tall by 2-00-00 wide will fit between the bottom chord and any other members, with BCDL = 10.0psf.
13) Provide mechanical connection (by others) of truss to bearing plate capable of withstanding 133 lb uplift at joint 1, 40 lb uplift at joint 26, 51 lb uplift at joint 27, 51 lb uplift at joint 28, 53 lb uplift at joint 29, 35 lb uplift at joint 30, 45 lb uplift at joint 21, 43 lb uplift at joint 20 and 90 lb uplift at joint 19.
14) This truss is designed in accordance with the 2015 International Residential Code sections R502.11.1 and R802.10.2 and referenced standard ANSI/TPI 1.

LOAD CASE(S) Standard

September 19,2022

ENGINEERING BY TRENCO A MiTek Affiliate
818 Soundside Road
Edenton, NC 27932

Symbols

PLATE LOCATION AND ORIENTATION

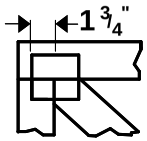

Center plate on joint unless x, y offsets are indicated. Dimensions are in ft-in-sixteenths. Apply plates to both sides of truss and fully embed teeth.

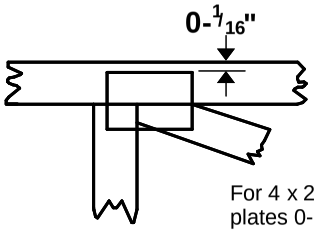

For 4 x 2 orientation, locate plates 0- 1/16" from outside edge of truss.

This symbol indicates the required direction of slots in connector plates.

*** Plate location details available in MiTek 20/20 software or upon request.**

PLATE SIZE

4 x 4

The first dimension is the plate width measured perpendicular to slots. Second dimension is the length parallel to slots.

LATERAL BRACING LOCATION

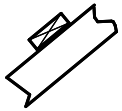

Indicated by symbol shown and/or by text in the bracing section of the output. Use T or I bracing if indicated.

BEARING

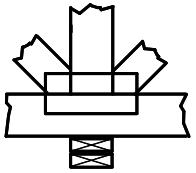

Indicates location where bearings (supports) occur. Icons vary but reaction section indicates joint number where bearings occur. Min size shown is for crushing only.

Industry Standards:

ANSI/TPI1: National Design Specification for Metal Plate Connected Wood Truss Construction.
DSB-89: Design Standard for Bracing.
BCSI: Building Component Safety Information, Guide to Good Practice for Handling, Installing & Bracing of Metal Plate Connected Wood Trusses.

Numbering System

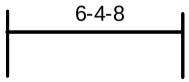

dimensions shown in ft-in-sixteenths
(Drawings not to scale)

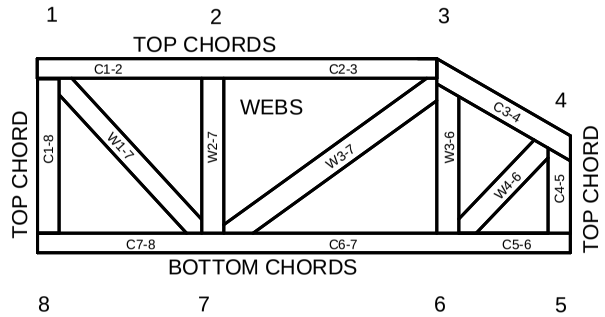

JOINTS ARE GENERALLY NUMBERED/LETTERED CLOCKWISE AROUND THE TRUSS STARTING AT THE JOINT FARTHEST TO THE LEFT.

CHORDS AND WEBS ARE IDENTIFIED BY END JOINT NUMBERS/LETTERS.

PRODUCT CODE APPROVALS

ICC-ES Reports:

ESR-1311, ESR-1352, ESR1988
ER-3907, ESR-2362, ESR-1397, ESR-3282

Trusses are designed for wind loads in the plane of the truss unless otherwise shown.

Lumber design values are in accordance with ANSI/TPI 1 section 6.3 These truss designs rely on lumber values established by others.

MiTek

ENGINEERING BY TRENCO
A MiTek Affiliate

General Safety Notes

Failure to Follow Could Cause Property Damage or Personal Injury

1. Additional stability bracing for truss system, e.g. diagonal or X-bracing, is always required. See BCSI.
2. Truss bracing must be designed by an engineer. For wide truss spacing, individual lateral braces themselves may require bracing, or alternative Tor I bracing should be considered.
3. Never exceed the design loading shown and never stack materials on inadequately braced trusses.
4. Provide copies of this truss design to the building designer, erection supervisor, property owner and all other interested parties.
5. Cut members to bear tightly against each other.
6. Place plates on each face of truss at each joint and embed fully. Knots and wane at joint locations are regulated by ANSI/TPI 1.
7. Design assumes trusses will be suitably protected from the environment in accord with ANSI/TPI 1.
8. Unless otherwise noted, moisture content of lumber shall not exceed 19% at time of fabrication.
9. Unless expressly noted, this design is not applicable for use with fire retardant, preservative treated, or green lumber.
10. Camber is a non-structural consideration and is the responsibility of truss fabricator. General practice is to camber for dead load deflection.
11. Plate type, size, orientation and location dimensions indicated are minimum plating requirements.
12. Lumber used shall be of the species and size, and in all respects, equal to or better than that specified.
13. Top chords must be sheathed or purlins provided at spacing indicated on design.
14. Bottom chords require lateral bracing at 10 ft. spacing, or less, if no ceiling is installed, unless otherwise noted.
15. Connections not shown are the responsibility of others.
16. Do not cut or alter truss member or plate without prior approval of an engineer.
17. Install and load vertically unless indicated otherwise.
18. Use of green or treated lumber may pose unacceptable environmental, health or performance risks. Consult with project engineer before use.
19. Review all portions of this design (front, back, words and pictures) before use. Reviewing pictures alone is not sufficient.
20. Design assumes manufacture in accordance with ANSI/TPI 1 Quality Criteria.
21. The design does not take into account any dynamic or other loads other than those expressly stated.