ENGINEERING BY TRENCO
A MiTek Affiliate

Trenco
818 Soundside Rd
Edenton, NC 27932

Re: J0423-1503
Lot 97 South Creek

The truss drawing(s) referenced below have been prepared by Truss Engineering Co. under my direct supervision based on the parameters provided by Comtech, Inc - Fayetteville.

Pages or sheets covered by this seal: I57566168 thru I57566196

My license renewal date for the state of North Carolina is December 31, 2023.

North Carolina COA: C-0844

NORTH CAROLINA PROFESSIONAL SEAL 036322 ENGINEER ERIC A. GILBERT

April 5,2023

Gilbert, Eric

IMPORTANT NOTE: The seal on these truss component designs is a certification that the engineer named is licensed in the jurisdiction(s) identified and that the designs comply with ANSI/TPI 1. These designs are based upon parameters shown (e.g., loads, supports, dimensions, shapes and design codes), which were given to MiTek or TRENCO. Any project specific information included is for MiTek's or TRENCO's customers file reference purpose only, and was not taken into account in the preparation of these designs. MiTek or TRENCO has not independently verified the applicability of the design parameters or the designs for any particular building. Before use, the building designer should verify applicability of design parameters and properly incorporate these designs into the overall building design per ANSI/TPI 1, Chapter 2.

Job	Truss	Truss Type	Qty	Ply	Lot 97 South Creek
J0423-1503	A1-GE	GABLE	1	1	I57566168 Job Reference (optional)

Comtech, Inc, Fayetteville, NC - 28314, 8.430 s Jan 6 2022 MiTek Industries, Inc. Tue Apr 4 10:42:29 2023 Page 1

ID:g1aKfXs3SSmp0NcU8a5MpuyxuRE-Du1G04?hNa3UrvBW0i09CQryuzZhnnOETTIL0GzU7AO

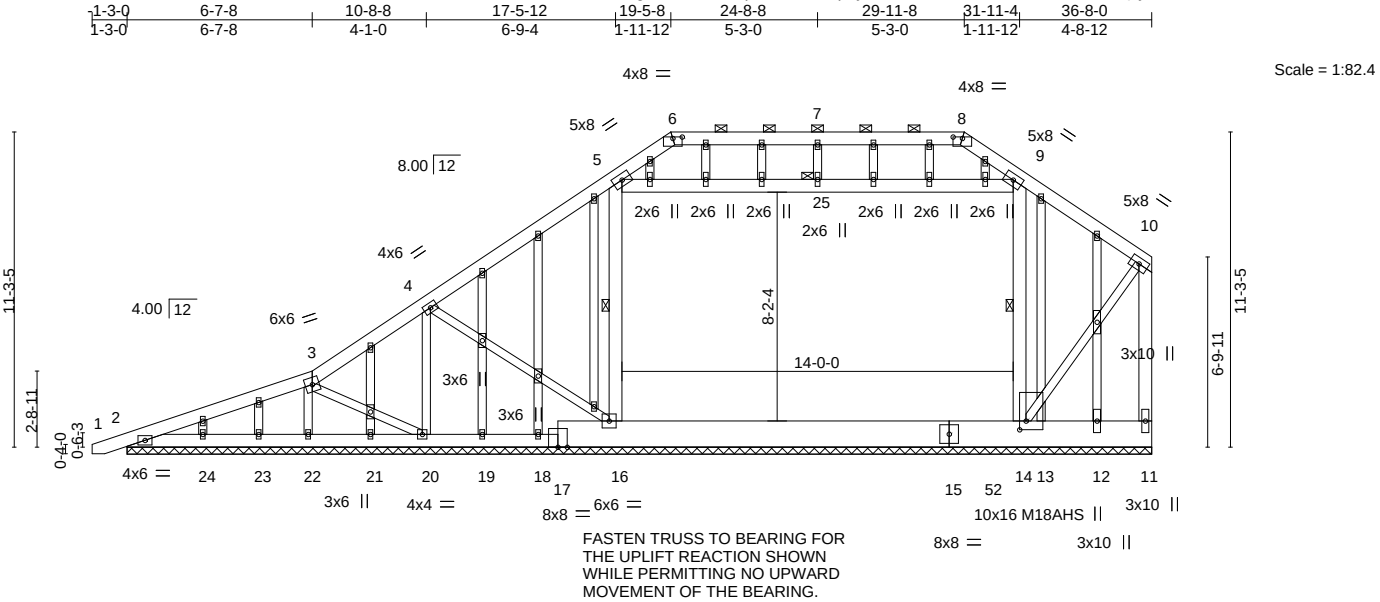

Plate Offsets (X,Y)-- [6:0-4-0,0-0-10], [8:0-4-0,0-0-10], [14:0-3-12,0-2-12]

LOADING (psf)		SPACING- 2-0-0		CSI.		DEFL. in (loc) l/defl L/d		PLATES	GRIP
TCLL	20.0	Plate Grip DOL	1.15	TC	0.48	Vert(LL) -0.00 1 n/r 120		MT20	244/190
TCDL	10.0	Lumber DOL	1.15	BC	0.39	Vert(CT) 0.00 1 n/r 120		M18AHS	186/179
BCLL	0.0 *	Rep Stress Incr	NO	WB	0.30	Horz(CT) -0.00 16 n/a n/a			
BCDL	10.0	Code IRC2015/TPI2014		Matrix-S				Weight: 432 lb	FT = 20%

LUMBER-

TOP CHORD 2x6 SP No.1
BOT CHORD 2x12 SP No.1 *Except*
2-17: 2x6 SP No.1
WEBS 2x4 SP No.2 *Except*
5-16,9-14,5-9,10-11: 2x6 SP No.1
OTHERS 2x4 SP No.2

BRACING-

TOP CHORD Structural wood sheathing directly applied or 6-0-0 oc purlins, except end verticals, and 2-0-0 oc purlins (6-0-0 max.): 6-8.
BOT CHORD Rigid ceiling directly applied or 6-0-0 oc bracing.
WEBS 1 Row at midpt 5-16, 9-14
JOINTS 1 Brace at Jt(s): 25

REACTIONS. All bearings 36-8-0.
(lb) - Max Horz 2=402(LC 8)
Max Uplift All uplift 100 lb or less at joint(s) 22, 16, 14, 11, 23, 24 except 2=-131(LC 32), 20=-188(LC 36), 18=-488(LC 14), 13=-2360(LC 14), 12=-125(LC 5)
Max Grav All reactions 250 lb or less at joint(s) 2, 11, 19, 21, 23, 24 except 22=323(LC 24), 20=308(LC 24), 16=1720(LC 42), 14=4035(LC 43), 12=677(LC 45)

FORCES. (lb) - Max. Comp./Max. Ten. - All forces 250 (lb) or less except when shown.
TOP CHORD 5-6=-902/267, 6-7=-809/246, 7-8=-809/246, 8-9=-913/267
WEBS 3-22=-271/116, 4-20=-289/185, 5-16=-900/141, 9-14=-841/72, 5-25=-215/861, 9-25=-215/861

NOTES-

1) Unbalanced roof live loads have been considered for this design.
2) Wind: ASCE 7-10; Vult=130mph Vasd=103mph; TCDL=6.0psf; BCDL=6.0psf; h=15ft; Cat. II; Exp C; Enclosed; MWFRS (envelope) gable end zone; Lumber DOL=1.60 plate grip DOL=1.60
3) Truss designed for wind loads in the plane of the truss only. For studs exposed to wind (normal to the face), see Standard Industry Gable End Details as applicable, or consult qualified building designer as per ANSI/TPI 1.
4) Provide adequate drainage to prevent water ponding.
5) All plates are MT20 plates unless otherwise indicated.
6) All plates are 2x4 MT20 unless otherwise indicated.
7) Gable requires continuous bottom chord bearing.
8) Gable studs spaced at 2-0-0 oc.
9) This truss has been designed for a 10.0 psf bottom chord live load nonconcurrent with any other live loads.
10) * This truss has been designed for a live load of 30.0psf on the bottom chord in all areas where a rectangle 3-6-0 tall by 2-0-0 wide will fit between the bottom chord and any other members, with BCDL = 10.0psf.
11) Ceiling dead load (10.0 psf) on member(s). 5-25, 9-25; Wall dead load (5.0psf) on member(s).5-16, 9-14
12) Provide mechanical connection (by others) of truss to bearing plate capable of withstanding 100 lb uplift at joint(s) 22, 16, 14, 11, 23, 24 except (jt=lb) 2=131, 20=188, 18=488, 13=2360, 12=125.
13) Graphical purlin representation does not depict the size or the orientation of the purlin along the top and/or bottom chord.
14) N/A

April 5,2023

Continued on page 2

ENGINEERING BY TRENCO A MiTek Affiliate
818 Soundside Road
Edenton, NC 27932

NOTES-

15) Hanger(s) or other connection device(s) shall be provided sufficient to support concentrated load(s) 448 lb down and 167 lb up at 30-10-4, and 448 lb down and 167 lb up at 32-10-4, and 448 lb down and 167 lb up at 34-10-4 on bottom chord. The design/selection of such connection device(s) is the responsibility of others.
16) Attic room checked for L/360 deflection.
17) In the LOAD CASE(S) section, loads applied to the face of the truss are noted as front (F) or back (B).

LOAD CASE(S) Standard

1) Dead + Roof Live (balanced): Lumber Increase=1.15, Plate Increase=1.15
   Uniform Loads (plf)
   Vert: 1-3=-60, 3-6=-60, 6-8=-60, 8-10=-60, 2-11=-20, 5-9=-20
   Drag: 5-16=-10, 9-14=-10
   Concentrated Loads (lb)
   Vert: 13=-448(F) 12=-448(F) 52=-448(F)

Job	Truss	Truss Type	Qty	Ply	Lot 97 South Creek
J0423-1503	A2	ROOF TRUSS	6	1	I57566169 Job Reference (optional)

Comtech, Inc, Fayetteville, NC - 28314, 8.430 s Jan 6 2022 MiTek Industries, Inc. Tue Apr 4 10:42:31 2023 Page 1

ID:g1aKfXs3SSmp0NcU8a5MpuyxuRE-9H80Rm1xvBJC4DLv773dHrwIxn9bFfbXxnnS59zU7AM

1-3-0	6-7-8	10-8-8	17-5-12	19-5-8	24-8-8	29-11-8	31-11-4	36-8-0
1-3-0	6-7-8	4-1-0	6-9-4	1-11-12	5-3-0	5-3-0	1-11-12	4-8-12

Scale = 1:76.5

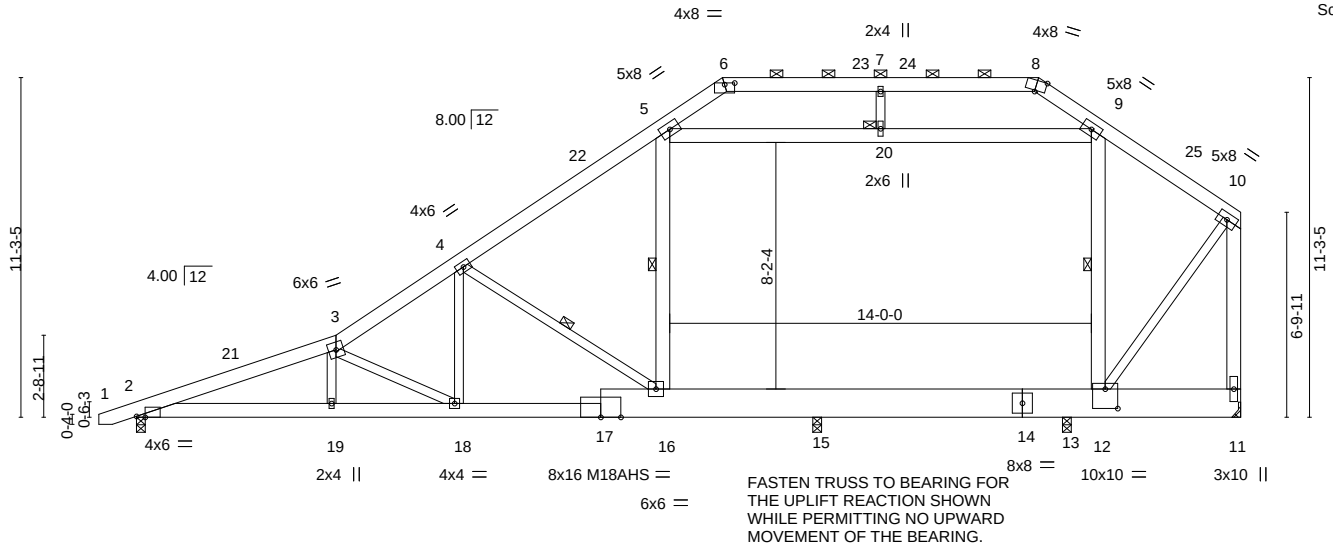

6-7-8	10-8-8	17-5-12	22-9-0	31-0-8	31-11-4	36-8-0
6-7-8	4-1-0	6-9-4	5-3-4	8-3-8	0-10-12	4-8-12

Plate Offsets (X,Y)-- [2:0-3-7,Edge], [6:0-4-0,0-0-10], [8:0-4-0,Edge], [12:0-5-0,0-7-12]

LOADING (psf)		SPACING-	2-0-0	CSI.		DEFL.	in	(loc)	l/defl	L/d	PLATES	GRIP
TCLL	20.0	Plate Grip DOL	1.15	TC	0.51	Vert(LL)	-0.17	16-18	>999	360	MT20	244/190
TCDL	10.0	Lumber DOL	1.15	BC	0.81	Vert(CT)	-0.38	16-18	>707	240	M18AHS	186/179
BCLL	0.0 *	Rep Stress Incr	YES	WB	0.39	Horz(CT)	0.02	11	n/a	n/a		
BCDL	10.0	Code IRC2015/TPI2014		Matrix-S		Wind(LL)	0.13	16-18	>999	240	Weight: 363 lb	FT = 20%

LUMBER-

TOP CHORD 2x6 SP No.1
BOT CHORD 2x12 SP No.1 *Except*
2-17: 2x6 SP 2400F 2.0E
WEBS 2x4 SP No.2 *Except*
5-16,9-12,5-9,10-11: 2x6 SP No.1

BRACING-

TOP CHORD Structural wood sheathing directly applied or 4-3-12 oc purlins, except end verticals, and 2-0-0 oc purlins (6-0-0 max.): 6-8.
BOT CHORD Rigid ceiling directly applied or 10-0-0 oc bracing, Except:
5-3-12 oc bracing: 15-16
5-7-7 oc bracing: 13-15.
WEBS 1 Row at midpt 4-16, 5-16, 9-12
JOINTS 1 Brace at Jt(s): 20

REACTIONS. All bearings 0-3-8 except (jt=length) 11=Mechanical.
(lb) - Max Horz 2=270(LC 12)
Max Uplift All uplift 100 lb or less at joint(s) 2 except 13=-1063(LC 24)
Max Grav All reactions 250 lb or less at joint(s) except 2=1266(LC 1), 11=1696(LC 1), 13=255(LC 9), 15=2160(LC 20)

FORCES. (lb) - Max. Comp./Max. Ten. - All forces 250 (lb) or less except when shown.
TOP CHORD 2-3=-2868/256, 3-4=-2181/220, 4-5=-1010/132, 5-6=-1000/242, 6-7=-897/215, 7-8=-897/215, 8-9=-1008/237, 9-10=-946/153, 10-11=-1597/207
BOT CHORD 2-19=-409/2648, 18-19=-414/2651, 16-18=-287/1786, 15-16=-56/741, 13-15=-56/741, 12-13=-56/741
WEBS 3-18=-986/163, 4-18=-58/1014, 4-16=-1285/281, 5-16=-352/79, 9-12=-453/104, 10-12=-87/1244, 5-20=-204/349, 9-20=-204/349

NOTES-

1) Unbalanced roof live loads have been considered for this design.
2) Wind: ASCE 7-10; Vult=130mph Vasd=103mph; TCDL=6.0psf; BCDL=6.0psf; h=15ft; Cat. II; Exp C; Enclosed; MWFRS (envelope) and C-C Exterior(2) -1-0-5 to 3-4-8, Interior(1) 3-4-8 to 19-6-5, Exterior(2) 19-6-5 to 23-11-2, Interior(1) 23-11-2 to 29-10-11, Exterior(2) 29-10-11 to 34-3-7, Interior(1) 34-3-7 to 36-5-4 zone;C-C for members and forces & MWFRS for reactions shown; Lumber DOL=1.60 plate grip DOL=1.60
3) Provide adequate drainage to prevent water ponding.
4) All plates are MT20 plates unless otherwise indicated.
5) This truss has been designed for a 10.0 psf bottom chord live load nonconcurrent with any other live loads.
6) * This truss has been designed for a live load of 30.0psf on the bottom chord in all areas where a rectangle 3-6-0 tall by 2-0-0 wide will fit between the bottom chord and any other members.
7) Ceiling dead load (10.0 psf) on member(s). 5-20, 9-20; Wall dead load (5.0psf) on member(s).5-16, 9-12
8) Bottom chord live load (40.0 psf) and additional bottom chord dead load (10.0 psf) applied only to room. 15-16, 13-15, 12-13
9) Refer to girder(s) for truss to truss connections.
10) Provide mechanical connection (by others) of truss to bearing plate capable of withstanding 100 lb uplift at joint(s) 2 except (jt=lb) 13=1063.
11) Graphical purlin representation does not depict the size or the orientation of the purlin along the top and/or bottom chord.
12) N/A
13) Attic room checked for L/360 deflection.

April 5,2023

ENGINEERING BY TRENCO A MiTek Affiliate
818 Soundside Road
Edenton, NC 27932

Job	Truss	Truss Type	Qty	Ply	Lot 97 South Creek
J0423-1503	A3	PIGGYBACK ATTIC	3	1	I57566170 Job Reference (optional)

Comtech, Inc, Fayetteville, NC - 28314, 8.430 s Jan 6 2022 MiTek Industries, Inc. Tue Apr 4 10:42:33 2023 Page 1

ID:g1aKfXs3SSmp0NcU8a5MpuyxuRE-5fGmsS2CQpawKXVHFY55NG?eVbuDjRSqO5GZ91zU7AK

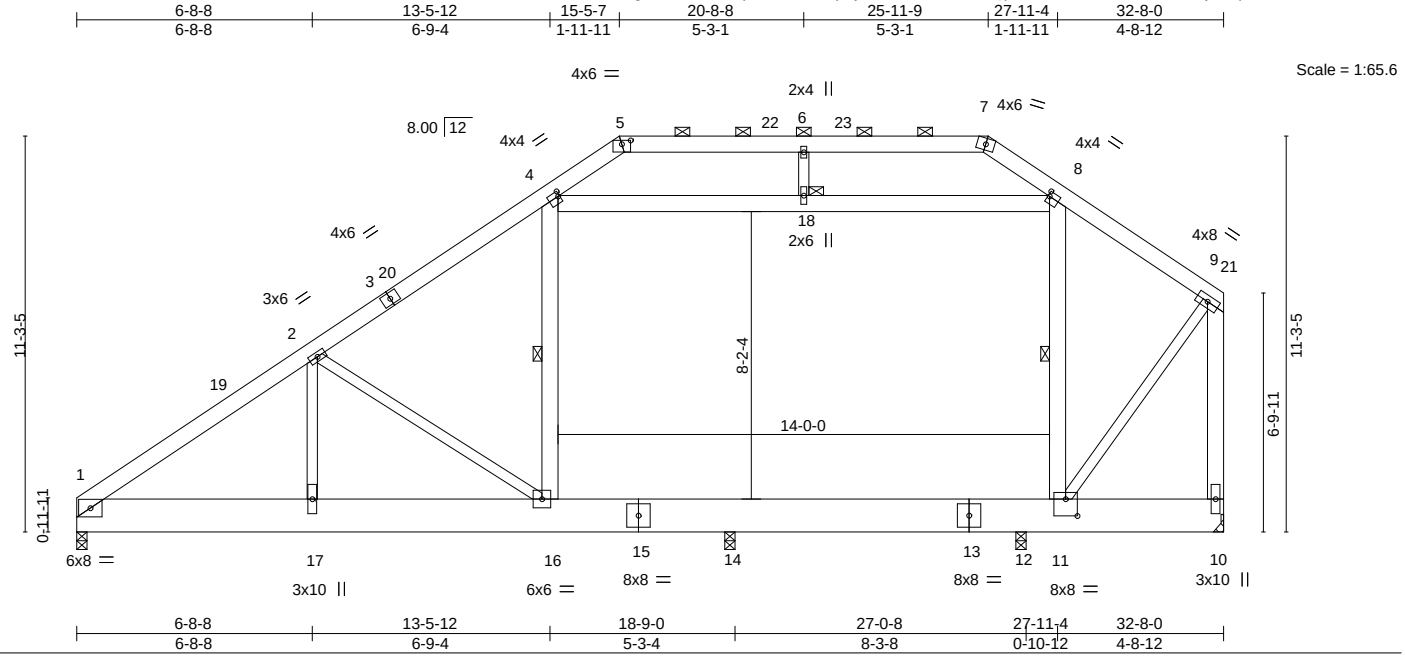

Plate Offsets (X,Y)-- [4:0-0-8,0-1-12], [5:0-3-0,0-1-5], [8:0-0-8,0-1-12], [11:0-4-0,0-5-12]

LOADING (psf)		SPACING-	2-0-0	CSI.		DEFL.	in	(loc)	l/defl	L/d	PLATES	GRIP
TCLL	20.0	Plate Grip DOL	1.15	TC	0.50	Vert(LL)	-0.07	16-17	>999	360	MT20	244/190
TCDL	10.0	Lumber DOL	1.15	BC	0.54	Vert(CT)	-0.16	16-17	>999	240		
BCLL	0.0 *	Rep Stress Incr	YES	WB	0.94	Horz(CT)	0.01	10	n/a	n/a		
BCDL	10.0	Code IRC2015/TPI2014		Matrix-S		Wind(LL)	0.06	16-17	>999	240	Weight: 360 lb	FT = 20%

LUMBER-

TOP CHORD 2x6 SP No.1
BOT CHORD 2x12 SP No.1
WEBS 2x6 SP No.1 *Except*
2-17,2-16,6-18,9-11: 2x4 SP No.2

BRACING-

TOP CHORD Structural wood sheathing directly applied or 5-9-9 oc purlins, except end verticals, and 2-0-0 oc purlins (6-0-0 max.): 5-7.
BOT CHORD Rigid ceiling directly applied or 10-0-0 oc bracing.
WEBS 1 Row at midpt 4-16, 8-11
JOINTS 1 Brace at Jt(s): 18

REACTIONS. All bearings 0-3-8 except (jt=length) 10=Mechanical.
(lb) - Max Horz 1=255(LC 12)
Max Uplift All uplift 100 lb or less at joint(s) except 12=-761(LC 24)
Max Grav All reactions 250 lb or less at joint(s) except 1=1146(LC 1), 10=1580(LC 1), 12=289(LC 9), 14=1756(LC 20)

FORCES. (lb) - Max. Comp./Max. Ten. - All forces 250 (lb) or less except when shown.
TOP CHORD 1-2=-1756/184, 2-4=-973/167, 4-5=-1006/267, 7-8=-1010/258, 8-9=-912/183, 5-6=-903/242, 6-7=-903/242, 9-10=-1540/258
BOT CHORD 1-17=-289/1404, 16-17=-289/1404, 14-16=-81/711, 12-14=-81/711, 11-12=-81/711
WEBS 4-16=-375/70, 8-11=-468/101, 4-18=-197/382, 8-18=-197/382, 2-17=0/519, 2-16=-864/253, 9-11=-128/1193

NOTES-

1) Unbalanced roof live loads have been considered for this design.
2) Wind: ASCE 7-10; Vult=130mph Vasd=103mph; TCDL=6.0psf; BCDL=6.0psf; h=15ft; Cat. II; Exp C; Enclosed; MWFRS (envelope) and C-C Exterior(2) 0-1-12 to 4-6-9, Interior(1) 4-6-9 to 15-6-5, Exterior(2) 15-6-5 to 21-8-15, Interior(1) 21-8-15 to 25-10-11, Exterior(2) 25-10-11 to 32-1-6, Interior(1) 32-1-6 to 32-5-4 zone;C-C for members and forces & MWFRS for reactions shown; Lumber DOL=1.60 plate grip DOL=1.60
3) Provide adequate drainage to prevent water ponding.
4) This truss has been designed for a 10.0 psf bottom chord live load nonconcurrent with any other live loads.
5) * This truss has been designed for a live load of 30.0psf on the bottom chord in all areas where a rectangle 3-6-0 tall by 2-0-0 wide will fit between the bottom chord and any other members.
6) Ceiling dead load (10.0 psf) on member(s). 4-18, 8-18; Wall dead load (5.0psf) on member(s).4-16, 8-11
7) Bottom chord live load (40.0 psf) and additional bottom chord dead load (10.0 psf) applied only to room. 14-16, 12-14, 11-12
8) Refer to girder(s) for truss to truss connections.
9) Provide mechanical connection (by others) of truss to bearing plate capable of withstanding 761 lb uplift at joint 12.
10) Graphical purlin representation does not depict the size or the orientation of the purlin along the top and/or bottom chord.
11) Attic room checked for L/360 deflection.

April 5,2023

ENGINEERING BY TRENCO A MiTek Affiliate
818 Soundside Road
Edenton, NC 27932

Job	Truss	Truss Type	Qty	Ply	Lot 97 South Creek
J0423-1503	A4	PIGGYBACK ATTIC	1	2	I57566171 Job Reference (optional)

Comtech, Inc, Fayetteville, NC - 28314, 8.430 s Jan 6 2022 MiTek Industries, Inc. Tue Apr 4 10:42:34 2023 Page 1

ID:g1aKfXs3SSmp0NcU8a5MpuyxuRE-asq93o3qB6inxh4TpFcKvUYof_DlS05zdI06iUzU7AJ

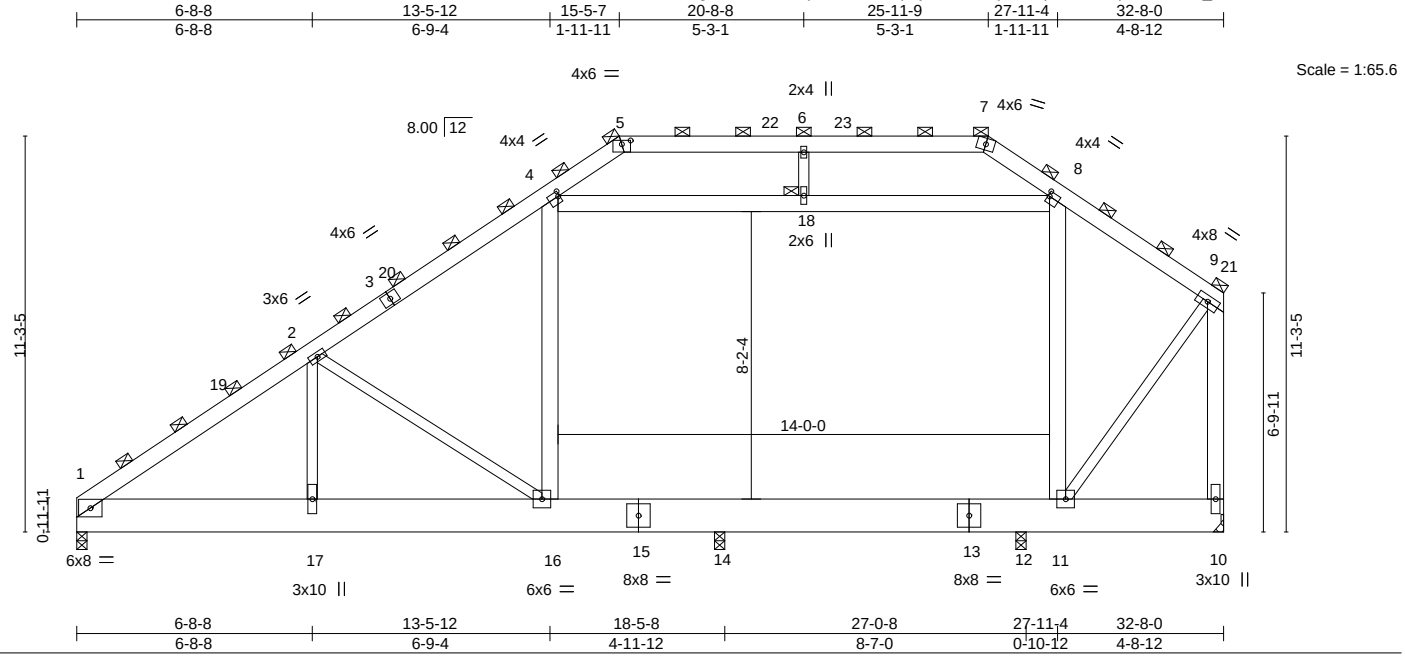

Plate Offsets (X,Y)-- [4:0-0-8,0-1-12], [5:0-3-0,0-1-5], [8:0-0-8,0-1-12]

LOADING (psf)		SPACING-	4-0-0	CSI.		DEFL.	in	(loc)	l/defl	L/d	PLATES	GRIP
TCLL	20.0	Plate Grip DOL	1.15	TC	0.54	Vert(LL)	-0.07	16-17	>999	360	MT20	244/190
TCDL	10.0	Lumber DOL	1.15	BC	0.58	Vert(CT)	-0.15	16-17	>999	240		
BCLL	0.0 *	Rep Stress Incr	NO	WB	0.40	Horz(CT)	0.01	10	n/a	n/a		
BCDL	10.0	Code IRC2015/TPI2014		Matrix-S		Wind(LL)	0.06	16-17	>999	240	Weight: 720 lb	FT = 20%

LUMBER-

TOP CHORD 2x6 SP No.1
BOT CHORD 2x12 SP No.1
WEBS 2x6 SP No.1 *Except*
2-17,2-16,6-18,9-11: 2x4 SP No.2

BRACING-

TOP CHORD 2-0-0 oc purlins (6-0-0 max.), except end verticals
(Switched from sheeted: Spacing > 2-8-0).
BOT CHORD Rigid ceiling directly applied or 10-0-0 oc bracing.
JOINTS 1 Brace at Jt(s): 5, 9, 7, 18

REACTIONS. All bearings 0-3-8 except (jt=length) 10=Mechanical.
(lb) - Max Horz 1=510(LC 12)
Max Uplift All uplift 100 lb or less at joint(s) 10 except 12=-1281(LC 24)
Max Grav All reactions 250 lb or less at joint(s) except 1=2219(LC 1), 10=2973(LC 1), 12=608(LC 9), 14=3527(LC 20)

FASTEN TRUSS TO BEARING FOR THE UPLIFT REACTION SHOWN WHILE PERMITTING NO UPWARD MOVEMENT OF THE BEARING.

FORCES. (lb) - Max. Comp./Max. Ten. - All forces 250 (lb) or less except when shown.
TOP CHORD 1-2=-3387/368, 2-4=-1823/332, 4-5=-2000/534, 7-8=-2006/515, 8-9=-1701/361, 5-6=-1793/483, 6-7=-1793/483, 9-10=-2873/508
BOT CHORD 1-17=-574/2678, 16-17=-574/2678, 14-16=-157/1295, 12-14=-157/1295, 11-12=-157/1295
WEBS 4-16=-821/143, 8-11=-986/180, 4-18=-365/832, 8-18=-365/832, 2-17=0/1035, 2-16=-1728/508, 6-18=0/326, 9-11=-249/2170

NOTES-

1) 2-ply truss to be connected together with 10d (0.131"x3") nails as follows:
Top chords connected as follows: 2x6 - 2 rows staggered at 0-9-0 oc.
Bottom chords connected as follows: 2x12 - 2 rows staggered at 0-9-0 oc.
Webs connected as follows: 2x6 - 2 rows staggered at 0-9-0 oc, 2x4 - 1 row at 0-9-0 oc.
2) All loads are considered equally applied to all plies, except if noted as front (F) or back (B) face in the LOAD CASE(S) section. Ply to ply connections have been provided to distribute only loads noted as (F) or (B), unless otherwise indicated.
3) Unbalanced roof live loads have been considered for this design.
4) Wind: ASCE 7-10; Vult=130mph Vasd=103mph; TCDL=6.0psf; BCDL=6.0psf; h=15ft; Cat. II; Exp C; Enclosed; MWFRS (envelope) and C-C Exterior(2) 0-1-12 to 4-6-9, Interior(1) 4-6-9 to 15-6-4, Exterior(2) 15-6-4 to 21-8-15, Interior(1) 21-8-15 to 25-10-12, Exterior(2) 25-10-12 to 32-1-6, Interior(1) 32-1-6 to 32-5-4 zone;C-C for members and forces & MWFRS for reactions shown; Lumber DOL=1.60 plate grip DOL=1.60
5) Provide adequate drainage to prevent water ponding.
6) This truss has been designed for a 10.0 psf bottom chord live load nonconcurrent with any other live loads.
7) * This truss has been designed for a live load of 30.0psf on the bottom chord in all areas where a rectangle 3-6-0 tall by 2-0-0 wide will fit between the bottom chord and any other members.
8) Ceiling dead load (10.0 psf) on member(s). 4-18, 8-18; Wall dead load (5.0psf) on member(s).4-16, 8-11
9) Bottom chord live load (40.0 psf) and additional bottom chord dead load (10.0 psf) applied only to room. 14-16, 12-14, 11-12
10) Refer to girder(s) for truss to truss connections.
11) Provide mechanical connection (by others) of truss to bearing plate capable of withstanding 100 lb uplift at joint(s) 10 except (jt=lb) 12=1281.
12) Graphical purlin representation does not depict the size or the orientation of the purlin along the top and/or bottom chord.

Continued on page 2

NORTH CAROLINA PROFESSIONAL SEAL 036322 ENGINEER ERIC A. GILBERT

April 5,2023

ENGINEERING BY TRENCO A MiTek Affiliate
818 Soundside Road
Edenton, NC 27932

NOTES-

13) N/A

14) Attic room checked for L/360 deflection.

Job	Truss	Truss Type	Qty	Ply	Lot 97 South Creek
J0423-1503	A5	PIGGYBACK ATTIC	1	2	I57566172 Job Reference (optional)

Comtech, Inc, Fayetteville, NC - 28314, 8.430 s Jan 6 2022 MiTek Industries, Inc. Tue Apr 4 10:42:36 2023 Page 1

ID:g1aKfXs3SSmp0NcU8a5MpuyxuRE-WEyvUT54jkyUB_Eswgeo_vd5CoqRwtLG43VDmMzU7AH

6-8-8	13-5-12	15-5-7	20-8-8	25-11-9	27-11-4	37-3-4	41-5-0	42-8-0
6-8-8	6-9-4	1-11-11	5-3-1	5-3-1	1-11-11	9-4-0	4-1-12	1-3-0

Scale = 1:80.8

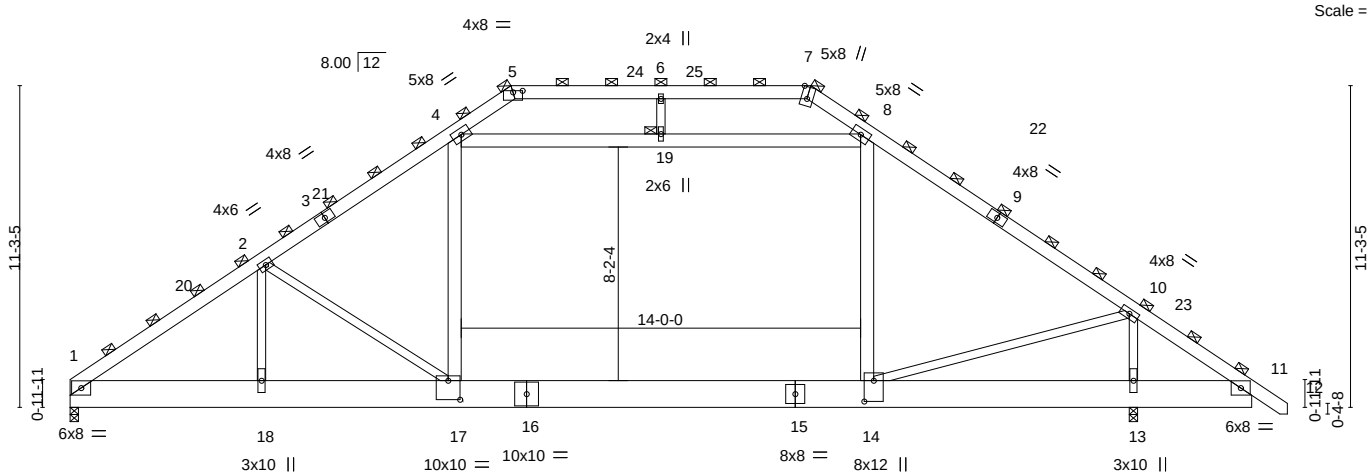

6-8-8	13-5-12	27-11-4	37-3-4	41-5-0
6-8-8	6-9-4	14-5-8	9-4-0	4-1-12

Plate Offsets (X,Y)-- [5:0-4-0,0-0-10], [7:0-5-0,Edge], [14:0-8-12,0-4-0], [17:0-5-0,0-8-0]

LOADING (psf)		SPACING- 4-0-0		CSI.		DEFL.	in	(loc)	l/defl	L/d	PLATES	GRIP
TCLL	20.0	Plate Grip DOL	1.15	TC	0.66	Vert(LL)	-0.25	14-17	>999	360	MT20	244/190
TCDL	10.0	Lumber DOL	1.15	BC	0.95	Vert(CT)	-0.48	14-17	>935	240		
BCLL	0.0 *	Rep Stress Incr	NO	WB	0.61	Horz(CT)	0.03	13	n/a	n/a		
BCDL	10.0	Code IRC2015/TPI2014		Matrix-S		Wind(LL)	0.17	17	>999	240	Weight: 847 lb	FT = 20%

LUMBER-

TOP CHORD 2x6 SP No.1
BOT CHORD 2x12 SP No.1
WEBS 2x4 SP No.2 *Except*
4-17,8-14,4-8: 2x6 SP No.1

BRACING-

TOP CHORD 2-0-0 oc purlins (6-0-0 max.)
(Switched from sheeted: Spacing > 2-8-0).
BOT CHORD Rigid ceiling directly applied or 6-0-0 oc bracing.
JOINTS 1 Brace at Jt(s): 5, 7, 19

REACTIONS. (size) 1=0-3-8, 13=0-3-8
Max Horz 1=-524(LC 10)
Max Grav 1=4069(LC 20), 13=5143(LC 2)

FORCES. (lb) - Max. Comp./Max. Ten. - All forces 250 (lb) or less except when shown.
TOP CHORD 1-2=-6357/163, 2-4=-5432/80, 4-5=-2190/368, 7-8=-2167/388, 8-10=-5448/0, 10-11=-553/755, 5-6=-1990/304, 6-7=-1990/304
BOT CHORD 1-18=0/5390, 17-18=0/5390, 14-17=0/4386, 13-14=-411/569, 11-13=-411/569
WEBS 4-17=0/1774, 8-14=0/1563, 4-19=-2688/0, 8-19=-2688/0, 2-18=-128/785, 10-13=-5538/672, 2-17=-1407/625, 10-14=0/5037, 6-19=0/477

NOTES-

1) 2-ply truss to be connected together with 10d (0.131"x3") nails as follows:
Top chords connected as follows: 2x6 - 2 rows staggered at 0-9-0 oc.
Bottom chords connected as follows: 2x12 - 2 rows staggered at 0-9-0 oc.
Webs connected as follows: 2x6 - 2 rows staggered at 0-9-0 oc, 2x4 - 1 row at 0-9-0 oc.
2) All loads are considered equally applied to all plies, except if noted as front (F) or back (B) face in the LOAD CASE(S) section. Ply to ply connections have been provided to distribute only loads noted as (F) or (B), unless otherwise indicated.
3) Unbalanced roof live loads have been considered for this design.
4) Wind: ASCE 7-10; Vult=130mph Vasd=103mph; TCDL=6.0psf; BCDL=6.0psf; h=15ft; Cat. II; Exp C; Enclosed; MWFRS (envelope) and C-C Exterior(2) 0-1-12 to 4-6-9, Interior(1) 4-6-9 to 15-6-4, Exterior(2) 15-6-4 to 21-8-15, Interior(1) 21-8-15 to 25-10-12, Exterior(2) 25-10-12 to 32-1-6, Interior(1) 32-1-6 to 42-6-7 zone; cantilever right exposed ;C-C for members and forces & MWFRS for reactions shown; Lumber DOL=1.60 plate grip DOL=1.60
5) Provide adequate drainage to prevent water ponding.
6) This truss has been designed for a 10.0 psf bottom chord live load nonconcurrent with any other live loads.
7) * This truss has been designed for a live load of 30.0psf on the bottom chord in all areas where a rectangle 3-6-0 tall by 2-0-0 wide will fit between the bottom chord and any other members.
8) Ceiling dead load (10.0 psf) on member(s). 4-19, 8-19; Wall dead load (5.0psf) on member(s).4-17, 8-14
9) Bottom chord live load (40.0 psf) and additional bottom chord dead load (10.0 psf) applied only to room. 14-17
10) Graphical purlin representation does not depict the size or the orientation of the purlin along the top and/or bottom chord.
11) Attic room checked for L/360 deflection.

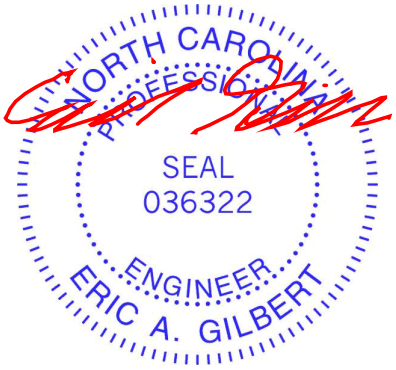

April 5,2023

ENGINEERING BY TRENCO A MiTek Affiliate
818 Soundside Road
Edenton, NC 27932

Job	Truss	Truss Type	Qty	Ply	Lot 97 South Creek
J0423-1503	A6	PIGGYBACK ATTIC	3	1	I57566173 Job Reference (optional)

Comtech, Inc, Fayetteville, NC - 28314, 8.430 s Jan 6 2022 MiTek Industries, Inc. Tue Apr 4 10:42:37 2023 Page 1

ID:g1aKfXs3SSmp0NcU8a5MpuyxuRE-_RWHhp6iU14Lo8p2UNA1X6AHoCB1fH5PjEmIpzU7AG

6-8-8	13-5-12	15-5-7	20-8-8	25-11-9	27-11-4	37-3-4	41-5-0	42-8-0
6-8-8	6-9-4	1-11-11	5-3-1	5-3-1	1-11-11	9-4-0	4-1-12	1-3-0

Scale = 1:80.8

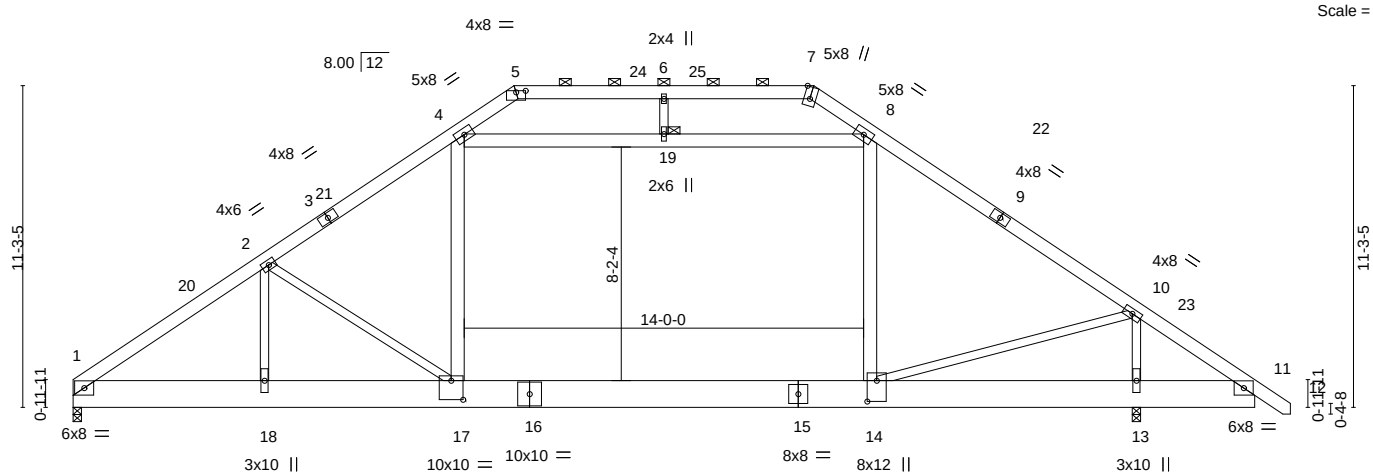

6-8-8	13-5-12	27-11-4	37-3-4	41-5-0
6-8-8	6-9-4	14-5-8	9-4-0	4-1-12

Plate Offsets (X,Y)-- [5:0-4-0,0-0-10], [7:0-5-0,Edge], [14:0-8-12,0-4-0], [17:0-5-0,0-8-0]

LOADING (psf)		**SPACING-** 2-0-0	**CSI.**		**DEFL.**	in	(loc)	l/defl	L/d	**PLATES**	**GRIP**
TCLL	20.0	Plate Grip DOL 1.15	TC	0.61	Vert(LL)	-0.25	14-17	>999	360	MT20	244/190
TCDL	10.0	Lumber DOL 1.15	BC	0.87	Vert(CT)	-0.48	14-17	>935	240		
BCLL	0.0 *	Rep Stress Incr YES	WB	0.77	Horz(CT)	0.03	13	n/a	n/a		
BCDL	10.0	Code IRC2015/TPI2014	Matrix-S		Wind(LL)	0.17	17	>999	240	Weight: 423 lb	FT = 20%

LUMBER-

TOP CHORD 2x6 SP No.1
BOT CHORD 2x12 SP No.1
WEBS 2x4 SP No.2 *Except*
4-17,8-14,4-8: 2x6 SP No.1

BRACING-

TOP CHORD Structural wood sheathing directly applied or 4-4-0 oc purlins, except 2-0-0 oc purlins (6-0-0 max.): 5-7.
BOT CHORD Rigid ceiling directly applied or 4-3-4 oc bracing.
JOINTS 1 Brace at Jt(s): 19

REACTIONS. (size) 1=0-3-8, 13=0-3-8
Max Horz 1=-262(LC 10)
Max Grav 1=2035(LC 20), 13=2572(LC 2)

FORCES. (lb) - Max. Comp./Max. Ten. - All forces 250 (lb) or less except when shown.
TOP CHORD 1-2=-3179/82, 2-4=-2716/40, 4-5=-1094/184, 7-8=-1083/194, 8-10=-2725/0, 10-11=-276/378, 5-6=-994/152, 6-7=-994/152
BOT CHORD 1-18=0/2696, 17-18=0/2696, 14-17=0/2193, 13-14=-205/285, 11-13=-205/285
WEBS 4-17=0/887, 8-14=0/782, 4-19=-1345/0, 8-19=-1345/0, 2-18=-64/392, 10-13=-2769/336, 2-17=-704/313, 10-14=0/2519

NOTES-

1) Unbalanced roof live loads have been considered for this design.
2) Wind: ASCE 7-10; Vult=130mph Vasd=103mph; TCDL=6.0psf; BCDL=6.0psf; h=15ft; Cat. II; Exp C; Enclosed; MWFRS (envelope) and C-C Exterior(2) 0-1-12 to 4-6-9, Interior(1) 4-6-9 to 15-6-5, Exterior(2) 15-6-5 to 21-8-15, Interior(1) 21-8-15 to 25-10-11, Exterior(2) 25-10-11 to 32-1-6, Interior(1) 32-1-6 to 42-6-7 zone; cantilever right exposed ;C-C for members and forces & MWFRS for reactions shown; Lumber DOL=1.60 plate grip DOL=1.60
3) Provide adequate drainage to prevent water ponding.
4) This truss has been designed for a 10.0 psf bottom chord live load nonconcurrent with any other live loads.
5) * This truss has been designed for a live load of 30.0psf on the bottom chord in all areas where a rectangle 3-6-0 tall by 2-0-0 wide will fit between the bottom chord and any other members.
6) Ceiling dead load (10.0 psf) on member(s). 4-19, 8-19; Wall dead load (5.0psf) on member(s).4-17, 8-14
7) Bottom chord live load (40.0 psf) and additional bottom chord dead load (10.0 psf) applied only to room. 14-17
8) Graphical purlin representation does not depict the size or the orientation of the purlin along the top and/or bottom chord.
9) Attic room checked for L/360 deflection.

April 5,2023

ENGINEERING BY TRENCO A MiTek Affiliate
818 Soundside Road
Edenton, NC 27932

Job	Truss	Truss Type	Qty	Ply	Lot 97 South Creek
J0423-1503	A7	PIGGYBACK ATTIC	7	1	I57566174 Job Reference (optional)

Comtech, Inc, Fayetteville, NC - 28314, 8.430 s Jan 6 2022 MiTek Industries, Inc. Tue Apr 4 10:42:38 2023 Page 1

ID:g1aKfXs3SSmp0NcU8a5MpuyxuRE-Sd3fv96KFLCCQINF25hG4KjRocZmOpoZYN_KrFzU7AF

1-3-0	6-8-8	13-5-12	15-5-7	20-8-8	25-11-9	27-11-4	34-8-8	41-5-0
1-3-0	6-8-8	6-9-4	1-11-11	5-3-1	5-3-1	1-11-11	6-9-4	6-8-8

Scale = 1:80.8

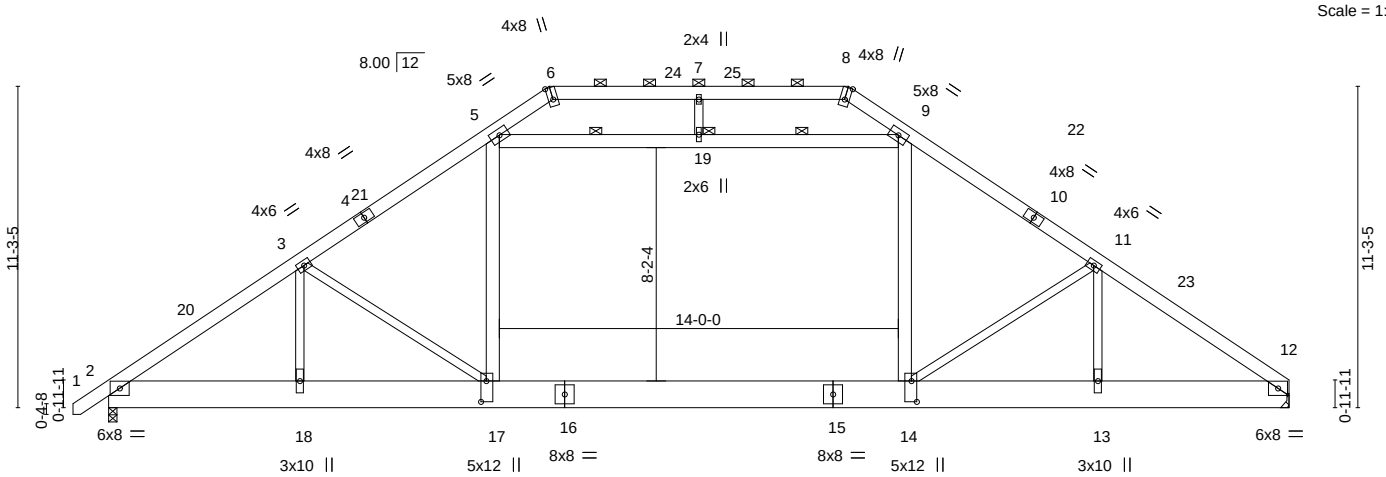

6-8-8	13-5-12	27-11-4	34-8-8	41-5-0
6-8-8	6-9-4	14-5-8	6-9-4	6-8-8

Plate Offsets (X,Y)-- [6:0-5-2,Edge], [8:0-5-2,Edge], [14:0-8-12,0-2-4], [17:0-8-12,0-2-4]

LOADING (psf)		**SPACING-** 2-0-0	**CSI.**		**DEFL.**	in	(loc)	l/defl	L/d	**PLATES**	**GRIP**
TCLL	20.0	Plate Grip DOL 1.15	TC	0.66	Vert(LL)	-0.17	14-17	>999	360	MT20	244/190
TCDL	10.0	Lumber DOL 1.15	BC	0.71	Vert(CT)	-0.31	14-17	>999	240		
BCLL	0.0 *	Rep Stress Incr YES	WB	0.48	Horz(CT)	0.05	12	n/a	n/a		
BCDL	10.0	Code IRC2015/TPI2014	Matrix-S		Wind(LL)	0.12	17	>999	240	Weight: 423 lb	FT = 20%

LUMBER-

TOP CHORD 2x6 SP No.1
BOT CHORD 2x12 SP No.1
WEBS 2x4 SP No.2 *Except*
5-17,9-14,5-9: 2x6 SP No.1

BRACING-

TOP CHORD Structural wood sheathing directly applied or 4-1-4 oc purlins, except 2-0-0 oc purlins (5-6-15 max.): 6-8.
BOT CHORD Rigid ceiling directly applied or 10-0-0 oc bracing.
WEBS 1 Row at midpt 5-19, 9-19
JOINTS 1 Brace at Jt(s): 19

REACTIONS. (size) 2=0-3-8, 12=Mechanical
Max Horz 2=262(LC 9)
Max Grav 2=2344(LC 20), 12=2272(LC 21)

FORCES. (lb) - Max. Comp./Max. Ten. - All forces 250 (lb) or less except when shown.
TOP CHORD 2-3=-3474/109, 3-5=-3385/75, 5-6=-1181/237, 8-9=-1181/239, 9-11=-3387/84, 11-12=-3481/109, 6-7=-1074/210, 7-8=-1074/210
BOT CHORD 2-18=0/2921, 17-18=0/2921, 14-17=0/2729, 13-14=0/2755, 12-13=0/2755
WEBS 5-17=0/1147, 9-14=0/1149, 5-19=-1765/0, 9-19=-1765/0, 3-18=-328/147, 11-13=-324/147, 3-17=-431/298, 11-14=-442/303, 7-19=0/270

NOTES-

1) Unbalanced roof live loads have been considered for this design.
2) Wind: ASCE 7-10; Vult=130mph Vasd=103mph; TCDL=6.0psf; BCDL=6.0psf; h=15ft; Cat. II; Exp C; Enclosed; MWFRS (envelope) and C-C Exterior(2) -1-1-7 to 3-3-6, Interior(1) 3-3-6 to 15-6-5, Exterior(2) 15-6-5 to 21-8-15, Interior(1) 21-8-15 to 25-10-11, Exterior(2) 25-10-11 to 32-1-6, Interior(1) 32-1-6 to 41-3-4 zone;C-C for members and forces & MWFRS for reactions shown; Lumber DOL=1.60 plate grip DOL=1.60
3) Provide adequate drainage to prevent water ponding.
4) This truss has been designed for a 10.0 psf bottom chord live load nonconcurrent with any other live loads.
5) * This truss has been designed for a live load of 30.0psf on the bottom chord in all areas where a rectangle 3-6-0 tall by 2-0-0 wide will fit between the bottom chord and any other members.
6) Ceiling dead load (10.0 psf) on member(s). 5-19, 9-19; Wall dead load (5.0psf) on member(s).5-17, 9-14
7) Bottom chord live load (40.0 psf) and additional bottom chord dead load (10.0 psf) applied only to room. 14-17
8) Refer to girder(s) for truss to truss connections.
9) Graphical purlin representation does not depict the size or the orientation of the purlin along the top and/or bottom chord.
10) Attic room checked for L/360 deflection.

April 5,2023

ENGINEERING BY TRENCO A MiTek Affiliate
818 Soundside Road
Edenton, NC 27932

Job	Truss	Truss Type	Qty	Ply	Lot 97 South Creek
J0423-1503	A8-GE	GABLE	1	1	I57566175
					Job Reference (optional)

Comtech, Inc, Fayetteville, NC - 28314, 8.430 s Jan 6 2022 MiTek Industries, Inc. Tue Apr 4 10:42:41 2023 Page 1

ID:g1aKfXs3SSmp0NcU8a5MpuyxuRE-sCloXB9DYGanHl6qjDEzhyL?0peSb8j?ELC_RazU7AC

1-3-0	6-8-8	13-5-12	15-5-7	20-8-8	25-11-9	27-11-4	34-8-8	41-5-0
1-3-0	6-8-8	6-9-4	1-11-11	5-3-1	5-3-1	1-11-11	6-9-4	6-8-8

Scale = 1:80.8

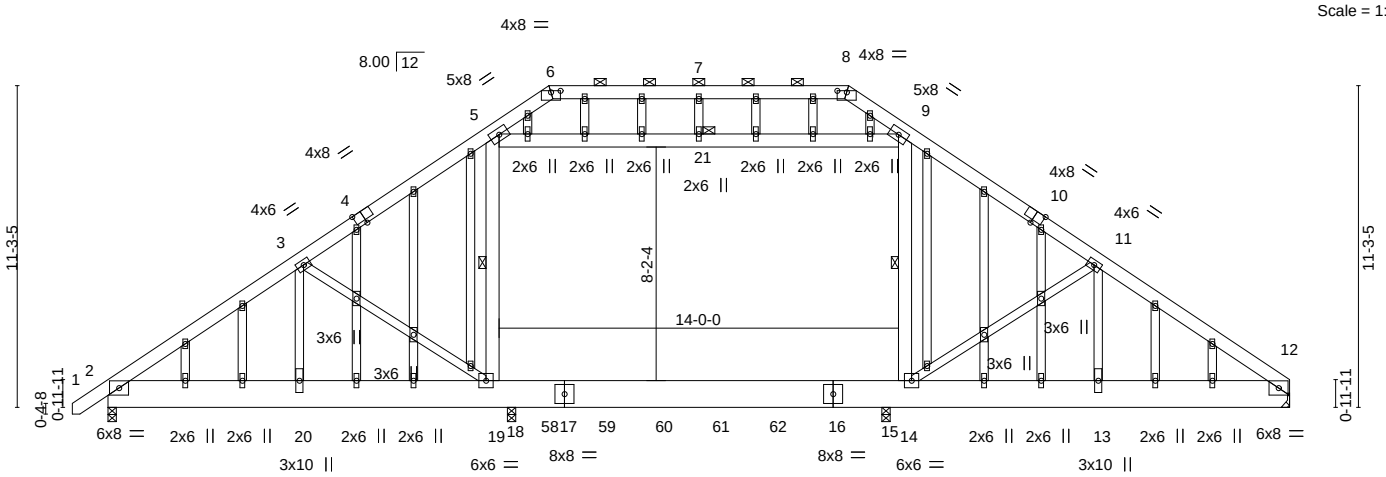

6-8-8	13-5-12	14-0-0	27-5-0	27-11-4	34-8-8	41-5-0
6-8-8	6-9-4	0-6-4	13-5-0	0-6-4	6-9-4	6-8-8

Plate Offsets (X,Y)-- [4:0-4-0,Edge], [6:0-4-0,0-0-10], [8:0-4-0,0-0-10], [10:0-4-0,Edge]

LOADING (psf)		SPACING-	2-0-0	CSI.		DEFL.	in	(loc)	l/defl	L/d	PLATES	GRIP
TCLL	20.0	Plate Grip DOL	1.15	TC	0.47	Vert(LL)	-0.08	15-18	>999	360	MT20	244/190
TCDL	10.0	Lumber DOL	1.15	BC	0.45	Vert(CT)	-0.11	15-18	>999	240		
BCLL	0.0 *	Rep Stress Incr	NO	WB	0.60	Horz(CT)	0.00	12	n/a	n/a		
BCDL	10.0	Code IRC2015/TPI2014		Matrix-S		Wind(LL)	-0.01	15-18	>999	240	Weight: 503 lb	FT = 20%

LUMBER-

TOP CHORD 2x6 SP No.1
BOT CHORD 2x12 SP No.1
WEBS 2x4 SP No.2 *Except*
5-19,9-14,5-9: 2x6 SP No.1
OTHERS 2x4 SP No.2

BRACING-

TOP CHORD Structural wood sheathing directly applied or 6-0-0 oc purlins, except 2-0-0 oc purlins (6-0-0 max.): 6-8.
BOT CHORD Rigid ceiling directly applied or 6-0-0 oc bracing.
WEBS 1 Row at midpt 5-19, 9-14
JOINTS 1 Brace at Jt(s): 21

REACTIONS. All bearings 0-3-8 except (jt=length) 12=Mechanical.
(lb) - Max Horz 2=327(LC 5)
Max Uplift All uplift 100 lb or less at joint(s) 18, 15 except 2=-143(LC 36), 12=-135(LC 37)
Max Grav All reactions 250 lb or less at joint(s) except 2=507(LC 28), 12=428(LC 29), 18=2140(LC 42), 15=2103(LC 23)

FORCES. (lb) - Max. Comp./Max. Ten. - All forces 250 (lb) or less except when shown.
TOP CHORD 2-3=-461/181, 3-5=-84/416, 5-6=-879/266, 8-9=-880/267, 9-11=-3/368, 11-12=-463/179, 6-7=-768/244, 7-8=-768/244
BOT CHORD 2-20=-235/389, 19-20=-235/389, 18-19=-315/290, 15-18=-315/290, 14-15=-315/290, 13-14=-101/296, 12-13=-101/296
WEBS 5-19=-975/111, 9-14=-971/63, 5-21=-193/936, 9-21=-193/936, 3-20=-25/267, 11-13=-26/267, 3-19=-539/356, 11-14=-549/359

NOTES-

1) Unbalanced roof live loads have been considered for this design.
2) Wind: ASCE 7-10; Vult=130mph Vasd=103mph; TCDL=6.0psf; BCDL=6.0psf; h=15ft; Cat. II; Exp C; Enclosed; MWFRS (envelope) gable end zone; Lumber DOL=1.60 plate grip DOL=1.60
3) Truss designed for wind loads in the plane of the truss only. For studs exposed to wind (normal to the face), see Standard Industry Gable End Details as applicable, or consult qualified building designer as per ANSI/TPI 1.
4) Provide adequate drainage to prevent water ponding.
5) All plates are 2x4 MT20 unless otherwise indicated.
6) Gable studs spaced at 2-0-0 oc.
7) This truss has been designed for a 10.0 psf bottom chord live load nonconcurrent with any other live loads.
8) * This truss has been designed for a live load of 30.0psf on the bottom chord in all areas where a rectangle 3-6-0 tall by 2-0-0 wide will fit between the bottom chord and any other members.
9) Ceiling dead load (10.0 psf) on member(s). 5-21, 9-21; Wall dead load (5.0psf) on member(s).5-19, 9-14
10) Bottom chord live load (40.0 psf) and additional bottom chord dead load (10.0 psf) applied only to room. 18-19, 15-18, 14-15
11) Refer to girder(s) for truss to truss connections.
12) Provide mechanical connection (by others) of truss to bearing plate capable of withstanding 100 lb uplift at joint(s) 18, 15 except (jt=lb) 2=143, 12=135.
13) Graphical purlin representation does not depict the size or the orientation of the purlin along the top and/or bottom chord.

April 5,2023

Continued on page 2

ENGINEERING BY TRENCO A MiTek Affiliate
818 Soundside Road
Edenton, NC 27932

NOTES-

14) Hanger(s) or other connection device(s) shall be provided sufficient to support concentrated load(s) 44 lb down and 28 lb up at 15-4-4, 44 lb down and 28 lb up at 17-4-4, 44 lb down and 28 lb up at 19-4-4, 44 lb down and 28 lb up at 21-4-4, and 44 lb down and 28 lb up at 23-4-4, and 44 lb down and 28 lb up at 25-4-4 on bottom chord. The design/selection of such connection device(s) is the responsibility of others.
15) Attic room checked for L/360 deflection.

LOAD CASE(S) Standard

1) Dead + Roof Live (balanced): Lumber Increase=1.15, Plate Increase=1.15
   Uniform Loads (plf)
   Vert: 2-19=-20, 14-19=-40, 12-14=-20, 1-6=-60, 8-12=-60, 6-8=-60, 5-9=-20
   Drag: 5-19=-10, 9-14=-10
   Concentrated Loads (lb)
   Vert: 16=-44 58=-44 59=-44 60=-44 61=-44 62=-44

Job	Truss	Truss Type	Qty	Ply	Lot 97 South Creek
J0423-1503	B1-GE	KINGPOST	1	1	I57566176 Job Reference (optional)

Comtech, Inc, Fayetteville, NC - 28314, 8.430 s Jan 6 2022 MiTek Industries, Inc. Tue Apr 4 10:42:43 2023 Page 1

ID:g1aKfXs3SSmp0NcU8a5MpuyxuRE-pbtYysAT4tqVW3GCqeGRnNQNydL038YIhfh5WSzU7AA

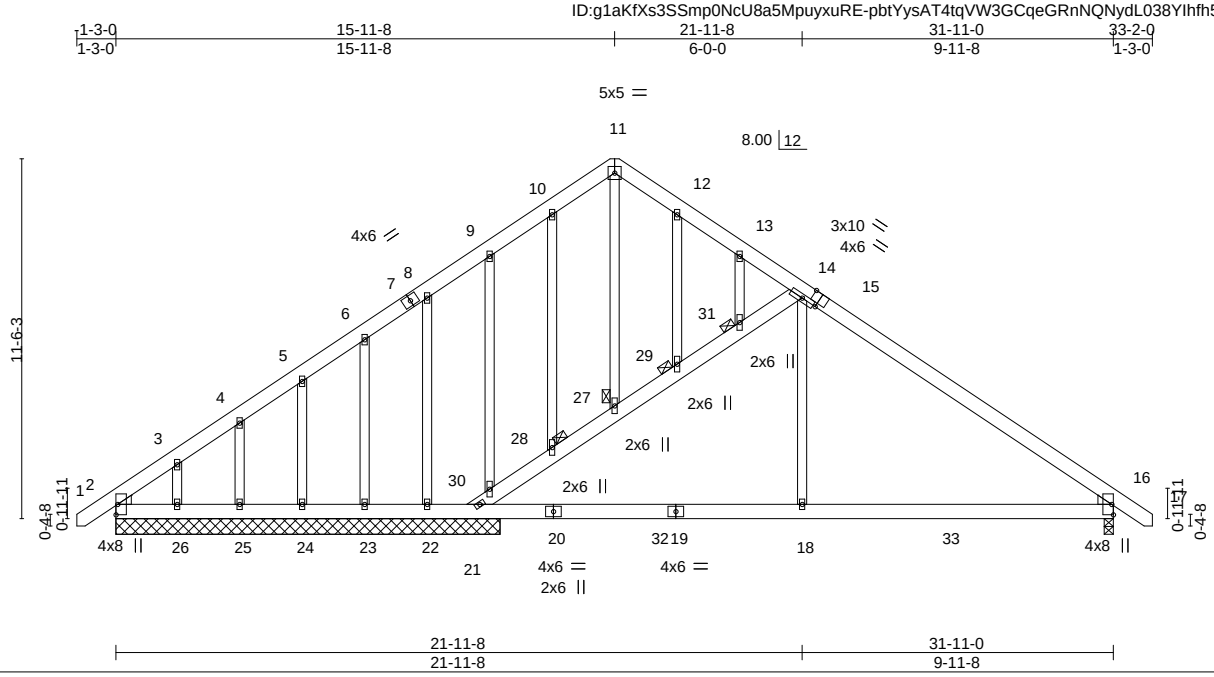

Plate Offsets (X,Y)-- [15:0-3-0,Edge]

LOADING (psf)		SPACING- 2-0-0		CSI.		DEFL. in (loc) l/defl L/d		PLATES	GRIP
TCLL	20.0	Plate Grip DOL	1.15	TC	0.37	Vert(LL) -0.08 16-18 >999 360		MT20	244/190
TCDL	10.0	Lumber DOL	1.15	BC	0.45	Vert(CT) -0.14 16-18 >999 240			
BCLL	0.0 *	Rep Stress Incr	YES	WB	0.19	Horz(CT) -0.02 2 n/a n/a			
BCDL	10.0	Code IRC2015/TPI2014		Matrix-S		Wind(LL) 0.06 16-18 >999 240		Weight: 287 lb	FT = 20%

LUMBER-

TOP CHORD 2x6 SP No.1
BOT CHORD 2x6 SP No.1
WEBS 2x4 SP No.2 *Except*
14-21: 2x6 SP No.1
WEDGE
Left: 2x4 SP No.2 , Right: 2x4 SP No.2

BRACING-

TOP CHORD Structural wood sheathing directly applied or 6-0-0 oc purlins.
BOT CHORD Rigid ceiling directly applied or 10-0-0 oc bracing.
JOINTS 1 Brace at Jt(s): 27, 28, 29, 31

REACTIONS. All bearings 12-3-8 except (jt=length) 16=0-3-8.
(lb) - Max Horz 16=-341(LC 10)
Max Uplift All uplift 100 lb or less at joint(s) 2, 21, 23, 24, 25 except 22=-235(LC 12), 26=-166(LC 12), 16=-179(LC 13)
Max Grav All reactions 250 lb or less at joint(s) 22, 23, 24, 25, 26 except 2=345(LC 21), 21=1091(LC 20), 16=1126(LC 20)

FORCES. (lb) - Max. Comp./Max. Ten. - All forces 250 (lb) or less except when shown.
TOP CHORD 12-13=-261/131, 13-14=-388/157, 14-16=-1318/194, 2-3=-444/209, 3-4=-352/116, 4-5=-310/56, 5-6=-272/27, 8-9=-259/54, 9-10=-286/128
BOT CHORD 2-26=-184/374, 25-26=-184/374, 24-25=-184/374, 23-24=-184/374, 22-23=-184/374, 21-22=-184/374, 18-21=-148/1178, 16-18=-148/1178
WEBS 21-30=-1174/420, 28-30=-1107/387, 27-28=-1110/379, 27-29=-1128/404, 29-31=-1070/354, 14-31=-1145/416, 14-18=0/713

NOTES-

1) Unbalanced roof live loads have been considered for this design.
2) Wind: ASCE 7-10; Vult=130mph Vasd=103mph; TCDL=6.0psf; BCDL=6.0psf; h=15ft; Cat. II; Exp C; Enclosed; MWFRS (envelope) gable end zone and C-C Exterior(2) zone;C-C for members and forces & MWFRS for reactions shown; Lumber DOL=1.60 plate grip DOL=1.60
3) All plates are 2x4 MT20 unless otherwise indicated.
4) This truss has been designed for a 10.0 psf bottom chord live load nonconcurrent with any other live loads.
5) * This truss has been designed for a live load of 30.0psf on the bottom chord in all areas where a rectangle 3-6-0 tall by 2-0-0 wide will fit between the bottom chord and any other members, with BCDL = 10.0psf.
6) Provide mechanical connection (by others) of truss to bearing plate capable of withstanding 100 lb uplift at joint(s) 2, 21, 23, 24, 25 except (jt=lb) 22=235, 26=166, 16=179.

April 5,2023

ENGINEERING BY TRENCO A MiTek Affiliate
818 Soundside Road
Edenton, NC 27932

Job	Truss	Truss Type	Qty	Ply	Lot 97 South Creek
J0423-1503	B2	COMMON	2	1	I57566177 Job Reference (optional)

Comtech, Inc, Fayetteville, NC - 28314, 8.430 s Jan 6 2022 MiTek Industries, Inc. Tue Apr 4 10:42:44 2023 Page 1

ID:g1aKfXs3SSmp0NcU8a5MpuyxuRE-HnRw9CB5rByM8DrOOMogJbzXM0floY2RwIRe2vzU7A9

1-3-0	8-0-1	15-11-8	23-10-15	31-11-0	33-2-0
1-3-0	8-0-1	7-11-7	7-11-7	8-0-1	1-3-0

Scale = 1:69.1

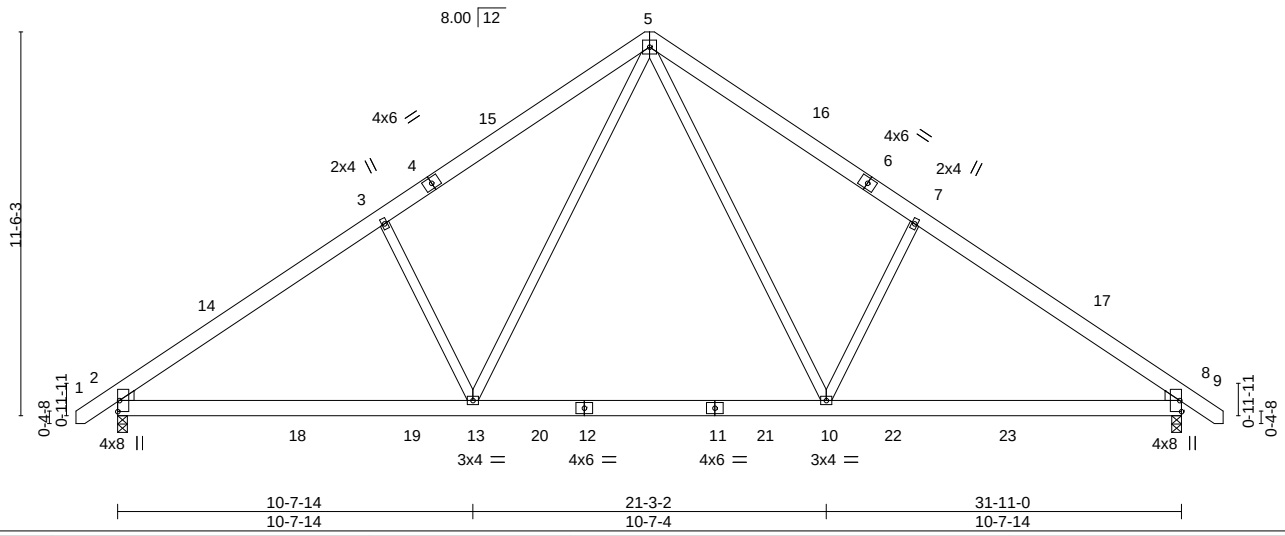

LOADING (psf)			SPACING-	2-0-0	CSI.		DEFL.	in	(loc)	l/defl	L/d	PLATES	GRIP
TCLL	20.0		Plate Grip DOL	1.15	TC	0.40	Vert(LL)	-0.16	10-13	>999	360	MT20	244/190
TCDL	10.0		Lumber DOL	1.15	BC	0.54	Vert(CT)	-0.22	10-13	>999	240		
BCLL	0.0	*	Rep Stress Incr	YES	WB	0.43	Horz(CT)	0.04	8	n/a	n/a		
BCDL	10.0		Code IRC2015/TPI2014		Matrix-S		Wind(LL)	0.04	2-13	>999	240	Weight: 226 lb	FT = 20%

LUMBER-
TOP CHORD 2x6 SP No.1
BOT CHORD 2x6 SP No.1
WEBS 2x4 SP No.2
WEDGE
Left: 2x4 SP No.2 , Right: 2x4 SP No.2

BRACING-
TOP CHORD Structural wood sheathing directly applied or 5-2-15 oc purlins.
BOT CHORD Rigid ceiling directly applied or 10-0-0 oc bracing.

REACTIONS. (size) 2=0-3-8, 8=0-3-8
Max Horz 2=-273(LC 10)
Max Uplift 2=-83(LC 12), 8=-83(LC 13)
Max Grav 2=1552(LC 19), 8=1552(LC 20)

FORCES. (lb) - Max. Comp./Max. Ten. - All forces 250 (lb) or less except when shown.
TOP CHORD 2-3=-2058/367, 3-5=-1918/469, 5-7=-1918/469, 7-8=-2058/367
BOT CHORD 2-13=-153/1777, 10-13=0/1175, 8-10=-159/1594
WEBS 5-10=-165/983, 7-10=-488/308, 5-13=-165/982, 3-13=-488/308

NOTES-
1) Unbalanced roof live loads have been considered for this design.
2) Wind: ASCE 7-10; Vult=130mph Vasd=103mph; TCDL=6.0psf; BCDL=6.0psf; h=15ft; Cat. II; Exp C; Enclosed; MWFRS (envelope) and C-C Exterior(2) -1-1-7 to 3-3-6, Interior(1) 3-3-6 to 15-11-8, Exterior(2) 15-11-8 to 20-4-5, Interior(1) 20-4-5 to 33-0-7 zone;C-C for members and forces & MWFRS for reactions shown; Lumber DOL=1.60 plate grip DOL=1.60
3) This truss has been designed for a 10.0 psf bottom chord live load nonconcurrent with any other live loads.
4) * This truss has been designed for a live load of 30.0psf on the bottom chord in all areas where a rectangle 3-6-0 tall by 2-0-0 wide will fit between the bottom chord and any other members, with BCDL = 10.0psf.
5) Provide mechanical connection (by others) of truss to bearing plate capable of withstanding 100 lb uplift at joint(s) 2, 8.

April 5,2023

ENGINEERING BY TRENCO A MiTek Affiliate
818 Soundside Road
Edenton, NC 27932

Job	Truss	Truss Type	Qty	Ply	Lot 97 South Creek
J0423-1503	B3	COMMON	4	1	I57566178 Job Reference (optional)

Comtech, Inc, Fayetteville, NC - 28314, 8.430 s Jan 6 2022 MiTek Industries, Inc. Tue Apr 4 10:42:45 2023 Page 1

ID:g1aKfXs3SSmp0NcU8a5MpuyxuRE-Iz_JNYCjcV4DmNQby3JvsoVi6Q?wX?Ab9yABaLzU7A8

1-3-0	8-0-1	15-11-8	23-10-15	31-11-0
1-3-0	8-0-1	7-11-7	7-11-7	8-0-1

Scale = 1:68.0

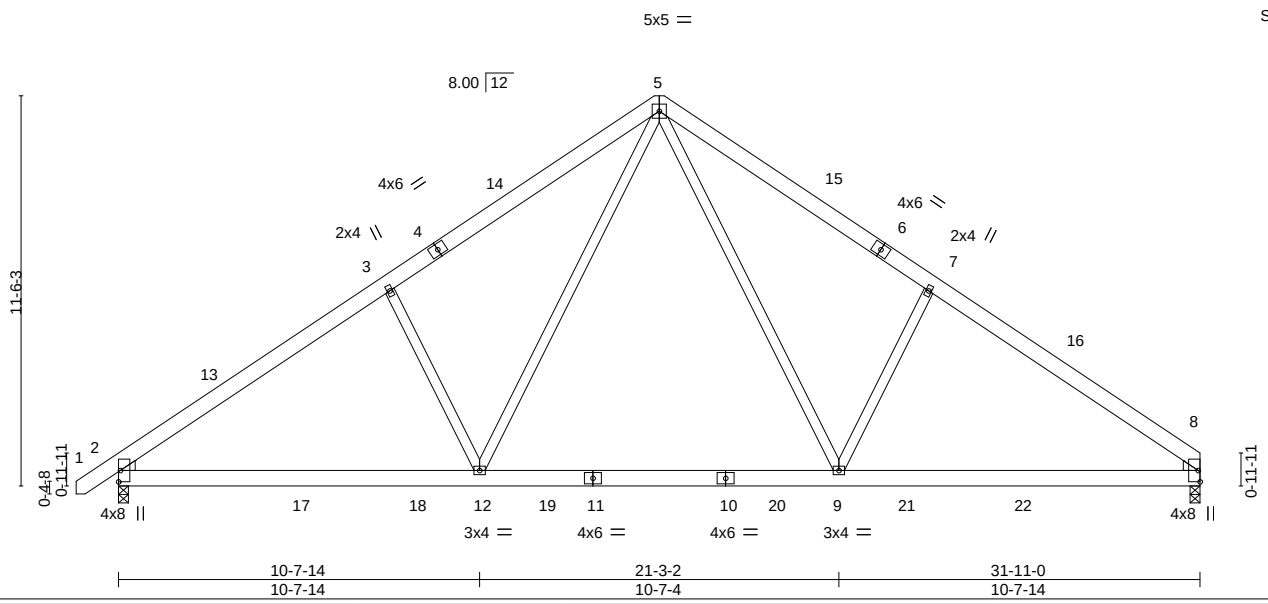

LOADING (psf)			SPACING- 2-0-0		CSI.		DEFL.	in	(loc)	l/defl	L/d	PLATES	GRIP
TCLL	20.0		Plate Grip DOL	1.15	TC	0.40	Vert(LL)	-0.16	9-12	>999	360	MT20	244/190
TCDL	10.0		Lumber DOL	1.15	BC	0.55	Vert(CT)	-0.22	9-12	>999	240		
BCLL	0.0	*	Rep Stress Incr	YES	WB	0.44	Horz(CT)	0.04	8	n/a	n/a		
BCDL	10.0		Code IRC2015/TPI2014		Matrix-S		Wind(LL)	0.04	2-12	>999	240	Weight: 223 lb	FT = 20%

LUMBER-
TOP CHORD 2x6 SP No.1
BOT CHORD 2x6 SP No.1
WEBS 2x4 SP No.2
WEDGE
Left: 2x4 SP No.2 , Right: 2x4 SP No.2

BRACING-
TOP CHORD Structural wood sheathing directly applied or 5-2-6 oc purlins.
BOT CHORD Rigid ceiling directly applied or 10-0-0 oc bracing.

REACTIONS. (size) 2=0-3-8, 8=0-3-8
Max Horz 2=271(LC 11)
Max Uplift 2=-83(LC 12), 8=-65(LC 13)
Max Grav 2=1553(LC 19), 8=1480(LC 20)

FORCES. (lb) - Max. Comp./Max. Ten. - All forces 250 (lb) or less except when shown.
TOP CHORD 2-3=-2059/368, 3-5=-1919/470, 5-7=-1925/484, 7-8=-2064/379
BOT CHORD 2-12=-169/1774, 9-12=0/1173, 8-9=-172/1595
WEBS 5-9=-168/990, 7-9=-489/313, 5-12=-166/982, 3-12=-488/308

NOTES-
1) Unbalanced roof live loads have been considered for this design.
2) Wind: ASCE 7-10; Vult=130mph Vasd=103mph; TCDL=6.0psf; BCDL=6.0psf; h=15ft; Cat. II; Exp C; Enclosed; MWFRS (envelope) and C-C Exterior(2) -1-1-7 to 3-3-6, Interior(1) 3-3-6 to 15-11-8, Exterior(2) 15-11-8 to 20-4-5, Interior(1) 20-4-5 to 31-9-4 zone;C-C for members and forces & MWFRS for reactions shown; Lumber DOL=1.60 plate grip DOL=1.60
3) This truss has been designed for a 10.0 psf bottom chord live load nonconcurrent with any other live loads.
4) * This truss has been designed for a live load of 30.0psf on the bottom chord in all areas where a rectangle 3-6-0 tall by 2-0-0 wide will fit between the bottom chord and any other members, with BCDL = 10.0psf.
5) Provide mechanical connection (by others) of truss to bearing plate capable of withstanding 100 lb uplift at joint(s) 2, 8.

April 5,2023

ENGINEERING BY TRENCO A MiTek Affiliate
818 Soundside Road
Edenton, NC 27932

Job	Truss	Truss Type	Qty	Ply	Lot 97 South Creek
J0423-1503	B4	COMMON GIRDER	1	3	I57566179 Job Reference (optional)

Comtech, Inc, Fayetteville, NC - 28314, 8.430 s Jan 6 2022 MiTek Industries, Inc. Tue Apr 4 10:42:47 2023 Page 1

ID:g1aKfXs3SSmp0NcU8a5MpuyxuRE-hM63oED_76Kx?gaz3ULNxDb0tEiF?nitcGfIfDzU7A6

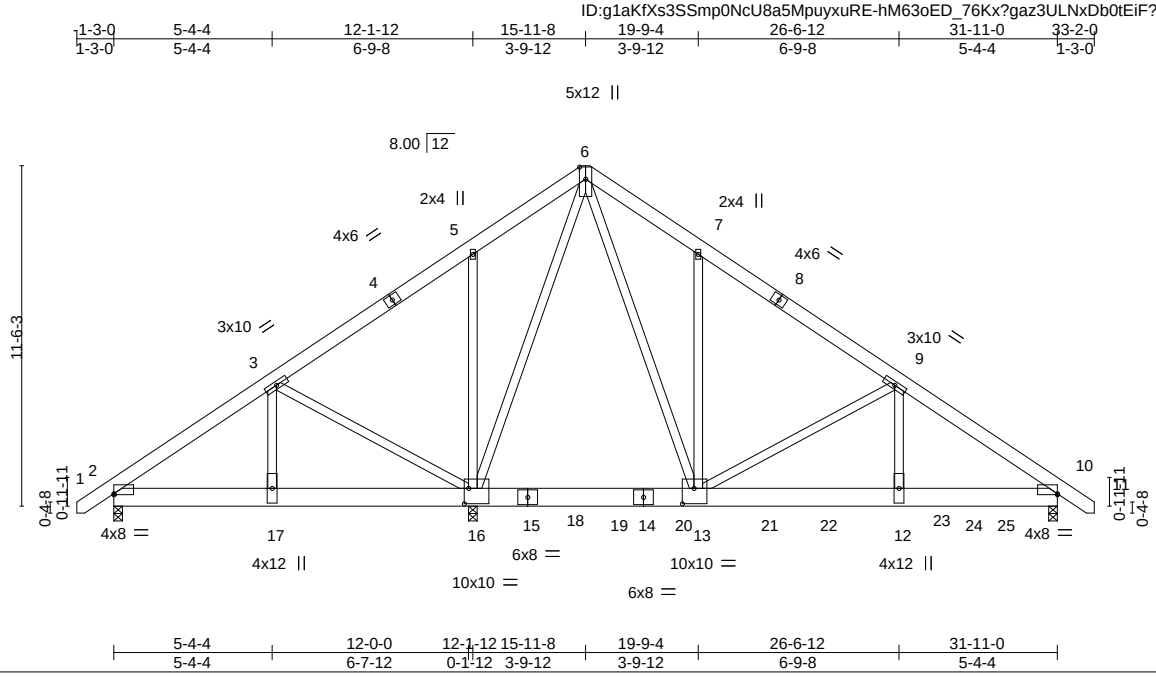

Plate Offsets (X,Y)-- [2:0-0-0,0-0-7], [10:0-0-0,0-0-7], [13:0-4-12,0-6-4], [16:0-1-12,0-6-4]

LOADING (psf)		SPACING- 2-0-0		CSI.		DEFL.	in	(loc)	l/defl	L/d	PLATES	GRIP
TCLL	20.0	Plate Grip DOL	1.15	TC	0.57	Vert(LL)	-0.07	12-13	>999	360	MT20	244/190
TCDL	10.0	Lumber DOL	1.15	BC	0.43	Vert(CT)	-0.16	12-13	>999	240		
BCLL	0.0 *	Rep Stress Incr	NO	WB	0.89	Horz(CT)	0.02	10	n/a	n/a		
BCDL	10.0	Code IRC2015/TPI2014		Matrix-S		Wind(LL)	-0.01	12-13	>999	240	Weight: 854 lb	FT = 20%

LUMBER-
TOP CHORD 2x6 SP No.1
BOT CHORD 2x8 SP 2400F 2.0E
WEBS 2x4 SP No.2

BRACING-
TOP CHORD Structural wood sheathing directly applied or 6-0-0 oc purlins.
BOT CHORD Rigid ceiling directly applied or 6-0-0 oc bracing.

REACTIONS. (size) 2=0-3-8, 16=0-3-8, 10=0-3-8
Max Horz 2=-273(LC 6)
Max Uplift 2=-69(LC 27)
Max Grav 2=385(LC 15), 16=9019(LC 1), 10=8043(LC 20)

FORCES. (lb) - Max. Comp./Max. Ten. - All forces 250 (lb) or less except when shown.
TOP CHORD 2-3=-266/313, 3-5=-300/145, 5-6=-264/78, 6-7=-6137/0, 7-9=-6262/0, 9-10=-11003/0
BOT CHORD 2-17=-331/287, 16-17=-331/287, 13-16=0/2050, 12-13=0/8742, 10-12=0/8742
WEBS 6-13=0/9320, 7-13=-326/289, 9-13=-4228/0, 9-12=0/4885, 6-16=-5890/0, 5-16=-432/192, 3-16=-222/536, 3-17=-594/0

NOTES-
1) 3-ply truss to be connected together with 10d (0.131"x3") nails as follows:
Top chords connected as follows: 2x6 - 2 rows staggered at 0-9-0 oc.
Bottom chords connected as follows: 2x8 - 2 rows staggered at 0-4-0 oc.
Webs connected as follows: 2x4 - 1 row at 0-9-0 oc.
2) All loads are considered equally applied to all plies, except if noted as front (F) or back (B) face in the LOAD CASE(S) section. Ply to ply connections have been provided to distribute only loads noted as (F) or (B), unless otherwise indicated.
3) Unbalanced roof live loads have been considered for this design.
4) Wind: ASCE 7-10; Vult=130mph Vasd=103mph; TCDL=6.0psf; BCDL=6.0psf; h=15ft; Cat. II; Exp C; Enclosed; MWFRS (envelope); Lumber DOL=1.60 plate grip DOL=1.60
5) This truss has been designed for a 10.0 psf bottom chord live load nonconcurrent with any other live loads.
6) * This truss has been designed for a live load of 30.0psf on the bottom chord in all areas where a rectangle 3-6-0 tall by 2-0-0 wide will fit between the bottom chord and any other members, with BCDL = 10.0psf.
7) Provide mechanical connection (by others) of truss to bearing plate capable of withstanding 100 lb uplift at joint(s) 2.
8) Hanger(s) or other connection device(s) shall be provided sufficient to support concentrated load(s) 1676 lb down at 14-0-12, 1676 lb down at 16-0-12, 1676 lb down at 18-0-12, 1676 lb down at 20-0-12, 1676 lb down at 22-0-12, 1676 lb down at 24-0-12, 1560 lb down at 26-0-12, and 1560 lb down at 28-0-12, and 1560 lb down at 30-0-12 on bottom chord. The design/selection of such connection device(s) is the responsibility of others.

LOAD CASE(S) Standard
1) Dead + Roof Live (balanced): Lumber Increase=1.15, Plate Increase=1.15
Uniform Loads (plf)
Vert: 1-6=-60, 6-11=-60, 2-10=-20

NORTH CAROLINA PROFESSIONAL SEAL 036322 ENGINEER ERIC A. GILBERT

April 5,2023

Continued on page 2

ENGINEERING BY TRENCO A MiTek Affiliate
818 Soundside Road
Edenton, NC 27932

LOAD CASE(S) Standard
Concentrated Loads (lb)
Vert: 15=-1676(B) 13=-1676(B) 14=-1676(B) 19=-1676(B) 21=-1676(B) 22=-1676(B) 23=-1560(B) 24=-1560(B) 25=-1560(B)

Job	Truss	Truss Type	Qty	Ply	Lot 97 South Creek
J0423-1503	B5	Jack-Closed	3	1	I57566180 Job Reference (optional)

Comtech, Inc, Fayetteville, NC - 28314, 8.430 s Jan 6 2022 MiTek Industries, Inc. Tue Apr 4 10:42:48 2023 Page 1
ID:g1aKfXs3SSmp0NcU8a5MpuyxuRE-9YgR?aEcuQSndq8AdBscTR7HCe7FkJn1rwPrBgzU7A5

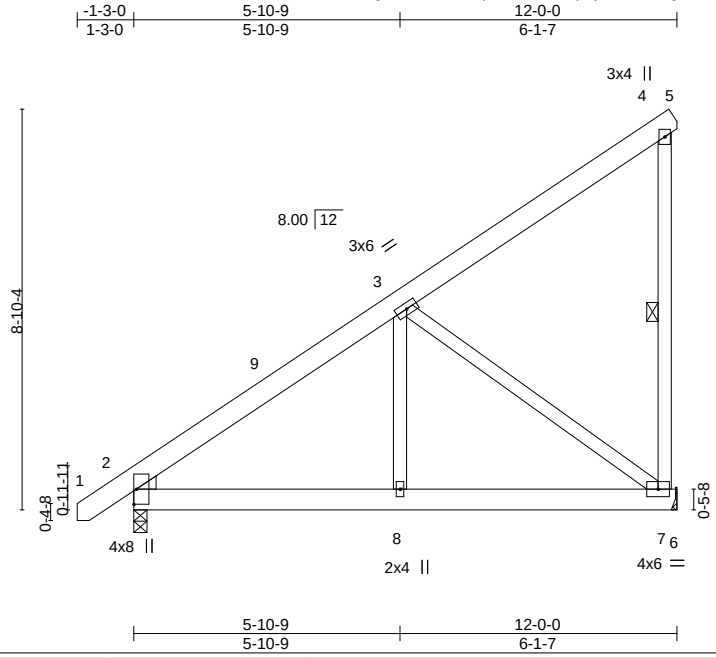

LOADING (psf)			SPACING- 2-0-0		CSI.		DEFL. in (loc) l/defl L/d				PLATES GRIP	
TCLL	20.0		Plate Grip DOL	1.15	TC	0.15	Vert(LL)	-0.01	7-8	>999	360	MT20 244/190
TCDL	10.0		Lumber DOL	1.15	BC	0.12	Vert(CT)	-0.02	7-8	>999	240	
BCLL	0.0	*	Rep Stress Incr	YES	WB	0.51	Horz(CT)	0.00	7	n/a	n/a	
BCDL	10.0		Code IRC2015/TPI2014		Matrix-S		Wind(LL)	0.01	2-8	>999	240	Weight: 94 lb FT = 20%

LUMBER-
TOP CHORD 2x6 SP No.1
BOT CHORD 2x6 SP No.1
WEBS 2x4 SP No.2
WEDGE
Left: 2x4 SP No.2

BRACING-
TOP CHORD Structural wood sheathing directly applied or 6-0-0 oc purlins, except end verticals.
BOT CHORD Rigid ceiling directly applied or 10-0-0 oc bracing.
WEBS 1 Row at midpt 4-7

REACTIONS. (size) 7=Mechanical, 2=0-3-8
Max Horz 2=280(LC 12)
Max Uplift 7=-147(LC 12)
Max Grav 7=508(LC 19), 2=543(LC 1)

FORCES. (lb) - Max. Comp./Max. Ten. - All forces 250 (lb) or less except when shown.
TOP CHORD 2-3=-549/0
BOT CHORD 2-8=-200/467, 7-8=-200/467
WEBS 3-8=0/276, 3-7=-580/248

NOTES-
1) Wind: ASCE 7-10; Vult=130mph Vasd=103mph; TCDL=6.0psf; BCDL=6.0psf; h=15ft; Cat. II; Exp C; Enclosed; MWFRS (envelope) and C-C Exterior(2) -1-1-7 to 3-3-6, Interior(1) 3-3-6 to 11-10-15 zone;C-C for members and forces & MWFRS for reactions shown; Lumber DOL=1.60 plate grip DOL=1.60
2) This truss has been designed for a 10.0 psf bottom chord live load nonconcurrent with any other live loads.
3) * This truss has been designed for a live load of 30.0psf on the bottom chord in all areas where a rectangle 3-6-0 tall by 2-0-0 wide will fit between the bottom chord and any other members.
4) Refer to girder(s) for truss to truss connections.
5) Provide mechanical connection (by others) of truss to bearing plate capable of withstanding 100 lb uplift at joint(s) except (jt=lb) 7=147.

NORTH CAROLINA PROFESSIONAL SEAL 036322 ENGINEER ERIC A. GILBERT

April 5,2023

ENGINEERING BY TRENCO A MiTek Affiliate
818 Soundside Road
Edenton, NC 27932

Job	Truss	Truss Type	Qty	Ply	Lot 97 South Creek
J0423-1503	B6-GE	GABLE	1	1	I57566181 Job Reference (optional)

Comtech, Inc, Fayetteville, NC - 28314, 8.430 s Jan 6 2022 MiTek Industries, Inc. Tue Apr 4 10:42:49 2023 Page 1
ID:g1aKfXs3SSmp0NcU8a5MpuyxuRE-dkEpDwFEfjbeE_jMBvNr0egUZ1UDTt9A4a8Pj6zU7A4

-1-3-0 12-0-0
1-3-0 12-0-0

Scale = 1:51.6

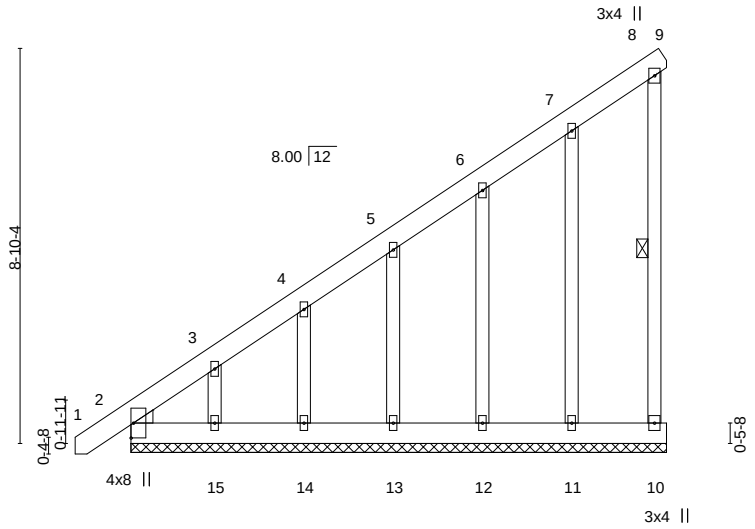

LOADING (psf)			SPACING- 2-0-0		CSI.		DEFL.	in	(loc)	l/defl	L/d	PLATES	GRIP
TCLL	20.0		Plate Grip DOL	1.15	TC	0.05	Vert(LL)	0.00	8	n/r	120	MT20	244/190
TCDL	10.0		Lumber DOL	1.15	BC	0.01	Vert(CT)	0.00	8	n/r	120		
BCLL	0.0	*	Rep Stress Incr	YES	WB	0.12	Horz(CT)	-0.00	10	n/a	n/a		
BCDL	10.0		Code IRC2015/TPI2014		Matrix-S							Weight: 107 lb	FT = 20%

LUMBER-
TOP CHORD 2x6 SP No.1
BOT CHORD 2x6 SP No.1
WEBS 2x4 SP No.2
OTHERS 2x4 SP No.2
WEDGE
Left: 2x4 SP No.2

BRACING-
TOP CHORD Structural wood sheathing directly applied or 6-0-0 oc purlins, except end verticals.
BOT CHORD Rigid ceiling directly applied or 10-0-0 oc bracing.
WEBS 1 Row at midpt 8-10

REACTIONS. All bearings 12-0-0.
(lb) - Max Horz 2=404(LC 12)
Max Uplift All uplift 100 lb or less at joint(s) 10, 2, 11, 12, 13, 14 except 15=-173(LC 12)
Max Grav All reactions 250 lb or less at joint(s) 10, 11, 12, 13, 14, 15 except 2=266(LC 12)

FORCES. (lb) - Max. Comp./Max. Ten. - All forces 250 (lb) or less except when shown.
TOP CHORD 2-3=-479/398, 3-4=-347/287, 4-5=-269/223

NOTES-
1) Wind: ASCE 7-10; Vult=130mph Vasd=103mph; TCDL=6.0psf; BCDL=6.0psf; h=15ft; Cat. II; Exp C; Enclosed; MWFRS (envelope) gable end zone and C-C Exterior(2) zone;C-C for members and forces & MWFRS for reactions shown; Lumber DOL=1.60 plate grip DOL=1.60
2) Truss designed for wind loads in the plane of the truss only. For studs exposed to wind (normal to the face), see Standard Industry Gable End Details as applicable, or consult qualified building designer as per ANSI/TPI 1.
3) All plates are 2x4 MT20 unless otherwise indicated.
4) Gable requires continuous bottom chord bearing.
5) Gable studs spaced at 2-0-0 oc.
6) This truss has been designed for a 10.0 psf bottom chord live load nonconcurrent with any other live loads.
7) * This truss has been designed for a live load of 30.0psf on the bottom chord in all areas where a rectangle 3-6-0 tall by 2-0-0 wide will fit between the bottom chord and any other members.
8) Provide mechanical connection (by others) of truss to bearing plate capable of withstanding 100 lb uplift at joint(s) 10, 2, 11, 12, 13, 14 except (jt=lb) 15=173.

April 5,2023

ENGINEERING BY TRENCO A MiTek Affiliate
818 Soundside Road
Edenton, NC 27932

Job	Truss	Truss Type	Qty	Ply	Lot 97 South Creek
J0423-1503	C1-GE	COMMON SUPPORTED GAB	1	1	I57566182 Job Reference (optional)

Comtech, Inc, Fayetteville, NC - 28314, 8.430 s Jan 6 2022 MiTek Industries, Inc. Tue Apr 4 10:42:50 2023 Page 1

ID:g1aKfXs3SSmp0NcU8a5MpuyxuRE-6xoCQGGsQ1jVs8IYlcv4ZsCfaRqMCKkKIEuyGYzU7A3

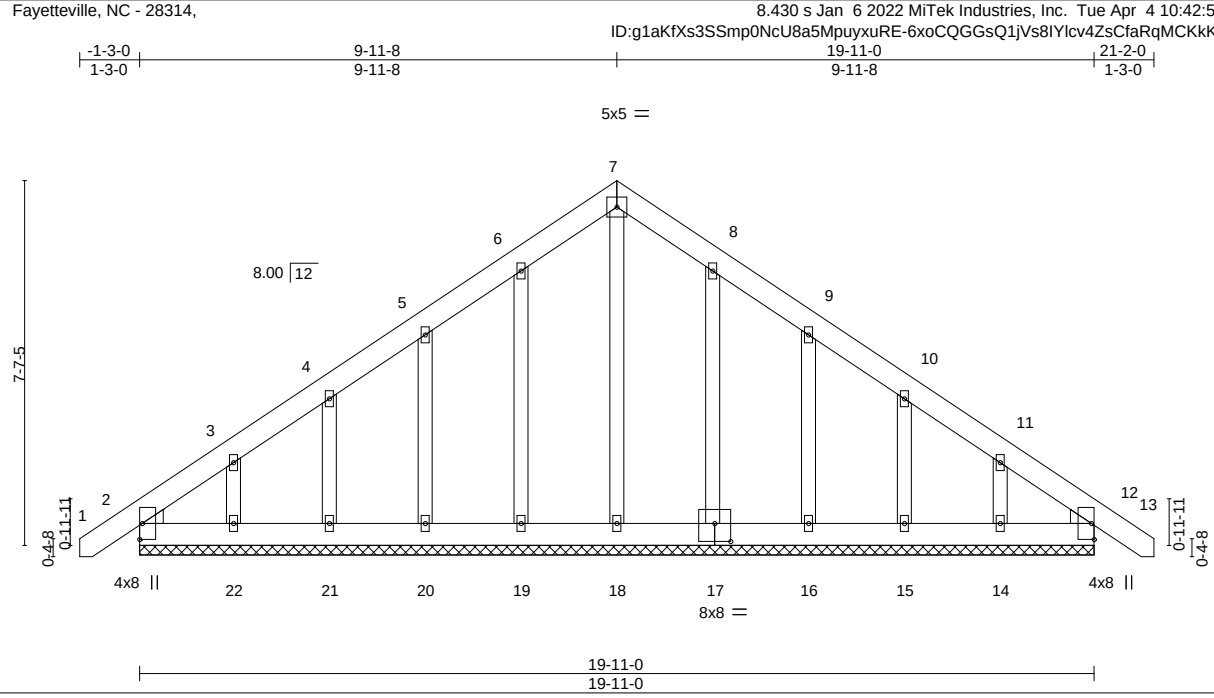

Plate Offsets (X,Y)-- [17:0-4-0,0-4-8]

LOADING (psf)		SPACING-	2-0-0	CSI.		DEFL.	in	(loc)	l/defl	L/d	PLATES	GRIP
TCLL	20.0	Plate Grip DOL	1.15	TC	0.03	Vert(LL)	-0.00	12	n/r	120	MT20	244/190
TCDL	10.0	Lumber DOL	1.15	BC	0.02	Vert(CT)	-0.00	12	n/r	120		
BCLL	0.0 *	Rep Stress Incr	YES	WB	0.10	Horz(CT)	0.00	12	n/a	n/a		
BCDL	10.0	Code IRC2015/TPI2014		Matrix-S							Weight: 162 lb	FT = 20%

LUMBER-
TOP CHORD 2x6 SP No.1
BOT CHORD 2x6 SP No.1
OTHERS 2x4 SP No.2
WEDGE
Left: 2x4 SP No.2 , Right: 2x4 SP No.2

BRACING-
TOP CHORD Structural wood sheathing directly applied or 6-0-0 oc purlins.
BOT CHORD Rigid ceiling directly applied or 10-0-0 oc bracing.

REACTIONS. All bearings 19-11-0.
(lb) - Max Horz 2=-221(LC 10)
Max Uplift All uplift 100 lb or less at joint(s) 2, 19, 20, 21, 17, 16, 15, 12 except 22=-129(LC 12), 14=-120(LC 13)
Max Grav All reactions 250 lb or less at joint(s) 2, 18, 19, 20, 21, 22, 17, 16, 15, 14, 12

FORCES. (lb) - Max. Comp./Max. Ten. - All forces 250 (lb) or less except when shown.

NOTES-
1) Unbalanced roof live loads have been considered for this design.
2) Wind: ASCE 7-10; Vult=130mph Vasd=103mph; TCDL=6.0psf; BCDL=6.0psf; h=15ft; Cat. II; Exp C; Enclosed; MWFRS (envelope) gable end zone and C-C Exterior(2) zone;C-C for members and forces & MWFRS for reactions shown; Lumber DOL=1.60 plate grip DOL=1.60
3) Truss designed for wind loads in the plane of the truss only. For studs exposed to wind (normal to the face), see Standard Industry Gable End Details as applicable, or consult qualified building designer as per ANSI/TPI 1.
4) All plates are 2x4 MT20 unless otherwise indicated.
5) Gable requires continuous bottom chord bearing.
6) Gable studs spaced at 2-0-0 oc.
7) This truss has been designed for a 10.0 psf bottom chord live load nonconcurrent with any other live loads.
8) * This truss has been designed for a live load of 30.0psf on the bottom chord in all areas where a rectangle 3-6-0 tall by 2-0-0 wide will fit between the bottom chord and any other members.
9) Provide mechanical connection (by others) of truss to bearing plate capable of withstanding 100 lb uplift at joint(s) 2, 19, 20, 21, 17, 16, 15, 12 except (jt=lb) 22=129, 14=120.

April 5,2023

ENGINEERING BY TRENCO A MiTek Affiliate
818 Soundside Road
Edenton, NC 27932

Job	Truss	Truss Type	Qty	Ply	Lot 97 South Creek
J0423-1503	D1-GE	COMMON SUPPORTED GAB	1	1	I57566183 Job Reference (optional)

Comtech, Inc, Fayetteville, NC - 28314, 8.430 s Jan 6 2022 MiTek Industries, Inc. Tue Apr 4 10:42:52 2023 Page 1

ID:g1aKfXs3SSmp0NcU8a5MpuyxuRE-2JwyrxH6yezD6SSxs1xYeHI_6FWvgF2dmYN3KRzU7A1

-1-3-0 | 7-5-8 | 14-11-0 | 16-2-0

1-3-0 | 7-5-8 | 7-5-8 | 1-3-0

Scale = 1:35.6

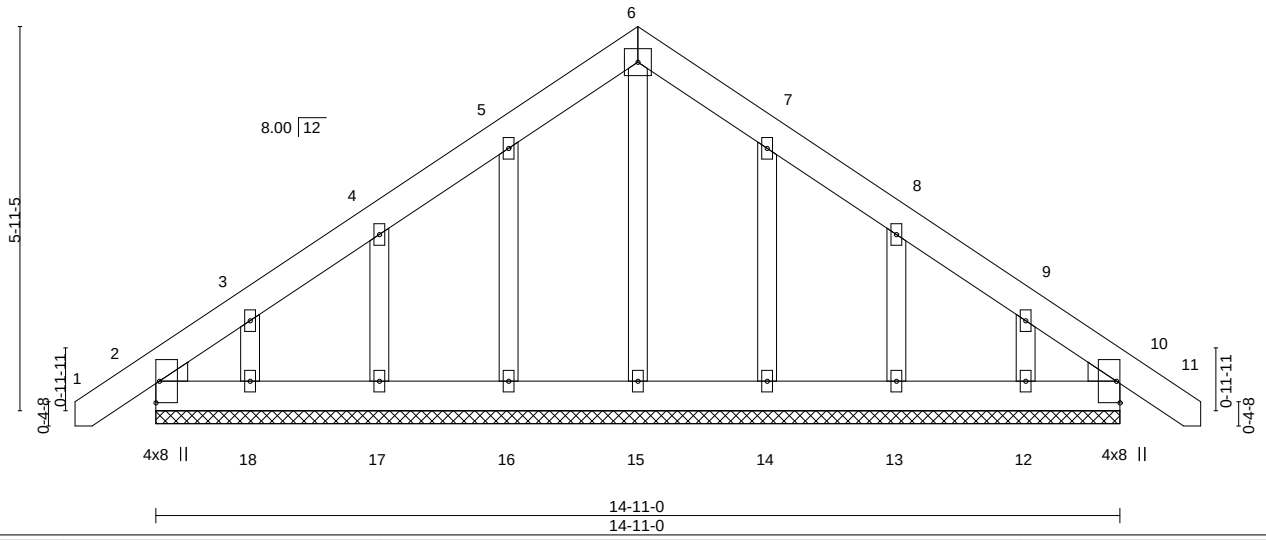

LOADING (psf)		SPACING-	2-0-0	CSI.		DEFL.	in	(loc)	l/defl	L/d	PLATES	GRIP
TCLL	20.0	Plate Grip DOL	1.15	TC	0.03	Vert(LL)	-0.00	10	n/r	120	MT20	244/190
TCDL	10.0	Lumber DOL	1.15	BC	0.01	Vert(CT)	-0.00	10	n/r	120		
BCLL	0.0 *	Rep Stress Incr	YES	WB	0.05	Horz(CT)	0.00	10	n/a	n/a		
BCDL	10.0	Code IRC2015/TPI2014		Matrix-S							Weight: 114 lb	FT = 20%

LUMBER-
TOP CHORD 2x6 SP No.1
BOT CHORD 2x6 SP No.1
OTHERS 2x4 SP No.2
WEDGE
Left: 2x4 SP No.2 , Right: 2x4 SP No.2

BRACING-
TOP CHORD Structural wood sheathing directly applied or 6-0-0 oc purlins.
BOT CHORD Rigid ceiling directly applied or 10-0-0 oc bracing.

REACTIONS. All bearings 14-11-0.
(lb) - Max Horz 2=-171(LC 10)
Max Uplift All uplift 100 lb or less at joint(s) 2, 10, 16, 17, 14, 13, 12 except 18=-108(LC 12)
Max Grav All reactions 250 lb or less at joint(s) 2, 10, 15, 16, 17, 18, 14, 13, 12

FORCES. (lb) - Max. Comp./Max. Ten. - All forces 250 (lb) or less except when shown.

NOTES-
1) Unbalanced roof live loads have been considered for this design.
2) Wind: ASCE 7-10; Vult=130mph Vasd=103mph; TCDL=6.0psf; BCDL=6.0psf; h=15ft; Cat. II; Exp C; Enclosed; MWFRS (envelope) gable end zone and C-C Exterior(2) zone;C-C for members and forces & MWFRS for reactions shown; Lumber DOL=1.60 plate grip DOL=1.60
3) Truss designed for wind loads in the plane of the truss only. For studs exposed to wind (normal to the face), see Standard Industry Gable End Details as applicable, or consult qualified building designer as per ANSI/TPI 1.
4) All plates are 2x4 MT20 unless otherwise indicated.
5) Gable requires continuous bottom chord bearing.
6) Gable studs spaced at 2-0-0 oc.
7) This truss has been designed for a 10.0 psf bottom chord live load nonconcurrent with any other live loads.
8) * This truss has been designed for a live load of 30.0psf on the bottom chord in all areas where a rectangle 3-6-0 tall by 2-0-0 wide will fit between the bottom chord and any other members.
9) Provide mechanical connection (by others) of truss to bearing plate capable of withstanding 100 lb uplift at joint(s) 2, 10, 16, 17, 14, 13, 12 except (jt=lb) 18=108.
10) Beveled plate or shim required to provide full bearing surface with truss chord at joint(s) 2.

April 5,2023

ENGINEERING BY TRENCO A MiTek Affiliate
818 Soundside Road
Edenton, NC 27932

Job	Truss	Truss Type	Qty	Ply	Lot 97 South Creek
J0423-1503	D2	COMMON GIRDER	1	3	I57566184 Job Reference (optional)

Comtech, Inc, Fayetteville, NC - 28314, 8.430 s Jan 6 2022 MiTek Industries, Inc. Tue Apr 4 10:42:53 2023 Page 1
ID:g1aKfXs3SSmp0NcU8a5MpuyxuRE-WWTK2HIkjy54jb17QlSnAUq6OfjLPaMm_C6cttzU7A0

Scale = 1:35.1

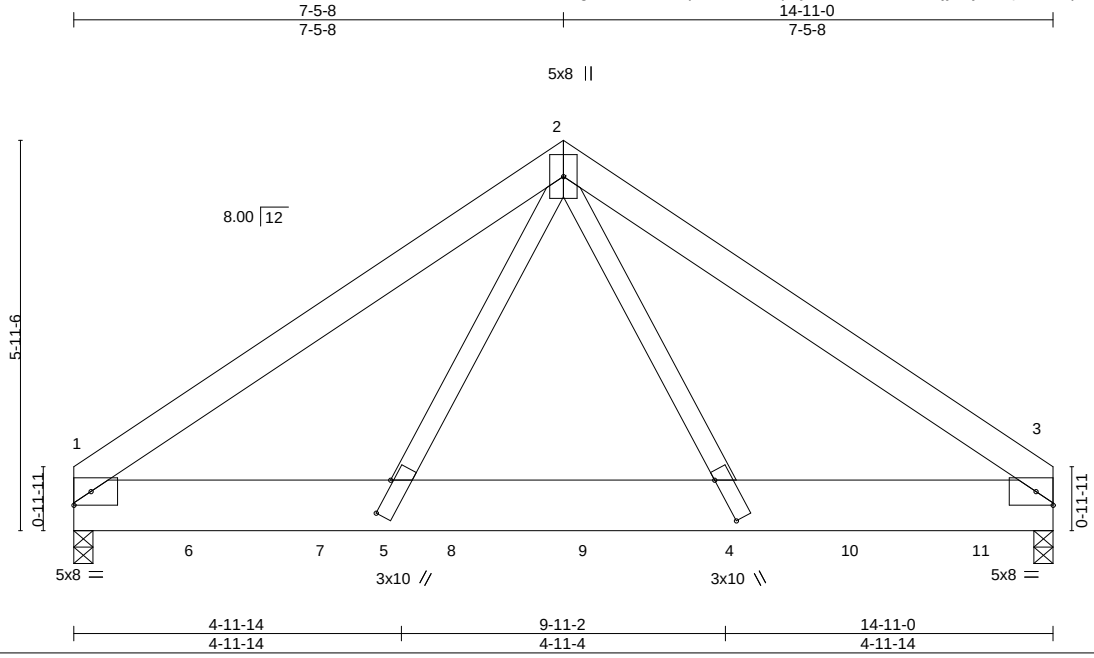

Plate Offsets (X,Y)-- [4:0-8-7,0-0-0], [5:0-6-9,0-0-8]

LOADING (psf)		SPACING- 2-0-0		CSI.		DEFL. in (loc) l/defl L/d					PLATES	GRIP
TCLL	20.0	Plate Grip DOL	1.15	TC	0.25	Vert(LL)	-0.05	4-5	>999	360	MT20	244/190
TCDL	10.0	Lumber DOL	1.15	BC	0.58	Vert(CT)	-0.11	4-5	>999	240		
BCLL	0.0 *	Rep Stress Incr	NO	WB	0.56	Horz(CT)	0.02	3	n/a	n/a		
BCDL	10.0	Code IRC2015/TPI2014		Matrix-S		Wind(LL)	0.00	5	>999	240	Weight: 353 lb	FT = 20%

LUMBER-
TOP CHORD 2x6 SP No.1
BOT CHORD 2x10 SP No.1
WEBS 2x4 SP No.2

BRACING-
TOP CHORD Structural wood sheathing directly applied or 6-0-0 oc purlins.
BOT CHORD Rigid ceiling directly applied or 10-0-0 oc bracing.

REACTIONS. (size) 1=0-3-8, 3=0-3-8
Max Horz 1=127(LC 5)
Max Grav 1=7870(LC 2), 3=8789(LC 2)

FORCES. (lb) - Max. Comp./Max. Ten. - All forces 250 (lb) or less except when shown.
TOP CHORD 1-2=-10535/0, 2-3=-10641/0
BOT CHORD 1-5=0/8486, 4-5=0/5568, 3-4=0/8574
WEBS 2-4=0/6749, 2-5=0/6553

NOTES-
1) 3-ply truss to be connected together with 10d (0.131"x3") nails as follows:
Top chords connected as follows: 2x6 - 2 rows staggered at 0-9-0 oc.
Bottom chords connected as follows: 2x10 - 3 rows staggered at 0-4-0 oc.
Webs connected as follows: 2x4 - 1 row at 0-9-0 oc.
2) All loads are considered equally applied to all plies, except if noted as front (F) or back (B) face in the LOAD CASE(S) section. Ply to ply connections have been provided to distribute only loads noted as (F) or (B), unless otherwise indicated.
3) Unbalanced roof live loads have been considered for this design.
4) Wind: ASCE 7-10; Vult=130mph Vasd=103mph; TCDL=6.0psf; BCDL=6.0psf; h=15ft; Cat. II; Exp C; Enclosed; MWFRS (envelope); Lumber DOL=1.60 plate grip DOL=1.60
5) This truss has been designed for a 10.0 psf bottom chord live load nonconcurrent with any other live loads.
6) * This truss has been designed for a live load of 30.0psf on the bottom chord in all areas where a rectangle 3-6-0 tall by 2-0-0 wide will fit between the bottom chord and any other members.
7) Hanger(s) or other connection device(s) shall be provided sufficient to support concentrated load(s) 2233 lb down at 1-10-4, 2233 lb down at 3-10-4, 2233 lb down at 5-10-4, 2233 lb down at 7-10-4, 2233 lb down at 9-10-4, and 2233 lb down at 11-10-4, and 2234 lb down at 13-10-4 on bottom chord. The design/selection of such connection device(s) is the responsibility of others.

LOAD CASE(S) Standard
1) Dead + Roof Live (balanced): Lumber Increase=1.15, Plate Increase=1.15
Uniform Loads (plf)
Vert: 1-2=-60, 2-3=-60, 1-3=-20
Concentrated Loads (lb)
Vert: 4=-2005(F) 6=-2005(F) 7=-2005(F) 8=-2005(F) 9=-2005(F) 10=-2005(F) 11=-2006(F)

April 5,2023

ENGINEERING BY TRENCO A MiTek Affiliate
818 Soundside Road
Edenton, NC 27932

Job	Truss	Truss Type	Qty	Ply	Lot 97 South Creek
J0423-1503	E1-GE	GABLE	1	1	I57566185 Job Reference (optional)

Comtech, Inc, Fayetteville, NC - 28314, 8.430 s Jan 6 2022 MiTek Industries, Inc. Tue Apr 4 10:42:54 2023 Page 1

ID:g1aKfXs3SSmp0NcU8a5MpuyxuRE-_i1iGdJNUGDxLlcJ_Sz0jiNHE28L88XvDssAPJzU7A?

-1-3-0	7-5-8	14-11-0	16-2-0
1-3-0	7-5-8	7-5-8	1-3-0

Scale = 1:28.8

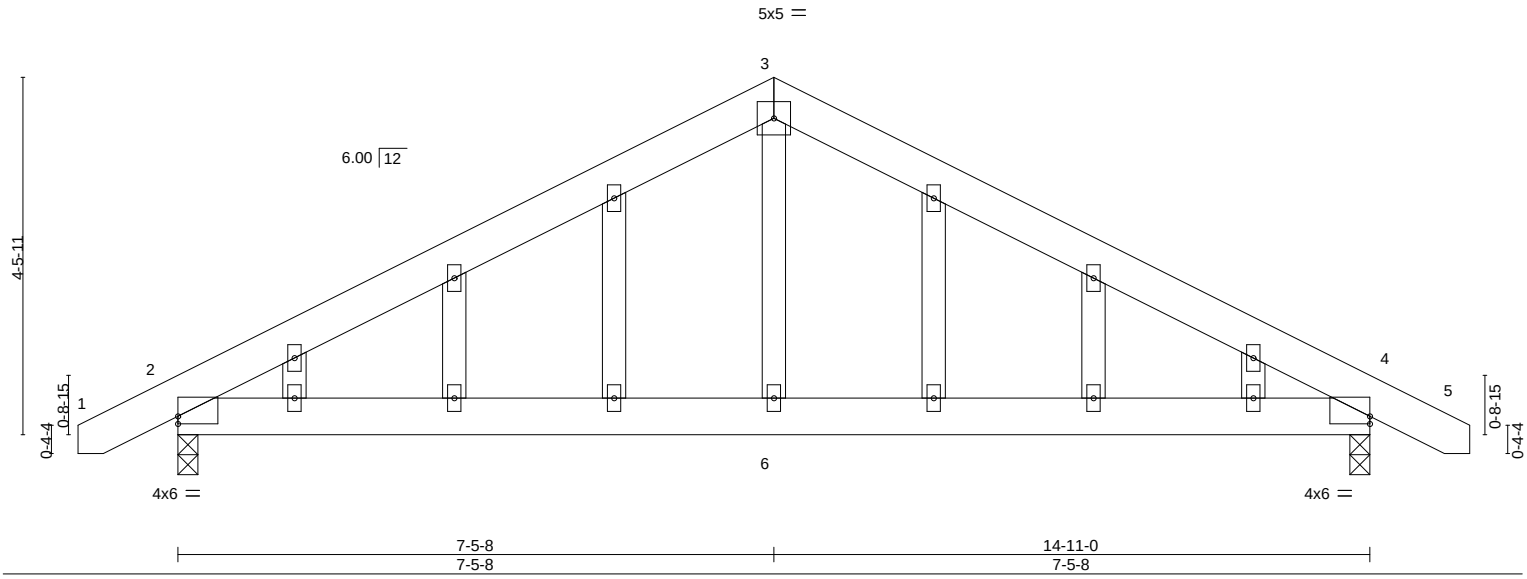

Plate Offsets (X,Y)-- [2:0-0-0,0-1-2], [4:Edge,0-1-2]

LOADING (psf)		SPACING- 2-0-0		CSI.		DEFL.	in	(loc)	l/defl	L/d	PLATES	GRIP
TCLL	20.0	Plate Grip DOL	1.15	TC	0.24	Vert(LL)	0.05	4-6	>999	240	MT20	244/190
TCDL	10.0	Lumber DOL	1.15	BC	0.21	Vert(CT)	-0.04	2-6	>999	240		
BCLL	0.0 *	Rep Stress Incr	YES	WB	0.11	Horz(CT)	0.01	4	n/a	n/a		
BCDL	10.0	Code IRC2015/TPI2014		Matrix-S							Weight: 100 lb	FT = 20%

LUMBER-

TOP CHORD	2x6 SP No.1
BOT CHORD	2x6 SP No.1
WEBS	2x4 SP No.2
OTHERS	2x4 SP No.2

BRACING-

TOP CHORD	Structural wood sheathing directly applied or 6-0-0 oc purlins.
BOT CHORD	Rigid ceiling directly applied or 9-7-8 oc bracing.

REACTIONS. (size) 2=0-3-0, 4=0-3-0
Max Horz 2=86(LC 16)
Max Uplift 2=-174(LC 9), 4=-174(LC 8)
Max Grav 2=660(LC 1), 4=660(LC 1)

FORCES. (lb) - Max. Comp./Max. Ten. - All forces 250 (lb) or less except when shown.

TOP CHORD	2-3=-800/843, 3-4=-800/844
BOT CHORD	2-6=-607/614, 4-6=-607/614
WEBS	3-6=-454/354

NOTES-

1) Unbalanced roof live loads have been considered for this design.
2) Wind: ASCE 7-10; Vult=130mph Vasd=103mph; TCDL=6.0psf; BCDL=6.0psf; h=15ft; Cat. II; Exp C; Enclosed; MWFRS (envelope) gable end zone and C-C Exterior(2) zone; porch left and right exposed;C-C for members and forces & MWFRS for reactions shown; Lumber DOL=1.60 plate grip DOL=1.60
3) Truss designed for wind loads in the plane of the truss only. For studs exposed to wind (normal to the face), see Standard Industry Gable End Details as applicable, or consult qualified building designer as per ANSI/TPI 1.
4) All plates are 2x4 MT20 unless otherwise indicated.
5) Gable studs spaced at 2-0-0 oc.
6) This truss has been designed for a 10.0 psf bottom chord live load nonconcurrent with any other live loads.
7) * This truss has been designed for a live load of 30.0psf on the bottom chord in all areas where a rectangle 3-6-0 tall by 2-0-0 wide will fit between the bottom chord and any other members.
8) Provide mechanical connection (by others) of truss to bearing plate capable of withstanding 100 lb uplift at joint(s) except (jt=lb) 2=174, 4=174.

April 5,2023

ENGINEERING BY TRENCO A MiTek Affiliate
818 Soundside Road
Edenton, NC 27932

Job	Truss	Truss Type	Qty	Ply	Lot 97 South Creek
J0423-1503	E2	COMMON	3	1	I57566186 Job Reference (optional)

Comtech, Inc, Fayetteville, NC - 28314, 8.430 s Jan 6 2022 MiTek Industries, Inc. Tue Apr 4 10:42:55 2023 Page 1

ID:g1aKfXs3SSmp0NcU8a5MpuyxuRE-Sub5TzK?FZLozvBWX9UFGvwSzSUatbp3SWbjxmzU7A_

-1-3-0	7-5-8	14-11-0	16-2-0
1-3-0	7-5-8	7-5-8	1-3-0

Scale = 1:29.6

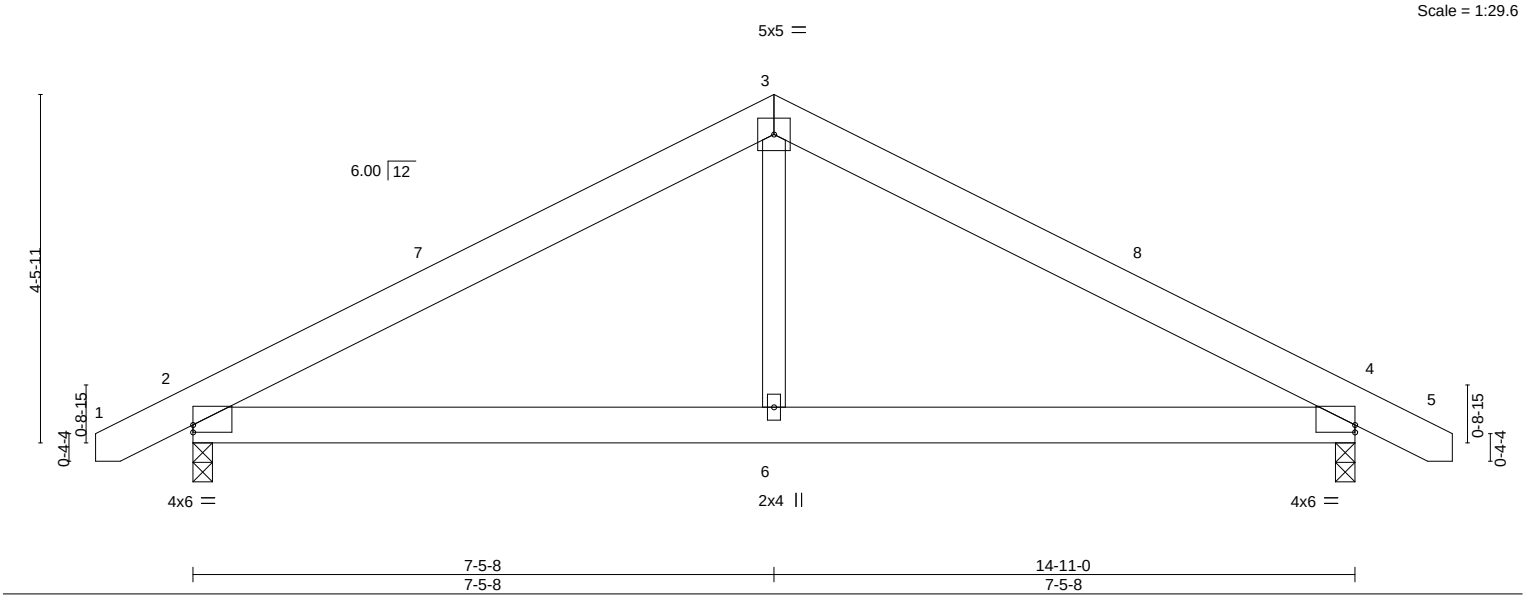

Plate Offsets (X,Y)-- [2:0-0-0,0-1-2], [4:Edge,0-1-2]

LOADING (psf)		SPACING-	2-0-0	CSI.		DEFL.	in	(loc)	l/defl	L/d	PLATES	GRIP
TCLL	20.0	Plate Grip DOL	1.15	TC	0.24	Vert(LL)	0.05	4-6	>999	240	MT20	244/190
TCDL	10.0	Lumber DOL	1.15	BC	0.21	Vert(CT)	-0.04	2-6	>999	240		
BCLL	0.0 *	Rep Stress Incr	YES	WB	0.11	Horz(CT)	0.01	4	n/a	n/a		
BCDL	10.0	Code IRC2015/TPI2014		Matrix-S							Weight: 86 lb	FT = 20%

LUMBER-

TOP CHORD 2x6 SP No.1
BOT CHORD 2x6 SP No.1
WEBS 2x4 SP No.2

BRACING-

TOP CHORD Structural wood sheathing directly applied or 6-0-0 oc purlins.
BOT CHORD Rigid ceiling directly applied or 10-0-0 oc bracing.

REACTIONS. (size) 2=0-3-0, 4=0-3-0
Max Horz 2=56(LC 11)
Max Uplift 2=-134(LC 9), 4=-134(LC 8)
Max Grav 2=660(LC 1), 4=660(LC 1)

FORCES. (lb) - Max. Comp./Max. Ten. - All forces 250 (lb) or less except when shown.
TOP CHORD 2-3=-800/784, 3-4=-800/779
BOT CHORD 2-6=-558/614, 4-6=-558/614
WEBS 3-6=-446/354

NOTES-

1) Unbalanced roof live loads have been considered for this design.
2) Wind: ASCE 7-10; Vult=130mph Vasd=103mph; TCDL=6.0psf; BCDL=6.0psf; h=15ft; Cat. II; Exp C; Enclosed; MWFRS (envelope) and C-C Exterior(2) -1-1-2 to 3-3-11, Interior(1) 3-3-11 to 7-5-8, Exterior(2) 7-5-8 to 11-10-5, Interior(1) 11-10-5 to 16-0-2 zone; porch left and right exposed;C-C for members and forces & MWFRS for reactions shown; Lumber DOL=1.60 plate grip DOL=1.60
3) This truss has been designed for a 10.0 psf bottom chord live load nonconcurrent with any other live loads.
4) * This truss has been designed for a live load of 30.0psf on the bottom chord in all areas where a rectangle 3-6-0 tall by 2-0-0 wide will fit between the bottom chord and any other members.
5) Provide mechanical connection (by others) of truss to bearing plate capable of withstanding 100 lb uplift at joint(s) except (jt=lb) 2=134, 4=134.

NORTH CAROLINA PROFESSIONAL SEAL 036322 ENGINEER ERIC A. GILBERT

April 5,2023

ENGINEERING BY TRENCO A MiTek Affiliate
818 Soundside Road
Edenton, NC 27932

Job	Truss	Truss Type	Qty	Ply	Lot 97 South Creek
J0423-1503	E3	COMMON	2	1	I57566187 Job Reference (optional)

Comtech, Inc, Fayetteville, NC - 28314, 8.430 s Jan 6 2022 MiTek Industries, Inc. Tue Apr 4 10:42:56 2023 Page 1
ID:g1aKfXs3SSmp0NcU8a5MpuyxuRE-w59ThJKd0tTfa3mi5t?Uo7ScOsqnc22ChALHSCzU79z

-1-3-0 | 7-5-8 | 14-11-0
1-3-0 | 7-5-8 | 7-5-8

Scale = 1:29.1

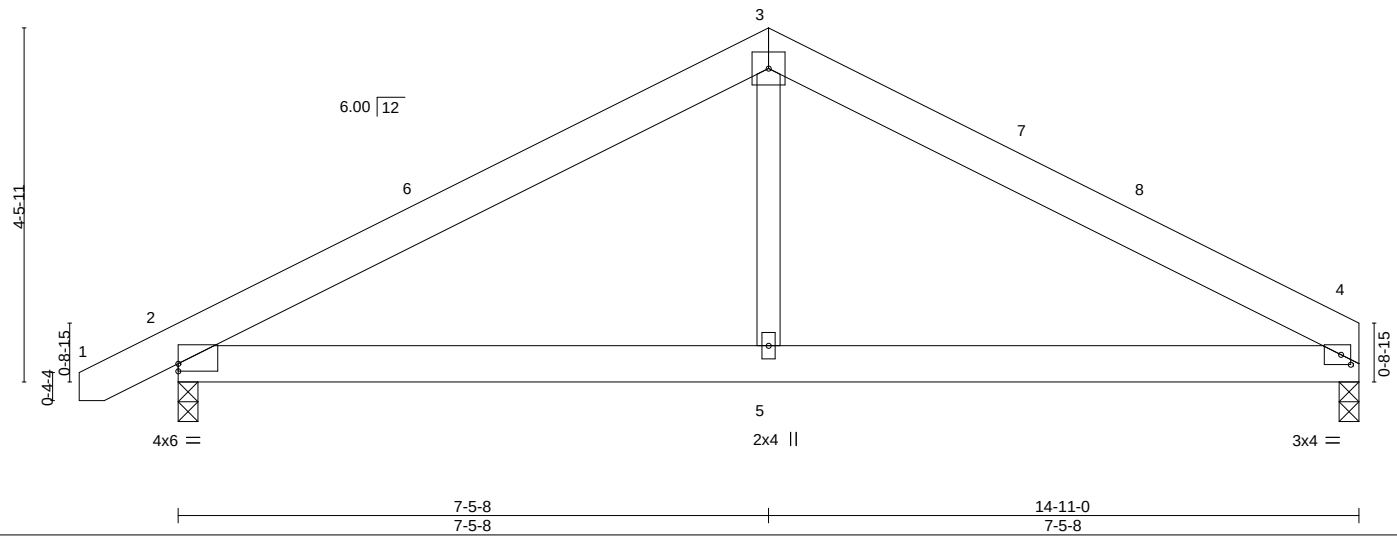

Plate Offsets (X,Y)-- [2:0-0-0,0-1-2], [4:0-1-8,0-1-8]

LOADING (psf)		SPACING- 2-0-0		CSI.		DEFL. in (loc) l/defl L/d					PLATES	GRIP
TCLL	20.0	Plate Grip DOL	1.15	TC	0.26	Vert(LL)	0.05	4-5	>999	240	MT20	244/190
TCDL	10.0	Lumber DOL	1.15	BC	0.21	Vert(CT)	-0.04	4-5	>999	240		
BCLL	0.0 *	Rep Stress Incr	YES	WB	0.11	Horz(CT)	0.01	4	n/a	n/a		
BCDL	10.0	Code IRC2015/TPI2014		Matrix-S							Weight: 83 lb	FT = 20%

LUMBER-
TOP CHORD 2x6 SP No.1
BOT CHORD 2x6 SP No.1
WEBS 2x4 SP No.2

BRACING-
TOP CHORD Structural wood sheathing directly applied or 6-0-0 oc purlins.
BOT CHORD Rigid ceiling directly applied or 9-9-6 oc bracing.

REACTIONS. (size) 4=0-3-0, 2=0-3-0
Max Horz 2=57(LC 11)
Max Uplift 4=-128(LC 8), 2=-113(LC 8)
Max Grav 4=584(LC 1), 2=663(LC 1)

FORCES. (lb) - Max. Comp./Max. Ten. - All forces 250 (lb) or less except when shown.
TOP CHORD 2-3=-807/786, 3-4=-804/799
BOT CHORD 2-5=-589/621, 4-5=-589/621
WEBS 3-5=-450/356

NOTES-
1) Unbalanced roof live loads have been considered for this design.
2) Wind: ASCE 7-10; Vult=130mph Vasd=103mph; TCDL=6.0psf; BCDL=6.0psf; h=15ft; Cat. II; Exp C; Enclosed; MWFRS (envelope) and C-C Exterior(2) -1-1-2 to 3-3-11, Interior(1) 3-3-11 to 7-5-8, Exterior(2) 7-5-8 to 11-10-5, Interior(1) 11-10-5 to 14-9-8 zone; porch left exposed;C-C for members and forces & MWFRS for reactions shown; Lumber DOL=1.60 plate grip DOL=1.60
3) This truss has been designed for a 10.0 psf bottom chord live load nonconcurrent with any other live loads.
4) * This truss has been designed for a live load of 30.0psf on the bottom chord in all areas where a rectangle 3-6-0 tall by 2-0-0 wide will fit between the bottom chord and any other members.
5) Provide mechanical connection (by others) of truss to bearing plate capable of withstanding 100 lb uplift at joint(s) except (jt=lb) 4=128, 2=113.

NORTH CAROLINA PROFESSIONAL SEAL 036322 ENGINEER ERIC A. GILBERT

April 5,2023

ENGINEERING BY TRENCO A MiTek Affiliate
818 Soundside Road
Edenton, NC 27932

Job	Truss	Truss Type	Qty	Ply	Lot 97 South Creek
J0423-1503	F1	Jack-Closed	8	1	I57566188 Job Reference (optional)

Comtech, Inc, Fayetteville, NC - 28314, 8.430 s Jan 6 2022 MiTek Industries, Inc. Tue Apr 4 10:42:57 2023 Page 1
ID:g1aKfXs3SSmp0NcU8a5MpuyxuRE-OHjrufLFnBbWCDKufaXjLK?rlGD2LW_Mvq4q?ezU79y

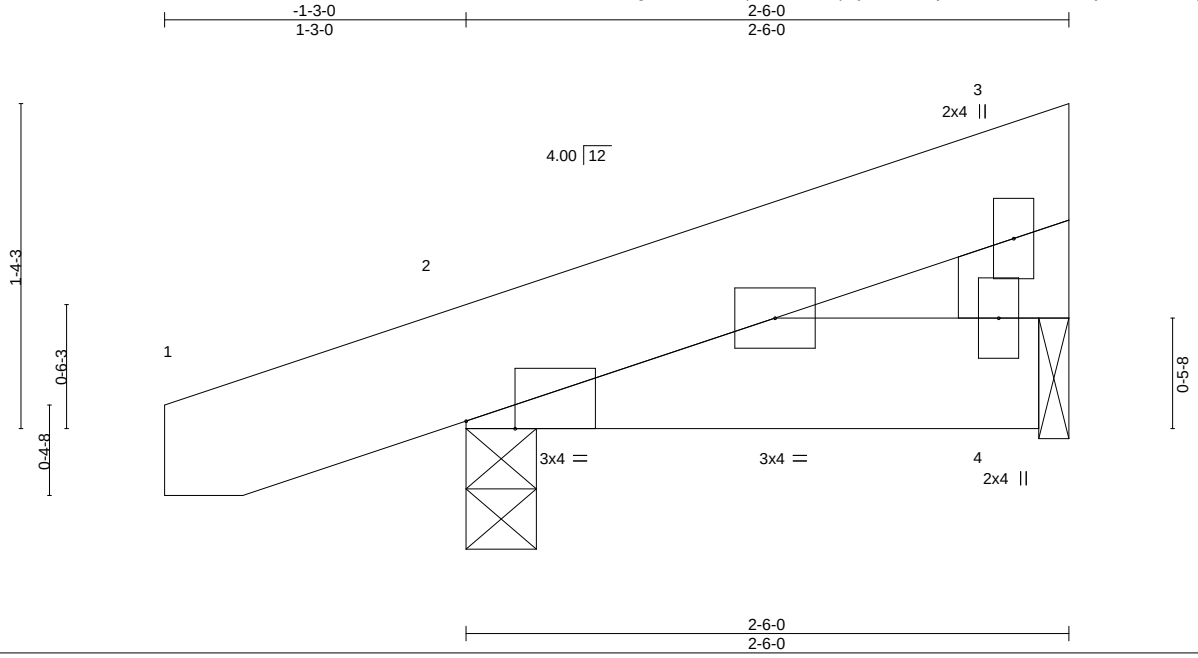

Plate Offsets (X,Y)-- [2:0-2-7,Edge]

LOADING (psf)		SPACING- 2-0-0		CSI.		DEFL. in (loc) l/defl L/d					PLATES	GRIP
TCLL	20.0	Plate Grip DOL	1.15	TC	0.03	Vert(LL)	-0.00	2	>999	360	MT20	244/190
TCDL	10.0	Lumber DOL	1.15	BC	0.01	Vert(CT)	-0.00	2	>999	240		
BCLL	0.0 *	Rep Stress Incr	YES	WB	0.00	Horz(CT)	0.00		n/a	n/a		
BCDL	10.0	Code IRC2015/TPI2014		Matrix-P		Wind(LL)	0.00	2	****	240	Weight: 16 lb	FT = 20%

LUMBER-
TOP CHORD 2x6 SP No.1
BOT CHORD 2x6 SP No.1
WEBS 2x6 SP No.1

BRACING-
TOP CHORD Structural wood sheathing directly applied or 2-6-0 oc purlins.
BOT CHORD Rigid ceiling directly applied or 10-0-0 oc bracing.

REACTIONS. (size) 2=0-3-8, 4=0-1-8
Max Horz 2=41(LC 8)
Max Uplift 2=-63(LC 8), 4=-8(LC 12)
Max Grav 2=181(LC 1), 4=64(LC 1)

FORCES. (lb) - Max. Comp./Max. Ten. - All forces 250 (lb) or less except when shown.

NOTES-
1) Wind: ASCE 7-10; Vult=130mph Vasd=103mph; TCDL=6.0psf; BCDL=6.0psf; h=15ft; Cat. II; Exp C; Enclosed; MWFRS (envelope) and C-C Exterior(2) zone;C-C for members and forces & MWFRS for reactions shown; Lumber DOL=1.60 plate grip DOL=1.60
2) This truss has been designed for a 10.0 psf bottom chord live load nonconcurrent with any other live loads.
3) * This truss has been designed for a live load of 30.0psf on the bottom chord in all areas where a rectangle 3-6-0 tall by 2-0-0 wide will fit between the bottom chord and any other members.
4) Bearing at joint(s) 4 considers parallel to grain value using ANSI/TPI 1 angle to grain formula. Building designer should verify capacity of bearing surface.
5) Provide mechanical connection (by others) of truss to bearing plate at joint(s) 4.
6) Provide mechanical connection (by others) of truss to bearing plate capable of withstanding 100 lb uplift at joint(s) 2, 4.

April 5,2023

ENGINEERING BY TRENCO A MiTek Affiliate
818 Soundside Road
Edenton, NC 27932

Job	Truss	Truss Type	Qty	Ply	Lot 97 South Creek
J0423-1503	PB-1	GABLE	2	1	I57566189 Job Reference (optional)

Comtech, Inc, Fayetteville, NC - 28314, 8.430 s Jan 6 2022 MiTek Industries, Inc. Tue Apr 4 10:42:58 2023 Page 1
ID:g1aKfXs3SSmp0NcU8a5MpuyxuRE-tTHD6?MtYUjNqNv5DI2ytYY0HgZx4zvV8UqNX5zU79x

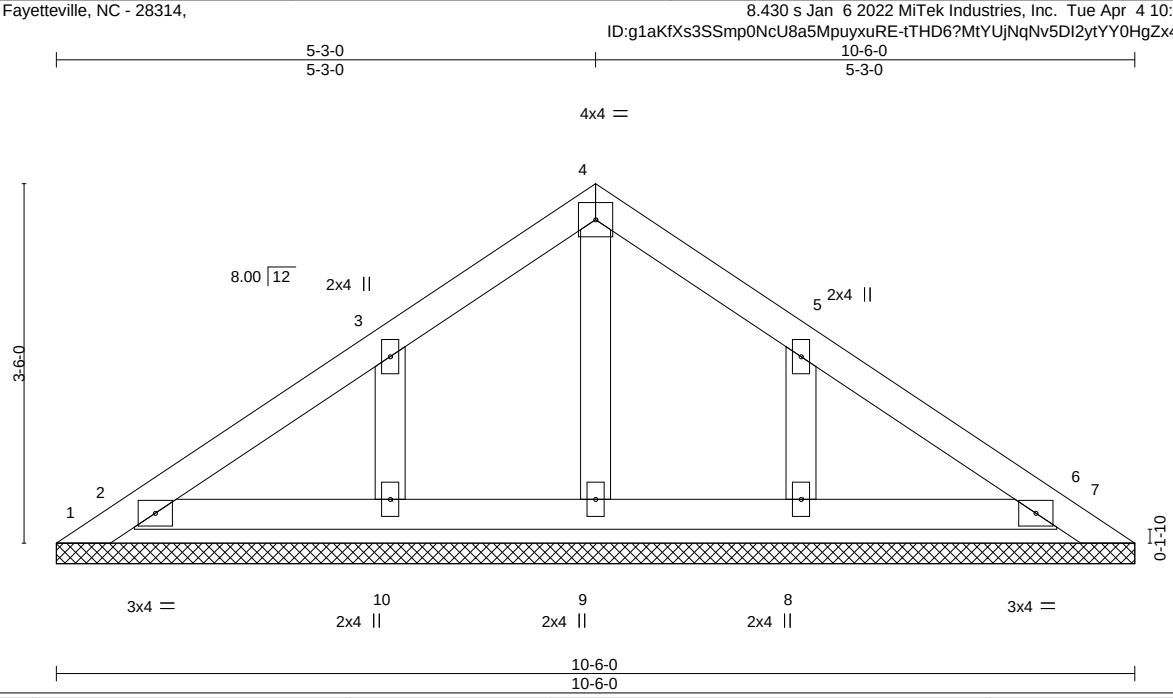

LOADING (psf)		SPACING- 2-0-0		CSI.		DEFL.	in	(loc)	l/defl	L/d	PLATES	GRIP
TCLL	20.0	Plate Grip DOL	1.15	TC	0.05	Vert(LL)	n/a	-	n/a	999	MT20	244/190
TCDL	10.0	Lumber DOL	1.15	BC	0.04	Vert(CT)	n/a	-	n/a	999		
BCLL	0.0 *	Rep Stress Incr	YES	WB	0.03	Horz(CT)	0.00	6	n/a	n/a		
BCDL	10.0	Code IRC2015/TPI2014		Matrix-P							Weight: 41 lb	FT = 20%

LUMBER-
TOP CHORD 2x4 SP No.1
BOT CHORD 2x4 SP No.1
OTHERS 2x4 SP No.2

BRACING-
TOP CHORD Structural wood sheathing directly applied or 6-0-0 oc purlins.
BOT CHORD Rigid ceiling directly applied or 10-0-0 oc bracing.

REACTIONS. All bearings 10-6-0.
(lb) - Max Horz 1=-100(LC 8)
Max Uplift All uplift 100 lb or less at joint(s) 1, 7, 2, 6 except 10=-109(LC 12), 8=-109(LC 13)
Max Grav All reactions 250 lb or less at joint(s) 1, 7, 2, 6, 9, 10, 8

FORCES. (lb) - Max. Comp./Max. Ten. - All forces 250 (lb) or less except when shown.

NOTES-
1) Unbalanced roof live loads have been considered for this design.
2) Wind: ASCE 7-10; Vult=130mph Vasd=103mph; TCDL=6.0psf; BCDL=6.0psf; h=15ft; Cat. II; Exp C; Enclosed; MWFRS (envelope) gable end zone and C-C Exterior(2) zone;C-C for members and forces & MWFRS for reactions shown; Lumber DOL=1.60 plate grip DOL=1.60
3) Truss designed for wind loads in the plane of the truss only. For studs exposed to wind (normal to the face), see Standard Industry Gable End Details as applicable, or consult qualified building designer as per ANSI/TPI 1.
4) Gable requires continuous bottom chord bearing.
5) Gable studs spaced at 2-0-0 oc.
6) This truss has been designed for a 10.0 psf bottom chord live load nonconcurrent with any other live loads.
7) * This truss has been designed for a live load of 30.0psf on the bottom chord in all areas where a rectangle 3-6-0 tall by 2-0-0 wide will fit between the bottom chord and any other members.
8) Provide mechanical connection (by others) of truss to bearing plate capable of withstanding 100 lb uplift at joint(s) 1, 7, 2, 6 except (jt=lb) 10=109, 8=109.
9) See Standard Industry Piggyback Truss Connection Detail for Connection to base truss as applicable, or consult qualified building designer.

April 5,2023

ENGINEERING BY TRENCO A MiTek Affiliate
818 Soundside Road
Edenton, NC 27932

Job	Truss	Truss Type	Qty	Ply	Lot 97 South Creek
J0423-1503	PB-2	PIGGYBACK	19	1	I57566190 Job Reference (optional)

Comtech, Inc, Fayetteville, NC - 28314, 8.430 s Jan 6 2022 MiTek Industries, Inc. Tue Apr 4 10:42:59 2023 Page 1

ID:g1aKfXs3SSmp0NcU8a5MpuyxuRE-LgrbJLNVJorERWUHm?ZBQl47K3sPpQxfN8Zx3XzU79w

5-3-0 | 10-6-0
5-3-0 | 5-3-0

Scale = 1:22.2

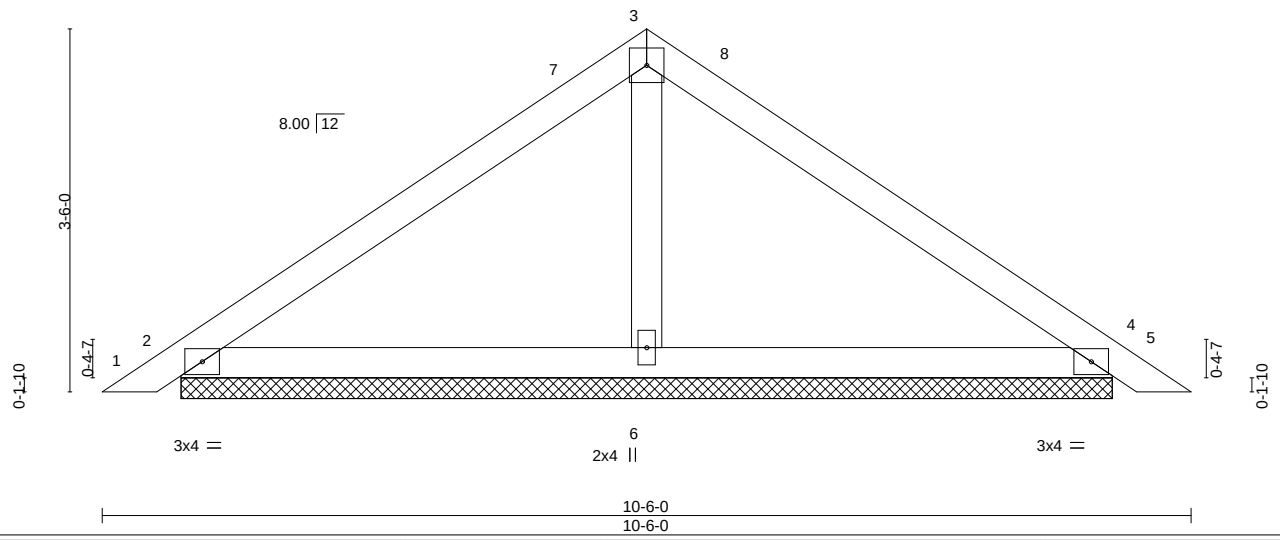

LOADING (psf)			SPACING- 2-0-0		CSI.		DEFL. in (loc) l/defl L/d					PLATES	GRIP
TCLL	20.0		Plate Grip DOL	1.15	TC	0.28	Vert(LL)	0.01	5	n/r	120	MT20	244/190
TCDL	10.0		Lumber DOL	1.15	BC	0.15	Vert(CT)	0.02	5	n/r	120		
BCLL	0.0	*	Rep Stress Incr	YES	WB	0.04	Horz(CT)	0.00	4	n/a	n/a		
BCDL	10.0		Code IRC2015/TPI2014		Matrix-P							Weight: 36 lb	FT = 20%

LUMBER-
TOP CHORD 2x4 SP No.1
BOT CHORD 2x4 SP No.1
OTHERS 2x4 SP No.2

BRACING-
TOP CHORD Structural wood sheathing directly applied or 6-0-0 oc purlins.
BOT CHORD Rigid ceiling directly applied or 10-0-0 oc bracing.

REACTIONS. (size) 2=8-11-12, 4=8-11-12, 6=8-11-12
Max Horz 2=-80(LC 10)
Max Uplift 2=-39(LC 12), 4=-47(LC 13)
Max Grav 2=227(LC 1), 4=227(LC 1), 6=324(LC 1)

FORCES. (lb) - Max. Comp./Max. Ten. - All forces 250 (lb) or less except when shown.

NOTES-
1) Unbalanced roof live loads have been considered for this design.
2) Wind: ASCE 7-10; Vult=130mph Vasd=103mph; TCDL=6.0psf; BCDL=6.0psf; h=15ft; Cat. II; Exp C; Enclosed; MWFRS (envelope) and C-C Exterior(2) 0-3-2 to 4-7-15, Interior(1) 4-7-15 to 5-3-0, Exterior(2) 5-3-0 to 9-8-14, Interior(1) 9-8-14 to 10-2-14 zone;C-C for members and forces & MWFRS for reactions shown; Lumber DOL=1.60 plate grip DOL=1.60
3) Gable requires continuous bottom chord bearing.
4) This truss has been designed for a 10.0 psf bottom chord live load nonconcurrent with any other live loads.
5) * This truss has been designed for a live load of 30.0psf on the bottom chord in all areas where a rectangle 3-6-0 tall by 2-0-0 wide will fit between the bottom chord and any other members.
6) Provide mechanical connection (by others) of truss to bearing plate capable of withstanding 100 lb uplift at joint(s) 2, 4.
7) See Standard Industry Piggyback Truss Connection Detail for Connection to base truss as applicable, or consult qualified building designer.

April 5,2023

ENGINEERING BY TRENCO A MiTek Affiliate
818 Soundside Road
Edenton, NC 27932

Job	Truss	Truss Type	Qty	Ply	Lot 97 South Creek
J0423-1503	PB-3	PIGGYBACK	2	1	I57566191 Job Reference (optional)

Comtech, Inc, Fayetteville, NC - 28314, 8.430 s Jan 6 2022 MiTek Industries, Inc. Tue Apr 4 10:43:01 2023 Page 1

ID:g1aKfXs3SSmp0NcU8a5MpuyxuRE-H2yMk0OmqP5xhqeguQbfVAAWXtXHHKOxqS228QzU79u

5-3-0 | 10-6-0
5-3-0 | 5-3-0

Scale = 1:22.6

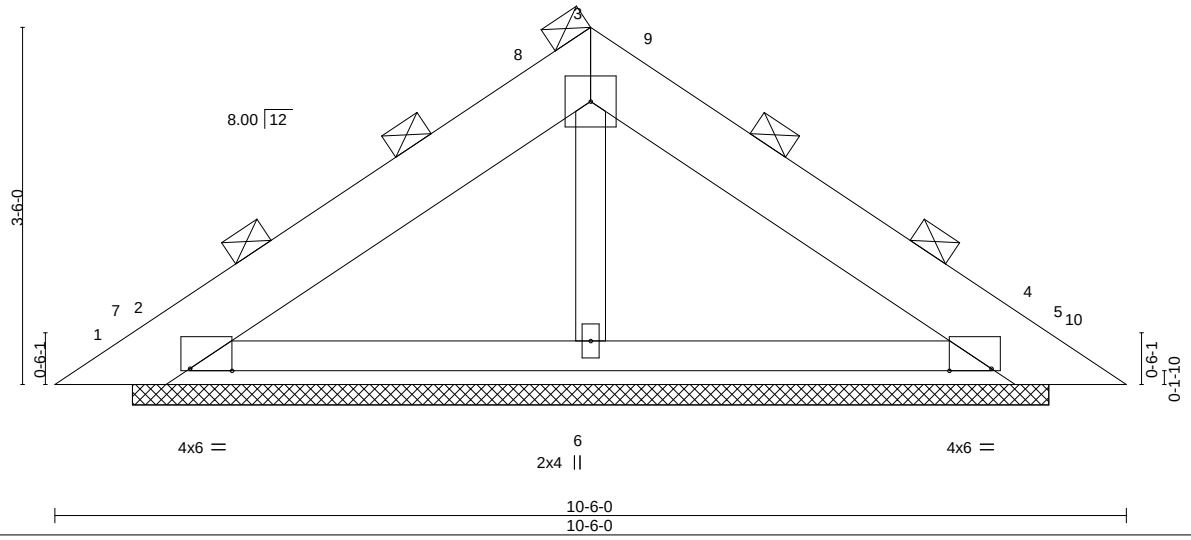

Plate Offsets (X,Y)-- [2:0-4-15,Edge], [4:0-4-15,Edge]

LOADING (psf)		SPACING- 4-0-0		CSI.		DEFL. in (loc) l/defl L/d					PLATES	GRIP
TCLL	20.0	Plate Grip DOL	1.15	TC	0.11	Vert(LL)	n/a	-	n/a	999	MT20	244/190
TCDL	10.0	Lumber DOL	1.15	BC	0.25	Vert(CT)	n/a	-	n/a	999		
BCLL	0.0 *	Rep Stress Incr	NO	WB	0.04	Horz(CT)	0.00	4	n/a	n/a		
BCDL	10.0	Code IRC2015/TPI2014		Matrix-P							Weight: 54 lb	FT = 20%

LUMBER-
TOP CHORD 2x8 SP No.1
BOT CHORD 2x4 SP No.1
OTHERS 2x4 SP No.2

BRACING-
TOP CHORD 2-0-0 oc purlins (6-0-0 max.)
(Switched from sheeted: Spacing > 2-8-0).
BOT CHORD Rigid ceiling directly applied or 10-0-0 oc bracing.

REACTIONS. All bearings 8-11-12.
(lb) - Max Horz 1=-150(LC 8)
Max Uplift All uplift 100 lb or less at joint(s) except 1=-267(LC 19), 5=-224(LC 20), 2=-276(LC 12), 4=-267(LC 13)
Max Grav All reactions 250 lb or less at joint(s) 1, 5 except 2=764(LC 19), 4=750(LC 20), 6=480(LC 3)

FORCES. (lb) - Max. Comp./Max. Ten. - All forces 250 (lb) or less except when shown.
TOP CHORD 2-3=-271/165, 3-4=-257/164
WEBS 3-6=-263/47

NOTES-
1) Unbalanced roof live loads have been considered for this design.
2) Wind: ASCE 7-10; Vult=130mph Vasd=103mph; TCDL=6.0psf; BCDL=6.0psf; h=15ft; Cat. II; Exp C; Enclosed; MWFRS (envelope) and C-C Exterior(2) 0-6-9 to 4-11-5, Interior(1) 4-11-5 to 5-3-0, Exterior(2) 5-3-0 to 9-7-13, Interior(1) 9-7-13 to 9-11-7 zone;C-C for members and forces & MWFRS for reactions shown; Lumber DOL=1.60 plate grip DOL=1.60
3) Gable requires continuous bottom chord bearing.
4) This truss has been designed for a 10.0 psf bottom chord live load nonconcurrent with any other live loads.
5) * This truss has been designed for a live load of 30.0psf on the bottom chord in all areas where a rectangle 3-6-0 tall by 2-0-0 wide will fit between the bottom chord and any other members.
6) Provide mechanical connection (by others) of truss to bearing plate capable of withstanding 267 lb uplift at joint 1, 224 lb uplift at joint 5, 276 lb uplift at joint 2 and 267 lb uplift at joint 4.
7) See Standard Industry Piggyback Truss Connection Detail for Connection to base truss as applicable, or consult qualified building designer.
8) Graphical purlin representation does not depict the size or the orientation of the purlin along the top and/or bottom chord.

NORTH CAROLINA PROFESSIONAL SEAL 036322 ENGINEER ERIC A. GILBERT

April 5,2023

ENGINEERING BY TRENCO A MiTek Affiliate
818 Soundside Road
Edenton, NC 27932

Job	Truss	Truss Type	Qty	Ply	Lot 97 South Creek
J0423-1503	VB-6	Valley	1	1	I57566192 Job Reference (optional)

Comtech, Inc, Fayetteville, NC - 28314, 8.430 s Jan 6 2022 MiTek Industries, Inc. Tue Apr 4 10:43:02 2023 Page 1

ID:g1aKfXs3SSmp0NcU8a5MpuyxuRE-lEWkxMPObjDoI_DsS86u2Oif0HuA0nZ536obgszU79t

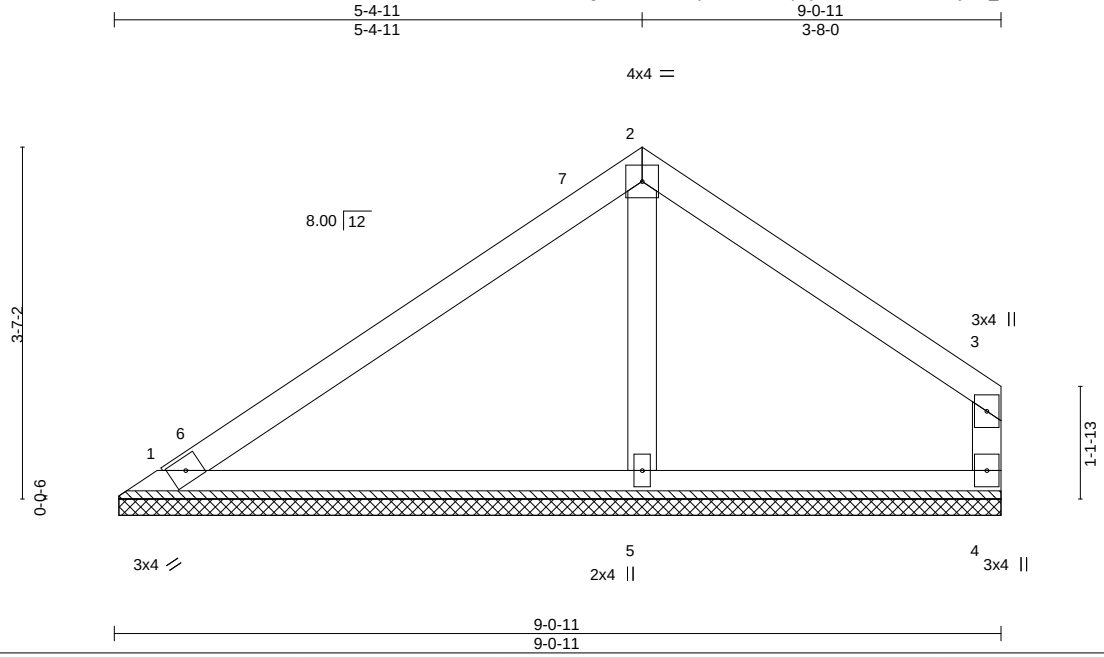

LOADING (psf)			SPACING- 2-0-0		CSI.		DEFL.	in	(loc)	l/defl	L/d	PLATES	GRIP
TCLL	20.0		Plate Grip DOL	1.15	TC	0.26	Vert(LL)	n/a	-	n/a	999	MT20	244/190
TCDL	10.0		Lumber DOL	1.15	BC	0.14	Vert(CT)	n/a	-	n/a	999		
BCLL	0.0	*	Rep Stress Incr	YES	WB	0.05	Horz(CT)	0.00	4	n/a	n/a		
BCDL	10.0		Code IRC2015/TPI2014		Matrix-S							Weight: 34 lb	FT = 20%

LUMBER-

TOP CHORD	2x4 SP No.1
BOT CHORD	2x4 SP No.1
WEBS	2x4 SP No.2
OTHERS	2x4 SP No.2

BRACING-

TOP CHORD	Structural wood sheathing directly applied or 6-0-0 oc purlins, except end verticals.
BOT CHORD	Rigid ceiling directly applied or 10-0-0 oc bracing.

REACTIONS. (size) 1=9-0-2, 4=9-0-2, 5=9-0-2
Max Horz 1=77(LC 9)
Max Uplift 1=-28(LC 13), 4=-51(LC 13), 5=-8(LC 12)
Max Grav 1=192(LC 1), 4=155(LC 20), 5=366(LC 19)

FORCES. (lb) - Max. Comp./Max. Ten. - All forces 250 (lb) or less except when shown.

NOTES-

1) Unbalanced roof live loads have been considered for this design.
2) Wind: ASCE 7-10; Vult=130mph Vasd=103mph; TCDL=6.0psf; BCDL=6.0psf; h=15ft; Cat. II; Exp C; Enclosed; MWFRS (envelope) and C-C Exterior(2) 0-5-15 to 4-10-12, Interior(1) 4-10-12 to 5-4-11, Exterior(2) 5-4-11 to 8-10-15 zone;C-C for members and forces & MWFRS for reactions shown; Lumber DOL=1.60 plate grip DOL=1.60
3) Gable requires continuous bottom chord bearing.
4) This truss has been designed for a 10.0 psf bottom chord live load nonconcurrent with any other live loads.
5) * This truss has been designed for a live load of 30.0psf on the bottom chord in all areas where a rectangle 3-6-0 tall by 2-0-0 wide will fit between the bottom chord and any other members.
6) Provide mechanical connection (by others) of truss to bearing plate capable of withstanding 28 lb uplift at joint 1, 51 lb uplift at joint 4 and 8 lb uplift at joint 5.

NORTH CAROLINA PROFESSIONAL SEAL 036322 ENGINEER ERIC A. GILBERT

April 5,2023

ENGINEERING BY TRENCO A MiTek Affiliate
818 Soundside Road
Edenton, NC 27932

Job	Truss	Truss Type	Qty	Ply	Lot 97 South Creek
J0423-1503	VB-7	Valley	1	1	I57566193 Job Reference (optional)

Comtech, Inc, Fayetteville, NC - 28314, 8.430 s Jan 6 2022 MiTek Industries, Inc. Tue Apr 4 10:43:03 2023 Page 1
ID:g1aKfXs3SSmp0NcU8a5MpuyxuRE-DR469iQ0M1Lfw8o2?rd7abFs?hGhlEGEImX8CIzU79s

3-4-11 | 6-9-7
3-4-11 | 3-4-11

4x4 =

Scale: 3/4"=1'

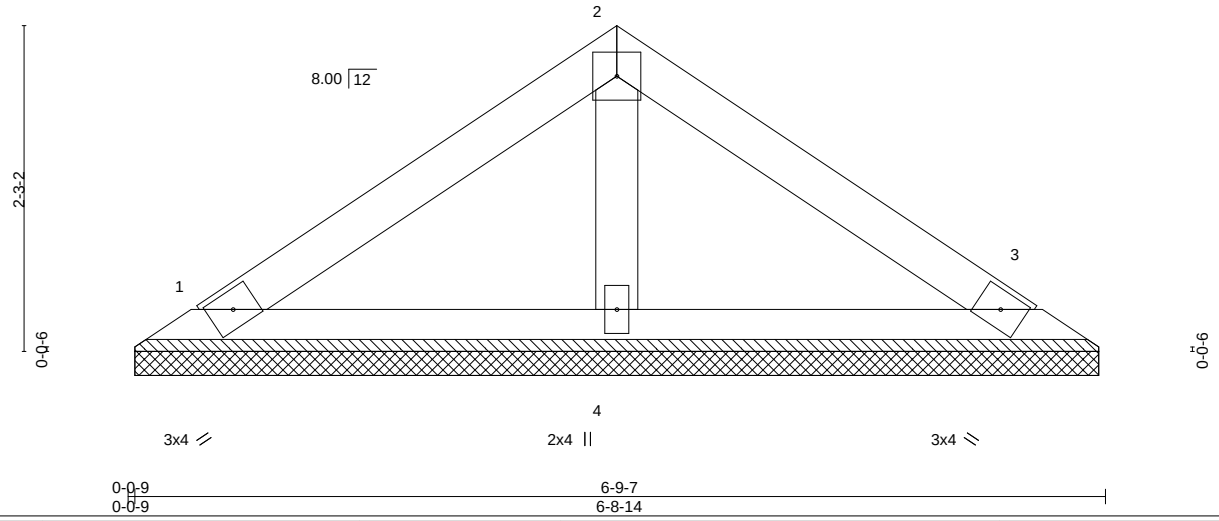

LOADING (psf)		SPACING- 2-0-0		CSI.		DEFL. in (loc) l/defl L/d		PLATES GRIP
TCLL	20.0	Plate Grip DOL	1.15	TC	0.11	Vert(LL) n/a - n/a 999		MT20 244/190
TCDL	10.0	Lumber DOL	1.15	BC	0.06	Vert(CT) n/a - n/a 999		
BCLL	0.0 *	Rep Stress Incr	YES	WB	0.02	Horz(CT) 0.00 3 n/a n/a		
BCDL	10.0	Code IRC2015/TPI2014		Matrix-P				Weight: 23 lb FT = 20%

LUMBER-
TOP CHORD 2x4 SP No.1
BOT CHORD 2x4 SP No.1
OTHERS 2x4 SP No.2

BRACING-
TOP CHORD Structural wood sheathing directly applied or 6-0-0 oc purlins.
BOT CHORD Rigid ceiling directly applied or 10-0-0 oc bracing.

REACTIONS. (size) 1=6-8-5, 3=6-8-5, 4=6-8-5
Max Horz 1=47(LC 11)
Max Uplift 1=-20(LC 12), 3=-24(LC 13)
Max Grav 1=126(LC 1), 3=126(LC 1), 4=212(LC 1)

FORCES. (lb) - Max. Comp./Max. Ten. - All forces 250 (lb) or less except when shown.

NOTES-
1) Unbalanced roof live loads have been considered for this design.
2) Wind: ASCE 7-10; Vult=130mph Vasd=103mph; TCDL=6.0psf; BCDL=6.0psf; h=15ft; Cat. II; Exp C; Enclosed; MWFRS (envelope) and C-C Exterior(2) zone;C-C for members and forces & MWFRS for reactions shown; Lumber DOL=1.60 plate grip DOL=1.60
3) Gable requires continuous bottom chord bearing.
4) This truss has been designed for a 10.0 psf bottom chord live load nonconcurrent with any other live loads.
5) * This truss has been designed for a live load of 30.0psf on the bottom chord in all areas where a rectangle 3-6-0 tall by 2-0-0 wide will fit between the bottom chord and any other members.
6) Provide mechanical connection (by others) of truss to bearing plate capable of withstanding 20 lb uplift at joint 1 and 24 lb uplift at joint 3.

April 5,2023

ENGINEERING BY TRENCO A MiTek Affiliate
818 Soundside Road
Edenton, NC 27932

Job	Truss	Truss Type	Qty	Ply	Lot 97 South Creek
J0423-1503	VD-1	Valley	1	1	I57566194 Job Reference (optional)

Comtech, Inc, Fayetteville, NC - 28314, 8.430 s Jan 6 2022 MiTek Industries, Inc. Tue Apr 4 10:43:04 2023 Page 1

ID:g1aKfXs3SSmp0NcU8a5MpuyxuRE-hdeUM2Qe7KTWYINEZY9M7po0R4bWUgBOWQHikkzU79r

5-7-11 | 11-3-7
5-7-11 | 5-7-11

Scale: 1/2"=1'

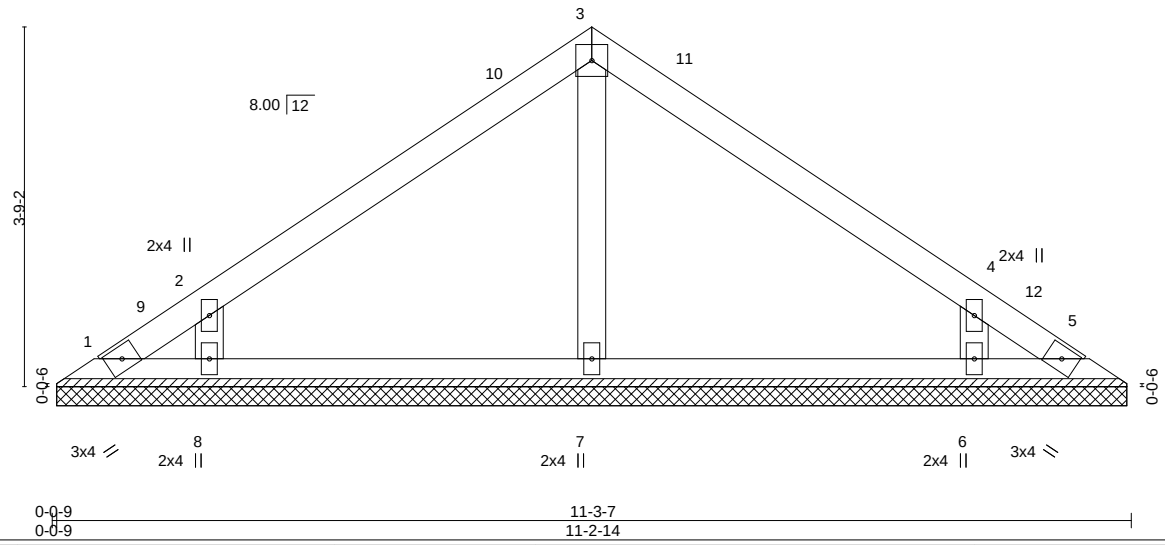

LOADING (psf)			SPACING- 2-0-0		CSI.		DEFL.	in	(loc)	l/defl	L/d	PLATES	GRIP
TCLL	20.0		Plate Grip DOL	1.15	TC	0.13	Vert(LL)	n/a	-	n/a	999	MT20	244/190
TCDL	10.0		Lumber DOL	1.15	BC	0.09	Vert(CT)	n/a	-	n/a	999		
BCLL	0.0	*	Rep Stress Incr	YES	WB	0.04	Horz(CT)	0.00	5	n/a	n/a		
BCDL	10.0		Code IRC2015/TPI2014		Matrix-S							Weight: 41 lb	FT = 20%

LUMBER-
TOP CHORD 2x4 SP No.1
BOT CHORD 2x4 SP No.1
OTHERS 2x4 SP No.2

BRACING-
TOP CHORD Structural wood sheathing directly applied or 6-0-0 oc purlins.
BOT CHORD Rigid ceiling directly applied or 10-0-0 oc bracing.

REACTIONS. All bearings 11-2-5.
(lb) - Max Horz 1=82(LC 9)
Max Uplift All uplift 100 lb or less at joint(s) 1, 5, 8, 6
Max Grav All reactions 250 lb or less at joint(s) 1, 5 except 7=262(LC 1), 8=325(LC 19), 6=324(LC 20)

FORCES. (lb) - Max. Comp./Max. Ten. - All forces 250 (lb) or less except when shown.
WEBS 2-8=-295/220, 4-6=-295/220

NOTES-
1) Unbalanced roof live loads have been considered for this design.
2) Wind: ASCE 7-10; Vult=130mph Vasd=103mph; TCDL=6.0psf; BCDL=6.0psf; h=15ft; Cat. II; Exp C; Enclosed; MWFRS (envelope) and C-C Exterior(2) 0-5-15 to 4-10-12, Interior(1) 4-10-12 to 5-7-11, Exterior(2) 5-7-11 to 10-0-8, Interior(1) 10-0-8 to 10-9-8 zone;C-C for members and forces & MWFRS for reactions shown; Lumber DOL=1.60 plate grip DOL=1.60
3) Gable requires continuous bottom chord bearing.
4) This truss has been designed for a 10.0 psf bottom chord live load nonconcurrent with any other live loads.
5) * This truss has been designed for a live load of 30.0psf on the bottom chord in all areas where a rectangle 3-6-0 tall by 2-0-0 wide will fit between the bottom chord and any other members.
6) Provide mechanical connection (by others) of truss to bearing plate capable of withstanding 100 lb uplift at joint(s) 1, 5, 8, 6.

NORTH CAROLINA PROFESSIONAL SEAL 036322 ENGINEER ERIC A. GILBERT

April 5,2023

ENGINEERING BY TRENCO A MiTek Affiliate
818 Soundside Road
Edenton, NC 27932

Job	Truss	Truss Type	Qty	Ply	Lot 97 South Creek
J0423-1503	VD-2	Valley	1	1	I57566195 Job Reference (optional)

Comtech, Inc, Fayetteville, NC - 28314, 8.430 s Jan 6 2022 MiTek Industries, Inc. Tue Apr 4 10:43:05 2023 Page 1

ID:g1aKfXs3SSmp0NcU8a5MpuyxuRE-9pCtaORGuecN9SyR7Ggbg0KB9Uw_D7iXl41FHBzU79q

3-7-11 | 7-3-7
3-7-11 | 3-7-11

Scale = 1:16.8

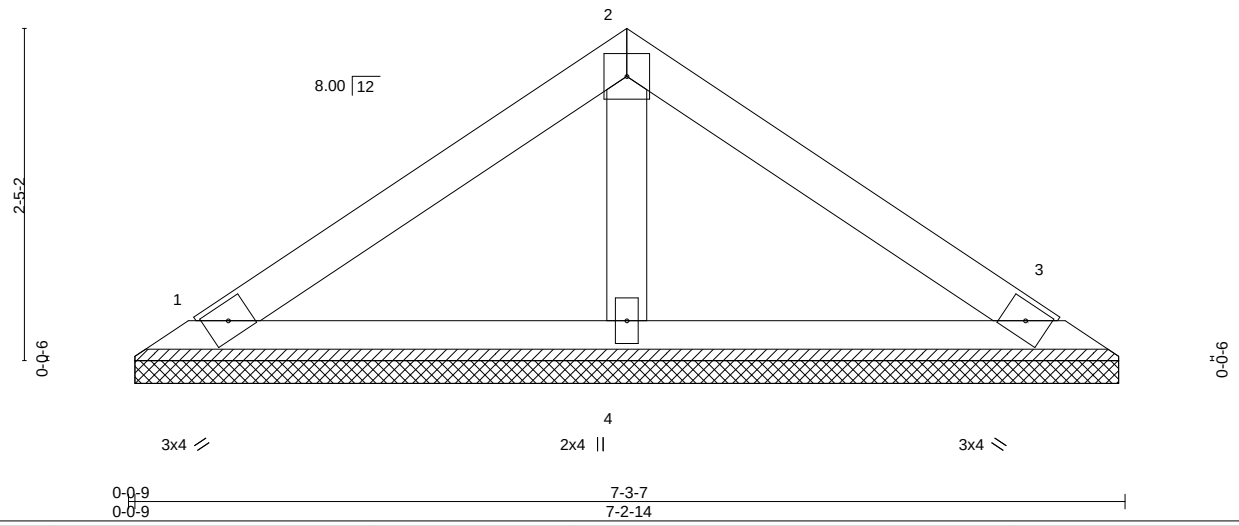

LOADING (psf)		SPACING- 2-0-0		CSI.		DEFL. in (loc) l/defl L/d		PLATES GRIP
TCLL	20.0	Plate Grip DOL	1.15	TC	0.13	Vert(LL) n/a - n/a 999		MT20 244/190
TCDL	10.0	Lumber DOL	1.15	BC	0.07	Vert(CT) n/a - n/a 999		
BCLL	0.0 *	Rep Stress Incr	YES	WB	0.02	Horz(CT) 0.00 3 n/a n/a		
BCDL	10.0	Code IRC2015/TPI2014		Matrix-P				Weight: 25 lb FT = 20%

LUMBER-
TOP CHORD 2x4 SP No.1
BOT CHORD 2x4 SP No.1
OTHERS 2x4 SP No.2

BRACING-
TOP CHORD Structural wood sheathing directly applied or 6-0-0 oc purlins.
BOT CHORD Rigid ceiling directly applied or 10-0-0 oc bracing.

REACTIONS. (size) 1=7-2-5, 3=7-2-5, 4=7-2-5
Max Horz 1=51(LC 9)
Max Uplift 1=-22(LC 12), 3=-27(LC 13)
Max Grav 1=137(LC 1), 3=137(LC 1), 4=230(LC 1)

FORCES. (lb) - Max. Comp./Max. Ten. - All forces 250 (lb) or less except when shown.

NOTES-
1) Unbalanced roof live loads have been considered for this design.
2) Wind: ASCE 7-10; Vult=130mph Vasd=103mph; TCDL=6.0psf; BCDL=6.0psf; h=15ft; Cat. II; Exp C; Enclosed; MWFRS (envelope) and C-C Exterior(2) zone;C-C for members and forces & MWFRS for reactions shown; Lumber DOL=1.60 plate grip DOL=1.60
3) Gable requires continuous bottom chord bearing.
4) This truss has been designed for a 10.0 psf bottom chord live load nonconcurrent with any other live loads.
5) * This truss has been designed for a live load of 30.0psf on the bottom chord in all areas where a rectangle 3-6-0 tall by 2-0-0 wide will fit between the bottom chord and any other members.
6) Provide mechanical connection (by others) of truss to bearing plate capable of withstanding 100 lb uplift at joint(s) 1, 3.

NORTH CAROLINA PROFESSIONAL SEAL 036322 ENGINEER ERIC A. GILBERT

April 5,2023

ENGINEERING BY TRENCO A MiTek Affiliate
818 Soundside Road
Edenton, NC 27932

Job	Truss	Truss Type	Qty	Ply	Lot 97 South Creek
J0423-1503	VD-3	Valley	1	1	I57566196 Job Reference (optional)

Comtech, Inc, Fayetteville, NC - 28314, 8.430 s Jan 6 2022 MiTek Industries, Inc. Tue Apr 4 10:43:06 2023 Page 1

ID:g1aKfXs3SSmp0NcU8a5MpuyxuRE-e0mFnkSufykEnbWdhzBqCEtOmuHgyaGg_kmopdzU79p

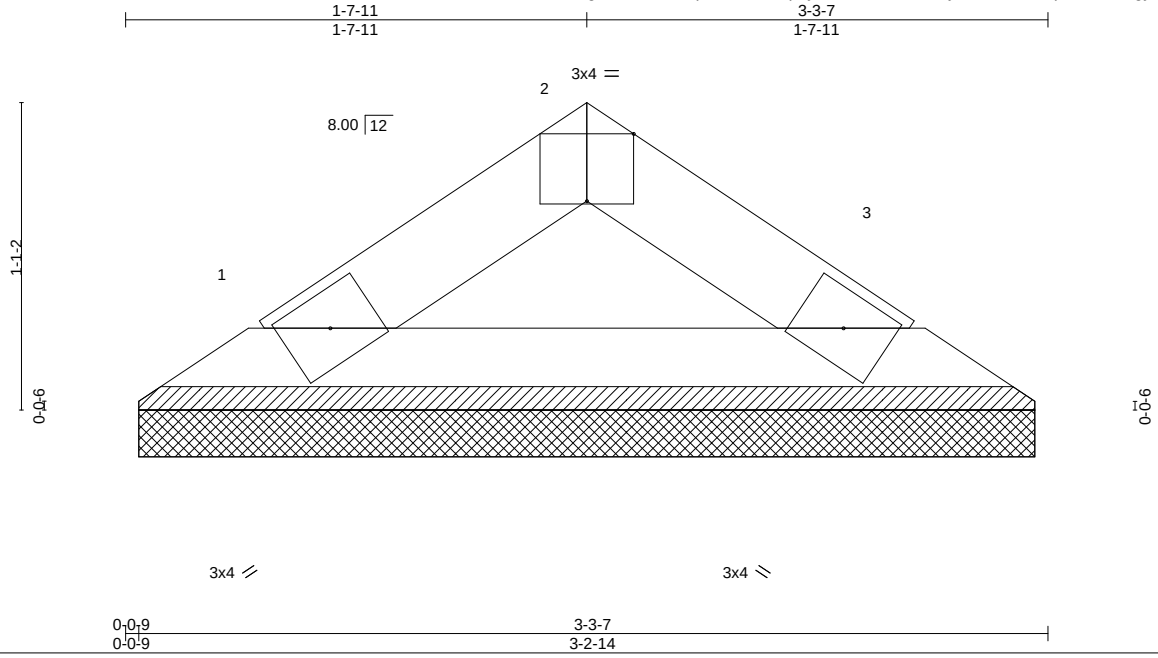

Plate Offsets (X,Y)-- [2:0-2-0,Edge]

LOADING (psf)		SPACING- 2-0-0		CSI.		DEFL. in (loc) l/defl L/d		PLATES	GRIP
TCLL	20.0	Plate Grip DOL	1.15	TC	0.02	Vert(LL) n/a - n/a 999		MT20	244/190
TCDL	10.0	Lumber DOL	1.15	BC	0.04	Vert(CT) n/a - n/a 999			
BCLL	0.0 *	Rep Stress Incr	YES	WB	0.00	Horz(CT) 0.00 3 n/a n/a			
BCDL	10.0	Code IRC2015/TPI2014		Matrix-P				Weight: 9 lb	FT = 20%

LUMBER-
TOP CHORD 2x4 SP No.1
BOT CHORD 2x4 SP No.1

BRACING-
TOP CHORD Structural wood sheathing directly applied or 3-3-7 oc purlins.
BOT CHORD Rigid ceiling directly applied or 10-0-0 oc bracing.

REACTIONS. (size) 1=3-2-5, 3=3-2-5
Max Horz 1=-19(LC 8)
Max Uplift 1=-5(LC 12), 3=-5(LC 13)
Max Grav 1=92(LC 1), 3=92(LC 1)

FORCES. (lb) - Max. Comp./Max. Ten. - All forces 250 (lb) or less except when shown.

NOTES-
1) Unbalanced roof live loads have been considered for this design.
2) Wind: ASCE 7-10; Vult=130mph Vasd=103mph; TCDL=6.0psf; BCDL=6.0psf; h=15ft; Cat. II; Exp C; Enclosed; MWFRS (envelope) and C-C Exterior(2) zone;C-C for members and forces & MWFRS for reactions shown; Lumber DOL=1.60 plate grip DOL=1.60
3) Gable requires continuous bottom chord bearing.
4) This truss has been designed for a 10.0 psf bottom chord live load nonconcurrent with any other live loads.
5) * This truss has been designed for a live load of 30.0psf on the bottom chord in all areas where a rectangle 3-6-0 tall by 2-0-0 wide will fit between the bottom chord and any other members.
6) Provide mechanical connection (by others) of truss to bearing plate capable of withstanding 100 lb uplift at joint(s) 1, 3.

April 5,2023

ENGINEERING BY TRENCO A MiTek Affiliate
818 Soundside Road
Edenton, NC 27932

Symbols

PLATE LOCATION AND ORIENTATION

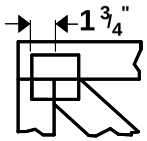

Center plate on joint unless x, y offsets are indicated. Dimensions are in ft-in-sixteenths. Apply plates to both sides of truss and fully embed teeth.

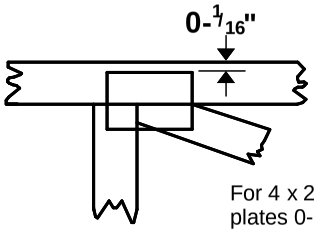

For 4 x 2 orientation, locate plates 0- 1/16" from outside edge of truss.

This symbol indicates the required direction of slots in connector plates.

*** Plate location details available in MiTek 20/20 software or upon request.**

PLATE SIZE

4 x 4

The first dimension is the plate width measured perpendicular to slots. Second dimension is the length parallel to slots.

LATERAL BRACING LOCATION

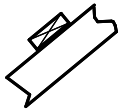

Indicated by symbol shown and/or by text in the bracing section of the output. Use T or I bracing if indicated.

BEARING

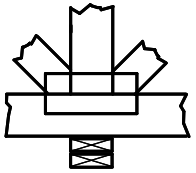

Indicates location where bearings (supports) occur. Icons vary but reaction section indicates joint number where bearings occur. Min size shown is for crushing only.

Industry Standards:

ANSI/TPI1: National Design Specification for Metal Plate Connected Wood Truss Construction.
DSB-89: Design Standard for Bracing.
BCSI: Building Component Safety Information, Guide to Good Practice for Handling, Installing & Bracing of Metal Plate Connected Wood Trusses.

Numbering System

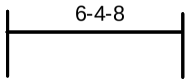

dimensions shown in ft-in-sixteenths
(Drawings not to scale)

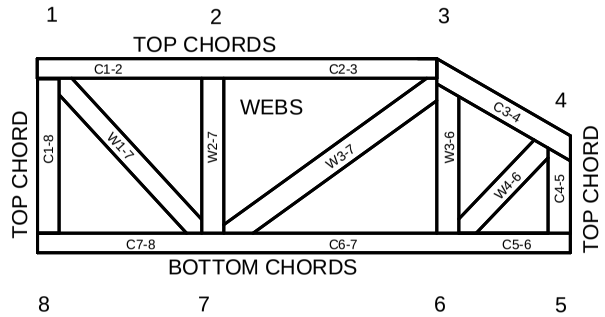

JOINTS ARE GENERALLY NUMBERED/LETTERED CLOCKWISE AROUND THE TRUSS STARTING AT THE JOINT FARTHEST TO THE LEFT.

CHORDS AND WEBS ARE IDENTIFIED BY END JOINT NUMBERS/LETTERS.

PRODUCT CODE APPROVALS

ICC-ES Reports:

ESR-1311, ESR-1352, ESR1988
ER-3907, ESR-2362, ESR-1397, ESR-3282

Trusses are designed for wind loads in the plane of the truss unless otherwise shown.

Lumber design values are in accordance with ANSI/TPI 1 section 6.3 These truss designs rely on lumber values established by others.

MiTek

ENGINEERING BY TRENCO
A MiTek Affiliate

General Safety Notes

Failure to Follow Could Cause Property Damage or Personal Injury

1. Additional stability bracing for truss system, e.g. diagonal or X-bracing, is always required. See BCSI.
2. Truss bracing must be designed by an engineer. For wide truss spacing, individual lateral braces themselves may require bracing, or alternative Tor I bracing should be considered.
3. Never exceed the design loading shown and never stack materials on inadequately braced trusses.
4. Provide copies of this truss design to the building designer, erection supervisor, property owner and all other interested parties.
5. Cut members to bear tightly against each other.
6. Place plates on each face of truss at each joint and embed fully. Knots and wane at joint locations are regulated by ANSI/TPI 1.
7. Design assumes trusses will be suitably protected from the environment in accord with ANSI/TPI 1.
8. Unless otherwise noted, moisture content of lumber shall not exceed 19% at time of fabrication.
9. Unless expressly noted, this design is not applicable for use with fire retardant, preservative treated, or green lumber.
10. Camber is a non-structural consideration and is the responsibility of truss fabricator. General practice is to camber for dead load deflection.
11. Plate type, size, orientation and location dimensions indicated are minimum plating requirements.
12. Lumber used shall be of the species and size, and in all respects, equal to or better than that specified.
13. Top chords must be sheathed or purlins provided at spacing indicated on design.
14. Bottom chords require lateral bracing at 10 ft. spacing, or less, if no ceiling is installed, unless otherwise noted.
15. Connections not shown are the responsibility of others.
16. Do not cut or alter truss member or plate without prior approval of an engineer.
17. Install and load vertically unless indicated otherwise.
18. Use of green or treated lumber may pose unacceptable environmental, health or performance risks. Consult with project engineer before use.
19. Review all portions of this design (front, back, words and pictures) before use. Reviewing pictures alone is not sufficient.
20. Design assumes manufacture in accordance with ANSI/TPI 1 Quality Criteria.
21. The design does not take into account any dynamic or other loads other than those expressly stated.