Kempsville Sanford Component Plant
298 Harvey Faulk Rd
Sanford, NC 27332

Phone #:919-775-1450

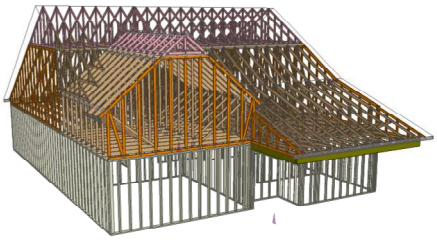

Builder: DRB HOMES NC

Model: 89 FaNC - COOPER 7

THE PLACEMENT PLAN NOTES:

1. The Placement Plan is a diagram for truss installation. It is not an engineered drawing and has not been reviewed by an engineer. The Owner/Building Designer is responsible for obtaining an engineer's review if one is required by the local jurisdiction.
2. The responsibilities of the Owner, Contractor, Building Designer, Component Designer and Component Manufacturer shall be as set forth in ANSI/TPI 1. Capitalized terms shall be as defined in ANSI/TP 1 unless otherwise indicated.
3. Each Component is designed as an individual component utilizing information provided by others. The Owner/Building Designer is responsible for reviewing all Component Submittal Packages and individual Component Design Drawings for compliance with the Construction Documents and compatibility with the overall Building design.
4. Contractor will not proceed with component installation until the Owner/Building Designer has reviewed the Component Submittal Package. Questions on the suitability of any Component will be resolved by the Building Designer.
5. The Building Designer and Contractor are responsible for all temporary and permanent bracing.
6. The Placement Plan assumes the building is dimensionally correct, structurally sound, and in a suitable condition to support each Component during installation and thereafter, including but not limited to installation of all bearing points. Proper design and construction of all structural components, including foundations, headers, beams, walls and columns are the responsibility of the Owner, Building Designer and Contractor.
7. Do not cut, drill, or modify any Component without first consulting the Component Manufacturer or Building Designer. Damaged Components shall not be installed unless directed by the Building Designer or approved by the Component Manufacturer.
8. Components must be handled and installed following all applicable safety standards and best practices, including but not limited to BCSI, OSHA, TPI and local codes. Failure to properly handle, brace or otherwise install Component can result in serious injury or death.

General Notes: ** CUTTING OR DRILLING OF COMPONENTS SHOULD NOT BE DONE WITHOUT CONTACTING COMPONENT SUPPLIER FIRST. CUSTOMER TAKES FULL RESPONSIBILITY FOR COMPONENTS IF CUT BEFORE AUTHORIZATION.

** ALL BEARING POINTS MUST BE INSTALLED PRIOR TO SETTING ANY COMPONENTS.

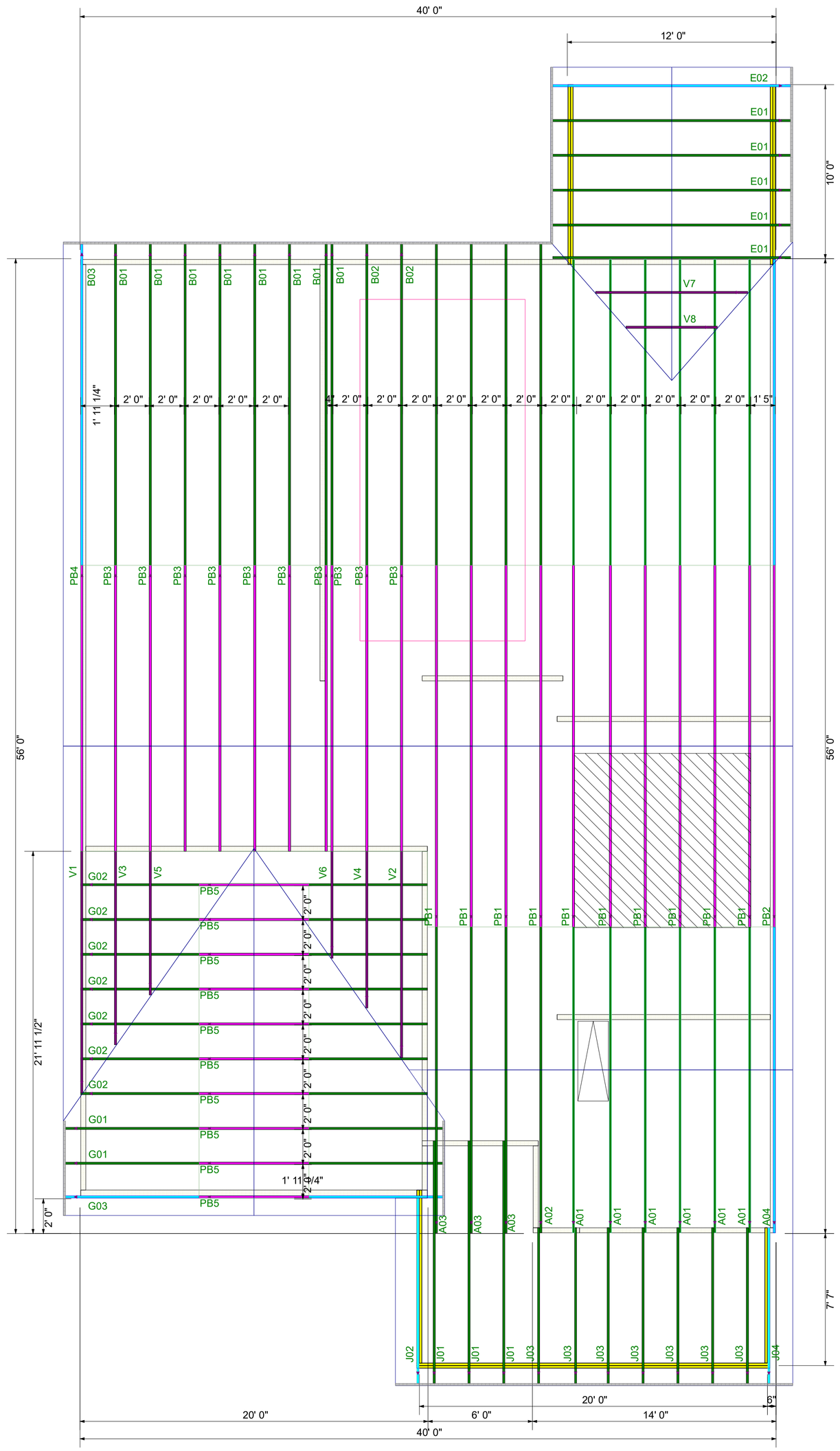

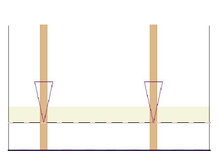

Truss Drawing Left End Indicator

** FRAMER MUST REFER TO PLANS WHILE SETTING COMPONENTS.

** DAMAGED COMPONENTS SHOULD NOT BE INSTALLED UNLESS TOLD TO BY THE COMPONENT PLANT.

** GIRDERS MUST BE FULLY CONNECTED TOGETHER PRIOR TO ADDING ANY LOADS.

** DIMENSIONS ARE READ AS: FOOT-INCH-SIXTEENTH.

** TRUSS TO TRUSS CONNECTIONS ARE TOE-NAILED, UNLESS NOTED OTHERWISE.

Revisions	
00/00/00	Name
00/00/00	Name
00/00/00	Name
00/00/00	Name
00/00/00	Name

THIS IS A TRUSS PLACEMENT DIAGRAM ONLY. These trusses are designed as individual components to be incorporated into the building design at the specification of the building designer. See individual design sheets for each truss design identified on the placement drawing. The building designer is responsible for temporary and permanent bracing of the roof and floor systems and for the overall structure. The design of the truss support structure including headers, beams, walls and columns is the responsibility of the building designer. For general guidance regarding the bracing consult "Bracing of Wood Trusses" available from the Truss Plate Institute, 583 D'Onofrio Drive: Madison, WI 53179

Kempsville Building Materials
A Division of the Carter Lumber Company

DRB HOMES NC

89 FaNC - COOPER 7

COMPONENT PLACEMENT PLAN

Scale: *NTS*

Date: 10/5/2022

Designer: ND

Project Number: **22090048**

Sheet Number: **1/1**

** TRIANGULAR SYMBOL NEAR END OF TRUSS INDICATES LEFT END OF TRUSS AS SHOWN ON INDIVIDUAL TRUSS DRAWINGS.

** PLUMBING DROPS NOTED ARE IN THE APPROXIMATE LOCATIONS PER PLAN. BUILDER TO VERIFY LOCATIONS BEFORE SETTING TRUSSES.

** REFER TO FINAL TRUSS ENGINEERING SHEETS FOR PLY TO PLY CONNECTIONS.

ENGINEERING BY TRENCO
A MiTek Affiliate

Trenco
818 Soundside Rd
Edenton, NC 27932

Re: 22090048
DRB HOMES - 89 FaNC

The truss drawing(s) referenced below have been prepared by Truss Engineering Co. under my direct supervision based on the parameters provided by Carter Components (Sanford, NC)).

Pages or sheets covered by this seal: I54559179 thru I54559207

My license renewal date for the state of North Carolina is December 31, 2022.

North Carolina COA: C-0844

NORTH CAROLINA PROFESSIONAL SEAL 036322 ENGINEER ERIC A. GILBERT

October 5,2022

Gilbert, Eric

IMPORTANT NOTE: The seal on these truss component designs is a certification that the engineer named is licensed in the jurisdiction(s) identified and that the designs comply with ANSI/TPI 1. These designs are based upon parameters shown (e.g., loads, supports, dimensions, shapes and design codes), which were given to MiTek or TRENCO. Any project specific information included is for MiTek's or TRENCO's customers file reference purpose only, and was not taken into account in the preparation of these designs. MiTek or TRENCO has not independently verified the applicability of the design parameters or the designs for any particular building. Before use, the building designer should verify applicability of design parameters and properly incorporate these designs into the overall building design per ANSI/TPI 1, Chapter 2.

Job	Truss	Truss Type	Qty	Ply	DRB HOMES - 89 FaNC
22090048	A01	Piggyback Base	6	1	I54559179 Job Reference (optional)

Carter Components (Sanford), Sanford, NC - 27332,

Run: 8.53 S Sep 22 2022 Print: 8.530 S Sep 22 2022 MiTek Industries, Inc. Wed Oct 05 09:11:27 Page: 1
ID:vmWSYKxMeSKeeaoGnh3QrczhvSE-RfC?PsB70Hq3NSgPqnL8w3uITXbGKWrCDoi7J4zJC?f

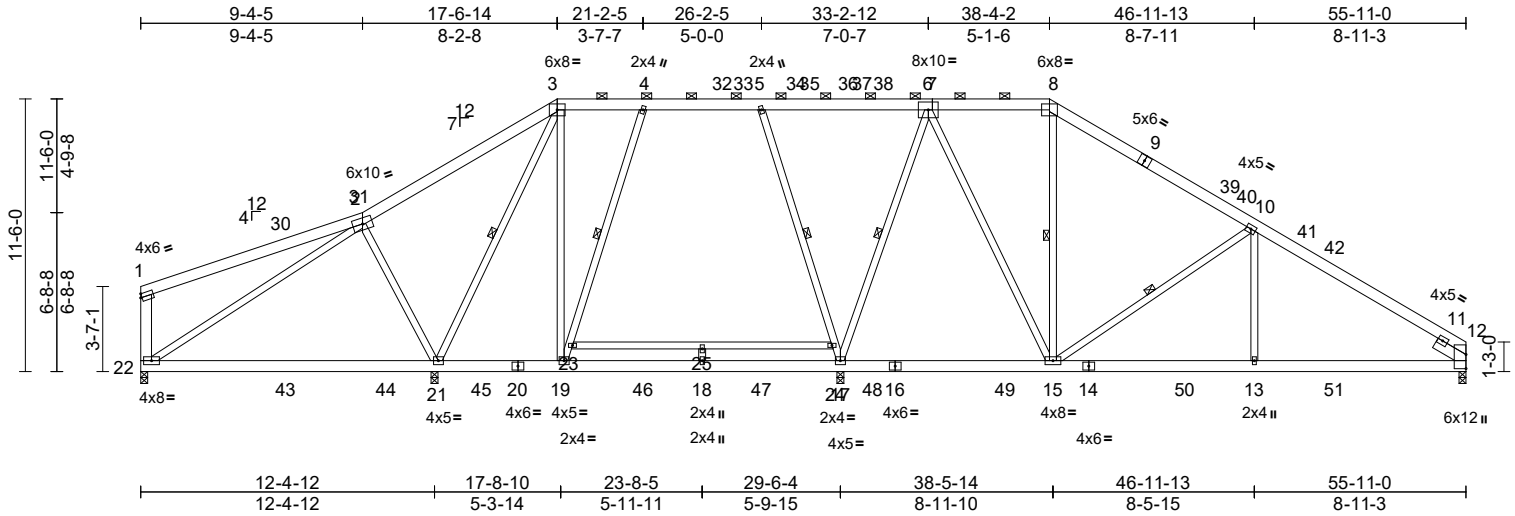

Scale = 1:97.2

Loading	(psf)	Spacing	2-0-0	CSI		DEFL	in	(loc)	l/defl	L/d	PLATES	GRIP
TCLL (roof)	20.0	Plate Grip DOL	1.15	TC	0.75	Vert(LL)	-0.22	21-22	>663	240	MT20	244/190
Snow (Pf)	20.0	Lumber DOL	1.15	BC	0.65	Vert(CT)	-0.39	21-22	>383	180		
TCDL	10.0	Rep Stress Incr	YES	WB	0.74	Horz(CT)	0.04	12	n/a	n/a		
BCLL	0.0*	Code	IRC2018/TPI2014	Matrix-MSH								
BCDL	10.0										Weight: 465 lb	FT = 20%

LUMBER

TOP CHORD 2x6 SP No.2
BOT CHORD 2x6 SP No.2
WEBS 2x4 SP No.2 *Except* 21-2,15-10,10-13,25-18:2x4 SP No.3, 22-1:2x6 SP No.2
SLIDER Right 2x6 SP No.2 -- 1-6-0

BRACING

TOP CHORD Structural wood sheathing directly applied or 5-0-13 oc purlins, except end verticals, and 2-0-0 oc purlins (6-0-0 max.): 3-8.
BOT CHORD Rigid ceiling directly applied or 6-0-0 oc bracing.
WEBS 1 Row at midpt 3-21, 4-19, 5-17, 6-17, 8-15, 10-15

REACTIONS (size) 12=0-3-8, 17=0-3-8, 21=0-3-8, 22=0-3-8
Max Horiz 22=265 (LC 11)
Max Uplift 12=-134 (LC 15), 17=-111 (LC 15), 21=-151 (LC 14), 22=-118 (LC 10)
Max Grav 12=1293 (LC 52), 17=1988 (LC 6), 21=1796 (LC 34), 22=498 (LC 43)

FORCES (lb) - Maximum Compression/Maximum Tension
TOP CHORD 1-2=-291/151, 2-3=-11/617, 3-4=-203/231, 4-5=-287/261, 5-6=-137/205, 6-8=-693/376, 8-10=-982/347, 10-12=-1762/371, 1-22=-466/188
BOT CHORD 21-22=-276/109, 19-21=-77/292, 18-19=-92/351, 17-18=-92/351, 15-17=-42/467, 13-15=-182/1435, 12-13=-182/1435
WEBS 2-21=-529/343, 3-21=-1131/0, 3-19=0/557, 19-23=-289/142, 4-23=-278/158, 5-24=-569/188, 17-24=-580/174, 6-17=-1043/333, 6-15=-151/966, 8-15=-166/159, 10-15=-958/304, 10-13=0/427, 2-22=-84/404, 23-25=-7/13, 24-25=-7/13, 18-25=0/45

NOTES

1) Unbalanced roof live loads have been considered for this design.
2) Wind: ASCE 7-16; Vult=130mph (3-second gust) Vasd=103mph; TCDL=6.0psf; BCDL=6.0psf; h=25ft; Cat. II; Exp B; Enclosed; MWFRS (envelope) exterior zone and C-C Exterior(2E) 8-0-0 to 13-11-14, Interior (1) 13-11-14 to 17-1-9, Exterior(2R) 17-1-9 to 33-10-11, Interior (1) 33-10-11 to 37-7-11, Exterior(2R) 37-7-11 to 54-9-1, Interior (1) 54-9-1 to 57-8-6, Exterior(2E) 57-8-6 to 63-8-4 zone; cantilever left and right exposed ; end vertical left and right exposed;C-C for members and forces & MWFRS for reactions shown; Lumber DOL=1.60 plate grip DOL=1.60
3) TCLL: ASCE 7-16; Pr=20.0 psf (roof LL: Lum DOL=1.15 Plate DOL=1.15); Pf=20.0 psf (Lum DOL=1.15 Plate DOL=1.15); Is=1.0; Rough Cat B; Fully Exp.; Ce=0.9; Cs=1.00; Ct=1.10
4) Unbalanced snow loads have been considered for this design.
5) 200.0lb AC unit load placed on the bottom chord, 23-8-8 from left end, supported at two points, 5-0-0 apart.
6) Provide adequate drainage to prevent water ponding.
7) This truss has been designed for a 10.0 psf bottom chord live load nonconcurrent with any other live loads.
8) * This truss has been designed for a live load of 20.0psf on the bottom chord in all areas where a rectangle 3-06-00 tall by 2-00-00 wide will fit between the bottom chord and any other members, with BCDL = 10.0psf.
9) One H2.5A Simpson Strong-Tie connectors recommended to connect truss to bearing walls due to UPLIFT at jt(s) 21, 17, 22, and 12. This connection is for uplift only and does not consider lateral forces.
10) This truss is designed in accordance with the 2018 International Residential Code sections R502.11.1 and R802.10.2 and referenced standard ANSI/TPI 1.
11) Graphical purlin representation does not depict the size or the orientation of the purlin along the top and/or bottom chord.

LOAD CASE(S) Standard

October 5,2022

WARNING - Verify design parameters and READ NOTES ON THIS AND INCLUDED MITEK REFERENCE PAGE MII-7473 rev. 5/19/2020 BEFORE USE.
Design valid for use only with MiTek® connectors. This design is based only upon parameters shown, and is for an individual building component, not a truss system. Before use, the building designer must verify the applicability of design parameters and properly incorporate this design into the overall building design. Bracing indicated is to prevent buckling of individual truss web and/or chord members only. Additional temporary and permanent bracing is always required for stability and to prevent collapse with possible personal injury and property damage. For general guidance regarding the fabrication, storage, delivery, erection and bracing of trusses and truss systems, see **ANSI/TPI1 Quality Criteria, DSB-89 and BCSI Building Component Safety Information** available from Truss Plate Institute, 2670 Crain Highway, Suite 203 Waldorf, MD 20601

ENGINEERING BY TRENCO A MiTek Affiliate
818 Soundside Road
Edenton, NC 27932

Job	Truss	Truss Type	Qty	Ply	DRB HOMES - 89 FaNC
22090048	A02	Piggyback Base	1	1	I54559180 Job Reference (optional)

Carter Components (Sanford), Sanford, NC - 27332,

Run: 8.53 S Sep 22 2022 Print: 8.530 S Sep 22 2022 MiTek Industries, Inc. Wed Oct 05 09:11:30 Page: 1
ID:vmWSYKxMeSKeeaoGnh3QrczhvSE-RfC?PsB70Hq3NSgPqnL8w3uITXbGKWrCDoi7J4zJC?f

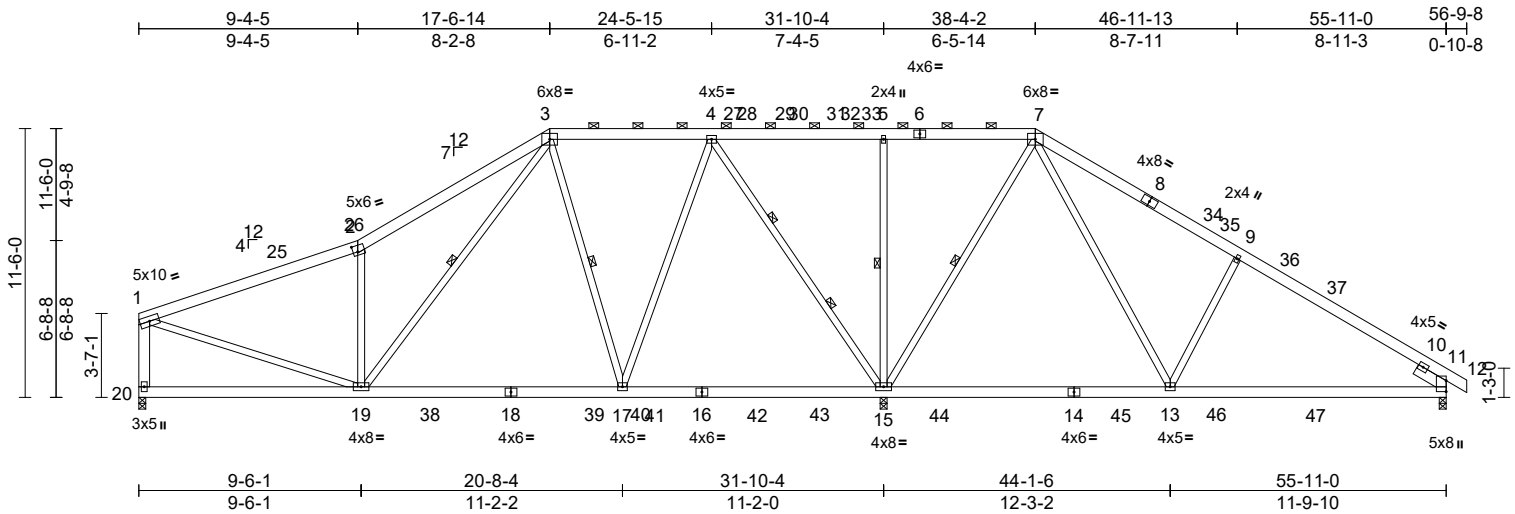

Scale = 1:98.5

Plate Offsets (X, Y): [2:0-2-5,0-3-4]

Loading	(psf)	Spacing	2-0-0	CSI		DEFL	in	(loc)	l/defl	L/d	PLATES	GRIP
TCLL (roof)	20.0	Plate Grip DOL	1.15	TC	0.84	Vert(LL)	-0.14	17-19	>999	240	MT20	244/190
Snow (Pf)	20.0	Lumber DOL	1.15	BC	0.69	Vert(CT)	-0.21	17-19	>999	180		
TCDL	10.0	Rep Stress Incr	YES	WB	0.95	Horz(CT)	0.01	15	n/a	n/a		
BCLL	0.0*	Code	IRC2018/TPI2014	Matrix-MSH								
BCDL	10.0										Weight: 441 lb	FT = 20%

LUMBER

TOP CHORD 2x6 SP No.2
BOT CHORD 2x6 SP 2400F 2.0E *Except* 18-16:2x6 SP No.2
WEBS 2x4 SP No.2 *Except* 19-1,19-2,13-9:2x4 SP No.3, 20-1:2x6 SP No.2
SLIDER Right 2x6 SP No.2 -- 1-6-0

BRACING

TOP CHORD Structural wood sheathing directly applied or 2-2-0 oc purlins, except end verticals, and 2-0-0 oc purlins (6-0-0 max.): 3-7.
BOT CHORD Rigid ceiling directly applied or 10-0-0 oc bracing, Except:
6-0-0 oc bracing: 13-15.
WEBS 1 Row at midpt 5-15, 7-15, 3-19, 3-17
WEBS 2 Rows at 1/3 pts 4-15

REACTIONS (size) 11=0-3-8, 15=0-3-8, 20=0-3-8
Max Horiz 20=261 (LC 13)
Max Uplift 11=-161 (LC 15), 20=-117 (LC 14)
Max Grav 11=1005 (LC 53), 15=3260 (LC 3), 20=1295 (LC 36)

FORCES (lb) - Maximum Compression/Maximum Tension
TOP CHORD 1-2=-1542/279, 2-3=-1778/496, 3-4=-755/245, 4-5=0/626, 5-7=0/626, 7-9=-920/346, 9-11=-1089/272, 11-12=0/26, 1-20=-1154/264
BOT CHORD 19-20=-236/236, 17-19=-75/889, 15-17=-83/557, 13-15=-61/194, 11-13=-104/874
WEBS 1-19=-105/1416, 2-19=-878/418, 5-15=-589/198, 7-15=-1285/291, 9-13=-725/353, 7-13=-213/1214, 3-19=-323/962, 3-17=-530/269, 4-17=0/1158, 4-15=-1620/220

NOTES

1) Unbalanced roof live loads have been considered for this design.
2) Wind: ASCE 7-16; Vult=130mph (3-second gust) Vasd=103mph; TCDL=6.0psf; BCDL=6.0psf; h=25ft; Cat. II; Exp B; Enclosed; MWFRS (envelope) exterior zone and C-C Exterior(2E) 8-0-0 to 13-11-14, Interior (1) 13-11-14 to 17-1-9, Exterior(2R) 17-1-9 to 33-9-13, Interior (1) 33-9-13 to 37-7-11, Exterior(2R) 37-7-11 to 54-10-6, Interior (1) 54-10-6 to 58-6-14, Exterior(2E) 58-6-14 to 64-6-12 zone; cantilever left and right exposed ; end vertical left and right exposed;C-C for members and forces & MWFRS for reactions shown; Lumber DOL=1.60 plate grip DOL=1.60
3) TCLL: ASCE 7-16; Pr=20.0 psf (roof LL: Lum DOL=1.15 Plate DOL=1.15); Pf=20.0 psf (Lum DOL=1.15 Plate DOL=1.15); Is=1.0; Rough Cat B; Fully Exp.; Ce=0.9; Cs=1.00; Ct=1.10
4) Unbalanced snow loads have been considered for this design.
5) This truss has been designed for greater of min roof live load of 12.0 psf or 1.00 times flat roof load of 20.0 psf on overhangs non-concurrent with other live loads.
6) 200.0lb AC unit load placed on the bottom chord, 23-11-12 from left end, supported at two points, 5-0-0 apart.
7) Provide adequate drainage to prevent water ponding.
8) This truss has been designed for a 10.0 psf bottom chord live load nonconcurrent with any other live loads.
9) * This truss has been designed for a live load of 20.0psf on the bottom chord in all areas where a rectangle 3-06-00 tall by 2-00-00 wide will fit between the bottom chord and any other members, with BCDL = 10.0psf.
10) One H2.5A Simpson Strong-Tie connectors recommended to connect truss to bearing walls due to UPLIFT at jt(s) 20 and 11. This connection is for uplift only and does not consider lateral forces.
11) This truss is designed in accordance with the 2018 International Residential Code sections R502.11.1 and R802.10.2 and referenced standard ANSI/TPI 1.
12) Graphical purlin representation does not depict the size or the orientation of the purlin along the top and/or bottom chord.

LOAD CASE(S) Standard

October 5,2022

WARNING - Verify design parameters and READ NOTES ON THIS AND INCLUDED MITEK REFERENCE PAGE MII-7473 rev. 5/19/2020 BEFORE USE.
Design valid for use only with MiTek® connectors. This design is based only upon parameters shown, and is for an individual building component, not a truss system. Before use, the building designer must verify the applicability of design parameters and properly incorporate this design into the overall building design. Bracing indicated is to prevent buckling of individual truss web and/or chord members only. Additional temporary and permanent bracing is always required for stability and to prevent collapse with possible personal injury and property damage. For general guidance regarding the fabrication, storage, delivery, erection and bracing of trusses and truss systems, see **ANSI/TPI1 Quality Criteria, DSB-89 and BCSI Building Component Safety Information** available from Truss Plate Institute, 2670 Crain Highway, Suite 203 Waldorf, MD 20601

ENGINEERING BY TRENCO A MiTek Affiliate
818 Soundside Road
Edenton, NC 27932

Job	Truss	Truss Type	Qty	Ply	DRB HOMES - 89 FaNC
22090048	A03	Piggyback Base	3	1	I54559181 Job Reference (optional)

Carter Components (Sanford), Sanford, NC - 27332,

Run: 8.53 S Sep 22 2022 Print: 8.530 S Sep 22 2022 MiTek Industries, Inc. Wed Oct 05 09:11:31 Page: 1
ID:aoRBENz7FOPJS6leKNt1qPzFzyH-RfC?PsB70Hq3NSgPqnL8w3uITXbGKWrCDoi7J4zJC?f

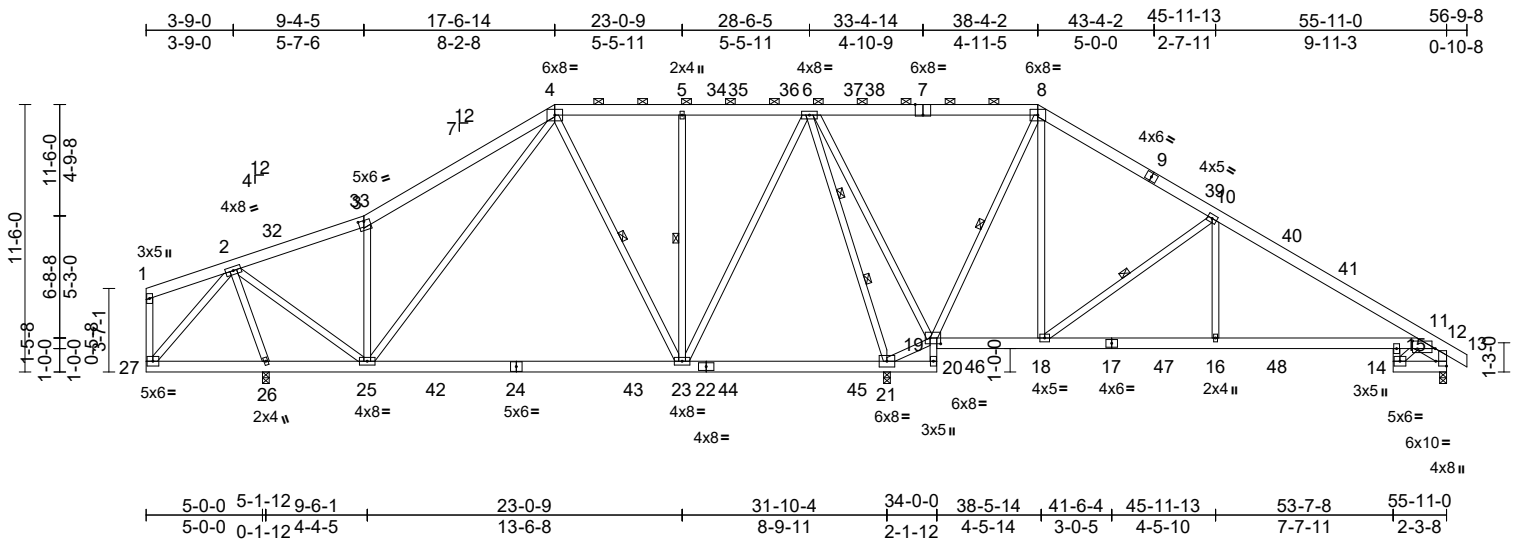

Scale = 1:99.1

Plate Offsets (X, Y): [3:0-3-0,0-0-8], [7:0-4-0,Edge], [11:0-11-12,0-3-15], [12:Edge,0-5-9], [19:0-5-8,0-3-0]

Loading	(psf)	Spacing	2-0-0	CSI		DEFL	in	(loc)	l/defl	L/d	PLATES	GRIP
TCLL (roof)	20.0	Plate Grip DOL	1.15	TC	0.86	Vert(LL)	-0.34	23-25	>944	240	MT20	244/190
Snow (Pf)	20.0	Lumber DOL	1.15	BC	0.77	Vert(CT)	-0.54	23-25	>592	180		
TCDL	10.0	Rep Stress Incr	YES	WB	0.93	Horz(CT)	0.05	12	n/a	n/a		
BCLL	0.0*	Code	IRC2018/TPI2014	Matrix-MSH								
BCDL	10.0										Weight: 481 lb	FT = 20%

LUMBER

TOP CHORD 2x6 SP No.2
BOT CHORD 2x6 SP No.2 *Except* 20-19,15-14:2x4 SP No.3, 22-20:2x6 SP 2400F 2.0E
WEBS 2x4 SP No.3 *Except* 23-4,5-23,23-6,19-6,19-8,4-25:2x4 SP No.2, 21-6:2x4 SP No.1
SLIDER Right 2x6 SP No.2 -- 1-5-11

BRACING

TOP CHORD Structural wood sheathing directly applied or 5-0-8 oc purlins, except end verticals, and 2-0-0 oc purlins (6-0-0 max.): 4-8.
BOT CHORD Rigid ceiling directly applied or 6-0-0 oc bracing.
WEBS 1 Row at midpt 4-23, 5-23, 8-19, 10-18
WEBS 2 Rows at 1/3 pts 6-21

REACTIONS (size) 12=0-3-8, 21=0-3-8, 26=0-3-8
Max Horiz 26=262 (LC 13)
Max Uplift 12=-113 (LC 15), 21=-244 (LC 15), 26=-211 (LC 14)
Max Grav 12=791 (LC 53), 21=3206 (LC 6), 26=1374 (LC 60)

FORCES (lb) - Maximum Compression/Maximum Tension
TOP CHORD 1-2=-56/85, 2-3=-576/101, 3-4=-762/261, 4-5=-205/257, 5-6=-205/257, 6-8=0/870, 8-10=-22/419, 10-11=-911/140, 11-12=-435/202, 12-13=0/26, 1-27=-82/71
BOT CHORD 26-27=-123/193, 25-26=-650/384, 23-25=-251/476, 21-23=-780/330, 20-21=-75/14, 19-20=-162/19, 18-19=-371/302, 16-18=0/709, 15-16=0/709, 11-15=0/591, 14-15=-89/306, 12-14=-153/432
WEBS 2-26=-1414/457, 2-25=-196/1314, 3-25=-649/278, 4-23=-620/160, 5-23=-353/121, 6-23=-101/1212, 6-21=-2351/401, 19-21=-1395/486, 6-19=-40/834, 8-19=-1540/313, 8-18=-82/900, 10-18=-1177/291, 10-16=0/519, 2-27=-245/193, 4-25=-53/471, 11-14=-402/150

NOTES

1) Unbalanced roof live loads have been considered for this design.
2) Wind: ASCE 7-16; Vult=130mph (3-second gust) Vasd=103mph; TCDL=6.0psf; BCDL=6.0psf; h=25ft; Cat. II; Exp B; Enclosed; MWFRS (envelope) exterior zone and C-C Exterior(2E) 7-11-0 to 13-6-2, Interior (1) 13-6-2 to 17-5-3, Exterior(2R) 17-5-3 to 33-3-0, Interior (1) 33-3-0 to 38-2-8, Exterior(2R) 38-2-8 to 53-9-1, Interior (1) 53-9-1 to 58-11-10, Exterior(2E) 58-11-10 to 64-6-12 zone; cantilever left and right exposed ; end vertical left and right exposed;C-C for members and forces & MWFRS for reactions shown; Lumber DOL=1.60 plate grip DOL=1.60
3) TCLL: ASCE 7-16; Pr=20.0 psf (roof LL: Lum DOL=1.15 Plate DOL=1.15); Pf=20.0 psf (Lum DOL=1.15 Plate DOL=1.15); Is=1.0; Rough Cat B; Fully Exp.; Ce=0.9; Cs=1.00; Ct=1.10
4) Unbalanced snow loads have been considered for this design.
5) This truss has been designed for greater of min roof live load of 12.0 psf or 1.00 times flat roof load of 20.0 psf on overhangs non-concurrent with other live loads.
6) Provide adequate drainage to prevent water ponding.
7) This truss has been designed for a 10.0 psf bottom chord live load nonconcurrent with any other live loads.
8) * This truss has been designed for a live load of 20.0psf on the bottom chord in all areas where a rectangle 3-06-00 tall by 2-00-00 wide will fit between the bottom chord and any other members, with BCDL = 10.0psf.
9) One H2.5A Simpson Strong-Tie connectors recommended to connect truss to bearing walls due to UPLIFT at jt(s) 12, 26, and 21. This connection is for uplift only and does not consider lateral forces.
10) This truss is designed in accordance with the 2018 International Residential Code sections R502.11.1 and R802.10.2 and referenced standard ANSI/TPI 1.
11) Graphical purlin representation does not depict the size or the orientation of the purlin along the top and/or bottom chord.

LOAD CASE(S) Standard

October 5,2022

WARNING - Verify design parameters and READ NOTES ON THIS AND INCLUDED MITEK REFERENCE PAGE MII-7473 rev. 5/19/2020 BEFORE USE.
Design valid for use only with MiTek® connectors. This design is based only upon parameters shown, and is for an individual building component, not a truss system. Before use, the building designer must verify the applicability of design parameters and properly incorporate this design into the overall building design. Bracing indicated is to prevent buckling of individual truss web and/or chord members only. Additional temporary and permanent bracing is always required for stability and to prevent collapse with possible personal injury and property damage. For general guidance regarding the fabrication, storage, delivery, erection and bracing of trusses and truss systems, see **ANSI/TPI1 Quality Criteria, DSB-89 and BCSI Building Component Safety Information** available from Truss Plate Institute, 2670 Crain Highway, Suite 203 Waldorf, MD 20601

ENGINEERING BY TRENCO A MiTek Affiliate
818 Soundside Road
Edenton, NC 27932

Job	Truss	Truss Type	Qty	Ply	DRB HOMES - 89 FaNC
22090048	A04	Piggyback Base Supported Gable	1	1	I54559182 Job Reference (optional)

Carter Components (Sanford), Sanford, NC - 27332, Run: 8.53 S Sep 22 2022 Print: 8.530 S Sep 22 2022 MiTek Industries, Inc. Wed Oct 05 09:11:33 Page: 1

ID:ACS0SGCfmETEfJzgbpcWMMzhrbI-RfC?PsB70Hq3NSgPqnL8w3uITXbGKWrCDoi7J4zJC?f

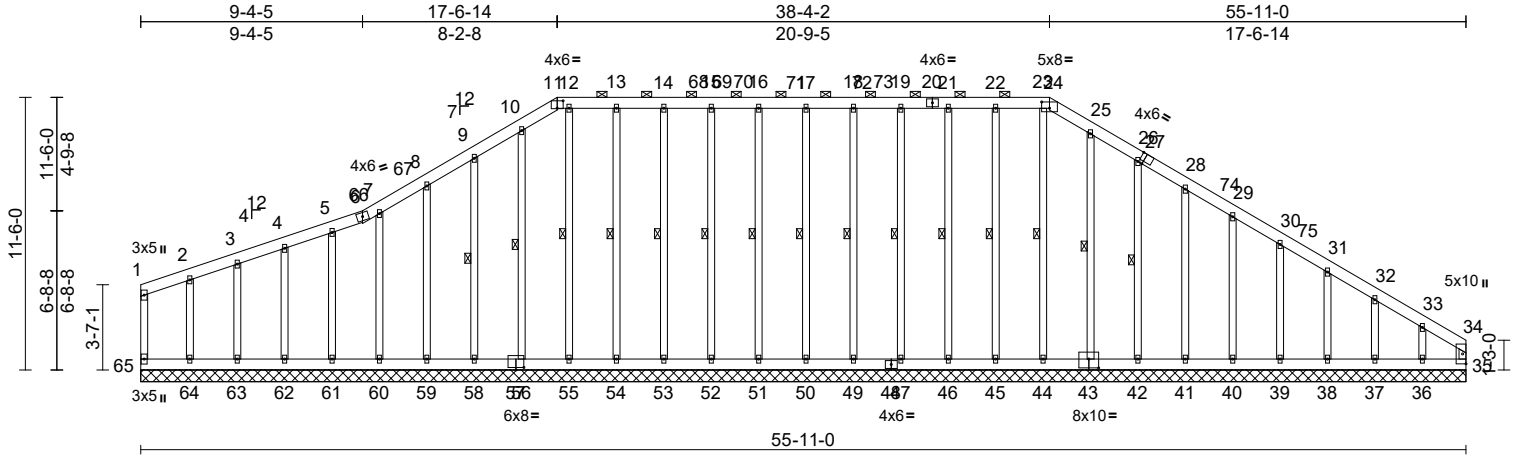

Scale = 1:97.2

Plate Offsets (X, Y): [11:0-3-0,0-3-12], [24:0-4-0,0-3-3], [27:0-2-1,Edge], [43:0-5-0,0-4-8], [57:0-4-0,0-1-4]

Loading	(psf)	Spacing	1-11-4	CSI		DEFL	in	(loc)	l/defl	L/d	PLATES	GRIP
TCLL (roof)	20.0	Plate Grip DOL	1.15	TC	0.31	Vert(LL)	n/a	-	n/a	999	MT20	244/190
Snow (Pf)	20.0	Lumber DOL	1.15	BC	0.07	Vert(TL)	n/a	-	n/a	999		
TCDL	10.0	Rep Stress Incr	YES	WB	0.22	Horiz(TL)	-0.01	35	n/a	n/a		
BCLL	0.0*	Code	IRC2018/TPI2014	Matrix-MR								
BCDL	10.0										Weight: 590 lb	FT = 20%

LUMBER

TOP CHORD 2x6 SP No.2
BOT CHORD 2x6 SP No.2
WEBS 2x4 SP No.3
OTHERS 2x4 SP No.3 *Except*
52-15,53-14,54-13,55-12,51-16,50-17,49-18,
47-19,46-21,45-22,44-23:2x4 SP No.2

BRACING

TOP CHORD Structural wood sheathing directly applied or 6-0-0 oc purlins, except end verticals, and 2-0-0 oc purlins (6-0-0 max.): 11-24.

BOT CHORD Rigid ceiling directly applied or 10-0-0 oc bracing.

WEBS 1 Row at midpt 15-52, 14-53, 13-54, 12-55, 10-56, 9-58, 16-51, 17-50, 18-49, 19-47, 21-46, 22-45, 23-44, 25-43, 26-42

REACTIONS (size) 35=55-11-0, 36=55-11-0, 37=55-11-0, 38=55-11-0, 39=55-11-0, 40=55-11-0, 41=55-11-0, 42=55-11-0, 43=55-11-0, 44=55-11-0, 45=55-11-0, 46=55-11-0, 47=55-11-0, 49=55-11-0, 50=55-11-0, 51=55-11-0, 52=55-11-0, 53=55-11-0, 54=55-11-0, 55=55-11-0, 56=55-11-0, 58=55-11-0, 59=55-11-0, 60=55-11-0, 61=55-11-0, 62=55-11-0, 63=55-11-0, 64=55-11-0, 65=55-11-0

Max Horiz 65=269 (LC 11)

Max Uplift 35=-232 (LC 11), 36=-167 (LC 15), 37=-27 (LC 15), 38=-53 (LC 15), 39=-48 (LC 15), 40=-49 (LC 15), 41=-50 (LC 15), 42=-54 (LC 15), 43=-24 (LC 15), 45=-22 (LC 10), 46=-30 (LC 11), 47=-25 (LC 11), 49=-24 (LC 10), 50=-25 (LC 10), 51=-24 (LC 10), 52=-25 (LC 11), 53=-28 (LC 11), 54=-26 (LC 10), 58=-59 (LC 14), 59=-50 (LC 14), 60=-59 (LC 14), 61=-42 (LC 14), 62=-32 (LC 10), 63=-37 (LC 10), 64=-54 (LC 14), 65=-21 (LC 10)

Max Grav 35=189 (LC 19), 36=285 (LC 24), 37=155 (LC 40), 38=166 (LC 28), 39=217 (LC 46), 40=236 (LC 46), 41=233 (LC 46), 42=238 (LC 46), 43=229 (LC 46), 44=181 (LC 53), 45=218 (LC 39), 46=218 (LC 39), 47=212 (LC 39), 49=190 (LC 20), 50=177 (LC 20), 51=189 (LC 21), 52=209 (LC 39), 53=218 (LC 39), 54=218 (LC 39), 55=178 (LC 53), 56=224 (LC 42), 58=238 (LC 42), 59=238 (LC 42), 60=205 (LC 42), 61=205 (LC 43), 62=215 (LC 43), 63=212 (LC 43), 64=225 (LC 43), 65=87 (LC 43)

FORCES (lb) - Maximum Compression/Maximum Tension

TOP CHORD 1-65=-71/35, 1-2=-49/54, 2-3=-59/78, 3-4=-69/101, 4-5=-78/124, 5-6=-90/149, 6-7=-80/151, 7-8=-117/207, 8-9=-135/275, 9-10=-156/357, 10-11=-160/396, 11-12=-147/382, 12-13=-147/382, 13-14=-147/382, 14-15=-147/382, 15-16=-147/382, 16-17=-147/382, 17-18=-147/382, 18-19=-147/382, 19-21=-147/382, 21-22=-147/382, 22-23=-147/382, 23-24=-147/382, 24-25=-163/399, 25-26=-154/348, 26-28=-133/266, 28-29=-115/228, 29-30=-96/231, 30-31=-100/235, 31-32=-118/239, 32-33=-148/237, 33-34=-209/287, 34-35=-128/171

October 5,2022

Continued on page 2

WARNING - Verify design parameters and READ NOTES ON THIS AND INCLUDED MITEK REFERENCE PAGE MII-7473 rev. 5/19/2020 BEFORE USE.
Design valid for use only with MiTek® connectors. This design is based only upon parameters shown, and is for an individual building component, not a truss system. Before use, the building designer must verify the applicability of design parameters and properly incorporate this design into the overall building design. Bracing indicated is to prevent buckling of individual truss web and/or chord members only. Additional temporary and permanent bracing is always required for stability and to prevent collapse with possible personal injury and property damage. For general guidance regarding the fabrication, storage, delivery, erection and bracing of trusses and truss systems, see **ANSI/TPI1 Quality Criteria, DSB-89 and BCSI Building Component Safety Information** available from Truss Plate Institute, 2670 Crain Highway, Suite 203 Waldorf, MD 20601

ENGINEERING BY TRENCO A MiTek Affiliate
818 Soundside Road
Edenton, NC 27932

BOT CHORD 64-65=-238/161, 63-64=-238/161, 62-63=-238/161, 61-62=-238/161, 60-61=-238/161, 59-60=-238/161, 58-59=-238/161, 56-58=-238/161, 55-56=-238/161, 54-55=-238/161, 53-54=-238/161, 52-53=-238/161, 51-52=-238/161, 50-51=-238/161, 49-50=-238/161, 47-49=-238/161, 46-47=-238/161, 45-46=-238/161, 44-45=-238/161, 42-44=-238/161, 41-42=-237/161, 40-41=-237/161, 39-40=-237/161, 38-39=-237/161, 37-38=-237/161, 36-37=-237/161, 35-36=-237/161

WEBS 15-52=-171/58, 14-53=-179/93, 13-54=-179/84, 12-55=-139/6, 10-56=-185/56, 9-58=-200/143, 8-59=-199/111, 7-60=-166/90, 5-61=-166/65, 4-62=-176/56, 3-63=-174/56, 2-64=-184/73, 16-51=-151/48, 17-50=-138/48, 18-49=-152/48, 19-47=-173/67, 21-46=-179/97, 22-45=-179/74, 23-44=-143/10, 25-43=-190/79, 26-42=-199/141, 28-41=-195/99, 29-40=-197/72, 30-39=-179/72, 31-38=-123/73, 32-37=-117/65, 33-36=-178/126

NOTES

1) Unbalanced roof live loads have been considered for this design.
2) Wind: ASCE 7-16; Vult=130mph (3-second gust) Vasd=103mph; TCDL=6.0psf; BCDL=6.0psf; h=25ft; Cat. II; Exp B; Enclosed; MWFRS (envelope) exterior zone and C-C Corner(3E) 7-11-0 to 13-10-2, Exterior (2N) 13-10-2 to 19-4-3, Corner(3R) 19-4-3 to 31-4-0, Exterior(2N) 31-4-0 to 39-10-2, Corner(3R) 39-10-2 to 51-10-2, Exterior(2N) 51-10-2 to 57-6-10, Corner(3E) 57-6-10 to 63-6-8 zone; cantilever left and right exposed ; end vertical left and right exposed;C-C for members and forces & MWFRS for reactions shown; Lumber DOL=1.60 plate grip DOL=1.60
3) Truss designed for wind loads in the plane of the truss only. For studs exposed to wind (normal to the face), see Standard Industry Gable End Details as applicable, or consult qualified building designer as per ANSI/TPI 1.
4) TCLL: ASCE 7-16; Pr=20.0 psf (roof LL: Lum DOL=1.15 Plate DOL=1.15); Pf=20.0 psf (Lum DOL=1.15 Plate DOL=1.15); Is=1.0; Rough Cat B; Fully Exp.; Ce=0.9; Cs=1.00; Ct=1.10
5) Unbalanced snow loads have been considered for this design.
6) Provide adequate drainage to prevent water ponding.
7) All plates are 2x4 MT20 unless otherwise indicated.
8) Gable requires continuous bottom chord bearing.
9) Truss to be fully sheathed from one face or securely braced against lateral movement (i.e. diagonal web).
10) Gable studs spaced at 2-0-0 oc.
11) This truss has been designed for a 10.0 psf bottom chord live load nonconcurrent with any other live loads.
12) * This truss has been designed for a live load of 20.0psf on the bottom chord in all areas where a rectangle 3-06-00 tall by 2-00-00 wide will fit between the bottom chord and any other members.
13) N/A
14) This truss is designed in accordance with the 2018 International Residential Code sections R502.11.1 and R802.10.2 and referenced standard ANSI/TPI 1.
15) Graphical purlin representation does not depict the size or the orientation of the purlin along the top and/or bottom chord.

LOAD CASE(S) Standard

WARNING - Verify design parameters and READ NOTES ON THIS AND INCLUDED MITEK REFERENCE PAGE MII-7473 rev. 5/19/2020 BEFORE USE.
Design valid for use only with MiTek® connectors. This design is based only upon parameters shown, and is for an individual building component, not a truss system. Before use, the building designer must verify the applicability of design parameters and properly incorporate this design into the overall building design. Bracing indicated is to prevent buckling of individual truss web and/or chord members only. Additional temporary and permanent bracing is always required for stability and to prevent collapse with possible personal injury and property damage. For general guidance regarding the fabrication, storage, delivery, erection and bracing of trusses and truss systems, see **ANSI/TPI1 Quality Criteria, DSB-89 and BCSI Building Component Safety Information** available from Truss Plate Institute, 2670 Crain Highway, Suite 203 Waldorf, MD 20601

ENGINEERING BY TRENCO A MiTek Affiliate
818 Soundside Road
Edenton, NC 27932

Job	Truss	Truss Type	Qty	Ply	DRB HOMES - 89 FaNC
22090048	B01	Piggyback Base	8	1	I54559183 Job Reference (optional)

Carter Components (Sanford), Sanford, NC - 27332, Run: 8.53 S Sep 22 2022 Print: 8.530 S Sep 22 2022 MiTek Industries, Inc. Wed Oct 05 09:11:34 Page: 1
ID:U0VysG?d9oeHisHgY8i761zFzil-RfC?PsB70Hq3NSgPqnL8w3uITXbGKWrCDoi7J4zJC?f

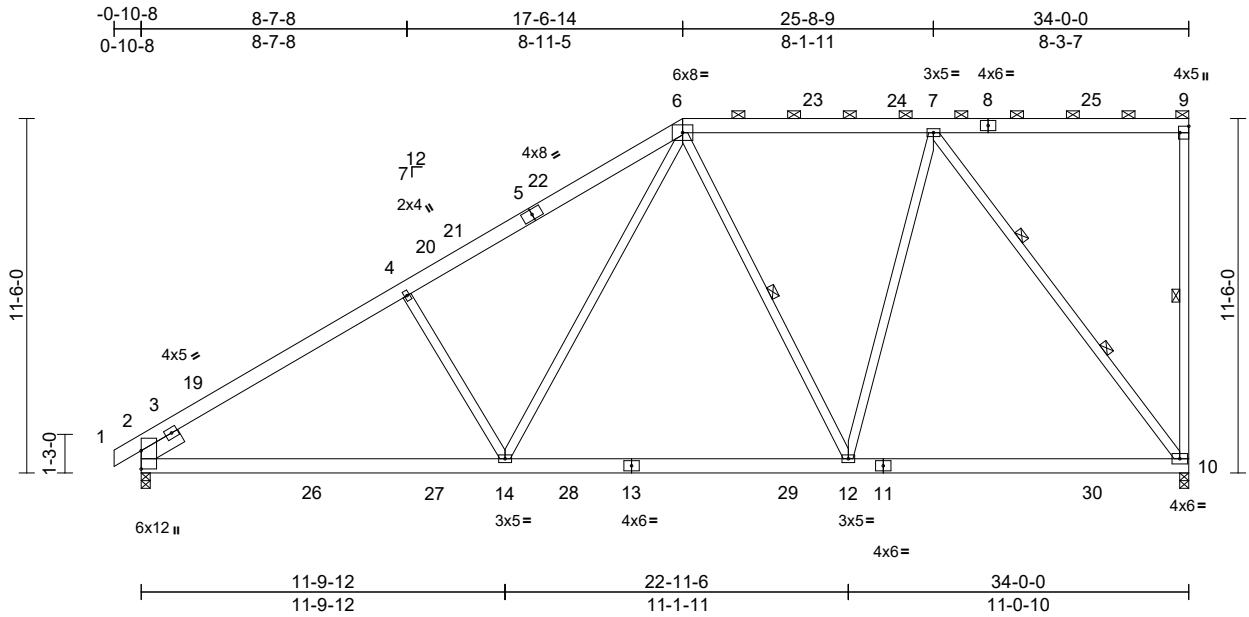

Scale = 1:74.8

Plate Offsets (X, Y): [9:Edge,0-3-8]

Loading	(psf)	Spacing	2-0-0	CSI		DEFL	in	(loc)	l/defl	L/d	PLATES	GRIP
TCLL (roof)	20.0	Plate Grip DOL	1.15	TC	0.87	Vert(LL)	-0.19	10-12	>999	240	MT20	244/190
Snow (Pf)	20.0	Lumber DOL	1.15	BC	0.92	Vert(CT)	-0.31	10-12	>999	180		
TCDL	10.0	Rep Stress Incr	YES	WB	0.93	Horz(CT)	0.05	10	n/a	n/a		
BCLL	0.0*	Code	IRC2018/TPI2014	Matrix-MSH								
BCDL	10.0										Weight: 268 lb	FT = 20%

LUMBER

TOP CHORD 2x6 SP No.2
BOT CHORD 2x6 SP No.2
WEBS 2x4 SP No.2 *Except* 7-10:2x4 SP No.1, 4-14:2x4 SP No.3
SLIDER Left 2x6 SP No.2 -- 1-6-0

BRACING

TOP CHORD Structural wood sheathing directly applied or 2-2-0 oc purlins, except end verticals, and 2-0-0 oc purlins (6-0-0 max.): 6-9.
BOT CHORD Rigid ceiling directly applied or 2-2-0 oc bracing.
WEBS 1 Row at midpt 9-10, 6-12
WEBS 2 Rows at 1/3 pts 7-10

REACTIONS (size) 2=0-3-8, 10=0-3-8
Max Horiz 2=396 (LC 13)
Max Uplift 2=-183 (LC 14), 10=-207 (LC 11)
Max Grav 2=1654 (LC 40), 10=1778 (LC 37)

FORCES (lb) - Maximum Compression/Maximum Tension
TOP CHORD 1-2=0/26, 2-4=-2230/291, 4-6=-2039/347, 6-7=-1175/225, 7-9=-151/162, 9-10=-292/95
BOT CHORD 2-14=-362/1983, 12-14=-244/1243, 10-12=-218/1010
WEBS 6-14=-135/1042, 6-12=-436/182, 7-12=-33/988, 7-10=-1686/229, 4-14=-559/298

NOTES

1) Unbalanced roof live loads have been considered for this design.
2) Wind: ASCE 7-16; Vult=130mph (3-second gust) Vasd=103mph; TCDL=6.0psf; BCDL=6.0psf; h=25ft; Cat. II; Exp B; Enclosed; MWFRS (envelope) exterior zone and C-C Exterior(2E) -0-10-8 to 2-1-8, Interior (1) 2-1-8 to 13-3-15, Exterior(2R) 13-3-15 to 21-9-12, Interior (1) 21-9-12 to 30-10-4, Exterior(2E) 30-10-4 to 33-10-4 zone; cantilever left and right exposed ; end vertical left and right exposed;C-C for members and forces & MWFRS for reactions shown; Lumber DOL=1.60 plate grip DOL=1.60
3) TCLL: ASCE 7-16; Pr=20.0 psf (roof LL: Lum DOL=1.15 Plate DOL=1.15); Pf=20.0 psf (Lum DOL=1.15 Plate DOL=1.15); Is=1.0; Rough Cat B; Fully Exp.; Ce=0.9; Cs=1.00; Ct=1.10
4) Unbalanced snow loads have been considered for this design.
5) This truss has been designed for greater of min roof live load of 12.0 psf or 1.00 times flat roof load of 20.0 psf on overhangs non-concurrent with other live loads.
6) Provide adequate drainage to prevent water ponding.
7) This truss has been designed for a 10.0 psf bottom chord live load nonconcurrent with any other live loads.
8) * This truss has been designed for a live load of 20.0psf on the bottom chord in all areas where a rectangle 3-06-00 tall by 2-00-00 wide will fit between the bottom chord and any other members, with BCDL = 10.0psf.
9) One H2.5A Simpson Strong-Tie connectors recommended to connect truss to bearing walls due to UPLIFT at jt(s) 10 and 2. This connection is for uplift only and does not consider lateral forces.
10) This truss is designed in accordance with the 2018 International Residential Code sections R502.11.1 and R802.10.2 and referenced standard ANSI/TPI 1.
11) Graphical purlin representation does not depict the size or the orientation of the purlin along the top and/or bottom chord.

LOAD CASE(S) Standard

October 5,2022

WARNING - Verify design parameters and READ NOTES ON THIS AND INCLUDED MITEK REFERENCE PAGE MII-7473 rev. 5/19/2020 BEFORE USE.
Design valid for use only with MiTek® connectors. This design is based only upon parameters shown, and is for an individual building component, not a truss system. Before use, the building designer must verify the applicability of design parameters and properly incorporate this design into the overall building design. Bracing indicated is to prevent buckling of individual truss web and/or chord members only. Additional temporary and permanent bracing is always required for stability and to prevent collapse with possible personal injury and property damage. For general guidance regarding the fabrication, storage, delivery, erection and bracing of trusses and truss systems, see **ANSI/TPI1 Quality Criteria, DSB-89 and BCSI Building Component Safety Information** available from Truss Plate Institute, 2670 Crain Highway, Suite 203 Waldorf, MD 20601

ENGINEERING BY TRENCO A MiTek Affiliate
818 Soundside Road
Edenton, NC 27932

Job	Truss	Truss Type	Qty	Ply	DRB HOMES - 89 FaNC
22090048	B02	Piggyback Base	2	1	I54559184 Job Reference (optional)

Carter Components (Sanford), Sanford, NC - 27332,

Run: 8.53 S Sep 22 2022 Print: 8.530 S Sep 22 2022 MiTek Industries, Inc. Wed Oct 05 09:11:35 Page: 1
ID:U0VysG?d9oeHisHgY8i761zFzil-RfC?PsB70Hq3NSgPqnL8w3uITXbGKWrCDoi7J4zJC?f

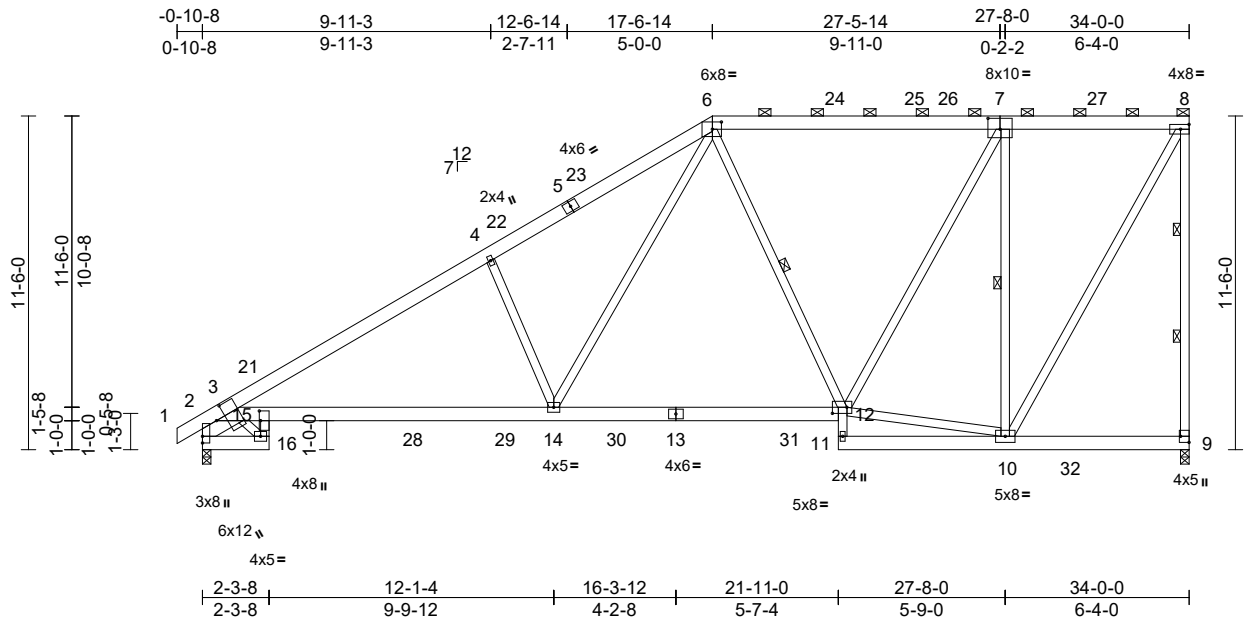

Scale = 1:79.4

Plate Offsets (X, Y): [3:0-4-12,0-4-0], [6:0-3-12,0-3-0], [7:0-5-0,0-4-8], [9:Edge,0-3-8], [12:0-6-0,0-2-8], [15:0-4-0,0-0-8]

Loading	(psf)	Spacing	2-0-0	CSI		DEFL	in	(loc)	l/defl	L/d	PLATES	GRIP
TCLL (roof)	20.0	Plate Grip DOL	1.15	TC	0.88	Vert(LL)	-0.30	14-15	>999	240	MT20	244/190
Snow (Pf)	20.0	Lumber DOL	1.15	BC	0.74	Vert(CT)	-0.56	14-15	>726	180		
TCDL	10.0	Rep Stress Incr	YES	WB	0.76	Horz(CT)	0.20	9	n/a	n/a		
BCLL	0.0*	Code	IRC2018/TPI2014	Matrix-MSH								
BCDL	10.0										Weight: 294 lb	FT = 20%

LUMBER

TOP CHORD 2x6 SP No.2
BOT CHORD 2x6 SP No.2 *Except* 16-15,12-11:2x4 SP No.3, 3-13:2x6 SP 2400F 2.0E
WEBS 2x4 SP No.2 *Except* 8-9:2x4 SP No.1, 10-12,14-4,3-16:2x4 SP No.3
SLIDER Left 2x6 SP No.2 -- 1-5-11

BRACING

TOP CHORD Structural wood sheathing directly applied or 2-2-0 oc purlins, except end verticals, and 2-0-0 oc purlins (4-3-4 max.): 6-8.
BOT CHORD Rigid ceiling directly applied or 10-0-0 oc bracing, Except:
6-0-0 oc bracing: 10-11.
WEBS 1 Row at midpt 6-12, 7-10
WEBS 2 Rows at 1/3 pts 8-9

REACTIONS (size) 2=0-3-8, 9=0-3-8
Max Horiz 2=396 (LC 13)
Max Uplift 2=-183 (LC 14), 9=-207 (LC 11)
Max Grav 2=1634 (LC 40), 9=1741 (LC 37)

FORCES (lb) - Maximum Compression/Maximum Tension
TOP CHORD 1-2=0/26, 2-3=-809/137, 3-4=-2517/329, 4-6=-2407/421, 6-8=-1194/237, 8-9=-1613/216
BOT CHORD 2-16=-328/892, 15-16=-233/676, 3-15=-283/2069, 14-15=-335/2272, 12-14=-274/1332, 11-12=0/94, 10-11=-61/54, 9-10=-144/162
WEBS 6-12=-529/195, 10-12=-142/870, 7-12=-93/934, 7-10=-1381/324, 8-10=-213/1681, 4-14=-677/305, 6-14=-209/1497, 3-16=-877/333

NOTES

1) Unbalanced roof live loads have been considered for this design.
2) Wind: ASCE 7-16; Vult=130mph (3-second gust) Vasd=103mph; TCDL=6.0psf; BCDL=6.0psf; h=25ft; Cat. II; Exp B; Enclosed; MWFRS (envelope) exterior zone and C-C Exterior(2E) -0-10-8 to 2-1-8, Interior (1) 2-1-8 to 13-3-15, Exterior(2R) 13-3-15 to 21-9-12, Interior (1) 21-9-12 to 30-10-4, Exterior(2E) 30-10-4 to 33-10-4 zone; cantilever left and right exposed ; end vertical left and right exposed;C-C for members and forces & MWFRS for reactions shown; Lumber DOL=1.60 plate grip DOL=1.60
3) TCLL: ASCE 7-16; Pr=20.0 psf (roof LL: Lum DOL=1.15 Plate DOL=1.15); Pf=20.0 psf (Lum DOL=1.15 Plate DOL=1.15); Is=1.0; Rough Cat B; Fully Exp.; Ce=0.9; Cs=1.00; Ct=1.10
4) Unbalanced snow loads have been considered for this design.
5) This truss has been designed for greater of min roof live load of 12.0 psf or 1.00 times flat roof load of 20.0 psf on overhangs non-concurrent with other live loads.
6) Provide adequate drainage to prevent water ponding.
7) This truss has been designed for a 10.0 psf bottom chord live load nonconcurrent with any other live loads.
8) * This truss has been designed for a live load of 20.0psf on the bottom chord in all areas where a rectangle 3-06-00 tall by 2-00-00 wide will fit between the bottom chord and any other members, with BCDL = 10.0psf.
9) One H2.5A Simpson Strong-Tie connectors recommended to connect truss to bearing walls due to UPLIFT at jt(s) 9 and 2. This connection is for uplift only and does not consider lateral forces.
10) This truss is designed in accordance with the 2018 International Residential Code sections R502.11.1 and R802.10.2 and referenced standard ANSI/TPI 1.
11) Graphical purlin representation does not depict the size or the orientation of the purlin along the top and/or bottom chord.

LOAD CASE(S) Standard

October 5,2022

WARNING - Verify design parameters and READ NOTES ON THIS AND INCLUDED MITEK REFERENCE PAGE MII-7473 rev. 5/19/2020 BEFORE USE.
Design valid for use only with MiTek® connectors. This design is based only upon parameters shown, and is for an individual building component, not a truss system. Before use, the building designer must verify the applicability of design parameters and properly incorporate this design into the overall building design. Bracing indicated is to prevent buckling of individual truss web and/or chord members only. Additional temporary and permanent bracing is always required for stability and to prevent collapse with possible personal injury and property damage. For general guidance regarding the fabrication, storage, delivery, erection and bracing of trusses and truss systems, see **ANSI/TPI1 Quality Criteria, DSB-89 and BCSI Building Component Safety Information** available from Truss Plate Institute, 2670 Crain Highway, Suite 203 Waldorf, MD 20601

ENGINEERING BY TRENCO A MiTek Affiliate
818 Soundside Road
Edenton, NC 27932

Job	Truss	Truss Type	Qty	Ply	DRB HOMES - 89 FaNC
22090048	B03	Piggyback Base Supported Gable	1	1	I54559185 Job Reference (optional)

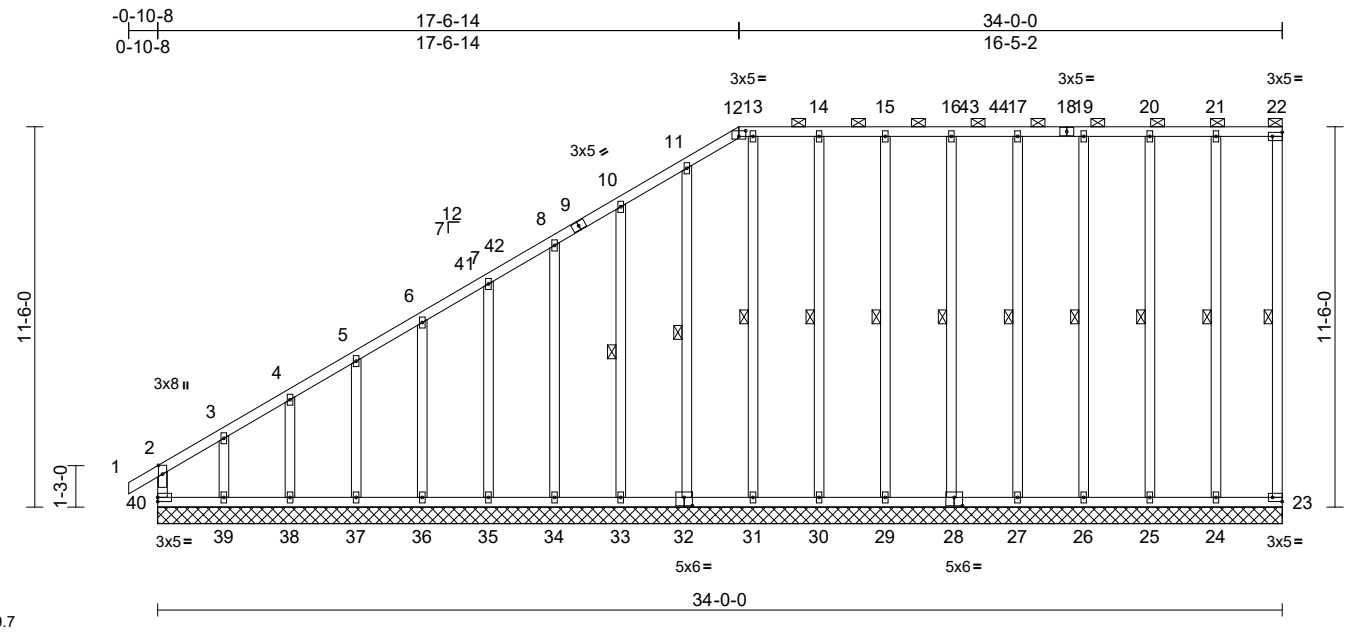

Scale = 1:69.7

Plate Offsets (X, Y): [12:0-2-8,0-2-1], [22:Edge,0-1-8], [23:Edge,0-1-8], [28:0-3-0,0-3-0], [32:0-3-0,0-3-0]

Loading	(psf)	Spacing	1-11-4	CSI		DEFL	in	(loc)	l/defl	L/d	PLATES	GRIP
TCLL (roof)	20.0	Plate Grip DOL	1.15	TC	0.70	Vert(LL)	n/a	-	n/a	999	MT20	244/190
Snow (Pf)	20.0	Lumber DOL	1.15	BC	0.32	Vert(CT)	n/a	-	n/a	999		
TCDL	10.0	Rep Stress Incr	YES	WB	0.22	Horz(CT)	-0.01	23	n/a	n/a		
BCLL	0.0*	Code	IRC2018/TPI2014	Matrix-MR								
BCDL	10.0										Weight: 325 lb	FT = 20%

LUMBER

TOP CHORD 2x4 SP No.2
BOT CHORD 2x4 SP No.2
WEBS 2x4 SP No.3 *Except* 22-23:2x4 SP No.2
OTHERS 2x4 SP No.2 *Except* 33-10,34-8,35-7,36-6,37-5,38-4,39-3:2x4 SP No.3

BRACING

TOP CHORD Structural wood sheathing directly applied or 6-0-0 oc purlins, except end verticals, and 2-0-0 oc purlins (6-0-0 max.): 12-22.
BOT CHORD Rigid ceiling directly applied or 6-0-0 oc bracing.
WEBS 1 Row at midpt 22-23, 21-24, 20-25, 19-26, 17-27, 16-28, 15-29, 14-30, 13-31, 11-32, 10-33

REACTIONS (size) 23=34-0-0, 24=34-0-0, 25=34-0-0, 26=34-0-0, 27=34-0-0, 28=34-0-0, 29=34-0-0, 30=34-0-0, 31=34-0-0, 32=34-0-0, 33=34-0-0, 34=34-0-0, 35=34-0-0, 36=34-0-0, 37=34-0-0, 38=34-0-0, 39=34-0-0, 40=34-0-0
Max Horiz 40=396 (LC 13)
Max Uplift 23=-20 (LC 11), 24=-42 (LC 10), 25=-36 (LC 11), 26=-30 (LC 10), 27=-25 (LC 11), 28=-27 (LC 11), 29=-24 (LC 10), 30=-34 (LC 10), 31=-63 (LC 11), 32=-35 (LC 14), 33=-55 (LC 14), 34=-47 (LC 14), 35=-50 (LC 14), 36=-46 (LC 14), 37=-62 (LC 14), 39=-273 (LC 14), 40=-160 (LC 12)
Max Grav 23=82 (LC 35), 24=223 (LC 35), 25=215 (LC 35), 26=215 (LC 35), 27=199 (LC 35), 28=211 (LC 35), 29=216 (LC 35), 30=220 (LC 35), 31=178 (LC 35), 32=216 (LC 36), 33=213 (LC 36), 34=218 (LC 36), 35=193 (LC 36), 36=160 (LC 24), 37=168 (LC 40), 38=158 (LC 1), 39=275 (LC 40), 40=367 (LC 11)

FORCES (lb) - Maximum Compression/Maximum Tension

TOP CHORD 2-40=-263/114, 1-2=0/30, 2-3=-381/244, 3-4=-286/184, 4-5=-272/176, 5-6=-243/157, 6-7=-227/143, 7-8=-214/139, 8-10=-200/136, 10-11=-189/137, 11-12=-167/170, 12-13=-144/163, 13-14=-144/163, 14-15=-144/163, 15-16=-144/163, 16-17=-143/163, 17-19=-143/163, 19-20=-143/163, 20-21=-143/163, 21-22=-143/163, 22-23=-130/131
BOT CHORD 39-40=-143/162, 38-39=-143/162, 37-38=-143/162, 36-37=-143/162, 35-36=-143/162, 34-35=-143/162, 33-34=-143/162, 31-33=-143/162, 30-31=-143/162, 29-30=-143/162, 27-29=-143/162, 26-27=-143/162, 25-26=-143/162, 24-25=-143/162, 23-24=-143/162
WEBS 21-24=-182/121, 20-25=-177/63, 19-26=-175/49, 17-27=-162/49, 16-28=-172/50, 15-29=-176/48, 14-30=-182/57, 13-31=-138/87, 11-32=-177/58, 10-33=-175/77, 8-34=-179/71, 7-35=-155/72, 6-36=-122/71, 5-37=-125/78, 4-38=-119/48, 3-39=-178/193

NOTES

1) Unbalanced roof live loads have been considered for this design.
2) Wind: ASCE 7-16; Vult=130mph (3-second gust) Vasd=103mph; TCDL=6.0psf; BCDL=6.0psf; h=25ft; Cat. II; Exp B; Enclosed; MWFRS (envelope) exterior zone and C-C Corner(3E) -0-10-8 to 2-0-0, Exterior(2N) 2-0-0 to 14-6-14, Corner(3R) 14-6-14 to 20-6-14, Exterior(2N) 20-6-14 to 30-10-4, Corner(3E) 30-10-4 to 33-10-4 zone; cantilever left and right exposed ; end vertical left and right exposed;C-C for members and forces & MWFRS for reactions shown; Lumber DOL=1.60 plate grip DOL=1.60
3) Truss designed for wind loads in the plane of the truss only. For studs exposed to wind (normal to the face), see Standard Industry Gable End Details as applicable, or consult qualified building designer as per ANSI/TPI 1.
4) TCLL: ASCE 7-16; Pr=20.0 psf (roof LL: Lum DOL=1.15 Plate DOL=1.15); Pf=20.0 psf (Lum DOL=1.15 Plate DOL=1.15); Is=1.0; Rough Cat B; Fully Exp.; Ce=0.9; Cs=1.00; Ct=1.10
5) Unbalanced snow loads have been considered for this design.

October 5,2022

Continued on page 2

WARNING - Verify design parameters and READ NOTES ON THIS AND INCLUDED MITEK REFERENCE PAGE MII-7473 rev. 5/19/2020 BEFORE USE.
Design valid for use only with MiTek® connectors. This design is based only upon parameters shown, and is for an individual building component, not a truss system. Before use, the building designer must verify the applicability of design parameters and properly incorporate this design into the overall building design. Bracing indicated is to prevent buckling of individual truss web and/or chord members only. Additional temporary and permanent bracing is always required for stability and to prevent collapse with possible personal injury and property damage. For general guidance regarding the fabrication, storage, delivery, erection and bracing of trusses and truss systems, see **ANSI/TPI1 Quality Criteria, DSB-89 and BCSI Building Component Safety Information** available from Truss Plate Institute, 2670 Crain Highway, Suite 203 Waldorf, MD 20601

ENGINEERING BY TRENCO A MiTek Affiliate
818 Soundside Road
Edenton, NC 27932

6) This truss has been designed for greater of min roof live load of 12.0 psf or 1.00 times flat roof load of 20.0 psf on overhangs non-concurrent with other live loads.
7) Provide adequate drainage to prevent water ponding.
8) All plates are 2x4 MT20 unless otherwise indicated.
9) Gable requires continuous bottom chord bearing.
10) Truss to be fully sheathed from one face or securely braced against lateral movement (i.e. diagonal web).
11) Gable studs spaced at 2-0-0 oc.
12) This truss has been designed for a 10.0 psf bottom chord live load nonconcurrent with any other live loads.
13) * This truss has been designed for a live load of 20.0psf on the bottom chord in all areas where a rectangle 3-06-00 tall by 2-00-00 wide will fit between the bottom chord and any other members.
14) Provide mechanical connection (by others) of truss to bearing plate capable of withstanding 160 lb uplift at joint 40, 20 lb uplift at joint 23, 42 lb uplift at joint 24, 36 lb uplift at joint 25, 30 lb uplift at joint 26, 25 lb uplift at joint 27, 27 lb uplift at joint 28, 24 lb uplift at joint 29, 34 lb uplift at joint 30, 63 lb uplift at joint 31, 35 lb uplift at joint 32, 55 lb uplift at joint 33, 47 lb uplift at joint 34, 50 lb uplift at joint 35, 46 lb uplift at joint 36, 62 lb uplift at joint 37 and 273 lb uplift at joint 39.
15) This truss is designed in accordance with the 2018 International Residential Code sections R502.11.1 and R802.10.2 and referenced standard ANSI/TPI 1.
16) Graphical purlin representation does not depict the size or the orientation of the purlin along the top and/or bottom chord.

LOAD CASE(S) Standard

WARNING - Verify design parameters and READ NOTES ON THIS AND INCLUDED MITEK REFERENCE PAGE MII-7473 rev. 5/19/2020 BEFORE USE.
Design valid for use only with MiTek® connectors. This design is based only upon parameters shown, and is for an individual building component, not a truss system. Before use, the building designer must verify the applicability of design parameters and properly incorporate this design into the overall building design. Bracing indicated is to prevent buckling of individual truss web and/or chord members only. Additional temporary and permanent bracing is always required for stability and to prevent collapse with possible personal injury and property damage. For general guidance regarding the fabrication, storage, delivery, erection and bracing of trusses and truss systems, see **ANSI/TPI1 Quality Criteria, DSB-89 and BCSI Building Component Safety Information** available from Truss Plate Institute, 2670 Crain Highway, Suite 203 Waldorf, MD 20601

ENGINEERING BY TRENCO A MiTek Affiliate
818 Soundside Road
Edenton, NC 27932

Job	Truss	Truss Type	Qty	Ply	DRB HOMES - 89 FaNC
22090048	E01	Common	5	1	I54559186 Job Reference (optional)

Carter Components (Sanford), Sanford, NC - 27332,

Run: 8.53 S Sep 22 2022 Print: 8.530 S Sep 22 2022 MiTek Industries, Inc. Wed Oct 05 09:11:36 Page: 1
ID:_chtVMf3J_GcW_b8at2KjlzFzYt-RfC?PsB70Hq3NSgPqnL8w3uITXbGKWrCDoi7J4zJC?f

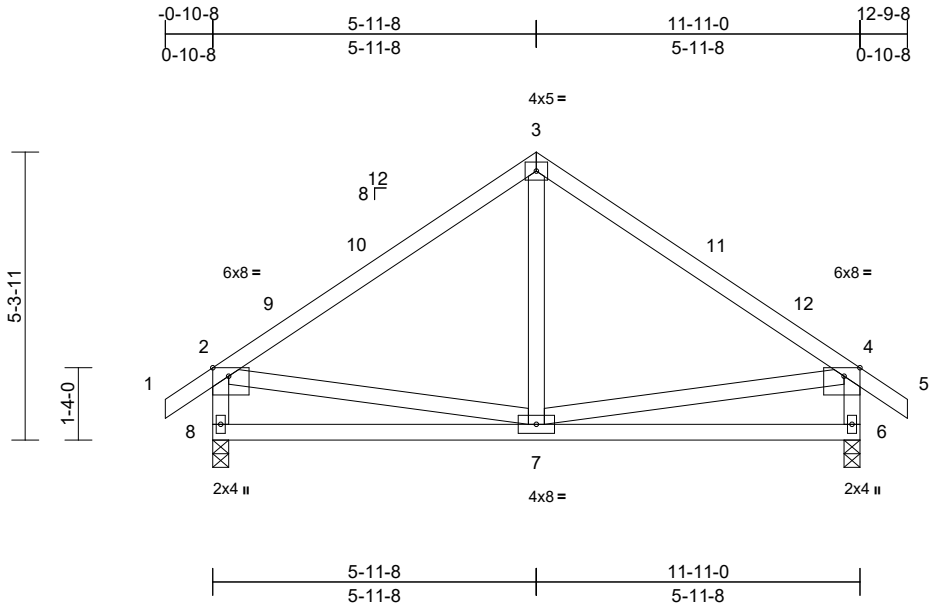

Scale = 1:42.4

Plate Offsets (X, Y): [2:0-3-8,Edge], [4:0-3-8,Edge]

Loading	(psf)	Spacing	2-0-0	CSI		DEFL	in	(loc)	l/defl	L/d	PLATES	GRIP
TCLL (roof)	20.0	Plate Grip DOL	1.15	TC	0.91	Vert(LL)	-0.02	7-8	>999	240	MT20	244/190
Snow (Pf)	20.0	Lumber DOL	1.15	BC	0.30	Vert(CT)	-0.05	7-8	>999	180		
TCDL	10.0	Rep Stress Incr	YES	WB	0.10	Horz(CT)	0.00	6	n/a	n/a		
BCLL	0.0*	Code	IRC2018/TPI2014	Matrix-MSH								
BCDL	10.0										Weight: 69 lb	FT = 20%

LUMBER
TOP CHORD 2x4 SP No.2
BOT CHORD 2x4 SP No.2
WEBS 2x4 SP No.3

BRACING
TOP CHORD Structural wood sheathing directly applied or 6-0-0 oc purlins, except end verticals.
BOT CHORD Rigid ceiling directly applied or 10-0-0 oc bracing.

REACTIONS (size) 6=0-3-8, 8=0-3-8
Max Horiz 8=145 (LC 13)
Max Uplift 6=-56 (LC 15), 8=-56 (LC 14)
Max Grav 6=619 (LC 22), 8=619 (LC 21)

FORCES (lb) - Maximum Compression/Maximum Tension
TOP CHORD 1-2=0/34, 2-3=-539/122, 3-4=-539/122, 4-5=0/34, 2-8=-566/164, 4-6=-566/164
BOT CHORD 7-8=-153/263, 6-7=-85/252
WEBS 3-7=0/208, 2-7=-36/249, 4-7=-39/249

NOTES
1) Unbalanced roof live loads have been considered for this design.
2) Wind: ASCE 7-16; Vult=130mph (3-second gust) Vasd=103mph; TCDL=6.0psf; BCDL=6.0psf; h=25ft; Cat. II; Exp B; Enclosed; MWFRS (envelope) exterior zone and C-C Exterior(2E) -0-10-8 to 2-1-8, Interior (1) 2-1-8 to 2-11-8, Exterior(2R) 2-11-8 to 8-11-8, Interior (1) 8-11-8 to 9-9-8, Exterior(2E) 9-9-8 to 12-9-8 zone; cantilever left and right exposed ; end vertical left and right exposed;C-C for members and forces & MWFRS for reactions shown; Lumber DOL=1.60 plate grip DOL=1.60
3) TCLL: ASCE 7-16; Pr=20.0 psf (roof LL: Lum DOL=1.15 Plate DOL=1.15); Pf=20.0 psf (Lum DOL=1.15 Plate DOL=1.15); Is=1.0; Rough Cat B; Fully Exp.; Ce=0.9; Cs=1.00; Ct=1.10
4) Unbalanced snow loads have been considered for this design.
5) This truss has been designed for greater of min roof live load of 12.0 psf or 1.00 times flat roof load of 20.0 psf on overhangs non-concurrent with other live loads.
6) This truss has been designed for a 10.0 psf bottom chord live load nonconcurrent with any other live loads.
7) * This truss has been designed for a live load of 20.0psf on the bottom chord in all areas where a rectangle 3-06-00 tall by 2-00-00 wide will fit between the bottom chord and any other members.
8) One H2.5A Simpson Strong-Tie connectors recommended to connect truss to bearing walls due to UPLIFT at jt(s) 8 and 6. This connection is for uplift only and does not consider lateral forces.
9) This truss is designed in accordance with the 2018 International Residential Code sections R502.11.1 and R802.10.2 and referenced standard ANSI/TPI 1.

LOAD CASE(S) Standard

October 5,2022

WARNING - Verify design parameters and READ NOTES ON THIS AND INCLUDED MITEK REFERENCE PAGE MII-7473 rev. 5/19/2020 BEFORE USE.
Design valid for use only with MiTek® connectors. This design is based only upon parameters shown, and is for an individual building component, not a truss system. Before use, the building designer must verify the applicability of design parameters and properly incorporate this design into the overall building design. Bracing indicated is to prevent buckling of individual truss web and/or chord members only. Additional temporary and permanent bracing is always required for stability and to prevent collapse with possible personal injury and property damage. For general guidance regarding the fabrication, storage, delivery, erection and bracing of trusses and truss systems, see **ANSI/TPI1 Quality Criteria, DSB-89 and BCSI Building Component Safety Information** available from Truss Plate Institute, 2670 Crain Highway, Suite 203 Waldorf, MD 20601

ENGINEERING BY TRENCO A MiTek Affiliate
818 Soundside Road
Edenton, NC 27932

Job	Truss	Truss Type	Qty	Ply	DRB HOMES - 89 FaNC
22090048	E02	Common Structural Gable	1	1	I54559187 Job Reference (optional)

Carter Components (Sanford), Sanford, NC - 27332,

Run: 8.53 S Sep 22 2022 Print: 8.530 S Sep 22 2022 MiTek Industries, Inc. Wed Oct 05 09:11:36 Page: 1
ID:sNxOLkiaNCm2?cvvpi6Gu8zFzYp-RfC?PsB70Hq3NSgPqnL8w3uITXbGKWrCDoi7J4zJC?f

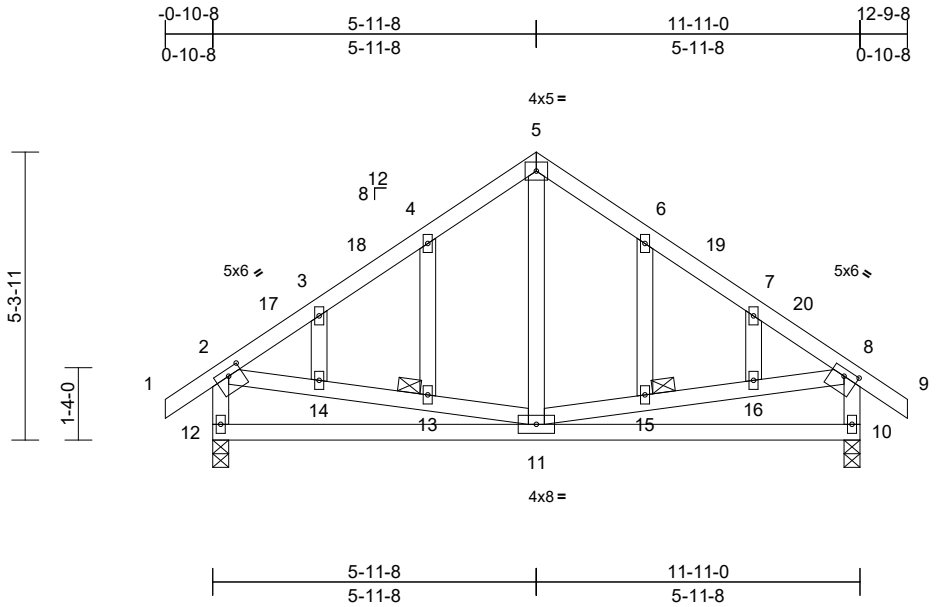

Scale = 1:42.4

Plate Offsets (X, Y): [2:0-3-0,0-1-8], [8:0-3-0,0-1-8]

Loading	(psf)	Spacing	2-0-0	CSI		DEFL	in	(loc)	l/defl	L/d	PLATES	GRIP
TCLL (roof)	20.0	Plate Grip DOL	1.15	TC	0.69	Vert(LL)	-0.02	11-12	>999	240	MT20	244/190
Snow (Pf)	20.0	Lumber DOL	1.15	BC	0.29	Vert(CT)	-0.05	11-12	>999	180		
TCDL	10.0	Rep Stress Incr	YES	WB	0.70	Horz(CT)	0.00	10	n/a	n/a		
BCLL	0.0*	Code	IRC2018/TPI2014	Matrix-MSH								
BCDL	10.0										Weight: 81 lb	FT = 20%

LUMBER
TOP CHORD 2x4 SP No.2
BOT CHORD 2x4 SP No.2
WEBS 2x4 SP No.3
OTHERS 2x4 SP No.3

BRACING
TOP CHORD Structural wood sheathing directly applied or 6-0-0 oc purlins, except end verticals.
BOT CHORD Rigid ceiling directly applied or 10-0-0 oc bracing.
JOINTS 1 Brace at Jt(s): 13, 15

REACTIONS (size) 10=0-3-8, 12=0-3-8
Max Horiz 12=-145 (LC 12)
Max Uplift 10=-56 (LC 15), 12=-56 (LC 14)
Max Grav 10=619 (LC 22), 12=619 (LC 21)

FORCES (lb) - Maximum Compression/Maximum Tension
TOP CHORD 1-2=0/34, 2-3=-511/79, 3-4=-436/98, 4-5=-380/134, 5-6=-380/134, 6-7=-436/98, 7-8=-511/79, 8-9=0/34, 2-12=-563/162, 8-10=-563/162
BOT CHORD 11-12=-135/232, 10-11=-57/206
WEBS 5-11=-11/209, 2-14=-22/253, 13-14=-22/250, 11-13=-27/254, 11-15=-31/254, 15-16=-26/250, 8-16=-25/253, 4-13=-82/43, 3-14=-23/13, 6-15=-82/43, 7-16=-23/13

NOTES
1) Unbalanced roof live loads have been considered for this design.
2) Wind: ASCE 7-16; Vult=130mph (3-second gust) Vasd=103mph; TCDL=6.0psf; BCDL=6.0psf; h=25ft; Cat. II; Exp B; Enclosed; MWFRS (envelope) exterior zone and C-C Exterior(2E) -0-10-8 to 1-11-8, Interior (1) 1-11-8 to 2-11-8, Exterior(2R) 2-11-8 to 8-11-8, Interior (1) 8-11-8 to 9-9-8, Exterior(2E) 9-9-8 to 12-9-8 zone; cantilever left and right exposed ; end vertical left and right exposed;C-C for members and forces & MWFRS for reactions shown; Lumber DOL=1.60 plate grip DOL=1.60
3) Truss designed for wind loads in the plane of the truss only. For studs exposed to wind (normal to the face), see Standard Industry Gable End Details as applicable, or consult qualified building designer as per ANSI/TPI 1.
4) TCLL: ASCE 7-16; Pr=20.0 psf (roof LL: Lum DOL=1.15 Plate DOL=1.15); Pf=20.0 psf (Lum DOL=1.15 Plate DOL=1.15); Is=1.0; Rough Cat B; Fully Exp.; Ce=0.9; Cs=1.00; Ct=1.10
5) Unbalanced snow loads have been considered for this design.
6) This truss has been designed for greater of min roof live load of 12.0 psf or 1.00 times flat roof load of 20.0 psf on overhangs non-concurrent with other live loads.
7) All plates are 2x4 MT20 unless otherwise indicated.
8) Truss to be fully sheathed from one face or securely braced against lateral movement (i.e. diagonal web).
9) Gable studs spaced at 2-0-0 oc.
10) This truss has been designed for a 10.0 psf bottom chord live load nonconcurrent with any other live loads.
11) * This truss has been designed for a live load of 20.0psf on the bottom chord in all areas where a rectangle 3-06-00 tall by 2-00-00 wide will fit between the bottom chord and any other members.
12) One H2.5A Simpson Strong-Tie connectors recommended to connect truss to bearing walls due to UPLIFT at jt(s) 12 and 10. This connection is for uplift only and does not consider lateral forces.
13) This truss is designed in accordance with the 2018 International Residential Code sections R502.11.1 and R802.10.2 and referenced standard ANSI/TPI 1.

LOAD CASE(S) Standard

October 5,2022

WARNING - Verify design parameters and READ NOTES ON THIS AND INCLUDED MITEK REFERENCE PAGE MII-7473 rev. 5/19/2020 BEFORE USE.
Design valid for use only with MiTek® connectors. This design is based only upon parameters shown, and is for an individual building component, not a truss system. Before use, the building designer must verify the applicability of design parameters and properly incorporate this design into the overall building design. Bracing indicated is to prevent buckling of individual truss web and/or chord members only. Additional temporary and permanent bracing is always required for stability and to prevent collapse with possible personal injury and property damage. For general guidance regarding the fabrication, storage, delivery, erection and bracing of trusses and truss systems, see **ANSI/TPI1 Quality Criteria, DSB-89 and BCSI Building Component Safety Information** available from Truss Plate Institute, 2670 Crain Highway, Suite 203 Waldorf, MD 20601

ENGINEERING BY TRENCO A MiTek Affiliate
818 Soundside Road
Edenton, NC 27932

Job	Truss	Truss Type	Qty	Ply	DRB HOMES - 89 FaNC
22090048	G01	Piggyback Base	2	1	I54559188 Job Reference (optional)

Carter Components (Sanford), Sanford, NC - 27332,

Run: 8.53 S Sep 22 2022 Print: 8.530 S Sep 22 2022 MiTek Industries, Inc. Wed Oct 05 09:11:37 Page: 1
ID:wN9MV2a7ngO0fSyKmTVeHIzhpg9-RfC?PsB70Hq3NSgPqnL8w3uITXbGKWrCDoi7J4zJC?f

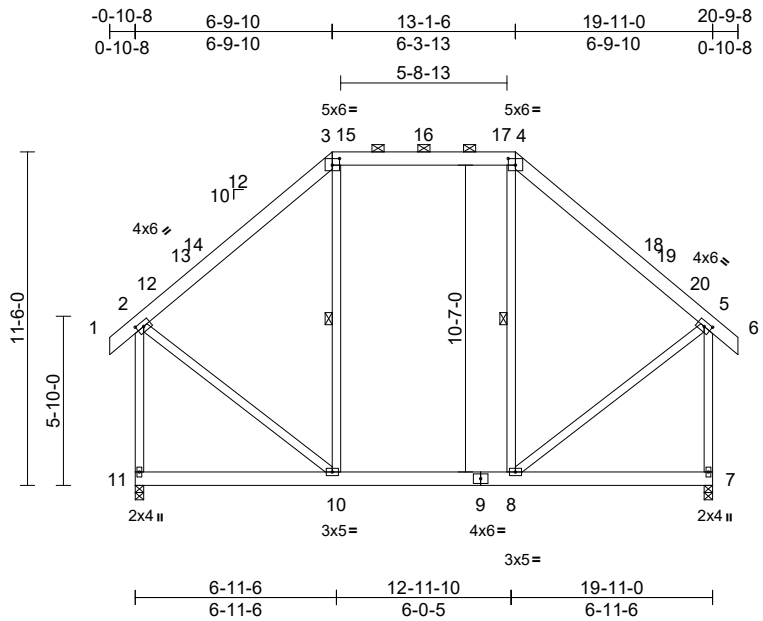

Scale = 1:79.5

Plate Offsets (X, Y): [2:0-2-14,0-2-0], [3:0-3-0,0-2-12], [4:0-3-0,0-2-12], [5:0-2-14,0-2-0]

Loading	(psf)	Spacing	2-0-0	CSI		DEFL	in	(loc)	l/defl	L/d	PLATES	GRIP
TCLL (roof)	20.0	Plate Grip DOL	1.15	TC	0.94	Vert(LL)	0.12	10-11	>999	240	MT20	244/190
Snow (Pf)	20.0	Lumber DOL	1.15	BC	0.44	Vert(CT)	-0.14	10-11	>999	180		
TCDL	10.0	Rep Stress Incr	YES	WB	0.28	Horz(CT)	0.00	7	n/a	n/a		
BCLL	0.0*	Code	IRC2018/TPI2014	Matrix-MSH		Attic	-0.07	8-10	>999	360		
BCDL	10.0										Weight: 181 lb	FT = 20%

LUMBER

TOP CHORD 2x6 SP No.2
BOT CHORD 2x6 SP No.2
WEBS 2x4 SP No.2 *Except* 10-2,7-5,8-5:2x4 SP No.3

BRACING

TOP CHORD Structural wood sheathing directly applied or 6-0-0 oc purlins, except end verticals, and 2-0-0 oc purlins (6-0-0 max.): 3-4.
BOT CHORD Rigid ceiling directly applied or 10-0-0 oc bracing.
WEBS 1 Row at midpt 3-10, 4-8

REACTIONS (size) 7=0-3-8, 11=0-3-8
Max Horiz 11=-338 (LC 12)
Max Grav 7=1207 (LC 46), 11=1207 (LC 46)

FORCES (lb) - Maximum Compression/Maximum Tension
TOP CHORD 1-2=0/39, 2-3=-859/99, 3-4=-541/148, 4-5=-859/99, 5-6=0/39, 2-11=-1164/17, 5-7=-1164/17
BOT CHORD 10-11=-317/295, 8-10=-35/598, 7-8=-67/80
WEBS 2-10=-9/737, 5-8=-8/737, 3-10=-222/189, 4-8=-222/188

NOTES

1) Unbalanced roof live loads have been considered for this design.
2) Wind: ASCE 7-16; Vult=130mph (3-second gust) Vasd=103mph; TCDL=6.0psf; BCDL=6.0psf; h=25ft; Cat. II; Exp B; Enclosed; MWFRS (envelope) exterior zone and C-C Exterior(2E) -0-10-8 to 2-1-8, Interior (1) 2-1-8 to 2-6-11, Exterior(2R) 2-6-11 to 17-4-5, Interior (1) 17-4-5 to 17-9-8, Exterior(2E) 17-9-8 to 20-9-8 zone; cantilever left and right exposed ; end vertical left and right exposed;C-C for members and forces & MWFRS for reactions shown; Lumber DOL=1.60 plate grip DOL=1.60
3) TCLL: ASCE 7-16; Pr=20.0 psf (roof LL: Lum DOL=1.15 Plate DOL=1.15); Pf=20.0 psf (Lum DOL=1.15 Plate DOL=1.15); Is=1.0; Rough Cat B; Fully Exp.; Ce=0.9; Cs=1.00; Ct=1.10
4) Unbalanced snow loads have been considered for this design.
5) This truss has been designed for greater of min roof live load of 12.0 psf or 1.00 times flat roof load of 20.0 psf on overhangs non-concurrent with other live loads.
6) Provide adequate drainage to prevent water ponding.
7) This truss has been designed for a 10.0 psf bottom chord live load nonconcurrent with any other live loads.
8) * This truss has been designed for a live load of 20.0psf on the bottom chord in all areas where a rectangle 3-06-00 tall by 2-00-00 wide will fit between the bottom chord and any other members.
9) Ceiling dead load (5.0 psf) on member(s). 3-4; Wall dead load (5.0psf) on member(s).3-10, 4-8
10) Bottom chord live load (40.0 psf) and additional bottom chord dead load (5.0 psf) applied only to room. 8-10
11) This truss is designed in accordance with the 2018 International Residential Code sections R502.11.1 and R802.10.2 and referenced standard ANSI/TPI 1.
12) Graphical purlin representation does not depict the size or the orientation of the purlin along the top and/or bottom chord.
13) Attic room checked for L/360 deflection.

LOAD CASE(S) Standard

October 5,2022

WARNING - Verify design parameters and READ NOTES ON THIS AND INCLUDED MITEK REFERENCE PAGE MII-7473 rev. 5/19/2020 BEFORE USE.
Design valid for use only with MiTek® connectors. This design is based only upon parameters shown, and is for an individual building component, not a truss system. Before use, the building designer must verify the applicability of design parameters and properly incorporate this design into the overall building design. Bracing indicated is to prevent buckling of individual truss web and/or chord members only. Additional temporary and permanent bracing is always required for stability and to prevent collapse with possible personal injury and property damage. For general guidance regarding the fabrication, storage, delivery, erection and bracing of trusses and truss systems, see **ANSI/TPI1 Quality Criteria, DSB-89 and BCSI Building Component Safety Information** available from Truss Plate Institute, 2670 Crain Highway, Suite 203 Waldorf, MD 20601

ENGINEERING BY TRENCO A MiTek Affiliate
818 Soundside Road
Edenton, NC 27932

Job	Truss	Truss Type	Qty	Ply	DRB HOMES - 89 FaNC
22090048	G02	Piggyback Base	7	1	I54559189 Job Reference (optional)

Carter Components (Sanford), Sanford, NC - 27332,

Run: 8.53 S Sep 22 2022 Print: 8.530 S Sep 22 2022 MiTek Industries, Inc. Wed Oct 05 09:11:37 Page: 1
ID:wN9MV2a7ngO0fSyKmTVeHIzhpg9-RfC?PsB70Hq3NSgPqnL8w3uITXbGKWrCDoi7J4zJC?f

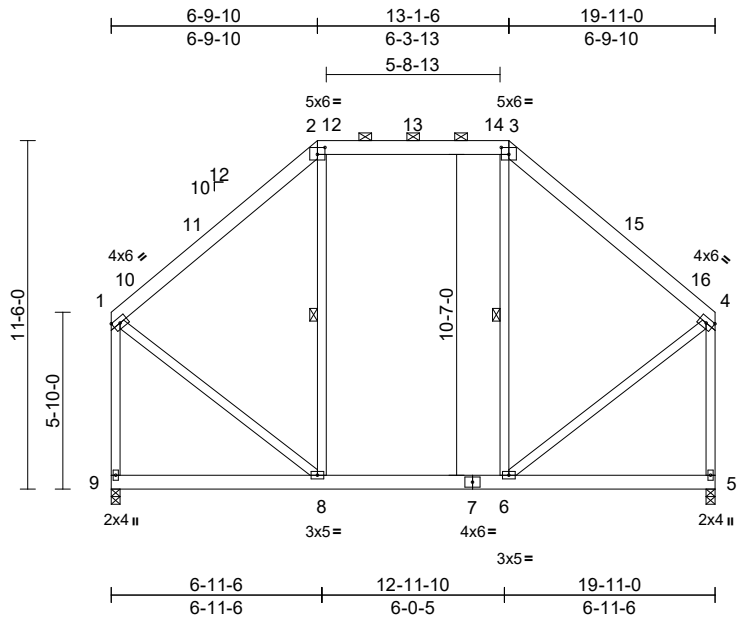

Scale = 1:76

Plate Offsets (X, Y): [2:0-3-0,0-2-12], [3:0-3-0,0-2-12]

Loading	(psf)	Spacing	2-0-0	CSI		DEFL	in	(loc)	l/defl	L/d	PLATES	GRIP
TCLL (roof)	20.0	Plate Grip DOL	1.15	TC	0.86	Vert(LL)	0.12	8-9	>999	240	MT20	244/190
Snow (Pf)	20.0	Lumber DOL	1.15	BC	0.44	Vert(CT)	-0.13	8-9	>999	180		
TCDL	10.0	Rep Stress Incr	YES	WB	0.29	Horz(CT)	0.00	5	n/a	n/a		
BCLL	0.0*	Code	IRC2018/TPI2014	Matrix-MSH		Attic	-0.07	6-8	>992	360		
BCDL	10.0										Weight: 175 lb	FT = 20%

LUMBER
TOP CHORD 2x6 SP No.2
BOT CHORD 2x6 SP No.2
WEBS 2x4 SP No.3 *Except* 8-2,6-3:2x4 SP No.2

BRACING
TOP CHORD Structural wood sheathing directly applied or 6-0-0 oc purlins, except end verticals, and 2-0-0 oc purlins (6-0-0 max.): 2-3.
BOT CHORD Rigid ceiling directly applied or 10-0-0 oc bracing.
WEBS 1 Row at midpt 2-8, 3-6

REACTIONS (size) 5=0-3-8, 9=0-3-8
Max Horiz 9=-318 (LC 10)
Max Grav 5=1156 (LC 45), 9=1156 (LC 45)

FORCES (lb) - Maximum Compression/Maximum Tension
TOP CHORD 1-2=-826/73, 2-3=-543/130, 3-4=-826/73, 1-9=-1113/0, 4-5=-1113/0
BOT CHORD 8-9=-297/288, 6-8=-38/592, 5-6=-69/81
WEBS 2-8=-226/188, 3-6=-226/188, 1-8=-10/726, 4-6=-11/727

NOTES
1) Unbalanced roof live loads have been considered for this design.
2) Wind: ASCE 7-16; Vult=130mph (3-second gust) Vasd=103mph; TCDL=6.0psf; BCDL=6.0psf; h=25ft; Cat. II; Exp B; Enclosed; MWFRS (envelope) exterior zone and C-C Exterior(2E) 0-1-12 to 3-1-12, Exterior (2R) 3-1-12 to 16-9-4, Exterior(2E) 16-9-4 to 19-9-4 zone; cantilever left and right exposed ; end vertical left and right exposed;C-C for members and forces & MWFRS for reactions shown; Lumber DOL=1.60 plate grip DOL=1.60
3) TCLL: ASCE 7-16; Pr=20.0 psf (roof LL: Lum DOL=1.15 Plate DOL=1.15); Pf=20.0 psf (Lum DOL=1.15 Plate DOL=1.15); Is=1.0; Rough Cat B; Fully Exp.; Ce=0.9; Cs=1.00; Ct=1.10
4) Unbalanced snow loads have been considered for this design.
5) Provide adequate drainage to prevent water ponding.
6) This truss has been designed for a 10.0 psf bottom chord live load nonconcurrent with any other live loads.
7) * This truss has been designed for a live load of 20.0psf on the bottom chord in all areas where a rectangle 3-06-00 tall by 2-00-00 wide will fit between the bottom chord and any other members.
8) Ceiling dead load (5.0 psf) on member(s). 2-3; Wall dead load (5.0psf) on member(s).2-8, 3-6
9) Bottom chord live load (40.0 psf) and additional bottom chord dead load (5.0 psf) applied only to room. 6-8
10) This truss is designed in accordance with the 2018 International Residential Code sections R502.11.1 and R802.10.2 and referenced standard ANSI/TPI 1.
11) Graphical purlin representation does not depict the size or the orientation of the purlin along the top and/or bottom chord.
12) Attic room checked for L/360 deflection.

LOAD CASE(S) Standard

October 5,2022

WARNING - Verify design parameters and READ NOTES ON THIS AND INCLUDED MITEK REFERENCE PAGE MII-7473 rev. 5/19/2020 BEFORE USE.
Design valid for use only with MiTek® connectors. This design is based only upon parameters shown, and is for an individual building component, not a truss system. Before use, the building designer must verify the applicability of design parameters and properly incorporate this design into the overall building design. Bracing indicated is to prevent buckling of individual truss web and/or chord members only. Additional temporary and permanent bracing is always required for stability and to prevent collapse with possible personal injury and property damage. For general guidance regarding the fabrication, storage, delivery, erection and bracing of trusses and truss systems, see **ANSI/TPI1 Quality Criteria, DSB-89 and BCSI Building Component Safety Information** available from Truss Plate Institute, 2670 Crain Highway, Suite 203 Waldorf, MD 20601

ENGINEERING BY TRENCO A MiTek Affiliate
818 Soundside Road
Edenton, NC 27932

Job	Truss	Truss Type	Qty	Ply	DRB HOMES - 89 FaNC
22090048	G03	Piggyback Base Supported Gable	1	1	I54559190 Job Reference (optional)

Carter Components (Sanford), Sanford, NC - 27332, Run: 8.53 S Sep 22 2022 Print: 8.530 S Sep 22 2022 MiTek Industries, Inc. Wed Oct 05 09:11:38 Page: 1
ID:mTC1KUi0mrxofaIIau1_zozhpVg-RfC?PsB70Hq3NSgPqnL8w3uITXbGKWrCDoi7J4zJC?f

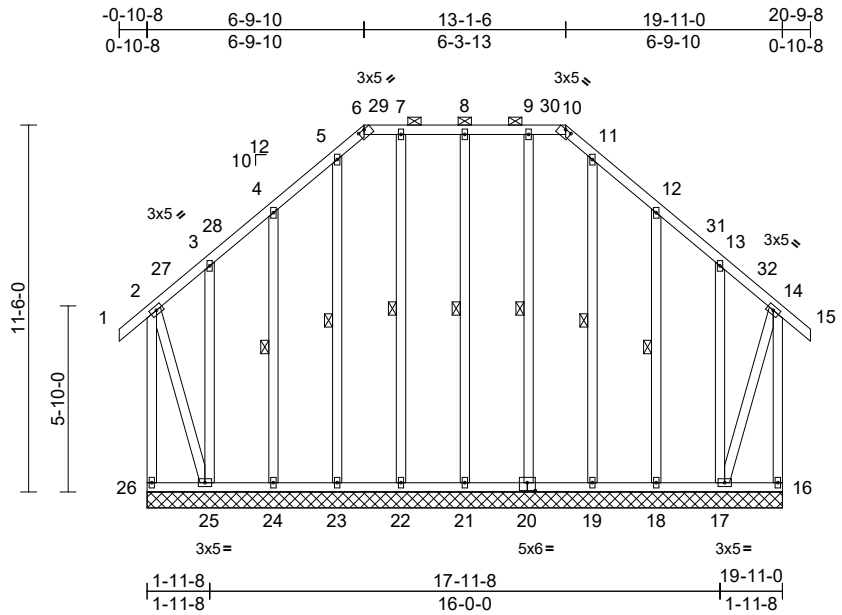

Scale = 1:72.2

Plate Offsets (X, Y): [6:0-2-8,0-0-3], [10:0-2-8,0-0-3], [20:0-3-0,0-3-0]

Loading	(psf)	Spacing	1-11-4	CSI		DEFL	in	(loc)	l/defl	L/d	PLATES	GRIP
TCLL (roof)	20.0	Plate Grip DOL	1.15	TC	0.34	Vert(LL)	n/a	-	n/a	999	MT20	244/190
Snow (Pf)	20.0	Lumber DOL	1.15	BC	0.11	Vert(CT)	n/a	-	n/a	999		
TCDL	10.0	Rep Stress Incr	YES	WB	0.30	Horz(CT)	-0.01	16	n/a	n/a		
BCLL	0.0*	Code	IRC2018/TPI2014	Matrix-MSH								
BCDL	10.0										Weight: 228 lb	FT = 20%

LUMBER

TOP CHORD 2x4 SP No.2
BOT CHORD 2x4 SP No.2
WEBS 2x4 SP No.3
OTHERS 2x4 SP No.2 *Except* 24-4,25-3,18-12,17-13:2x4 SP No.3

BRACING

TOP CHORD Structural wood sheathing directly applied or 6-0-0 oc purlins, except end verticals, and 2-0-0 oc purlins (6-0-0 max.): 6-10.
BOT CHORD Rigid ceiling directly applied or 6-0-0 oc bracing.
WEBS 1 Row at midpt 8-21, 7-22, 5-23, 4-24, 9-20, 11-19, 12-18

REACTIONS (size) 16=19-11-0, 17=19-11-0, 18=19-11-0, 19=19-11-0, 20=19-11-0, 21=19-11-0, 22=19-11-0, 23=19-11-0, 24=19-11-0, 25=19-11-0, 26=19-11-0
Max Horiz 26=-333 (LC 12)
Max Uplift 16=-341 (LC 13), 17=-378 (LC 10), 18=-96 (LC 15), 21=-38 (LC 10), 22=-2 (LC 11), 24=-96 (LC 14), 25=-416 (LC 11), 26=-391 (LC 12)
Max Grav 16=391 (LC 12), 17=514 (LC 50), 18=231 (LC 40), 19=212 (LC 40), 20=218 (LC 39), 21=229 (LC 39), 22=218 (LC 39), 23=212 (LC 40), 24=231 (LC 40), 25=544 (LC 48), 26=442 (LC 13)

FORCES (lb) - Maximum Compression/Maximum Tension

TOP CHORD 2-26=-415/376, 1-2=0/38, 2-3=-100/135, 3-4=-100/158, 4-5=-142/253, 5-6=-128/230, 6-7=-115/231, 7-8=-115/231, 8-9=-115/231, 9-10=-115/231, 10-11=-128/230, 11-12=-142/253, 12-13=-100/158, 13-14=-90/135, 14-15=0/38, 14-16=-366/327
BOT CHORD 25-26=-308/278, 24-25=-193/171, 23-24=-193/171, 22-23=-193/171, 21-22=-193/171, 19-21=-193/171, 18-19=-193/171, 17-18=-193/171, 16-17=-78/87
WEBS 8-21=-191/86, 7-22=-179/26, 5-23=-173/18, 4-24=-198/128, 3-25=-173/97, 9-20=-179/21, 11-19=-173/11, 12-18=-199/128, 13-17=-173/97, 2-25=-442/420, 14-17=-401/380

NOTES

1) Unbalanced roof live loads have been considered for this design.
2) Wind: ASCE 7-16; Vult=130mph (3-second gust) Vasd=103mph; TCDL=6.0psf; BCDL=6.0psf; h=25ft; Cat. II; Exp B; Enclosed; MWFRS (envelope) exterior zone and C-C Exterior(2E) -0-10-8 to 1-11-8, Interior (1) 1-11-8 to 2-6-11, Exterior(2R) 2-6-11 to 17-4-5, Interior (1) 17-4-5 to 17-9-8, Exterior(2E) 17-9-8 to 20-9-8 zone; cantilever left and right exposed ; end vertical left and right exposed;C-C for members and forces & MWFRS for reactions shown; Lumber DOL=1.60 plate grip DOL=1.60
3) Truss designed for wind loads in the plane of the truss only. For studs exposed to wind (normal to the face), see Standard Industry Gable End Details as applicable, or consult qualified building designer as per ANSI/TPI 1.
4) TCLL: ASCE 7-16; Pr=20.0 psf (roof LL: Lum DOL=1.15 Plate DOL=1.15); Pf=20.0 psf (Lum DOL=1.15 Plate DOL=1.15); Is=1.0; Rough Cat B; Fully Exp.; Ce=0.9; Cs=1.00; Ct=1.10
5) Unbalanced snow loads have been considered for this design.
6) This truss has been designed for greater of min roof live load of 12.0 psf or 1.00 times flat roof load of 20.0 psf on overhangs non-concurrent with other live loads.
7) Provide adequate drainage to prevent water ponding.
8) All plates are 2x4 MT20 unless otherwise indicated.
9) Gable requires continuous bottom chord bearing.
10) Truss to be fully sheathed from one face or securely braced against lateral movement (i.e. diagonal web).
11) Gable studs spaced at 2-0-0 oc.
12) This truss has been designed for a 10.0 psf bottom chord live load nonconcurrent with any other live loads.
13) * This truss has been designed for a live load of 20.0psf on the bottom chord in all areas where a rectangle 3-06-00 tall by 2-00-00 wide will fit between the bottom chord and any other members.

October 5,2022

Continued on page 2

WARNING - Verify design parameters and READ NOTES ON THIS AND INCLUDED MITEK REFERENCE PAGE MII-7473 rev. 5/19/2020 BEFORE USE.
Design valid for use only with MiTek® connectors. This design is based only upon parameters shown, and is for an individual building component, not a truss system. Before use, the building designer must verify the applicability of design parameters and properly incorporate this design into the overall building design. Bracing indicated is to prevent buckling of individual truss web and/or chord members only. Additional temporary and permanent bracing is always required for stability and to prevent collapse with possible personal injury and property damage. For general guidance regarding the fabrication, storage, delivery, erection and bracing of trusses and truss systems, see **ANSI/TPI1 Quality Criteria, DSB-89 and BCSI Building Component Safety Information** available from Truss Plate Institute, 2670 Crain Highway, Suite 203 Waldorf, MD 20601

ENGINEERING BY TRENCO A MiTek Affiliate
818 Soundside Road
Edenton, NC 27932

14) Provide mechanical connection (by others) of truss to bearing plate capable of withstanding 391 lb uplift at joint 26, 341 lb uplift at joint 16, 38 lb uplift at joint 21, 2 lb uplift at joint 22, 96 lb uplift at joint 24, 96 lb uplift at joint 18, 416 lb uplift at joint 25 and 378 lb uplift at joint 17.
15) This truss is designed in accordance with the 2018 International Residential Code sections R502.11.1 and R802.10.2 and referenced standard ANSI/TPI 1.
16) Graphical purlin representation does not depict the size or the orientation of the purlin along the top and/or bottom chord.
17) Attic room checked for L/360 deflection.

LOAD CASE(S) Standard

WARNING - Verify design parameters and READ NOTES ON THIS AND INCLUDED MITEK REFERENCE PAGE MII-7473 rev. 5/19/2020 BEFORE USE.
Design valid for use only with MiTek® connectors. This design is based only upon parameters shown, and is for an individual building component, not a truss system. Before use, the building designer must verify the applicability of design parameters and properly incorporate this design into the overall building design. Bracing indicated is to prevent buckling of individual truss web and/or chord members only. Additional temporary and permanent bracing is always required for stability and to prevent collapse with possible personal injury and property damage. For general guidance regarding the fabrication, storage, delivery, erection and bracing of trusses and truss systems, see **ANSI/TPI1 Quality Criteria, DSB-89 and BCSI Building Component Safety Information** available from Truss Plate Institute, 2670 Crain Highway, Suite 203 Waldorf, MD 20601

ENGINEERING BY TRENCO A MiTek Affiliate
818 Soundside Road
Edenton, NC 27932

Job	Truss	Truss Type	Qty	Ply	DRB HOMES - 89 FaNC
22090048	J01	Monopitch	3	1	I54559191 Job Reference (optional)

Carter Components (Sanford), Sanford, NC - 27332,

Run: 8.53 S Sep 22 2022 Print: 8.530 S Sep 22 2022 MiTek Industries, Inc. Wed Oct 05 09:11:38 Page: 1
ID:UxC8s1x5IH5xuuOcBwY_cFzFn_8-RfC?PsB70Hq3NSgPqnL8w3uITXbGKWrCDoi7J4zJC?f

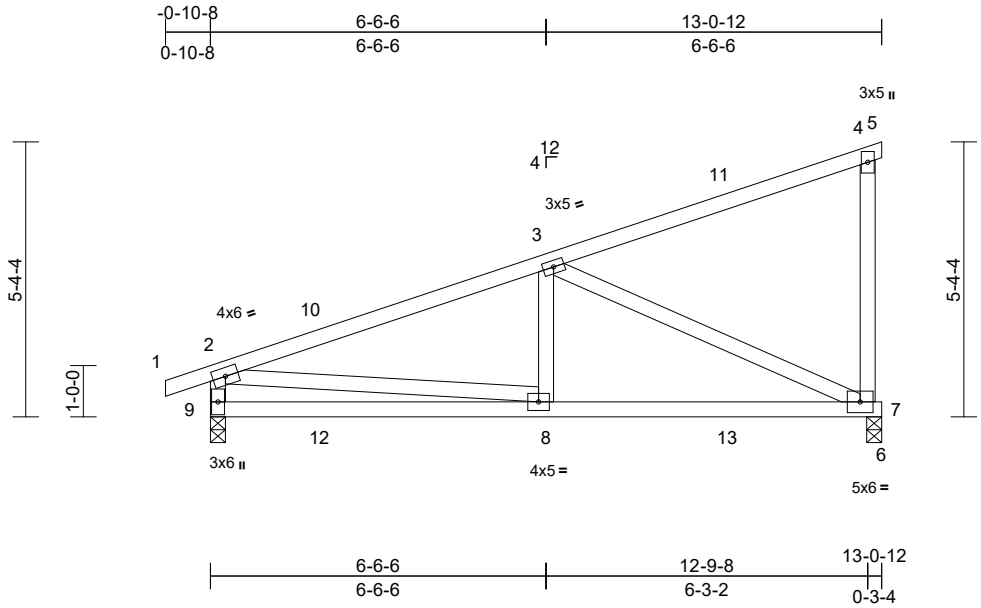

Scale = 1:44.8

Loading	(psf)	Spacing	2-0-0	CSI		DEFL	in	(loc)	l/defl	L/d	PLATES	GRIP
TCLL (roof)	20.0	Plate Grip DOL	1.15	TC	0.66	Vert(LL)	0.10	7-8	>999	240	MT20	244/190
Snow (Pf)	20.0	Lumber DOL	1.15	BC	0.42	Vert(CT)	0.08	7-8	>999	180		
TCDL	10.0	Rep Stress Incr	YES	WB	0.73	Horz(CT)	0.01	7	n/a	n/a		
BCLL	0.0*	Code	IRC2018/TPI2014	Matrix-MSH								
BCDL	10.0										Weight: 72 lb	FT = 20%

LUMBER
TOP CHORD 2x4 SP No.2
BOT CHORD 2x4 SP No.2
WEBS 2x4 SP No.3

BRACING
TOP CHORD Structural wood sheathing directly applied or 5-11-2 oc purlins, except end verticals.
BOT CHORD Rigid ceiling directly applied or 6-7-1 oc bracing.

REACTIONS (size) 7=0-3-8, 9=0-3-8
Max Horiz 9=203 (LC 11)
Max Uplift 7=-209 (LC 10), 9=-212 (LC 10)
Max Grav 7=670 (LC 21), 9=614 (LC 21)

FORCES (lb) - Maximum Compression/Maximum Tension
TOP CHORD 1-2=0/19, 2-3=-867/750, 3-4=-134/75, 4-5=-8/0, 4-7=-266/109, 2-9=-553/473
BOT CHORD 8-9=-320/242, 7-8=-687/772, 6-7=0/0
WEBS 3-8=-336/246, 3-7=-810/811, 2-8=-369/558

NOTES
1) Wind: ASCE 7-16; Vult=130mph (3-second gust) Vasd=103mph; TCDL=6.0psf; BCDL=6.0psf; h=25ft; Cat. II; Exp B; Enclosed; MWFRS (envelope) exterior zone and C-C Exterior(2E) -0-10-8 to 2-1-8, Interior (1) 2-1-8 to 10-0-12, Exterior(2E) 10-0-12 to 13-0-12 zone; cantilever left and right exposed ; end vertical left and right exposed; porch left and right exposed;C-C for members and forces & MWFRS for reactions shown; Lumber DOL=1.60 plate grip DOL=1.60
2) TCLL: ASCE 7-16; Pr=20.0 psf (roof LL: Lum DOL=1.15 Plate DOL=1.15); Pf=20.0 psf (Lum DOL=1.15 Plate DOL=1.15); Is=1.0; Rough Cat B; Fully Exp.; Ce=0.9; Cs=1.00; Ct=1.10
3) Unbalanced snow loads have been considered for this design.
4) This truss has been designed for greater of min roof live load of 12.0 psf or 1.00 times flat roof load of 20.0 psf on overhangs non-concurrent with other live loads.
5) This truss has been designed for a 10.0 psf bottom chord live load nonconcurrent with any other live loads.
6) * This truss has been designed for a live load of 20.0psf on the bottom chord in all areas where a rectangle 3-06-00 tall by 2-00-00 wide will fit between the bottom chord and any other members.
7) One H2.5A Simpson Strong-Tie connectors recommended to connect truss to bearing walls due to UPLIFT at jt(s) 9 and 7. This connection is for uplift only and does not consider lateral forces.
8) This truss is designed in accordance with the 2018 International Residential Code sections R502.11.1 and R802.10.2 and referenced standard ANSI/TPI 1.

LOAD CASE(S) Standard

October 5,2022

WARNING - Verify design parameters and READ NOTES ON THIS AND INCLUDED MITEK REFERENCE PAGE MII-7473 rev. 5/19/2020 BEFORE USE.
Design valid for use only with MiTek® connectors. This design is based only upon parameters shown, and is for an individual building component, not a truss system. Before use, the building designer must verify the applicability of design parameters and properly incorporate this design into the overall building design. Bracing indicated is to prevent buckling of individual truss web and/or chord members only. Additional temporary and permanent bracing is always required for stability and to prevent collapse with possible personal injury and property damage. For general guidance regarding the fabrication, storage, delivery, erection and bracing of trusses and truss systems, see **ANSI/TPI1 Quality Criteria, DSB-89 and BCSI Building Component Safety Information** available from Truss Plate Institute, 2670 Crain Highway, Suite 203 Waldorf, MD 20601

ENGINEERING BY TRENCO A MiTek Affiliate
818 Soundside Road
Edenton, NC 27932

Job	Truss	Truss Type	Qty	Ply	DRB HOMES - 89 FaNC
22090048	J02	Monopitch Supported Gable	1	1	I54559192 Job Reference (optional)

Carter Components (Sanford), Sanford, NC - 27332,

Run: 8.53 S Sep 22 2022 Print: 8.530 S Sep 22 2022 MiTek Industries, Inc. Wed Oct 05 09:11:39 Page: 1
ID:Y58EZzK9l67Ojpql3e6Uv_zFmze-RfC?PsB70Hq3NSgPqnL8w3uITXbGKWrCDoi7J4zJC?f

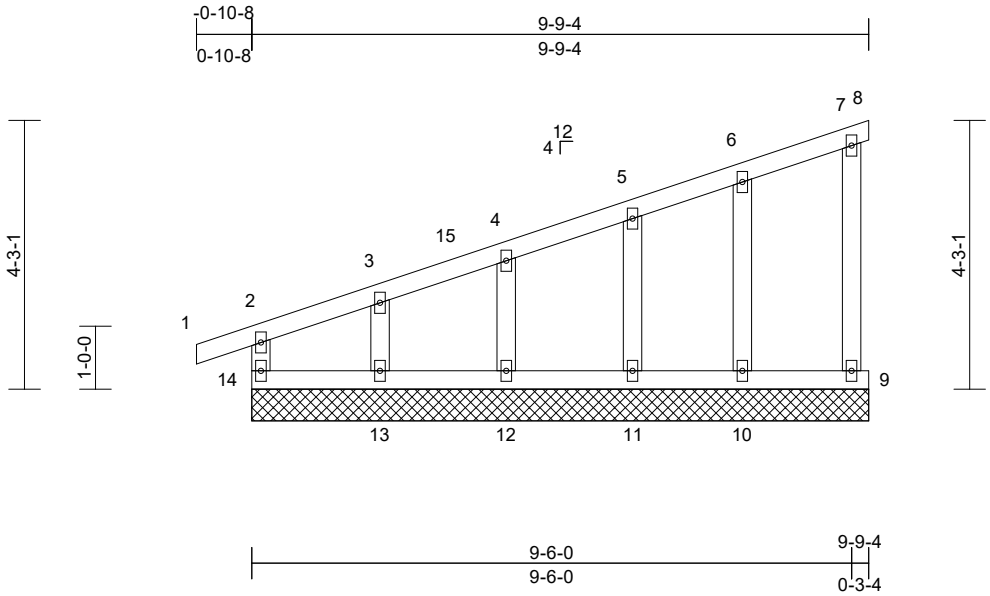

Scale = 1:36.5

Loading	(psf)	Spacing	2-0-0	CSI		DEFL	in	(loc)	l/defl	L/d	PLATES	GRIP
TCLL (roof)	20.0	Plate Grip DOL	1.15	TC	0.25	Vert(LL)	n/a	-	n/a	999	MT20	244/190
Snow (Pf)	20.0	Lumber DOL	1.15	BC	0.11	Vert(CT)	n/a	-	n/a	999		
TCDL	10.0	Rep Stress Incr	YES	WB	0.05	Horz(CT)	-0.01	8	n/a	n/a		
BCLL	0.0*	Code	IRC2018/TPI2014	Matrix-MR								
BCDL	10.0										Weight: 50 lb	FT = 20%

LUMBER

TOP CHORD 2x4 SP No.2
BOT CHORD 2x4 SP No.2
WEBS 2x4 SP No.3
OTHERS 2x4 SP No.3

BRACING

TOP CHORD Structural wood sheathing directly applied or 6-0-0 oc purlins, except end verticals.
BOT CHORD Rigid ceiling directly applied or 10-0-0 oc bracing.

REACTIONS (size) 8=9-9-4, 9=9-9-4, 10=9-9-4, 11=9-9-4, 12=9-9-4, 13=9-9-4, 14=9-9-4
Max Horiz 14=159 (LC 11)
Max Uplift 8=-32 (LC 10), 9=-33 (LC 11), 10=-28 (LC 10), 11=-35 (LC 14), 12=-24 (LC 10), 13=-80 (LC 14)
Max Grav 8=26 (LC 13), 9=102 (LC 21), 10=201 (LC 21), 11=203 (LC 21), 12=216 (LC 21), 13=149 (LC 21), 14=154 (LC 25)

FORCES (lb) - Maximum Compression/Maximum Tension
TOP CHORD 2-14=-124/58, 1-2=0/19, 2-3=-145/22, 3-4=-90/25, 4-5=-83/26, 5-6=-72/23, 6-7=-64/62, 7-8=-23/14, 7-9=-88/32
BOT CHORD 13-14=-59/73, 12-13=-59/73, 11-12=-59/73, 10-11=-59/73, 9-10=-59/73
WEBS 4-12=-175/127, 3-13=-109/181, 5-11=-166/134, 6-10=-163/104

NOTES

1) Wind: ASCE 7-16; Vult=130mph (3-second gust) Vasd=103mph; TCDL=6.0psf; BCDL=6.0psf; h=25ft; Cat. II; Exp B; Enclosed; MWFRS (envelope) exterior zone and C-C Corner(3E) -0-10-8 to 2-0-6, Exterior(2N) 2-0-6 to 9-9-4 zone; cantilever left and right exposed ; end vertical left and right exposed;C-C for members and forces & MWFRS for reactions shown; Lumber DOL=1.60 plate grip DOL=1.60
2) Truss designed for wind loads in the plane of the truss only. For studs exposed to wind (normal to the face), see Standard Industry Gable End Details as applicable, or consult qualified building designer as per ANSI/TPI 1.
3) TCLL: ASCE 7-16; Pr=20.0 psf (roof LL: Lum DOL=1.15 Plate DOL=1.15); Pf=20.0 psf (Lum DOL=1.15 Plate DOL=1.15); Is=1.0; Rough Cat B; Fully Exp.; Ce=0.9; Cs=1.00; Ct=1.10
4) Unbalanced snow loads have been considered for this design.
5) This truss has been designed for greater of min roof live load of 12.0 psf or 1.00 times flat roof load of 20.0 psf on overhangs non-concurrent with other live loads.
6) All plates are 2x4 MT20 unless otherwise indicated.
7) Gable requires continuous bottom chord bearing.
8) Truss to be fully sheathed from one face or securely braced against lateral movement (i.e. diagonal web).
9) Gable studs spaced at 2-0-0 oc.
10) This truss has been designed for a 10.0 psf bottom chord live load nonconcurrent with any other live loads.
11) * This truss has been designed for a live load of 20.0psf on the bottom chord in all areas where a rectangle 3-06-00 tall by 2-00-00 wide will fit between the bottom chord and any other members.
12) Provide mechanical connection (by others) of truss to bearing plate capable of withstanding 32 lb uplift at joint 8, 33 lb uplift at joint 9, 24 lb uplift at joint 12, 80 lb uplift at joint 13, 35 lb uplift at joint 11 and 28 lb uplift at joint 10.
13) This truss is designed in accordance with the 2018 International Residential Code sections R502.11.1 and R802.10.2 and referenced standard ANSI/TPI 1.

LOAD CASE(S) Standard

October 5,2022

WARNING - Verify design parameters and READ NOTES ON THIS AND INCLUDED MITEK REFERENCE PAGE MII-7473 rev. 5/19/2020 BEFORE USE.
Design valid for use only with MiTek® connectors. This design is based only upon parameters shown, and is for an individual building component, not a truss system. Before use, the building designer must verify the applicability of design parameters and properly incorporate this design into the overall building design. Bracing indicated is to prevent buckling of individual truss web and/or chord members only. Additional temporary and permanent bracing is always required for stability and to prevent collapse with possible personal injury and property damage. For general guidance regarding the fabrication, storage, delivery, erection and bracing of trusses and truss systems, see **ANSI/TPI1 Quality Criteria, DSB-89 and BCSI Building Component Safety Information** available from Truss Plate Institute, 2670 Crain Highway, Suite 203 Waldorf, MD 20601

ENGINEERING BY TRENCO A MiTek Affiliate
818 Soundside Road
Edenton, NC 27932

Job	Truss	Truss Type	Qty	Ply	DRB HOMES - 89 FaNC
22090048	J03	Monopitch	7	1	I54559193 Job Reference (optional)

Carter Components (Sanford), Sanford, NC - 27332,

Run: 8.53 S Sep 22 2022 Print: 8.530 S Sep 22 2022 MiTek Industries, Inc. Wed Oct 05 09:11:39 Page: 1
ID:4A6HwRWC_187eG3q??PEYMzFmzO-RfC?PsB70Hq3NSgPqnL8w3uITXbGKWrCDoi7J4zJC?f

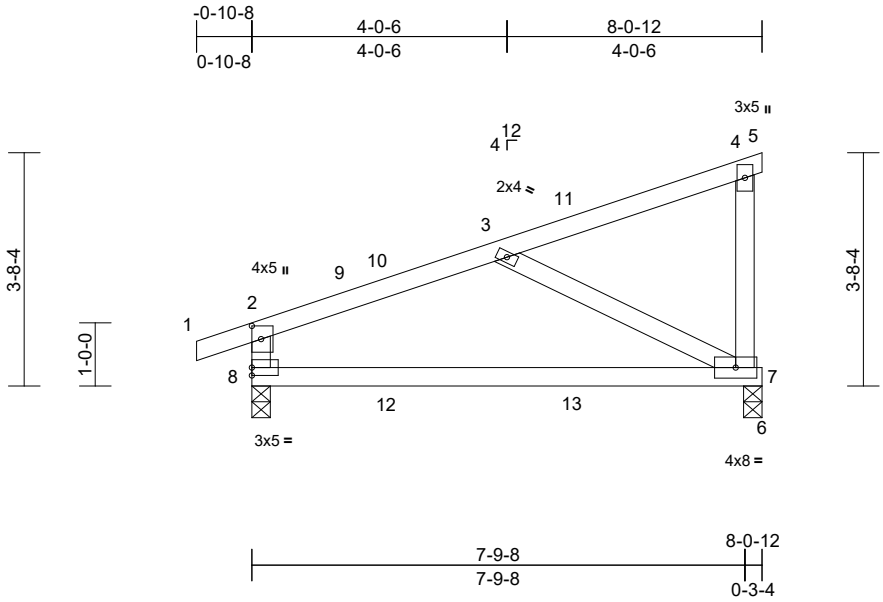

Scale = 1:36.4

Plate Offsets (X, Y): [2:0-2-8,0-1-12]

Loading	(psf)	Spacing	2-0-0	CSI		DEFL	in	(loc)	l/defl	L/d	PLATES	GRIP
TCLL (roof)	20.0	Plate Grip DOL	1.15	TC	0.76	Vert(LL)	0.28	7-8	>328	240	MT20	244/190
Snow (Pf)	20.0	Lumber DOL	1.15	BC	0.62	Vert(CT)	0.22	7-8	>416	180		
TCDL	10.0	Rep Stress Incr	YES	WB	0.15	Horz(CT)	0.00	7	n/a	n/a		
BCLL	0.0*	Code	IRC2018/TPI2014	Matrix-MSH								
BCDL	10.0										Weight: 38 lb	FT = 20%

LUMBER
TOP CHORD 2x4 SP No.2
BOT CHORD 2x4 SP No.2
WEBS 2x4 SP No.3

BRACING
TOP CHORD Structural wood sheathing directly applied or 6-0-0 oc purlins, except end verticals.
BOT CHORD Rigid ceiling directly applied or 7-4-7 oc bracing.

REACTIONS (size) 7=0-3-8, 8=0-3-8
Max Horiz 8=136 (LC 11)
Max Uplift 7=-128 (LC 10), 8=-142 (LC 10)
Max Grav 7=439 (LC 21), 8=445 (LC 21)

FORCES (lb) - Maximum Compression/Maximum Tension
TOP CHORD 1-2=0/19, 2-3=-451/337, 3-4=-97/118, 4-5=-8/0, 4-7=-193/79, 2-8=-362/275
BOT CHORD 7-8=-330/375, 6-7=0/0
WEBS 3-7=-379/331

NOTES
1) Wind: ASCE 7-16; Vult=130mph (3-second gust) Vasd=103mph; TCDL=6.0psf; BCDL=6.0psf; h=25ft; Cat. II; Exp B; Enclosed; MWFRS (envelope) exterior zone and C-C Exterior(2E) -0-10-8 to 2-1-8, Interior (1) 2-1-8 to 5-0-12, Exterior(2E) 5-0-12 to 8-0-12 zone; cantilever left and right exposed ; end vertical left and right exposed; porch left and right exposed;C-C for members and forces & MWFRS for reactions shown; Lumber DOL=1.60 plate grip DOL=1.60
2) TCLL: ASCE 7-16; Pr=20.0 psf (roof LL: Lum DOL=1.15 Plate DOL=1.15); Pf=20.0 psf (Lum DOL=1.15 Plate DOL=1.15); Is=1.0; Rough Cat B; Fully Exp.; Ce=0.9; Cs=1.00; Ct=1.10
3) Unbalanced snow loads have been considered for this design.
4) This truss has been designed for greater of min roof live load of 12.0 psf or 1.00 times flat roof load of 20.0 psf on overhangs non-concurrent with other live loads.
5) This truss has been designed for a 10.0 psf bottom chord live load nonconcurrent with any other live loads.
6) * This truss has been designed for a live load of 20.0psf on the bottom chord in all areas where a rectangle 3-06-00 tall by 2-00-00 wide will fit between the bottom chord and any other members.
7) One H2.5A Simpson Strong-Tie connectors recommended to connect truss to bearing walls due to UPLIFT at jt(s) 8 and 7. This connection is for uplift only and does not consider lateral forces.
8) This truss is designed in accordance with the 2018 International Residential Code sections R502.11.1 and R802.10.2 and referenced standard ANSI/TPI 1.

LOAD CASE(S) Standard

October 5,2022

WARNING - Verify design parameters and READ NOTES ON THIS AND INCLUDED MITEK REFERENCE PAGE MII-7473 rev. 5/19/2020 BEFORE USE.
Design valid for use only with MiTek® connectors. This design is based only upon parameters shown, and is for an individual building component, not a truss system. Before use, the building designer must verify the applicability of design parameters and properly incorporate this design into the overall building design. Bracing indicated is to prevent buckling of individual truss web and/or chord members only. Additional temporary and permanent bracing is always required for stability and to prevent collapse with possible personal injury and property damage. For general guidance regarding the fabrication, storage, delivery, erection and bracing of trusses and truss systems, see **ANSI/TPI1 Quality Criteria, DSB-89 and BCSI Building Component Safety Information** available from Truss Plate Institute, 2670 Crain Highway, Suite 203 Waldorf, MD 20601

ENGINEERING BY TRENCO A MiTek Affiliate
818 Soundside Road
Edenton, NC 27932

Job	Truss	Truss Type	Qty	Ply	DRB HOMES - 89 FaNC
22090048	J04	Monopitch Supported Gable	1	1	I54559194 Job Reference (optional)

Carter Components (Sanford), Sanford, NC - 27332,

Run: 8.53 S Sep 22 2022 Print: 8.530 S Sep 22 2022 MiTek Industries, Inc. Wed Oct 05 09:11:39 Page: 1
ID:R8vAz9aKpZnPl2xonY_PFQzFmzJ-RfC?PsB70Hq3NSgPqnL8w3uITXbGKWrCDoi7J4zJC?f

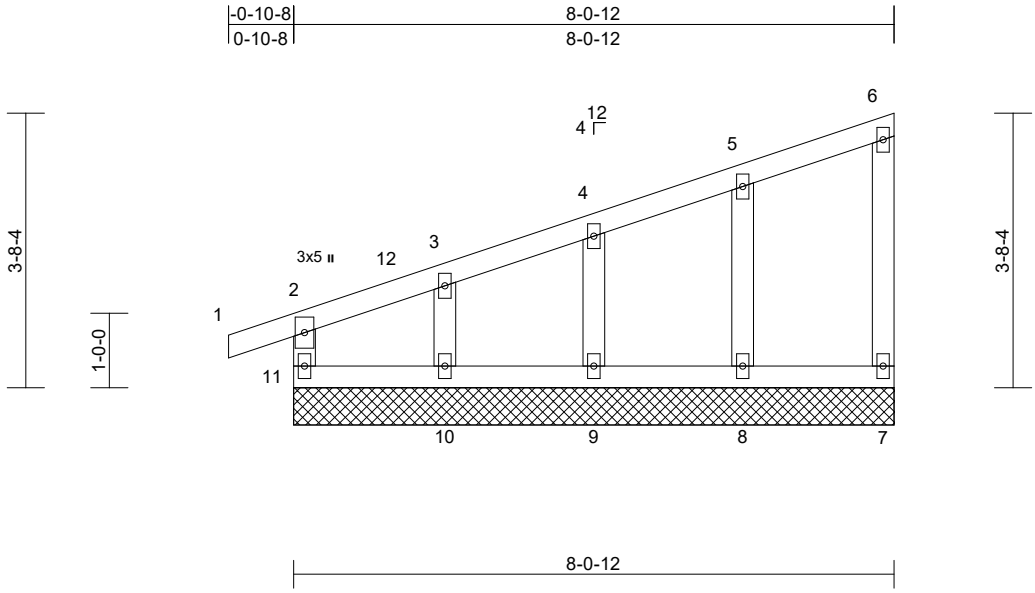

Scale = 1:30.9

Loading	(psf)	Spacing	1-11-4	CSI		DEFL	in	(loc)	l/defl	L/d	PLATES	GRIP
TCLL (roof)	20.0	Plate Grip DOL	1.15	TC	0.30	Vert(LL)	n/a	-	n/a	999	MT20	244/190
Snow (Pf)	20.0	Lumber DOL	1.15	BC	0.12	Vert(CT)	n/a	-	n/a	999		
TCDL	10.0	Rep Stress Incr	YES	WB	0.06	Horz(CT)	n/a	-	n/a	n/a		
BCLL	0.0*	Code	IRC2018/TPI2014	Matrix-MSH								
BCDL	10.0										Weight: 39 lb	FT = 20%

LUMBER

TOP CHORD 2x4 SP No.2
BOT CHORD 2x4 SP No.2
WEBS 2x4 SP No.3
OTHERS 2x4 SP No.3

BRACING

TOP CHORD Structural wood sheathing directly applied or 6-0-0 oc purlins, except end verticals.
BOT CHORD Rigid ceiling directly applied or 10-0-0 oc bracing.

REACTIONS (size) 7=8-0-12, 8=8-0-12, 9=8-0-12, 10=8-0-12, 11=8-0-12
Max Horiz 11=97 (LC 10)
Max Uplift 7=-12 (LC 10), 8=-38 (LC 14), 9=-20 (LC 10), 10=-86 (LC 14)
Max Grav 7=79 (LC 21), 8=228 (LC 21), 9=212 (LC 21), 10=190 (LC 21), 11=136 (LC 1)

FORCES (lb) - Maximum Compression/Maximum Tension
TOP CHORD 2-11=-120/37, 1-2=0/19, 2-3=-204/64, 3-4=-132/41, 4-5=-83/28, 5-6=-31/15
BOT CHORD 10-11=0/0, 9-10=0/0, 8-9=0/0, 7-8=0/0
WEBS 4-9=-174/130, 3-10=-151/211, 5-8=-186/163, 6-7=-64/54

NOTES

1) Unbalanced roof live loads have been considered for this design.
2) Wind: ASCE 7-16; Vult=130mph (3-second gust) Vasd=103mph; TCDL=6.0psf; BCDL=6.0psf; h=25ft; Cat. II; Exp B; Enclosed; MWFRS (envelope) exterior zone and C-C Corner(3E) -0-10-8 to 2-0-6, Exterior(2N) 2-0-6 to 4-11-0, Corner(3E) 4-11-0 to 7-11-0 zone; cantilever left and right exposed ; end vertical left and right exposed;C-C for members and forces & MWFRS for reactions shown; Lumber DOL=1.60 plate grip DOL=1.60
3) Truss designed for wind loads in the plane of the truss only. For studs exposed to wind (normal to the face), see Standard Industry Gable End Details as applicable, or consult qualified building designer as per ANSI/TPI 1.
4) TCLL: ASCE 7-16; Pr=20.0 psf (roof LL: Lum DOL=1.15 Plate DOL=1.15); Pf=20.0 psf (Lum DOL=1.15 Plate DOL=1.15); Is=1.0; Rough Cat B; Fully Exp.; Ce=0.9; Cs=1.00; Ct=1.10
5) Unbalanced snow loads have been considered for this design.
6) This truss has been designed for greater of min roof live load of 12.0 psf or 1.00 times flat roof load of 20.0 psf on overhangs non-concurrent with other live loads.
7) All plates are 2x4 MT20 unless otherwise indicated.
8) Gable requires continuous bottom chord bearing.
9) Truss to be fully sheathed from one face or securely braced against lateral movement (i.e. diagonal web).
10) Gable studs spaced at 2-0-0 oc.
11) This truss has been designed for a 10.0 psf bottom chord live load nonconcurrent with any other live loads.
12) * This truss has been designed for a live load of 20.0psf on the bottom chord in all areas where a rectangle 3-06-00 tall by 2-00-00 wide will fit between the bottom chord and any other members.
13) Provide mechanical connection (by others) of truss to bearing plate capable of withstanding 12 lb uplift at joint 7, 20 lb uplift at joint 9, 86 lb uplift at joint 10 and 38 lb uplift at joint 8.
14) This truss is designed in accordance with the 2018 International Residential Code sections R502.11.1 and R802.10.2 and referenced standard ANSI/TPI 1.

LOAD CASE(S) Standard

October 5,2022

WARNING - Verify design parameters and READ NOTES ON THIS AND INCLUDED MITEK REFERENCE PAGE MII-7473 rev. 5/19/2020 BEFORE USE.
Design valid for use only with MiTek® connectors. This design is based only upon parameters shown, and is for an individual building component, not a truss system. Before use, the building designer must verify the applicability of design parameters and properly incorporate this design into the overall building design. Bracing indicated is to prevent buckling of individual truss web and/or chord members only. Additional temporary and permanent bracing is always required for stability and to prevent collapse with possible personal injury and property damage. For general guidance regarding the fabrication, storage, delivery, erection and bracing of trusses and truss systems, see **ANSI/TPI1 Quality Criteria, DSB-89 and BCSI Building Component Safety Information** available from Truss Plate Institute, 2670 Crain Highway, Suite 203 Waldorf, MD 20601

ENGINEERING BY TRENCO A MiTek Affiliate
818 Soundside Road
Edenton, NC 27932

Job	Truss	Truss Type	Qty	Ply	DRB HOMES - 89 FaNC
22090048	PB1	Piggyback	10	1	I54559195 Job Reference (optional)

Carter Components (Sanford), Sanford, NC - 27332,

Run: 8.53 S Sep 22 2022 Print: 8.530 S Sep 22 2022 MiTek Industries, Inc. Wed Oct 05 09:11:39 Page: 1
ID:UWNIgCZass9xdfRGAgasccZFn54-RfC?PsB70Hq3NSgPqnL8w3uITXbGKWrCDoi7J4zJC?f

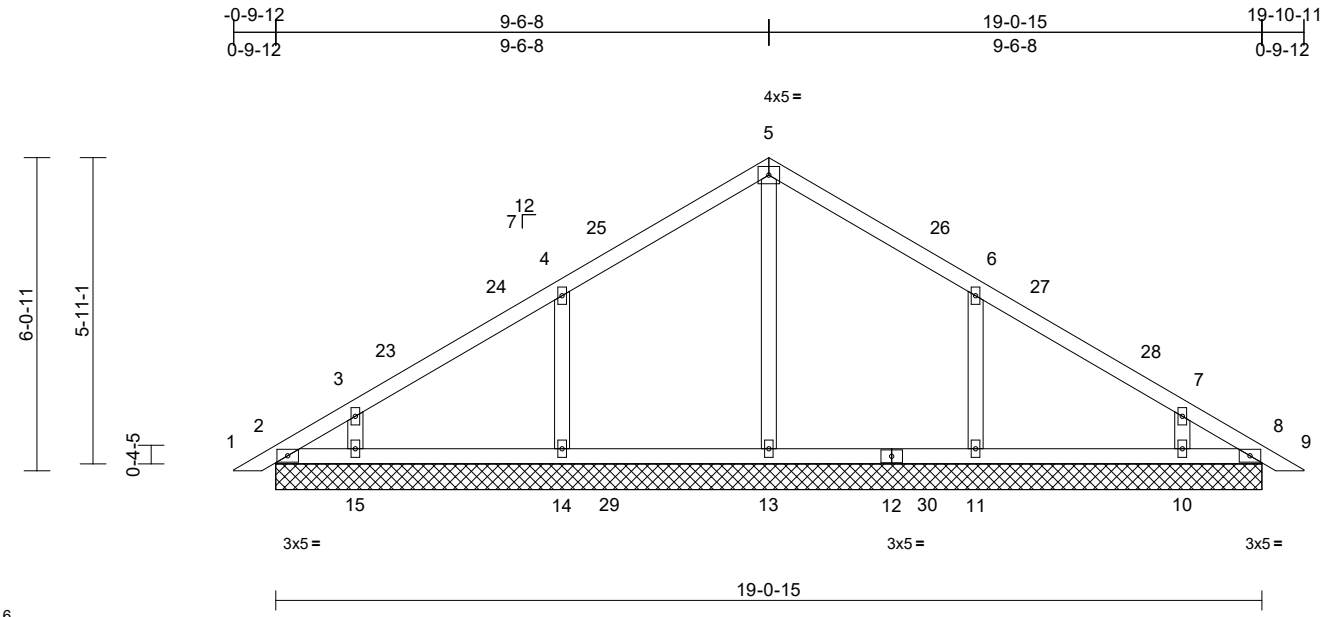

Scale = 1:44.6

Loading	(psf)	Spacing	2-0-0	CSI		DEFL	in	(loc)	l/defl	L/d	PLATES	GRIP
TCLL (roof)	20.0	Plate Grip DOL	1.15	TC	0.30	Vert(LL)	n/a	-	n/a	999	MT20	244/190
Snow (Pf)	20.0	Lumber DOL	1.15	BC	0.17	Vert(CT)	n/a	-	n/a	999		
TCDL	10.0	Rep Stress Incr	YES	WB	0.13	Horz(CT)	0.00	19	n/a	n/a		
BCLL	0.0*	Code	IRC2018/TPI2014	Matrix-MSH								
BCDL	10.0										Weight: 83 lb	FT = 20%

LUMBER
TOP CHORD 2x4 SP No.2
BOT CHORD 2x4 SP No.2
OTHERS 2x4 SP No.3

BRACING
TOP CHORD Structural wood sheathing directly applied or 6-0-0 oc purlins.
BOT CHORD Rigid ceiling directly applied or 10-0-0 oc bracing.

REACTIONS (size) 2=19-0-15, 8=19-0-15, 10=19-0-15, 11=19-0-15, 13=19-0-15, 14=19-0-15, 15=19-0-15, 16=19-0-15, 19=19-0-15
Max Horiz 2=138 (LC 13), 16=138 (LC 13)
Max Uplift 2=-36 (LC 10), 8=-9 (LC 11), 10=-79 (LC 15), 11=-115 (LC 15), 14=-116 (LC 14), 15=-80 (LC 14), 16=-36 (LC 10), 19=-9 (LC 11)
Max Grav 2=89 (LC 25), 8=75 (LC 22), 10=310 (LC 25), 11=479 (LC 6), 13=374 (LC 24), 14=479 (LC 5), 15=311 (LC 24), 16=89 (LC 25), 19=75 (LC 22)

FORCES (lb) - Maximum Compression/Maximum Tension
TOP CHORD 1-2=0/16, 2-3=-127/108, 3-4=-130/87, 4-5=-147/128, 5-6=-147/111, 6-7=-90/52, 7-8=-91/55, 8-9=0/16
BOT CHORD 2-15=-39/90, 14-15=-39/90, 13-14=-39/90, 11-13=-39/90, 10-11=-39/90, 8-10=-39/90
WEBS 5-13=-203/0, 4-14=-395/165, 3-15=-206/129, 6-11=-395/164, 7-10=-206/128

NOTES
1) Unbalanced roof live loads have been considered for this design.
2) Wind: ASCE 7-16; Vult=130mph (3-second gust) Vasd=103mph; TCDL=6.0psf; BCDL=6.0psf; h=25ft; Cat. II; Exp B; Enclosed; MWFRS (envelope) exterior zone and C-C Exterior(2E) 0-3-11 to 3-3-11, Interior (1) 3-3-11 to 7-4-10, Exterior(2R) 7-4-10 to 13-4-10, Interior (1) 13-4-10 to 17-5-10, Exterior(2E) 17-5-10 to 20-5-10 zone; cantilever left and right exposed ; end vertical left and right exposed;C-C for members and forces & MWFRS for reactions shown; Lumber DOL=1.60 plate grip DOL=1.60
3) Truss designed for wind loads in the plane of the truss only. For studs exposed to wind (normal to the face), see Standard Industry Gable End Details as applicable, or consult qualified building designer as per ANSI/TPI 1.
4) TCLL: ASCE 7-16; Pr=20.0 psf (roof LL: Lum DOL=1.15 Plate DOL=1.15); Pf=20.0 psf (Lum DOL=1.15 Plate DOL=1.15); Is=1.0; Rough Cat B; Fully Exp.; Ce=0.9; Cs=1.00; Ct=1.10
5) Unbalanced snow loads have been considered for this design.
6) This truss has been designed for greater of min roof live load of 12.0 psf or 1.00 times flat roof load of 20.0 psf on overhangs non-concurrent with other live loads.
7) All plates are 2x4 MT20 unless otherwise indicated.
8) Gable requires continuous bottom chord bearing.
9) Gable studs spaced at 4-0-0 oc.
10) This truss has been designed for a 10.0 psf bottom chord live load nonconcurrent with any other live loads.
11) * This truss has been designed for a live load of 20.0psf on the bottom chord in all areas where a rectangle 3-06-00 tall by 2-00-00 wide will fit between the bottom chord and any other members, with BCDL = 10.0psf.
12) N/A
13) This truss is designed in accordance with the 2018 International Residential Code sections R502.11.1 and R802.10.2 and referenced standard ANSI/TPI 1.
14) See Standard Industry Piggyback Truss Connection Detail for Connection to base truss as applicable, or consult qualified building designer.

LOAD CASE(S) Standard

October 5,2022

WARNING - Verify design parameters and READ NOTES ON THIS AND INCLUDED MITEK REFERENCE PAGE MII-7473 rev. 5/19/2020 BEFORE USE.
Design valid for use only with MiTek® connectors. This design is based only upon parameters shown, and is for an individual building component, not a truss system. Before use, the building designer must verify the applicability of design parameters and properly incorporate this design into the overall building design. Bracing indicated is to prevent buckling of individual truss web and/or chord members only. Additional temporary and permanent bracing is always required for stability and to prevent collapse with possible personal injury and property damage. For general guidance regarding the fabrication, storage, delivery, erection and bracing of trusses and truss systems, see **ANSI/TPI1 Quality Criteria, DSB-89 and BCSI Building Component Safety Information** available from Truss Plate Institute, 2670 Crain Highway, Suite 203 Waldorf, MD 20601

ENGINEERING BY TRENCO A MiTek Affiliate
818 Soundside Road
Edenton, NC 27932

Job	Truss	Truss Type	Qty	Ply	DRB HOMES - 89 FaNC
22090048	PB2	Piggyback	1	1	I54559196 Job Reference (optional)

Carter Components (Sanford), Sanford, NC - 27332, Run: 8.53 S Sep 22 2022 Print: 8.530 S Sep 22 2022 MiTek Industries, Inc. Wed Oct 05 09:11:40 Page: 1

ID:_yGnhJ2Aar_rjAcghDlxQrzFn1t-RfC?PsB70Hq3NSgPqnL8w3uITXbGKWrCDoi7J4zJC?f

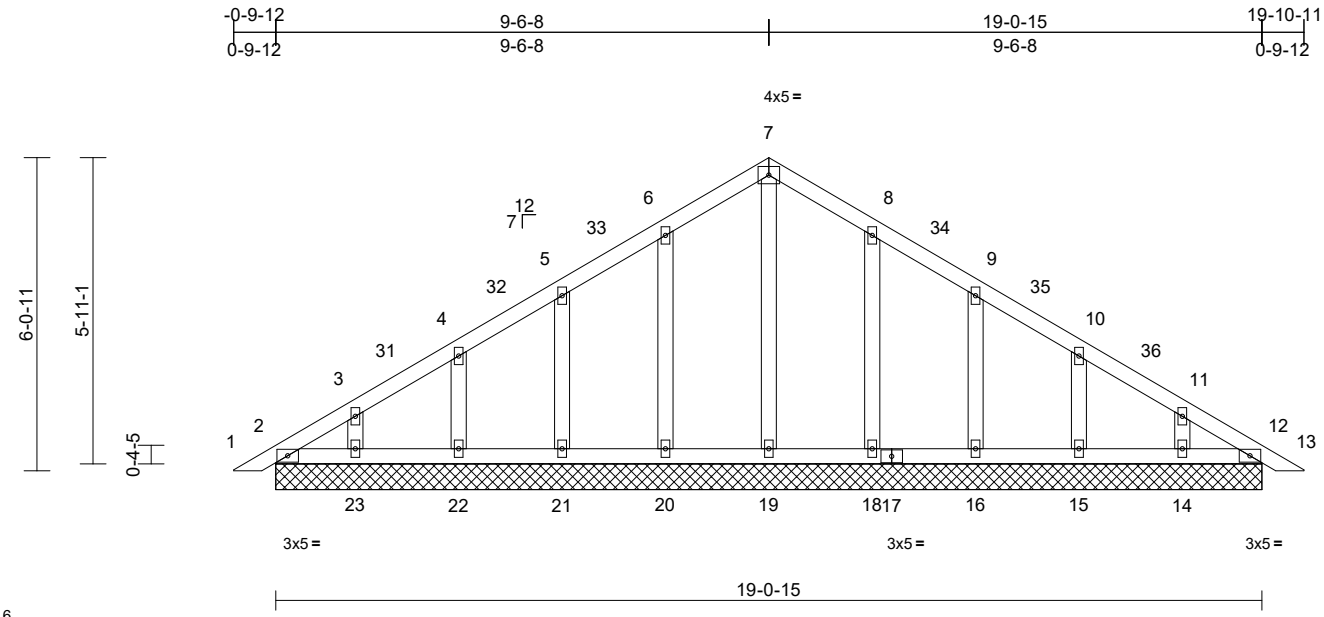

Scale = 1:44.6

Loading	(psf)	Spacing	1-11-4	CSI		DEFL	in	(loc)	l/defl	L/d	PLATES	GRIP
TCLL (roof)	20.0	Plate Grip DOL	1.15	TC	0.08	Vert(LL)	n/a	-	n/a	999	MT20	244/190
Snow (Pf)	20.0	Lumber DOL	1.15	BC	0.03	Vert(CT)	n/a	-	n/a	999		
TCDL	10.0	Rep Stress Incr	YES	WB	0.08	Horz(CT)	0.00	12	n/a	n/a		
BCLL	0.0*	Code	IRC2018/TPI2014	Matrix-MSH								
BCDL	10.0										Weight: 101 lb	FT = 20%

LUMBER

TOP CHORD 2x4 SP No.2
BOT CHORD 2x4 SP No.2
OTHERS 2x4 SP No.3

BRACING

TOP CHORD Structural wood sheathing directly applied or 6-0-0 oc purlins.
BOT CHORD Rigid ceiling directly applied or 10-0-0 oc bracing.

REACTIONS (size) 2=19-0-15, 12=19-0-15, 14=19-0-15, 15=19-0-15, 16=19-0-15, 18=19-0-15, 19=19-0-15, 20=19-0-15, 21=19-0-15, 22=19-0-15, 23=19-0-15, 24=19-0-15, 27=19-0-15
Max Horiz 2=-134 (LC 12), 24=-134 (LC 12)
Max Uplift 2=-24 (LC 10), 14=-47 (LC 15), 15=-49 (LC 15), 16=-50 (LC 15), 18=-50 (LC 15), 20=-51 (LC 14), 21=-49 (LC 14), 22=-49 (LC 14), 23=-49 (LC 14), 24=-24 (LC 10)
Max Grav 2=102 (LC 29), 12=91 (LC 22), 14=151 (LC 25), 15=164 (LC 25), 16=219 (LC 22), 18=245 (LC 22), 19=149 (LC 27), 20=245 (LC 21), 21=219 (LC 21), 22=164 (LC 24), 23=153 (LC 24), 24=102 (LC 29), 27=91 (LC 22)

FORCES (lb) - Maximum Compression/Maximum Tension

TOP CHORD 1-2=0/16, 2-3=-114/100, 3-4=-96/86, 4-5=-87/74, 5-6=-76/99, 6-7=-82/124, 7-8=-82/116, 8-9=-64/68, 9-10=-49/36, 10-11=-57/34, 11-12=-79/48, 12-13=0/16
BOT CHORD 2-23=-42/92, 22-23=-42/92, 21-22=-42/92, 20-21=-42/92, 19-20=-42/92, 18-19=-42/92, 16-18=-42/92, 15-16=-42/92, 14-15=-42/92, 12-14=-42/92
WEBS 7-19=-110/5, 6-20=-206/74, 5-21=-180/72, 4-22=-126/74, 3-23=-110/64, 8-18=-206/73, 9-16=-180/72, 10-15=-126/74, 11-14=-110/63

NOTES

1) Unbalanced roof live loads have been considered for this design.
2) Wind: ASCE 7-16; Vult=130mph (3-second gust) Vasd=103mph; TCDL=6.0psf; BCDL=6.0psf; h=25ft; Cat. II; Exp B; Enclosed; MWFRS (envelope) exterior zone and C-C Exterior(2E) 0-3-11 to 3-3-11, Interior (1) 3-3-11 to 7-4-10, Exterior(2R) 7-4-10 to 13-4-10, Interior (1) 13-4-10 to 17-5-10, Exterior(2E) 17-5-10 to 20-5-10 zone; cantilever left and right exposed ; end vertical left and right exposed;C-C for members and forces & MWFRS for reactions shown; Lumber DOL=1.60 plate grip DOL=1.60
3) Truss designed for wind loads in the plane of the truss only. For studs exposed to wind (normal to the face), see Standard Industry Gable End Details as applicable, or consult qualified building designer as per ANSI/TPI 1.
4) TCLL: ASCE 7-16; Pr=20.0 psf (roof LL: Lum DOL=1.15 Plate DOL=1.15); Pf=20.0 psf (Lum DOL=1.15 Plate DOL=1.15); Is=1.0; Rough Cat B; Fully Exp.; Ce=0.9; Cs=1.00; Ct=1.10
5) Unbalanced snow loads have been considered for this design.
6) This truss has been designed for greater of min roof live load of 12.0 psf or 1.00 times flat roof load of 20.0 psf on overhangs non-concurrent with other live loads.
7) All plates are 2x4 MT20 unless otherwise indicated.
8) Gable requires continuous bottom chord bearing.
9) Gable studs spaced at 2-0-0 oc.
10) This truss has been designed for a 10.0 psf bottom chord live load nonconcurrent with any other live loads.
11) * This truss has been designed for a live load of 20.0psf on the bottom chord in all areas where a rectangle 3-06-00 tall by 2-00-00 wide will fit between the bottom chord and any other members.
12) N/A
13) This truss is designed in accordance with the 2018 International Residential Code sections R502.11.1 and R802.10.2 and referenced standard ANSI/TPI 1.
14) See Standard Industry Piggyback Truss Connection Detail for Connection to base truss as applicable, or consult qualified building designer.

LOAD CASE(S) Standard

October 5,2022

WARNING - Verify design parameters and READ NOTES ON THIS AND INCLUDED MITEK REFERENCE PAGE MII-7473 rev. 5/19/2020 BEFORE USE.
Design valid for use only with MiTek® connectors. This design is based only upon parameters shown, and is for an individual building component, not a truss system. Before use, the building designer must verify the applicability of design parameters and properly incorporate this design into the overall building design. Bracing indicated is to prevent buckling of individual truss web and/or chord members only. Additional temporary and permanent bracing is always required for stability and to prevent collapse with possible personal injury and property damage. For general guidance regarding the fabrication, storage, delivery, erection and bracing of trusses and truss systems, see **ANSI/TPI1 Quality Criteria, DSB-89 and BCSI Building Component Safety Information** available from Truss Plate Institute, 2670 Crain Highway, Suite 203 Waldorf, MD 20601

ENGINEERING BY TRENCO A MiTek Affiliate
818 Soundside Road
Edenton, NC 27932

Job	Truss	Truss Type	Qty	Ply	DRB HOMES - 89 FaNC
22090048	PB3	Piggyback	10	1	I54559197 Job Reference (optional)

Carter Components (Sanford), Sanford, NC - 27332,

Run: 8.53 S Sep 22 2022 Print: 8.530 S Sep 22 2022 MiTek Industries, Inc. Wed Oct 05 09:11:40 Page: 1
ID:zEX2ENsjKrTOyaiTe97UfiyWWL8-RfC?PsB70Hq3NSgPqnL8w3uITXbGKWrCDoi7J4zJC?f

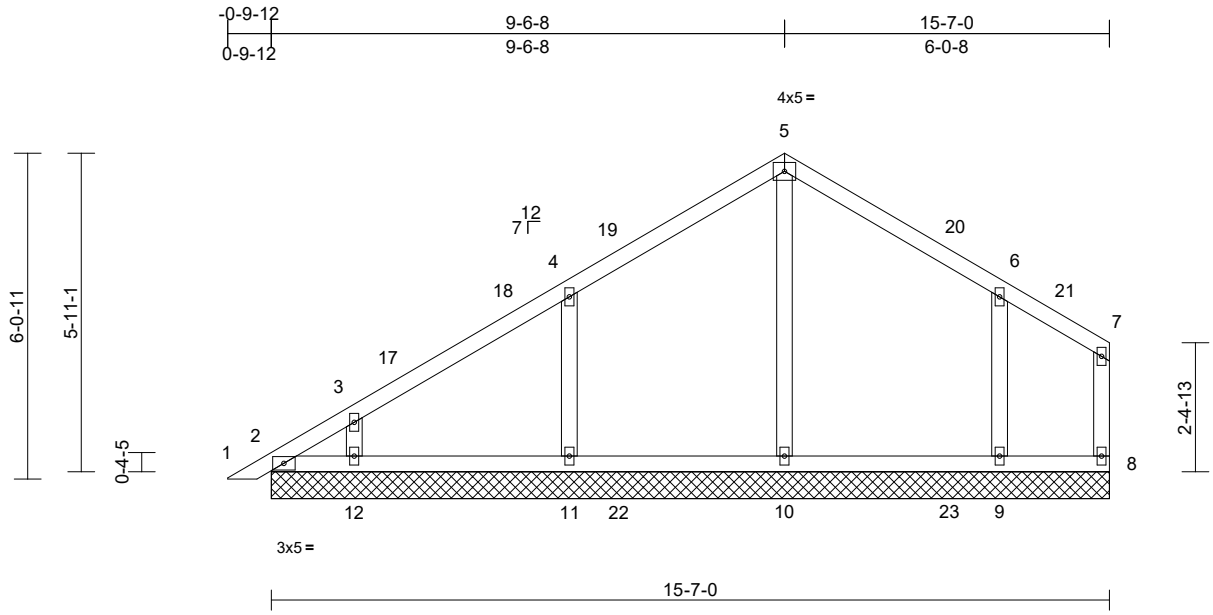

Scale = 1:42.8

Loading	(psf)	Spacing	2-0-0	CSI		DEFL	in	(loc)	l/defl	L/d	PLATES	GRIP
TCLL (roof)	20.0	Plate Grip DOL	1.15	TC	0.31	Vert(LL)	n/a	-	n/a	999	MT20	244/190
Snow (Pf)	20.0	Lumber DOL	1.15	BC	0.17	Vert(CT)	n/a	-	n/a	999		
TCDL	10.0	Rep Stress Incr	YES	WB	0.15	Horz(CT)	0.00	8	n/a	n/a		
BCLL	0.0*	Code	IRC2018/TPI2014	Matrix-MSH								
BCDL	10.0										Weight: 73 lb	FT = 20%

LUMBER

TOP CHORD	2x4 SP No.2
BOT CHORD	2x4 SP No.2
WEBS	2x4 SP No.3
OTHERS	2x4 SP No.3

BRACING

TOP CHORD	Structural wood sheathing directly applied or 6-0-0 oc purlins, except end verticals.
BOT CHORD	Rigid ceiling directly applied or 6-0-0 oc bracing.

REACTIONS (size) 2=15-7-0, 8=15-7-0, 9=15-7-0, 10=15-7-0, 11=15-7-0, 12=15-7-0, 13=15-7-0
Max Horiz 2=163 (LC 13), 13=163 (LC 13)
Max Uplift 2=-58 (LC 10), 8=-12 (LC 14), 9=-104 (LC 15), 11=-116 (LC 14), 12=-80 (LC 14), 13=-58 (LC 10)
Max Grav 2=94 (LC 29), 8=34 (LC 25), 9=436 (LC 22), 10=431 (LC 24), 11=478 (LC 5), 12=313 (LC 24), 13=94 (LC 29)

FORCES (lb) - Maximum Compression/Maximum Tension

TOP CHORD	1-2=0/16, 2-3=-159/147, 3-4=-143/132, 4-5=-124/140, 5-6=-114/139, 6-7=-44/78, 7-8=-34/28
BOT CHORD	2-12=-34/38, 11-12=-34/38, 10-11=-34/38, 9-10=-34/38, 8-9=-34/38
WEBS	5-10=-244/26, 4-11=-394/164, 3-12=-207/129, 6-9=-369/145

NOTES

1) Unbalanced roof live loads have been considered for this design.
2) Wind: ASCE 7-16; Vult=130mph (3-second gust) Vasd=103mph; TCDL=6.0psf; BCDL=6.0psf; h=25ft; Cat. II; Exp B; Enclosed; MWFRS (envelope) exterior zone and C-C Exterior(2E) 0-3-11 to 3-3-11, Interior (1) 3-3-11 to 7-4-10, Exterior(2R) 7-4-10 to 13-3-6, Exterior (2E) 13-3-6 to 16-3-6 zone; cantilever left and right exposed ; end vertical left and right exposed;C-C for members and forces & MWFRS for reactions shown; Lumber DOL=1.60 plate grip DOL=1.60
3) Truss designed for wind loads in the plane of the truss only. For studs exposed to wind (normal to the face), see Standard Industry Gable End Details as applicable, or consult qualified building designer as per ANSI/TPI 1.
4) TCLL: ASCE 7-16; Pr=20.0 psf (roof LL: Lum DOL=1.15 Plate DOL=1.15); Pf=20.0 psf (Lum DOL=1.15 Plate DOL=1.15); Is=1.0; Rough Cat B; Fully Exp.; Ce=0.9; Cs=1.00; Ct=1.10
5) Unbalanced snow loads have been considered for this design.
6) This truss has been designed for greater of min roof live load of 12.0 psf or 1.00 times flat roof load of 20.0 psf on overhangs non-concurrent with other live loads.
7) All plates are 2x4 MT20 unless otherwise indicated.
8) Gable requires continuous bottom chord bearing.
9) Gable studs spaced at 4-0-0 oc.
10) This truss has been designed for a 10.0 psf bottom chord live load nonconcurrent with any other live loads.
11) * This truss has been designed for a live load of 20.0psf on the bottom chord in all areas where a rectangle 3-06-00 tall by 2-00-00 wide will fit between the bottom chord and any other members, with BCDL = 10.0psf.
12) N/A
13) This truss is designed in accordance with the 2018 International Residential Code sections R502.11.1 and R802.10.2 and referenced standard ANSI/TPI 1.
14) See Standard Industry Piggyback Truss Connection Detail for Connection to base truss as applicable, or consult qualified building designer.

LOAD CASE(S) Standard

October 5,2022

WARNING - Verify design parameters and READ NOTES ON THIS AND INCLUDED MITEK REFERENCE PAGE MII-7473 rev. 5/19/2020 BEFORE USE.
Design valid for use only with MiTek® connectors. This design is based only upon parameters shown, and is for an individual building component, not a truss system. Before use, the building designer must verify the applicability of design parameters and properly incorporate this design into the overall building design. Bracing indicated is to prevent buckling of individual truss web and/or chord members only. Additional temporary and permanent bracing is always required for stability and to prevent collapse with possible personal injury and property damage. For general guidance regarding the fabrication, storage, delivery, erection and bracing of trusses and truss systems, see **ANSI/TPI1 Quality Criteria, DSB-89 and BCSI Building Component Safety Information** available from Truss Plate Institute, 2670 Crain Highway, Suite 203 Waldorf, MD 20601

ENGINEERING BY TRENCO A MiTek Affiliate
818 Soundside Road
Edenton, NC 27932

Job	Truss	Truss Type	Qty	Ply	DRB HOMES - 89 FaNC
22090048	PB4	Piggyback	1	1	I54559198 Job Reference (optional)

Carter Components (Sanford), Sanford, NC - 27332,

Run: 8.53 S Sep 22 2022 Print: 8.530 S Sep 22 2022 MiTek Industries, Inc. Wed Oct 05 09:11:41 Page: 1
ID:MRf35rOp62pkXiBdNYMVdnyWWHt-RfC?PsB70Hq3NSgPqnL8w3uITXbGKWrCDoi7J4zJC?f

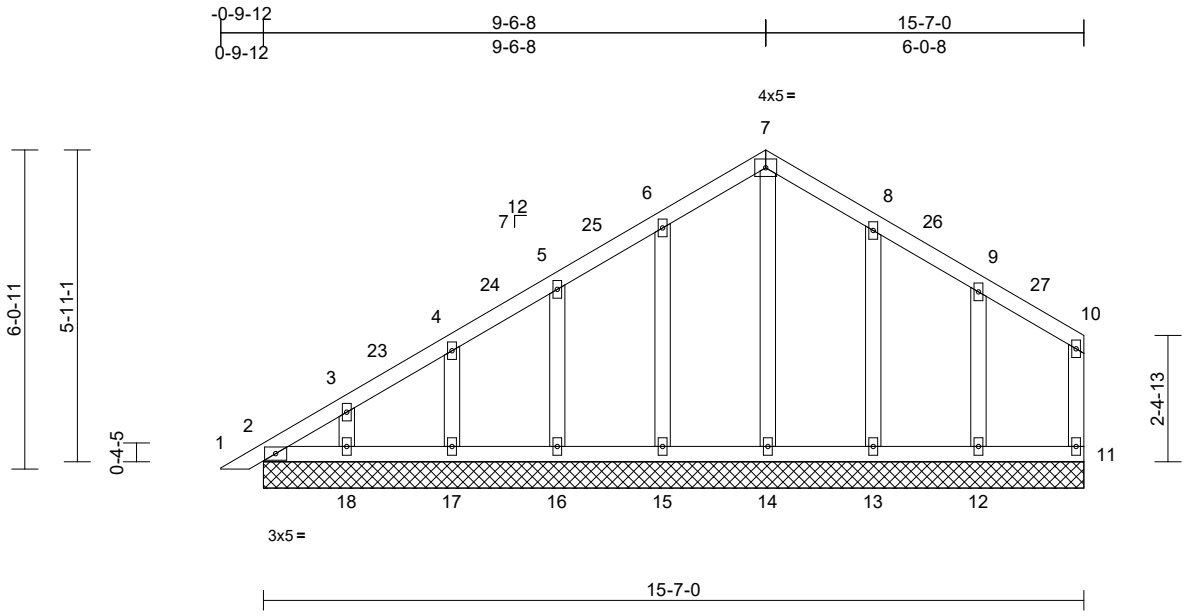

Scale = 1:43.8

Loading	(psf)	Spacing	1-11-4	CSI		DEFL	in	(loc)	l/defl	L/d	PLATES	GRIP
TCLL (roof)	20.0	Plate Grip DOL	1.15	TC	0.09	Vert(LL)	n/a	-	n/a	999	MT20	244/190
Snow (Pf)	20.0	Lumber DOL	1.15	BC	0.03	Vert(CT)	n/a	-	n/a	999		
TCDL	10.0	Rep Stress Incr	YES	WB	0.08	Horz(CT)	0.00	11	n/a	n/a		
BCLL	0.0*	Code	IRC2018/TPI2014	Matrix-MSH								
BCDL	10.0										Weight: 88 lb	FT = 20%

LUMBER

TOP CHORD	2x4 SP No.2
BOT CHORD	2x4 SP No.2
WEBS	2x4 SP No.3
OTHERS	2x4 SP No.3

BRACING

TOP CHORD	Structural wood sheathing directly applied or 6-0-0 oc purlins, except end verticals.
BOT CHORD	Rigid ceiling directly applied or 10-0-0 oc bracing.

REACTIONS (size) 2=15-7-0, 11=15-7-0, 12=15-7-0, 13=15-7-0, 14=15-7-0, 15=15-7-0, 16=15-7-0, 17=15-7-0, 18=15-7-0, 19=15-7-0
Max Horiz 2=158 (LC 13), 19=158 (LC 13)
Max Uplift 2=-45 (LC 10), 11=-12 (LC 14), 12=-55 (LC 15), 13=-50 (LC 15), 14=-2 (LC 11), 15=-49 (LC 14), 16=-50 (LC 14), 17=-49 (LC 14), 18=-49 (LC 14), 19=-45 (LC 10)
Max Grav 2=117 (LC 25), 11=74 (LC 25), 12=222 (LC 22), 13=247 (LC 22), 14=159 (LC 24), 15=243 (LC 21), 16=220 (LC 21), 17=163 (LC 21), 18=156 (LC 24), 19=117 (LC 25)

FORCES (lb) - Maximum Compression/Maximum Tension

TOP CHORD 1-2=0/16, 2-3=-148/131, 3-4=-138/118, 4-5=-124/114, 5-6=-111/111, 6-7=-115/150, 7-8=-115/150, 8-9=-86/104, 9-10=-57/61, 10-11=-62/43

BOT CHORD 2-18=-31/37, 17-18=-31/37, 16-17=-31/37, 15-16=-31/37, 14-15=-31/37, 13-14=-31/37, 12-13=-31/37, 11-12=-31/37

WEBS 9-12=-183/79, 8-13=-209/73, 7-14=-121/39, 6-15=-204/73, 5-16=-181/72, 4-17=-125/73, 3-18=-112/64

NOTES

1) Unbalanced roof live loads have been considered for this design.
2) Wind: ASCE 7-16; Vult=130mph (3-second gust) Vasd=103mph; TCDL=6.0psf; BCDL=6.0psf; h=25ft; Cat. II; Exp B; Enclosed; MWFRS (envelope) exterior zone and C-C Exterior(2E) 0-3-11 to 3-3-11, Interior (1) 3-3-11 to 7-4-10, Exterior(2R) 7-4-10 to 13-3-6, Exterior (2E) 13-3-6 to 16-3-6 zone; cantilever left and right exposed ; end vertical left and right exposed;C-C for members and forces & MWFRS for reactions shown; Lumber DOL=1.60 plate grip DOL=1.60
3) Truss designed for wind loads in the plane of the truss only. For studs exposed to wind (normal to the face), see Standard Industry Gable End Details as applicable, or consult qualified building designer as per ANSI/TPI 1.
4) TCLL: ASCE 7-16; Pr=20.0 psf (roof LL: Lum DOL=1.15 Plate DOL=1.15); Pf=20.0 psf (Lum DOL=1.15 Plate DOL=1.15); Is=1.0; Rough Cat B; Fully Exp.; Ce=0.9; Cs=1.00; Ct=1.10
5) Unbalanced snow loads have been considered for this design.
6) This truss has been designed for greater of min roof live load of 12.0 psf or 1.00 times flat roof load of 20.0 psf on overhangs non-concurrent with other live loads.
7) All plates are 2x4 MT20 unless otherwise indicated.
8) Gable requires continuous bottom chord bearing.
9) Gable studs spaced at 2-0-0 oc.
10) This truss has been designed for a 10.0 psf bottom chord live load nonconcurrent with any other live loads.
11) * This truss has been designed for a live load of 20.0psf on the bottom chord in all areas where a rectangle 3-06-00 tall by 2-00-00 wide will fit between the bottom chord and any other members.
12) N/A
13) This truss is designed in accordance with the 2018 International Residential Code sections R502.11.1 and R802.10.2 and referenced standard ANSI/TPI 1.
14) See Standard Industry Piggyback Truss Connection Detail for Connection to base truss as applicable, or consult qualified building designer.

LOAD CASE(S) Standard

October 5,2022

WARNING - Verify design parameters and READ NOTES ON THIS AND INCLUDED MITEK REFERENCE PAGE MII-7473 rev. 5/19/2020 BEFORE USE.
Design valid for use only with MiTek® connectors. This design is based only upon parameters shown, and is for an individual building component, not a truss system. Before use, the building designer must verify the applicability of design parameters and properly incorporate this design into the overall building design. Bracing indicated is to prevent buckling of individual truss web and/or chord members only. Additional temporary and permanent bracing is always required for stability and to prevent collapse with possible personal injury and property damage. For general guidance regarding the fabrication, storage, delivery, erection and bracing of trusses and truss systems, see **ANSI/TPI1 Quality Criteria, DSB-89 and BCSI Building Component Safety Information** available from Truss Plate Institute, 2670 Crain Highway, Suite 203 Waldorf, MD 20601

ENGINEERING BY TRENCO A MiTek Affiliate
818 Soundside Road
Edenton, NC 27932

Job	Truss	Truss Type	Qty	Ply	DRB HOMES - 89 FaNC
22090048	PB5	Piggyback	10	1	I54559199 Job Reference (optional)

Carter Components (Sanford), Sanford, NC - 27332,

Run: 8.53 S Sep 22 2022 Print: 8.530 S Sep 22 2022 MiTek Industries, Inc. Wed Oct 05 09:11:41 Page: 1
ID:FdqRVfn0ZNVmMDACD34oHRzTR4m-RfC?PsB70Hq3NSgPqnL8w3uITXbGKWrCDoi7J4zJC?f

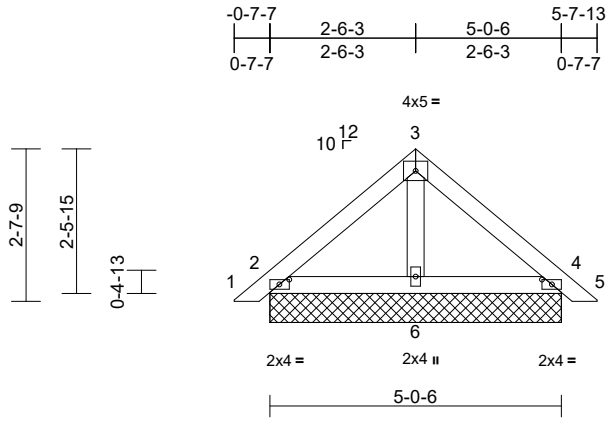

Scale = 1:39.8

Plate Offsets (X, Y): [2:0-2-1,0-1-0], [4:0-2-1,0-1-0]

Loading	(psf)	Spacing	1-11-4	CSI		DEFL	in	(loc)	l/defl	L/d	PLATES	GRIP
TCLL (roof)	20.0	Plate Grip DOL	1.15	TC	0.11	Vert(LL)	n/a	-	n/a	999	MT20	244/190
Snow (Pf)	20.0	Lumber DOL	1.15	BC	0.12	Vert(CT)	n/a	-	n/a	999		
TCDL	10.0	Rep Stress Incr	YES	WB	0.01	Horz(CT)	0.00	4	n/a	n/a		
BCLL	0.0*	Code	IRC2018/TPI2014	Matrix-MP								
BCDL	10.0										Weight: 22 lb	FT = 20%

LUMBER
TOP CHORD 2x4 SP No.2
BOT CHORD 2x4 SP No.2
OTHERS 2x4 SP No.3

BRACING
TOP CHORD Structural wood sheathing directly applied or 6-0-0 oc purlins.
BOT CHORD Rigid ceiling directly applied or 10-0-0 oc bracing.

REACTIONS (size) 2=5-0-6, 4=5-0-6, 6=5-0-6, 7=5-0-6, 10=5-0-6
Max Horiz 2=-55 (LC 12), 7=-55 (LC 12)
Max Uplift 2=-24 (LC 14), 4=-31 (LC 15), 7=-24 (LC 14), 10=-31 (LC 15)
Max Grav 2=199 (LC 21), 4=199 (LC 22), 6=163 (LC 21), 7=199 (LC 21), 10=199 (LC 22)

FORCES (lb) - Maximum Compression/Maximum Tension
TOP CHORD 1-2=0/24, 2-3=-117/104, 3-4=-117/104, 4-5=0/24
BOT CHORD 2-6=-16/55, 4-6=-9/55
WEBS 3-6=-63/0

NOTES
1) Unbalanced roof live loads have been considered for this design.
2) Wind: ASCE 7-16; Vult=130mph (3-second gust) Vasd=103mph; TCDL=6.0psf; BCDL=6.0psf; h=25ft; Cat. II; Exp B; Enclosed; MWFRS (envelope) exterior zone and C-C Corner(3E) zone; cantilever left and right exposed ; end vertical left and right exposed;C-C for members and forces & MWFRS for reactions shown; Lumber DOL=1.60 plate grip DOL=1.60
3) Truss designed for wind loads in the plane of the truss only. For studs exposed to wind (normal to the face), see Standard Industry Gable End Details as applicable, or consult qualified building designer as per ANSI/TPI 1.
4) TCLL: ASCE 7-16; Pr=20.0 psf (roof LL: Lum DOL=1.15 Plate DOL=1.15); Pf=20.0 psf (Lum DOL=1.15 Plate DOL=1.15); Is=1.0; Rough Cat B; Fully Exp.; Ce=0.9; Cs=1.00; Ct=1.10
5) Unbalanced snow loads have been considered for this design.
6) This truss has been designed for greater of min roof live load of 12.0 psf or 1.00 times flat roof load of 20.0 psf on overhangs non-concurrent with other live loads.
7) Gable requires continuous bottom chord bearing.
8) Gable studs spaced at 2-0-0 oc.
9) This truss has been designed for a 10.0 psf bottom chord live load nonconcurrent with any other live loads.
10) * This truss has been designed for a live load of 20.0psf on the bottom chord in all areas where a rectangle 3-06-00 tall by 2-00-00 wide will fit between the bottom chord and any other members.
11) N/A
12) This truss is designed in accordance with the 2018 International Residential Code sections R502.11.1 and R802.10.2 and referenced standard ANSI/TPI 1.
13) See Standard Industry Piggyback Truss Connection Detail for Connection to base truss as applicable, or consult qualified building designer.

LOAD CASE(S) Standard

October 5,2022

WARNING - Verify design parameters and READ NOTES ON THIS AND INCLUDED MITEK REFERENCE PAGE MII-7473 rev. 5/19/2020 BEFORE USE.
Design valid for use only with MiTek® connectors. This design is based only upon parameters shown, and is for an individual building component, not a truss system. Before use, the building designer must verify the applicability of design parameters and properly incorporate this design into the overall building design. Bracing indicated is to prevent buckling of individual truss web and/or chord members only. Additional temporary and permanent bracing is always required for stability and to prevent collapse with possible personal injury and property damage. For general guidance regarding the fabrication, storage, delivery, erection and bracing of trusses and truss systems, see **ANSI/TPI1 Quality Criteria, DSB-89 and BCSI Building Component Safety Information** available from Truss Plate Institute, 2670 Crain Highway, Suite 203 Waldorf, MD 20601

ENGINEERING BY TRENCO A MiTek Affiliate
818 Soundside Road
Edenton, NC 27932

Job	Truss	Truss Type	Qty	Ply	DRB HOMES - 89 FaNC
22090048	V1	Valley	1	1	I54559200 Job Reference (optional)

Carter Components (Sanford), Sanford, NC - 27332,

Run: 8.53 S Sep 22 2022 Print: 8.530 S Sep 22 2022 MiTek Industries, Inc. Wed Oct 05 09:11:41 Page: 1
ID:obI8CR79AVIhJxhIYr2zsHzhpM4-RfC?PsB70Hq3NSgPqnL8w3uITXbGKWrCDoi7J4zJC?f

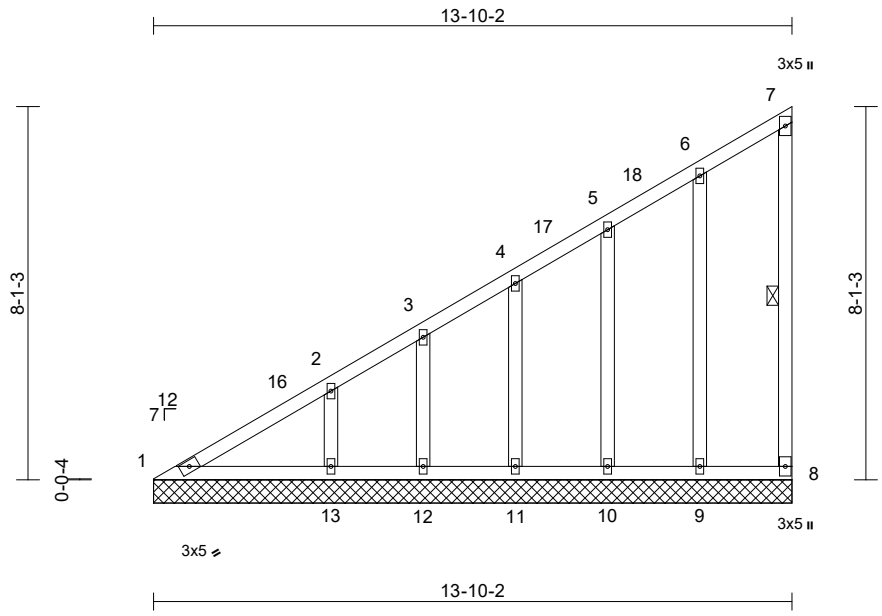

Scale = 1:50

Loading	(psf)	Spacing	1-11-4	CSI		DEFL	in	(loc)	l/defl	L/d	PLATES	GRIP
TCLL (roof)	20.0	Plate Grip DOL	1.15	TC	0.67	Vert(LL)	n/a	-	n/a	999	MT20	244/190
Snow (Pf)	20.0	Lumber DOL	1.15	BC	0.20	Vert(TL)	n/a	-	n/a	999		
TCDL	10.0	Rep Stress Incr	YES	WB	0.17	Horiz(TL)	0.00	8	n/a	n/a		
BCLL	0.0*	Code	IRC2018/TPI2014	Matrix-MSH								
BCDL	10.0										Weight: 85 lb	FT = 20%

LUMBER

TOP CHORD 2x4 SP No.2
BOT CHORD 2x4 SP No.2
WEBS 2x4 SP No.3
OTHERS 2x4 SP No.3

BRACING

TOP CHORD Structural wood sheathing directly applied or 6-0-0 oc purlins, except end verticals.
BOT CHORD Rigid ceiling directly applied or 10-0-0 oc bracing.
WEBS 1 Row at midpt 7-8

REACTIONS (size) 1=13-10-2, 8=13-10-2, 9=13-10-2, 10=13-10-2, 11=13-10-2, 12=13-10-2, 13=13-10-2
Max Horiz 1=270 (LC 11)
Max Uplift 1=-11 (LC 10), 8=-40 (LC 13), 9=-54 (LC 14), 10=-46 (LC 14), 11=-52 (LC 14), 12=-40 (LC 14), 13=-72 (LC 14)
Max Grav 1=164 (LC 24), 8=87 (LC 20), 9=243 (LC 20), 10=220 (LC 20), 11=179 (LC 20), 12=101 (LC 23), 13=308 (LC 23)

FORCES (lb) - Maximum Compression/Maximum Tension
TOP CHORD 1-2=-263/158, 2-3=-190/116, 3-4=-164/108, 4-5=-152/97, 5-6=-143/97, 6-7=-104/107, 7-8=-72/30
BOT CHORD 1-13=-114/184, 12-13=-114/142, 11-12=-114/142, 10-11=-114/142, 9-10=-114/142, 8-9=-114/142
WEBS 6-9=-201/63, 5-10=-184/114, 4-11=-132/96, 3-12=-92/80, 2-13=-201/142

NOTES

1) Wind: ASCE 7-16; Vult=130mph (3-second gust) Vasd=103mph; TCDL=6.0psf; BCDL=6.0psf; h=25ft; Cat. II; Exp B; Enclosed; MWFRS (envelope) exterior zone and C-C Corner(3E) 0-0-7 to 3-0-7, Exterior(2N) 3-0-7 to 10-8-13, Corner(3E) 10-8-13 to 13-8-13 zone; cantilever left and right exposed ; end vertical left and right exposed;C-C for members and forces & MWFRS for reactions shown; Lumber DOL=1.60 plate grip DOL=1.60
2) Truss designed for wind loads in the plane of the truss only. For studs exposed to wind (normal to the face), see Standard Industry Gable End Details as applicable, or consult qualified building designer as per ANSI/TPI 1.
3) TCLL: ASCE 7-16; Pr=20.0 psf (roof LL: Lum DOL=1.15 Plate DOL=1.15); Pf=20.0 psf (Lum DOL=1.15 Plate DOL=1.15); Is=1.0; Rough Cat B; Fully Exp.; Ce=0.9; Cs=1.00; Ct=1.10
4) Unbalanced snow loads have been considered for this design.
5) All plates are 2x4 MT20 unless otherwise indicated.
6) Gable requires continuous bottom chord bearing.
7) Gable studs spaced at 2-0-0 oc.
8) This truss has been designed for a 10.0 psf bottom chord live load nonconcurrent with any other live loads.
9) * This truss has been designed for a live load of 20.0psf on the bottom chord in all areas where a rectangle 3-06-00 tall by 2-00-00 wide will fit between the bottom chord and any other members.
10) Provide mechanical connection (by others) of truss to bearing plate capable of withstanding 40 lb uplift at joint 8, 11 lb uplift at joint 1, 54 lb uplift at joint 9, 46 lb uplift at joint 10, 52 lb uplift at joint 11, 40 lb uplift at joint 12 and 72 lb uplift at joint 13.
11) This truss is designed in accordance with the 2018 International Residential Code sections R502.11.1 and R802.10.2 and referenced standard ANSI/TPI 1.

LOAD CASE(S) Standard

October 5,2022

WARNING - Verify design parameters and READ NOTES ON THIS AND INCLUDED MITEK REFERENCE PAGE MII-7473 rev. 5/19/2020 BEFORE USE.
Design valid for use only with MiTek® connectors. This design is based only upon parameters shown, and is for an individual building component, not a truss system. Before use, the building designer must verify the applicability of design parameters and properly incorporate this design into the overall building design. Bracing indicated is to prevent buckling of individual truss web and/or chord members only. Additional temporary and permanent bracing is always required for stability and to prevent collapse with possible personal injury and property damage. For general guidance regarding the fabrication, storage, delivery, erection and bracing of trusses and truss systems, see **ANSI/TPI1 Quality Criteria, DSB-89 and BCSI Building Component Safety Information** available from Truss Plate Institute, 2670 Crain Highway, Suite 203 Waldorf, MD 20601

ENGINEERING BY TRENCO A MiTek Affiliate
818 Soundside Road
Edenton, NC 27932

Job	Truss	Truss Type	Qty	Ply	DRB HOMES - 89 FaNC
22090048	V2	Valley	1	1	I54559201 Job Reference (optional)

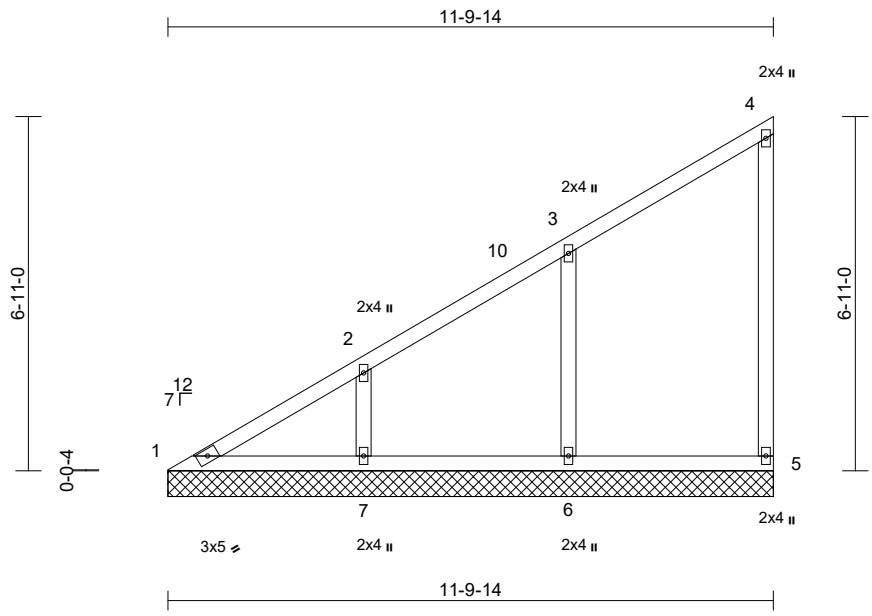

Scale = 1:45

Loading	(psf)	Spacing	2-0-0	CSI		DEFL	in	(loc)	l/defl	L/d	PLATES	GRIP
TCLL (roof)	20.0	Plate Grip DOL	1.15	TC	0.46	Vert(LL)	n/a	-	n/a	999	MT20	244/190
Snow (Pf)	20.0	Lumber DOL	1.15	BC	0.16	Vert(TL)	n/a	-	n/a	999		
TCDL	10.0	Rep Stress Incr	YES	WB	0.15	Horiz(TL)	0.00	5	n/a	n/a		
BCLL	0.0*	Code	IRC2018/TPI2014	Matrix-MSH								
BCDL	10.0										Weight: 55 lb	FT = 20%

LUMBER

TOP CHORD 2x4 SP No.2
BOT CHORD 2x4 SP No.2
WEBS 2x4 SP No.3
OTHERS 2x4 SP No.3

BRACING

TOP CHORD Structural wood sheathing directly applied or 6-0-0 oc purlins, except end verticals.
BOT CHORD Rigid ceiling directly applied or 10-0-0 oc bracing.

REACTIONS (size) 1=11-9-14, 5=11-9-14, 6=11-9-14, 7=11-9-14
Max Horiz 1=236 (LC 11)
Max Uplift 1=-4 (LC 10), 5=-35 (LC 11), 6=-109 (LC 14), 7=-94 (LC 14)
Max Grav 1=167 (LC 24), 5=211 (LC 5), 6=491 (LC 5), 7=413 (LC 23)

FORCES (lb) - Maximum Compression/Maximum Tension
TOP CHORD 1-2=-268/139, 2-3=-160/110, 3-4=-136/89, 4-5=-159/45
BOT CHORD 1-7=-99/196, 6-7=-99/110, 5-6=-99/110
WEBS 3-6=-387/152, 2-7=-254/148

NOTES

1) Wind: ASCE 7-16; Vult=130mph (3-second gust) Vasd=103mph; TCDL=6.0psf; BCDL=6.0psf; h=25ft; Cat. II; Exp B; Enclosed; MWFRS (envelope) exterior zone and C-C Exterior(2E) 0-0-7 to 3-0-7, Interior (1) 3-0-7 to 8-8-9, Exterior(2E) 8-8-9 to 11-8-9 zone; cantilever left and right exposed ; end vertical left and right exposed;C-C for members and forces & MWFRS for reactions shown; Lumber DOL=1.60 plate grip DOL=1.60
2) Truss designed for wind loads in the plane of the truss only. For studs exposed to wind (normal to the face), see Standard Industry Gable End Details as applicable, or consult qualified building designer as per ANSI/TPI 1.
3) TCLL: ASCE 7-16; Pr=20.0 psf (roof LL: Lum DOL=1.15 Plate DOL=1.15); Pf=20.0 psf (Lum DOL=1.15 Plate DOL=1.15); Is=1.0; Rough Cat B; Fully Exp.; Ce=0.9; Cs=1.00; Ct=1.10
4) Unbalanced snow loads have been considered for this design.
5) Gable requires continuous bottom chord bearing.
6) Gable studs spaced at 4-0-0 oc.
7) This truss has been designed for a 10.0 psf bottom chord live load nonconcurrent with any other live loads.
8) * This truss has been designed for a live load of 20.0psf on the bottom chord in all areas where a rectangle 3-06-00 tall by 2-00-00 wide will fit between the bottom chord and any other members, with BCDL = 10.0psf.
9) Provide mechanical connection (by others) of truss to bearing plate capable of withstanding 35 lb uplift at joint 5, 4 lb uplift at joint 1, 109 lb uplift at joint 6 and 94 lb uplift at joint 7.
10) This truss is designed in accordance with the 2018 International Residential Code sections R502.11.1 and R802.10.2 and referenced standard ANSI/TPI 1.

LOAD CASE(S) Standard

October 5,2022

WARNING - Verify design parameters and READ NOTES ON THIS AND INCLUDED MITEK REFERENCE PAGE MII-7473 rev. 5/19/2020 BEFORE USE.
Design valid for use only with MiTek® connectors. This design is based only upon parameters shown, and is for an individual building component, not a truss system. Before use, the building designer must verify the applicability of design parameters and properly incorporate this design into the overall building design. Bracing indicated is to prevent buckling of individual truss web and/or chord members only. Additional temporary and permanent bracing is always required for stability and to prevent collapse with possible personal injury and property damage. For general guidance regarding the fabrication, storage, delivery, erection and bracing of trusses and truss systems, see **ANSI/TPI1 Quality Criteria, DSB-89 and BCSI Building Component Safety Information** available from Truss Plate Institute, 2670 Crain Highway, Suite 203 Waldorf, MD 20601

ENGINEERING BY TRENCO A MiTek Affiliate
818 Soundside Road
Edenton, NC 27932

Job	Truss	Truss Type	Qty	Ply	DRB HOMES - 89 FaNC
22090048	V3	Valley	1	1	I54559202 Job Reference (optional)

Carter Components (Sanford), Sanford, NC - 27332, Run: 8.53 S Sep 22 2022 Print: 8.530 S Sep 22 2022 MiTek Industries, Inc. Wed Oct 05 09:11:42 Page: 1
ID:dIfQSUCwlL2q1s9Sv59O5YzhpM_-RfC?PsB70Hq3NSgPqnL8w3uITXbGKWrCDoi7J4zJC?f

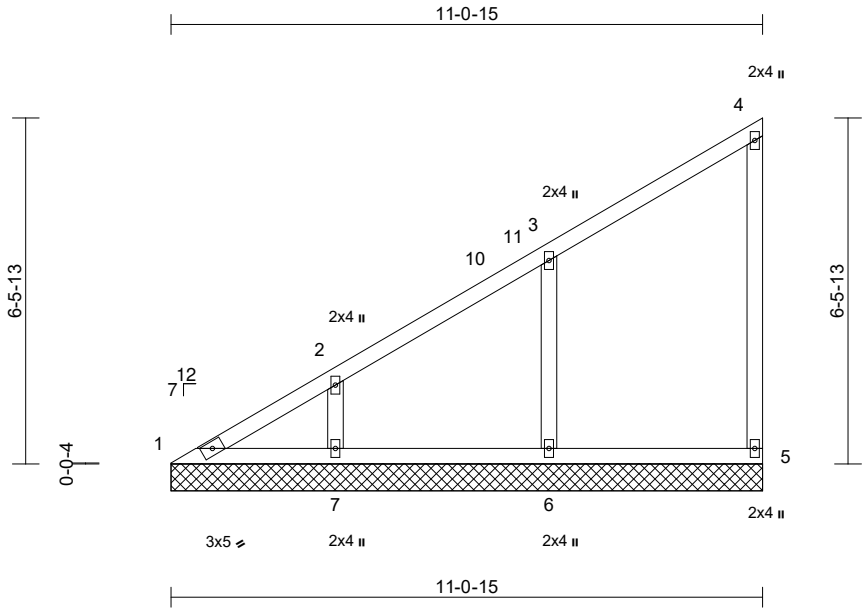

Scale = 1:43.1

Loading	(psf)	Spacing	2-0-0	CSI		DEFL	in	(loc)	l/defl	L/d	PLATES	GRIP
TCLL (roof)	20.0	Plate Grip DOL	1.15	TC	0.40	Vert(LL)	n/a	-	n/a	999	MT20	244/190
Snow (Pf)	20.0	Lumber DOL	1.15	BC	0.16	Vert(TL)	n/a	-	n/a	999		
TCDL	10.0	Rep Stress Incr	YES	WB	0.13	Horiz(TL)	0.00	5	n/a	n/a		
BCLL	0.0*	Code	IRC2018/TPI2014	Matrix-MSH								
BCDL	10.0										Weight: 51 lb	FT = 20%

LUMBER

TOP CHORD	2x4 SP No.2
BOT CHORD	2x4 SP No.2
WEBS	2x4 SP No.3
OTHERS	2x4 SP No.3

BRACING

TOP CHORD	Structural wood sheathing directly applied or 6-0-0 oc purlins, except end verticals.
BOT CHORD	Rigid ceiling directly applied or 10-0-0 oc bracing.

REACTIONS (size) 1=11-0-15, 5=11-0-15, 6=11-0-15, 7=11-0-15
Max Horiz 1=221 (LC 11)
Max Uplift 1=-11 (LC 10), 5=-33 (LC 11), 6=-61 (LC 14), 7=-86 (LC 14)
Max Grav 1=137 (LC 24), 5=209 (LC 5), 6=501 (LC 5), 7=364 (LC 23)

FORCES (lb) - Maximum Compression/Maximum Tension
TOP CHORD 1-2=-213/130, 2-3=-153/110, 3-4=-133/82, 4-5=-158/44
BOT CHORD 1-7=-93/142, 6-7=-93/103, 5-6=-93/103
WEBS 3-6=-392/141, 2-7=-229/129

NOTES

1) Wind: ASCE 7-16; Vult=130mph (3-second gust) Vasd=103mph; TCDL=6.0psf; BCDL=6.0psf; h=25ft; Cat. II; Exp B; Enclosed; MWFRS (envelope) exterior zone and C-C Exterior(2E) 0-0-7 to 3-1-6, Interior (1) 3-1-6 to 6-8-11, Exterior(2R) 6-8-11 to 10-11-10 zone; cantilever left and right exposed ; end vertical left and right exposed;C-C for members and forces & MWFRS for reactions shown; Lumber DOL=1.60 plate grip DOL=1.60
2) Truss designed for wind loads in the plane of the truss only. For studs exposed to wind (normal to the face), see Standard Industry Gable End Details as applicable, or consult qualified building designer as per ANSI/TPI 1.
3) TCLL: ASCE 7-16; Pr=20.0 psf (roof LL: Lum DOL=1.15 Plate DOL=1.15); Pf=20.0 psf (Lum DOL=1.15 Plate DOL=1.15); Is=1.0; Rough Cat B; Fully Exp.; Ce=0.9; Cs=1.00; Ct=1.10
4) Unbalanced snow loads have been considered for this design.
5) Gable requires continuous bottom chord bearing.
6) Gable studs spaced at 4-0-0 oc.
7) This truss has been designed for a 10.0 psf bottom chord live load nonconcurrent with any other live loads.
8) * This truss has been designed for a live load of 20.0psf on the bottom chord in all areas where a rectangle 3-06-00 tall by 2-00-00 wide will fit between the bottom chord and any other members, with BCDL = 10.0psf.
9) Provide mechanical connection (by others) of truss to bearing plate capable of withstanding 33 lb uplift at joint 5, 11 lb uplift at joint 1, 61 lb uplift at joint 6 and 86 lb uplift at joint 7.
10) This truss is designed in accordance with the 2018 International Residential Code sections R502.11.1 and R802.10.2 and referenced standard ANSI/TPI 1.

LOAD CASE(S) Standard

October 5,2022

WARNING - Verify design parameters and READ NOTES ON THIS AND INCLUDED MITEK REFERENCE PAGE MII-7473 rev. 5/19/2020 BEFORE USE.
Design valid for use only with MiTek® connectors. This design is based only upon parameters shown, and is for an individual building component, not a truss system. Before use, the building designer must verify the applicability of design parameters and properly incorporate this design into the overall building design. Bracing indicated is to prevent buckling of individual truss web and/or chord members only. Additional temporary and permanent bracing is always required for stability and to prevent collapse with possible personal injury and property damage. For general guidance regarding the fabrication, storage, delivery, erection and bracing of trusses and truss systems, see **ANSI/TPI1 Quality Criteria, DSB-89 and BCSI Building Component Safety Information** available from Truss Plate Institute, 2670 Crain Highway, Suite 203 Waldorf, MD 20601

ENGINEERING BY TRENCO A MiTek Affiliate
818 Soundside Road
Edenton, NC 27932

Job	Truss	Truss Type	Qty	Ply	DRB HOMES - 89 FaNC
22090048	V4	Valley	1	1	I54559203 Job Reference (optional)

Carter Components (Sanford), Sanford, NC - 27332,

Run: 8.53 S Sep 22 2022 Print: 8.530 S Sep 22 2022 MiTek Industries, Inc. Wed Oct 05 09:11:42 Page: 1
ID:WLgYeg9zPbBytL9tiEbmDnzTR1i-RfC?PsB70Hq3NSgPqnL8w3uITXbGKWrCDoi7J4zJC?f

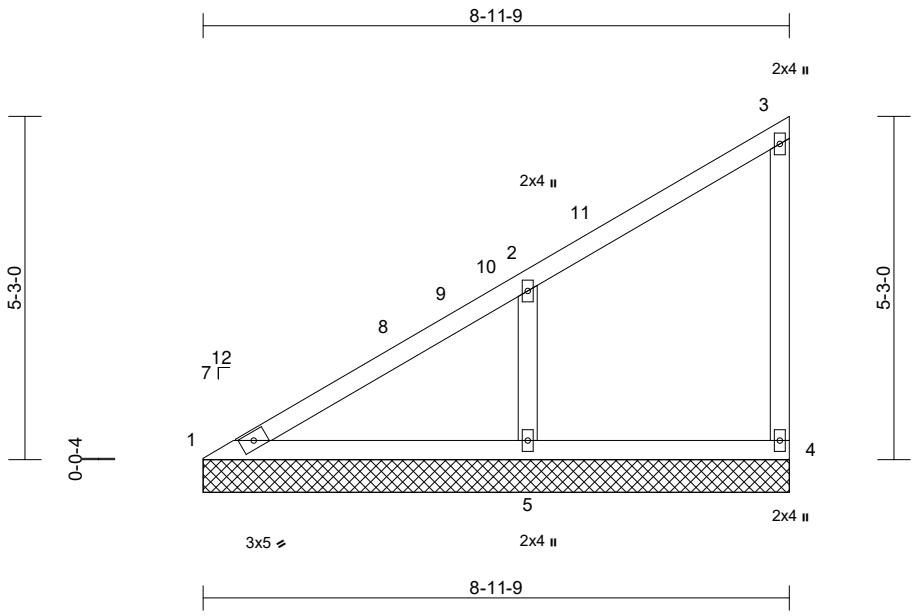

Scale = 1:35.2

Loading	(psf)	Spacing	2-0-0	CSI		DEFL	in	(loc)	l/defl	L/d	PLATES	GRIP
TCLL (roof)	20.0	Plate Grip DOL	1.15	TC	0.38	Vert(LL)	n/a	-	n/a	999	MT20	244/190
Snow (Pf)	20.0	Lumber DOL	1.15	BC	0.23	Vert(TL)	n/a	-	n/a	999		
TCDL	10.0	Rep Stress Incr	YES	WB	0.10	Horiz(TL)	0.00	4	n/a	n/a		
BCLL	0.0 *	Code	IRC2018/TPI2014	Matrix-MP								
BCDL	10.0										Weight: 38 lb	FT = 20%

LUMBER

TOP CHORD	2x4 SP No.2
BOT CHORD	2x4 SP No.2
WEBS	2x4 SP No.3
OTHERS	2x4 SP No.3

BRACING

TOP CHORD	Structural wood sheathing directly applied or 6-0-0 oc purlins, except end verticals.
BOT CHORD	Rigid ceiling directly applied or 10-0-0 oc bracing.

REACTIONS (size) 1=8-11-9, 4=8-11-9, 5=8-11-9
Max Horiz 1=177 (LC 11)
Max Uplift 4=-27 (LC 11), 5=-112 (LC 14)
Max Grav 1=167 (LC 24), 4=165 (LC 20), 5=575 (LC 20)

FORCES (lb) - Maximum Compression/Maximum Tension

TOP CHORD	1-2=-265/128, 2-3=-124/65, 3-4=-144/45
BOT CHORD	1-5=-79/227, 4-5=-79/86
WEBS	2-5=-442/189

NOTES

1) Wind: ASCE 7-16; Vult=130mph (3-second gust) Vasd=103mph; TCDL=6.0psf; BCDL=6.0psf; h=25ft; Cat. II; Exp B; Enclosed; MWFRS (envelope) exterior zone and C-C Exterior(2E) 0-0-7 to 3-0-7, Interior (1) 3-0-7 to 4-7-5, Exterior(2R) 4-7-5 to 8-10-4 zone; cantilever left and right exposed ; end vertical left and right exposed;C-C for members and forces & MWFRS for reactions shown; Lumber DOL=1.60 plate grip DOL=1.60
2) Truss designed for wind loads in the plane of the truss only. For studs exposed to wind (normal to the face), see Standard Industry Gable End Details as applicable, or consult qualified building designer as per ANSI/TPI 1.
3) TCLL: ASCE 7-16; Pr=20.0 psf (roof LL: Lum DOL=1.15 Plate DOL=1.15); Pf=20.0 psf (Lum DOL=1.15 Plate DOL=1.15); Is=1.0; Rough Cat B; Fully Exp.; Ce=0.9; Cs=1.00; Ct=1.10
4) Unbalanced snow loads have been considered for this design.
5) Gable requires continuous bottom chord bearing.
6) Gable studs spaced at 4-0-0 oc.
7) This truss has been designed for a 10.0 psf bottom chord live load nonconcurrent with any other live loads.
8) * This truss has been designed for a live load of 20.0psf on the bottom chord in all areas where a rectangle 3-06-00 tall by 2-00-00 wide will fit between the bottom chord and any other members.
9) Provide mechanical connection (by others) of truss to bearing plate capable of withstanding 27 lb uplift at joint 4 and 112 lb uplift at joint 5.
10) This truss is designed in accordance with the 2018 International Residential Code sections R502.11.1 and R802.10.2 and referenced standard ANSI/TPI 1.

LOAD CASE(S) Standard

October 5,2022

WARNING - Verify design parameters and READ NOTES ON THIS AND INCLUDED MITEK REFERENCE PAGE MII-7473 rev. 5/19/2020 BEFORE USE.
Design valid for use only with MiTek® connectors. This design is based only upon parameters shown, and is for an individual building component, not a truss system. Before use, the building designer must verify the applicability of design parameters and properly incorporate this design into the overall building design. Bracing indicated is to prevent buckling of individual truss web and/or chord members only. Additional temporary and permanent bracing is always required for stability and to prevent collapse with possible personal injury and property damage. For general guidance regarding the fabrication, storage, delivery, erection and bracing of trusses and truss systems, see **ANSI/TPI1 Quality Criteria, DSB-89 and BCSI Building Component Safety Information** available from Truss Plate Institute, 2670 Crain Highway, Suite 203 Waldorf, MD 20601

ENGINEERING BY TRENCO A MiTek Affiliate
818 Soundside Road
Edenton, NC 27932

Job	Truss	Truss Type	Qty	Ply	DRB HOMES - 89 FaNC
22090048	V5	Valley	1	1	I54559204 Job Reference (optional)

Carter Components (Sanford), Sanford, NC - 27332,

Run: 8.53 S Sep 22 2022 Print: 8.530 S Sep 22 2022 MiTek Industries, Inc. Wed Oct 05 09:11:42 Page: 1
ID:VWvwIsFRpZYGWTSD8xEKGOzhpLw-RfC?PsB70Hq3NSgPqnL8w3uITXbGKWrCDoi7J4zJC?f

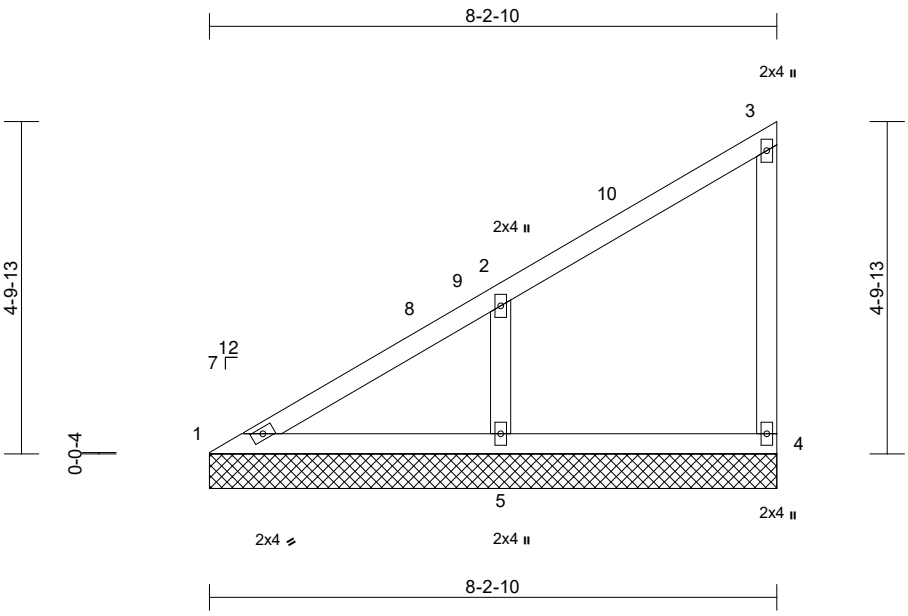

Scale = 1:33.4

Loading	(psf)	Spacing	2-0-0	CSI		DEFL	in	(loc)	l/defl	L/d	PLATES	GRIP
TCLL (roof)	20.0	Plate Grip DOL	1.15	TC	0.34	Vert(LL)	n/a	-	n/a	999	MT20	244/190
Snow (Pf)	20.0	Lumber DOL	1.15	BC	0.15	Vert(TL)	n/a	-	n/a	999		
TCDL	10.0	Rep Stress Incr	YES	WB	0.09	Horiz(TL)	0.00	4	n/a	n/a		
BCLL	0.0*	Code	IRC2018/TPI2014	Matrix-MP								
BCDL	10.0										Weight: 35 lb	FT = 20%

LUMBER

TOP CHORD	2x4 SP No.2
BOT CHORD	2x4 SP No.2
WEBS	2x4 SP No.3
OTHERS	2x4 SP No.3

BRACING

TOP CHORD	Structural wood sheathing directly applied or 6-0-0 oc purlins, except end verticals.
BOT CHORD	Rigid ceiling directly applied or 10-0-0 oc bracing.

REACTIONS (size) 1=8-2-10, 4=8-2-10, 5=8-2-10
Max Horiz 1=161 (LC 11)
Max Uplift 4=-26 (LC 11), 5=-107 (LC 14)
Max Grav 1=142 (LC 24), 4=175 (LC 20), 5=535 (LC 20)

FORCES (lb) - Maximum Compression/Maximum Tension

TOP CHORD	1-2=-220/116, 2-3=-117/58, 3-4=-150/44
BOT CHORD	1-5=-72/181, 4-5=-72/79
WEBS	2-5=-419/186

NOTES

1) Wind: ASCE 7-16; Vult=130mph (3-second gust) Vasd=103mph; TCDL=6.0psf; BCDL=6.0psf; h=25ft; Cat. II; Exp B; Enclosed; MWFRS (envelope) exterior zone and C-C Exterior(2E) 0-0-7 to 3-0-7, Interior (1) 3-0-7 to 3-10-7, Exterior(2R) 3-10-7 to 8-1-5 zone; cantilever left and right exposed ; end vertical left and right exposed;C-C for members and forces & MWFRS for reactions shown; Lumber DOL=1.60 plate grip DOL=1.60
2) Truss designed for wind loads in the plane of the truss only. For studs exposed to wind (normal to the face), see Standard Industry Gable End Details as applicable, or consult qualified building designer as per ANSI/TPI 1.
3) TCLL: ASCE 7-16; Pr=20.0 psf (roof LL: Lum DOL=1.15 Plate DOL=1.15); Pf=20.0 psf (Lum DOL=1.15 Plate DOL=1.15); Is=1.0; Rough Cat B; Fully Exp.; Ce=0.9; Cs=1.00; Ct=1.10
4) Unbalanced snow loads have been considered for this design.
5) Gable requires continuous bottom chord bearing.
6) Gable studs spaced at 4-0-0 oc.
7) This truss has been designed for a 10.0 psf bottom chord live load nonconcurrent with any other live loads.
8) * This truss has been designed for a live load of 20.0psf on the bottom chord in all areas where a rectangle 3-06-00 tall by 2-00-00 wide will fit between the bottom chord and any other members.
9) Provide mechanical connection (by others) of truss to bearing plate capable of withstanding 26 lb uplift at joint 4 and 107 lb uplift at joint 5.
10) This truss is designed in accordance with the 2018 International Residential Code sections R502.11.1 and R802.10.2 and referenced standard ANSI/TPI 1.

LOAD CASE(S) Standard

October 5,2022

WARNING - Verify design parameters and READ NOTES ON THIS AND INCLUDED MITEK REFERENCE PAGE MII-7473 rev. 5/19/2020 BEFORE USE.
Design valid for use only with MiTek® connectors. This design is based only upon parameters shown, and is for an individual building component, not a truss system. Before use, the building designer must verify the applicability of design parameters and properly incorporate this design into the overall building design. Bracing indicated is to prevent buckling of individual truss web and/or chord members only. Additional temporary and permanent bracing is always required for stability and to prevent collapse with possible personal injury and property damage. For general guidance regarding the fabrication, storage, delivery, erection and bracing of trusses and truss systems, see **ANSI/TPI1 Quality Criteria, DSB-89 and BCSI Building Component Safety Information** available from Truss Plate Institute, 2670 Crain Highway, Suite 203 Waldorf, MD 20601

ENGINEERING BY TRENCO A MiTek Affiliate
818 Soundside Road
Edenton, NC 27932

Job	Truss	Truss Type	Qty	Ply	DRB HOMES - 89 FaNC
22090048	V6	Valley	1	1	I54559205 Job Reference (optional)

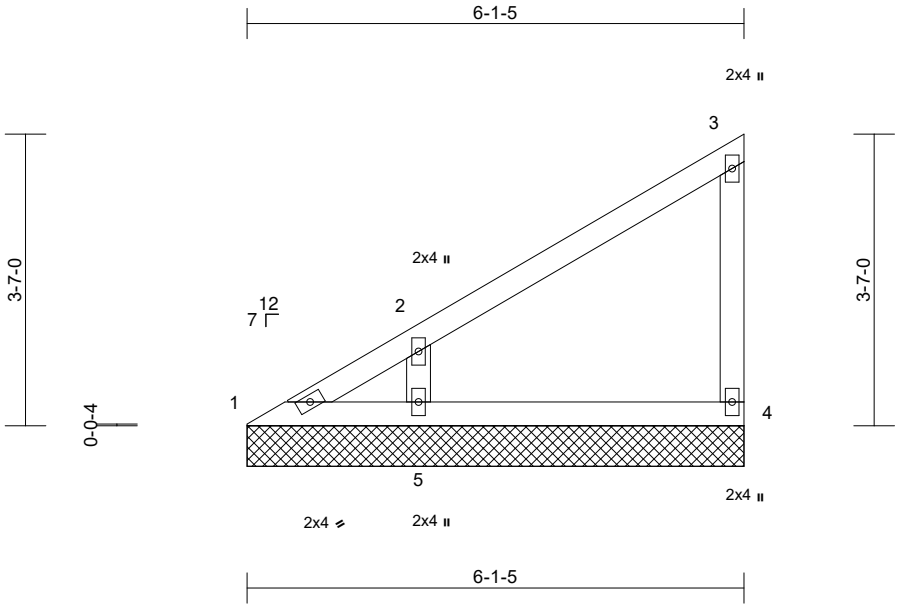

Scale = 1:28.3

Loading	(psf)	Spacing	2-0-0	CSI		DEFL	in	(loc)	l/defl	L/d	PLATES	GRIP
TCLL (roof)	20.0	Plate Grip DOL	1.15	TC	0.31	Vert(LL)	n/a	-	n/a	999	MT20	244/190
Snow (Pf)	20.0	Lumber DOL	1.15	BC	0.12	Vert(TL)	n/a	-	n/a	999		
TCDL	10.0	Rep Stress Incr	YES	WB	0.08	Horiz(TL)	0.00	4	n/a	n/a		
BCLL	0.0*	Code	IRC2018/TPI2014	Matrix-MP								
BCDL	10.0										Weight: 24 lb	FT = 20%

LUMBER

TOP CHORD 2x4 SP No.2
BOT CHORD 2x4 SP No.2
WEBS 2x4 SP No.3
OTHERS 2x4 SP No.3

BRACING

TOP CHORD Structural wood sheathing directly applied or 6-0-0 oc purlins, except end verticals.
BOT CHORD Rigid ceiling directly applied or 10-0-0 oc bracing.

REACTIONS (size) 1=6-1-5, 4=6-1-5, 5=6-1-5
Max Horiz 1=117 (LC 11)
Max Uplift 1=-12 (LC 10), 4=-24 (LC 14), 5=-90 (LC 14)
Max Grav 1=55 (LC 24), 4=186 (LC 20), 5=462 (LC 20)

FORCES (lb) - Maximum Compression/Maximum Tension
TOP CHORD 1-2=-106/99, 2-3=-114/58, 3-4=-153/42
BOT CHORD 1-5=-54/59, 4-5=-54/59
WEBS 2-5=-415/211

NOTES

1) Wind: ASCE 7-16; Vult=130mph (3-second gust) Vasd=103mph; TCDL=6.0psf; BCDL=6.0psf; h=25ft; Cat. II; Exp B; Enclosed; MWFRS (envelope) exterior zone and C-C Exterior(2E) zone; cantilever left and right exposed ; end vertical left and right exposed;C-C for members and forces & MWFRS for reactions shown; Lumber DOL=1.60 plate grip DOL=1.60
2) Truss designed for wind loads in the plane of the truss only. For studs exposed to wind (normal to the face), see Standard Industry Gable End Details as applicable, or consult qualified building designer as per ANSI/TPI 1.
3) TCLL: ASCE 7-16; Pr=20.0 psf (roof LL: Lum DOL=1.15 Plate DOL=1.15); Pf=20.0 psf (Lum DOL=1.15 Plate DOL=1.15); Is=1.0; Rough Cat B; Fully Exp.; Ce=0.9; Cs=1.00; Ct=1.10
4) Unbalanced snow loads have been considered for this design.
5) Gable requires continuous bottom chord bearing.
6) Gable studs spaced at 4-0-0 oc.
7) This truss has been designed for a 10.0 psf bottom chord live load nonconcurrent with any other live loads.
8) * This truss has been designed for a live load of 20.0psf on the bottom chord in all areas where a rectangle 3-06-00 tall by 2-00-00 wide will fit between the bottom chord and any other members.
9) Provide mechanical connection (by others) of truss to bearing plate capable of withstanding 24 lb uplift at joint 4, 12 lb uplift at joint 1 and 90 lb uplift at joint 5.
10) This truss is designed in accordance in with the 2018 International Residential Code sections R502.11.1 and R802.10.2 and referenced standard ANSI/TPI 1.

LOAD CASE(S) Standard

October 5,2022

WARNING - Verify design parameters and READ NOTES ON THIS AND INCLUDED MITEK REFERENCE PAGE MII-7473 rev. 5/19/2020 BEFORE USE.
Design valid for use only with MiTek® connectors. This design is based only upon parameters shown, and is for an individual building component, not a truss system. Before use, the building designer must verify the applicability of design parameters and properly incorporate this design into the overall building design. Bracing indicated is to prevent buckling of individual truss web and/or chord members only. Additional temporary and permanent bracing is always required for stability and to prevent collapse with possible personal injury and property damage. For general guidance regarding the fabrication, storage, delivery, erection and bracing of trusses and truss systems, see **ANSI/TPI1 Quality Criteria, DSB-89 and BCSI Building Component Safety Information** available from Truss Plate Institute, 2670 Crain Highway, Suite 203 Waldorf, MD 20601

ENGINEERING BY TRENCO A MiTek Affiliate
818 Soundside Road
Edenton, NC 27932

Job	Truss	Truss Type	Qty	Ply	DRB HOMES - 89 FaNC
22090048	V7	Valley	1	1	I54559206 Job Reference (optional)

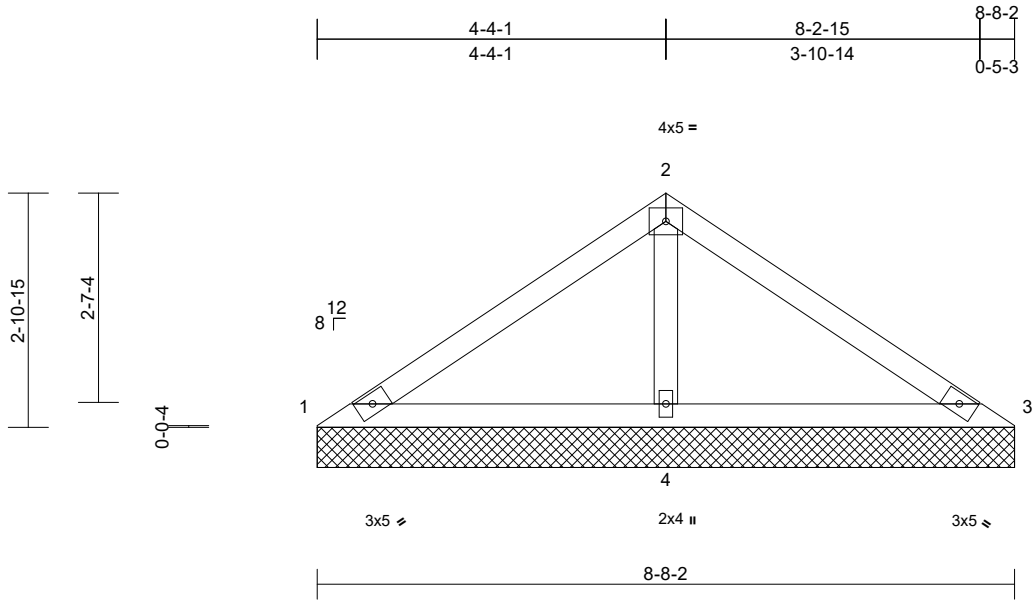

Scale = 1:28.7

Loading	(psf)	Spacing	2-0-0	CSI		DEFL	in	(loc)	l/defl	L/d	PLATES	GRIP
TCLL (roof)	20.0	Plate Grip DOL	1.15	TC	0.38	Vert(LL)	n/a	-	n/a	999	MT20	244/190
Snow (Pf)	20.0	Lumber DOL	1.15	BC	0.37	Vert(TL)	n/a	-	n/a	999		
TCDL	10.0	Rep Stress Incr	YES	WB	0.11	Horiz(TL)	0.00	4	n/a	n/a		
BCLL	0.0*	Code	IRC2018/TPI2014	Matrix-MP								
BCDL	10.0										Weight: 30 lb	FT = 20%

LUMBER
TOP CHORD 2x4 SP No.2
BOT CHORD 2x4 SP No.2
OTHERS 2x4 SP No.3

BRACING
TOP CHORD Structural wood sheathing directly applied or 8-8-2 oc purlins.
BOT CHORD Rigid ceiling directly applied or 6-0-0 oc bracing.

REACTIONS (size) 1=8-8-2, 3=8-8-2, 4=8-8-2
Max Horiz 1=-64 (LC 10)
Max Uplift 1=-40 (LC 21), 3=-40 (LC 20), 4=-76 (LC 14)
Max Grav 1=104 (LC 20), 3=104 (LC 21), 4=676 (LC 21)

FORCES (lb) - Maximum Compression/Maximum Tension
TOP CHORD 1-2=-109/336, 2-3=-109/336
BOT CHORD 1-4=-228/161, 3-4=-228/161
WEBS 2-4=-501/208

NOTES
1) Unbalanced roof live loads have been considered for this design.
2) Wind: ASCE 7-16; Vult=130mph (3-second gust) Vasd=103mph; TCDL=6.0psf; BCDL=6.0psf; h=25ft; Cat. II; Exp B; Enclosed; MWFRS (envelope) exterior zone and C-C Exterior(2E) 0-0-6 to 3-0-6, Exterior(2R) 3-0-6 to 5-8-8, Exterior(2E) 5-8-8 to 8-8-8 zone; cantilever left and right exposed ; end vertical left and right exposed;C-C for members and forces & MWFRS for reactions shown; Lumber DOL=1.60 plate grip DOL=1.60
3) Truss designed for wind loads in the plane of the truss only. For studs exposed to wind (normal to the face), see Standard Industry Gable End Details as applicable, or consult qualified building designer as per ANSI/TPI 1.
4) TCLL: ASCE 7-16; Pr=20.0 psf (roof LL: Lum DOL=1.15 Plate DOL=1.15); Pf=20.0 psf (Lum DOL=1.15 Plate DOL=1.15); Is=1.0; Rough Cat B; Fully Exp.; Ce=0.9; Cs=1.00; Ct=1.10
5) Unbalanced snow loads have been considered for this design.
6) Gable requires continuous bottom chord bearing.
7) Gable studs spaced at 4-0-0 oc.
8) This truss has been designed for a 10.0 psf bottom chord live load nonconcurrent with any other live loads.
9) * This truss has been designed for a live load of 20.0psf on the bottom chord in all areas where a rectangle 3-06-00 tall by 2-00-00 wide will fit between the bottom chord and any other members.
10) Provide mechanical connection (by others) of truss to bearing plate capable of withstanding 40 lb uplift at joint 1, 40 lb uplift at joint 3 and 76 lb uplift at joint 4.
11) This truss is designed in accordance with the 2018 International Residential Code sections R502.11.1 and R802.10.2 and referenced standard ANSI/TPI 1.

LOAD CASE(S) Standard

October 5,2022

WARNING - Verify design parameters and READ NOTES ON THIS AND INCLUDED MITEK REFERENCE PAGE MII-7473 rev. 5/19/2020 BEFORE USE.
Design valid for use only with MiTek® connectors. This design is based only upon parameters shown, and is for an individual building component, not a truss system. Before use, the building designer must verify the applicability of design parameters and properly incorporate this design into the overall building design. Bracing indicated is to prevent buckling of individual truss web and/or chord members only. Additional temporary and permanent bracing is always required for stability and to prevent collapse with possible personal injury and property damage. For general guidance regarding the fabrication, storage, delivery, erection and bracing of trusses and truss systems, see **ANSI/TPI1 Quality Criteria, DSB-89 and BCSI Building Component Safety Information** available from Truss Plate Institute, 2670 Crain Highway, Suite 203 Waldorf, MD 20601

ENGINEERING BY TRENCO A MiTek Affiliate
818 Soundside Road
Edenton, NC 27932

Job	Truss	Truss Type	Qty	Ply	DRB HOMES - 89 FaNC
22090048	V8	Valley	1	1	I54559207 Job Reference (optional)

Carter Components (Sanford), Sanford, NC - 27332,

Run: 8.53 S Sep 22 2022 Print: 8.530 S Sep 22 2022 MiTek Industries, Inc. Wed Oct 05 09:11:43 Page: 1
ID:BJweuyr2dKwhU0kO5sRv9pzG_Fp-RfC?PsB70Hq3NSgPqnL8w3uITXbGKWrCDoi7J4zJC?f

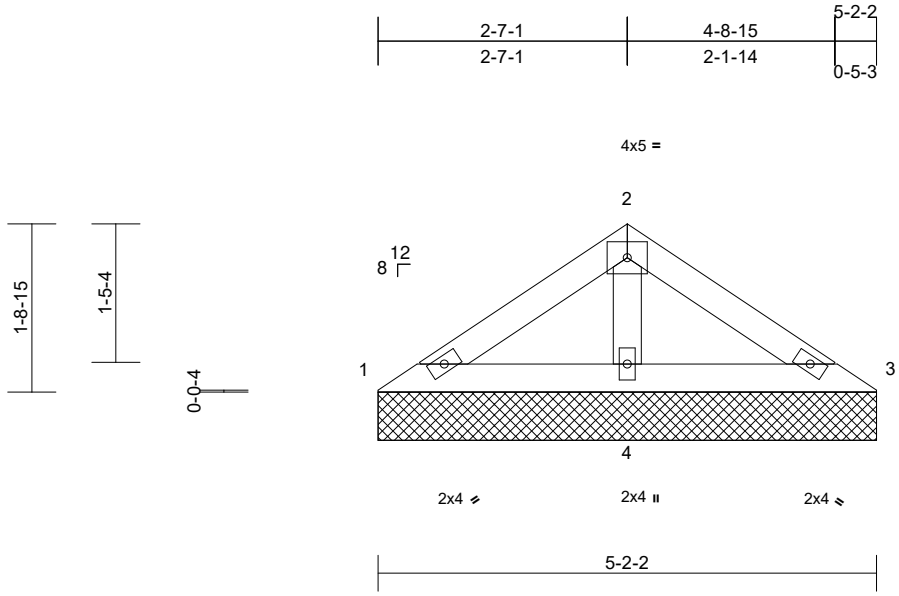

Scale = 1:23.9

Loading	(psf)	Spacing	2-0-0	CSI		DEFL	in	(loc)	l/defl	L/d	PLATES	GRIP
TCLL (roof)	20.0	Plate Grip DOL	1.15	TC	0.09	Vert(LL)	n/a	-	n/a	999	MT20	244/190
Snow (Pf)	20.0	Lumber DOL	1.15	BC	0.12	Vert(TL)	n/a	-	n/a	999		
TCDL	10.0	Rep Stress Incr	YES	WB	0.04	Horiz(TL)	0.00	4	n/a	n/a		
BCLL	0.0 *	Code	IRC2018/TPI2014	Matrix-MP								
BCDL	10.0										Weight: 17 lb	FT = 20%

LUMBER
TOP CHORD 2x4 SP No.2
BOT CHORD 2x4 SP No.2
OTHERS 2x4 SP No.3

BRACING
TOP CHORD Structural wood sheathing directly applied or 5-2-2 oc purlins.
BOT CHORD Rigid ceiling directly applied or 6-0-0 oc bracing.

REACTIONS (size) 1=5-2-2, 3=5-2-2, 4=5-2-2
Max Horiz 1=-37 (LC 10)
Max Uplift 1=-5 (LC 14), 3=-11 (LC 15), 4=-28 (LC 14)
Max Grav 1=90 (LC 20), 3=90 (LC 21), 4=314 (LC 20)

FORCES (lb) - Maximum Compression/Maximum Tension
TOP CHORD 1-2=-88/120, 2-3=-88/120
BOT CHORD 1-4=-91/83, 3-4=-91/83
WEBS 2-4=-196/100

NOTES
1) Unbalanced roof live loads have been considered for this design.
2) Wind: ASCE 7-16; Vult=130mph (3-second gust) Vasd=103mph; TCDL=6.0psf; BCDL=6.0psf; h=25ft; Cat. II; Exp B; Enclosed; MWFRS (envelope) exterior zone and C-C Exterior(2E) zone; cantilever left and right exposed ; end vertical left and right exposed;C-C for members and forces & MWFRS for reactions shown; Lumber DOL=1.60 plate grip DOL=1.60
3) Truss designed for wind loads in the plane of the truss only. For studs exposed to wind (normal to the face), see Standard Industry Gable End Details as applicable, or consult qualified building designer as per ANSI/TPI 1.
4) TCLL: ASCE 7-16; Pr=20.0 psf (roof LL: Lum DOL=1.15 Plate DOL=1.15); Pf=20.0 psf (Lum DOL=1.15 Plate DOL=1.15); Is=1.0; Rough Cat B; Fully Exp.; Ce=0.9; Cs=1.00; Ct=1.10
5) Unbalanced snow loads have been considered for this design.
6) Gable requires continuous bottom chord bearing.
7) Gable studs spaced at 4-0-0 oc.
8) This truss has been designed for a 10.0 psf bottom chord live load nonconcurrent with any other live loads.
9) * This truss has been designed for a live load of 20.0psf on the bottom chord in all areas where a rectangle 3-06-00 tall by 2-00-00 wide will fit between the bottom chord and any other members.
10) Provide mechanical connection (by others) of truss to bearing plate capable of withstanding 5 lb uplift at joint 1, 11 lb uplift at joint 3 and 28 lb uplift at joint 4.
11) This truss is designed in accordance with the 2018 International Residential Code sections R502.11.1 and R802.10.2 and referenced standard ANSI/TPI 1.

LOAD CASE(S) Standard

October 5,2022

WARNING - Verify design parameters and READ NOTES ON THIS AND INCLUDED MITEK REFERENCE PAGE MII-7473 rev. 5/19/2020 BEFORE USE.
Design valid for use only with MiTek® connectors. This design is based only upon parameters shown, and is for an individual building component, not a truss system. Before use, the building designer must verify the applicability of design parameters and properly incorporate this design into the overall building design. Bracing indicated is to prevent buckling of individual truss web and/or chord members only. Additional temporary and permanent bracing is always required for stability and to prevent collapse with possible personal injury and property damage. For general guidance regarding the fabrication, storage, delivery, erection and bracing of trusses and truss systems, see **ANSI/TPI1 Quality Criteria, DSB-89 and BCSI Building Component Safety Information** available from Truss Plate Institute, 2670 Crain Highway, Suite 203 Waldorf, MD 20601

ENGINEERING BY TRENCO A MiTek Affiliate
818 Soundside Road
Edenton, NC 27932

Symbols

PLATE LOCATION AND ORIENTATION

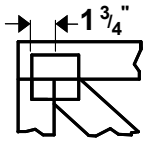

Center plate on joint unless x, y offsets are indicated. Dimensions are in ft-in-sixteenths. Apply plates to both sides of truss and fully embed teeth.

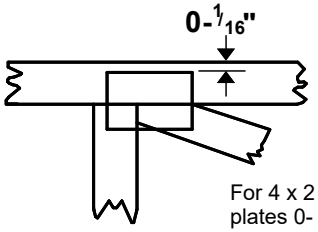

For 4 x 2 orientation, locate plates 0- 1/16" from outside edge of truss.

This symbol indicates the required direction of slots in connector plates.

*** Plate location details available in MiTek 20/20 software or upon request.**

PLATE SIZE

4 x 4

The first dimension is the plate width measured perpendicular to slots. Second dimension is the length parallel to slots.

LATERAL BRACING LOCATION

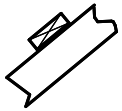

Indicated by symbol shown and/or by text in the bracing section of the output. Use T or I bracing if indicated.

BEARING

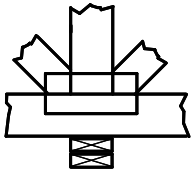

Indicates location where bearings (supports) occur. Icons vary but reaction section indicates joint number where bearings occur. Min size shown is for crushing only.

Industry Standards:

ANSI/TPI1: National Design Specification for Metal Plate Connected Wood Truss Construction.
DSB-89: Design Standard for Bracing.
BCSI: Building Component Safety Information, Guide to Good Practice for Handling, Installing & Bracing of Metal Plate Connected Wood Trusses.

Numbering System

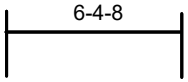

dimensions shown in ft-in-sixteenths
(Drawings not to scale)

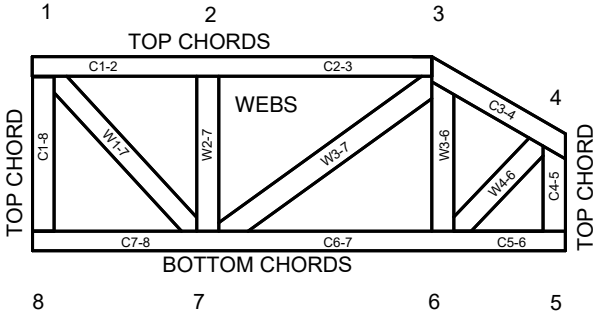

JOINTS ARE GENERALLY NUMBERED/LETTERED CLOCKWISE AROUND THE TRUSS STARTING AT THE JOINT FARTHEST TO THE LEFT.

CHORDS AND WEBS ARE IDENTIFIED BY END JOINT NUMBERS/LETTERS.

PRODUCT CODE APPROVALS

ICC-ES Reports:

ESR-1311, ESR-1352, ESR1988
ER-3907, ESR-2362, ESR-1397, ESR-3282

Trusses are designed for wind loads in the plane of the truss unless otherwise shown.

Lumber design values are in accordance with ANSI/TPI 1 section 6.3 These truss designs rely on lumber values established by others.

© 2012 MiTek® All Rights Reserved

MiTek

ENGINEERING BY TRENCO
A MiTek Affiliate

MiTek Engineering Reference Sheet: MII-7473 rev. 5/19/2020

General Safety Notes

Failure to Follow Could Cause Property Damage or Personal Injury

1. Additional stability bracing for truss system, e.g. diagonal or X-bracing, is always required. See BCSI.
2. Truss bracing must be designed by an engineer. For wide truss spacing, individual lateral braces themselves may require bracing, or alternative Tor I bracing should be considered.
3. Never exceed the design loading shown and never stack materials on inadequately braced trusses.
4. Provide copies of this truss design to the building designer, erection supervisor, property owner and all other interested parties.
5. Cut members to bear tightly against each other.
6. Place plates on each face of truss at each joint and embed fully. Knots and wane at joint locations are regulated by ANSI/TPI 1.
7. Design assumes trusses will be suitably protected from the environment in accord with ANSI/TPI 1.
8. Unless otherwise noted, moisture content of lumber shall not exceed 19% at time of fabrication.
9. Unless expressly noted, this design is not applicable for use with fire retardant, preservative treated, or green lumber.
10. Camber is a non-structural consideration and is the responsibility of truss fabricator. General practice is to camber for dead load deflection.
11. Plate type, size, orientation and location dimensions indicated are minimum plating requirements.
12. Lumber used shall be of the species and size, and in all respects, equal to or better than that specified.
13. Top chords must be sheathed or purlins provided at spacing indicated on design.
14. Bottom chords require lateral bracing at 10 ft. spacing, or less, if no ceiling is installed, unless otherwise noted.
15. Connections not shown are the responsibility of others.
16. Do not cut or alter truss member or plate without prior approval of an engineer.
17. Install and load vertically unless indicated otherwise.
18. Use of green or treated lumber may pose unacceptable environmental, health or performance risks. Consult with project engineer before use.
19. Review all portions of this design (front, back, words and pictures) before use. Reviewing pictures alone is not sufficient.
20. Design assumes manufacture in accordance with ANSI/TPI 1 Quality Criteria.
21. The design does not take into account any dynamic or other loads other than those expressly stated.