ENGINEERING BY TRENCO
A MiTek Affiliate

Trenco
818 Soundside Rd
Edenton, NC 27932

Re: 150_1910_C2
KB Home 150.1910 C2

The truss drawing(s) referenced below have been prepared by Truss Engineering Co. under my direct supervision based on the parameters provided by 84 Components - #2383.

Pages or sheets covered by this seal: I44899783 thru I44899817

My license renewal date for the state of North Carolina is December 31, 2021.

North Carolina COA: C-0844

NORTH CAROLINA PROFESSIONAL SEAL 044925 ENGINEER SCOTT M. SEVIER

February 22,2021

Sevier, Scott

IMPORTANT NOTE: The seal on these truss component designs is a certification that the engineer named is licensed in the jurisdiction(s) identified and that the designs comply with ANSI/TPI 1. These designs are based upon parameters shown (e.g., loads, supports, dimensions, shapes and design codes), which were given to MiTek or TRENCO. Any project specific information included is for MiTek's or TRENCO's customers file reference purpose only, and was not taken into account in the preparation of these designs. MiTek or TRENCO has not independently verified the applicability of the design parameters or the designs for any particular building. Before use, the building designer should verify applicability of design parameters and properly incorporate these designs into the overall building design per ANSI/TPI 1, Chapter 2.

Job	Truss	Truss Type	Qty	Ply	KB Home 150.1910 C2
150_1910_C2	A1	Common	1	1	I44899783 Job Reference (optional)

84 Components (Dunn), Dunn, NC - 28334, 8.430 s Feb 12 2021 MiTek Industries, Inc. Mon Feb 22 09:03:46 2021 Page 1
ID:VMD62rz1yiHD_OqRtbnrlFztQ8K-DictYIA1bDkD9QRKmVo9wDMUUV4hjXR2jg_ZZwzidsh

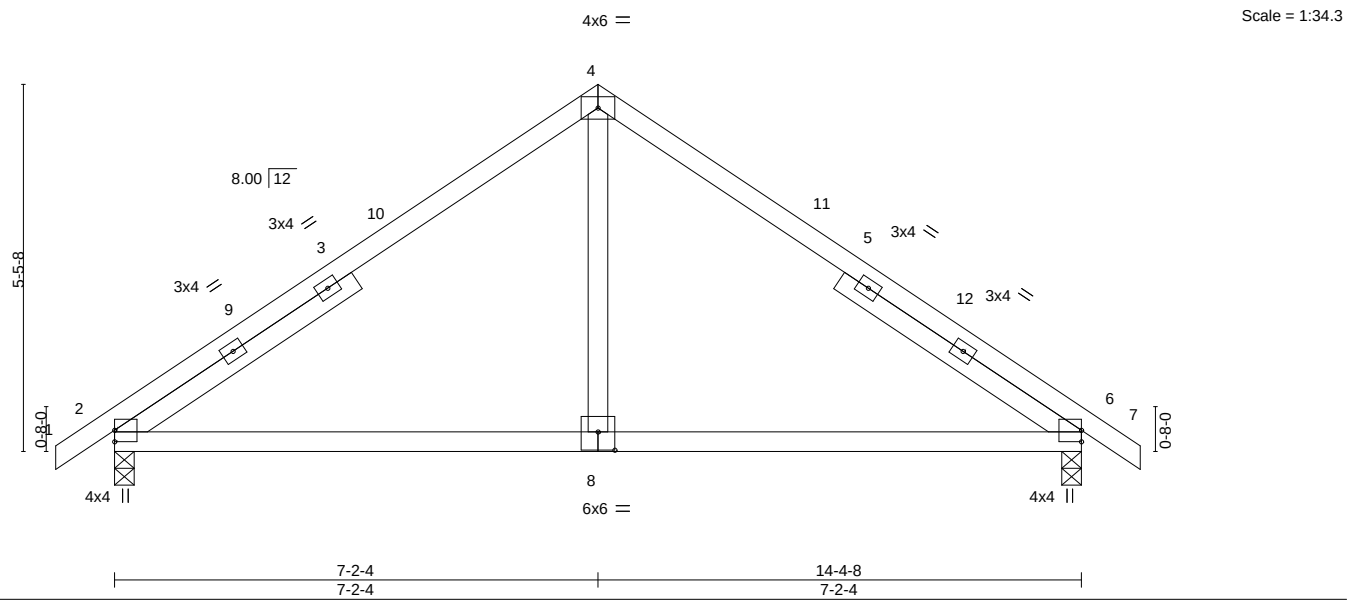

Plate Offsets (X,Y)-- [8:0-3-0,0-3-4]

LOADING (psf)		SPACING-	2-0-0	CSI.		DEFL.	in	(loc)	l/defl	L/d	PLATES	GRIP
TCLL (roof)	20.0	Plate Grip DOL	1.15	TC	0.78	Vert(LL)	-0.05	6-8	>999	240	MT20	197/144
Snow (Pf/Pg)	11.6/15.0	Lumber DOL	1.15	BC	0.53	Vert(CT)	-0.11	6-8	>999	180		
TCDL	10.0	Rep Stress Incr	YES	WB	0.13	Horz(CT)	0.01	6	n/a	n/a		
BCLL	0.0 *	Code IRC2015/TPI2014		Matrix-S							Weight: 71 lb	FT = 20%
BCDL	10.0											

LUMBER-
TOP CHORD 2x4 SP No.2 or 2x4 SPF No.2
BOT CHORD 2x4 SP No.2 or 2x4 SPF No.2
WEBS 2x4 SP No.3
SLIDER Left 2x4 SP No.3 -t 4-2-15, Right 2x4 SP No.3 -t 4-2-15

BRACING-
TOP CHORD Structural wood sheathing directly applied or 4-7-1 oc purlins.
BOT CHORD Rigid ceiling directly applied or 10-0-0 oc bracing.

REACTIONS. (size) 2=0-3-8, 6=0-3-8
Max Horz 2=113(LC 13)
Max Uplift 2=-40(LC 14), 6=-40(LC 15)
Max Grav 2=628(LC 2), 6=627(LC 2)

FORCES. (lb) - Max. Comp./Max. Ten. - All forces 250 (lb) or less except when shown.
TOP CHORD 2-4=-682/67, 4-6=-682/67
BOT CHORD 2-8=0/454, 6-8=0/454
WEBS 4-8=0/336

NOTES-
1) Unbalanced roof live loads have been considered for this design.
2) Wind: ASCE 7-10; Vult=120mph Vasd=95mph; TCDL=6.0psf; BCDL=6.0psf; h=25ft; Cat. II; Exp B; Enclosed; MWFRS (envelope) gable end zone and C-C Exterior(2) -0-10-8 to 2-1-8, Interior(1) 2-1-8 to 7-2-4, Exterior(2) 7-2-4 to 10-2-4, Interior(1) 10-2-4 to 15-3-0 zone;C-C for members and forces & MWFRS for reactions shown; Lumber DOL=1.60 plate grip DOL=1.60
3) TCLL: ASCE 7-10; Pr=20.0 psf (roof live load: Lumber DOL=1.15 Plate DOL=1.15); Pg=15.0 psf (ground snow); Pf=11.6 psf (flat roof snow: Lumber DOL=1.15 Plate DOL=1.15); Category II; Exp B; Partially Exp.; Ct=1.10
4) This truss has been designed for greater of min roof live load of 12.0 psf or 1.00 times flat roof load of 11.6 psf on overhangs non-concurrent with other live loads.
5) This truss has been designed for a 10.0 psf bottom chord live load nonconcurrent with any other live loads.
6) * This truss has been designed for a live load of 20.0psf on the bottom chord in all areas where a rectangle 3-6-0 tall by 2-0-0 wide will fit between the bottom chord and any other members.
7) One H2.5A Simpson Strong-Tie connectors recommended to connect truss to bearing walls due to UPLIFT at jt(s) 2 and 6. This connection is for uplift only and does not consider lateral forces.

February 22,2021

WARNING - Verify design parameters and READ NOTES ON THIS AND INCLUDED MITEK REFERENCE PAGE MII-7473 rev. 5/19/2020 BEFORE USE.
Design valid for use only with MiTek® connectors. This design is based only upon parameters shown, and is for an individual building component, not a truss system. Before use, the building designer must verify the applicability of design parameters and properly incorporate this design into the overall building design. Bracing indicated is to prevent buckling of individual truss web and/or chord members only. Additional temporary and permanent bracing is always required for stability and to prevent collapse with possible personal injury and property damage. For general guidance regarding the fabrication, storage, delivery, erection and bracing of trusses and truss systems, see **ANSI/TPI1 Quality Criteria, DSB-89 and BCSI Building Component Safety Information** available from Truss Plate Institute, 2670 Crain Highway, Suite 203 Waldorf, MD 20601

ENGINEERING BY TRENCO A MiTek Affiliate
818 Soundside Road
Edenton, NC 27932

Job	Truss	Truss Type	Qty	Ply	KB Home 150.1910 C2
150_1910_C2	A2	Common	3	1	I44899784 Job Reference (optional)

84 Components (Dunn), Dunn, NC - 28334, 8.430 s Feb 12 2021 MiTek Industries, Inc. Mon Feb 22 09:03:48 2021 Page 1
ID:VMD62rz1yiHD_OqRtbnrlFztQ8K-95kez_CH6q_xPkbjuwqd?eSqTJl6BQwLB_Tgdozidsf

Scale = 1:34.0

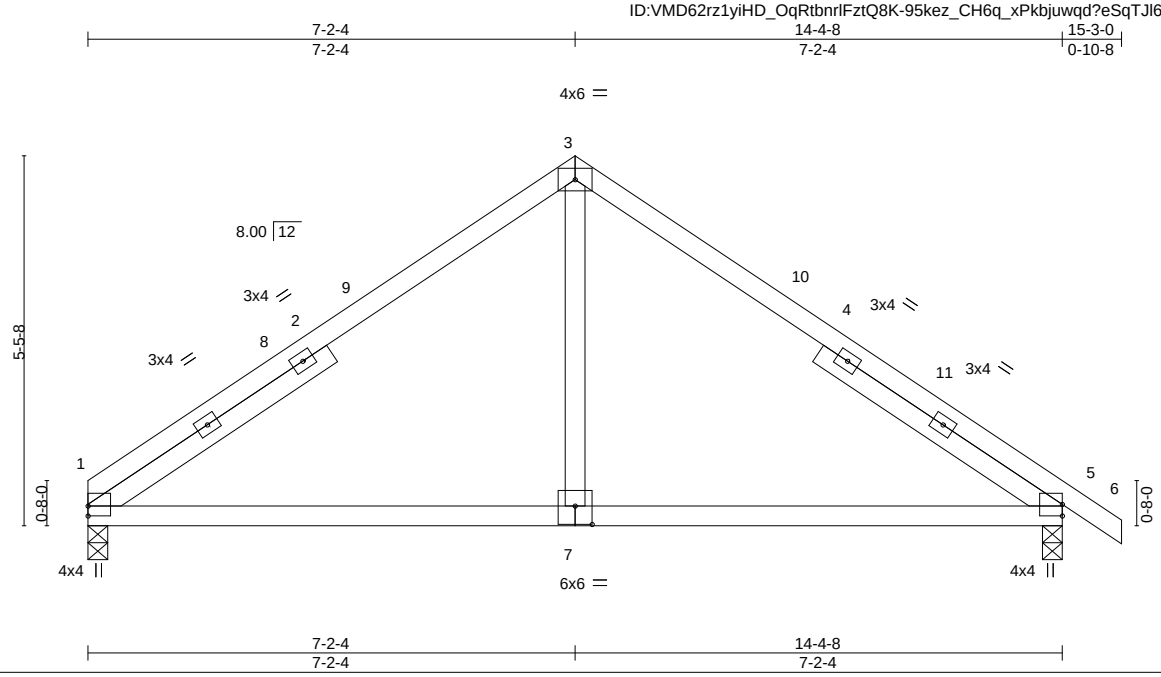

Plate Offsets (X,Y)-- [7:0-3-0,0-3-4]

LOADING (psf)		SPACING-	2-0-0	CSI.		DEFL.	in	(loc)	l/defl	L/d	PLATES	GRIP
TCLL (roof)	20.0	Plate Grip DOL	1.15	TC	0.82	Vert(LL)	-0.06	1-7	>999	240	MT20	197/144
Snow (Pf/Pg)	11.6/15.0	Lumber DOL	1.15	BC	0.53	Vert(CT)	-0.12	1-7	>999	180		
TCDL	10.0	Rep Stress Incr	YES	WB	0.13	Horz(CT)	0.01	5	n/a	n/a		
BCLL	0.0 *	Code IRC2015/TPI2014		Matrix-S							Weight: 69 lb	FT = 20%
BCDL	10.0											

LUMBER-
TOP CHORD 2x4 SP No.2 or 2x4 SPF No.2
BOT CHORD 2x4 SP No.2 or 2x4 SPF No.2
WEBS 2x4 SP No.3
SLIDER Left 2x4 SP No.3 -t 4-2-15, Right 2x4 SP No.3 -t 4-2-15

BRACING-
TOP CHORD Structural wood sheathing directly applied or 3-7-9 oc purlins.
BOT CHORD Rigid ceiling directly applied or 10-0-0 oc bracing.

REACTIONS. (size) 1=0-3-8, 5=0-3-8
Max Horz 1=-112(LC 10)
Max Uplift 1=-25(LC 14), 5=-40(LC 15)
Max Grav 1=573(LC 2), 5=629(LC 2)

FORCES. (lb) - Max. Comp./Max. Ten. - All forces 250 (lb) or less except when shown.
TOP CHORD 1-3=-658/69, 3-5=-659/67
BOT CHORD 1-7=0/457, 5-7=0/457
WEBS 3-7=0/337

NOTES-
1) Unbalanced roof live loads have been considered for this design.
2) Wind: ASCE 7-10; Vult=120mph Vasd=95mph; TCDL=6.0psf; BCDL=6.0psf; h=25ft; Cat. II; Exp B; Enclosed; MWFRS (envelope) gable end zone and C-C Exterior(2) 0-0-0 to 3-0-0, Interior(1) 3-0-0 to 7-2-4, Exterior(2) 7-2-4 to 10-2-4, Interior(1) 10-2-4 to 15-3-0 zone;C-C for members and forces & MWFRS for reactions shown; Lumber DOL=1.60 plate grip DOL=1.60
3) TCLL: ASCE 7-10; Pr=20.0 psf (roof live load: Lumber DOL=1.15 Plate DOL=1.15); Pg=15.0 psf (ground snow); Pf=11.6 psf (flat roof snow: Lumber DOL=1.15 Plate DOL=1.15); Category II; Exp B; Partially Exp.; Ct=1.10
4) This truss has been designed for greater of min roof live load of 12.0 psf or 1.00 times flat roof load of 11.6 psf on overhangs non-concurrent with other live loads.
5) This truss has been designed for a 10.0 psf bottom chord live load nonconcurrent with any other live loads.
6) * This truss has been designed for a live load of 20.0psf on the bottom chord in all areas where a rectangle 3-6-0 tall by 2-0-0 wide will fit between the bottom chord and any other members.
7) One RT7A USP connectors recommended to connect truss to bearing walls due to UPLIFT at jt(s) 1 and 5. This connection is for uplift only and does not consider lateral forces.

February 22,2021

WARNING - Verify design parameters and READ NOTES ON THIS AND INCLUDED MITEK REFERENCE PAGE MII-7473 rev. 5/19/2020 BEFORE USE.
Design valid for use only with MiTek® connectors. This design is based only upon parameters shown, and is for an individual building component, not a truss system. Before use, the building designer must verify the applicability of design parameters and properly incorporate this design into the overall building design. Bracing indicated is to prevent buckling of individual truss web and/or chord members only. Additional temporary and permanent bracing is always required for stability and to prevent collapse with possible personal injury and property damage. For general guidance regarding the fabrication, storage, delivery, erection and bracing of trusses and truss systems, see **ANSI/TPI1 Quality Criteria, DSB-89 and BCSI Building Component Safety Information** available from Truss Plate Institute, 2670 Crain Highway, Suite 203 Waldorf, MD 20601

ENGINEERING BY TRENCO A MiTek Affiliate
818 Soundside Road
Edenton, NC 27932

Job	Truss	Truss Type	Qty	Ply	KB Home 150.1910 C2
150_1910_C2	AE	Common Supported Gable	1	1	I44899785 Job Reference (optional)

84 Components (Dunn), Dunn, NC - 28334, 8.430 s Feb 12 2021 MiTek Industries, Inc. Mon Feb 22 09:03:49 2021 Page 1
ID:VMD62rz1yiHD_OqRtbnrlFztQ8K-dHH0AKDvt86o1tAvSdLsYr_BBjDBwvMUPeDEAFzidse

Scale = 1:34.3

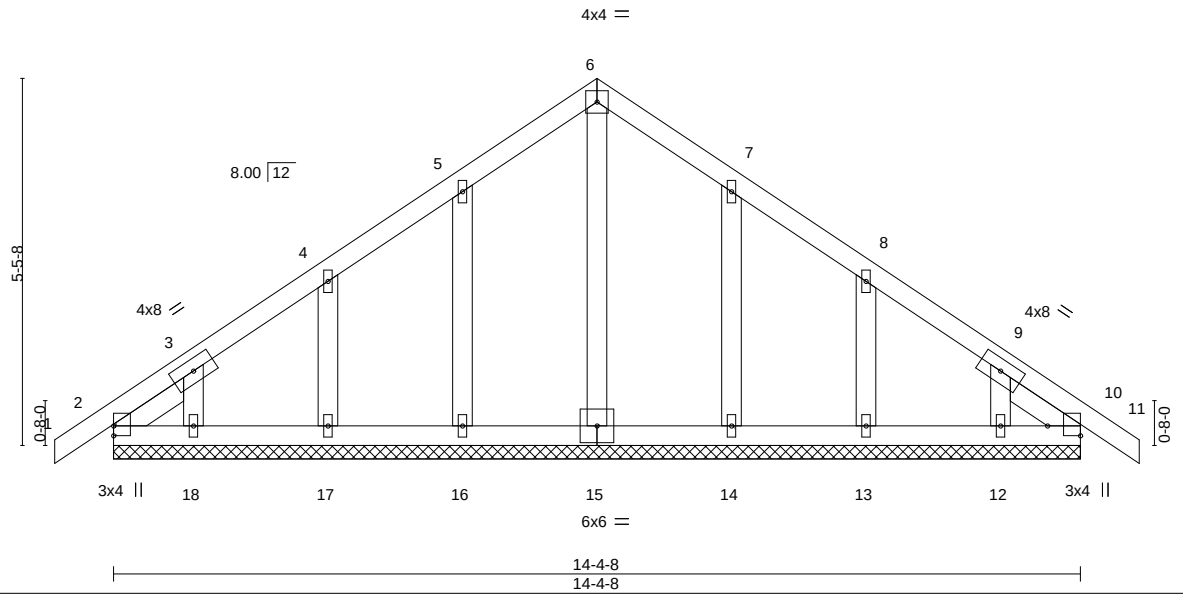

Plate Offsets (X,Y)-- [10:Edge,0-5-14]

LOADING (psf)		SPACING-	2-0-0	CSI.		DEFL.	in	(loc)	l/defl	L/d	PLATES	GRIP
TCLL (roof)	20.0	Plate Grip DOL	1.15	TC	0.05	Vert(LL)	-0.00	10	n/r	120	MT20	197/144
Snow (Pf/Pg)	11.6/15.0	Lumber DOL	1.15	BC	0.03	Vert(CT)	-0.00	11	n/r	120		
TCDL	10.0	Rep Stress Incr	YES	WB	0.05	Horz(CT)	0.00	10	n/a	n/a		
BCLL	0.0 *	Code IRC2015/TPI2014		Matrix-S							Weight: 82 lb	FT = 20%
BCDL	10.0											

LUMBER-

TOP CHORD	2x4 SP No.2 or 2x4 SPF No.2
BOT CHORD	2x4 SP No.2 or 2x4 SPF No.2
OTHERS	2x4 SP No.3
SLIDER	Left 2x4 SP No.3 -t 1-3-3, Right 2x4 SP No.3 -t 1-3-3

BRACING-

TOP CHORD	Structural wood sheathing directly applied or 6-0-0 oc purlins.
BOT CHORD	Rigid ceiling directly applied or 10-0-0 oc bracing.

REACTIONS. All bearings 14-4-8.
(lb) - Max Horz 2=-113(LC 12)
Max Uplift All uplift 100 lb or less at joint(s) 2, 16, 17, 18, 14, 13, 12, 10
Max Grav All reactions 250 lb or less at joint(s) 2, 15, 16, 17, 18, 14, 13, 12, 10

FORCES. (lb) - Max. Comp./Max. Ten. - All forces 250 (lb) or less except when shown.

NOTES-
1) Unbalanced roof live loads have been considered for this design.
2) Wind: ASCE 7-10; Vult=120mph Vasd=95mph; TCDL=6.0psf; BCDL=6.0psf; h=25ft; Cat. II; Exp B; Enclosed; MWFRS (envelope) gable end zone and C-C Corner(3) -0-10-8 to 2-1-8, Exterior(2) 2-1-8 to 7-2-4, Corner(3) 7-2-4 to 10-2-4, Exterior(2) 10-2-4 to 15-3-0 zone;C-C for members and forces & MWFRS for reactions shown; Lumber DOL=1.60 plate grip DOL=1.60
3) Truss designed for wind loads in the plane of the truss only. For studs exposed to wind (normal to the face), see Standard Industry Gable End Details as applicable, or consult qualified building designer as per ANSI/TPI 1.
4) TCLL: ASCE 7-10; Pr=20.0 psf (roof live load: Lumber DOL=1.15 Plate DOL=1.15); Pg=15.0 psf (ground snow); Pf=11.6 psf (flat roof snow: Lumber DOL=1.15 Plate DOL=1.15); Category II; Exp B; Partially Exp.; Ct=1.10
5) This truss has been designed for greater of min roof live load of 12.0 psf or 1.00 times flat roof load of 11.6 psf on overhangs non-concurrent with other live loads.
6) All plates are 1.5x4 MT20 unless otherwise indicated.
7) Gable requires continuous bottom chord bearing.
8) Gable studs spaced at 2-0-0 oc.
9) This truss has been designed for a 10.0 psf bottom chord live load nonconcurrent with any other live loads.
10) * This truss has been designed for a live load of 20.0psf on the bottom chord in all areas where a rectangle 3-6-0 tall by 2-0-0 wide will fit between the bottom chord and any other members.
11) One RT7A USP connectors recommended to connect truss to bearing walls due to UPLIFT at jt(s) 2, 16, 17, 18, 14, 13, 12, and 10. This connection is for uplift only and does not consider lateral forces.

February 22,2021

WARNING - Verify design parameters and READ NOTES ON THIS AND INCLUDED MITEK REFERENCE PAGE MII-7473 rev. 5/19/2020 BEFORE USE.
Design valid for use only with MiTek® connectors. This design is based only upon parameters shown, and is for an individual building component, not a truss system. Before use, the building designer must verify the applicability of design parameters and properly incorporate this design into the overall building design. Bracing indicated is to prevent buckling of individual truss web and/or chord members only. Additional temporary and permanent bracing is always required for stability and to prevent collapse with possible personal injury and property damage. For general guidance regarding the fabrication, storage, delivery, erection and bracing of trusses and truss systems, see **ANSI/TPI1 Quality Criteria, DSB-89 and BCSI Building Component Safety Information** available from Truss Plate Institute, 2670 Crain Highway, Suite 203 Waldorf, MD 20601

ENGINEERING BY TRENCO A MiTek Affiliate
818 Soundside Road
Edenton, NC 27932

Job	Truss	Truss Type	Qty	Ply	KB Home 150.1910 C2
150_1910_C2	AG	COMMON GIRDER	1	2	I44899786 Job Reference (optional)

84 Components (Dunn), Dunn, NC - 28334, 8.430 s Feb 12 2021 MiTek Industries, Inc. Mon Feb 22 09:03:50 2021 Page 1
ID:VMD62rz1yiHD_OqRtbnrlFztQ8K-5TrOOgDXeREfe1l6?Ls553XF16STf7Leelynihzidsd

Scale = 1:35.4

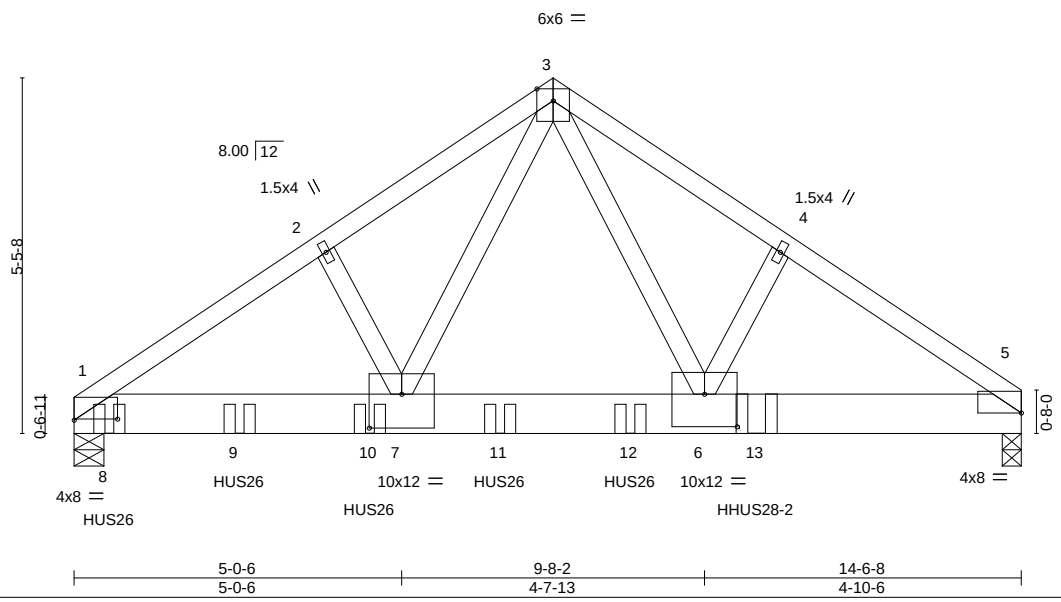

Plate Offsets (X,Y)-- [1:0-8-0,0-0-3], [6:0-6-0,0-6-0], [7:0-6-0,0-6-4]

LOADING (psf)		**SPACING-**	2-0-0	**CSI.**		**DEFL.**	in	(loc)	l/defl	L/d	**PLATES**	**GRIP**
TCLL (roof)	20.0	Plate Grip DOL	1.15	TC	0.49	Vert(LL)	-0.07	6-7	>999	240	MT20	197/144
Snow (Pf/Pg)	11.6/15.0	Lumber DOL	1.15	BC	0.47	Vert(CT)	-0.15	6-7	>999	180		
TCDL	10.0	Rep Stress Incr	NO	WB	0.96	Horz(CT)	0.02	5	n/a	n/a		
BCLL	0.0 *	Code IRC2015/TPI2014		Matrix-S							Weight: 188 lb	FT = 20%
BCDL	10.0											

LUMBER-
TOP CHORD 2x4 SP No.2 or 2x4 SPF No.2
BOT CHORD 2x8 SP DSS
WEBS 2x4 SP No.3

BRACING-
TOP CHORD Structural wood sheathing directly applied or 4-0-14 oc purlins.
BOT CHORD Rigid ceiling directly applied or 10-0-0 oc bracing.

REACTIONS. (size) 1=0-5-8, 5=(0-3-8 + TBE4 Simpson Strong-Tie) (req. 0-3-13)
Max Horz 1=-105(LC 29)
Max Uplift 1=-428(LC 10), 5=-660(LC 11)
Max Grav 1=7001(LC 2), 5=4836(LC 2)

FORCES. (lb) - Max. Comp./Max. Ten. - All forces 250 (lb) or less except when shown.
TOP CHORD 1-2=-7726/644, 2-3=-7572/683, 3-4=-7297/1001, 4-5=-7480/966
BOT CHORD 1-7=-540/6198, 6-7=-418/4304, 5-6=-734/5931
WEBS 3-6=-825/4121, 4-6=-186/389, 3-7=-197/4657, 2-7=-182/300

NOTES-
1) 2-ply truss to be connected together with 10d (0.131"x3") nails as follows:
Top chords connected as follows: 2x4 - 1 row at 0-9-0 oc.
Bottom chords connected as follows: 2x8 - 2 rows staggered at 0-3-0 oc.
Webs connected as follows: 2x4 - 1 row at 0-9-0 oc.
2) All loads are considered equally applied to all plies, except if noted as front (F) or back (B) face in the LOAD CASE(S) section. Ply to ply connections have been provided to distribute only loads noted as (F) or (B), unless otherwise indicated.
3) Unbalanced roof live loads have been considered for this design.
4) Wind: ASCE 7-10; Vult=120mph Vasd=95mph; TCDL=6.0psf; BCDL=6.0psf; h=25ft; Cat. II; Exp B; Enclosed; MWFRS (envelope) gable end zone; Lumber DOL=1.60 plate grip DOL=1.60
5) TCLL: ASCE 7-10; Pr=20.0 psf (roof live load: Lumber DOL=1.15 Plate DOL=1.15); Pg=15.0 psf (ground snow); Pf=11.6 psf (flat roof snow: Lumber DOL=1.15 Plate DOL=1.15); Category II; Exp B; Partially Exp.; Ct=1.10
6) This truss has been designed for a 10.0 psf bottom chord live load nonconcurrent with any other live loads.
7) * This truss has been designed for a live load of 20.0psf on the bottom chord in all areas where a rectangle 3-6-0 tall by 2-0-0 wide will fit between the bottom chord and any other members.
8) TBE4 Simpson Strong-Tie connectors recommended to connect truss to bearing walls due to UPLIFT at jt(s) 5. This connection is for uplift only and does not consider lateral forces.
9) One H2.5A Simpson Strong-Tie connectors recommended to connect truss to bearing walls due to UPLIFT at jt(s) 1. This connection is for uplift only and does not consider lateral forces.
10) Use Simpson Strong-Tie HUS26 (14-10d Girder, 4-10d Truss) or equivalent spaced at 6-0-0 oc max. starting at 0-6-8 from the left end to 8-6-8 to connect truss(es) to back face of bottom chord.
11) Use Simpson Strong-Tie HUS26 (14-10d Girder, 6-10d Truss, Single Ply Girder) or equivalent spaced at 2-0-0 oc max. starting at 2-6-8 from the left end to 4-6-8 to connect truss(es) to back face of bottom chord.
12) Use Simpson Strong-Tie HHUS28-2 (22-10d Girder, 4-10d Truss) or equivalent at 10-5-12 from the left end to connect truss(es) to back face of bottom chord.
13) Fill all nail holes where hanger is in contact with lumber.

Continued on page 2

February 22,2021

LOAD CASE(S) Standard

WARNING - Verify design parameters and READ NOTES ON THIS AND INCLUDED MITEK REFERENCE PAGE MII-7473 rev. 5/19/2020 BEFORE USE.
Design valid for use only with MiTek® connectors. This design is based only upon parameters shown, and is for an individual building component, not a truss system. Before use, the building designer must verify the applicability of design parameters and properly incorporate this design into the overall building design. Bracing indicated is to prevent buckling of individual truss web and/or chord members only. Additional temporary and permanent bracing is always required for stability and to prevent collapse with possible personal injury and property damage. For general guidance regarding the fabrication, storage, delivery, erection and bracing of trusses and truss systems, see **ANSI/TPI1 Quality Criteria, DSB-89 and BCSI Building Component Safety Information** available from Truss Plate Institute, 2670 Crain Highway, Suite 203 Waldorf, MD 20601

ENGINEERING BY TRENCO A MiTek Affiliate
818 Soundside Road
Edenton, NC 27932

LOAD CASE(S) Standard

1) Dead + Snow (balanced): Lumber Increase=1.15, Plate Increase=1.15
   Uniform Loads (plf)
   Vert: 1-3=-43, 3-5=-43, 1-5=-20
   Concentrated Loads (lb)
   Vert: 8=-1618(B) 9=-1544(B) 10=-1541(B) 11=-1608(B) 12=-1657(B) 13=-2171(B)

WARNING - Verify design parameters and READ NOTES ON THIS AND INCLUDED MITEK REFERENCE PAGE MII-7473 rev. 5/19/2020 BEFORE USE.
Design valid for use only with MiTek® connectors. This design is based only upon parameters shown, and is for an individual building component, not a truss system. Before use, the building designer must verify the applicability of design parameters and properly incorporate this design into the overall building design. Bracing indicated is to prevent buckling of individual truss web and/or chord members only. Additional temporary and permanent bracing is always required for stability and to prevent collapse with possible personal injury and property damage. For general guidance regarding the fabrication, storage, delivery, erection and bracing of trusses and truss systems, see **ANSI/TPI1 Quality Criteria, DSB-89 and BCSI Building Component Safety Information** available from Truss Plate Institute, 2670 Crain Highway, Suite 203 Waldorf, MD 20601

ENGINEERING BY TRENCO A MiTek Affiliate
818 Soundside Road
Edenton, NC 27932

Job	Truss	Truss Type	Qty	Ply	KB Home 150.1910 C2
150_1910_C2	B1	Common	2	1	I44899787 Job Reference (optional)

84 Components (Dunn), Dunn, NC - 28334, 8.430 s Feb 12 2021 MiTek Industries, Inc. Mon Feb 22 09:03:51 2021 Page 1
ID:VMD62rz1yiHD_OqRtbnrlFztQ8K-agPmb0EAPlMVGBJIZ2OKdG3M4WrWOhnntyiKE7zidsc

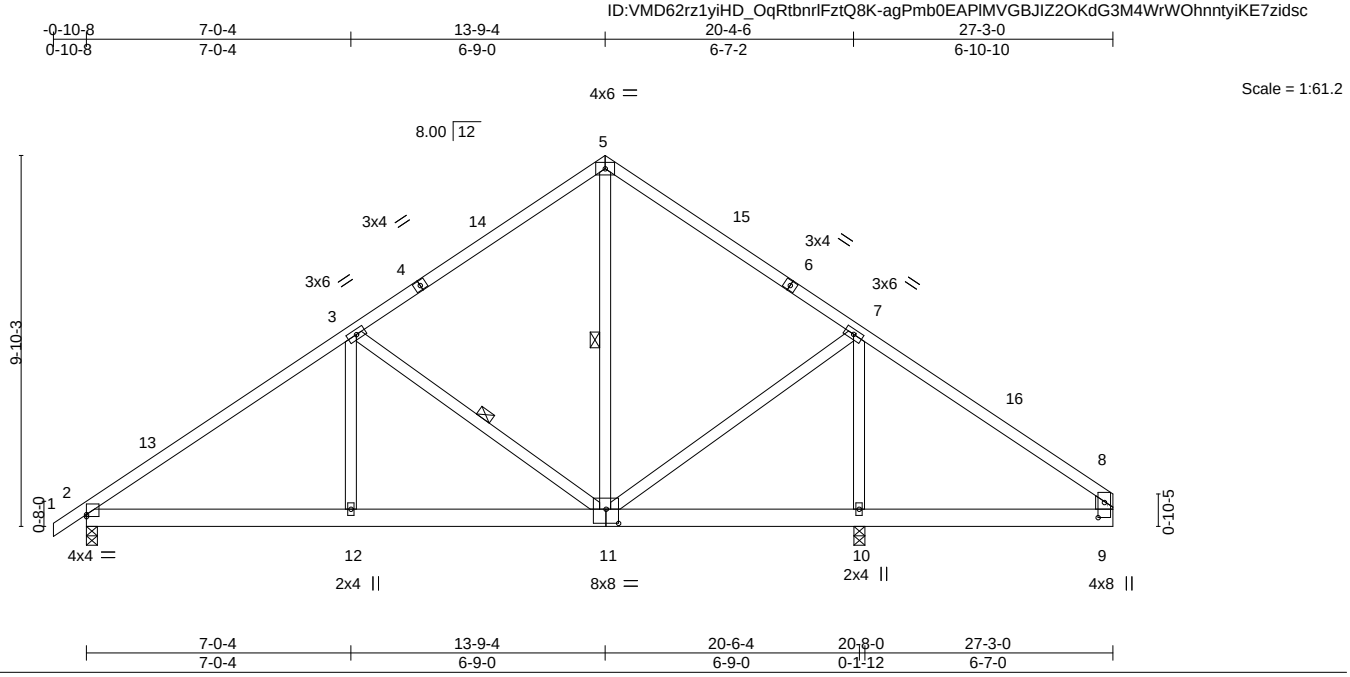

Plate Offsets (X,Y)-- [2:0-0-0,0-0-10], [9:0-4-13,0-2-0], [11:0-4-0,0-4-8]

LOADING (psf)		**SPACING-**	2-0-0	**CSI.**		**DEFL.**	in	(loc)	l/defl	L/d	**PLATES**	**GRIP**
TCLL (roof)	20.0	Plate Grip DOL	1.15	TC	0.73	Vert(LL)	0.03	2-12	>999	240	MT20	197/144
Snow (Pf/Pg)	11.6/15.0	Lumber DOL	1.15	BC	0.29	Vert(CT)	-0.06	2-12	>999	180		
TCDL	10.0	Rep Stress Incr	YES	WB	0.57	Horz(CT)	0.01	10	n/a	n/a		
BCLL	0.0 *	Code IRC2015/TPI2014		Matrix-S							Weight: 166 lb	FT = 20%
BCDL	10.0											

LUMBER-
TOP CHORD 2x4 SP No.2 or 2x4 SPF No.2
BOT CHORD 2x6 SP No.2
WEBS 2x4 SP No.3 *Except*
8-9: 2x6 SP No.2

BRACING-
TOP CHORD Structural wood sheathing directly applied or 5-6-2 oc purlins, except end verticals.
BOT CHORD Rigid ceiling directly applied or 6-0-0 oc bracing.
WEBS 1 Row at midpt 3-11, 5-11

REACTIONS. (size) 2=0-3-8, 10=0-3-8
Max Horz 2=202(LC 11)
Max Uplift 2=-66(LC 14), 10=-63(LC 15)
Max Grav 2=794(LC 2), 10=1417(LC 2)

FORCES. (lb) - Max. Comp./Max. Ten. - All forces 250 (lb) or less except when shown.
TOP CHORD 2-3=-984/83, 3-5=-464/126, 5-7=-466/139, 7-8=-32/420
BOT CHORD 2-12=-116/778, 11-12=-116/778, 10-11=-251/71, 9-10=-251/71
WEBS 3-12=0/315, 3-11=-557/178, 7-11=0/650, 7-10=-1197/133

NOTES-
1) Unbalanced roof live loads have been considered for this design.
2) Wind: ASCE 7-10; Vult=120mph Vasd=95mph; TCDL=6.0psf; BCDL=6.0psf; h=25ft; Cat. II; Exp B; Enclosed; MWFRS (envelope) gable end zone and C-C Exterior(2) -0-10-8 to 2-1-8, Interior(1) 2-1-8 to 13-9-4, Exterior(2) 13-9-4 to 16-9-4, Interior(1) 16-9-4 to 27-0-4 zone;C-C for members and forces & MWFRS for reactions shown; Lumber DOL=1.60 plate grip DOL=1.60
3) TCLL: ASCE 7-10; Pr=20.0 psf (roof live load: Lumber DOL=1.15 Plate DOL=1.15); Pg=15.0 psf (ground snow); Pf=11.6 psf (flat roof snow: Lumber DOL=1.15 Plate DOL=1.15); Category II; Exp B; Partially Exp.; Ct=1.10
4) This truss has been designed for greater of min roof live load of 12.0 psf or 1.00 times flat roof load of 11.6 psf on overhangs non-concurrent with other live loads.
5) This truss has been designed for a 10.0 psf bottom chord live load nonconcurrent with any other live loads.
6) * This truss has been designed for a live load of 20.0psf on the bottom chord in all areas where a rectangle 3-6-0 tall by 2-0-0 wide will fit between the bottom chord and any other members.
7) One RT7A USP connectors recommended to connect truss to bearing walls due to UPLIFT at jt(s) 2 and 10. This connection is for uplift only and does not consider lateral forces.

February 22,2021

WARNING - Verify design parameters and READ NOTES ON THIS AND INCLUDED MITEK REFERENCE PAGE MII-7473 rev. 5/19/2020 BEFORE USE.
Design valid for use only with MiTek® connectors. This design is based only upon parameters shown, and is for an individual building component, not a truss system. Before use, the building designer must verify the applicability of design parameters and properly incorporate this design into the overall building design. Bracing indicated is to prevent buckling of individual truss web and/or chord members only. Additional temporary and permanent bracing is always required for stability and to prevent collapse with possible personal injury and property damage. For general guidance regarding the fabrication, storage, delivery, erection and bracing of trusses and truss systems, see **ANSI/TPI1 Quality Criteria, DSB-89 and BCSI Building Component Safety Information** available from Truss Plate Institute, 2670 Crain Highway, Suite 203 Waldorf, MD 20601

ENGINEERING BY TRENCO A MiTek Affiliate
818 Soundside Road
Edenton, NC 27932

Job	Truss	Truss Type	Qty	Ply	KB Home 150.1910 C2
150_1910_C2	B2	Common	3	1	I44899788 Job Reference (optional)

84 Components (Dunn), Dunn, NC - 28334, 8.430 s Feb 12 2021 MiTek Industries, Inc. Mon Feb 22 09:03:52 2021 Page 1
ID:VMD62rz1yiHD_OqRtbnrlFztQ8K-2sz9pMFoA3UMuLuU7mvZAUcX?w8o7Dlx6cRumZzidsb

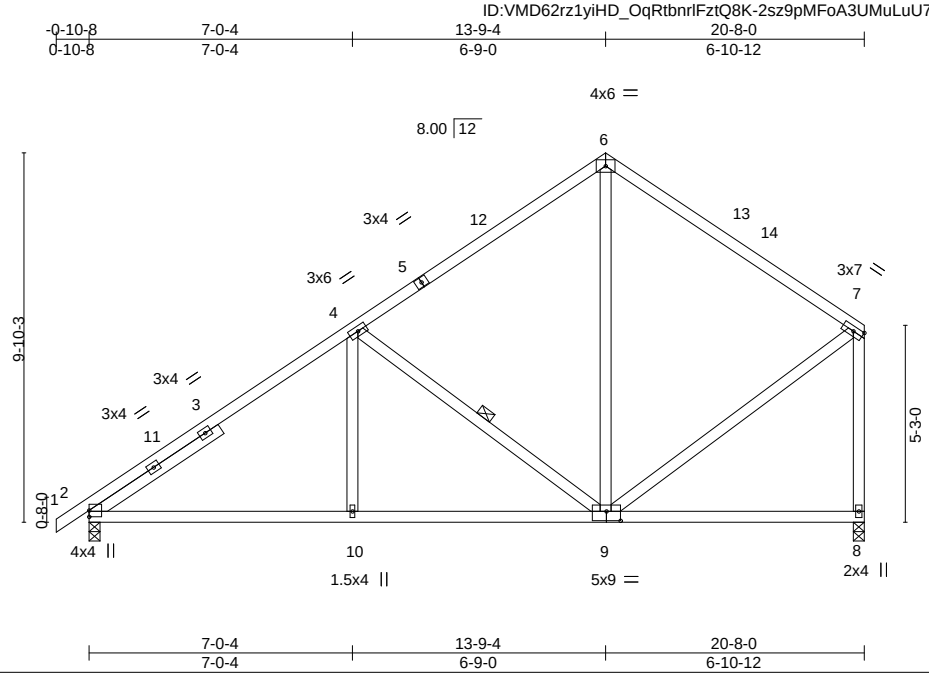

Plate Offsets (X,Y)-- [9:0-4-8,0-3-0]

LOADING (psf)		SPACING-	2-0-0	CSI.		DEFL.	in	(loc)	l/defl	L/d	PLATES	GRIP
TCLL (roof)	20.0	Plate Grip DOL	1.15	TC	0.72	Vert(LL)	-0.06	2-10	>999	240	MT20	197/144
Snow (Pf/Pg)	11.6/15.0	Lumber DOL	1.15	BC	0.48	Vert(CT)	-0.13	2-10	>999	180		
TCDL	10.0	Rep Stress Incr	YES	WB	0.20	Horz(CT)	0.02	8	n/a	n/a		
BCLL	0.0 *	Code IRC2015/TPI2014		Matrix-S							Weight: 128 lb	FT = 20%
BCDL	10.0											

LUMBER-
TOP CHORD 2x4 SP No.2 or 2x4 SPF No.2
BOT CHORD 2x4 SP No.2 or 2x4 SPF No.2
WEBS 2x4 SP No.3
SLIDER Left 2x4 SP No.3 -t 4-1-12

BRACING-
TOP CHORD Structural wood sheathing directly applied or 4-8-2 oc purlins, except end verticals.
BOT CHORD Rigid ceiling directly applied or 10-0-0 oc bracing.
WEBS 1 Row at midpt 4-9

REACTIONS. (size) 2=0-3-8, 8=0-3-8
Max Horz 2=236(LC 14)
Max Uplift 2=-47(LC 14), 8=-54(LC 14)
Max Grav 2=874(LC 2), 8=820(LC 2)

FORCES. (lb) - Max. Comp./Max. Ten. - All forces 250 (lb) or less except when shown.
TOP CHORD 2-4=-1087/52, 4-6=-616/104, 6-7=-604/107, 7-8=-759/93
BOT CHORD 2-10=-174/838, 9-10=-174/838
WEBS 4-10=0/289, 4-9=-536/178, 6-9=0/286, 7-9=-36/487

NOTES-
1) Unbalanced roof live loads have been considered for this design.
2) Wind: ASCE 7-10; Vult=120mph Vasd=95mph; TCDL=6.0psf; BCDL=6.0psf; h=25ft; Cat. II; Exp B; Enclosed; MWFRS (envelope) gable end zone and C-C Exterior(2) -0-10-8 to 2-1-8, Interior(1) 2-1-8 to 13-9-4, Exterior(2) 13-9-4 to 16-9-4, Interior(1) 16-9-4 to 20-6-4 zone;C-C for members and forces & MWFRS for reactions shown; Lumber DOL=1.60 plate grip DOL=1.60
3) TCLL: ASCE 7-10; Pr=20.0 psf (roof live load: Lumber DOL=1.15 Plate DOL=1.15); Pg=15.0 psf (ground snow); Pf=11.6 psf (flat roof snow: Lumber DOL=1.15 Plate DOL=1.15); Category II; Exp B; Partially Exp.; Ct=1.10
4) This truss has been designed for greater of min roof live load of 12.0 psf or 1.00 times flat roof load of 11.6 psf on overhangs non-concurrent with other live loads.
5) This truss has been designed for a 10.0 psf bottom chord live load nonconcurrent with any other live loads.
6) * This truss has been designed for a live load of 20.0psf on the bottom chord in all areas where a rectangle 3-6-0 tall by 2-0-0 wide will fit between the bottom chord and any other members.
7) One RT7A USP connectors recommended to connect truss to bearing walls due to UPLIFT at jt(s) 2 and 8. This connection is for uplift only and does not consider lateral forces.

February 22,2021

WARNING - Verify design parameters and READ NOTES ON THIS AND INCLUDED MITEK REFERENCE PAGE MII-7473 rev. 5/19/2020 BEFORE USE.
Design valid for use only with MiTek® connectors. This design is based only upon parameters shown, and is for an individual building component, not a truss system. Before use, the building designer must verify the applicability of design parameters and properly incorporate this design into the overall building design. Bracing indicated is to prevent buckling of individual truss web and/or chord members only. Additional temporary and permanent bracing is always required for stability and to prevent collapse with possible personal injury and property damage. For general guidance regarding the fabrication, storage, delivery, erection and bracing of trusses and truss systems, see **ANSI/TPI1 Quality Criteria, DSB-89 and BCSI Building Component Safety Information** available from Truss Plate Institute, 2670 Crain Highway, Suite 203 Waldorf, MD 20601

ENGINEERING BY TRENCO A MiTek Affiliate
818 Soundside Road
Edenton, NC 27932

Job	Truss	Truss Type	Qty	Ply	KB Home 150.1910 C2
150_1910_C2	BE	Common Supported Gable	1	1	I44899789 Job Reference (optional)

84 Components (Dunn), Dunn, NC - 28334, 8.430 s Feb 12 2021 MiTek Industries, Inc. Mon Feb 22 09:03:53 2021 Page 1
ID:VMD62rz1yiHD_OqRtbnrlFztQ8K-W2XX0iGQxMcDVVTghTQoih9hqKQwsgK4KGBRJ0zidsa

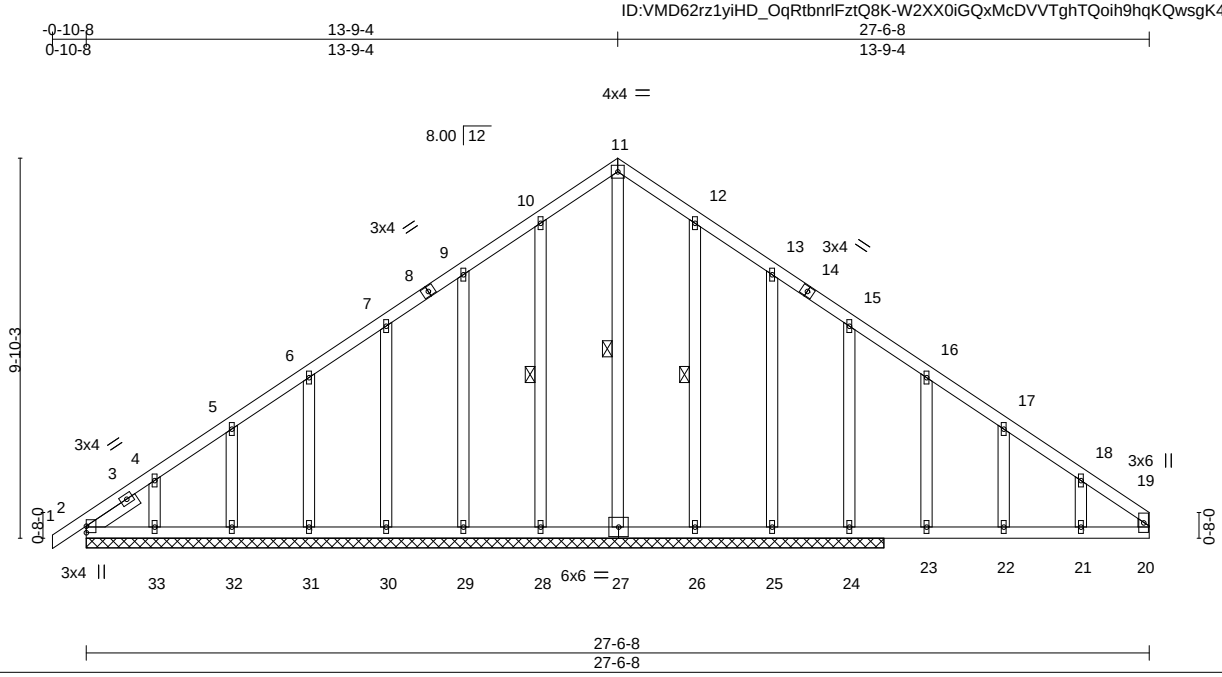

LOADING (psf)		SPACING-	2-0-0	CSI.		DEFL.	in	(loc)	l/defl	L/d	PLATES	GRIP
TCLL (roof)	20.0	Plate Grip DOL	1.15	TC	0.71	Vert(LL)	0.00	1	n/r	120	MT20	197/144
Snow (Pf/Pg)	11.6/15.0	Lumber DOL	1.15	BC	0.75	Vert(CT)	0.00	1	n/r	120		
TCDL	10.0	Rep Stress Incr	YES	WB	0.25	Horz(CT)	-0.01	24	n/a	n/a		
BCLL	0.0 *	Code IRC2015/TPI2014		Matrix-S							Weight: 191 lb	FT = 20%
BCDL	10.0											

LUMBER-

TOP CHORD	2x4 SP No.2 or 2x4 SPF No.2
BOT CHORD	2x4 SP No.2 or 2x4 SPF No.2
WEBS	2x4 SP No.3
OTHERS	2x4 SP No.3
SLIDER	Left 2x4 SP No.3 -t 1-6-5

BRACING-

TOP CHORD	Structural wood sheathing directly applied or 10-0-0 oc purlins, except end verticals.
BOT CHORD	Rigid ceiling directly applied or 6-0-0 oc bracing.
WEBS	1 Row at midpt 11-27, 10-28, 12-26

REACTIONS. All bearings 20-8-0.
(lb) - Max Horz 2=203(LC 11)
Max Uplift All uplift 100 lb or less at joint(s) 28, 29, 30, 31, 32, 33, 26 except 2=-226(LC 31), 25=-286(LC 27), 24=-236(LC 15)
Max Grav All reactions 250 lb or less at joint(s) 2, 28, 29, 30, 31, 32, 33, 25 except 27=519(LC 2), 26=295(LC 27), 24=855(LC 27)

FORCES. (lb) - Max. Comp./Max. Ten. - All forces 250 (lb) or less except when shown.

TOP CHORD	2-4=-179/516, 4-5=-107/461, 5-6=-56/450, 6-7=-7/435, 7-9=0/420, 9-10=0/416, 10-11=0/407, 11-12=0/400, 12-13=0/434, 13-15=0/329, 15-16=0/489, 16-17=-9/447, 17-18=-49/405, 18-19=-88/374
BOT CHORD	2-33=-326/95, 32-33=-326/95, 31-32=-326/95, 30-31=-326/95, 29-30=-326/95, 28-29=-326/95, 27-28=-326/95, 26-27=-327/95, 25-26=-327/95, 24-25=-327/95, 23-24=-327/95, 22-23=-327/95, 21-22=-327/95, 20-21=-327/95
WEBS	11-27=-497/0, 15-24=-421/151

NOTES-

1) Unbalanced roof live loads have been considered for this design.
2) Wind: ASCE 7-10; Vult=120mph Vasd=95mph; TCDL=6.0psf; BCDL=6.0psf; h=25ft; Cat. II; Exp B; Enclosed; MWFRS (envelope) gable end zone and C-C Corner(3) -0-10-8 to 2-1-8, Exterior(2) 2-1-8 to 13-9-4, Corner(3) 13-9-4 to 16-9-4, Exterior(2) 16-9-4 to 27-4-12 zone;C-C for members and forces & MWFRS for reactions shown; Lumber DOL=1.60 plate grip DOL=1.60
3) Truss designed for wind loads in the plane of the truss only. For studs exposed to wind (normal to the face), see Standard Industry Gable End Details as applicable, or consult qualified building designer as per ANSI/TPI 1.
4) TCLL: ASCE 7-10; Pr=20.0 psf (roof live load: Lumber DOL=1.15 Plate DOL=1.15); Pg=15.0 psf (ground snow); Pf=11.6 psf (flat roof snow: Lumber DOL=1.15 Plate DOL=1.15); Category II; Exp B; Partially Exp.; Ct=1.10
5) This truss has been designed for greater of min roof live load of 12.0 psf or 1.00 times flat roof load of 11.6 psf on overhangs non-concurrent with other live loads.
6) All plates are 1.5x4 MT20 unless otherwise indicated.
7) Gable studs spaced at 2-0-0 oc.
8) This truss has been designed for a 10.0 psf bottom chord live load nonconcurrent with any other live loads.
9) * This truss has been designed for a live load of 20.0psf on the bottom chord in all areas where a rectangle 3-6-0 tall by 2-0-0 wide will fit between the bottom chord and any other members.
10) One RT7A USP connectors recommended to connect truss to bearing walls due to UPLIFT at jt(s) 2, 28, 29, 30, 31, 32, 33, 26, 25, and 24. This connection is for uplift only and does not consider lateral forces.

February 22,2021

WARNING - Verify design parameters and READ NOTES ON THIS AND INCLUDED MITEK REFERENCE PAGE MII-7473 rev. 5/19/2020 BEFORE USE.
Design valid for use only with MiTek® connectors. This design is based only upon parameters shown, and is for an individual building component, not a truss system. Before use, the building designer must verify the applicability of design parameters and properly incorporate this design into the overall building design. Bracing indicated is to prevent buckling of individual truss web and/or chord members only. Additional temporary and permanent bracing is always required for stability and to prevent collapse with possible personal injury and property damage. For general guidance regarding the fabrication, storage, delivery, erection and bracing of trusses and truss systems, see **ANSI/TPI1 Quality Criteria, DSB-89 and BCSI Building Component Safety Information** available from Truss Plate Institute, 2670 Crain Highway, Suite 203 Waldorf, MD 20601

ENGINEERING BY TRENCO A MiTek Affiliate
818 Soundside Road
Edenton, NC 27932

Job	Truss	Truss Type	Qty	Ply	KB Home 150.1910 C2
150_1910_C2	BG	Common Girder	1	3	I44899790 Job Reference (optional)

84 Components (Dunn), Dunn, NC - 28334, 8.430 s Feb 12 2021 MiTek Industries, Inc. Mon Feb 22 09:03:55 2021 Page 1
ID:VMD62rz1yiHD_OqRtbnrlFztQ8K-SRfHRNHgT_sxlod3ouSGo6E8_7FJKcMNoagYNuzidsY

Scale: 3/16"=1'

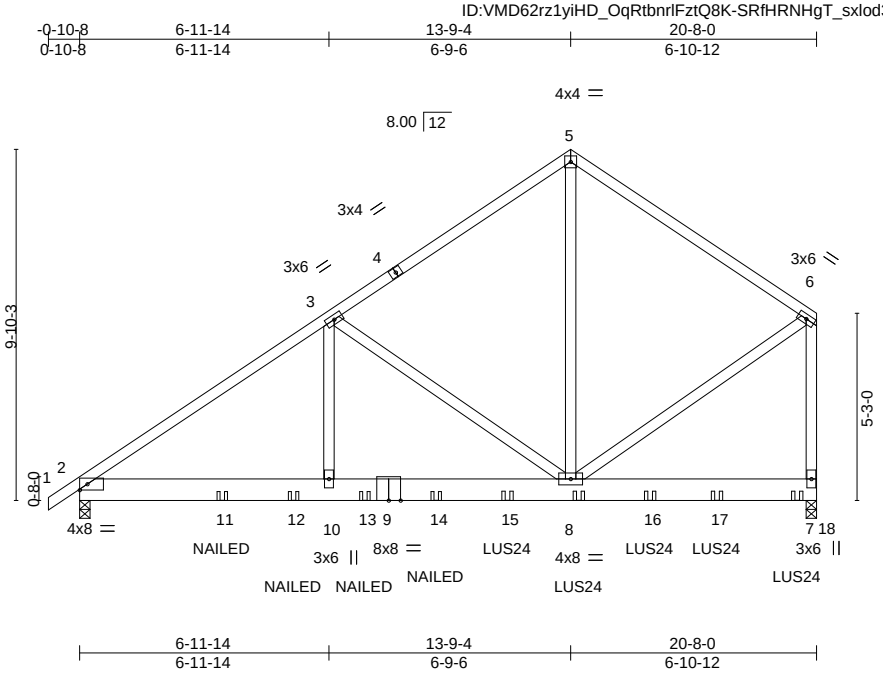

LOADING (psf)		SPACING-	2-0-0	CSI.		DEFL.	in	(loc)	l/defl	L/d	PLATES	GRIP
TCLL (roof)	20.0	Plate Grip DOL	1.15	TC	0.29	Vert(LL)	0.02	7-8	>999	240	MT20	197/144
Snow (Pf/Pg)	11.6/15.0	Lumber DOL	1.15	BC	0.11	Vert(CT)	0.02	7-8	>999	180		
TCDL	10.0	Rep Stress Incr	NO	WB	0.08	Horz(CT)	0.00	7	n/a	n/a		
BCLL	0.0 *	Code	IRC2015/TPI2014	Matrix-S							Weight: 458 lb	FT = 20%
BCDL	10.0											

LUMBER-
TOP CHORD 2x4 SP No.2 or 2x4 SPF No.2
BOT CHORD 2x8 SP No.2
WEBS 2x4 SP No.3 *Except*
6-7: 2x4 SP No.2 or 2x4 SPF No.2

BRACING-
TOP CHORD Structural wood sheathing directly applied or 6-0-0 oc purlins, except end verticals.
BOT CHORD Rigid ceiling directly applied or 6-0-0 oc bracing.

REACTIONS. (size) 2=0-3-8, 7=0-3-8
Max Horz 2=235(LC 43)
Max Uplift 2=-384(LC 10), 7=-643(LC 35)
Max Grav 2=826(LC 53), 7=1149(LC 2)

FORCES. (lb) - Max. Comp./Max. Ten. - All forces 250 (lb) or less except when shown.
TOP CHORD 2-3=-1038/595, 3-5=-736/414, 5-6=-723/486, 6-7=-882/384
BOT CHORD 2-10=-588/865, 8-10=-588/865
WEBS 3-10=-369/181, 3-8=-496/419, 5-8=-690/337, 6-8=-408/590

NOTES-
1) 3-ply truss to be connected together with 10d (0.131"x3") nails as follows:
Top chords connected as follows: 2x4 - 1 row at 0-9-0 oc.
Bottom chords connected as follows: 2x8 - 2 rows staggered at 0-9-0 oc.
Webs connected as follows: 2x4 - 1 row at 0-9-0 oc.
2) All loads are considered equally applied to all plies, except if noted as front (F) or back (B) face in the LOAD CASE(S) section. Ply to ply connections have been provided to distribute only loads noted as (F) or (B), unless otherwise indicated.
3) Unbalanced roof live loads have been considered for this design.
4) Wind: ASCE 7-10; Vult=120mph Vasd=95mph; TCDL=6.0psf; BCDL=6.0psf; h=25ft; Cat. II; Exp B; Enclosed; MWFRS (envelope) gable end zone; Lumber DOL=1.60 plate grip DOL=1.60
5) TCLL: ASCE 7-10; Pr=20.0 psf (roof live load: Lumber DOL=1.15 Plate DOL=1.15); Pg=15.0 psf (ground snow); Pf=11.6 psf (flat roof snow: Lumber DOL=1.15 Plate DOL=1.15); Category II; Exp B; Partially Exp.; Ct=1.10
6) This truss has been designed for greater of min roof live load of 12.0 psf or 1.00 times flat roof load of 11.6 psf on overhangs non-concurrent with other live loads.
7) This truss has been designed for a 10.0 psf bottom chord live load nonconcurrent with any other live loads.
8) * This truss has been designed for a live load of 20.0psf on the bottom chord in all areas where a rectangle 3-6-0 tall by 2-0-0 wide will fit between the bottom chord and any other members.
9) One H2.5A Simpson Strong-Tie connectors recommended to connect truss to bearing walls due to UPLIFT at jt(s) 2. This connection is for uplift only and does not consider lateral forces.
10) Two H2.5A Simpson Strong-Tie connectors recommended to connect truss to bearing walls due to UPLIFT at jt(s) 7. This connection is for uplift only and does not consider lateral forces.

Continued on page 2

February 22,2021

WARNING - Verify design parameters and READ NOTES ON THIS AND INCLUDED MITEK REFERENCE PAGE MII-7473 rev. 5/19/2020 BEFORE USE.
Design valid for use only with MiTek® connectors. This design is based only upon parameters shown, and is for an individual building component, not a truss system. Before use, the building designer must verify the applicability of design parameters and properly incorporate this design into the overall building design. Bracing indicated is to prevent buckling of individual truss web and/or chord members only. Additional temporary and permanent bracing is always required for stability and to prevent collapse with possible personal injury and property damage. For general guidance regarding the fabrication, storage, delivery, erection and bracing of trusses and truss systems, see **ANSI/TPI1 Quality Criteria, DSB-89 and BCSI Building Component Safety Information** available from Truss Plate Institute, 2670 Crain Highway, Suite 203 Waldorf, MD 20601

ENGINEERING BY TRENCO A MiTek Affiliate
818 Soundside Road
Edenton, NC 27932

NOTES-

11) Use Simpson Strong-Tie LUS24 (4-10d Girder, 2-10d Truss, Single Ply Girder) or equivalent spaced at 2-3-0 oc max. starting at 12-0-0 from the left end to 20-1-8 to connect truss(es) to back face of bottom chord.
12) Fill all nail holes where hanger is in contact with lumber.
13) "NAILED" indicates 3-10d (0.148"x3") or 3-12d (0.148"x3.25") toe-nails per NDS guidlines.

LOAD CASE(S) Standard

1) Dead + Snow (balanced): Lumber Increase=1.15, Plate Increase=1.15
   Uniform Loads (plf)
   Vert: 1-5=-43, 5-6=-43, 2-7=-20
   Concentrated Loads (lb)
   Vert: 8=-112(B) 11=111(B) 12=84(B) 13=85(B) 14=-19(B) 15=-34(B) 16=-123(B) 17=-123(B) 18=-129(B)

WARNING - Verify design parameters and READ NOTES ON THIS AND INCLUDED MITEK REFERENCE PAGE MII-7473 rev. 5/19/2020 BEFORE USE.
Design valid for use only with MiTek® connectors. This design is based only upon parameters shown, and is for an individual building component, not a truss system. Before use, the building designer must verify the applicability of design parameters and properly incorporate this design into the overall building design. Bracing indicated is to prevent buckling of individual truss web and/or chord members only. Additional temporary and permanent bracing is always required for stability and to prevent collapse with possible personal injury and property damage. For general guidance regarding the fabrication, storage, delivery, erection and bracing of trusses and truss systems, see **ANSI/TPI1 Quality Criteria, DSB-89 and BCSI Building Component Safety Information** available from Truss Plate Institute, 2670 Crain Highway, Suite 203 Waldorf, MD 20601

ENGINEERING BY TRENCO A MiTek Affiliate
818 Soundside Road
Edenton, NC 27932

Job	Truss	Truss Type	Qty	Ply	KB Home 150.1910 C2
150_1910_C2	CE	COMMON SUPPORTED GAB	1	1	I44899791 Job Reference (optional)

84 Components (Dunn), Dunn, NC - 28334, 8.430 s Feb 12 2021 MiTek Industries, Inc. Mon Feb 22 09:03:56 2021 Page 1
ID:VMD62rz1yiHD_OqRtbnrlFztQ8K-wdDffjIIEH_oMyCFMbzVKKnNPXc134TW0EP5vLzidsX

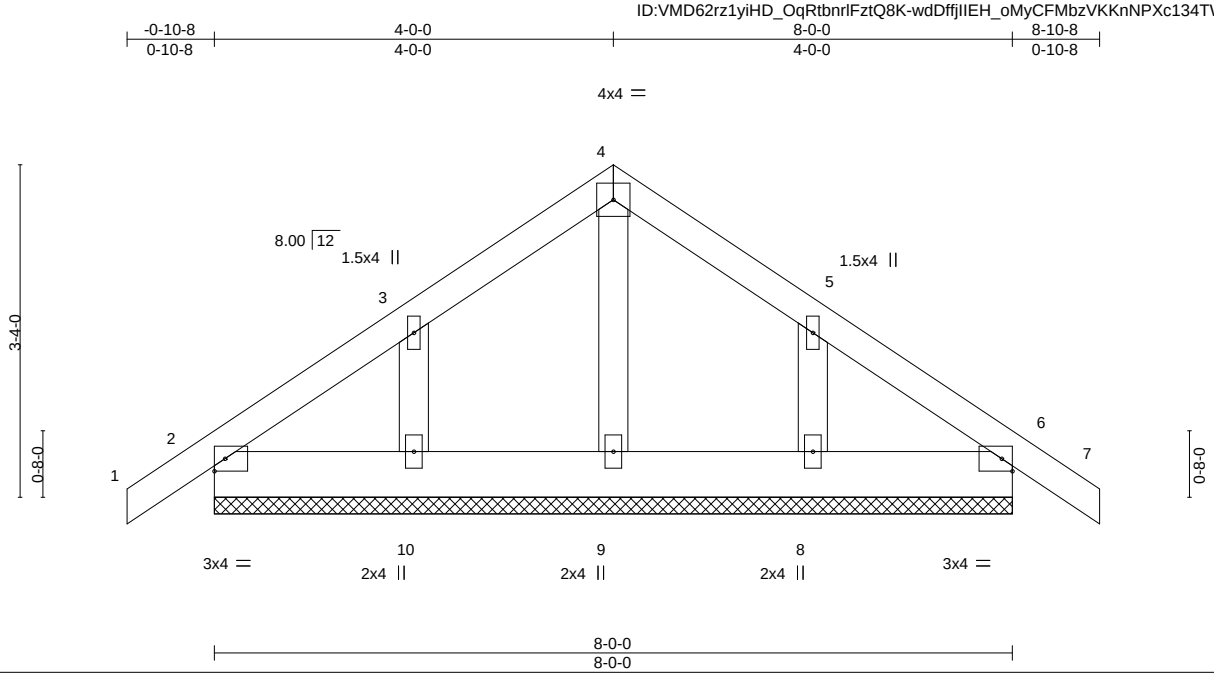

LOADING (psf)		SPACING-	2-0-0	CSI.		DEFL.	in	(loc)	l/defl	L/d	PLATES	GRIP
TCLL (roof)	20.0	Plate Grip DOL	1.15	TC	0.05	Vert(LL)	-0.00	6	n/r	120	MT20	197/144
Snow (Pf/Pg)	11.6/15.0	Lumber DOL	1.15	BC	0.02	Vert(CT)	-0.00	7	n/r	120		
TCDL	10.0	Rep Stress Incr	YES	WB	0.03	Horz(CT)	0.00	6	n/a	n/a		
BCLL	0.0 *	Code IRC2015/TPI2014		Matrix-P							Weight: 44 lb	FT = 20%
BCDL	10.0											

LUMBER-
TOP CHORD 2x4 SP No.2 or 2x4 SPF No.2
BOT CHORD 2x6 SP No.2
OTHERS 2x4 SP No.3

BRACING-
TOP CHORD Structural wood sheathing directly applied or 6-0-0 oc purlins.
BOT CHORD Rigid ceiling directly applied or 10-0-0 oc bracing.

REACTIONS. All bearings 8-0-0.
(lb) - Max Horz 2=68(LC 13)
Max Uplift All uplift 100 lb or less at joint(s) 2, 6, 10, 8
Max Grav All reactions 250 lb or less at joint(s) 2, 6, 9, 10, 8

FORCES. (lb) - Max. Comp./Max. Ten. - All forces 250 (lb) or less except when shown.

NOTES-
1) Unbalanced roof live loads have been considered for this design.
2) Wind: ASCE 7-10; Vult=120mph Vasd=95mph; TCDL=6.0psf; BCDL=6.0psf; h=25ft; Cat. II; Exp B; Enclosed; MWFRS (envelope) gable end zone and C-C Corner(3) -0-10-8 to 2-0-0, Exterior(2) 2-0-0 to 4-0-0, Corner(3) 4-0-0 to 7-0-0, Exterior(2) 7-0-0 to 8-10-8 zone; porch left and right exposed;C-C for members and forces & MWFRS for reactions shown; Lumber DOL=1.60 plate grip DOL=1.60
3) Truss designed for wind loads in the plane of the truss only. For studs exposed to wind (normal to the face), see Standard Industry Gable End Details as applicable, or consult qualified building designer as per ANSI/TPI 1.
4) TCLL: ASCE 7-10; Pr=20.0 psf (roof live load: Lumber DOL=1.15 Plate DOL=1.15); Pg=15.0 psf (ground snow); Pf=11.6 psf (flat roof snow: Lumber DOL=1.15 Plate DOL=1.15); Category II; Exp B; Partially Exp.; Ct=1.10
5) This truss has been designed for greater of min roof live load of 12.0 psf or 1.00 times flat roof load of 11.6 psf on overhangs non-concurrent with other live loads.
6) Gable requires continuous bottom chord bearing.
7) Gable studs spaced at 2-0-0 oc.
8) This truss has been designed for a 10.0 psf bottom chord live load nonconcurrent with any other live loads.
9) * This truss has been designed for a live load of 20.0psf on the bottom chord in all areas where a rectangle 3-6-0 tall by 2-0-0 wide will fit between the bottom chord and any other members.
10) One RT7A USP connectors recommended to connect truss to bearing walls due to UPLIFT at jt(s) 2, 6, 10, and 8. This connection is for uplift only and does not consider lateral forces.
11) Beveled plate or shim required to provide full bearing surface with truss chord at joint(s) 2.

February 22,2021

WARNING - Verify design parameters and READ NOTES ON THIS AND INCLUDED MITEK REFERENCE PAGE MII-7473 rev. 5/19/2020 BEFORE USE.
Design valid for use only with MiTek® connectors. This design is based only upon parameters shown, and is for an individual building component, not a truss system. Before use, the building designer must verify the applicability of design parameters and properly incorporate this design into the overall building design. Bracing indicated is to prevent buckling of individual truss web and/or chord members only. Additional temporary and permanent bracing is always required for stability and to prevent collapse with possible personal injury and property damage. For general guidance regarding the fabrication, storage, delivery, erection and bracing of trusses and truss systems, see **ANSI/TPI1 Quality Criteria, DSB-89 and BCSI Building Component Safety Information** available from Truss Plate Institute, 2670 Crain Highway, Suite 203 Waldorf, MD 20601

ENGINEERING BY TRENCO A MiTek Affiliate
818 Soundside Road
Edenton, NC 27932

Job	Truss	Truss Type	Qty	Ply	KB Home 150.1910 C2
150_1910_C2	H1	Hip	1	1	I44899792
					Job Reference (optional)

84 Components (Dunn), Dunn, NC - 28334, 8.430 s Feb 12 2021 MiTek Industries, Inc. Mon Feb 22 09:03:57 2021 Page 1
ID:VMD62rz1yiHD_OqRtbnrlFztQ8K-Opm2s3Jw?b6f_6nSwJUktXJQ9xmroJigFu9fSnzidsW

-0-10-8	4-2-15	8-3-0	16-0-10	24-0-0	31-11-6	39-9-0	42-2-8
0-10-8	4-2-15	4-0-1	7-9-10	7-11-6	7-11-6	7-9-10	2-5-8

Scale = 1:75.1

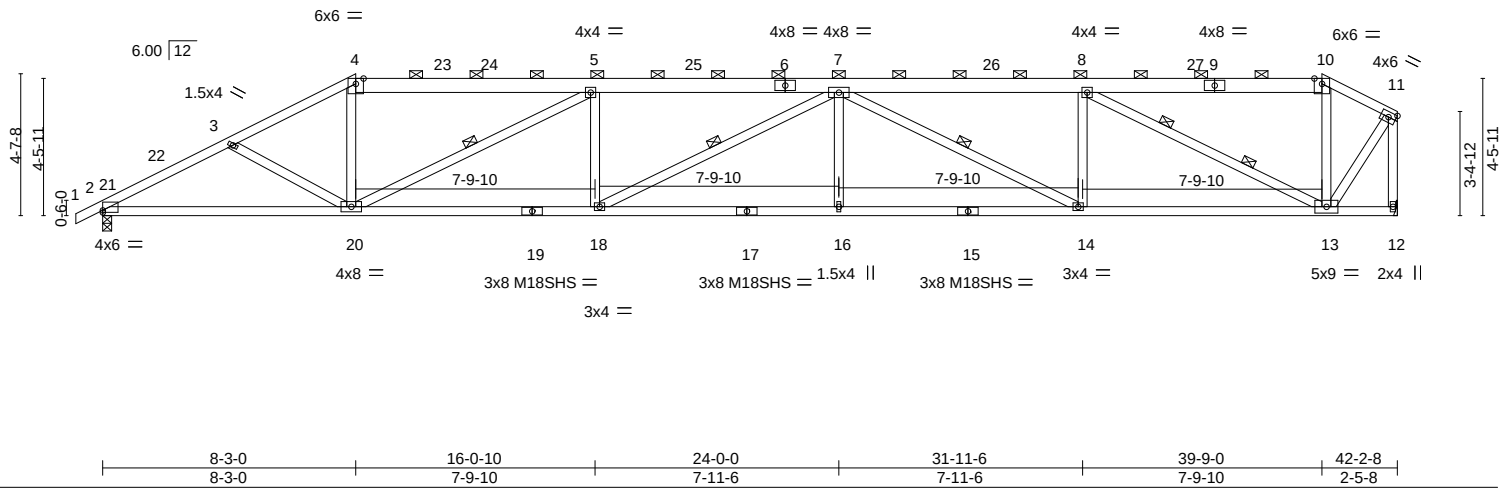

8-3-0	16-0-10	24-0-0	31-11-6	39-9-0	42-2-8
8-3-0	7-9-10	7-11-6	7-11-6	7-9-10	2-5-8

Plate Offsets (X,Y)-- [2:0-0-0,0-0-13]

LOADING (psf)		**SPACING-** 2-0-0	**CSI.**	**DEFL.** in (loc) l/defl L/d	**PLATES**	**GRIP**
TCLL (roof)	20.0	Plate Grip DOL 1.15	TC 0.56	Vert(LL) -0.34 16-18 >999 240	MT20	197/144
Snow (Pf/Pg)	16.5/15.0	Lumber DOL 1.15	BC 0.81	Vert(CT) -0.73 16-18 >689 180	M18SHS	244/190
TCDL	10.0	Rep Stress Incr YES	WB 0.92	Horz(CT) 0.21 12 n/a n/a		
BCLL	0.0 *	Code IRC2015/TPI2014	Matrix-S		Weight: 251 lb	FT = 20%
BCDL	10.0					

LUMBER-
TOP CHORD 2x6 SP No.2 *Except*
1-4,10-11: 2x4 SP No.2 or 2x4 SPF No.2
BOT CHORD 2x4 SP No.1
WEBS 2x4 SP No.3

BRACING-
TOP CHORD Structural wood sheathing directly applied or 3-0-0 oc purlins, except end verticals, and 2-0-0 oc purlins (3-3-14 max.): 4-10.
BOT CHORD Rigid ceiling directly applied or 6-0-0 oc bracing.
WEBS 1 Row at midpt 5-20, 7-18, 7-14
2 Rows at 1/3 pts 8-13

REACTIONS. (size) 2=0-3-8, 12=Mechanical
Max Horz 2=126(LC 16)
Max Uplift 2=-92(LC 13), 12=-140(LC 12)
Max Grav 2=1739(LC 2), 12=1677(LC 38)

FORCES. (lb) - Max. Comp./Max. Ten. - All forces 250 (lb) or less except when shown.
TOP CHORD 2-3=-3090/267, 3-4=-2985/242, 4-5=-2623/237, 5-7=-4150/422, 7-8=-3307/342, 8-10=-896/94, 10-11=-977/86, 11-12=-1693/128
BOT CHORD 2-20=-285/2652, 18-20=-416/4150, 16-18=-437/4275, 14-16=-437/4275, 13-14=-335/3307
WEBS 4-20=-13/953, 5-20=-1794/247, 5-18=0/373, 7-16=0/317, 7-14=-1169/115, 8-14=0/728, 8-13=-2713/299, 11-13=-119/1586

NOTES-
1) Unbalanced roof live loads have been considered for this design.
2) Wind: ASCE 7-10; Vult=120mph Vasd=95mph; TCDL=6.0psf; BCDL=6.0psf; h=25ft; Cat. II; Exp B; Enclosed; MWFRS (envelope) gable end zone and C-C Exterior(2) -0-10-8 to 2-1-8, Interior(1) 2-1-8 to 8-3-0, Exterior(2) 8-3-0 to 12-5-15, Interior(1) 12-5-15 to 39-9-0, Exterior(2) 39-9-0 to 42-0-12 zone;C-C for members and forces & MWFRS for reactions shown; Lumber DOL=1.60 plate grip DOL=1.60
3) TCLL: ASCE 7-10; Pr=20.0 psf (roof live load: Lumber DOL=1.15 Plate DOL=1.15); Pg=15.0 psf (ground snow); Pf=16.5 psf (flat roof snow: Lumber DOL=1.15 Plate DOL=1.15); Category II; Exp B; Partially Exp.; Ct=1.10, Lu=50-0-0; Min. flat roof snow load governs. Rain surcharge applied to all exposed surfaces with slopes less than 0.500/12 in accordance with IBC 1608.3.4.
4) Unbalanced snow loads have been considered for this design.
5) This truss has been designed for greater of min roof live load of 12.0 psf or 1.00 times flat roof load of 11.6 psf on overhangs non-concurrent with other live loads.
6) Provide adequate drainage to prevent water ponding.
7) All plates are MT20 plates unless otherwise indicated.
8) This truss has been designed for a 10.0 psf bottom chord live load nonconcurrent with any other live loads.
9) * This truss has been designed for a live load of 20.0psf on the bottom chord in all areas where a rectangle 3-6-0 tall by 2-0-0 wide will fit between the bottom chord and any other members.
10) Refer to girder(s) for truss to truss connections.
11) Provide mechanical connection (by others) of truss to bearing plate capable of withstanding 100 lb uplift at joint(s) except (jt=lb) 12=140.
12) One RT7A USP connectors recommended to connect truss to bearing walls due to UPLIFT at jt(s) 2. This connection is for uplift only and does not consider lateral forces.
13) Graphical purlin representation does not depict the size or the orientation of the purlin along the top and/or bottom chord.

February 22,2021

WARNING - Verify design parameters and READ NOTES ON THIS AND INCLUDED MITEK REFERENCE PAGE MII-7473 rev. 5/19/2020 BEFORE USE.
Design valid for use only with MiTek® connectors. This design is based only upon parameters shown, and is for an individual building component, not a truss system. Before use, the building designer must verify the applicability of design parameters and properly incorporate this design into the overall building design. Bracing indicated is to prevent buckling of individual truss web and/or chord members only. Additional temporary and permanent bracing is always required for stability and to prevent collapse with possible personal injury and property damage. For general guidance regarding the fabrication, storage, delivery, erection and bracing of trusses and truss systems, see **ANSI/TPI1 Quality Criteria, DSB-89 and BCSI Building Component Safety Information** available from Truss Plate Institute, 2670 Crain Highway, Suite 203 Waldorf, MD 20601

ENGINEERING BY TRENCO A MiTek Affiliate
818 Soundside Road
Edenton, NC 27932

Job	Truss	Truss Type	Qty	Ply	KB Home 150.1910 C2
150_1910_C2	H2	Hip	1	1	I44899793 Job Reference (optional)

84 Components (Dunn), Dunn, NC - 28334, 8.430 s Feb 12 2021 MiTek Industries, Inc. Mon Feb 22 09:04:00 2021 Page 1
ID:VMD62rz1yiHD_OqRtbnrlFztQ8K-pOSAU5LpIWUEraW1bR2RVAxqq8lO?ik6xsNJ36zidsT

-0-10-8	5-6-15	10-11-0	17-5-8	24-0-0	30-6-8	37-1-0	42-2-8
0-10-8	5-6-15	5-4-1	6-6-8	6-6-8	6-6-8	6-6-8	5-1-8

Scale = 1:75.1

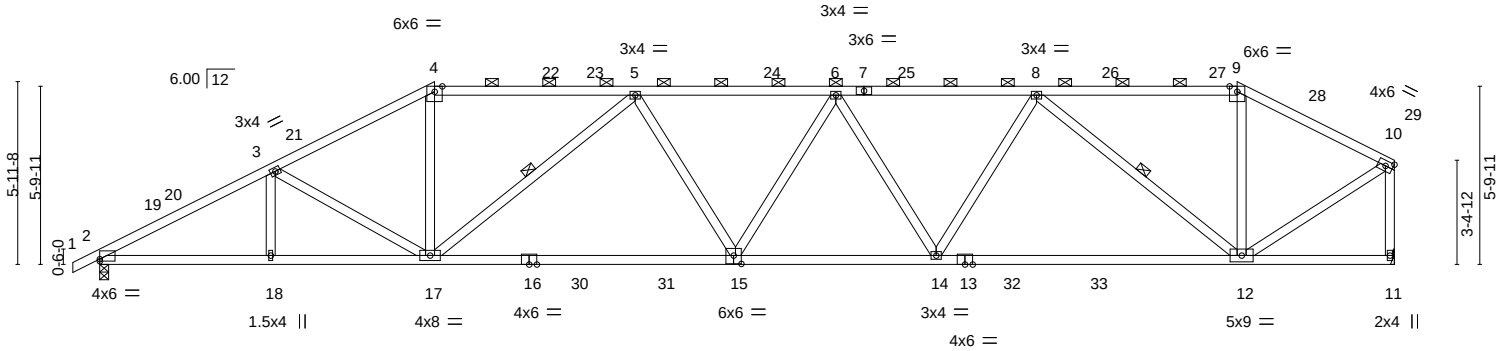

5-6-15	10-11-0	20-8-12	27-3-4	37-1-0	42-2-8
5-6-15	5-4-1	9-9-12	6-6-8	9-9-12	5-1-8

Plate Offsets (X,Y)-- [2:0-0-0,0-0-13], [15:0-3-0,0-3-4]

LOADING (psf)		**SPACING-**	2-0-0	**CSI.**		**DEFL.**	in	(loc)	l/defl	L/d	**PLATES**	**GRIP**
TCLL (roof)	20.0	Plate Grip DOL	1.15	TC	0.98	Vert(LL)	-0.34	15-17	>999	240	MT20	197/144
Snow (Pf/Pg)	16.5/15.0	Lumber DOL	1.15	BC	0.95	Vert(CT)	-0.74	15-17	>681	180		
TCDL	10.0	Rep Stress Incr	YES	WB	0.71	Horz(CT)	0.15	11	n/a	n/a		
BCLL	0.0 *	Code IRC2015/TPI2014		Matrix-S							Weight: 232 lb	FT = 20%
BCDL	10.0											

LUMBER-
TOP CHORD 2x4 SP No.2 or 2x4 SPF No.2
BOT CHORD 2x4 SP No.1
WEBS 2x4 SP No.3

BRACING-
TOP CHORD Structural wood sheathing directly applied or 2-9-1 oc purlins, except end verticals, and 2-0-0 oc purlins (2-2-0 max.): 4-9.
BOT CHORD Rigid ceiling directly applied or 10-0-0 oc bracing, Except: 2-2-0 oc bracing: 15-17.
WEBS 1 Row at midpt 5-17, 8-12

REACTIONS. (size) 2=0-3-8, 11=Mechanical
Max Horz 2=145(LC 16)
Max Uplift 2=-59(LC 13), 11=-94(LC 12)
Max Grav 2=1739(LC 2), 11=1676(LC 2)

FORCES. (lb) - Max. Comp./Max. Ten. - All forces 250 (lb) or less except when shown.
TOP CHORD 2-3=-3153/238, 3-4=-2797/239, 4-5=-2427/245, 5-6=-3260/277, 6-8=-3007/254, 8-9=-1362/150, 9-10=-1551/138, 10-11=-1654/149
BOT CHORD 2-18=-248/2703, 17-18=-248/2703, 15-17=-287/3190, 14-15=-283/3235, 12-14=-240/2683
WEBS 3-17=-454/143, 4-17=-2/894, 5-17=-1061/192, 5-15=0/251, 6-14=-501/99, 8-14=0/690, 8-12=-1716/218, 9-12=0/400, 10-12=-85/1627

NOTES-
1) Unbalanced roof live loads have been considered for this design.
2) Wind: ASCE 7-10; Vult=120mph Vasd=95mph; TCDL=6.0psf; BCDL=6.0psf; h=25ft; Cat. II; Exp B; Enclosed; MWFRS (envelope) gable end zone and C-C Exterior(2) -0-10-8 to 2-1-8, Interior(1) 2-1-8 to 10-11-0, Exterior(2) 10-11-0 to 15-1-15, Interior(1) 15-1-15 to 37-1-0, Exterior(2) 37-1-0 to 41-3-15, Interior(1) 41-3-15 to 42-0-12 zone;C-C for members and forces & MWFRS for reactions shown; Lumber DOL=1.60 plate grip DOL=1.60
3) TCLL: ASCE 7-10; Pr=20.0 psf (roof live load: Lumber DOL=1.15 Plate DOL=1.15); Pg=15.0 psf (ground snow); Pf=16.5 psf (flat roof snow: Lumber DOL=1.15 Plate DOL=1.15); Category II; Exp B; Partially Exp.; Ct=1.10, Lu=50-0-0; Min. flat roof snow load governs. Rain surcharge applied to all exposed surfaces with slopes less than 0.500/12 in accordance with IBC 1608.3.4.
4) Unbalanced snow loads have been considered for this design.
5) This truss has been designed for greater of min roof live load of 12.0 psf or 1.00 times flat roof load of 11.6 psf on overhangs non-concurrent with other live loads.
6) Provide adequate drainage to prevent water ponding.
7) This truss has been designed for a 10.0 psf bottom chord live load nonconcurrent with any other live loads.
8) * This truss has been designed for a live load of 20.0psf on the bottom chord in all areas where a rectangle 3-6-0 tall by 2-0-0 wide will fit between the bottom chord and any other members, with BCDL = 10.0psf.
9) Refer to girder(s) for truss to truss connections.
10) Provide mechanical connection (by others) of truss to bearing plate capable of withstanding 100 lb uplift at joint(s) 11.
11) One RT7A USP connectors recommended to connect truss to bearing walls due to UPLIFT at jt(s) 2. This connection is for uplift only and does not consider lateral forces.
12) Graphical purlin representation does not depict the size or the orientation of the purlin along the top and/or bottom chord.

February 22,2021

WARNING - Verify design parameters and READ NOTES ON THIS AND INCLUDED MITEK REFERENCE PAGE MII-7473 rev. 5/19/2020 BEFORE USE.
Design valid for use only with MiTek® connectors. This design is based only upon parameters shown, and is for an individual building component, not a truss system. Before use, the building designer must verify the applicability of design parameters and properly incorporate this design into the overall building design. Bracing indicated is to prevent buckling of individual truss web and/or chord members only. Additional temporary and permanent bracing is always required for stability and to prevent collapse with possible personal injury and property damage. For general guidance regarding the fabrication, storage, delivery, erection and bracing of trusses and truss systems, see **ANSI/TPI1 Quality Criteria, DSB-89 and BCSI Building Component Safety Information** available from Truss Plate Institute, 2670 Crain Highway, Suite 203 Waldorf, MD 20601

ENGINEERING BY TRENCO A MiTek Affiliate
818 Soundside Road
Edenton, NC 27932

Job	Truss	Truss Type	Qty	Ply	KB Home 150.1910 C2
150_1910_C2	H3	Hip	1	1	I44899794
					Job Reference (optional)

84 Components (Dunn), Dunn, NC - 28334, 8.430 s Feb 12 2021 MiTek Industries, Inc. Mon Feb 22 09:04:02 2021 Page 1
ID:VMD62rz1yiHD_OqRtbnrlFztQ8K-lnaxvnN3p7ly4tfPis4vab1AZyRXTYkPPAsQ7_zidsR

-0-10-8	6-10-15	13-7-0	24-0-0	34-5-0	38-3-12	42-2-8
0-10-8	6-10-15	6-8-1	10-5-0	10-5-0	3-10-12	3-10-12

Scale = 1:76.5

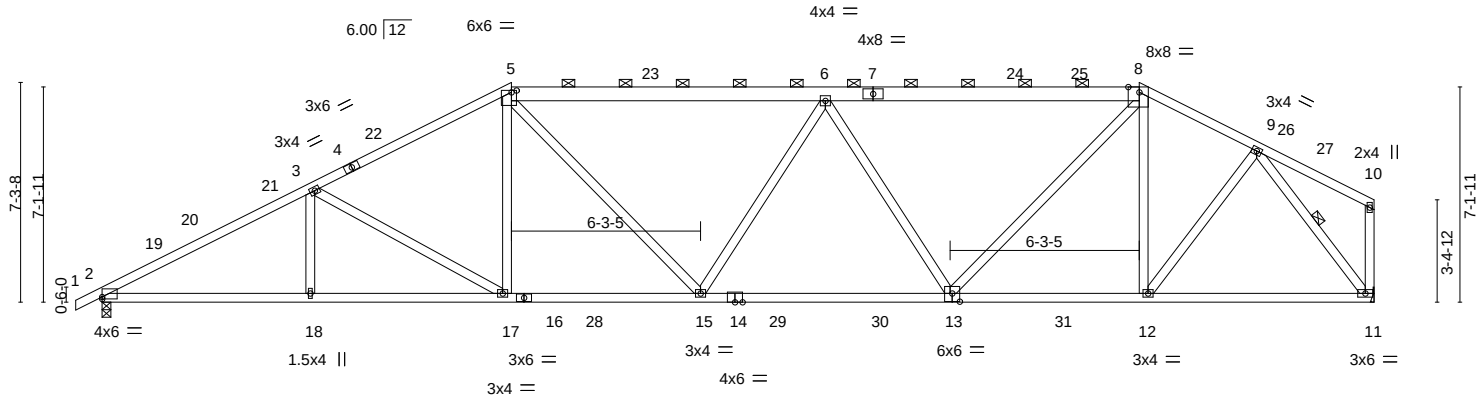

6-10-15	13-7-0	19-10-5	28-1-11	34-5-0	42-2-8
6-10-15	6-8-1	6-3-5	8-3-6	6-3-5	7-9-8

Plate Offsets (X,Y)-- [2:0-0-0,0-0-13], [5:0-2-0,0-0-12], [8:0-4-6,Edge], [13:0-3-0,0-3-4]

LOADING (psf)		**SPACING-**	2-0-0	**CSI.**		**DEFL.**	in	(loc)	l/defl	L/d	**PLATES**	**GRIP**
TCLL (roof)	20.0	Plate Grip DOL	1.15	TC	0.97	Vert(LL)	-0.23	13-15	>999	240	MT20	197/144
Snow (Pf/Pg)	16.5/15.0	Lumber DOL	1.15	BC	0.91	Vert(CT)	-0.46	13-15	>999	180		
TCDL	10.0	Rep Stress Incr	YES	WB	1.00	Horz(CT)	0.14	11	n/a	n/a		
BCLL	0.0 *	Code IRC2015/TPI2014		Matrix-S							Weight: 256 lb	FT = 20%
BCDL	10.0											

LUMBER-
TOP CHORD 2x4 SP No.2 or 2x4 SPF No.2 *Except* 5-7,7-8: 2x6 SP No.2
BOT CHORD 2x4 SP No.2 or 2x4 SPF No.2 *Except* 13-14,14-16: 2x4 SP No.1
WEBS 2x4 SP No.3

BRACING-
TOP CHORD Structural wood sheathing directly applied, except end verticals, and 2-0-0 oc purlins (2-2-0 max.): 5-8.
BOT CHORD Rigid ceiling directly applied or 10-0-0 oc bracing.
WEBS 1 Row at midpt 9-11

REACTIONS. (size) 2=0-3-8, 11=Mechanical
Max Horz 2=164(LC 16)
Max Uplift 2=-56(LC 16), 11=-45(LC 12)
Max Grav 2=1739(LC 2), 11=1676(LC 2)

FORCES. (lb) - Max. Comp./Max. Ten. - All forces 250 (lb) or less except when shown.
TOP CHORD 2-3=-3139/221, 3-5=-2604/248, 5-6=-2598/252, 6-8=-2343/225, 8-9=-1751/191
BOT CHORD 2-18=-222/2688, 17-18=-222/2688, 15-17=-150/2251, 13-15=-208/2772, 12-13=-78/1569, 11-12=-92/1133
WEBS 3-18=0/294, 3-17=-637/152, 5-17=-2/442, 5-15=-80/608, 6-15=-344/179, 6-13=-824/179, 8-13=-89/1148, 8-12=-494/120, 9-12=-41/797, 9-11=-1850/163

NOTES-
1) Unbalanced roof live loads have been considered for this design.
2) Wind: ASCE 7-10; Vult=120mph Vasd=95mph; TCDL=6.0psf; BCDL=6.0psf; h=25ft; Cat. II; Exp B; Enclosed; MWFRS (envelope) gable end zone and C-C Exterior(2) -0-10-8 to 2-1-8, Interior(1) 2-1-8 to 13-7-0, Exterior(2) 13-7-0 to 17-9-15, Interior(1) 17-9-15 to 34-5-0, Exterior(2) 34-5-0 to 38-7-15, Interior(1) 38-7-15 to 42-0-12 zone;C-C for members and forces & MWFRS for reactions shown; Lumber DOL=1.60 plate grip DOL=1.60
3) TCLL: ASCE 7-10; Pr=20.0 psf (roof live load: Lumber DOL=1.15 Plate DOL=1.15); Pg=15.0 psf (ground snow); Pf=16.5 psf (flat roof snow: Lumber DOL=1.15 Plate DOL=1.15); Category II; Exp B; Partially Exp.; Ct=1.10, Lu=50-0-0; Min. flat roof snow load governs. Rain surcharge applied to all exposed surfaces with slopes less than 0.500/12 in accordance with IBC 1608.3.4.
4) Unbalanced snow loads have been considered for this design.
5) This truss has been designed for greater of min roof live load of 12.0 psf or 1.00 times flat roof load of 11.6 psf on overhangs non-concurrent with other live loads.
6) Provide adequate drainage to prevent water ponding.
7) This truss has been designed for a 10.0 psf bottom chord live load nonconcurrent with any other live loads.
8) * This truss has been designed for a live load of 20.0psf on the bottom chord in all areas where a rectangle 3-6-0 tall by 2-0-0 wide will fit between the bottom chord and any other members, with BCDL = 10.0psf.
9) Refer to girder(s) for truss to truss connections.
10) Provide mechanical connection (by others) of truss to bearing plate capable of withstanding 100 lb uplift at joint(s) 11.
11) One RT7A USP connectors recommended to connect truss to bearing walls due to UPLIFT at jt(s) 2. This connection is for uplift only and does not consider lateral forces.
12) Graphical purlin representation does not depict the size or the orientation of the purlin along the top and/or bottom chord.

February 22,2021

WARNING - Verify design parameters and READ NOTES ON THIS AND INCLUDED MITEK REFERENCE PAGE MII-7473 rev. 5/19/2020 BEFORE USE.
Design valid for use only with MiTek® connectors. This design is based only upon parameters shown, and is for an individual building component, not a truss system. Before use, the building designer must verify the applicability of design parameters and properly incorporate this design into the overall building design. Bracing indicated is to prevent buckling of individual truss web and/or chord members only. Additional temporary and permanent bracing is always required for stability and to prevent collapse with possible personal injury and property damage. For general guidance regarding the fabrication, storage, delivery, erection and bracing of trusses and truss systems, see **ANSI/TPI1 Quality Criteria, DSB-89 and BCSI Building Component Safety Information** available from Truss Plate Institute, 2670 Crain Highway, Suite 203 Waldorf, MD 20601

ENGINEERING BY TRENCO A MiTek Affiliate
818 Soundside Road
Edenton, NC 27932

Job	Truss	Truss Type	Qty	Ply	KB Home 150.1910 C2
150_1910_C2	H4	Hip	1	1	I44899795 Job Reference (optional)

84 Components (Dunn), Dunn, NC - 28334, 8.430 s Feb 12 2021 MiTek Industries, Inc. Mon Feb 22 09:04:04 2021 Page 1
ID:VMD62rz1yiHD_OqRtbnrlFztQ8K-hAhhKSOJLl?fKBpoqH7Nf06cZm6sxXDisULWCtzidsP

-0-10-8	5-6-14	10-10-15	16-3-0	24-0-0	31-9-0	36-10-0	42-2-8
0-10-8	5-6-14	5-4-1	5-4-1	7-9-0	7-9-0	5-1-0	5-4-8

Scale = 1:76.5

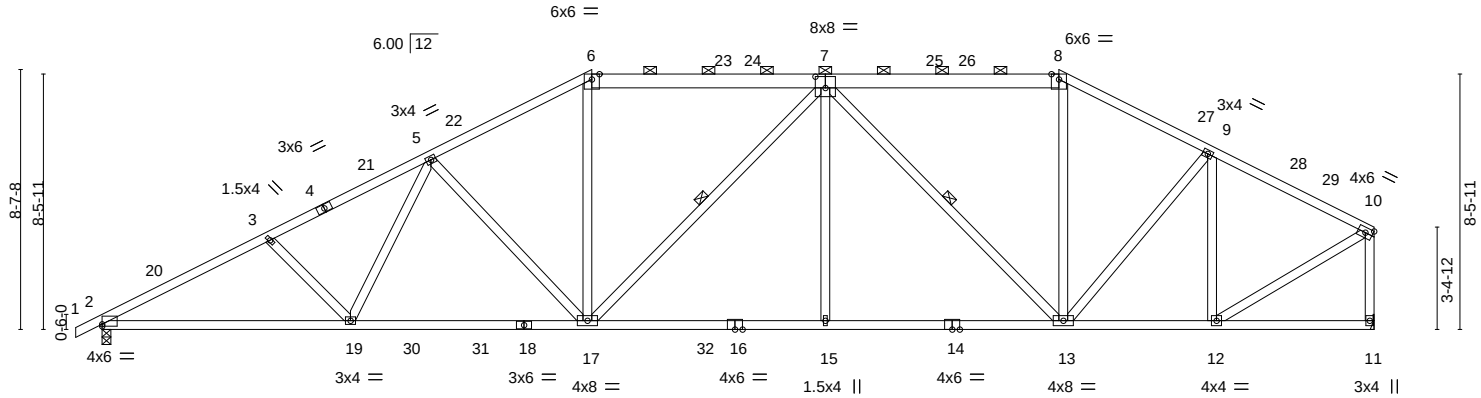

8-2-15	16-3-0	24-0-0	31-9-0	36-10-0	42-2-8
8-2-15	8-0-1	7-9-0	7-9-0	5-1-0	5-4-8

Plate Offsets (X,Y)-- [2:0-0-0,0-0-13], [7:0-4-0,0-4-8]

LOADING (psf)		**SPACING-**	2-0-0	**CSI.**		**DEFL.**	in	(loc)	l/defl	L/d	**PLATES**	**GRIP**
TCLL (roof)	20.0	Plate Grip DOL	1.15	TC	0.62	Vert(LL)	-0.21	17-19	>999	240	MT20	197/144
Snow (Pf/Pg)	16.5/15.0	Lumber DOL	1.15	BC	0.98	Vert(CT)	-0.39	17-19	>999	180		
TCDL	10.0	Rep Stress Incr	YES	WB	0.68	Horz(CT)	0.13	11	n/a	n/a		
BCLL	0.0 *	Code IRC2015/TPI2014		Matrix-S							Weight: 270 lb	FT = 20%
BCDL	10.0											

LUMBER-
TOP CHORD 2x4 SP No.2 or 2x4 SPF No.2 *Except* 6-7,7-8: 2x6 SP No.2
BOT CHORD 2x4 SP No.2 or 2x4 SPF No.2
WEBS 2x4 SP No.3

BRACING-
TOP CHORD Structural wood sheathing directly applied or 2-7-6 oc purlins, except end verticals, and 2-0-0 oc purlins (4-9-6 max.): 6-8.
BOT CHORD Rigid ceiling directly applied or 2-2-0 oc bracing.
WEBS 1 Row at midpt 7-17, 7-13

REACTIONS. (size) 2=0-3-8, 11=Mechanical
Max Horz 2=183(LC 16)
Max Uplift 2=-77(LC 16), 11=-10(LC 17)
Max Grav 2=1739(LC 2), 11=1676(LC 2)

FORCES. (lb) - Max. Comp./Max. Ten. - All forces 250 (lb) or less except when shown.
TOP CHORD 2-3=-3107/214, 3-5=-2915/219, 5-6=-2363/248, 6-7=-2066/255, 7-8=-1604/218, 8-9=-1850/214, 9-10=-1582/147, 10-11=-1623/155
BOT CHORD 2-19=-226/2679, 17-19=-178/2391, 15-17=-117/2248, 13-15=-117/2248, 12-13=-85/1360
WEBS 5-19=-7/407, 5-17=-601/157, 6-17=0/730, 7-17=-432/120, 7-15=0/430, 7-13=-983/103, 8-13=0/509, 9-13=-46/514, 9-12=-714/111, 10-12=-98/1557

NOTES-
1) Unbalanced roof live loads have been considered for this design.
2) Wind: ASCE 7-10; Vult=120mph Vasd=95mph; TCDL=6.0psf; BCDL=6.0psf; h=25ft; Cat. II; Exp B; Enclosed; MWFRS (envelope) gable end zone and C-C Exterior(2) -0-10-8 to 2-1-8, Interior(1) 2-1-8 to 16-3-0, Exterior(2) 16-3-0 to 20-5-15, Interior(1) 20-5-15 to 31-9-0, Exterior(2) 31-9-0 to 35-11-15, Interior(1) 35-11-15 to 42-0-12 zone;C-C for members and forces & MWFRS for reactions shown; Lumber DOL=1.60 plate grip DOL=1.60
3) TCLL: ASCE 7-10; Pr=20.0 psf (roof live load: Lumber DOL=1.15 Plate DOL=1.15); Pg=15.0 psf (ground snow); Pf=16.5 psf (flat roof snow: Lumber DOL=1.15 Plate DOL=1.15); Category II; Exp B; Partially Exp.; Ct=1.10, Lu=50-0-0; Min. flat roof snow load governs. Rain surcharge applied to all exposed surfaces with slopes less than 0.500/12 in accordance with IBC 1608.3.4.
4) Unbalanced snow loads have been considered for this design.
5) This truss has been designed for greater of min roof live load of 12.0 psf or 1.00 times flat roof load of 11.6 psf on overhangs non-concurrent with other live loads.
6) Provide adequate drainage to prevent water ponding.
7) This truss has been designed for a 10.0 psf bottom chord live load nonconcurrent with any other live loads.
8) * This truss has been designed for a live load of 20.0psf on the bottom chord in all areas where a rectangle 3-6-0 tall by 2-0-0 wide will fit between the bottom chord and any other members, with BCDL = 10.0psf.
9) Refer to girder(s) for truss to truss connections.
10) Provide mechanical connection (by others) of truss to bearing plate capable of withstanding 100 lb uplift at joint(s) 11.
11) One RT7A USP connectors recommended to connect truss to bearing walls due to UPLIFT at jt(s) 2. This connection is for uplift only and does not consider lateral forces.
12) Graphical purlin representation does not depict the size or the orientation of the purlin along the top and/or bottom chord.

February 22,2021

WARNING - Verify design parameters and READ NOTES ON THIS AND INCLUDED MITEK REFERENCE PAGE MII-7473 rev. 5/19/2020 BEFORE USE.
Design valid for use only with MiTek® connectors. This design is based only upon parameters shown, and is for an individual building component, not a truss system. Before use, the building designer must verify the applicability of design parameters and properly incorporate this design into the overall building design. Bracing indicated is to prevent buckling of individual truss web and/or chord members only. Additional temporary and permanent bracing is always required for stability and to prevent collapse with possible personal injury and property damage. For general guidance regarding the fabrication, storage, delivery, erection and bracing of trusses and truss systems, see **ANSI/TPI1 Quality Criteria, DSB-89 and BCSI Building Component Safety Information** available from Truss Plate Institute, 2670 Crain Highway, Suite 203 Waldorf, MD 20601

ENGINEERING BY TRENCO A MiTek Affiliate
818 Soundside Road
Edenton, NC 27932

Job	Truss	Truss Type	Qty	Ply	KB Home 150.1910 C2
150_1910_C2	H5	Hip	1	1	I44899796
					Job Reference (optional)

84 Components (Dunn), Dunn, NC - 28334, 8.430 s Feb 12 2021 MiTek Industries, Inc. Mon Feb 22 09:04:06 2021 Page 1

ID:VMD62rz1yiHD_OqRtbnrlFztQ8K-dYpRl8QatMFNZVzAxi9rkRBwQZraPRr?KoqdGmzidsN

-0-10-8	6-5-9	12-8-4	18-11-0	24-0-0	29-1-0	35-6-0	42-2-8
0-10-8	6-5-9	6-2-12	6-2-12	5-1-0	5-1-0	6-5-0	6-8-8

Scale = 1:75.1

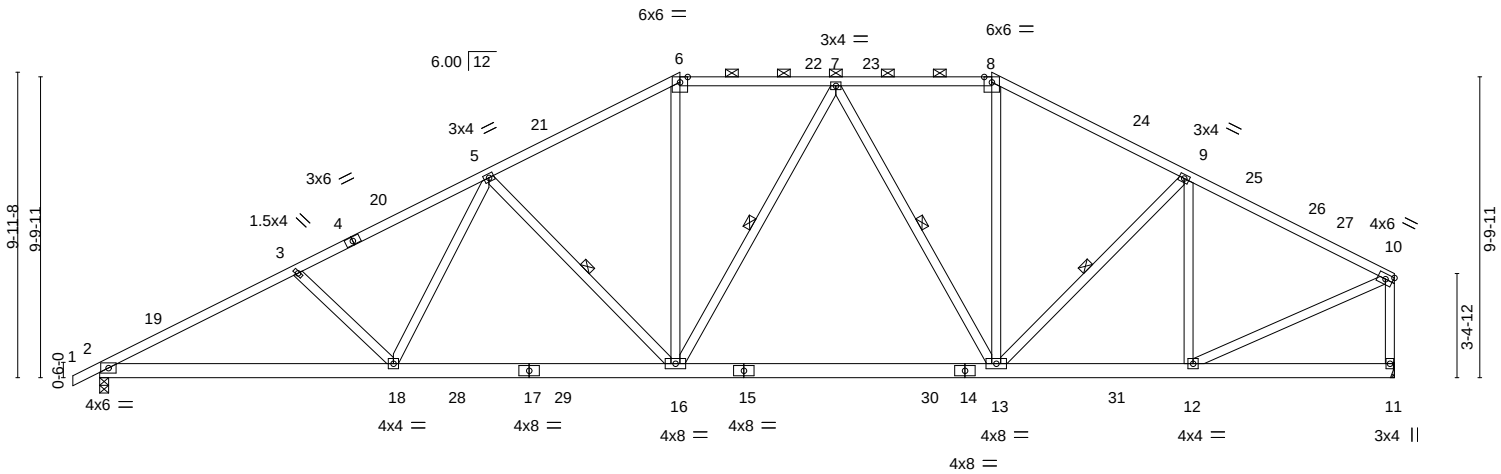

9-6-15	18-11-0	24-0-0	29-1-0	35-6-0	42-2-8
9-6-15	9-4-1	5-1-0	5-1-0	6-5-0	6-8-8

LOADING (psf)		**SPACING-**	2-0-0	**CSI.**		**DEFL.**	in	(loc)	l/defl	L/d	**PLATES**	**GRIP**
TCLL (roof)	20.0	Plate Grip DOL	1.15	TC	0.72	Vert(LL)	-0.20	13-16	>999	240	MT20	197/144
Snow (Pf/Pg)	16.5/15.0	Lumber DOL	1.15	BC	0.71	Vert(CT)	-0.38	13-16	>999	180		
TCDL	10.0	Rep Stress Incr	YES	WB	0.67	Horz(CT)	0.08	11	n/a	n/a		
BCLL	0.0 *	Code IRC2015/TPI2014		Matrix-S							Weight: 292 lb	FT = 20%
BCDL	10.0											

LUMBER-

TOP CHORD 2x4 SP No.2 or 2x4 SPF No.2
BOT CHORD 2x6 SP No.2
WEBS 2x4 SP No.3

BRACING-

TOP CHORD Structural wood sheathing directly applied or 2-7-11 oc purlins, except end verticals, and 2-0-0 oc purlins (4-0-10 max.): 6-8.
BOT CHORD Rigid ceiling directly applied or 10-0-0 oc bracing.
WEBS 1 Row at midpt 5-16, 7-16, 7-13, 9-13

REACTIONS. (size) 2=0-3-8, 11=Mechanical
Max Horz 2=202(LC 16)
Max Uplift 2=-96(LC 16), 11=-33(LC 17)
Max Grav 2=1739(LC 2), 11=1676(LC 2)

FORCES. (lb) - Max. Comp./Max. Ten. - All forces 250 (lb) or less except when shown.
TOP CHORD 2-3=-3143/207, 3-5=-2883/209, 5-6=-2204/237, 6-7=-1903/248, 7-8=-1639/229, 8-9=-1913/223, 9-10=-1758/158, 10-11=-1607/154
BOT CHORD 2-18=-272/2707, 16-18=-151/2314, 13-16=-82/1856, 12-13=-82/1514
WEBS 3-18=-294/169, 5-18=-9/501, 5-16=-721/190, 6-16=-6/701, 7-13=-575/106, 8-13=-6/569, 9-13=-36/321, 9-12=-577/112, 10-12=-85/1630

NOTES-

1) Unbalanced roof live loads have been considered for this design.
2) Wind: ASCE 7-10; Vult=120mph Vasd=95mph; TCDL=6.0psf; BCDL=6.0psf; h=25ft; Cat. II; Exp B; Enclosed; MWFRS (envelope) gable end zone and C-C Exterior(2) -0-10-8 to 2-1-8, Interior(1) 2-1-8 to 18-11-0, Exterior(2) 18-11-0 to 23-1-15, Interior(1) 23-1-15 to 29-1-0, Exterior(2) 29-1-0 to 33-3-15, Interior(1) 33-3-15 to 42-0-12 zone;C-C for members and forces & MWFRS for reactions shown; Lumber DOL=1.60 plate grip DOL=1.60
3) TCLL: ASCE 7-10; Pr=20.0 psf (roof live load: Lumber DOL=1.15 Plate DOL=1.15); Pg=15.0 psf (ground snow); Pf=16.5 psf (flat roof snow: Lumber DOL=1.15 Plate DOL=1.15); Category II; Exp B; Partially Exp.; Ct=1.10, Lu=50-0-0; Min. flat roof snow load governs. Rain surcharge applied to all exposed surfaces with slopes less than 0.500/12 in accordance with IBC 1608.3.4.
4) Unbalanced snow loads have been considered for this design.
5) This truss has been designed for greater of min roof live load of 12.0 psf or 1.00 times flat roof load of 11.6 psf on overhangs non-concurrent with other live loads.
6) Provide adequate drainage to prevent water ponding.
7) This truss has been designed for a 10.0 psf bottom chord live load nonconcurrent with any other live loads.
8) * This truss has been designed for a live load of 20.0psf on the bottom chord in all areas where a rectangle 3-6-0 tall by 2-0-0 wide will fit between the bottom chord and any other members, with BCDL = 10.0psf.
9) Refer to girder(s) for truss to truss connections.
10) Provide mechanical connection (by others) of truss to bearing plate capable of withstanding 100 lb uplift at joint(s) 11.
11) One RT7A USP connectors recommended to connect truss to bearing walls due to UPLIFT at jt(s) 2. This connection is for uplift only and does not consider lateral forces.
12) Graphical purlin representation does not depict the size or the orientation of the purlin along the top and/or bottom chord.

February 22,2021

WARNING - Verify design parameters and READ NOTES ON THIS AND INCLUDED MITEK REFERENCE PAGE MII-7473 rev. 5/19/2020 BEFORE USE.
Design valid for use only with MiTek® connectors. This design is based only upon parameters shown, and is for an individual building component, not a truss system. Before use, the building designer must verify the applicability of design parameters and properly incorporate this design into the overall building design. Bracing indicated is to prevent buckling of individual truss web and/or chord members only. Additional temporary and permanent bracing is always required for stability and to prevent collapse with possible personal injury and property damage. For general guidance regarding the fabrication, storage, delivery, erection and bracing of trusses and truss systems, see **ANSI/TPI1 Quality Criteria, DSB-89 and BCSI Building Component Safety Information** available from Truss Plate Institute, 2670 Crain Highway, Suite 203 Waldorf, MD 20601

ENGINEERING BY TRENCO A MiTek Affiliate
818 Soundside Road
Edenton, NC 27932

Job	Truss	Truss Type	Qty	Ply	KB Home 150.1910 C2
150_1910_C2	H6	Hip	1	1	I44899797 Job Reference (optional)

84 Components (Dunn), Dunn, NC - 28334, 8.430 s Feb 12 2021 MiTek Industries, Inc. Mon Feb 22 09:04:08 2021 Page 1
ID:VMD62rz1yiHD_OqRtbnrlFztQ8K-axxCAqRqPzV5oo7Z37BJpsHIcNUbtL8Hn5JkLezidsL

-0-10-8	6-5-9	12-8-4	18-11-0	23-1-8	29-1-0	32-10-0	36-7-0
0-10-8	6-5-9	6-2-12	6-2-12	4-2-8	5-11-8	3-9-0	3-9-0

Scale = 1:67.6

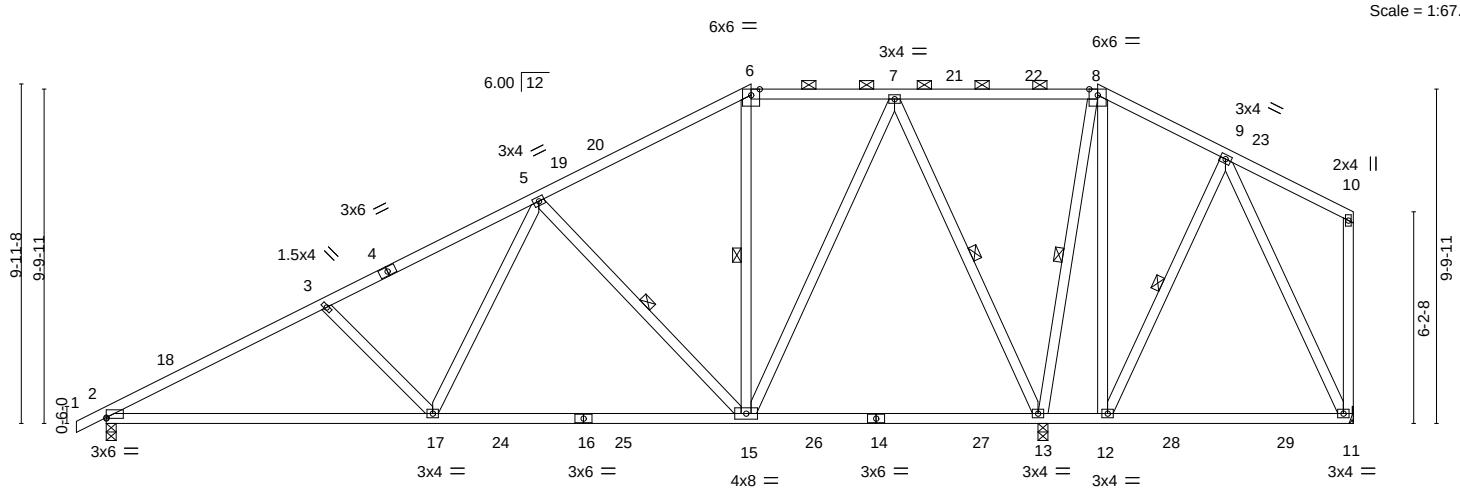

9-6-15	18-11-0	27-5-12	29-1-0	36-7-0
9-6-15	9-4-1	8-6-12	1-7-4	7-6-0

Plate Offsets (X,Y)-- [2:0-0-0,0-0-5]

LOADING (psf)		**SPACING-**	2-0-0	**CSI.**		**DEFL.**	in	(loc)	l/defl	L/d	**PLATES**	**GRIP**
TCLL (roof)	20.0	Plate Grip DOL	1.15	TC	0.61	Vert(LL)	-0.20	2-17	>999	240	MT20	197/144
Snow (Pf/Pg)	16.5/15.0	Lumber DOL	1.15	BC	0.93	Vert(CT)	-0.44	2-17	>752	180		
TCDL	10.0	Rep Stress Incr	YES	WB	0.69	Horz(CT)	0.03	13	n/a	n/a		
BCLL	0.0 *	Code IRC2015/TPI2014		Matrix-S							Weight: 250 lb	FT = 20%
BCDL	10.0											

LUMBER-
TOP CHORD 2x4 SP No.2 or 2x4 SPF No.2
BOT CHORD 2x4 SP No.2 or 2x4 SPF No.2
WEBS 2x4 SP No.3

BRACING-
TOP CHORD Structural wood sheathing directly applied or 3-10-5 oc purlins, except end verticals, and 2-0-0 oc purlins (6-0-0 max.): 6-8.
BOT CHORD Rigid ceiling directly applied or 2-2-0 oc bracing.
WEBS 1 Row at midpt 5-15, 6-15, 7-13, 8-13, 9-12

REACTIONS. (size) 2=0-3-8, 13=0-3-8, 11=Mechanical
Max Horz 2=255(LC 16)
Max Uplift 2=-64(LC 16), 13=-111(LC 16), 11=-267(LC 54)
Max Grav 2=1005(LC 2), 13=2078(LC 3), 11=132(LC 43)

FORCES. (lb) - Max. Comp./Max. Ten. - All forces 250 (lb) or less except when shown.
TOP CHORD 2-3=-1550/100, 3-5=-1298/85, 5-6=-551/99, 6-7=-428/125, 7-8=-9/430, 8-9=-26/352
BOT CHORD 2-17=-267/1313, 15-17=-143/895, 12-13=-305/66
WEBS 3-17=-330/173, 5-17=-9/539, 5-15=-758/189, 7-13=-1200/155, 8-13=-833/103, 8-12=-32/464, 9-12=-429/101, 9-11=-65/409, 7-15=-92/906

NOTES-
1) Unbalanced roof live loads have been considered for this design.
2) Wind: ASCE 7-10; Vult=120mph Vasd=95mph; TCDL=6.0psf; BCDL=6.0psf; h=25ft; Cat. II; Exp B; Enclosed; MWFRS (envelope) gable end zone and C-C Exterior(2) -0-10-8 to 2-1-8, Interior(1) 2-1-8 to 18-11-0, Exterior(2) 18-11-0 to 23-1-8, Interior(1) 23-1-8 to 29-1-0, Exterior(2) 29-1-0 to 33-3-15, Interior(1) 33-3-15 to 36-5-4 zone;C-C for members and forces & MWFRS for reactions shown; Lumber DOL=1.60 plate grip DOL=1.60
3) TCLL: ASCE 7-10; Pr=20.0 psf (roof live load: Lumber DOL=1.15 Plate DOL=1.15); Pg=15.0 psf (ground snow); Pf=16.5 psf (flat roof snow: Lumber DOL=1.15 Plate DOL=1.15); Category II; Exp B; Partially Exp.; Ct=1.10, Lu=50-0-0; Min. flat roof snow load governs. Rain surcharge applied to all exposed surfaces with slopes less than 0.500/12 in accordance with IBC 1608.3.4.
4) Unbalanced snow loads have been considered for this design.
5) This truss has been designed for greater of min roof live load of 12.0 psf or 1.00 times flat roof load of 11.6 psf on overhangs non-concurrent with other live loads.
6) Provide adequate drainage to prevent water ponding.
7) This truss has been designed for a 10.0 psf bottom chord live load nonconcurrent with any other live loads.
8) * This truss has been designed for a live load of 20.0psf on the bottom chord in all areas where a rectangle 3-6-0 tall by 2-0-0 wide will fit between the bottom chord and any other members, with BCDL = 10.0psf.
9) Refer to girder(s) for truss to truss connections.
10) Provide mechanical connection (by others) of truss to bearing plate capable of withstanding 100 lb uplift at joint(s) except (jt=lb) 13=111, 11=267.
11) One RT7A USP connectors recommended to connect truss to bearing walls due to UPLIFT at jt(s) 2. This connection is for uplift only and does not consider lateral forces.
12) Graphical purlin representation does not depict the size or the orientation of the purlin along the top and/or bottom chord.

February 22,2021

WARNING - Verify design parameters and READ NOTES ON THIS AND INCLUDED MITEK REFERENCE PAGE MII-7473 rev. 5/19/2020 BEFORE USE.
Design valid for use only with MiTek® connectors. This design is based only upon parameters shown, and is for an individual building component, not a truss system. Before use, the building designer must verify the applicability of design parameters and properly incorporate this design into the overall building design. Bracing indicated is to prevent buckling of individual truss web and/or chord members only. Additional temporary and permanent bracing is always required for stability and to prevent collapse with possible personal injury and property damage. For general guidance regarding the fabrication, storage, delivery, erection and bracing of trusses and truss systems, see **ANSI/TPI1 Quality Criteria, DSB-89 and BCSI Building Component Safety Information** available from Truss Plate Institute, 2670 Crain Highway, Suite 203 Waldorf, MD 20601

ENGINEERING BY TRENCO A MiTek Affiliate
818 Soundside Road
Edenton, NC 27932

Job	Truss	Truss Type	Qty	Ply	KB Home 150.1910 C2
150_1910_C2	H7	Hip	1	1	I44899798 Job Reference (optional)

84 Components (Dunn), Dunn, NC - 28334, 8.430 s Feb 12 2021 MiTek Industries, Inc. Mon Feb 22 09:04:10 2021 Page 1
ID:VMD62rz1yiHD_OqRtbnrlFztQ8K-WK3ybWT4xblp26GyAYDnvHMdaADlLEcaEPorPXzidsJ

5-6-14	10-10-15	16-3-0	24-0-0	31-9-0	36-7-0
5-6-14	5-4-1	5-4-1	7-9-0	7-9-0	4-10-0

Scale = 1:66.0

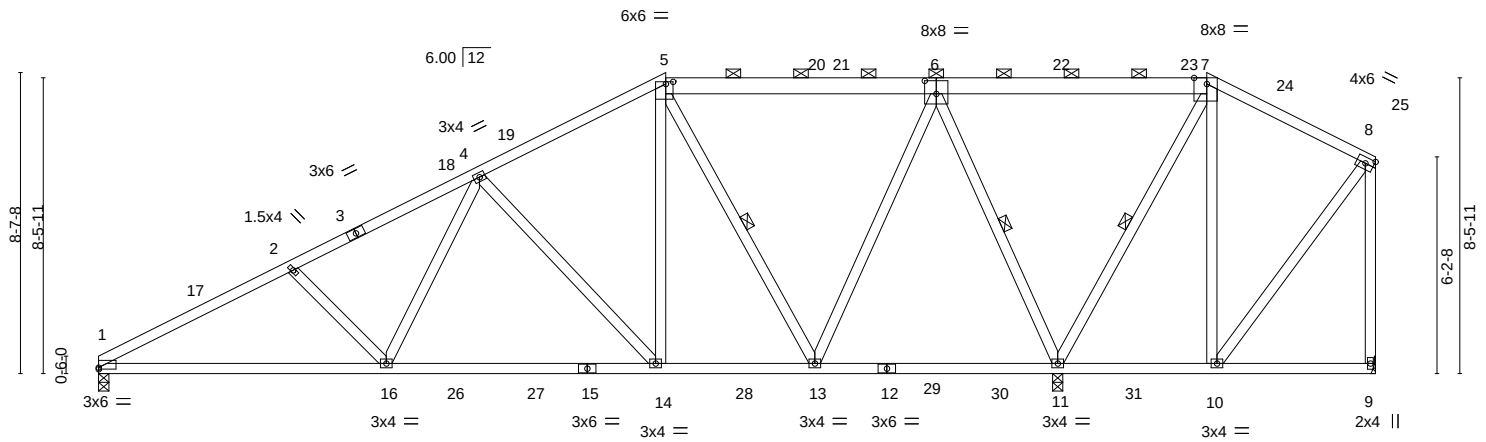

8-2-15	16-3-0	20-6-4	27-5-12	31-9-0	36-7-0
8-2-15	8-0-1	4-3-4	6-11-8	4-3-4	4-10-0

Plate Offsets (X,Y)-- [1:0-0-0,0-0-9], [5:0-2-8,0-0-12], [6:0-4-0,0-4-8], [7:0-4-6,Edge]

LOADING (psf)		**SPACING-**	2-0-0	**CSI.**		**DEFL.**	in	(loc)	l/defl	L/d	**PLATES**	**GRIP**
TCLL (roof)	20.0	Plate Grip DOL	1.15	TC	0.58	Vert(LL)	-0.12	14-16	>999	240	MT20	197/144
Snow (Pf/Pg)	16.5/15.0	Lumber DOL	1.15	BC	0.76	Vert(CT)	-0.26	1-16	>999	180		
TCDL	10.0	Rep Stress Incr	YES	WB	0.75	Horz(CT)	0.03	11	n/a	n/a		
BCLL	0.0 *	Code IRC2015/TPI2014		Matrix-S							Weight: 246 lb	FT = 20%
BCDL	10.0											

LUMBER-
TOP CHORD 2x4 SP No.2 or 2x4 SPF No.2 *Except*
6-7,5-6: 2x6 SP No.2
BOT CHORD 2x4 SP No.2 or 2x4 SPF No.2
WEBS 2x4 SP No.3

BRACING-
TOP CHORD Structural wood sheathing directly applied or 4-0-0 oc purlins, except end verticals, and 2-0-0 oc purlins (6-0-0 max.): 5-7.
BOT CHORD Rigid ceiling directly applied or 6-0-0 oc bracing.
WEBS 1 Row at midpt 5-13, 6-11, 7-11

REACTIONS. (size) 1=0-3-9, 11=0-3-8, 9=Mechanical
Max Horz 1=228(LC 16)
Max Uplift 1=-43(LC 16), 11=-103(LC 13), 9=-258(LC 53)
Max Grav 1=937(LC 53), 11=2118(LC 3), 9=73(LC 16)

FORCES. (lb) - Max. Comp./Max. Ten. - All forces 250 (lb) or less except when shown.
TOP CHORD 1-2=-1589/93, 2-4=-1378/80, 4-5=-741/97, 5-6=-334/74, 6-7=-27/553, 7-8=-34/265, 8-9=-49/300
BOT CHORD 1-16=-251/1352, 14-16=-143/985, 13-14=-47/603
WEBS 2-16=-271/153, 4-16=-6/465, 4-14=-663/156, 5-14=-45/630, 5-13=-697/112, 6-13=-36/837, 6-11=-1348/186, 7-11=-829/112, 7-10=-1/349, 8-10=-310/66

NOTES-
1) Unbalanced roof live loads have been considered for this design.
2) Wind: ASCE 7-10; Vult=120mph Vasd=95mph; TCDL=6.0psf; BCDL=6.0psf; h=25ft; Cat. II; Exp B; Enclosed; MWFRS (envelope) gable end zone and C-C Exterior(2) 0-1-13 to 3-1-13, Interior(1) 3-1-13 to 16-3-0, Exterior(2) 16-3-0 to 20-5-15, Interior(1) 20-5-15 to 31-9-0, Exterior(2) 31-9-0 to 35-11-15, Interior(1) 35-11-15 to 36-5-4 zone;C-C for members and forces & MWFRS for reactions shown; Lumber DOL=1.60 plate grip DOL=1.60
3) TCLL: ASCE 7-10; Pr=20.0 psf (roof live load: Lumber DOL=1.15 Plate DOL=1.15); Pg=15.0 psf (ground snow); Pf=16.5 psf (flat roof snow: Lumber DOL=1.15 Plate DOL=1.15); Category II; Exp B; Partially Exp.; Ct=1.10, Lu=50-0-0; Min. flat roof snow load governs. Rain surcharge applied to all exposed surfaces with slopes less than 0.500/12 in accordance with IBC 1608.3.4.
4) Unbalanced snow loads have been considered for this design.
5) Provide adequate drainage to prevent water ponding.
6) This truss has been designed for a 10.0 psf bottom chord live load nonconcurrent with any other live loads.
7) * This truss has been designed for a live load of 20.0psf on the bottom chord in all areas where a rectangle 3-6-0 tall by 2-0-0 wide will fit between the bottom chord and any other members, with BCDL = 10.0psf.
8) Refer to girder(s) for truss to truss connections.
9) Provide mechanical connection (by others) of truss to bearing plate capable of withstanding 100 lb uplift at joint(s) except (jt=lb) 11=103, 9=258.
10) One RT7A USP connectors recommended to connect truss to bearing walls due to UPLIFT at jt(s) 1. This connection is for uplift only and does not consider lateral forces.
11) Graphical purlin representation does not depict the size or the orientation of the purlin along the top and/or bottom chord.

February 22,2021

WARNING - Verify design parameters and READ NOTES ON THIS AND INCLUDED MITEK REFERENCE PAGE MII-7473 rev. 5/19/2020 BEFORE USE.
Design valid for use only with MiTek® connectors. This design is based only upon parameters shown, and is for an individual building component, not a truss system. Before use, the building designer must verify the applicability of design parameters and properly incorporate this design into the overall building design. Bracing indicated is to prevent buckling of individual truss web and/or chord members only. Additional temporary and permanent bracing is always required for stability and to prevent collapse with possible personal injury and property damage. For general guidance regarding the fabrication, storage, delivery, erection and bracing of trusses and truss systems, see **ANSI/TPI1 Quality Criteria, DSB-89 and BCSI Building Component Safety Information** available from Truss Plate Institute, 2670 Crain Highway, Suite 203 Waldorf, MD 20601

ENGINEERING BY TRENCO A MiTek Affiliate
818 Soundside Road
Edenton, NC 27932

Job	Truss	Truss Type	Qty	Ply	KB Home 150.1910 C2
150_1910_C2	H8	Hip	1	1	I44899799 Job Reference (optional)

84 Components (Dunn), Dunn, NC - 28334, 8.430 s Feb 12 2021 MiTek Industries, Inc. Mon Feb 22 09:04:12 2021 Page 1
ID:VMD62rz1yiHD_OqRtbnrlFztQ8K-SiAi?BULTC?XHQQKIzGF_iRvz_xip6GtijHxUPzidsH

6-10-15	13-7-0	20-5-12	27-5-11	34-5-0	36-7-0
6-10-15	6-8-1	6-10-12	6-11-15	6-11-5	2-2-0

Scale: 3/16"=1'

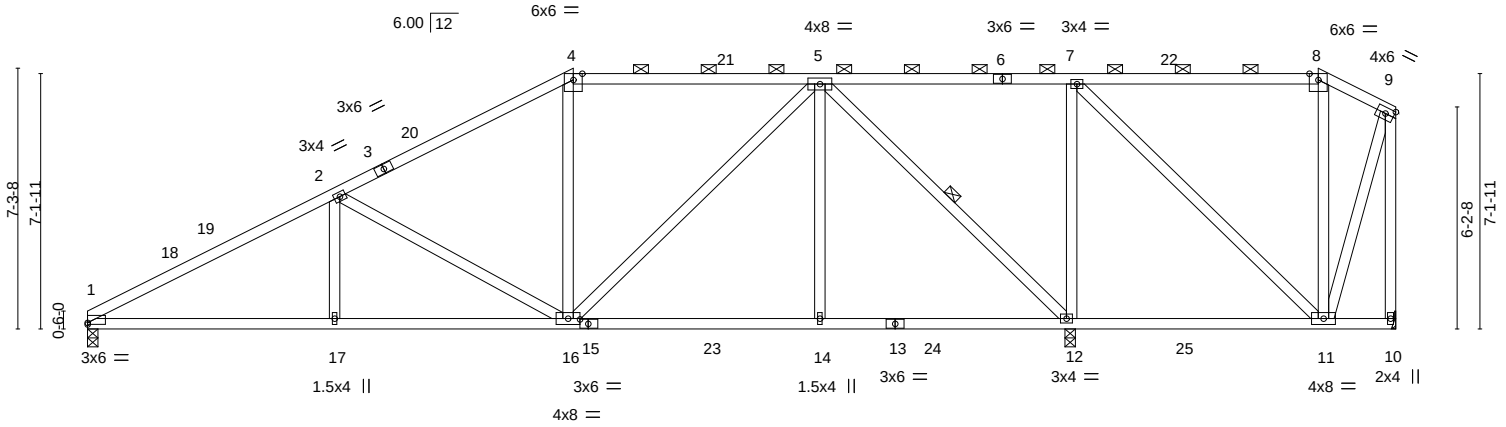

6-10-15	13-7-0	20-5-12	27-5-12	34-5-0	36-7-0
6-10-15	6-8-1	6-10-12	7-0-0	6-11-4	2-2-0

Plate Offsets (X,Y)-- [1:0-0-0,0-0-9], [15:0-2-12,0-1-8]

LOADING (psf)		**SPACING-**	2-0-0	**CSI.**		**DEFL.**	in	(loc)	l/defl	L/d	**PLATES**	**GRIP**
TCLL (roof)	20.0	Plate Grip DOL	1.15	TC	0.84	Vert(LL)	-0.07	1-17	>999	240	MT20	197/144
Snow (Pf/Pg)	16.5/15.0	Lumber DOL	1.15	BC	0.60	Vert(CT)	-0.17	1-17	>999	180		
TCDL	10.0	Rep Stress Incr	YES	WB	0.87	Horz(CT)	0.04	12	n/a	n/a		
BCLL	0.0 *	Code IRC2015/TPI2014		Matrix-S							Weight: 226 lb	FT = 20%
BCDL	10.0											

LUMBER-
TOP CHORD 2x4 SP No.2 or 2x4 SPF No.2
BOT CHORD 2x4 SP No.2 or 2x4 SPF No.2
WEBS 2x4 SP No.3

BRACING-
TOP CHORD Structural wood sheathing directly applied or 3-2-2 oc purlins, except end verticals, and 2-0-0 oc purlins (4-11-11 max.): 4-8.
BOT CHORD Rigid ceiling directly applied or 6-0-0 oc bracing.
WEBS 1 Row at midpt 5-12

REACTIONS. (size) 1=0-3-8, 12=0-3-8, 10=Mechanical
Max Horz 1=210(LC 16)
Max Uplift 1=-43(LC 16), 12=-136(LC 13), 10=-116(LC 55)
Max Grav 1=966(LC 53), 12=2034(LC 43), 10=60(LC 54)

FORCES. (lb) - Max. Comp./Max. Ten. - All forces 250 (lb) or less except when shown.
TOP CHORD 1-2=-1640/89, 2-4=-1066/107, 4-5=-867/135, 5-7=-6/465
BOT CHORD 1-17=-201/1390, 16-17=-201/1390, 14-16=-67/573, 12-14=-67/573, 11-12=-465/34
WEBS 2-17=0/291, 2-16=-723/160, 5-16=-87/597, 5-14=0/345, 5-12=-1367/116, 7-11=-47/640, 8-11=-310/99, 7-12=-951/164

NOTES-
1) Unbalanced roof live loads have been considered for this design.
2) Wind: ASCE 7-10; Vult=120mph Vasd=95mph; TCDL=6.0psf; BCDL=6.0psf; h=25ft; Cat. II; Exp B; Enclosed; MWFRS (envelope) gable end zone and C-C Exterior(2) 0-1-12 to 3-1-12, Interior(1) 3-1-12 to 13-7-0, Exterior(2) 13-7-0 to 17-9-15, Interior(1) 17-9-15 to 34-5-0, Exterior(2) 34-5-0 to 36-5-4 zone;C-C for members and forces & MWFRS for reactions shown; Lumber DOL=1.60 plate grip DOL=1.60
3) TCLL: ASCE 7-10; Pr=20.0 psf (roof live load: Lumber DOL=1.15 Plate DOL=1.15); Pg=15.0 psf (ground snow); Pf=16.5 psf (flat roof snow: Lumber DOL=1.15 Plate DOL=1.15); Category II; Exp B; Partially Exp.; Ct=1.10, Lu=50-0-0; Min. flat roof snow load governs. Rain surcharge applied to all exposed surfaces with slopes less than 0.500/12 in accordance with IBC 1608.3.4.
4) Unbalanced snow loads have been considered for this design.
5) Provide adequate drainage to prevent water ponding.
6) This truss has been designed for a 10.0 psf bottom chord live load nonconcurrent with any other live loads.
7) * This truss has been designed for a live load of 20.0psf on the bottom chord in all areas where a rectangle 3-6-0 tall by 2-0-0 wide will fit between the bottom chord and any other members, with BCDL = 10.0psf.
8) Refer to girder(s) for truss to truss connections.
9) Provide mechanical connection (by others) of truss to bearing plate capable of withstanding 100 lb uplift at joint(s) except (jt=lb) 10=116.
10) One RT7A USP connectors recommended to connect truss to bearing walls due to UPLIFT at jt(s) 1 and 12. This connection is for uplift only and does not consider lateral forces.
11) Graphical purlin representation does not depict the size or the orientation of the purlin along the top and/or bottom chord.

February 22,2021

WARNING - Verify design parameters and READ NOTES ON THIS AND INCLUDED MITEK REFERENCE PAGE MII-7473 rev. 5/19/2020 BEFORE USE.
Design valid for use only with MiTek® connectors. This design is based only upon parameters shown, and is for an individual building component, not a truss system. Before use, the building designer must verify the applicability of design parameters and properly incorporate this design into the overall building design. Bracing indicated is to prevent buckling of individual truss web and/or chord members only. Additional temporary and permanent bracing is always required for stability and to prevent collapse with possible personal injury and property damage. For general guidance regarding the fabrication, storage, delivery, erection and bracing of trusses and truss systems, see **ANSI/TPI1 Quality Criteria, DSB-89 and BCSI Building Component Safety Information** available from Truss Plate Institute, 2670 Crain Highway, Suite 203 Waldorf, MD 20601

ENGINEERING BY TRENCO A MiTek Affiliate
818 Soundside Road
Edenton, NC 27932

Job	Truss	Truss Type	Qty	Ply	KB Home 150.1910 C2
150_1910_C2	H9	Half Hip	1	1	I44899800 Job Reference (optional)

84 Components (Dunn), Dunn, NC - 28334, 8.430 s Feb 12 2021 MiTek Industries, Inc. Mon Feb 22 09:04:13 2021 Page 1
ID:VMD62rz1yiHD_OqRtbnrlFztQ8K-wuk5DXVzEW7Ova?WsgnUWv_4lOF2Ycd1xN1V0szidsG

5-6-15	10-11-0	17-3-2	23-7-4	29-11-6	36-7-0
5-6-15	5-4-1	6-4-2	6-4-2	6-4-2	6-7-10

Scale = 1:63.3

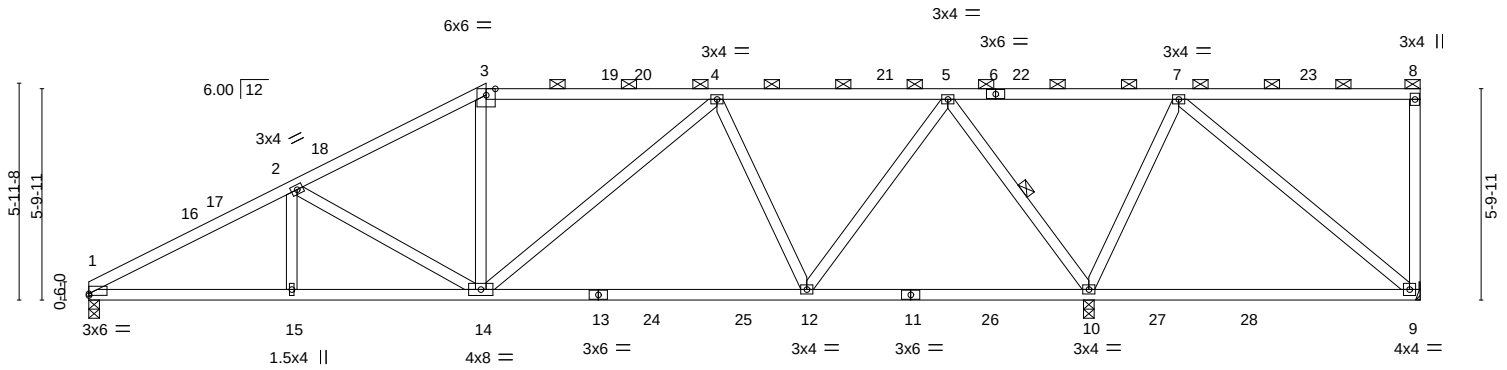

5-6-15	10-11-0	19-8-12	27-5-12	36-7-0
5-6-15	5-4-1	8-9-12	7-9-0	9-1-4

Plate Offsets (X,Y)-- [1:0-0-0,0-0-9]

LOADING (psf)		**SPACING-**	2-0-0	**CSI.**		**DEFL.**	in	(loc)	l/defl	L/d	**PLATES**	**GRIP**
TCLL (roof)	20.0	Plate Grip DOL	1.15	TC	0.84	Vert(LL)	-0.17	9-10	>620	240	MT20	197/144
Snow (Pf/Pg)	16.5/15.0	Lumber DOL	1.15	BC	0.65	Vert(CT)	-0.34	9-10	>313	180		
TCDL	10.0	Rep Stress Incr	YES	WB	0.67	Horz(CT)	0.04	10	n/a	n/a		
BCLL	0.0 *	Code IRC2015/TPI2014		Matrix-S							Weight: 200 lb	FT = 20%
BCDL	10.0											

LUMBER-
TOP CHORD 2x4 SP No.2 or 2x4 SPF No.2
BOT CHORD 2x4 SP No.2 or 2x4 SPF No.2
WEBS 2x4 SP No.3

BRACING-
TOP CHORD Structural wood sheathing directly applied or 3-11-15 oc purlins, except end verticals, and 2-0-0 oc purlins (4-11-7 max.): 3-8.
BOT CHORD Rigid ceiling directly applied or 6-0-0 oc bracing.
WEBS 1 Row at midpt 5-10

REACTIONS. (size) 1=0-3-8, 9=Mechanical, 10=0-3-8
Max Horz 1=183(LC 16)
Max Uplift 1=-30(LC 16), 9=-175(LC 35), 10=-186(LC 13)
Max Grav 1=937(LC 35), 9=29(LC 16), 10=2133(LC 34)

FORCES. (lb) - Max. Comp./Max. Ten. - All forces 250 (lb) or less except when shown.
TOP CHORD 1-2=-1621/100, 2-3=-1207/101, 3-4=-1013/123, 4-5=-585/47, 5-7=-82/768
BOT CHORD 1-15=-204/1377, 14-15=-204/1377, 12-14=-101/853, 9-10=-413/21
WEBS 2-14=-542/138, 3-14=0/282, 4-14=-54/389, 4-12=-657/146, 5-12=-42/933, 5-10=-1364/178, 7-10=-928/164, 7-9=-24/568

NOTES-
1) Unbalanced roof live loads have been considered for this design.
2) Wind: ASCE 7-10; Vult=120mph Vasd=95mph; TCDL=6.0psf; BCDL=6.0psf; h=25ft; Cat. II; Exp B; Enclosed; MWFRS (envelope) gable end zone and C-C Exterior(2) 0-1-12 to 3-1-12, Interior(1) 3-1-12 to 10-11-0, Exterior(2) 10-11-0 to 15-1-15, Interior(1) 15-1-15 to 36-5-4 zone;C-C for members and forces & MWFRS for reactions shown; Lumber DOL=1.60 plate grip DOL=1.60
3) TCLL: ASCE 7-10; Pr=20.0 psf (roof live load: Lumber DOL=1.15 Plate DOL=1.15); Pg=15.0 psf (ground snow); Pf=16.5 psf (flat roof snow: Lumber DOL=1.15 Plate DOL=1.15); Category II; Exp B; Partially Exp.; Ct=1.10, Lu=50-0-0; Min. flat roof snow load governs. Rain surcharge applied to all exposed surfaces with slopes less than 0.500/12 in accordance with IBC 1608.3.4.
4) Unbalanced snow loads have been considered for this design.
5) Provide adequate drainage to prevent water ponding.
6) This truss has been designed for a 10.0 psf bottom chord live load nonconcurrent with any other live loads.
7) * This truss has been designed for a live load of 20.0psf on the bottom chord in all areas where a rectangle 3-6-0 tall by 2-0-0 wide will fit between the bottom chord and any other members, with BCDL = 10.0psf.
8) Refer to girder(s) for truss to truss connections.
9) Provide mechanical connection (by others) of truss to bearing plate capable of withstanding 100 lb uplift at joint(s) except (jt=lb) 9=175, 10=186.
10) One RT7A USP connectors recommended to connect truss to bearing walls due to UPLIFT at jt(s) 1. This connection is for uplift only and does not consider lateral forces.
11) Graphical purlin representation does not depict the size or the orientation of the purlin along the top and/or bottom chord.

February 22,2021

WARNING - Verify design parameters and READ NOTES ON THIS AND INCLUDED MITEK REFERENCE PAGE MII-7473 rev. 5/19/2020 BEFORE USE.
Design valid for use only with MiTek® connectors. This design is based only upon parameters shown, and is for an individual building component, not a truss system. Before use, the building designer must verify the applicability of design parameters and properly incorporate this design into the overall building design. Bracing indicated is to prevent buckling of individual truss web and/or chord members only. Additional temporary and permanent bracing is always required for stability and to prevent collapse with possible personal injury and property damage. For general guidance regarding the fabrication, storage, delivery, erection and bracing of trusses and truss systems, see **ANSI/TPI1 Quality Criteria, DSB-89 and BCSI Building Component Safety Information** available from Truss Plate Institute, 2670 Crain Highway, Suite 203 Waldorf, MD 20601

ENGINEERING BY TRENCO A MiTek Affiliate
818 Soundside Road
Edenton, NC 27932

Job	Truss	Truss Type	Qty	Ply	KB Home 150.1910 C2
150_1910_C2	H10	Half Hip	1	1	I44899801 Job Reference (optional)

84 Components (Dunn), Dunn, NC - 28334, 8.430 s Feb 12 2021 MiTek Industries, Inc. Mon Feb 22 09:03:58 2021 Page 1
ID:VMD62rz1yiHD_OqRtbnrlFztQ8K-s0KQ3PKZmvEWcGMeT00zPlsU9L5lXrMpUYuC_DzidsV

4-2-15	8-3-0	14-6-2	22-3-4	30-0-6	36-7-0
4-2-15	4-0-1	6-3-2	7-9-2	7-9-2	6-6-10

Scale = 1:63.3

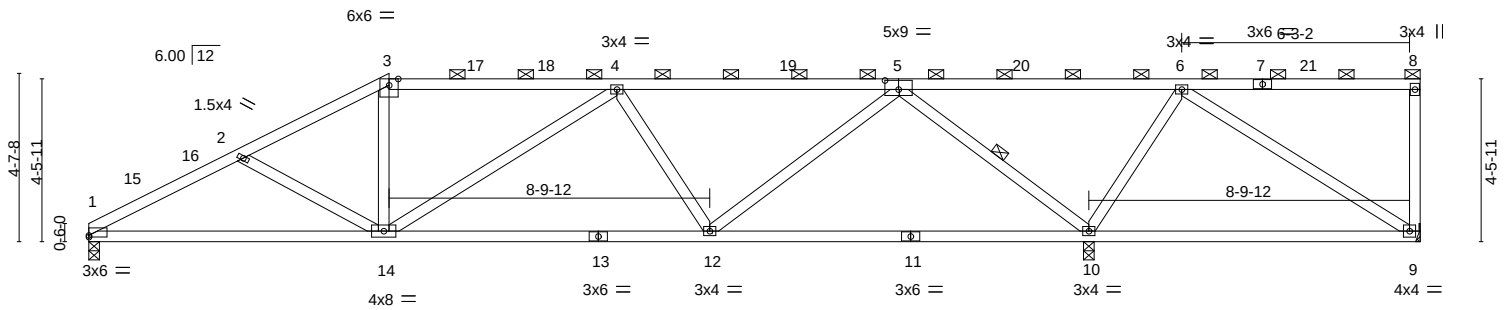

8-3-0	17-0-12	27-5-12	36-7-0
8-3-0	8-9-12	10-5-0	9-1-4

Plate Offsets (X,Y)-- [1:0-0-0,0-0-9], [5:0-4-8,0-3-0]

LOADING (psf)		**SPACING-** 2-0-0	**CSI.**	**DEFL.** in (loc) l/defl L/d	**PLATES**	**GRIP**
TCLL (roof)	20.0	Plate Grip DOL 1.15	TC 0.99	Vert(LL) -0.18 10-12 >999 240	MT20	197/144
Snow (Pf/Pg)	16.5/15.0	Lumber DOL 1.15	BC 0.83	Vert(CT) -0.38 10-12 >862 180		
TCDL	10.0	Rep Stress Incr YES	WB 0.51	Horz(CT) 0.04 10 n/a n/a		
BCLL	0.0 *	Code IRC2015/TPI2014	Matrix-S		Weight: 184 lb	FT = 20%
BCDL	10.0					

LUMBER-
TOP CHORD 2x4 SP No.2 or 2x4 SPF No.2
BOT CHORD 2x4 SP No.2 or 2x4 SPF No.2
WEBS 2x4 SP No.3

BRACING-
TOP CHORD Structural wood sheathing directly applied or 4-4-2 oc purlins, except end verticals, and 2-0-0 oc purlins (2-2-0 max.): 3-8.
BOT CHORD Rigid ceiling directly applied or 10-0-0 oc bracing, Except: 6-0-0 oc bracing: 9-10.
WEBS 1 Row at midpt 5-10

REACTIONS. (size) 1=0-3-8, 9=Mechanical, 10=0-3-8
Max Horz 1=139(LC 16)
Max Uplift 1=-18(LC 16), 9=-129(LC 35), 10=-211(LC 13)
Max Grav 1=935(LC 2), 9=14(LC 16), 10=2145(LC 34)

FORCES. (lb) - Max. Comp./Max. Ten. - All forces 250 (lb) or less except when shown.
TOP CHORD 1-2=-1609/154, 2-3=-1408/110, 3-4=-1208/126, 4-5=-1079/76, 5-6=-128/1013
BOT CHORD 1-14=-226/1371, 12-14=-147/1348, 10-12=-81/330, 9-10=-517/27
WEBS 2-14=-288/141, 3-14=0/377, 4-12=-518/142, 5-12=-7/1012, 5-10=-1701/262, 6-10=-1040/204, 6-9=-30/645

NOTES-
1) Unbalanced roof live loads have been considered for this design.
2) Wind: ASCE 7-10; Vult=120mph Vasd=95mph; TCDL=6.0psf; BCDL=6.0psf; h=25ft; Cat. II; Exp B; Enclosed; MWFRS (envelope) gable end zone and C-C Exterior(2) 0-1-12 to 3-1-12, Interior(1) 3-1-12 to 8-3-0, Exterior(2) 8-3-0 to 12-5-15, Interior(1) 12-5-15 to 36-5-4 zone;C-C for members and forces & MWFRS for reactions shown; Lumber DOL=1.60 plate grip DOL=1.60
3) TCLL: ASCE 7-10; Pr=20.0 psf (roof live load: Lumber DOL=1.15 Plate DOL=1.15); Pg=15.0 psf (ground snow); Pf=16.5 psf (flat roof snow: Lumber DOL=1.15 Plate DOL=1.15); Category II; Exp B; Partially Exp.; Ct=1.10, Lu=50-0-0; Min. flat roof snow load governs. Rain surcharge applied to all exposed surfaces with slopes less than 0.500/12 in accordance with IBC 1608.3.4.
4) Unbalanced snow loads have been considered for this design.
5) Provide adequate drainage to prevent water ponding.
6) This truss has been designed for a 10.0 psf bottom chord live load nonconcurrent with any other live loads.
7) * This truss has been designed for a live load of 20.0psf on the bottom chord in all areas where a rectangle 3-6-0 tall by 2-0-0 wide will fit between the bottom chord and any other members.
8) Refer to girder(s) for truss to truss connections.
9) Provide mechanical connection (by others) of truss to bearing plate capable of withstanding 100 lb uplift at joint(s) except (jt=lb) 9=129, 10=211.
10) One RT7A USP connectors recommended to connect truss to bearing walls due to UPLIFT at jt(s) 1. This connection is for uplift only and does not consider lateral forces.
11) Graphical purlin representation does not depict the size or the orientation of the purlin along the top and/or bottom chord.

February 22,2021

WARNING - Verify design parameters and READ NOTES ON THIS AND INCLUDED MITEK REFERENCE PAGE MII-7473 rev. 5/19/2020 BEFORE USE.
Design valid for use only with MiTek® connectors. This design is based only upon parameters shown, and is for an individual building component, not a truss system. Before use, the building designer must verify the applicability of design parameters and properly incorporate this design into the overall building design. Bracing indicated is to prevent buckling of individual truss web and/or chord members only. Additional temporary and permanent bracing is always required for stability and to prevent collapse with possible personal injury and property damage. For general guidance regarding the fabrication, storage, delivery, erection and bracing of trusses and truss systems, see **ANSI/TPI1 Quality Criteria, DSB-89 and BCSI Building Component Safety Information** available from Truss Plate Institute, 2670 Crain Highway, Suite 203 Waldorf, MD 20601

ENGINEERING BY TRENCO A MiTek Affiliate
818 Soundside Road
Edenton, NC 27932

Job	Truss	Truss Type	Qty	Ply	KB Home 150.1910 C2
150_1910_C2	HG1	Half Hip Girder	1	2	I44899802 Job Reference (optional)

84 Components (Dunn), Dunn, NC - 28334, 8.430 s Feb 12 2021 MiTek Industries, Inc. Mon Feb 22 09:04:27 2021 Page 1
ID:VMD62rz1yiHD_OqRtbnrlFztQ8K-WbaN9KglxpuPaj4Dgc1m5sZaB1_vpyC49ZQEW2zids2

-0-10-8	5-7-0	11-6-8	17-7-12	23-9-0	29-10-4	35-11-8	42-2-8
0-10-8	5-7-0	5-11-8	6-1-4	6-1-4	6-1-4	6-1-4	6-3-0

Scale = 1:73.6

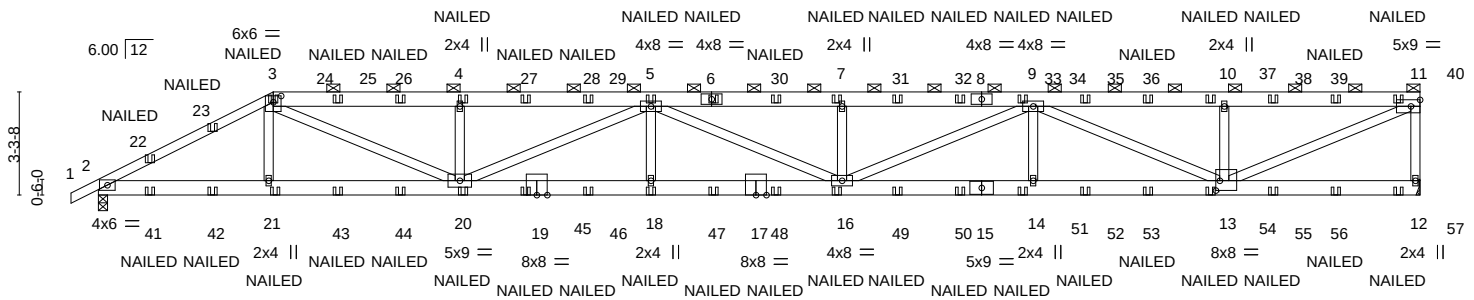

5-7-0	11-6-8	17-7-12	23-9-0	29-10-4	35-11-8	42-2-8
5-7-0	5-11-8	6-1-4	6-1-4	6-1-4	6-1-4	6-3-0

Plate Offsets (X,Y)-- [3:0-3-0,0-2-7], [13:0-1-8,0-3-12]

LOADING (psf)		**SPACING-**	2-0-0	**CSI.**		**DEFL.**	in	(loc)	l/defl	L/d	**PLATES**	**GRIP**
TCLL (roof)	20.0	Plate Grip DOL	1.15	TC	0.40	Vert(LL)	0.41	16-18	>999	240	MT20	197/144
Snow (Pf/Pg)	16.5/15.0	Lumber DOL	1.15	BC	0.87	Vert(CT)	-0.74	16-18	>682	180		
TCDL	10.0	Rep Stress Incr	NO	WB	0.60	Horz(CT)	0.13	12	n/a	n/a		
BCLL	0.0 *	Code	IRC2015/TPI2014	Matrix-S							Weight: 552 lb	FT = 20%
BCDL	10.0											

LUMBER-
TOP CHORD 2x6 SP No.2 *Except*
1-3: 2x4 SP No.2 or 2x4 SPF No.2
BOT CHORD 2x6 SP No.2
WEBS 2x4 SP No.3 *Except*
3-20,5-20,5-16,9-16,9-13,11-13: 2x4 SP No.2 or 2x4 SPF No.2

BRACING-
TOP CHORD Structural wood sheathing directly applied or 5-5-9 oc purlins, except end verticals, and 2-0-0 oc purlins (5-0-12 max.): 3-11.
BOT CHORD Rigid ceiling directly applied or 10-0-0 oc bracing.

REACTIONS. (size) 12=Mechanical, 2=0-3-8
Max Horz 2=103(LC 53)
Max Uplift 12=-647(LC 9), 2=-528(LC 9)
Max Grav 12=2437(LC 2), 2=2454(LC 2)

FORCES. (lb) - Max. Comp./Max. Ten. - All forces 250 (lb) or less except when shown.
TOP CHORD 2-3=-4663/1111, 3-4=-7087/1843, 4-5=-7085/1842, 5-7=-8786/2311, 7-9=-8786/2311, 9-10=-4505/1188, 10-11=-4505/1188, 11-12=-2325/688
BOT CHORD 2-21=-1001/4048, 20-21=-1005/4034, 18-20=-2274/8684, 16-18=-2274/8684, 14-16=-1950/7390, 13-14=-1950/7390
WEBS 3-21=0/393, 3-20=-943/3419, 4-20=-573/321, 5-20=-1775/482, 5-18=0/353, 7-16=-519/296, 9-16=-397/1539, 9-14=0/350, 9-13=-3181/840, 10-13=-551/319, 11-13=-1290/4892

NOTES-
1) 2-ply truss to be connected together with 10d (0.131"x3") nails as follows:
Top chords connected as follows: 2x4 - 1 row at 0-9-0 oc, 2x6 - 2 rows staggered at 0-9-0 oc.
Bottom chords connected as follows: 2x6 - 2 rows staggered at 0-9-0 oc.
Webs connected as follows: 2x4 - 1 row at 0-9-0 oc.
2) All loads are considered equally applied to all plies, except if noted as front (F) or back (B) face in the LOAD CASE(S) section. Ply to ply connections have been provided to distribute only loads noted as (F) or (B), unless otherwise indicated.
3) Unbalanced roof live loads have been considered for this design.
4) Wind: ASCE 7-10; Vult=120mph Vasd=95mph; TCDL=6.0psf; BCDL=6.0psf; h=25ft; Cat. II; Exp B; Enclosed; MWFRS (envelope) gable end zone; Lumber DOL=1.60 plate grip DOL=1.60
5) TCLL: ASCE 7-10; Pr=20.0 psf (roof live load: Lumber DOL=1.15 Plate DOL=1.15); Pg=15.0 psf (ground snow); Pf=16.5 psf (flat roof snow: Lumber DOL=1.15 Plate DOL=1.15); Category II; Exp B; Partially Exp.; Ct=1.10, Lu=50-0-0; Min. flat roof snow load governs. Rain surcharge applied to all exposed surfaces with slopes less than 0.500/12 in accordance with IBC 1608.3.4.
6) Unbalanced snow loads have been considered for this design.
7) This truss has been designed for greater of min roof live load of 12.0 psf or 1.00 times flat roof load of 11.6 psf on overhangs non-concurrent with other live loads.
8) Provide adequate drainage to prevent water ponding.
9) This truss has been designed for a 10.0 psf bottom chord live load nonconcurrent with any other live loads.
10) * This truss has been designed for a live load of 20.0psf on the bottom chord in all areas where a rectangle 3-6-0 tall by 2-0-0 wide will fit between the bottom chord and any other members.
11) Refer to girder(s) for truss to truss connections.

February 22,2021

Continued on page 2

WARNING - Verify design parameters and READ NOTES ON THIS AND INCLUDED MITEK REFERENCE PAGE MII-7473 rev. 5/19/2020 BEFORE USE.
Design valid for use only with MiTek® connectors. This design is based only upon parameters shown, and is for an individual building component, not a truss system. Before use, the building designer must verify the applicability of design parameters and properly incorporate this design into the overall building design. Bracing indicated is to prevent buckling of individual truss web and/or chord members only. Additional temporary and permanent bracing is always required for stability and to prevent collapse with possible personal injury and property damage. For general guidance regarding the fabrication, storage, delivery, erection and bracing of trusses and truss systems, see **ANSI/TPI1 Quality Criteria, DSB-89 and BCSI Building Component Safety Information** available from Truss Plate Institute, 2670 Crain Highway, Suite 203 Waldorf, MD 20601

ENGINEERING BY TRENCO
A MiTek Affiliate
818 Soundside Road
Edenton, NC 27932

NOTES-

12) Provide mechanical connection (by others) of truss to bearing plate capable of withstanding 100 lb uplift at joint(s) except (jt=lb) 12=647.
13) One H2.5A Simpson Strong-Tie connectors recommended to connect truss to bearing walls due to UPLIFT at jt(s) 2. This connection is for uplift only and does not consider lateral forces.
14) Graphical purlin representation does not depict the size or the orientation of the purlin along the top and/or bottom chord.
15) "NAILED" indicates 3-10d (0.148"x3") or 3-12d (0.148"x3.25") toe-nails per NDS guidlines.

LOAD CASE(S) Standard

1) Dead + Snow (balanced): Lumber Increase=1.15, Plate Increase=1.15
   Uniform Loads (plf)
   Vert: 1-3=-43, 3-11=-53, 2-12=-20
   Concentrated Loads (lb)
   Vert: 3=-31(B) 6=-26(B) 21=-19(B) 20=-19(B) 4=-26(B) 5=-26(B) 18=-19(B) 7=-26(B) 16=-19(B) 22=-33(B) 23=-1(B) 25=-26(B) 26=-26(B) 27=-26(B) 28=-26(B) 30=-26(B) 31=-26(B) 32=-26(B) 33=-26(B) 35=-26(B) 36=-26(B) 37=-26(B) 38=-26(B) 39=-26(B) 40=-38(B) 41=-31(B) 42=-72(B) 43=-19(B) 44=-19(B) 45=-19(B) 46=-19(B) 47=-19(B) 48=-19(B) 49=-19(B) 50=-19(B) 51=-19(B) 52=-19(B) 53=-19(B) 54=-19(B) 55=-19(B) 56=-19(B) 57=-23(B)

WARNING - Verify design parameters and READ NOTES ON THIS AND INCLUDED MITEK REFERENCE PAGE MII-7473 rev. 5/19/2020 BEFORE USE.
Design valid for use only with MiTek® connectors. This design is based only upon parameters shown, and is for an individual building component, not a truss system. Before use, the building designer must verify the applicability of design parameters and properly incorporate this design into the overall building design. Bracing indicated is to prevent buckling of individual truss web and/or chord members only. Additional temporary and permanent bracing is always required for stability and to prevent collapse with possible personal injury and property damage. For general guidance regarding the fabrication, storage, delivery, erection and bracing of trusses and truss systems, see **ANSI/TPI1 Quality Criteria, DSB-89 and BCSI Building Component Safety Information** available from Truss Plate Institute, 2670 Crain Highway, Suite 203 Waldorf, MD 20601

ENGINEERING BY TRENCO A MiTek Affiliate
818 Soundside Road
Edenton, NC 27932

Job	Truss	Truss Type	Qty	Ply	KB Home 150.1910 C2
150_1910_C2	HG10	HALF HIP GIRDER	1	1	I44899803 Job Reference (optional)

84 Components (Dunn), Dunn, NC - 28334, 8.430 s Feb 12 2021 MiTek Industries, Inc. Mon Feb 22 09:04:32 2021 Page 1
ID:VMD62rz1yiHD_OqRtbnrIFztQ8K-tYOGC1ktlLXhhUyAT9dxowGKv2mnUBCqIq8?AFzidrz

5-7-0	11-2-0	16-7-4	22-0-8	27-5-12	31-11-8	36-7-0
5-7-0	5-7-0	5-5-4	5-5-4	5-5-4	4-5-12	4-7-8

Scale = 1:62.2

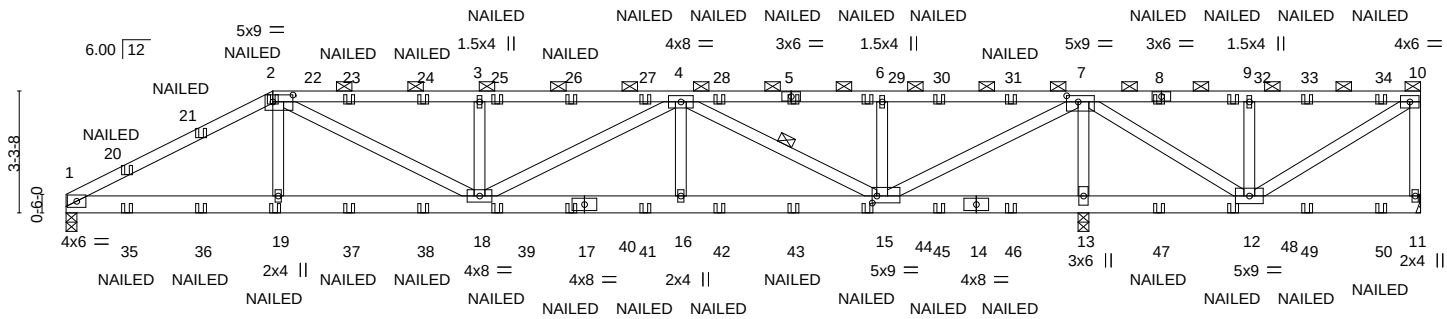

5-7-0	11-2-0	16-7-4	22-0-8	27-5-12	31-11-8	36-7-0
5-7-0	5-7-0	5-5-4	5-5-4	5-5-4	4-5-12	4-7-8

Plate Offsets (X,Y)-- [2:0-6-8,0-2-4], [7:0-3-12,0-2-0], [15:0-1-8,0-2-4]

LOADING (psf)		**SPACING-**	2-0-0	**CSI.**		**DEFL.**	in	(loc)	l/defl	L/d	**PLATES**	**GRIP**
TCLL (roof)	20.0	Plate Grip DOL	1.15	TC	0.85	Vert(LL)	0.16	16-18	>999	240	MT20	197/144
Snow (Pf/Pg)	16.5/15.0	Lumber DOL	1.15	BC	0.57	Vert(CT)	-0.29	16-18	>999	180		
TCDL	10.0	Rep Stress Incr	NO	WB	0.74	Horz(CT)	0.04	13	n/a	n/a		
BCLL	0.0 *	Code	IRC2015/TPI2014	Matrix-S							Weight: 216 lb	FT = 20%
BCDL	10.0											

LUMBER-

TOP CHORD 2x4 SP No.2 *Except*
1-2: 2x4 SP No.2 or 2x4 SPF No.2
BOT CHORD 2x6 SP No.2
WEBS 2x4 SP No.3 *Except*
2-18,4-18,4-15,7-15: 2x4 SP No.2 or 2x4 SPF No.2

BRACING-

TOP CHORD Structural wood sheathing directly applied or 2-10-15 oc purlins, except end verticals, and 2-0-0 oc purlins (2-8-8 max.): 2-10.
BOT CHORD Rigid ceiling directly applied or 4-11-8 oc bracing.
WEBS 1 Row at midpt 4-15

REACTIONS. (size) 1=0-3-8, 11=Mechanical, 13=0-3-8 (req. 0-4-11)
Max Horz 1=96(LC 48)
Max Uplift 1=-246(LC 9), 11=-180(LC 2), 13=-796(LC 9)
Max Grav 1=1326(LC 2), 11=40(LC 9), 13=2993(LC 2)

SUPPLEMENTARY BEARING PLATES, SPECIAL ANCHORAGE, OR OTHER MEANS TO ALLOW FOR THE MINIMUM REQUIRED SUPPORT WIDTH (SUCH AS COLUMN CAPS, BEARING BLOCKS, ETC.) ARE THE RESPONSIBILITY OF THE TRUSS MANUFACTURER OR THE BUILDING DESIGNER.

FORCES. (lb) - Max. Comp./Max. Ten. - All forces 250 (lb) or less except when shown.
TOP CHORD 1-2=-2355/516, 2-3=-2741/705, 3-4=-2740/705, 4-6=-690/190, 6-7=-690/190, 7-9=-157/630, 9-10=-157/630, 10-11=-13/262
BOT CHORD 1-19=-477/2004, 18-19=-473/2018, 16-18=-606/2319, 15-16=-606/2319, 13-15=-1982/504, 12-13=-1982/504
WEBS 2-19=0/392, 2-18=-278/838, 3-18=-496/284, 4-18=-112/514, 4-16=0/338, 4-15=-1849/473, 6-15=-464/267, 7-15=-787/3032, 7-13=-2754/839, 7-12=-414/1614, 9-12=-391/225, 10-12=-778/200

NOTES-

1) Wind: ASCE 7-10; Vult=120mph Vasd=95mph; TCDL=6.0psf; BCDL=6.0psf; h=25ft; Cat. II; Exp B; Enclosed; MWFRS (envelope) gable end zone; Lumber DOL=1.60 plate grip DOL=1.60
2) TCLL: ASCE 7-10; Pr=20.0 psf (roof live load: Lumber DOL=1.15 Plate DOL=1.15); Pg=15.0 psf (ground snow); Pf=16.5 psf (flat roof snow: Lumber DOL=1.15 Plate DOL=1.15); Category II; Exp B; Partially Exp.; Ct=1.10, Lu=50-0-0; Min. flat roof snow load governs. Rain surcharge applied to all exposed surfaces with slopes less than 0.500/12 in accordance with IBC 1608.3.4.
3) Unbalanced snow loads have been considered for this design.
4) Provide adequate drainage to prevent water ponding.
5) This truss has been designed for a 10.0 psf bottom chord live load nonconcurrent with any other live loads.
6) * This truss has been designed for a live load of 20.0psf on the bottom chord in all areas where a rectangle 3-6-0 tall by 2-0-0 wide will fit between the bottom chord and any other members.
7) WARNING: Required bearing size at joint(s) 13 greater than input bearing size.
8) Refer to girder(s) for truss to truss connections.
9) Provide mechanical connection (by others) of truss to bearing plate capable of withstanding 100 lb uplift at joint(s) except (jt=lb) 11=180, 13=796.
10) One H2.5A Simpson Strong-Tie connectors recommended to connect truss to bearing walls due to UPLIFT at jt(s) 1. This connection is for uplift only and does not consider lateral forces.
11) Graphical purlin representation does not depict the size or the orientation of the purlin along the top and/or bottom chord.
12) "NAILED" indicates 3-10d (0.148"x3") or 3-12d (0.148"x3.25") toe-nails per NDS guidlines.
13) Hanger(s) or other connection device(s) shall be provided sufficient to support concentrated load(s) 95 lb down and 86 lb up at 27-6-14 on top chord. The design/selection of such connection device(s) is the responsibility of others.

Continued on page 2

February 22,2021

WARNING - Verify design parameters and READ NOTES ON THIS AND INCLUDED MITEK REFERENCE PAGE MII-7473 rev. 5/19/2020 BEFORE USE.
Design valid for use only with MiTek® connectors. This design is based only upon parameters shown, and is for an individual building component, not a truss system. Before use, the building designer must verify the applicability of design parameters and properly incorporate this design into the overall building design. Bracing indicated is to prevent buckling of individual truss web and/or chord members only. Additional temporary and permanent bracing is always required for stability and to prevent collapse with possible personal injury and property damage. For general guidance regarding the fabrication, storage, delivery, erection and bracing of trusses and truss systems, see **ANSI/TPI1 Quality Criteria, DSB-89 and BCSI Building Component Safety Information** available from Truss Plate Institute, 2670 Crain Highway, Suite 203 Waldorf, MD 20601

ENGINEERING BY TRENCO A MiTek Affiliate
818 Soundside Road
Edenton, NC 27932

NOTES-

14) In the LOAD CASE(S) section, loads applied to the face of the truss are noted as front (F) or back (B).

LOAD CASE(S) Standard

1) Dead + Snow (balanced): Lumber Increase=1.15, Plate Increase=1.15
   Uniform Loads (plf)
   Vert: 1-2=-43, 2-10=-53, 1-11=-20
   Concentrated Loads (lb)
   Vert: 2=-31(F) 5=-26(F) 19=-19(F) 7=-26(F) 8=-26(F) 20=-33(F) 21=-1(F) 23=-26(F) 24=-26(F) 25=-26(F) 26=-26(F) 27=-26(F) 28=-26(F) 29=-26(F) 30=-26(F) 31=-26(F) 32=-26(F) 33=-26(F) 34=-28(F) 35=-31(F) 36=-72(F) 37=-19(F) 38=-19(F) 39=-19(F) 40=-19(F) 41=-19(F) 42=-19(F) 43=-19(F) 44=-19(F) 45=-19(F) 46=-19(F) 47=-19(F) 48=-19(F) 49=-19(F) 50=-20(F)

WARNING - Verify design parameters and READ NOTES ON THIS AND INCLUDED MITEK REFERENCE PAGE MII-7473 rev. 5/19/2020 BEFORE USE.
Design valid for use only with MiTek® connectors. This design is based only upon parameters shown, and is for an individual building component, not a truss system. Before use, the building designer must verify the applicability of design parameters and properly incorporate this design into the overall building design. Bracing indicated is to prevent buckling of individual truss web and/or chord members only. Additional temporary and permanent bracing is always required for stability and to prevent collapse with possible personal injury and property damage. For general guidance regarding the fabrication, storage, delivery, erection and bracing of trusses and truss systems, see **ANSI/TPI1 Quality Criteria, DSB-89 and BCSI Building Component Safety Information** available from Truss Plate Institute, 2670 Crain Highway, Suite 203 Waldorf, MD 20601

ENGINEERING BY TRENCO A MiTek Affiliate
818 Soundside Road
Edenton, NC 27932

Job	Truss	Truss Type	Qty	Ply	KB Home 150.1910 C2
150_1910_C2	J1	Jack-Open	35	1	I44899804 Job Reference (optional)

84 Components (Dunn), Dunn, NC - 28334, 8.430 s Feb 12 2021 MiTek Industries, Inc. Mon Feb 22 09:04:33 2021 Page 1
ID:VMD62rz1yiHD_OqRtbnrlFztQ8K-LlyfPNlWWffYIeXM1t8AK7penSC8Dp3zXUtZihzidry

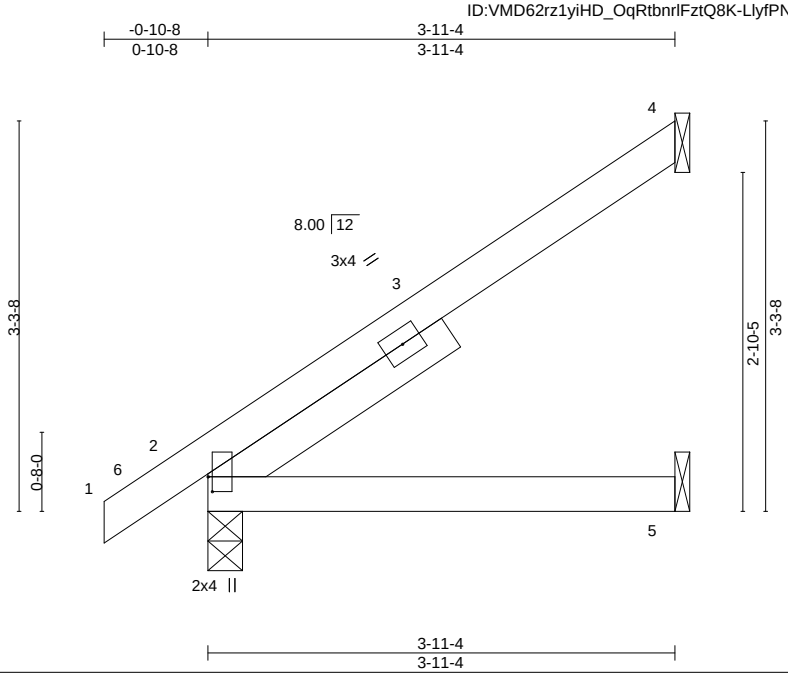

Plate Offsets (X,Y)-- [2:0-1-8,0-0-7]

LOADING (psf)		SPACING-	2-0-0	CSI.		DEFL.	in	(loc)	l/defl	L/d	PLATES	GRIP
TCLL (roof)	20.0	Plate Grip DOL	1.15	TC	0.26	Vert(LL)	-0.01	2-5	>999	240	MT20	197/144
Snow (Pf/Pg)	11.6/15.0	Lumber DOL	1.15	BC	0.18	Vert(CT)	-0.03	2-5	>999	180		
TCDL	10.0	Rep Stress Incr	YES	WB	0.00	Horz(CT)	-0.01	4	n/a	n/a		
BCLL	0.0 *	Code IRC2015/TPI2014		Matrix-P							Weight: 18 lb	FT = 20%
BCDL	10.0											

LUMBER-
TOP CHORD 2x4 SP No.2 or 2x4 SPF No.2
BOT CHORD 2x4 SP No.2 or 2x4 SPF No.2
SLIDER Left 2x4 SP No.3 -t 2-4-9

BRACING-
TOP CHORD Structural wood sheathing directly applied or 3-11-4 oc purlins.
BOT CHORD Rigid ceiling directly applied or 10-0-0 oc bracing.

REACTIONS. (size) 4=Mechanical, 2=0-3-8, 5=Mechanical
Max Horz 2=103(LC 14)
Max Uplift 4=-75(LC 14)
Max Grav 4=118(LC 26), 2=213(LC 2), 5=78(LC 5)

FORCES. (lb) - Max. Comp./Max. Ten. - All forces 250 (lb) or less except when shown.

NOTES-
1) Wind: ASCE 7-10; Vult=120mph Vasd=95mph; TCDL=6.0psf; BCDL=6.0psf; h=25ft; Cat. II; Exp B; Enclosed; MWFRS (envelope) gable end zone and C-C Exterior(2) -0-10-8 to 2-1-8, Interior(1) 2-1-8 to 3-10-8 zone;C-C for members and forces & MWFRS for reactions shown; Lumber DOL=1.60 plate grip DOL=1.60
2) TCLL: ASCE 7-10; Pr=20.0 psf (roof live load: Lumber DOL=1.15 Plate DOL=1.15); Pg=15.0 psf (ground snow); Pf=11.6 psf (flat roof snow: Lumber DOL=1.15 Plate DOL=1.15); Category II; Exp B; Partially Exp.; Ct=1.10
3) This truss has been designed for greater of min roof live load of 12.0 psf or 1.00 times flat roof load of 11.6 psf on overhangs non-concurrent with other live loads.
4) This truss has been designed for a 10.0 psf bottom chord live load nonconcurrent with any other live loads.
5) * This truss has been designed for a live load of 20.0psf on the bottom chord in all areas where a rectangle 3-6-0 tall by 2-0-0 wide will fit between the bottom chord and any other members.
6) Refer to girder(s) for truss to truss connections.
7) Provide mechanical connection (by others) of truss to bearing plate capable of withstanding 100 lb uplift at joint(s) 4.
8) One RT7A USP connectors recommended to connect truss to bearing walls due to UPLIFT at jt(s) 5. This connection is for uplift only and does not consider lateral forces.

February 22,2021

WARNING - Verify design parameters and READ NOTES ON THIS AND INCLUDED MITEK REFERENCE PAGE MII-7473 rev. 5/19/2020 BEFORE USE.
Design valid for use only with MiTek® connectors. This design is based only upon parameters shown, and is for an individual building component, not a truss system. Before use, the building designer must verify the applicability of design parameters and properly incorporate this design into the overall building design. Bracing indicated is to prevent buckling of individual truss web and/or chord members only. Additional temporary and permanent bracing is always required for stability and to prevent collapse with possible personal injury and property damage. For general guidance regarding the fabrication, storage, delivery, erection and bracing of trusses and truss systems, see **ANSI/TPI1 Quality Criteria, DSB-89 and BCSI Building Component Safety Information** available from Truss Plate Institute, 2670 Crain Highway, Suite 203 Waldorf, MD 20601

ENGINEERING BY TRENCO A MiTek Affiliate
818 Soundside Road
Edenton, NC 27932

Job	Truss	Truss Type	Qty	Ply	KB Home 150.1910 C2
150_1910_C2	J2	Jack-Open	2	1	I44899805 Job Reference (optional)

84 Components (Dunn), Dunn, NC - 28334, 8.430 s Feb 12 2021 MiTek Industries, Inc. Mon Feb 22 09:04:33 2021 Page 1
ID:VMD62rz1yiHD_OqRtbnrlFztQ8K-LlyfPNlWWffYIeXM1t8AK7phLSAMDpizXUtZihzidry

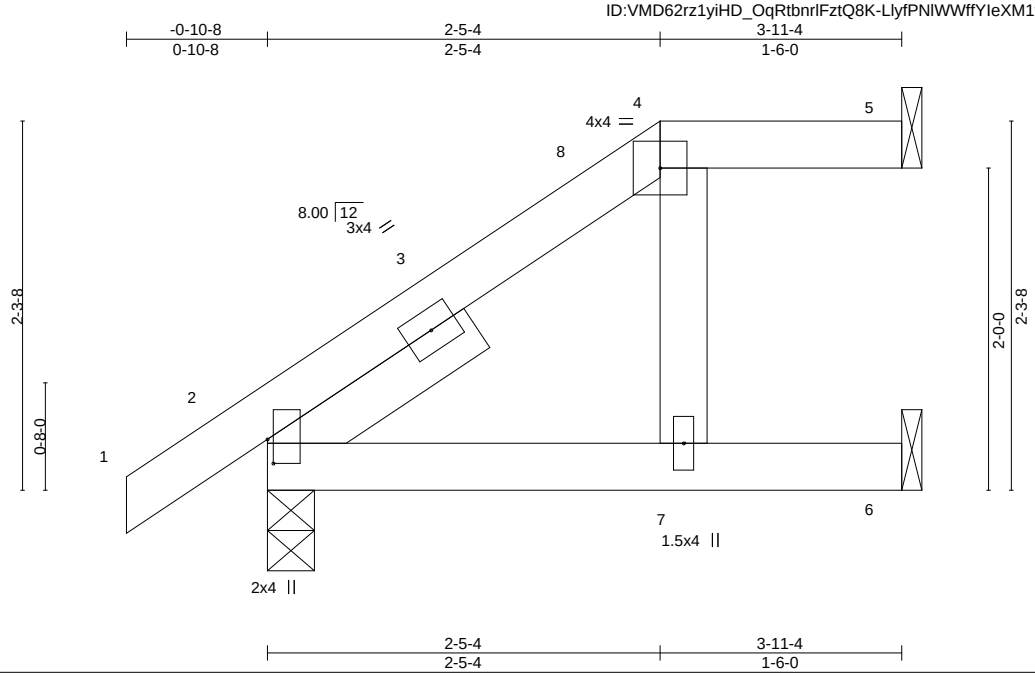

Plate Offsets (X,Y)-- [2:0-1-13,0-0-7]

LOADING (psf)		SPACING-	2-0-0	CSI.		DEFL.	in	(loc)	l/defl	L/d	PLATES	GRIP
TCLL (roof)	20.0	Plate Grip DOL	1.15	TC	0.10	Vert(LL)	-0.02	2-7	>999	240	MT20	197/144
Snow (Pf/Pg)	16.5/15.0	Lumber DOL	1.15	BC	0.29	Vert(CT)	-0.04	2-7	>999	180		
TCDL	10.0	Rep Stress Incr	YES	WB	0.02	Horz(CT)	0.03	5	n/a	n/a		
BCLL	0.0 *	Code IRC2015/TPI2014		Matrix-P							Weight: 19 lb	FT = 20%
BCDL	10.0											

LUMBER-

TOP CHORD	2x4 SP No.2 or 2x4 SPF No.2 *Except* 4-5: 2x4 SP No.3
BOT CHORD	2x4 SP No.2 or 2x4 SPF No.2
WEBS	2x4 SP No.3
SLIDER	Left 2x4 SP No.3 -t 1-5-12

BRACING-

TOP CHORD	Structural wood sheathing directly applied or 3-11-4 oc purlins, except 2-0-0 oc purlins: 4-5.
BOT CHORD	Rigid ceiling directly applied or 10-0-0 oc bracing.

REACTIONS. (size) 5=Mechanical, 2=0-3-8, 6=Mechanical
Max Horz 2=72(LC 14)
Max Uplift 5=-15(LC 10), 2=-13(LC 14), 6=-11(LC 14)
Max Grav 5=43(LC 2), 2=213(LC 2), 6=106(LC 2)

FORCES. (lb) - Max. Comp./Max. Ten. - All forces 250 (lb) or less except when shown.

NOTES-

1) Unbalanced roof live loads have been considered for this design.
2) Wind: ASCE 7-10; Vult=120mph Vasd=95mph; TCDL=6.0psf; BCDL=6.0psf; h=25ft; Cat. II; Exp B; Enclosed; MWFRS (envelope) gable end zone and C-C Exterior(2) -0-10-8 to 2-1-8, Interior(1) 2-1-8 to 2-5-4, Exterior(2) 2-5-4 to 3-10-8 zone;C-C for members and forces & MWFRS for reactions shown; Lumber DOL=1.60 plate grip DOL=1.60
3) TCLL: ASCE 7-10; Pr=20.0 psf (roof live load: Lumber DOL=1.15 Plate DOL=1.15); Pg=15.0 psf (ground snow); Pf=16.5 psf (flat roof snow: Lumber DOL=1.15 Plate DOL=1.15); Category II; Exp B; Partially Exp.; Ct=1.10, Lu=50-0-0; Min. flat roof snow load governs. Rain surcharge applied to all exposed surfaces with slopes less than 0.500/12 in accordance with IBC 1608.3.4.
4) This truss has been designed for greater of min roof live load of 12.0 psf or 1.00 times flat roof load of 11.6 psf on overhangs non-concurrent with other live loads.
5) Provide adequate drainage to prevent water ponding.
6) This truss has been designed for a 10.0 psf bottom chord live load nonconcurrent with any other live loads.
7) * This truss has been designed for a live load of 20.0psf on the bottom chord in all areas where a rectangle 3-6-0 tall by 2-0-0 wide will fit between the bottom chord and any other members.
8) Refer to girder(s) for truss to truss connections.
9) Provide mechanical connection (by others) of truss to bearing plate capable of withstanding 100 lb uplift at joint(s) 5, 6.
10) One RT7A USP connectors recommended to connect truss to bearing walls due to UPLIFT at jt(s) 2. This connection is for uplift only and does not consider lateral forces.
11) Graphical purlin representation does not depict the size or the orientation of the purlin along the top and/or bottom chord.

February 22,2021

WARNING - Verify design parameters and READ NOTES ON THIS AND INCLUDED MITEK REFERENCE PAGE MII-7473 rev. 5/19/2020 BEFORE USE.
Design valid for use only with MiTek® connectors. This design is based only upon parameters shown, and is for an individual building component, not a truss system. Before use, the building designer must verify the applicability of design parameters and properly incorporate this design into the overall building design. Bracing indicated is to prevent buckling of individual truss web and/or chord members only. Additional temporary and permanent bracing is always required for stability and to prevent collapse with possible personal injury and property damage. For general guidance regarding the fabrication, storage, delivery, erection and bracing of trusses and truss systems, see **ANSI/TPI1 Quality Criteria, DSB-89 and BCSI Building Component Safety Information** available from Truss Plate Institute, 2670 Crain Highway, Suite 203 Waldorf, MD 20601

ENGINEERING BY TRENCO A MiTek Affiliate
818 Soundside Road
Edenton, NC 27932

Job	Truss	Truss Type	Qty	Ply	KB Home 150.1910 C2
150_1910_C2	J3	Jack-Open Girder	2	1	I44899806 Job Reference (optional)

84 Components (Dunn), Dunn, NC - 28334, 8.430 s Feb 12 2021 MiTek Industries, Inc. Mon Feb 22 09:04:35 2021 Page 1
ID:VMD62rz1yiHD_OqRtbnrlFztQ8K-H73Pq3mm2GvGYyhl8IAePYu0mFvNhiYG_oMfnazidrw

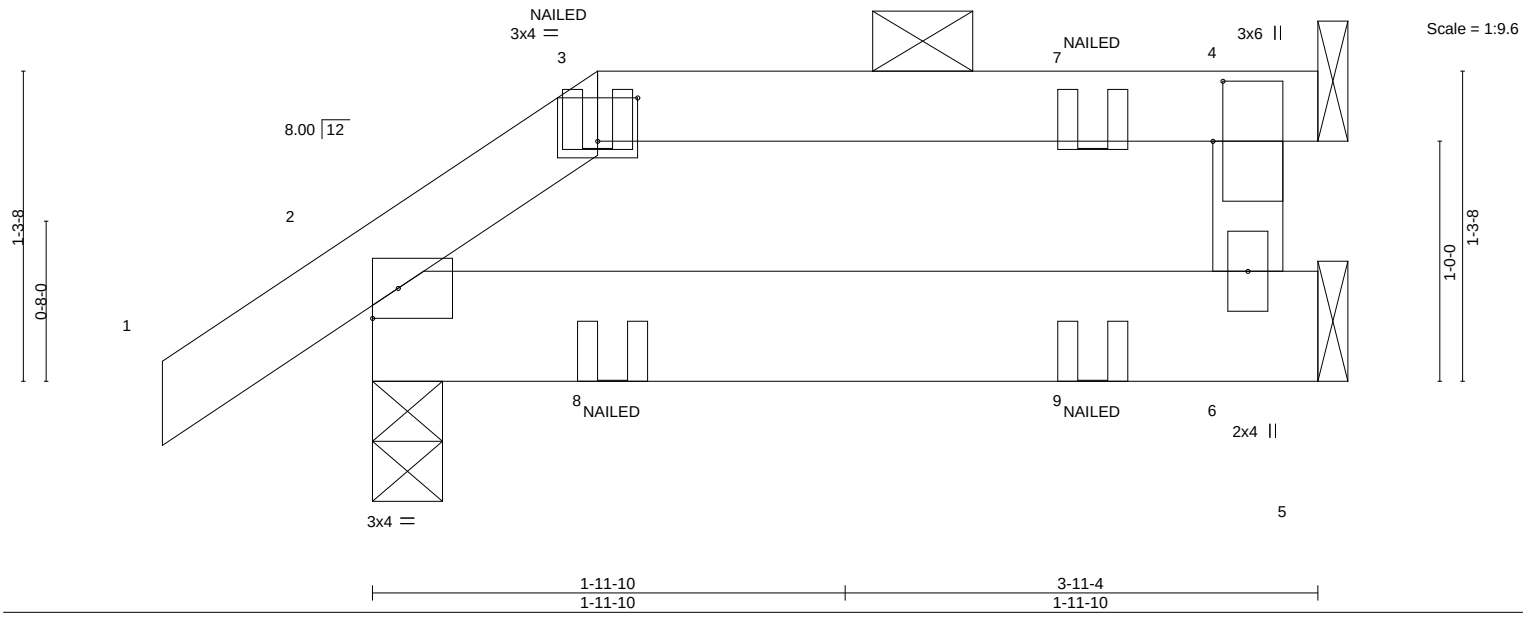

Plate Offsets (X,Y)-- [3:0-2-0,0-2-3], [4:0-3-0,0-0-8]

LOADING (psf)		**SPACING-**	2-0-0	**CSI.**		**DEFL.**	in	(loc)	l/defl	L/d	**PLATES**	**GRIP**
TCLL (roof)	20.0	Plate Grip DOL	1.15	TC	0.17	Vert(LL)	-0.00	2-6	>999	240	MT20	197/144
Snow (Pf/Pg)	16.5/15.0	Lumber DOL	1.15	BC	0.07	Vert(CT)	-0.00	2-6	>999	180		
TCDL	10.0	Rep Stress Incr	NO	WB	0.00	Horz(CT)	0.01	4	n/a	n/a		
BCLL	0.0 *	Code IRC2015/TPI2014		Matrix-P							Weight: 18 lb	FT = 20%
BCDL	10.0											

LUMBER-
TOP CHORD 2x4 SP No.2 or 2x4 SPF No.2
BOT CHORD 2x6 SP No.2
WEBS 2x4 SP No.3

BRACING-
TOP CHORD Structural wood sheathing directly applied or 3-11-4 oc purlins, except
2-0-0 oc purlins: 3-4.
BOT CHORD Rigid ceiling directly applied or 10-0-0 oc bracing.

REACTIONS. (size) 2=0-3-8, 4=Mechanical, 6=Mechanical
Max Horz 2=39(LC 10)
Max Uplift 2=-22(LC 10), 4=-36(LC 7)
Max Grav 2=210(LC 2), 4=86(LC 2), 6=83(LC 5)

FORCES. (lb) - Max. Comp./Max. Ten. - All forces 250 (lb) or less except when shown.

NOTES-
1) Unbalanced roof live loads have been considered for this design.
2) Wind: ASCE 7-10; Vult=120mph Vasd=95mph; TCDL=6.0psf; BCDL=6.0psf; h=25ft; Cat. II; Exp B; Enclosed; MWFRS (envelope) gable end zone; Lumber DOL=1.60 plate grip DOL=1.60
3) TCLL: ASCE 7-10; Pr=20.0 psf (roof live load: Lumber DOL=1.15 Plate DOL=1.15); Pg=15.0 psf (ground snow); Pf=16.5 psf (flat roof snow: Lumber DOL=1.15 Plate DOL=1.15); Category II; Exp B; Partially Exp.; Ct=1.10, Lu=50-0-0; Min. flat roof snow load governs. Rain surcharge applied to all exposed surfaces with slopes less than 0.500/12 in accordance with IBC 1608.3.4.
4) This truss has been designed for greater of min roof live load of 12.0 psf or 1.00 times flat roof load of 11.6 psf on overhangs non-concurrent with other live loads.
5) Provide adequate drainage to prevent water ponding.
6) This truss has been designed for a 10.0 psf bottom chord live load nonconcurrent with any other live loads.
7) * This truss has been designed for a live load of 20.0psf on the bottom chord in all areas where a rectangle 3-6-0 tall by 2-0-0 wide will fit between the bottom chord and any other members.
8) Refer to girder(s) for truss to truss connections.
9) Provide mechanical connection (by others) of truss to bearing plate capable of withstanding 100 lb uplift at joint(s) 4.
10) One H2.5A Simpson Strong-Tie connectors recommended to connect truss to bearing walls due to UPLIFT at jt(s) 2. This connection is for uplift only and does not consider lateral forces.
11) One MTS12 Simpson Strong-Tie connectors recommended to connect truss to bearing walls due to UPLIFT at jt(s) 6. This connection is for uplift only and does not consider lateral forces.
12) Graphical purlin representation does not depict the size or the orientation of the purlin along the top and/or bottom chord.
13) Gap between inside of top chord bearing and first diagonal or vertical web shall not exceed 0.500in.
14) "NAILED" indicates 3-10d (0.148"x3") or 3-12d (0.148"x3.25") toe-nails per NDS guidlines.
15) In the LOAD CASE(S) section, loads applied to the face of the truss are noted as front (F) or back (B).

LOAD CASE(S) Standard
1) Dead + Snow (balanced): Lumber Increase=1.15, Plate Increase=1.15
Uniform Loads (plf)
Vert: 1-3=-43, 3-4=-53, 2-5=-20

February 22,2021

WARNING - Verify design parameters and READ NOTES ON THIS AND INCLUDED MITEK REFERENCE PAGE MII-7473 rev. 5/19/2020 BEFORE USE.
Design valid for use only with MiTek® connectors. This design is based only upon parameters shown, and is for an individual building component, not a truss system. Before use, the building designer must verify the applicability of design parameters and properly incorporate this design into the overall building design. Bracing indicated is to prevent buckling of individual truss web and/or chord members only. Additional temporary and permanent bracing is always required for stability and to prevent collapse with possible personal injury and property damage. For general guidance regarding the fabrication, storage, delivery, erection and bracing of trusses and truss systems, see **ANSI/TPI1 Quality Criteria, DSB-89 and BCSI Building Component Safety Information** available from Truss Plate Institute, 2670 Crain Highway, Suite 203 Waldorf, MD 20601

ENGINEERING BY TRENCO A MiTek Affiliate
818 Soundside Road
Edenton, NC 27932

Job	Truss	Truss Type	Qty	Ply	KB Home 150.1910 C2
150_1910_C2	JA	Jack-Open	3	1	I44899807 Job Reference (optional)

84 Components (Dunn), Dunn, NC - 28334, 8.430 s Feb 12 2021 MiTek Industries, Inc. Mon Feb 22 09:04:35 2021 Page 1
ID:VMD62rz1yiHD_OqRtbnrlFztQ8K-H73Pq3mm2GvGYyhl8IAePYu2XFw1hiYG_oMfnazidrw

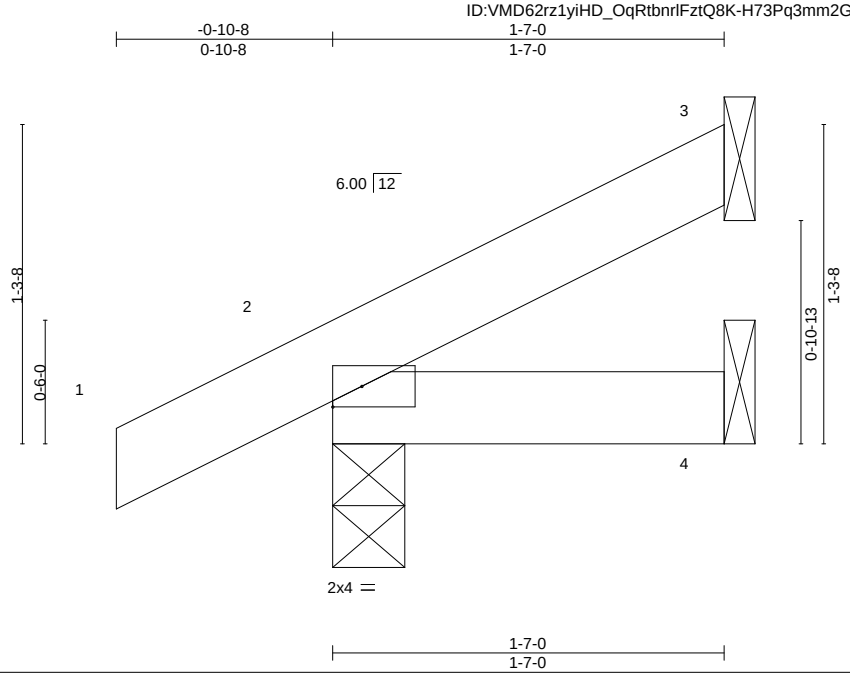

LOADING (psf)		SPACING-	2-0-0	CSI.		DEFL.	in	(loc)	l/defl	L/d	PLATES	GRIP
TCLL (roof)	20.0	Plate Grip DOL	1.15	TC	0.05	Vert(LL)	-0.00	2	>999	240	MT20	197/144
Snow (Pf/Pg)	11.6/15.0	Lumber DOL	1.15	BC	0.02	Vert(CT)	-0.00	2	>999	180		
TCDL	10.0	Rep Stress Incr	YES	WB	0.00	Horz(CT)	-0.00	3	n/a	n/a		
BCLL	0.0 *	Code IRC2015/TPI2014		Matrix-P							Weight: 7 lb	FT = 20%
BCDL	10.0											

LUMBER-
TOP CHORD 2x4 SP No.2 or 2x4 SPF No.2
BOT CHORD 2x4 SP No.2 or 2x4 SPF No.2

BRACING-
TOP CHORD Structural wood sheathing directly applied or 1-7-0 oc purlins.
BOT CHORD Rigid ceiling directly applied or 10-0-0 oc bracing.

REACTIONS. (size) 3=Mechanical, 2=0-3-8, 4=Mechanical
Max Horz 2=39(LC 16)
Max Uplift 3=-21(LC 16), 2=-16(LC 16)
Max Grav 3=30(LC 2), 2=132(LC 2), 4=31(LC 7)

FORCES. (lb) - Max. Comp./Max. Ten. - All forces 250 (lb) or less except when shown.

NOTES-
1) Wind: ASCE 7-10; Vult=120mph Vasd=95mph; TCDL=6.0psf; BCDL=6.0psf; h=25ft; Cat. II; Exp B; Enclosed; MWFRS (envelope) gable end zone and C-C Exterior(2) zone;C-C for members and forces & MWFRS for reactions shown; Lumber DOL=1.60 plate grip DOL=1.60
2) TCLL: ASCE 7-10; Pr=20.0 psf (roof live load: Lumber DOL=1.15 Plate DOL=1.15); Pg=15.0 psf (ground snow); Pf=11.6 psf (flat roof snow: Lumber DOL=1.15 Plate DOL=1.15); Category II; Exp B; Partially Exp.; Ct=1.10
3) Unbalanced snow loads have been considered for this design.
4) This truss has been designed for greater of min roof live load of 12.0 psf or 1.00 times flat roof load of 11.6 psf on overhangs non-concurrent with other live loads.
5) This truss has been designed for a 10.0 psf bottom chord live load nonconcurrent with any other live loads.
6) * This truss has been designed for a live load of 20.0psf on the bottom chord in all areas where a rectangle 3-6-0 tall by 2-0-0 wide will fit between the bottom chord and any other members.
7) Refer to girder(s) for truss to truss connections.
8) Provide mechanical connection (by others) of truss to bearing plate capable of withstanding 100 lb uplift at joint(s) 3.
9) One RT7A USP connectors recommended to connect truss to bearing walls due to UPLIFT at jt(s) 2. This connection is for uplift only and does not consider lateral forces.

February 22,2021

WARNING - Verify design parameters and READ NOTES ON THIS AND INCLUDED MITEK REFERENCE PAGE MII-7473 rev. 5/19/2020 BEFORE USE.
Design valid for use only with MiTek® connectors. This design is based only upon parameters shown, and is for an individual building component, not a truss system. Before use, the building designer must verify the applicability of design parameters and properly incorporate this design into the overall building design. Bracing indicated is to prevent buckling of individual truss web and/or chord members only. Additional temporary and permanent bracing is always required for stability and to prevent collapse with possible personal injury and property damage. For general guidance regarding the fabrication, storage, delivery, erection and bracing of trusses and truss systems, see **ANSI/TPI1 Quality Criteria, DSB-89 and BCSI Building Component Safety Information** available from Truss Plate Institute, 2670 Crain Highway, Suite 203 Waldorf, MD 20601

ENGINEERING BY TRENCO A MiTek Affiliate
818 Soundside Road
Edenton, NC 27932

Job	Truss	Truss Type	Qty	Ply	KB Home 150.1910 C2
150_1910_C2	JB	Jack-Open	1	1	I44899808 Job Reference (optional)

84 Components (Dunn), Dunn, NC - 28334, 8.430 s Feb 12 2021 MiTek Industries, Inc. Mon Feb 22 09:04:36 2021 Page 1
ID:VMD62rz1yiHD_OqRtbnrlFztQ8K-lKdn2PnOpa1796Gxi?htymRDVfGGQ9oPDS6DJ0zidrv

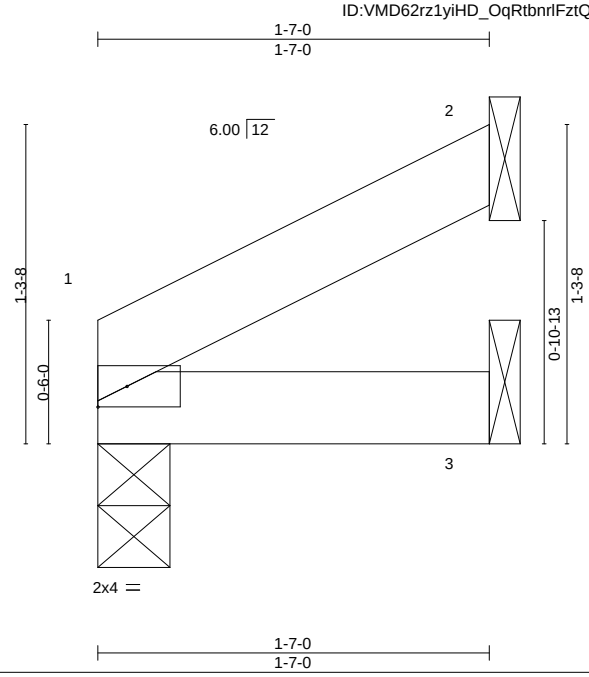

LOADING (psf)		SPACING-	2-0-0	CSI.		DEFL.	in	(loc)	l/defl	L/d	PLATES	GRIP
TCLL (roof)	20.0	Plate Grip DOL	1.15	TC	0.04	Vert(LL)	-0.00	1	>999	240	MT20	197/144
Snow (Pf/Pg)	11.6/15.0	Lumber DOL	1.15	BC	0.02	Vert(CT)	-0.00	1	>999	180		
TCDL	10.0	Rep Stress Incr	YES	WB	0.00	Horz(CT)	-0.00	2	n/a	n/a		
BCLL	0.0 *	Code IRC2015/TPI2014		Matrix-P							Weight: 5 lb	FT = 20%
BCDL	10.0											

LUMBER-
TOP CHORD 2x4 SP No.2 or 2x4 SPF No.2
BOT CHORD 2x4 SP No.2 or 2x4 SPF No.2

BRACING-
TOP CHORD Structural wood sheathing directly applied or 1-7-0 oc purlins.
BOT CHORD Rigid ceiling directly applied or 10-0-0 oc bracing.

REACTIONS. (size) 1=0-3-8, 2=Mechanical, 3=Mechanical
Max Horz 1=32(LC 16)
Max Uplift 2=-26(LC 16)
Max Grav 1=62(LC 2), 2=46(LC 2), 3=31(LC 7)

FORCES. (lb) - Max. Comp./Max. Ten. - All forces 250 (lb) or less except when shown.

NOTES-
1) Wind: ASCE 7-10; Vult=120mph Vasd=95mph; TCDL=6.0psf; BCDL=6.0psf; h=25ft; Cat. II; Exp B; Enclosed; MWFRS (envelope) gable end zone and C-C Exterior(2) zone;C-C for members and forces & MWFRS for reactions shown; Lumber DOL=1.60 plate grip DOL=1.60
2) TCLL: ASCE 7-10; Pr=20.0 psf (roof live load: Lumber DOL=1.15 Plate DOL=1.15); Pg=15.0 psf (ground snow); Pf=11.6 psf (flat roof snow: Lumber DOL=1.15 Plate DOL=1.15); Category II; Exp B; Partially Exp.; Ct=1.10
3) Unbalanced snow loads have been considered for this design.
4) This truss has been designed for a 10.0 psf bottom chord live load nonconcurrent with any other live loads.
5) * This truss has been designed for a live load of 20.0psf on the bottom chord in all areas where a rectangle 3-6-0 tall by 2-0-0 wide will fit between the bottom chord and any other members.
6) Refer to girder(s) for truss to truss connections.
7) Provide mechanical connection (by others) of truss to bearing plate capable of withstanding 100 lb uplift at joint(s) 2.

February 22,2021

WARNING - Verify design parameters and READ NOTES ON THIS AND INCLUDED MITEK REFERENCE PAGE MII-7473 rev. 5/19/2020 BEFORE USE.
Design valid for use only with MiTek® connectors. This design is based only upon parameters shown, and is for an individual building component, not a truss system. Before use, the building designer must verify the applicability of design parameters and properly incorporate this design into the overall building design. Bracing indicated is to prevent buckling of individual truss web and/or chord members only. Additional temporary and permanent bracing is always required for stability and to prevent collapse with possible personal injury and property damage. For general guidance regarding the fabrication, storage, delivery, erection and bracing of trusses and truss systems, see **ANSI/TPI1 Quality Criteria, DSB-89 and BCSI Building Component Safety Information** available from Truss Plate Institute, 2670 Crain Highway, Suite 203 Waldorf, MD 20601

ENGINEERING BY TRENCO A MiTek Affiliate
818 Soundside Road
Edenton, NC 27932

Job	Truss	Truss Type	Qty	Ply	KB Home 150.1910 C2
150_1910_C2	PB1	Piggyback	8	1	I44899809 Job Reference (optional)

84 Components (Dunn), Dunn, NC - 28334, 8.430 s Feb 12 2021 MiTek Industries, Inc. Mon Feb 22 09:04:37 2021 Page 1
ID:VMD62rz1yiHD_OqRtbnrlFztQ8K-DWB9Flo0at9_nGr8GjC6VzzK43aH9cLZS6rmrTzidru

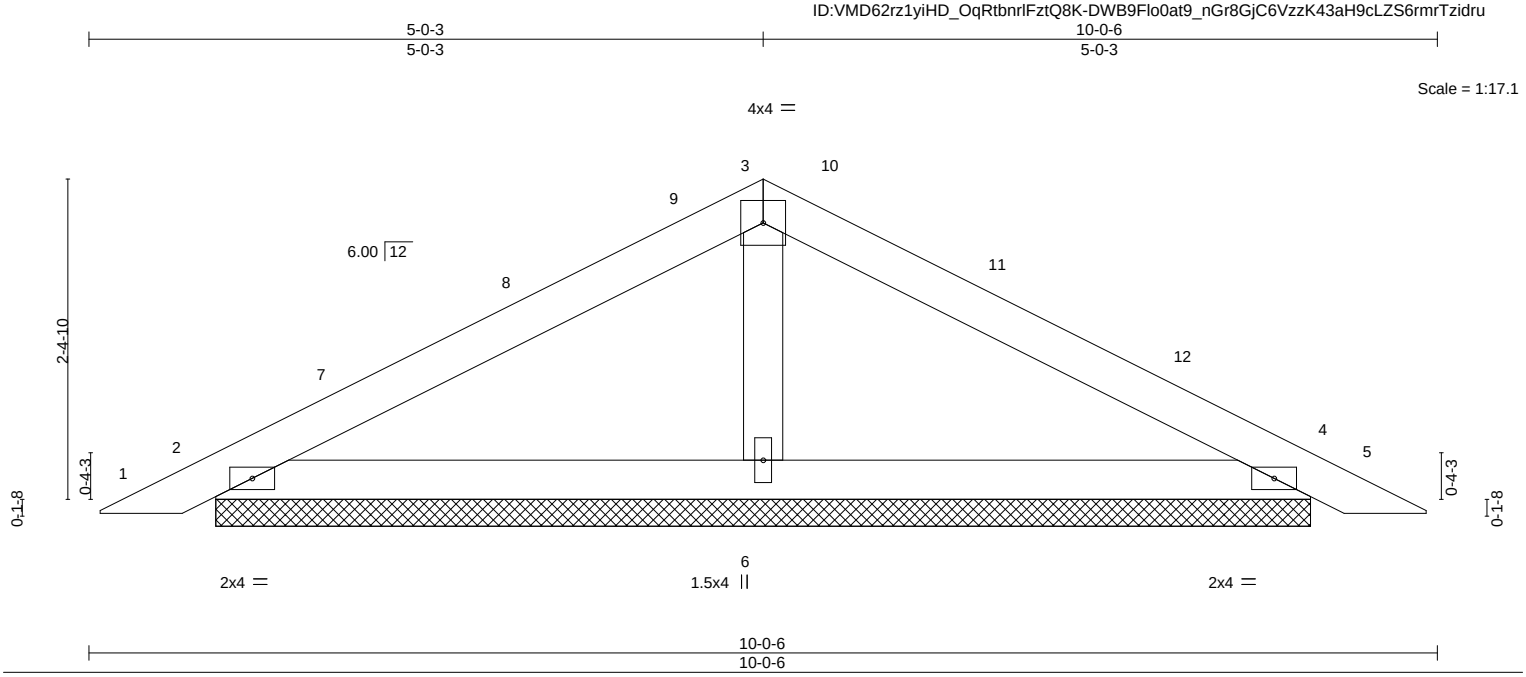

LOADING (psf)		SPACING-	2-0-0	CSI.		DEFL.	in	(loc)	l/defl	L/d	PLATES	GRIP
TCLL (roof)	20.0	Plate Grip DOL	1.15	TC	0.31	Vert(LL)	0.01	5	n/r	120	MT20	197/144
Snow (Pf/Pg)	11.6/15.0	Lumber DOL	1.15	BC	0.17	Vert(CT)	0.02	5	n/r	120		
TCDL	10.0	Rep Stress Incr	YES	WB	0.05	Horz(CT)	0.00	4	n/a	n/a		
BCLL	0.0 *	Code IRC2015/TPI2014		Matrix-P							Weight: 31 lb	FT = 20%
BCDL	10.0											

LUMBER-
TOP CHORD 2x4 SP No.2 or 2x4 SPF No.2
BOT CHORD 2x4 SP No.2 or 2x4 SPF No.2
OTHERS 2x4 SP No.3

BRACING-
TOP CHORD Structural wood sheathing directly applied or 6-0-0 oc purlins.
BOT CHORD Rigid ceiling directly applied or 10-0-0 oc bracing.

REACTIONS. (size) 2=8-1-12, 4=8-1-12, 6=8-1-12
Max Horz 2=-33(LC 17)
Max Uplift 2=-36(LC 16), 4=-42(LC 17)
Max Grav 2=201(LC 2), 4=201(LC 2), 6=317(LC 2)

FORCES. (lb) - Max. Comp./Max. Ten. - All forces 250 (lb) or less except when shown.

NOTES-
1) Unbalanced roof live loads have been considered for this design.
2) Wind: ASCE 7-10; Vult=120mph Vasd=95mph; TCDL=6.0psf; BCDL=6.0psf; h=25ft; Cat. II; Exp B; Enclosed; MWFRS (envelope) gable end zone and C-C Exterior(2) 0-4-11 to 3-4-11, Interior(1) 3-4-11 to 5-0-3, Exterior(2) 5-0-3 to 8-0-3, Interior(1) 8-0-3 to 9-7-12 zone;C-C for members and forces & MWFRS for reactions shown; Lumber DOL=1.60 plate grip DOL=1.60
3) TCLL: ASCE 7-10; Pr=20.0 psf (roof live load: Lumber DOL=1.15 Plate DOL=1.15); Pg=15.0 psf (ground snow); Pf=11.6 psf (flat roof snow: Lumber DOL=1.15 Plate DOL=1.15); Category II; Exp B; Partially Exp.; Ct=1.10
4) Unbalanced snow loads have been considered for this design.
5) This truss has been designed for greater of min roof live load of 12.0 psf or 1.00 times flat roof load of 11.6 psf on overhangs non-concurrent with other live loads.
6) Gable requires continuous bottom chord bearing.
7) This truss has been designed for a 10.0 psf bottom chord live load nonconcurrent with any other live loads.
8) * This truss has been designed for a live load of 20.0psf on the bottom chord in all areas where a rectangle 3-6-0 tall by 2-0-0 wide will fit between the bottom chord and any other members.
9) One RT7A USP connectors recommended to connect truss to bearing walls due to UPLIFT at jt(s) 2 and 4. This connection is for uplift only and does not consider lateral forces.
10) See Standard Industry Piggyback Truss Connection Detail for Connection to base truss as applicable, or consult qualified building designer.

February 22,2021

WARNING - Verify design parameters and READ NOTES ON THIS AND INCLUDED MITEK REFERENCE PAGE MII-7473 rev. 5/19/2020 BEFORE USE.
Design valid for use only with MiTek® connectors. This design is based only upon parameters shown, and is for an individual building component, not a truss system. Before use, the building designer must verify the applicability of design parameters and properly incorporate this design into the overall building design. Bracing indicated is to prevent buckling of individual truss web and/or chord members only. Additional temporary and permanent bracing is always required for stability and to prevent collapse with possible personal injury and property damage. For general guidance regarding the fabrication, storage, delivery, erection and bracing of trusses and truss systems, see **ANSI/TPI1 Quality Criteria, DSB-89 and BCSI Building Component Safety Information** available from Truss Plate Institute, 2670 Crain Highway, Suite 203 Waldorf, MD 20601

ENGINEERING BY TRENCO A MiTek Affiliate
818 Soundside Road
Edenton, NC 27932

Job	Truss	Truss Type	Qty	Ply	KB Home 150.1910 C2
150_1910_C2	PB2	Piggyback	2	1	I44899810 Job Reference (optional)

84 Components (Dunn), Dunn, NC - 28334, 8.430 s Dec 17 2020 MiTek Industries, Inc. Mon Feb 22 13:34:05 2021 Page 1
ID:VMD62rz1yiHD_OqRtbnrlFztQ8K-xCLQB5i6_mjHKExls?itqjcLPUhtMutLHXKJKLziZvG

2-7-3 | 7-5-3 | 10-0-6
2-7-3 | 4-10-0 | 2-7-3

Scale = 1:17.0

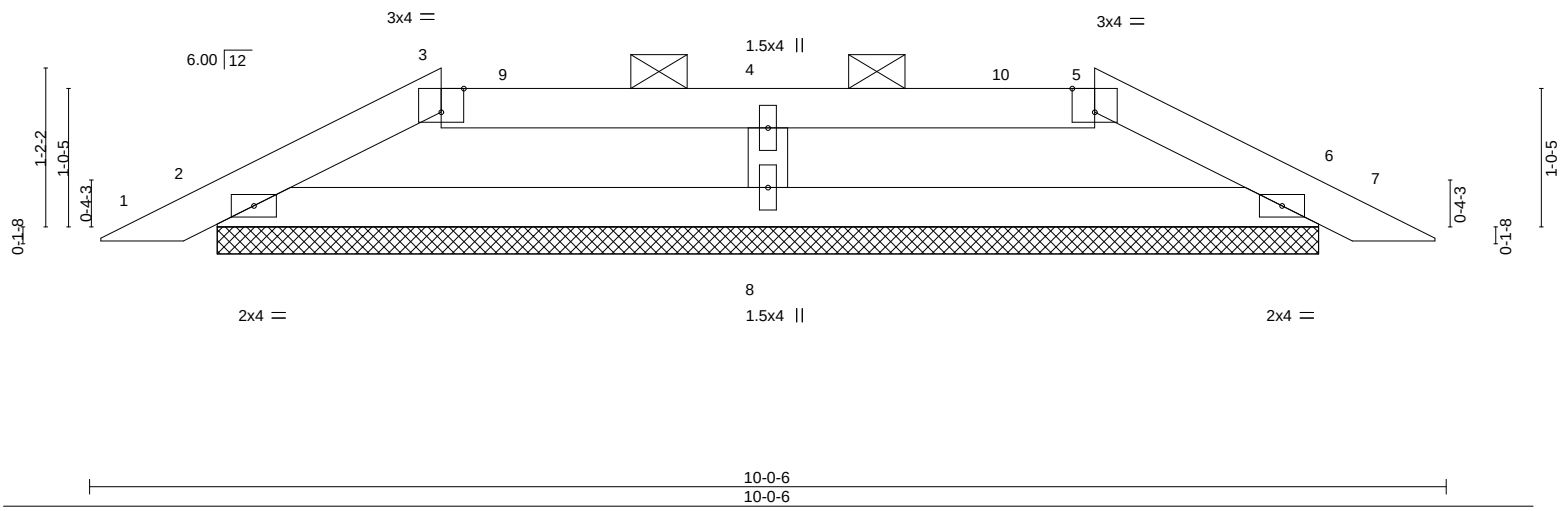

Plate Offsets (X,Y)-- [3:0-2-0,Edge], [5:0-2-0,Edge]

LOADING (psf)		SPACING-	2-0-0	CSI.		DEFL.	in	(loc)	l/defl	L/d	PLATES	GRIP
TCLL (roof)	20.0	Plate Grip DOL	1.15	TC	0.14	Vert(LL)	0.00	7	n/r	120	MT20	197/144
Snow (Pf/Pg)	16.5/15.0	Lumber DOL	1.15	BC	0.16	Vert(CT)	0.00	7	n/r	120		
TCDL	10.0	Rep Stress Incr	YES	WB	0.05	Horz(CT)	0.00	6	n/a	n/a		
BCLL	0.0 *	Code IRC2015/TPI2014		Matrix-S							Weight: 28 lb	FT = 20%
BCDL	10.0											

LUMBER-
TOP CHORD 2x4 SP No.2 or 2x4 SPF No.2
BOT CHORD 2x4 SP No.2 or 2x4 SPF No.2
WEBS 2x4 SP No.3

BRACING-
TOP CHORD Structural wood sheathing directly applied or 6-0-0 oc purlins, except 2-0-0 oc purlins (6-0-0 max.): 3-5.
BOT CHORD Rigid ceiling directly applied or 10-0-0 oc bracing.

REACTIONS. (lb/size) 2=168/8-1-12, 6=168/8-1-12, 8=274/8-1-12
Max Horz 2=-15(LC 17)
Max Uplift 2=-25(LC 16), 6=-25(LC 17), 8=-10(LC 13)
Max Grav 2=215(LC 39), 6=215(LC 39), 8=342(LC 38)

FORCES. (lb) - Max. Comp./Max. Ten. - All forces 250 (lb) or less except when shown.

NOTES-
1) Unbalanced roof live loads have been considered for this design.
2) Wind: ASCE 7-10; Vult=120mph Vasd=95mph; TCDL=6.0psf; BCDL=6.0psf; h=25ft; Cat. II; Exp B; Enclosed; MWFRS (envelope) gable end zone and C-C Exterior(2) 0-4-11 to 6-10-2, Interior(1) 6-10-2 to 7-5-3, Exterior(2) 7-5-3 to 9-7-12 zone;C-C for members and forces & MWFRS for reactions shown; Lumber DOL=1.60 plate grip DOL=1.60
3) TCLL: ASCE 7-10; Pr=20.0 psf (roof live load: Lumber DOL=1.15 Plate DOL=1.15); Pg=15.0 psf (ground snow); Pf=16.5 psf (flat roof snow: Lumber DOL=1.15 Plate DOL=1.15); Category II; Exp B; Partially Exp.; Ct=1.10, Lu=50-0-0; Min. flat roof snow load governs. Rain surcharge applied to all exposed surfaces with slopes less than 0.500/12 in accordance with IBC 1608.3.4.
4) Unbalanced snow loads have been considered for this design.
5) This truss has been designed for greater of min roof live load of 12.0 psf or 1.00 times flat roof load of 11.6 psf on overhangs non-concurrent with other live loads.
6) Provide adequate drainage to prevent water ponding.
7) Gable requires continuous bottom chord bearing.
8) This truss has been designed for a 10.0 psf bottom chord live load nonconcurrent with any other live loads.
9) * This truss has been designed for a live load of 20.0psf on the bottom chord in all areas where a rectangle 3-6-0 tall by 2-0-0 wide will fit between the bottom chord and any other members.
10) Provide mechanical connection (by others) of truss to bearing plate capable of withstanding 10 lb uplift at joint 8.
11) One RT7A USP connectors recommended to connect truss to bearing walls due to UPLIFT at jt(s) 2 and 6. This connection is for uplift only and does not consider lateral forces.
12) See Standard Industry Piggyback Truss Connection Detail for Connection to base truss as applicable, or consult qualified building designer.
13) Graphical purlin representation does not depict the size or the orientation of the purlin along the top and/or bottom chord.

LOAD CASE(S) Standard

February 22,2021

WARNING - Verify design parameters and READ NOTES ON THIS AND INCLUDED MITEK REFERENCE PAGE MII-7473 rev. 5/19/2020 BEFORE USE.
Design valid for use only with MiTek® connectors. This design is based only upon parameters shown, and is for an individual building component, not a truss system. Before use, the building designer must verify the applicability of design parameters and properly incorporate this design into the overall building design. Bracing indicated is to prevent buckling of individual truss web and/or chord members only. Additional temporary and permanent bracing is always required for stability and to prevent collapse with possible personal injury and property damage. For general guidance regarding the fabrication, storage, delivery, erection and bracing of trusses and truss systems, see **ANSI/TPI1 Quality Criteria, DSB-89 and BCSI Building Component Safety Information** available from Truss Plate Institute, 2670 Crain Highway, Suite 203 Waldorf, MD 20601

ENGINEERING BY TRENCO A MiTek Affiliate
818 Soundside Road
Edenton, NC 27932

Job	Truss	Truss Type	Qty	Ply	KB Home 150.1910 C2
150_1910_C2	T1	ROOF TRUSS	3	1	I44899811 Job Reference (optional)

84 Components (Dunn), Dunn, NC - 28334, 8.430 s Feb 12 2021 MiTek Industries, Inc. Mon Feb 22 09:04:40 2021 Page 1
ID:VMD62rz1yiHD_OqRtbnrlFztQ8K-e5tIumqvtoXZejZjxrmp6cbjZGPCMpO?844QSnzidrr

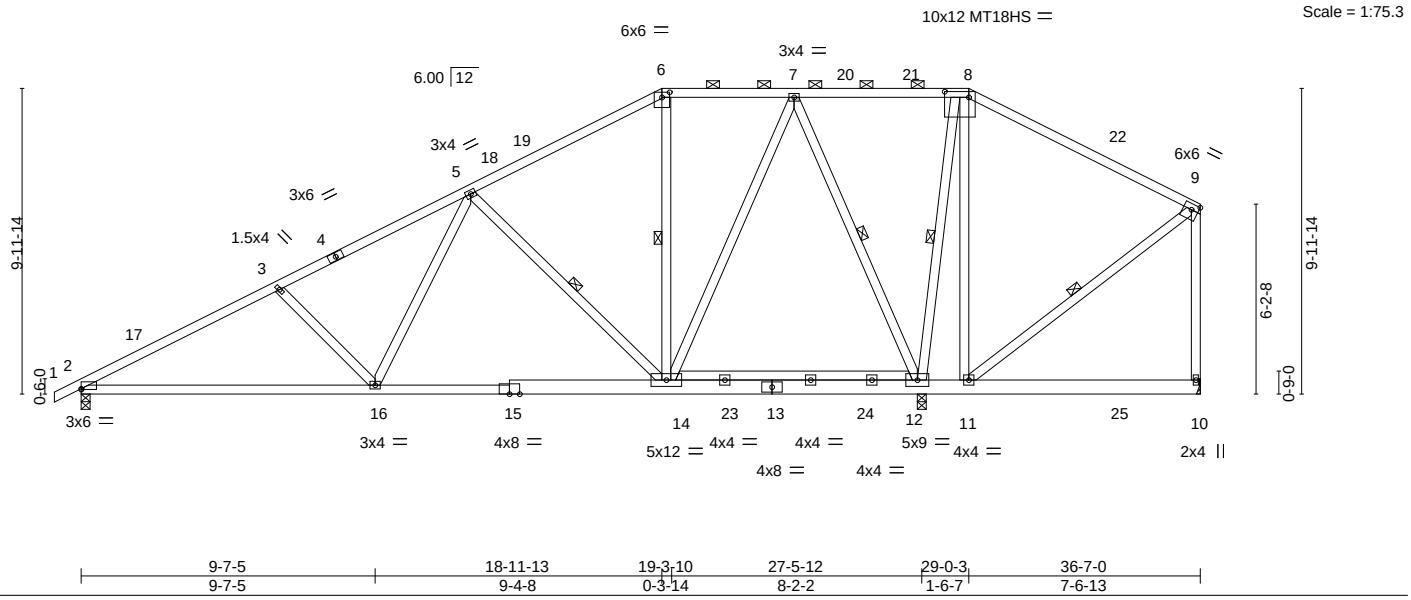

Plate Offsets (X,Y)-- [2:0-0-0,0-0-5], [6:0-3-0,0-2-0], [8:0-9-8,0-2-4], [9:Edge,0-2-4]

LOADING (psf)		**SPACING-**	2-0-0	**CSI.**		**DEFL.**	in	(loc)	l/defl	L/d	**PLATES**	**GRIP**
TCLL (roof)	20.0	Plate Grip DOL	1.15	TC	0.80	Vert(LL)	-0.21	2-16	>999	240	MT20	197/144
Snow (Pf/Pg)	16.5/15.0	Lumber DOL	1.15	BC	0.92	Vert(CT)	-0.45	2-16	>718	180	MT18HS	197/144
TCDL	10.0	Rep Stress Incr	YES	WB	0.67	Horz(CT)	0.03	12	n/a	n/a		
BCLL	0.0 *	Code IRC2015/TPI2014		Matrix-S							Weight: 269 lb	FT = 20%
BCDL	10.0											

LUMBER-

TOP CHORD 2x4 SP No.2 or 2x4 SPF No.2 *Except*
8-9: 2x4 SP No.1
BOT CHORD 2x4 SP No.2 or 2x4 SPF No.2 *Except*
10-13,13-15: 2x6 SP No.2
WEBS 2x4 SP No.3

BRACING-

TOP CHORD Structural wood sheathing directly applied or 3-10-10 oc purlins, except end verticals, and 2-0-0 oc purlins (6-0-0 max.): 6-8.
BOT CHORD Rigid ceiling directly applied or 2-2-0 oc bracing.
WEBS 1 Row at midpt 5-14, 6-14, 7-12, 8-12, 9-11

REACTIONS. (size) 2=0-3-8, 12=0-3-8, 10=Mechanical
Max Horz 2=257(LC 16)
Max Uplift 2=-55(LC 16), 12=-142(LC 16), 10=-240(LC 55)
Max Grav 2=991(LC 55), 12=2046(LC 2), 10=152(LC 38)

FORCES. (lb) - Max. Comp./Max. Ten. - All forces 250 (lb) or less except when shown.
TOP CHORD 2-3=-1516/81, 3-5=-1263/66, 5-6=-464/70, 6-7=-325/95, 7-8=-23/418, 8-9=-75/424, 9-10=-68/312
BOT CHORD 2-16=-251/1284, 14-16=-128/864, 11-12=-282/82
WEBS 3-16=-334/175, 5-16=-6/536, 5-14=-773/193, 7-14=-89/888, 7-12=-1174/139, 8-12=-784/95, 8-11=0/326, 9-11=-380/109

NOTES-

1) Unbalanced roof live loads have been considered for this design.
2) Wind: ASCE 7-10; Vult=120mph Vasd=95mph; TCDL=6.0psf; BCDL=6.0psf; h=25ft; Cat. II; Exp B; Enclosed; MWFRS (envelope) gable end zone and C-C Exterior(2) -0-10-8 to 2-1-8, Interior(1) 2-1-8 to 18-11-13, Exterior(2) 18-11-13 to 23-3-10, Interior(1) 23-3-10 to 29-0-3, Exterior(2) 29-0-3 to 33-3-2, Interior(1) 33-3-2 to 36-5-4 zone;C-C for members and forces & MWFRS for reactions shown; Lumber DOL=1.60 plate grip DOL=1.60
3) TCLL: ASCE 7-10; Pr=20.0 psf (roof live load: Lumber DOL=1.15 Plate DOL=1.15); Pg=15.0 psf (ground snow); Pf=16.5 psf (flat roof snow: Lumber DOL=1.15 Plate DOL=1.15); Category II; Exp B; Partially Exp.; Ct=1.10, Lu=50-0-0; Min. flat roof snow load governs. Rain surcharge applied to all exposed surfaces with slopes less than 0.500/12 in accordance with IBC 1608.3.4.
4) Unbalanced snow loads have been considered for this design.
5) This truss has been designed for greater of min roof live load of 12.0 psf or 1.00 times flat roof load of 11.6 psf on overhangs non-concurrent with other live loads.
6) Provide adequate drainage to prevent water ponding.
7) All plates are MT20 plates unless otherwise indicated.
8) This truss has been designed for a 10.0 psf bottom chord live load nonconcurrent with any other live loads.
9) * This truss has been designed for a live load of 20.0psf on the bottom chord in all areas where a rectangle 3-6-0 tall by 2-0-0 wide will fit between the bottom chord and any other members, with BCDL = 10.0psf.
10) Refer to girder(s) for truss to truss connections.
11) Provide mechanical connection (by others) of truss to bearing plate capable of withstanding 100 lb uplift at joint(s) except (jt=lb) 10=240.
12) One H2.5A Simpson Strong-Tie connectors recommended to connect truss to bearing walls due to UPLIFT at jt(s) 2 and 12. This connection is for uplift only and does not consider lateral forces.
13) Graphical purlin representation does not depict the size or the orientation of the purlin along the top and/or bottom chord.

Continued on page 2

February 22,2021

WARNING - Verify design parameters and READ NOTES ON THIS AND INCLUDED MITEK REFERENCE PAGE MII-7473 rev. 5/19/2020 BEFORE USE.
Design valid for use only with MiTek® connectors. This design is based only upon parameters shown, and is for an individual building component, not a truss system. Before use, the building designer must verify the applicability of design parameters and properly incorporate this design into the overall building design. Bracing indicated is to prevent buckling of individual truss web and/or chord members only. Additional temporary and permanent bracing is always required for stability and to prevent collapse with possible personal injury and property damage. For general guidance regarding the fabrication, storage, delivery, erection and bracing of trusses and truss systems, see **ANSI/TPI1 Quality Criteria, DSB-89 and BCSI Building Component Safety Information** available from Truss Plate Institute, 2670 Crain Highway, Suite 203 Waldorf, MD 20601

ENGINEERING BY TRENCO A MiTek Affiliate
818 Soundside Road
Edenton, NC 27932

NOTES-

14) ATTIC SPACE SHOWN IS DESIGNED AS UNINHABITABLE.

WARNING - Verify design parameters and READ NOTES ON THIS AND INCLUDED MITEK REFERENCE PAGE MII-7473 rev. 5/19/2020 BEFORE USE.
Design valid for use only with MiTek® connectors. This design is based only upon parameters shown, and is for an individual building component, not a truss system. Before use, the building designer must verify the applicability of design parameters and properly incorporate this design into the overall building design. Bracing indicated is to prevent buckling of individual truss web and/or chord members only. Additional temporary and permanent bracing is always required for stability and to prevent collapse with possible personal injury and property damage. For general guidance regarding the fabrication, storage, delivery, erection and bracing of trusses and truss systems, see **ANSI/TPI1 Quality Criteria, DSB-89 and BCSI Building Component Safety Information** available from Truss Plate Institute, 2670 Crain Highway, Suite 203 Waldorf, MD 20601

ENGINEERING BY TRENCO A MiTek Affiliate
818 Soundside Road
Edenton, NC 27932

Job	Truss	Truss Type	Qty	Ply	KB Home 150.1910 C2
150_1910_C2	T2A	ROOF TRUSS	3	1	I44899812 Job Reference (optional)

84 Components (Dunn), Dunn, NC - 28334, 8.430 s Feb 12 2021 MiTek Industries, Inc. Mon Feb 22 09:04:42 2021 Page 1
ID:VMD62rz1yiHD_OqRtbnrlFztQ8K-aU_2lSs9PQnGt1j52GoHC1h214AZqm0IbOZXXgzidrp

-0-10-8	6-5-13	12-8-13	18-11-13	24-0-0	29-0-3	35-7-6	42-6-0
0-10-8	6-5-13	6-3-0	6-3-0	5-0-3	5-0-3	6-7-2	6-10-10

Scale = 1:82.5

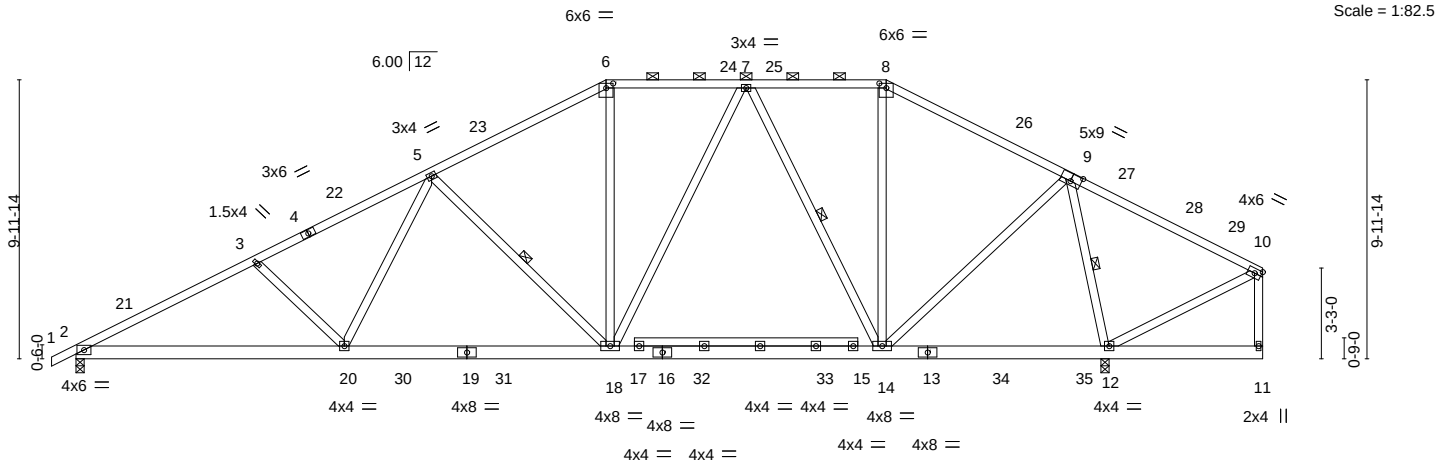

9-7-5	18-11-13	24-0-0	29-0-3	36-10-4	37-0-0	42-6-0
9-7-5	9-4-8	5-0-3	5-0-3	7-10-1	0-1-12	5-6-0

Plate Offsets (X,Y)-- [6:0-3-0,0-2-0], [8:0-3-0,0-2-0], [9:0-4-8,0-3-4]

LOADING (psf)		**SPACING-**	2-0-0	**CSI.**		**DEFL.**	in	(loc)	l/defl	L/d	**PLATES**	**GRIP**
TCLL (roof)	20.0	Plate Grip DOL	1.15	TC	0.80	Vert(LL)	-0.13	18-20	>999	240	MT20	197/144
Snow (Pf/Pg)	16.5/15.0	Lumber DOL	1.15	BC	0.61	Vert(CT)	-0.25	18-20	>999	180		
TCDL	10.0	Rep Stress Incr	YES	WB	0.47	Horz(CT)	0.05	12	n/a	n/a		
BCLL	0.0 *	Code IRC2015/TPI2014		Matrix-S							Weight: 305 lb	FT = 20%
BCDL	10.0											

LUMBER-
TOP CHORD 2x4 SP No.2 or 2x4 SPF No.2
BOT CHORD 2x6 SP No.2 *Except*
15-17: 2x4 SP No.2 or 2x4 SPF No.2
WEBS 2x4 SP No.3

BRACING-
TOP CHORD Structural wood sheathing directly applied or 3-0-7 oc purlins, except end verticals, and 2-0-0 oc purlins (4-9-4 max.): 6-8.
BOT CHORD Rigid ceiling directly applied or 10-0-0 oc bracing.
WEBS 1 Row at midpt 5-18, 7-14, 9-12

REACTIONS. (size) 2=0-3-8, 12=0-3-8
Max Horz 2=201(LC 16)
Max Uplift 2=-101(LC 16), 12=-41(LC 17)
Max Grav 2=1500(LC 2), 12=1938(LC 2)

FORCES. (lb) - Max. Comp./Max. Ten. - All forces 250 (lb) or less except when shown.
TOP CHORD 2-3=-2638/177, 3-5=-2374/170, 5-6=-1639/203, 6-7=-1402/217, 7-8=-920/192, 8-9=-1111/173, 9-10=-23/305
BOT CHORD 2-20=-279/2261, 18-20=-159/1844, 14-18=-35/1227
WEBS 3-20=-305/170, 5-20=-3/533, 5-18=-763/189, 6-18=0/441, 7-18=-49/499, 7-14=-739/101, 8-14=0/267, 9-14=-4/1019, 9-12=-1697/193

NOTES-
1) Unbalanced roof live loads have been considered for this design.
2) Wind: ASCE 7-10; Vult=120mph Vasd=95mph; TCDL=6.0psf; BCDL=6.0psf; h=25ft; Cat. II; Exp B; Enclosed; MWFRS (envelope) gable end zone and C-C Exterior(2) -0-10-8 to 2-1-8, Interior(1) 2-1-8 to 18-11-13, Exterior(2) 18-11-13 to 23-2-11, Interior(1) 23-2-11 to 29-0-3, Exterior(2) 29-0-3 to 33-3-2, Interior(1) 33-3-2 to 42-4-4 zone;C-C for members and forces & MWFRS for reactions shown; Lumber DOL=1.60 plate grip DOL=1.60
3) TCLL: ASCE 7-10; Pr=20.0 psf (roof live load: Lumber DOL=1.15 Plate DOL=1.15); Pg=15.0 psf (ground snow); Pf=16.5 psf (flat roof snow: Lumber DOL=1.15 Plate DOL=1.15); Category II; Exp B; Partially Exp.; Ct=1.10, Lu=50-0-0; Min. flat roof snow load governs. Rain surcharge applied to all exposed surfaces with slopes less than 0.500/12 in accordance with IBC 1608.3.4.
4) Unbalanced snow loads have been considered for this design.
5) This truss has been designed for greater of min roof live load of 12.0 psf or 1.00 times flat roof load of 11.6 psf on overhangs non-concurrent with other live loads.
6) Provide adequate drainage to prevent water ponding.
7) This truss has been designed for a 10.0 psf bottom chord live load nonconcurrent with any other live loads.
8) * This truss has been designed for a live load of 20.0psf on the bottom chord in all areas where a rectangle 3-6-0 tall by 2-0-0 wide will fit between the bottom chord and any other members, with BCDL = 10.0psf.
9) One H2.5A Simpson Strong-Tie connectors recommended to connect truss to bearing walls due to UPLIFT at jt(s) 2 and 12. This connection is for uplift only and does not consider lateral forces.
10) Graphical purlin representation does not depict the size or the orientation of the purlin along the top and/or bottom chord.
11) ATTIC SPACE SHOWN IS DESIGNED AS UNINHABITABLE.

February 22,2021

WARNING - Verify design parameters and READ NOTES ON THIS AND INCLUDED MITEK REFERENCE PAGE MII-7473 rev. 5/19/2020 BEFORE USE.
Design valid for use only with MiTek® connectors. This design is based only upon parameters shown, and is for an individual building component, not a truss system. Before use, the building designer must verify the applicability of design parameters and properly incorporate this design into the overall building design. Bracing indicated is to prevent buckling of individual truss web and/or chord members only. Additional temporary and permanent bracing is always required for stability and to prevent collapse with possible personal injury and property damage. For general guidance regarding the fabrication, storage, delivery, erection and bracing of trusses and truss systems, see **ANSI/TPI1 Quality Criteria, DSB-89 and BCSI Building Component Safety Information** available from Truss Plate Institute, 2670 Crain Highway, Suite 203 Waldorf, MD 20601

ENGINEERING BY TRENCO A MiTek Affiliate
818 Soundside Road
Edenton, NC 27932

Job	Truss	Truss Type	Qty	Ply	KB Home 150.1910 C2
150_1910_C2	T3A	ROOF TRUSS	2	1	I44899813 Job Reference (optional)

84 Components (Dunn), Dunn, NC - 28334, 8.430 s Feb 12 2021 MiTek Industries, Inc. Mon Feb 22 09:04:44 2021 Page 1
ID:VMD62rz1yiHD_OqRtbnrlFztQ8K-Ws6pj8tPw11_7KtUAhqlHSmPltphIaQb3i2ebZzidrn

-0-10-8	6-5-13	12-8-13	18-11-13	24-0-0	29-0-3	35-3-3	41-6-3	48-0-0	48-10-8
0-10-8	6-5-13	6-3-0	6-3-0	5-0-3	5-0-3	6-3-0	6-3-0	6-5-13	0-10-8

Scale = 1:85.1

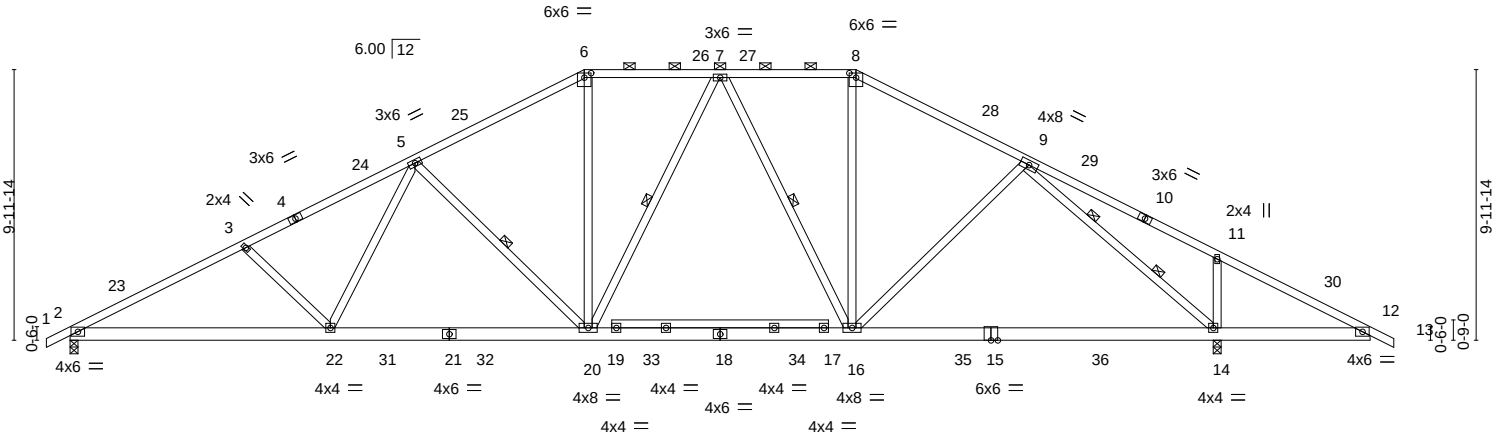

9-7-5	18-11-13	24-0-0	29-0-3	35-3-3	42-4-4	42-6-0	48-0-0
9-7-5	9-4-8	5-0-3	5-0-3	6-3-0	7-1-1	0-1-12	5-6-0

Plate Offsets (X,Y)-- [6:0-3-0,0-2-0], [8:0-3-0,0-2-0]

LOADING (psf)		**SPACING-**	2-0-0	**CSI.**		**DEFL.**	in	(loc)	l/defl	L/d	**PLATES**	**GRIP**
TCLL (roof)	20.0	Plate Grip DOL	1.15	TC	0.73	Vert(LL)	-0.22	14-16	>999	240	MT20	197/144
Snow (Pf/Pg)	16.5/15.0	Lumber DOL	1.15	BC	0.76	Vert(CT)	-0.42	14-16	>999	180		
TCDL	10.0	Rep Stress Incr	YES	WB	0.86	Horz(CT)	0.08	14	n/a	n/a		
BCLL	0.0 *	Code IRC2015/TPI2014		Matrix-S							Weight: 324 lb	FT = 20%
BCDL	10.0											

LUMBER-
TOP CHORD 2x4 SP No.2 or 2x4 SPF No.2
BOT CHORD 2x6 SP No.2 *Except*
17-19: 2x4 SP No.2 or 2x4 SPF No.2
WEBS 2x4 SP No.3

BRACING-
TOP CHORD Structural wood sheathing directly applied or 2-8-1 oc purlins, except 2-0-0 oc purlins (4-1-9 max.): 6-8.
BOT CHORD Rigid ceiling directly applied or 10-0-0 oc bracing, Except: 6-0-0 oc bracing: 12-14.
WEBS 1 Row at midpt 5-20, 7-20, 7-16
2 Rows at 1/3 pts 9-14

REACTIONS. (size) 2=0-3-8, 14=0-3-8
Max Horz 2=141(LC 16)
Max Uplift 2=-99(LC 16), 14=-102(LC 17)
Max Grav 2=1713(LC 2), 14=2230(LC 2)

FORCES. (lb) - Max. Comp./Max. Ten. - All forces 250 (lb) or less except when shown.
TOP CHORD 2-3=-3090/200, 3-5=-2856/199, 5-6=-2126/236, 6-7=-1841/237, 7-8=-1619/226, 8-9=-1882/212, 9-11=-89/492, 11-12=-185/489
BOT CHORD 2-22=-216/2660, 20-22=-97/2278, 16-20=0/1795, 14-16=-28/1400, 12-14=-355/214
WEBS 3-22=-295/170, 5-22=-1/532, 5-20=-758/188, 6-20=-8/657, 8-16=0/561, 9-16=0/401, 11-14=-408/194, 7-16=-532/110, 9-14=-2291/236

NOTES-
1) Unbalanced roof live loads have been considered for this design.
2) Wind: ASCE 7-10; Vult=120mph Vasd=95mph; TCDL=6.0psf; BCDL=6.0psf; h=25ft; Cat. II; Exp B; Enclosed; MWFRS (envelope) gable end zone and C-C Exterior(2) -0-10-8 to 2-1-8, Interior(1) 2-1-8 to 18-11-13, Exterior(2) 18-11-13 to 23-2-11, Interior(1) 23-2-11 to 29-0-3, Exterior(2) 29-0-3 to 33-3-2, Interior(1) 33-3-2 to 48-10-8 zone;C-C for members and forces & MWFRS for reactions shown; Lumber DOL=1.60 plate grip DOL=1.60
3) TCLL: ASCE 7-10; Pr=20.0 psf (roof live load: Lumber DOL=1.15 Plate DOL=1.15); Pg=15.0 psf (ground snow); Pf=16.5 psf (flat roof snow: Lumber DOL=1.15 Plate DOL=1.15); Category II; Exp B; Partially Exp.; Ct=1.10, Lu=50-0-0; Min. flat roof snow load governs. Rain surcharge applied to all exposed surfaces with slopes less than 0.500/12 in accordance with IBC 1608.3.4.
4) Unbalanced snow loads have been considered for this design.
5) This truss has been designed for greater of min roof live load of 12.0 psf or 1.00 times flat roof load of 11.6 psf on overhangs non-concurrent with other live loads.
6) Provide adequate drainage to prevent water ponding.
7) This truss has been designed for a 10.0 psf bottom chord live load nonconcurrent with any other live loads.
8) * This truss has been designed for a live load of 20.0psf on the bottom chord in all areas where a rectangle 3-6-0 tall by 2-0-0 wide will fit between the bottom chord and any other members, with BCDL = 10.0psf.
9) One H2.5A Simpson Strong-Tie connectors recommended to connect truss to bearing walls due to UPLIFT at jt(s) 2 and 14. This connection is for uplift only and does not consider lateral forces.
10) Graphical purlin representation does not depict the size or the orientation of the purlin along the top and/or bottom chord.
11) ATTIC SPACE SHOWN IS DESIGNED AS UNINHABITABLE.

February 22,2021

WARNING - Verify design parameters and READ NOTES ON THIS AND INCLUDED MITEK REFERENCE PAGE MII-7473 rev. 5/19/2020 BEFORE USE.
Design valid for use only with MiTek® connectors. This design is based only upon parameters shown, and is for an individual building component, not a truss system. Before use, the building designer must verify the applicability of design parameters and properly incorporate this design into the overall building design. Bracing indicated is to prevent buckling of individual truss web and/or chord members only. Additional temporary and permanent bracing is always required for stability and to prevent collapse with possible personal injury and property damage. For general guidance regarding the fabrication, storage, delivery, erection and bracing of trusses and truss systems, see **ANSI/TPI1 Quality Criteria, DSB-89 and BCSI Building Component Safety Information** available from Truss Plate Institute, 2670 Crain Highway, Suite 203 Waldorf, MD 20601

ENGINEERING BY TRENCO A MiTek Affiliate
818 Soundside Road
Edenton, NC 27932

Job	Truss	Truss Type	Qty	Ply	KB Home 150.1910 C2
150_1910_C2	T4	ROOF TRUSS	2	1	I44899814 Job Reference (optional)

84 Components (Dunn), Dunn, NC - 28334, 8.430 s Feb 12 2021 MiTek Industries, Inc. Mon Feb 22 09:04:46 2021 Page 1
ID:VMD62rz1yiHD_OqRtbnrlFztQ8K-SFEZ8qvgSeHiMe1sH6tDMtrlFhV9mUwtW0XlgRzidrl

-0-10-8	6-5-13	12-8-13	18-11-13	24-0-0	29-0-3	35-3-3	41-6-3	42-4-4	48-0-0	48-10-8
0-10-8	6-5-13	6-3-0	6-3-0	5-0-3	5-0-3	6-3-0	6-3-0	0-10-1	5-7-12	0-10-8

Scale = 1:83.6

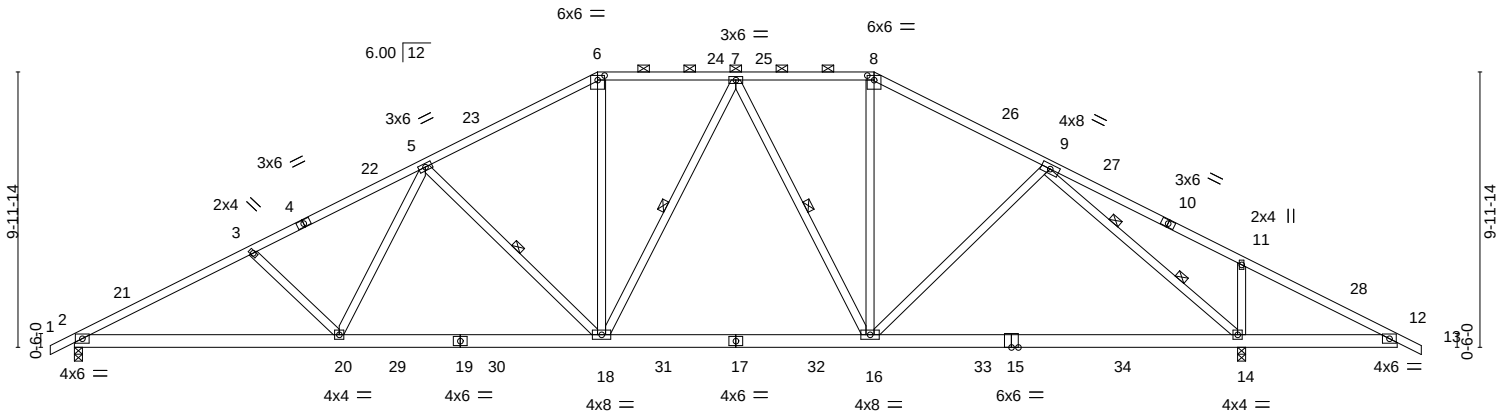

9-7-5	18-11-13	24-0-0	29-0-3	35-3-3	42-4-4	42-6-0	48-0-0
9-7-5	9-4-8	5-0-3	5-0-3	6-3-0	7-1-1	0-1-12	5-6-0

Plate Offsets (X,Y)-- [6:0-3-0,0-2-0], [8:0-3-0,0-2-0]

LOADING (psf)		**SPACING-**	2-0-0	**CSI.**		**DEFL.**	in	(loc)	l/defl	L/d	**PLATES**	**GRIP**
TCLL (roof)	20.0	Plate Grip DOL	1.15	TC	0.73	Vert(LL)	-0.22	14-16	>999	240	MT20	197/144
Snow (Pf/Pg)	16.5/15.0	Lumber DOL	1.15	BC	0.76	Vert(CT)	-0.43	14-16	>999	180		
TCDL	10.0	Rep Stress Incr	YES	WB	0.86	Horz(CT)	0.09	14	n/a	n/a		
BCLL	0.0 *	Code	IRC2015/TPI2014	Matrix-S							Weight: 312 lb	FT = 20%
BCDL	10.0											

LUMBER-
TOP CHORD 2x4 SP No.2 or 2x4 SPF No.2
BOT CHORD 2x6 SP No.2
WEBS 2x4 SP No.3

BRACING-
TOP CHORD Structural wood sheathing directly applied or 2-8-1 oc purlins, except 2-0-0 oc purlins (4-1-7 max.): 6-8.
BOT CHORD Rigid ceiling directly applied or 10-0-0 oc bracing, Except: 6-0-0 oc bracing: 12-14.
WEBS 1 Row at midpt 5-18, 7-18, 7-16
2 Rows at 1/3 pts 9-14

REACTIONS. (size) 2=0-3-8, 14=0-3-8
Max Horz 2=141(LC 20)
Max Uplift 2=-99(LC 16), 14=-102(LC 17)
Max Grav 2=1713(LC 2), 14=2230(LC 2)

FORCES. (lb) - Max. Comp./Max. Ten. - All forces 250 (lb) or less except when shown.
TOP CHORD 2-3=-3090/200, 3-5=-2859/199, 5-6=-2134/236, 6-7=-1848/236, 7-8=-1623/227, 8-9=-1886/213, 9-11=-90/491, 11-12=-186/489
BOT CHORD 2-20=-217/2660, 18-20=-97/2283, 16-18=0/1801, 14-16=-29/1402, 12-14=-355/215
WEBS 3-20=-295/170, 5-20=-1/529, 5-18=-757/188, 6-18=-8/660, 7-16=-534/109, 8-16=0/563, 9-16=0/402, 9-14=-2290/238, 11-14=-408/194

NOTES-
1) Unbalanced roof live loads have been considered for this design.
2) Wind: ASCE 7-10; Vult=120mph Vasd=95mph; TCDL=6.0psf; BCDL=6.0psf; h=25ft; Cat. II; Exp B; Enclosed; MWFRS (envelope) gable end zone and C-C Exterior(2) -0-10-8 to 2-1-8, Interior(1) 2-1-8 to 18-11-13, Exterior(2) 18-11-13 to 23-2-11, Interior(1) 23-2-11 to 29-0-3, Exterior(2) 29-0-3 to 33-3-2, Interior(1) 33-3-2 to 48-10-8 zone;C-C for members and forces & MWFRS for reactions shown; Lumber DOL=1.60 plate grip DOL=1.60
3) TCLL: ASCE 7-10; Pr=20.0 psf (roof live load: Lumber DOL=1.15 Plate DOL=1.15); Pg=15.0 psf (ground snow); Pf=16.5 psf (flat roof snow: Lumber DOL=1.15 Plate DOL=1.15); Category II; Exp B; Partially Exp.; Ct=1.10, Lu=50-0-0; Min. flat roof snow load governs. Rain surcharge applied to all exposed surfaces with slopes less than 0.500/12 in accordance with IBC 1608.3.4.
4) Unbalanced snow loads have been considered for this design.
5) This truss has been designed for greater of min roof live load of 12.0 psf or 1.00 times flat roof load of 11.6 psf on overhangs non-concurrent with other live loads.
6) Provide adequate drainage to prevent water ponding.
7) This truss has been designed for a 10.0 psf bottom chord live load nonconcurrent with any other live loads.
8) * This truss has been designed for a live load of 20.0psf on the bottom chord in all areas where a rectangle 3-6-0 tall by 2-0-0 wide will fit between the bottom chord and any other members, with BCDL = 10.0psf.
9) One H2.5A Simpson Strong-Tie connectors recommended to connect truss to bearing walls due to UPLIFT at jt(s) 2 and 14. This connection is for uplift only and does not consider lateral forces.
10) Graphical purlin representation does not depict the size or the orientation of the purlin along the top and/or bottom chord.
11) ATTIC SPACE SHOWN IS DESIGNED AS UNINHABITABLE.

February 22,2021

WARNING - Verify design parameters and READ NOTES ON THIS AND INCLUDED MITEK REFERENCE PAGE MII-7473 rev. 5/19/2020 BEFORE USE.
Design valid for use only with MiTek® connectors. This design is based only upon parameters shown, and is for an individual building component, not a truss system. Before use, the building designer must verify the applicability of design parameters and properly incorporate this design into the overall building design. Bracing indicated is to prevent buckling of individual truss web and/or chord members only. Additional temporary and permanent bracing is always required for stability and to prevent collapse with possible personal injury and property damage. For general guidance regarding the fabrication, storage, delivery, erection and bracing of trusses and truss systems, see **ANSI/TPI1 Quality Criteria, DSB-89 and BCSI Building Component Safety Information** available from Truss Plate Institute, 2670 Crain Highway, Suite 203 Waldorf, MD 20601

ENGINEERING BY TRENCO A MiTek Affiliate
818 Soundside Road
Edenton, NC 27932

Job	Truss	Truss Type	Qty	Ply	KB Home 150.1910 C2
150_1910_C2	V1	Valley	1	1	I44899815 Job Reference (optional)

84 Components (Dunn), Dunn, NC - 28334, 8.430 s Feb 12 2021 MiTek Industries, Inc. Mon Feb 22 09:04:47 2021 Page 1
ID:VMD62rz1yiHD_OqRtbnrlFztQ8K-xRoxM9wlDyPZ_ob3rpOSv4O5j5?RV8W1lgGICtzidrk

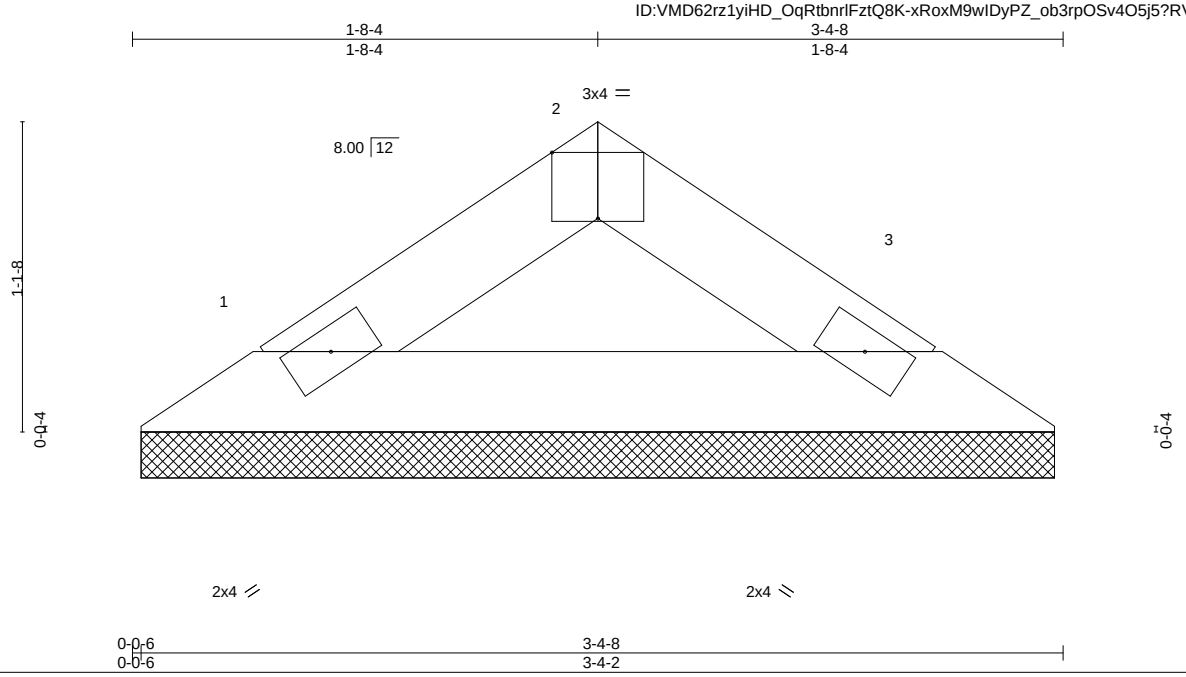

Plate Offsets (X,Y)-- [2:0-2-0,Edge]

LOADING (psf)		**SPACING-**	2-0-0	**CSI.**		**DEFL.**	in	(loc)	l/defl	L/d	**PLATES**	**GRIP**
TCLL (roof)	20.0	Plate Grip DOL	1.15	TC	0.04	Vert(LL)	n/a	-	n/a	999	MT20	244/190
Snow (Pf/Pg)	11.6/15.0	Lumber DOL	1.15	BC	0.11	Vert(CT)	n/a	-	n/a	999		
TCDL	10.0	Rep Stress Incr	YES	WB	0.00	Horz(CT)	0.00	3	n/a	n/a		
BCLL	0.0 *	Code IRC2015/TPI2014		Matrix-P							Weight: 9 lb	FT = 20%
BCDL	10.0											

LUMBER-
TOP CHORD 2x4 SP No.3
BOT CHORD 2x4 SP No.3

BRACING-
TOP CHORD Structural wood sheathing directly applied or 3-4-8 oc purlins.
BOT CHORD Rigid ceiling directly applied or 10-0-0 oc bracing.

REACTIONS. (size) 1=3-3-12, 3=3-3-12
Max Horz 1=17(LC 11)
Max Uplift 1=-5(LC 14), 3=-5(LC 15)
Max Grav 1=96(LC 2), 3=96(LC 2)

FORCES. (lb) - Max. Comp./Max. Ten. - All forces 250 (lb) or less except when shown.

NOTES-
1) Unbalanced roof live loads have been considered for this design.
2) Wind: ASCE 7-10; Vult=120mph Vasd=95mph; TCDL=6.0psf; BCDL=6.0psf; h=25ft; Cat. II; Exp B; Enclosed; MWFRS (envelope) gable end zone and C-C Exterior(2) zone;C-C for members and forces & MWFRS for reactions shown; Lumber DOL=1.60 plate grip DOL=1.60
3) TCLL: ASCE 7-10; Pr=20.0 psf (roof live load: Lumber DOL=1.15 Plate DOL=1.15); Pg=15.0 psf (ground snow); Pf=11.6 psf (flat roof snow: Lumber DOL=1.15 Plate DOL=1.15); Category II; Exp B; Partially Exp.; Ct=1.10
4) Gable requires continuous bottom chord bearing.
5) This truss has been designed for a 10.0 psf bottom chord live load nonconcurrent with any other live loads.
6) * This truss has been designed for a live load of 20.0psf on the bottom chord in all areas where a rectangle 3-6-0 tall by 2-0-0 wide will fit between the bottom chord and any other members.
7) Provide mechanical connection (by others) of truss to bearing plate capable of withstanding 100 lb uplift at joint(s) 1, 3.

February 22,2021

WARNING - Verify design parameters and READ NOTES ON THIS AND INCLUDED MITEK REFERENCE PAGE MII-7473 rev. 5/19/2020 BEFORE USE.
Design valid for use only with MiTek® connectors. This design is based only upon parameters shown, and is for an individual building component, not a truss system. Before use, the building designer must verify the applicability of design parameters and properly incorporate this design into the overall building design. Bracing indicated is to prevent buckling of individual truss web and/or chord members only. Additional temporary and permanent bracing is always required for stability and to prevent collapse with possible personal injury and property damage. For general guidance regarding the fabrication, storage, delivery, erection and bracing of trusses and truss systems, see **ANSI/TPI1 Quality Criteria, DSB-89 and BCSI Building Component Safety Information** available from Truss Plate Institute, 2670 Crain Highway, Suite 203 Waldorf, MD 20601

ENGINEERING BY TRENCO A MiTek Affiliate
818 Soundside Road
Edenton, NC 27932

Job	Truss	Truss Type	Qty	Ply	KB Home 150.1910 C2
150_1910_C2	V2	Valley	1	1	I44899816 Job Reference (optional)

84 Components (Dunn), Dunn, NC - 28334, 8.430 s Feb 12 2021 MiTek Industries, Inc. Mon Feb 22 09:04:48 2021 Page 1
ID:VMD62rz1yiHD_OqRtbnrlFztQ8K-PdMJZVww_GYQcyAFPWvhRIxAiVJ2EbAA_K0rkKzidrj

Scale = 1:19.1

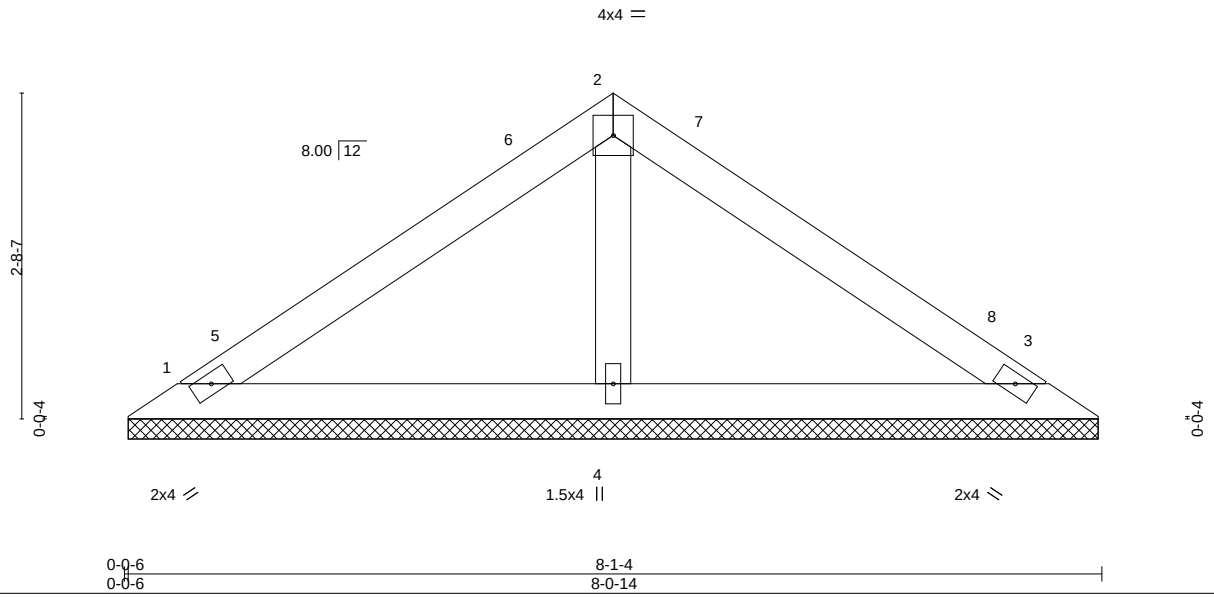

LOADING (psf)		SPACING-	2-0-0	CSI.		DEFL.	in	(loc)	l/defl	L/d	PLATES	GRIP
TCLL (roof)	20.0	Plate Grip DOL	1.15	TC	0.41	Vert(LL)	n/a	-	n/a	999	MT20	244/190
Snow (Pf/Pg)	11.6/15.0	Lumber DOL	1.15	BC	0.22	Vert(CT)	n/a	-	n/a	999		
TCDL	10.0	Rep Stress Incr	YES	WB	0.04	Horz(CT)	0.00	3	n/a	n/a		
BCLL	0.0 *	Code IRC2015/TPI2014		Matrix-P							Weight: 28 lb	FT = 20%
BCDL	10.0											

LUMBER-
TOP CHORD 2x4 SP No.3
BOT CHORD 2x4 SP No.3
OTHERS 2x4 SP No.3

BRACING-
TOP CHORD Structural wood sheathing directly applied or 6-0-0 oc purlins.
BOT CHORD Rigid ceiling directly applied or 10-0-0 oc bracing.

REACTIONS. (size) 1=8-0-8, 3=8-0-8, 4=8-0-8
Max Horz 1=50(LC 11)
Max Uplift 1=-23(LC 14), 3=-30(LC 15)
Max Grav 1=153(LC 2), 3=153(LC 2), 4=265(LC 2)

FORCES. (lb) - Max. Comp./Max. Ten. - All forces 250 (lb) or less except when shown.

NOTES-
1) Unbalanced roof live loads have been considered for this design.
2) Wind: ASCE 7-10; Vult=120mph Vasd=95mph; TCDL=6.0psf; BCDL=6.0psf; h=25ft; Cat. II; Exp B; Enclosed; MWFRS (envelope) gable end zone and C-C Exterior(2) 0-5-12 to 3-5-12, Interior(1) 3-5-12 to 4-0-10, Exterior(2) 4-0-10 to 7-0-10, Interior(1) 7-0-10 to 7-7-7 zone;C-C for members and forces & MWFRS for reactions shown; Lumber DOL=1.60 plate grip DOL=1.60
3) TCLL: ASCE 7-10; Pr=20.0 psf (roof live load: Lumber DOL=1.15 Plate DOL=1.15); Pg=15.0 psf (ground snow); Pf=11.6 psf (flat roof snow: Lumber DOL=1.15 Plate DOL=1.15); Category II; Exp B; Partially Exp.; Ct=1.10
4) Gable requires continuous bottom chord bearing.
5) This truss has been designed for a 10.0 psf bottom chord live load nonconcurrent with any other live loads.
6) * This truss has been designed for a live load of 20.0psf on the bottom chord in all areas where a rectangle 3-6-0 tall by 2-0-0 wide will fit between the bottom chord and any other members.
7) Provide mechanical connection (by others) of truss to bearing plate capable of withstanding 100 lb uplift at joint(s) 1, 3.

February 22,2021

WARNING - Verify design parameters and READ NOTES ON THIS AND INCLUDED MITEK REFERENCE PAGE MII-7473 rev. 5/19/2020 BEFORE USE.
Design valid for use only with MiTek® connectors. This design is based only upon parameters shown, and is for an individual building component, not a truss system. Before use, the building designer must verify the applicability of design parameters and properly incorporate this design into the overall building design. Bracing indicated is to prevent buckling of individual truss web and/or chord members only. Additional temporary and permanent bracing is always required for stability and to prevent collapse with possible personal injury and property damage. For general guidance regarding the fabrication, storage, delivery, erection and bracing of trusses and truss systems, see **ANSI/TPI1 Quality Criteria, DSB-89 and BCSI Building Component Safety Information** available from Truss Plate Institute, 2670 Crain Highway, Suite 203 Waldorf, MD 20601

ENGINEERING BY TRENCO A MiTek Affiliate
818 Soundside Road
Edenton, NC 27932

Job	Truss	Truss Type	Qty	Ply	KB Home 150.1910 C2
150_1910_C2	V3	Valley	1	1	I44899817 Job Reference (optional)

84 Components (Dunn), Dunn, NC - 28334, 8.430 s Feb 12 2021 MiTek Industries, Inc. Mon Feb 22 09:04:49 2021 Page 1
ID:VMD62rz1yiHD_OqRtbnrlFztQ8K-tqwimrxYlZgHD6lRzEQw_VTQtuhXz2iKC_IPGmzidri

Scale = 1:14.0

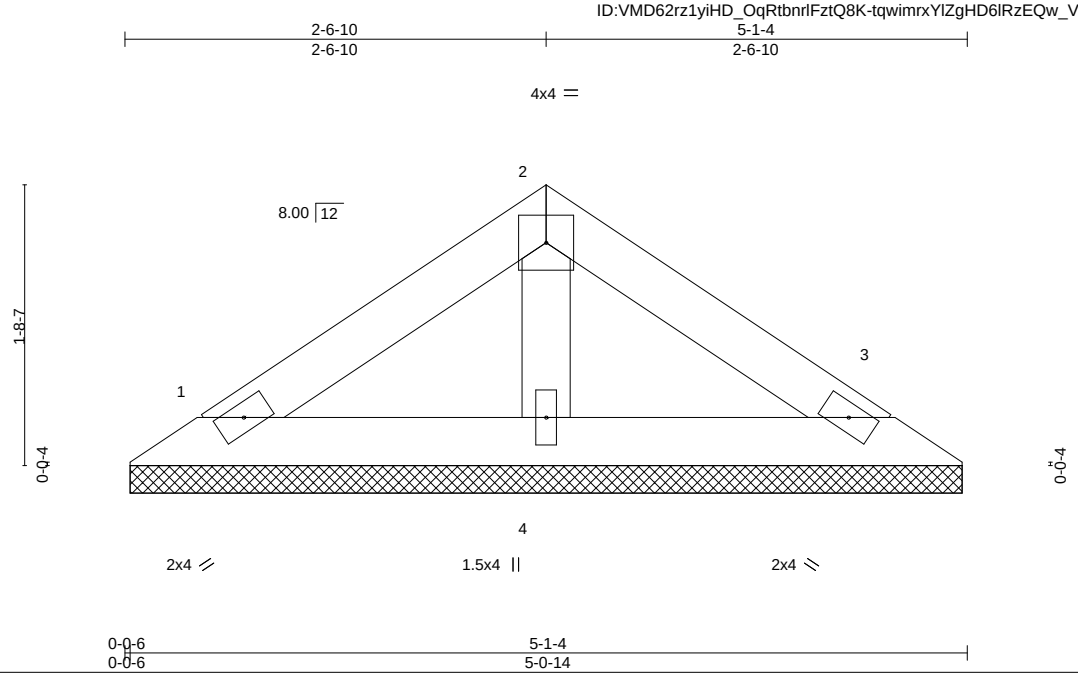

LOADING (psf)		SPACING-	2-0-0	CSI.		DEFL.	in	(loc)	l/defl	L/d	PLATES	GRIP
TCLL (roof)	20.0	Plate Grip DOL	1.15	TC	0.13	Vert(LL)	n/a	-	n/a	999	MT20	244/190
Snow (Pf/Pg)	11.6/15.0	Lumber DOL	1.15	BC	0.07	Vert(CT)	n/a	-	n/a	999		
TCDL	10.0	Rep Stress Incr	YES	WB	0.02	Horz(CT)	0.00	3	n/a	n/a		
BCLL	0.0 *	Code IRC2015/TPI2014		Matrix-P							Weight: 17 lb	FT = 20%
BCDL	10.0											

LUMBER-
TOP CHORD 2x4 SP No.3
BOT CHORD 2x4 SP No.3
OTHERS 2x4 SP No.3

BRACING-
TOP CHORD Structural wood sheathing directly applied or 5-1-4 oc purlins.
BOT CHORD Rigid ceiling directly applied or 10-0-0 oc bracing.

REACTIONS. (size) 1=5-0-8, 3=5-0-8, 4=5-0-8
Max Horz 1=-29(LC 10)
Max Uplift 1=-13(LC 14), 3=-17(LC 15)
Max Grav 1=89(LC 2), 3=89(LC 2), 4=154(LC 2)

FORCES. (lb) - Max. Comp./Max. Ten. - All forces 250 (lb) or less except when shown.

NOTES-
1) Unbalanced roof live loads have been considered for this design.
2) Wind: ASCE 7-10; Vult=120mph Vasd=95mph; TCDL=6.0psf; BCDL=6.0psf; h=25ft; Cat. II; Exp B; Enclosed; MWFRS (envelope) gable end zone and C-C Exterior(2) zone;C-C for members and forces & MWFRS for reactions shown; Lumber DOL=1.60 plate grip DOL=1.60
3) TCLL: ASCE 7-10; Pr=20.0 psf (roof live load: Lumber DOL=1.15 Plate DOL=1.15); Pg=15.0 psf (ground snow); Pf=11.6 psf (flat roof snow: Lumber DOL=1.15 Plate DOL=1.15); Category II; Exp B; Partially Exp.; Ct=1.10
4) Gable requires continuous bottom chord bearing.
5) This truss has been designed for a 10.0 psf bottom chord live load nonconcurrent with any other live loads.
6) * This truss has been designed for a live load of 20.0psf on the bottom chord in all areas where a rectangle 3-6-0 tall by 2-0-0 wide will fit between the bottom chord and any other members.
7) Provide mechanical connection (by others) of truss to bearing plate capable of withstanding 100 lb uplift at joint(s) 1, 3.

February 22,2021

WARNING - Verify design parameters and READ NOTES ON THIS AND INCLUDED MITEK REFERENCE PAGE MII-7473 rev. 5/19/2020 BEFORE USE.
Design valid for use only with MiTek® connectors. This design is based only upon parameters shown, and is for an individual building component, not a truss system. Before use, the building designer must verify the applicability of design parameters and properly incorporate this design into the overall building design. Bracing indicated is to prevent buckling of individual truss web and/or chord members only. Additional temporary and permanent bracing is always required for stability and to prevent collapse with possible personal injury and property damage. For general guidance regarding the fabrication, storage, delivery, erection and bracing of trusses and truss systems, see **ANSI/TPI1 Quality Criteria, DSB-89 and BCSI Building Component Safety Information** available from Truss Plate Institute, 2670 Crain Highway, Suite 203 Waldorf, MD 20601

ENGINEERING BY TRENCO A MiTek Affiliate
818 Soundside Road
Edenton, NC 27932

Symbols

PLATE LOCATION AND ORIENTATION

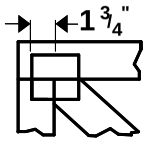

Center plate on joint unless x, y offsets are indicated. Dimensions are in ft-in-sixteenths. Apply plates to both sides of truss and fully embed teeth.

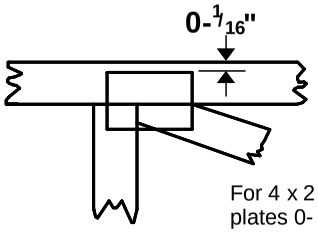

For 4 x 2 orientation, locate plates 0- 1/16" from outside edge of truss.

This symbol indicates the required direction of slots in connector plates.

*** Plate location details available in MiTek 20/20 software or upon request.**

PLATE SIZE

4 x 4

The first dimension is the plate width measured perpendicular to slots. Second dimension is the length parallel to slots.

LATERAL BRACING LOCATION

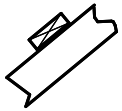

Indicated by symbol shown and/or by text in the bracing section of the output. Use T or I bracing if indicated.

BEARING

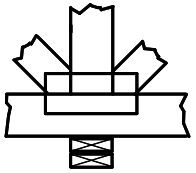

Indicates location where bearings (supports) occur. Icons vary but reaction section indicates joint number where bearings occur. Min size shown is for crushing only.

Industry Standards:

ANSI/TPI1: National Design Specification for Metal Plate Connected Wood Truss Construction.
DSB-89: Design Standard for Bracing.
BCSI: Building Component Safety Information, Guide to Good Practice for Handling, Installing & Bracing of Metal Plate Connected Wood Trusses.

Numbering System

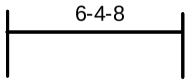

dimensions shown in ft-in-sixteenths
(Drawings not to scale)

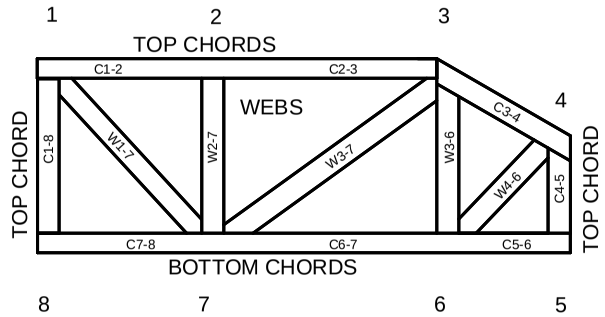

JOINTS ARE GENERALLY NUMBERED/LETTERED CLOCKWISE AROUND THE TRUSS STARTING AT THE JOINT FARTHEST TO THE LEFT.

CHORDS AND WEBS ARE IDENTIFIED BY END JOINT NUMBERS/LETTERS.

PRODUCT CODE APPROVALS

ICC-ES Reports:

ESR-1311, ESR-1352, ESR1988
ER-3907, ESR-2362, ESR-1397, ESR-3282

Trusses are designed for wind loads in the plane of the truss unless otherwise shown.

Lumber design values are in accordance with ANSI/TPI 1 section 6.3 These truss designs rely on lumber values established by others.

© 2012 MiTek® All Rights Reserved

MiTek

ENGINEERING BY TRENCO
A MiTek Affiliate

General Safety Notes

Failure to Follow Could Cause Property Damage or Personal Injury

1. Additional stability bracing for truss system, e.g. diagonal or X-bracing, is always required. See BCSI.
2. Truss bracing must be designed by an engineer. For wide truss spacing, individual lateral braces themselves may require bracing, or alternative Tor I bracing should be considered.
3. Never exceed the design loading shown and never stack materials on inadequately braced trusses.
4. Provide copies of this truss design to the building designer, erection supervisor, property owner and all other interested parties.
5. Cut members to bear tightly against each other.
6. Place plates on each face of truss at each joint and embed fully. Knots and wane at joint locations are regulated by ANSI/TPI 1.
7. Design assumes trusses will be suitably protected from the environment in accord with ANSI/TPI 1.
8. Unless otherwise noted, moisture content of lumber shall not exceed 19% at time of fabrication.
9. Unless expressly noted, this design is not applicable for use with fire retardant, preservative treated, or green lumber.
10. Camber is a non-structural consideration and is the responsibility of truss fabricator. General practice is to camber for dead load deflection.
11. Plate type, size, orientation and location dimensions indicated are minimum plating requirements.
12. Lumber used shall be of the species and size, and in all respects, equal to or better than that specified.
13. Top chords must be sheathed or purlins provided at spacing indicated on design.
14. Bottom chords require lateral bracing at 10 ft. spacing, or less, if no ceiling is installed, unless otherwise noted.
15. Connections not shown are the responsibility of others.
16. Do not cut or alter truss member or plate without prior approval of an engineer.
17. Install and load vertically unless indicated otherwise.
18. Use of green or treated lumber may pose unacceptable environmental, health or performance risks. Consult with project engineer before use.
19. Review all portions of this design (front, back, words and pictures) before use. Reviewing pictures alone is not sufficient.
20. Design assumes manufacture in accordance with ANSI/TPI 1 Quality Criteria.
21. The design does not take into account any dynamic or other loads other than those expressly stated.