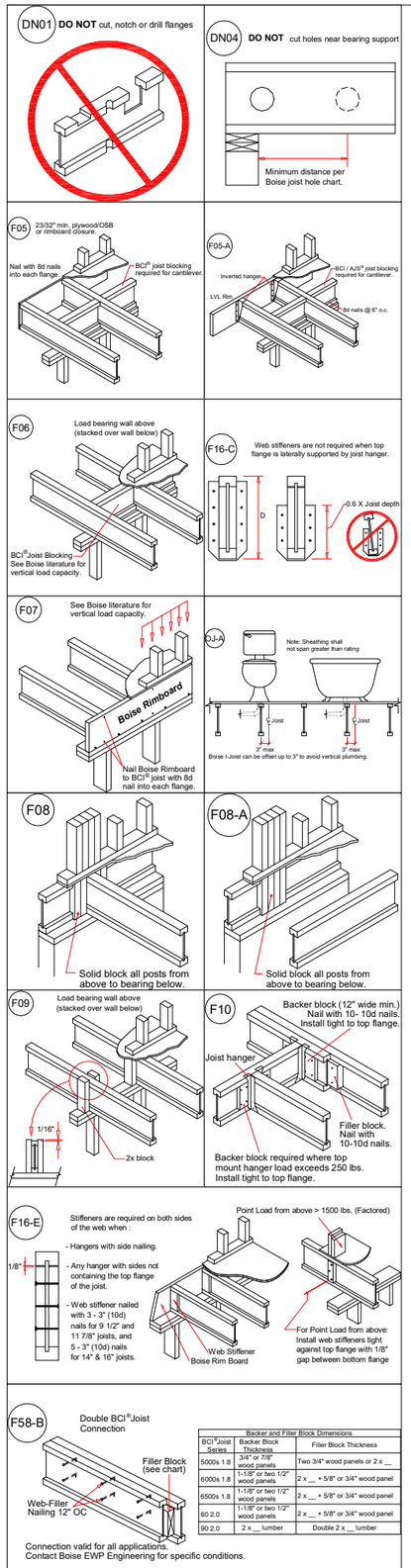

Backer and Filler Block Dimensions		
BCI®Joist Series	Backer Block Thickness	Filler Block Thickness
5000s 1.8	3/4" or 7/8" wood panels	Two 3/4" wood panels or 2 x __
6000s 1.8	1-1/8" or two 1/2" wood panels	2 x __ + 5/8" or 3/4" wood panel
6500s 1.8	1-1/8" or two 1/2" wood panels	2 x __ + 5/8" or 3/4" wood panel
60 2.0	1-1/8" or two 1/2" wood panels	2 x __ + 5/8" or 3/4" wood panel
90 2.0	2 x __ lumber	Double 2 x __ lumber

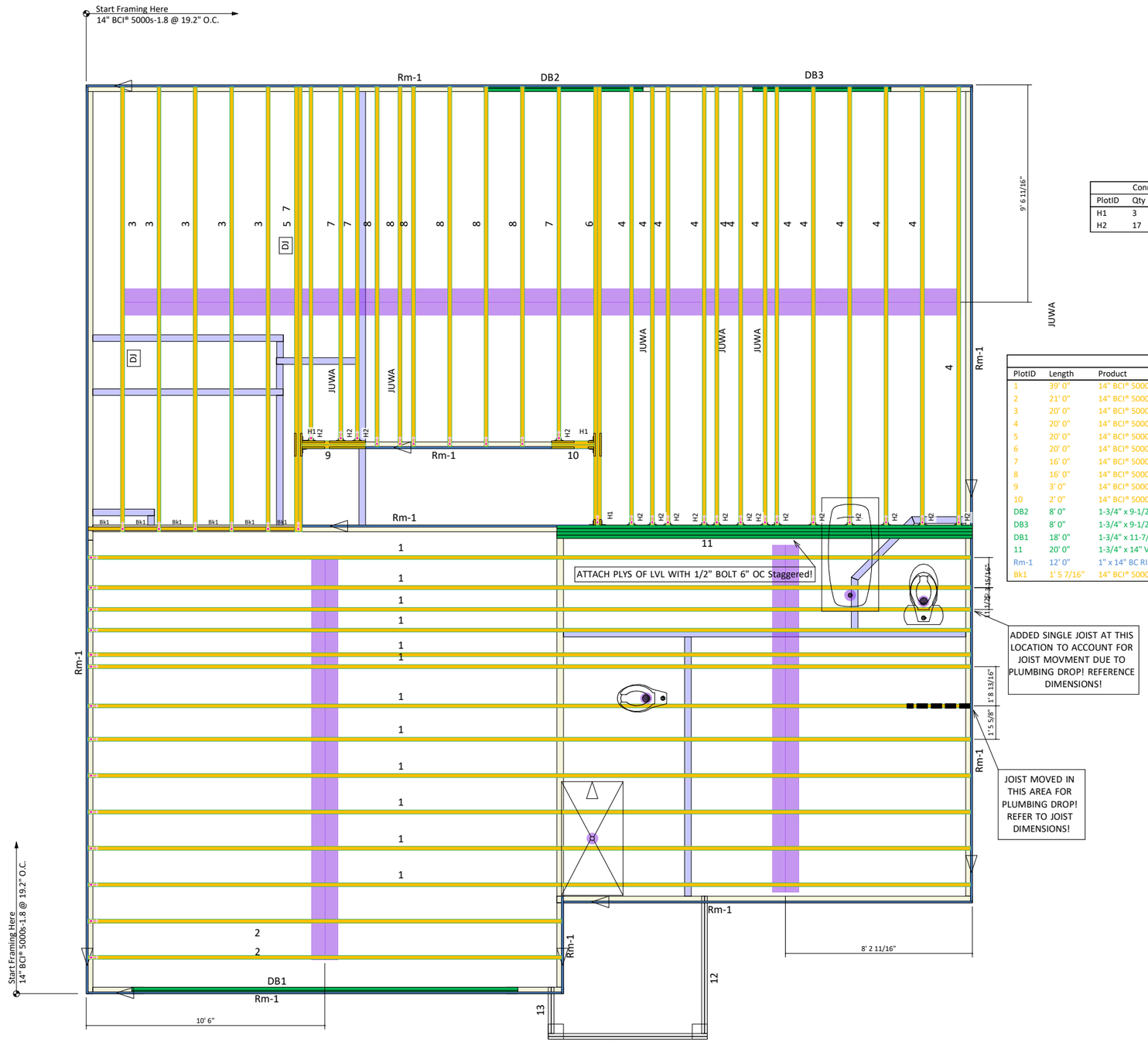

Second Floor Layout

Connector Summary			
PlotID	Qty	Manuf	Product
H1	3	Simpson	HU4.12/9
H2	17	Simpson	IUS2.06/14

Products				
PlotID	Length	Product	Plies	Net Qty
1	39' 0"	14" BCI® 5000s-1.8	1	12
2	21' 0"	14" BCI® 5000s-1.8	1	2
3	20' 0"	14" BCI® 5000s-1.8	1	5
4	20' 0"	14" BCI® 5000s-1.8	1	13
5	20' 0"	14" BCI® 5000s-1.8	2	2
6	20' 0"	14" BCI® 5000s-1.8	2	2
7	16' 0"	14" BCI® 5000s-1.8	1	4
8	16' 0"	14" BCI® 5000s-1.8	1	6
9	3' 0"	14" BCI® 5000s-1.8	2	2
10	2' 0"	14" BCI® 5000s-1.8	2	2
DB2	8' 0"	1-3/4" x 9-1/2" VERSA-LAM® 2.0 3100 SP	2	2
DB3	8' 0"	1-3/4" x 9-1/2" VERSA-LAM® 2.0 3100 SP	2	2
DB1	18' 0"	1-3/4" x 11-7/8" VERSA-LAM® 2.0 3100 SP	2	2
11	20' 0"	1-3/4" x 14" VERSA-LAM® 2.0 3100 SP	4	4
Rm-1	12' 0"	1" x 14" BC RIM BOARD OSB	1	15
Bk1	1' 5 7/16"	14" BCI® 5000s-1.8	1	6

84 LUMBER

Indicates "NO CUT END" === Material to be Trimmed from OTHER END ONLY

International Residential Code - R502.8.2 Engineered Wood Products - - - Cuts, notches and holes bored in trusses, laminated veneer lumber, glue-laminated members or I-joists are not permitted unless such penetrations are specifically considered in the design of the member or meet the manufacturers guidelines.

*** ANY Concealed Flange Hangers MUST be Installed PRIOR to Setting the Carried Members!! ***

All materials, (EWP, hangers etc.) shall be installed per manufacturer specific installation guides.

Squash blocks shall be installed under all point loads, and are to be greater than or equal to the dimensions of the post transferring the load from above.

Builder or framer should review this material placement layout prior to beginning construction of floor system. This layout DOES NOT supercede the plan set.

Dimensions to any obstructions are approximate and should be field verified. Any discrepancies will be reported prior to floor installation.

Plan Information

Lot Number: 70 Woodgrove

Model: Hayden K

Builder: Builder Name

Boise BC FRAMER II / SAPPHIRE Structure

Plan Date: 02/12/2021

Structural Date: 02/12/2021

Not To Scale | By: JH

Sheet: 2/4 | Current Date: Enter Current Date