ENGINEERING BY TRENCO
A MiTek Affiliate

Trenco
818 Soundside Rd
Edenton, NC 27932

Re: Farm
Clearwater Farm

The truss drawing(s) referenced below have been prepared by Truss Engineering Co. under my direct supervision based on the parameters provided by Builders FirstSource-Apex,NC.

Pages or sheets covered by this seal: I51100388 thru I51100422

My license renewal date for the state of North Carolina is December 31, 2022.

North Carolina COA: C-0844

NORTH CAROLINA PROFESSIONAL SEAL 036322 ENGINEER ERIC A. GILBERT

April 1,2022

Gilbert, Eric

IMPORTANT NOTE: The seal on these truss component designs is a certification that the engineer named is licensed in the jurisdiction(s) identified and that the designs comply with ANSI/TPI 1. These designs are based upon parameters shown (e.g., loads, supports, dimensions, shapes and design codes), which were given to MiTek or TRENCO. Any project specific information included is for MiTek's or TRENCO's customers file reference purpose only, and was not taken into account in the preparation of these designs. MiTek or TRENCO has not independently verified the applicability of the design parameters or the designs for any particular building. Before use, the building designer should verify applicability of design parameters and properly incorporate these designs into the overall building design per ANSI/TPI 1, Chapter 2.

Job	Truss	Truss Type	Qty	Ply	Clearwater Farm
FARM	A07	HIP	1	1	I51100388 Job Reference (optional)

Builders FirstSource (Apex, NC), Apex, NC - 27523, 8.530 s Dec 6 2021 MiTek Industries, Inc. Thu Mar 31 10:15:12 2022 Page 1
ID:zbkIr1dFypInNUy02maTGGyYVBm-71dcAZWw8Yo14QH6n4mroAqaGd?44BX_SniuJ9zVRxz

-1-0-0	10-1-12	20-0-0	29-6-0	39-0-0	48-10-4	59-0-0	60-0-0
1-0-0	10-1-12	9-10-4	9-6-0	9-6-0	9-10-4	10-1-12	1-0-0

Scale = 1:102.9

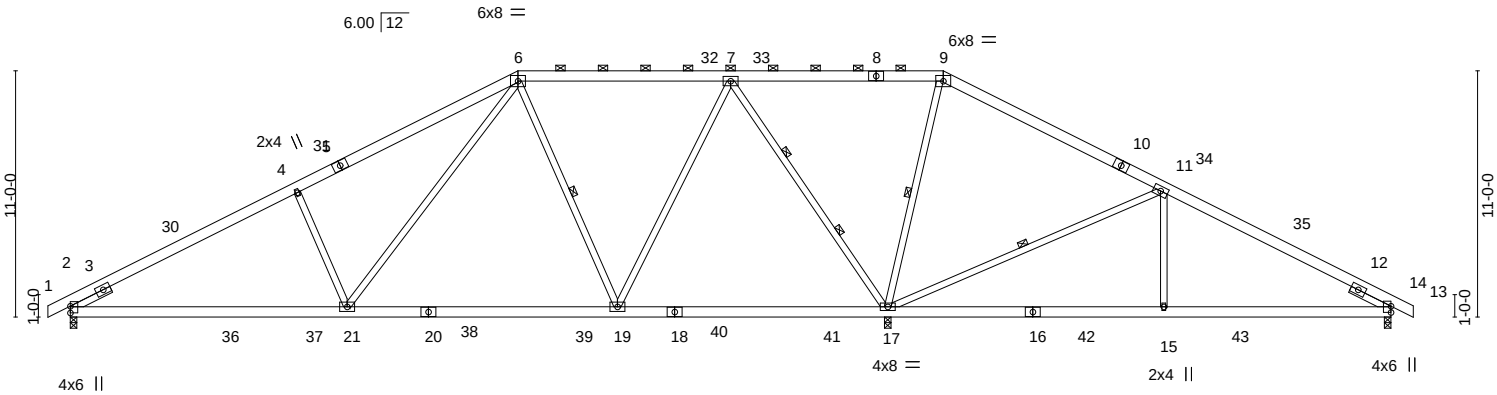

12-4-7	24-5-5	36-6-4	48-10-4	59-0-0
12-4-7	12-0-15	12-0-15	12-4-0	10-1-12

LOADING (psf)		**SPACING-** 2-0-0	**CSI.**		**DEFL.**	in	(loc)	l/defl	L/d	**PLATES**	**GRIP**
TCLL	20.0	Plate Grip DOL 1.15	TC	0.65	Vert(LL)	-0.18	19-21	>999	360	MT20	244/190
TCDL	10.0	Lumber DOL 1.15	BC	0.73	Vert(CT)	-0.31	19-21	>999	240		
BCLL	0.0 *	Rep Stress Incr YES	WB	0.99	Horz(CT)	0.04	17	n/a	n/a		
BCDL	10.0	Code IRC2015/TPI2014	Matrix-MS		Wind(LL)	0.05	21-24	>999	240	Weight: 420 lb	FT = 20%

LUMBER-
TOP CHORD 2x6 SP No.2
BOT CHORD 2x6 SP No.2
WEBS 2x4 SP No.3 *Except*
6-21,7-17,11-17: 2x4 SP No.2
SLIDER Left 2x4 SP No.3 1-11-12, Right 2x4 SP No.3 1-11-12

BRACING-
TOP CHORD Structural wood sheathing directly applied or 4-8-7 oc purlins, except 2-0-0 oc purlins (6-0-0 max.): 6-9.
BOT CHORD Rigid ceiling directly applied or 10-0-0 oc bracing.
WEBS 1 Row at midpt 6-19, 9-17, 11-17
2 Rows at 1/3 pts 7-17

REACTIONS. (size) 2=0-3-8, 17=0-3-8 (req. 0-3-10), 13=0-3-8
Max Horz 2=-140(LC 13)
Max Uplift 2=-115(LC 12), 13=-120(LC 13)
Max Grav 2=1351(LC 25), 17=3090(LC 2), 13=711(LC 24)

FORCES. (lb) - Max. Comp./Max. Ten. - All forces 250 (lb) or less except when shown.
TOP CHORD 2-4=-2061/215, 4-6=-1899/286, 6-7=-781/213, 7-9=0/789, 9-11=0/783, 11-13=-747/205
BOT CHORD 2-21=-218/1766, 19-21=-57/983, 17-19=-58/351, 15-17=-70/589, 13-15=-70/589
WEBS 4-21=-556/251, 6-21=-109/1048, 6-19=-606/156, 7-19=-1/1121, 7-17=-1844/160, 9-17=-783/119, 11-17=-1128/183, 11-15=0/475

NOTES-
1) Unbalanced roof live loads have been considered for this design.
2) Wind: ASCE 7-10; Vult=115mph Vasd=91mph; TCDL=6.0psf; BCDL=6.0psf; h=32ft; Cat. II; Exp B; Enclosed; MWFRS (envelope) gable end zone and C-C Exterior(2) -1-0-0 to 4-10-13, Interior(1) 4-10-13 to 20-0-0, Exterior(2) 20-0-0 to 28-4-2, Interior(1) 28-4-2 to 39-0-0, Exterior(2) 39-0-0 to 47-4-2, Interior(1) 47-4-2 to 60-0-0 zone; cantilever left and right exposed ; end vertical left and right exposed;C-C for members and forces & MWFRS for reactions shown; Lumber DOL=1.60 plate grip DOL=1.60
3) Provide adequate drainage to prevent water ponding.
4) All plates are 5x8 MT20 unless otherwise indicated.
5) This truss has been designed for a 10.0 psf bottom chord live load nonconcurrent with any other live loads.
6) * This truss has been designed for a live load of 20.0psf on the bottom chord in all areas where a rectangle 3-6-0 tall by 2-0-0 wide will fit between the bottom chord and any other members, with BCDL = 10.0psf.
7) WARNING: Required bearing size at joint(s) 17 greater than input bearing size.
8) Provide mechanical connection (by others) of truss to bearing plate capable of withstanding 115 lb uplift at joint 2 and 120 lb uplift at joint 13.
9) Graphical purlin representation does not depict the size or the orientation of the purlin along the top and/or bottom chord.

April 1,2022

ENGINEERING BY TRENCO A MiTek Affiliate
818 Soundside Road
Edenton, NC 27932

Job	Truss	Truss Type	Qty	Ply	Clearwater Farm
FARM	A07G	GABLE	1	1	I51100389 Job Reference (optional)

Builders FirstSource (Apex, NC), Apex, NC - 27523, 8.530 s Dec 6 2021 MiTek Industries, Inc. Thu Mar 31 10:15:15 2022 Page 1
ID:zbkIr1dFypInNUy02maTGGyYVBm-XcJlpbZoRTAbxt0hSCJYQoSCKrBPHlVQ8lxYwUzVRxw

-1-0-0 20-0-0 39-0-0 59-0-0 60-0-0
1-0-0 20-0-0 19-0-0 20-0-0 1-0-0

Scale = 1:102.9

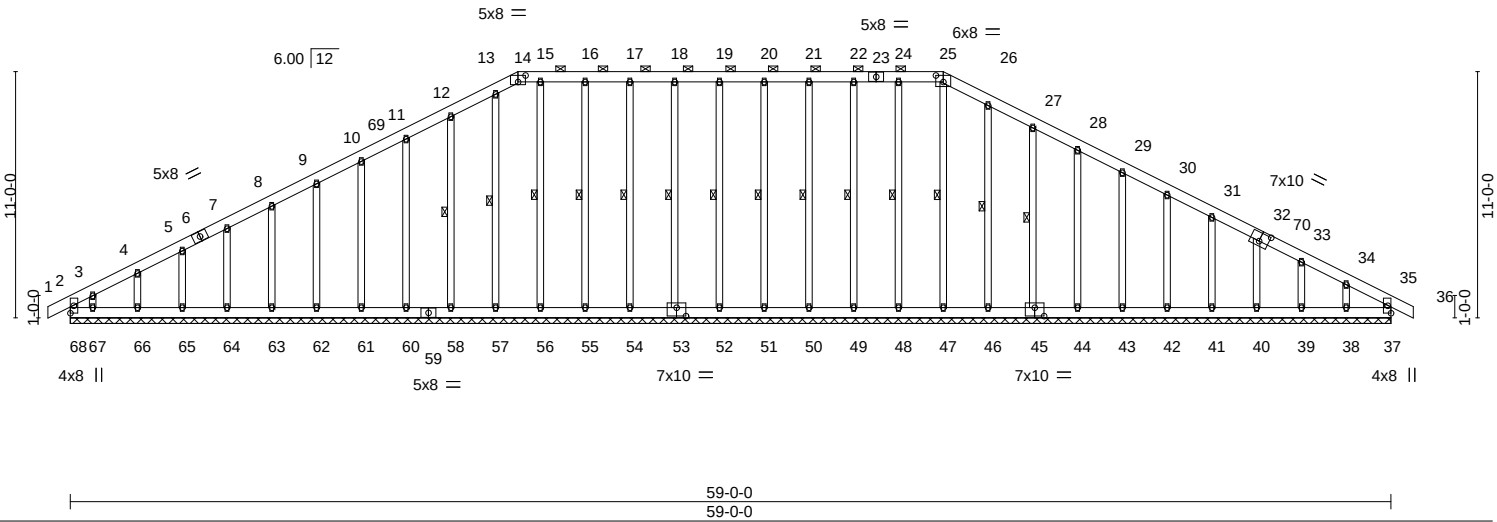

Plate Offsets (X,Y)-- [14:0-4-0,0-3-8], [25:0-4-0,0-3-8], [32:0-5-0,0-4-8], [45:0-5-0,0-4-8], [53:0-5-0,0-4-8]

LOADING (psf)		SPACING- 2-0-0		CSI.		DEFL.	in	(loc)	l/defl	L/d	PLATES	GRIP
TCLL	20.0	Plate Grip DOL	1.15	TC	0.15	Vert(LL)	-0.00	35	n/r	120	MT20	244/190
TCDL	10.0	Lumber DOL	1.15	BC	0.05	Vert(CT)	-0.00	36	n/r	120		
BCLL	0.0 *	Rep Stress Incr	NO	WB	0.14	Horz(CT)	0.01	37	n/a	n/a		
BCDL	10.0	Code IRC2015/TPI2014		Matrix-R							Weight: 588 lb	FT = 20%

LUMBER-
TOP CHORD 2x6 SP No.2
BOT CHORD 2x6 SP No.2
WEBS 2x4 SP No.3
OTHERS 2x4 SP No.3

BRACING-
TOP CHORD Structural wood sheathing directly applied or 6-0-0 oc purlins, except end verticals, and 2-0-0 oc purlins (6-0-0 max.): 14-25.
BOT CHORD Rigid ceiling directly applied or 10-0-0 oc bracing.
WEBS 1 Row at midpt 25-47, 24-48, 22-49, 21-50, 20-51, 19-52, 18-53, 17-54, 16-55, 15-56, 13-57, 12-58, 26-46, 27-45

REACTIONS. All bearings 59-0-0.
(lb) - Max Horz 68=125(LC 12)
Max Uplift All uplift 100 lb or less at joint(s) 68, 48, 49, 50, 51, 52, 53, 54, 55, 58, 60, 61, 62, 63, 64, 65, 66, 46, 45, 44, 43, 42, 41, 40, 39, 38 except 67=-139(LC 12)
Max Grav All reactions 250 lb or less at joint(s) 68, 37, 47, 48, 49, 50, 51, 52, 53, 54, 55, 56, 57, 58, 60, 61, 62, 63, 64, 65, 66, 67, 46, 45, 44, 43, 42, 41, 40, 39, 38

FORCES. (lb) - Max. Comp./Max. Ten. - All forces 250 (lb) or less except when shown.
TOP CHORD 11-12=-86/253, 12-13=-100/294, 13-14=-101/290, 14-15=-92/290, 15-16=-92/290, 16-17=-92/290, 17-18=-92/290, 18-19=-92/290, 19-20=-92/290, 20-21=-92/290, 21-22=-92/290, 22-24=-92/290, 24-25=-92/289, 25-26=-104/298, 26-27=-92/266

NOTES-
1) Unbalanced roof live loads have been considered for this design.
2) Wind: ASCE 7-10; Vult=115mph Vasd=91mph; TCDL=6.0psf; BCDL=6.0psf; h=32ft; Cat. II; Exp B; Enclosed; MWFRS (envelope) gable end zone and C-C Corner(3) -1-0-0 to 5-0-0, Exterior(2) 5-0-0 to 20-0-0, Corner(3) 20-0-0 to 25-10-13, Exterior(2) 25-10-13 to 39-0-0, Corner(3) 39-0-0 to 45-0-0, Exterior(2) 45-0-0 to 60-0-0 zone; cantilever left and right exposed ; end vertical left and right exposed;C-C for members and forces & MWFRS for reactions shown; Lumber DOL=1.60 plate grip DOL=1.60
3) Truss designed for wind loads in the plane of the truss only. For studs exposed to wind (normal to the face), see Standard Industry Gable End Details as applicable, or consult qualified building designer as per ANSI/TPI 1.
4) Provide adequate drainage to prevent water ponding.
5) All plates are 2x4 MT20 unless otherwise indicated.
6) Gable requires continuous bottom chord bearing.
7) Truss to be fully sheathed from one face or securely braced against lateral movement (i.e. diagonal web).
8) Gable studs spaced at 2-0-0 oc.
9) This truss has been designed for a 10.0 psf bottom chord live load nonconcurrent with any other live loads.
10) * This truss has been designed for a live load of 20.0psf on the bottom chord in all areas where a rectangle 3-6-0 tall by 2-0-0 wide will fit between the bottom chord and any other members.
11) Provide mechanical connection (by others) of truss to bearing plate capable of withstanding 100 lb uplift at joint(s) 68, 48, 49, 50, 51, 52, 53, 54, 55, 58, 60, 61, 62, 63, 64, 65, 66, 46, 45, 44, 43, 42, 41, 40, 39, 38 except (jt=lb) 67=139.
12) Graphical purlin representation does not depict the size or the orientation of the purlin along the top and/or bottom chord.

April 1,2022

ENGINEERING BY TRENCO A MiTek Affiliate
818 Soundside Road
Edenton, NC 27932

Job	Truss	Truss Type	Qty	Ply	Clearwater Farm
FARM	A07H	HIP	1	1	I51100390 Job Reference (optional)

Builders FirstSource (Apex, NC), Apex, NC - 27523, 8.530 s Dec 6 2021 MiTek Industries, Inc. Thu Mar 31 10:15:17 2022 Page 1
ID:zbkIr1dFypInNUy02maTGGyYVBm-T_QVDGa3z4RJBBA3adM0VDYRKejXlTljb2Qf_MzVRxu

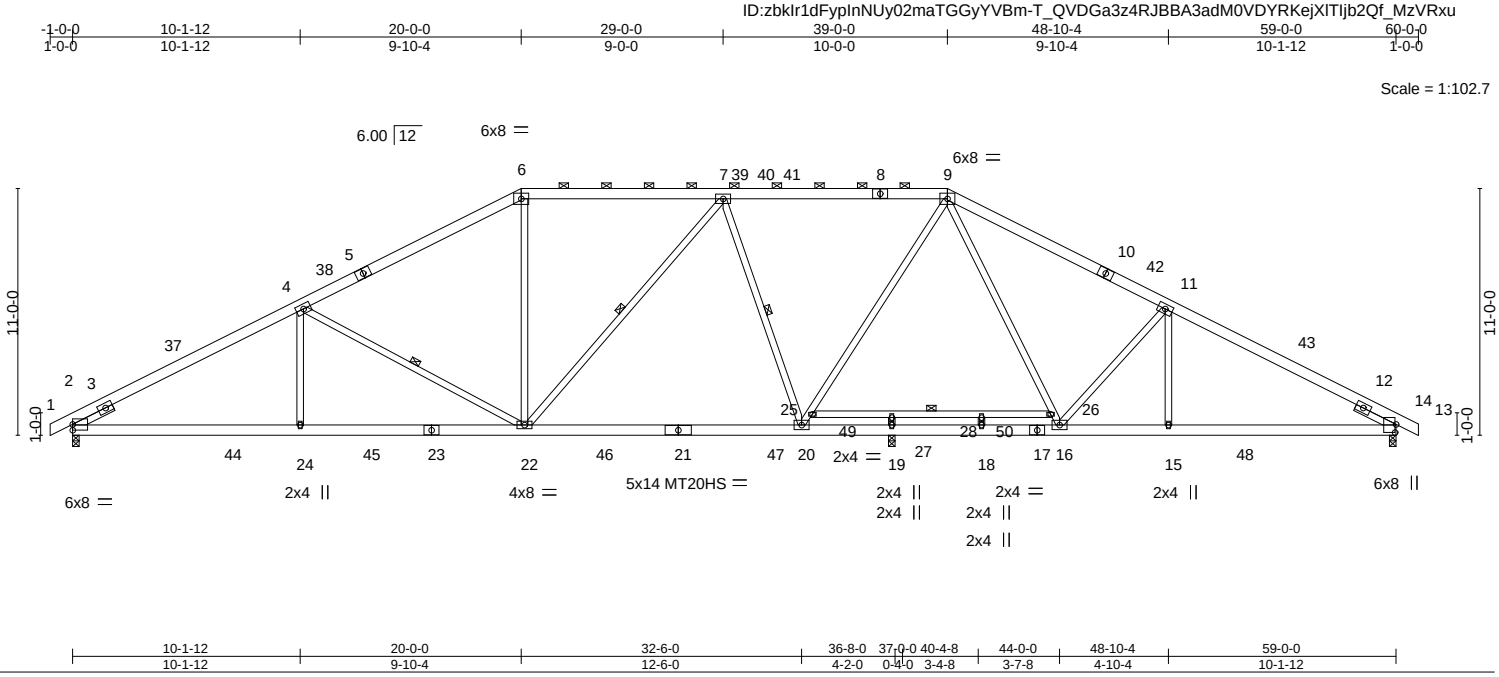

Plate Offsets (X,Y)-- [2:0-0-0,0-3-2], [13:0-4-6,0-0-9]

LOADING (psf)		SPACING- 2-0-0		CSI.		DEFL.	in	(loc)	l/defl	L/d	PLATES	GRIP
TCLL	20.0	Plate Grip DOL	1.15	TC	0.63	Vert(LL)	-0.39	20-22	>999	360	MT20	244/190
TCDL	10.0	Lumber DOL	1.15	BC	0.64	Vert(CT)	-0.70	20-22	>628	240	MT20HS	187/143
BCLL	0.0 *	Rep Stress Incr	NO	WB	0.96	Horz(CT)	0.13	13	n/a	n/a		
BCDL	10.0	Code IRC2015/TPI2014		Matrix-MS		Wind(LL)	0.15	20-22	>999	240	Weight: 443 lb	FT = 20%

LUMBER-
TOP CHORD 2x6 SP DSS *Except*
6-8,8-9: 2x6 SP No.2
BOT CHORD 2x6 SP DSS
WEBS 2x4 SP No.3 *Except*
7-22: 2x4 SP No.2
SLIDER Left 2x4 SP No.3 1-11-12, Right 2x4 SP No.3 1-11-12

BRACING-
TOP CHORD Structural wood sheathing directly applied or 3-11-2 oc purlins, except
2-0-0 oc purlins (4-0-4 max.): 6-9.
BOT CHORD Rigid ceiling directly applied or 10-0-0 oc bracing.
WEBS 1 Row at midpt 4-22, 7-22, 7-20, 25-26

REACTIONS. (size) 2=0-3-8, 19=0-3-8, 13=0-3-8
Max Horz 2=-140(LC 13)
Max Uplift 2=-120(LC 12), 13=-128(LC 13)
Max Grav 2=2173(LC 2), 19=845(LC 3), 13=1989(LC 1)

FORCES. (lb) - Max. Comp./Max. Ten. - All forces 250 (lb) or less except when shown.
TOP CHORD 2-4=-3709/268, 4-6=-3013/298, 6-7=-2604/320, 7-9=-2503/311, 9-11=-2829/331, 11-13=-3314/273
BOT CHORD 2-24=-216/3217, 22-24=-216/3217, 20-22=-56/2654, 19-20=-44/2290, 18-19=-44/2290, 16-18=-44/2290, 15-16=-150/2868, 13-15=-150/2868
WEBS 4-24=0/301, 4-22=-747/194, 6-22=0/860, 7-22=-328/182, 7-20=-689/172, 20-25=-50/628, 9-25=-51/613, 9-26=-70/458, 16-26=-75/439, 11-16=-702/187, 11-15=0/322

NOTES-
1) Unbalanced roof live loads have been considered for this design.
2) Wind: ASCE 7-10; Vult=115mph Vasd=91mph; TCDL=6.0psf; BCDL=6.0psf; h=32ft; Cat. II; Exp B; Enclosed; MWFRS (envelope) gable end zone and C-C Exterior(2) -1-0-0 to 4-10-13, Interior(1) 4-10-13 to 20-0-0, Exterior(2) 20-0-0 to 28-4-2, Interior(1) 28-4-2 to 39-0-0, Exterior(2) 39-0-0 to 47-4-2, Interior(1) 47-4-2 to 60-0-0 zone; cantilever left and right exposed ; end vertical left and right exposed;C-C for members and forces & MWFRS for reactions shown; Lumber DOL=1.60 plate grip DOL=1.60
3) Provide adequate drainage to prevent water ponding.
4) All plates are MT20 plates unless otherwise indicated.
5) All plates are 5x8 MT20 unless otherwise indicated.
6) This truss has been designed for a 10.0 psf bottom chord live load nonconcurrent with any other live loads.
7) * This truss has been designed for a live load of 20.0psf on the bottom chord in all areas where a rectangle 3-6-0 tall by 2-0-0 wide will fit between the bottom chord and any other members, with BCDL = 10.0psf.
8) Provide mechanical connection (by others) of truss to bearing plate capable of withstanding 100 lb uplift at joint(s) except (jt=lb) 2=120, 13=128.
9) N/A

10) Graphical purlin representation does not depict the size or the orientation of the purlin along the top and/or bottom chord.
11) In the LOAD CASE(S) section, loads applied to the face of the truss are noted as front (F) or back (B).

April 1,2022

LOAD CASE(S) Standard

Continued on page 2

ENGINEERING BY TRENCO A MiTek Affiliate
818 Soundside Road
Edenton, NC 27932

LOAD CASE(S) Standard

1) Dead + Roof Live (balanced): Lumber Increase=1.15, Plate Increase=1.15
   Uniform Loads (plf)
   Vert: 1-6=-60, 6-9=-60, 9-14=-60, 29-33=-20
2) Dead + 0.75 Roof Live (balanced) + 0.75 Uninhab. Attic Storage: Lumber Increase=1.15, Plate Increase=1.15
   Uniform Loads (plf)
   Vert: 1-6=-50, 6-9=-50, 9-14=-50, 29-44=-20, 44-45=-50, 45-46=-20, 46-47=-50, 15-47=-20, 15-48=-50, 33-48=-20, 49-50=-30(F)
3) Dead + Uninhabitable Attic Without Storage: Lumber Increase=1.25, Plate Increase=1.25
   Uniform Loads (plf)
   Vert: 1-6=-20, 6-9=-20, 9-14=-20, 29-33=-40, 49-50=-40(F)
18) Dead + Uninhabitable Attic Storage: Lumber Increase=1.25, Plate Increase=1.25
   Uniform Loads (plf)
   Vert: 1-6=-20, 6-9=-20, 9-14=-20, 29-44=-20, 44-45=-60, 45-46=-20, 46-47=-60, 15-47=-20, 15-48=-60, 33-48=-20, 49-50=-40(F)
19) Dead + 0.75 Roof Live (bal.) + 0.75 Uninhab. Attic Storage + 0.75(0.6 MWFRS Wind (Neg. Int) Left): Lumber Increase=1.60, Plate Increase=1.60
   Uniform Loads (plf)
   Vert: 1-2=-46, 2-6=-50, 6-9=-34, 9-13=-43, 13-14=-39, 29-44=-20, 44-45=-50, 45-46=-20, 46-47=-50, 15-47=-20, 15-48=-50, 33-48=-20, 49-50=-30(F)
   Horz: 1-2=-4, 2-6=-0, 9-13=7, 13-14=11
20) Dead + 0.75 Roof Live (bal.) + 0.75 Uninhab. Attic Storage + 0.75(0.6 MWFRS Wind (Neg. Int) Right): Lumber Increase=1.60, Plate Increase=1.60
   Uniform Loads (plf)
   Vert: 1-2=-39, 2-6=-43, 6-9=-34, 9-13=-50, 13-14=-46, 29-44=-20, 44-45=-50, 45-46=-20, 46-47=-50, 15-47=-20, 15-48=-50, 33-48=-20, 49-50=-30(F)
   Horz: 1-2=-11, 2-6=-7, 9-13=0, 13-14=4
21) Dead + 0.75 Roof Live (bal.) + 0.75 Uninhab. Attic Storage + 0.75(0.6 MWFRS Wind (Neg. Int) 1st Parallel): Lumber Increase=1.60, Plate Increase=1.60
   Uniform Loads (plf)
   Vert: 1-2=-30, 2-6=-34, 6-40=-34, 9-40=-44, 9-13=-44, 13-14=-40, 29-44=-20, 44-45=-50, 45-46=-20, 46-47=-50, 15-47=-20, 15-48=-50, 33-48=-20, 49-50=-30(F)
   Horz: 1-2=-20, 2-6=-16, 9-13=6, 13-14=10
22) Dead + 0.75 Roof Live (bal.) + 0.75 Uninhab. Attic Storage + 0.75(0.6 MWFRS Wind (Neg. Int) 2nd Parallel): Lumber Increase=1.60, Plate Increase=1.60
   Uniform Loads (plf)
   Vert: 1-2=-40, 2-6=-44, 6-40=-44, 9-40=-34, 9-13=-34, 13-14=-30, 29-44=-20, 44-45=-50, 45-46=-20, 46-47=-50, 15-47=-20, 15-48=-50, 33-48=-20, 49-50=-30(F)
   Horz: 1-2=-10, 2-6=-6, 9-13=16, 13-14=20
25) 3rd Dead + 0.75 Roof Live (unbalanced) + 0.75 Uninhab. Attic Storage: Lumber Increase=1.15, Plate Increase=1.15
   Uniform Loads (plf)
   Vert: 1-6=-50, 6-9=-50, 9-14=-20, 29-44=-20, 44-45=-50, 45-46=-20, 46-47=-50, 15-47=-20, 15-48=-50, 33-48=-20, 49-50=-30(F)
26) 4th Dead + 0.75 Roof Live (unbalanced) + 0.75 Uninhab. Attic Storage: Lumber Increase=1.15, Plate Increase=1.15
   Uniform Loads (plf)
   Vert: 1-6=-20, 6-9=-50, 9-14=-50, 29-44=-20, 44-45=-50, 45-46=-20, 46-47=-50, 15-47=-20, 15-48=-50, 33-48=-20, 49-50=-30(F)

Job	Truss	Truss Type	Qty	Ply	Clearwater Farm
FARM	A08	HIP	1	1	I51100391 Job Reference (optional)

Builders FirstSource (Apex, NC), Apex, NC - 27523, 8.530 s Dec 6 2021 MiTek Industries, Inc. Thu Mar 31 10:15:18 2022 Page 1
ID:zbklr1dFypInNUy02maTGGyYVBm-xA_tRcbhkOZAoLkG7KtF1R4be22bUvDtqi9CXpzVRxt

-1-0-0	10-1-12	20-0-0	29-6-0	39-0-0	48-8-0	58-7-8
1-0-0	10-1-12	9-10-4	9-6-0	9-6-0	9-8-0	9-11-8

Scale = 1:102.1

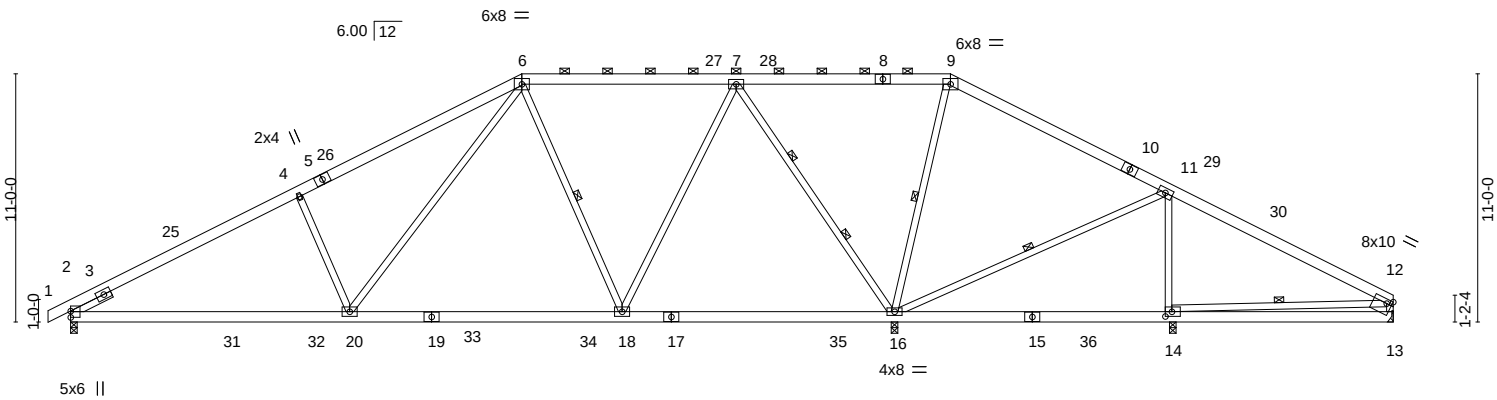

12-4-7	24-5-5	36-6-4	48-10-4	58-7-8
12-4-7	12-0-15	12-0-15	12-4-0	9-9-4

Plate Offsets (X,Y)-- [12:Edge,0-2-4], [14:0-3-8,0-2-8]

LOADING (psf)		SPACING- 2-0-0		CSI.		DEFL.	in	(loc)	l/defl	L/d	PLATES	GRIP
TCLL	20.0	Plate Grip DOL	1.15	TC	0.65	Vert(LL)	-0.19	18-20	>999	360	MT20	244/190
TCDL	10.0	Lumber DOL	1.15	BC	0.72	Vert(CT)	-0.31	18-20	>999	240		
BCLL	0.0 *	Rep Stress Incr	YES	WB	0.98	Horz(CT)	0.04	13	n/a	n/a		
BCDL	10.0	Code IRC2015/TPI2014		Matrix-MS		Wind(LL)	0.05	20-23	>999	240	Weight: 427 lb	FT = 20%

LUMBER-

TOP CHORD	2x6 SP No.2
BOT CHORD	2x6 SP No.2
WEBS	2x4 SP No.3 *Except* 6-20,7-16,11-16: 2x4 SP No.2
SLIDER	Left 2x4 SP No.3 1-11-12

BRACING-

TOP CHORD	Structural wood sheathing directly applied or 4-8-7 oc purlins, except end verticals, and 2-0-0 oc purlins (6-0-0 max.): 6-9.
BOT CHORD	Rigid ceiling directly applied or 10-0-0 oc bracing, Except: 6-0-0 oc bracing: 14-16.
WEBS	1 Row at midpt 6-18, 9-16, 11-16, 12-14 2 Rows at 1/3 pts 7-16

REACTIONS. All bearings 0-3-8 except (jt=length) 13=Mechanical.
(lb) - Max Horz 2=144(LC 16)
Max Uplift All uplift 100 lb or less at joint(s) 13, 16, 14 except 2=-101(LC 12)
Max Grav All reactions 250 lb or less at joint(s) except 13=312(LC 24), 2=1352(LC 25), 16=2757(LC 2), 14=636(LC 24)

FORCES. (lb) - Max. Comp./Max. Ten. - All forces 250 (lb) or less except when shown.
TOP CHORD 2-4=-2062/187, 4-6=-1901/258, 6-7=-782/175, 7-9=0/717, 9-11=-7/710, 11-12=-123/287
BOT CHORD 2-20=-193/1767, 18-20=-30/984, 16-18=-33/333, 13-14=-71/274
WEBS 4-20=-555/252, 6-20=-111/1046, 6-18=-591/171, 7-18=-15/1092, 7-16=-1820/185, 9-16=-752/114, 11-16=-452/133, 11-14=-379/213, 12-14=-340/113

NOTES-
1) Unbalanced roof live loads have been considered for this design.
2) Wind: ASCE 7-10; Vult=115mph Vasd=91mph; TCDL=6.0psf; BCDL=6.0psf; h=32ft; Cat. II; Exp B; Enclosed; MWFRS (envelope) gable end zone and C-C Exterior(2) -1-0-0 to 4-10-6, Interior(1) 4-10-6 to 20-0-0, Exterior(2) 20-0-0 to 28-3-8, Interior(1) 28-3-8 to 39-0-0, Exterior(2) 39-0-0 to 47-3-8, Interior(1) 47-3-8 to 58-5-12 zone; cantilever left and right exposed ; end vertical left and right exposed;C-C for members and forces & MWFRS for reactions shown; Lumber DOL=1.60 plate grip DOL=1.60
3) Provide adequate drainage to prevent water ponding.
4) All plates are 5x8 MT20 unless otherwise indicated.
5) This truss has been designed for a 10.0 psf bottom chord live load nonconcurrent with any other live loads.
6) * This truss has been designed for a live load of 20.0psf on the bottom chord in all areas where a rectangle 3-6-0 tall by 2-0-0 wide will fit between the bottom chord and any other members, with BCDL = 10.0psf.
7) Refer to girder(s) for truss to truss connections.
8) Provide mechanical connection (by others) of truss to bearing plate capable of withstanding 100 lb uplift at joint(s) 13, 16, 14 except (jt=lb) 2=101.
9) Graphical purlin representation does not depict the size or the orientation of the purlin along the top and/or bottom chord.

NORTH CAROLINA PROFESSIONAL SEAL 036322 ENGINEER ERIC A. GILBERT

April 1,2022

ENGINEERING BY TRENCO A MiTek Affiliate
818 Soundside Road
Edenton, NC 27932

Job	Truss	Truss Type	Qty	Ply	Clearwater Farm
FARM	A08H	HIP	1	1	I51100392 Job Reference (optional)

Builders FirstSource (Apex, NC), Apex, NC - 27523, 8.530 s Dec 6 2021 MiTek Industries, Inc. Thu Mar 31 10:15:20 2022 Page 1
ID:zbkIr1dFypInNUy02maTGGyYVBm-uZ6esIdxG?pu2fueFlvj7sAwlsl_ypd9H0eJbhzVRxr

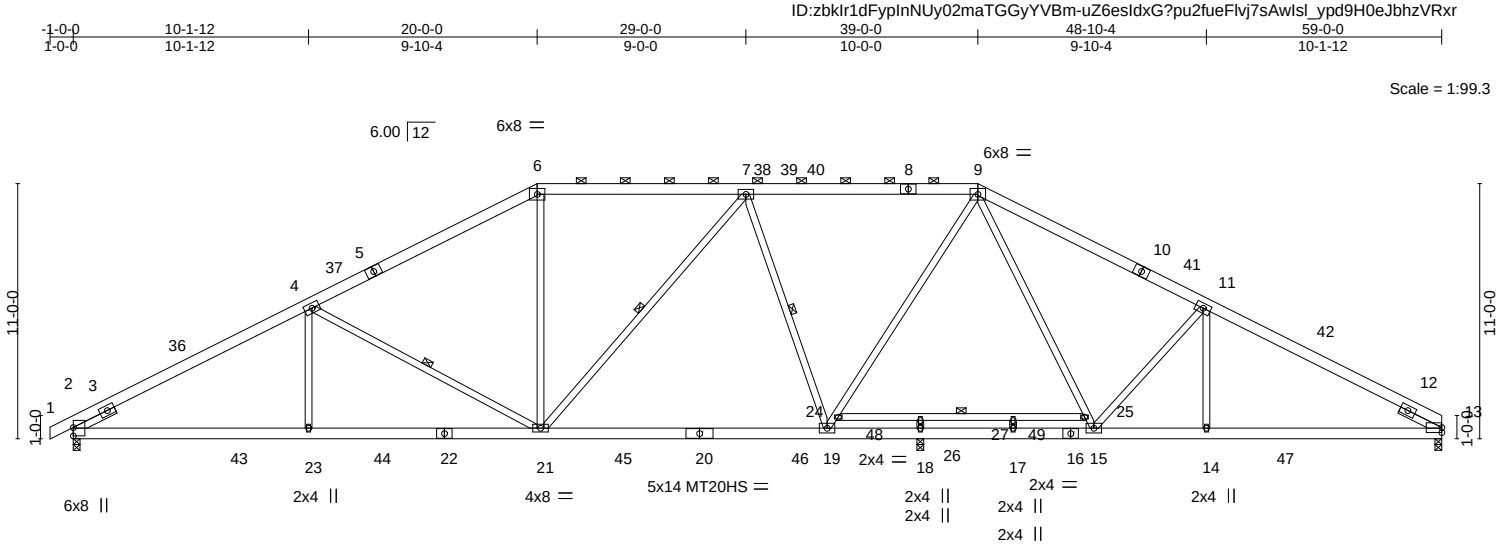

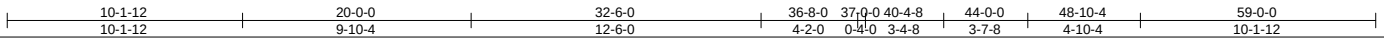

Plate Offsets (X,Y)-- [13:0-0-0,0-2-10]

LOADING (psf)		SPACING- 2-0-0		CSI.		DEFL.	in	(loc)	l/defl	L/d	PLATES	GRIP
TCLL	20.0	Plate Grip DOL	1.15	TC	0.71	Vert(LL)	-0.39	19-21	>999	360	MT20	244/190
TCDL	10.0	Lumber DOL	1.15	BC	0.66	Vert(CT)	-0.71	19-21	>616	240	MT20HS	187/143
BCLL	0.0 *	Rep Stress Incr	NO	WB	0.98	Horz(CT)	0.13	13	n/a	n/a		
BCDL	10.0	Code IRC2015/TPI2014		Matrix-MS		Wind(LL)	0.15	19-21	>999	240	Weight: 441 lb	FT = 20%

LUMBER-
TOP CHORD 2x6 SP DSS *Except* 6-8,8-9,10-13: 2x6 SP No.2
BOT CHORD 2x6 SP DSS
WEBS 2x4 SP No.3 *Except* 7-21: 2x4 SP No.2
SLIDER Left 2x4 SP No.3 1-11-12, Right 2x4 SP No.3 1-11-12

BRACING-
TOP CHORD Structural wood sheathing directly applied or 3-2-6 oc purlins, except 2-0-0 oc purlins (4-0-10 max.): 6-9.
BOT CHORD Rigid ceiling directly applied or 10-0-0 oc bracing.
WEBS 1 Row at midpt 4-21, 7-21, 7-19, 24-25

REACTIONS. (size) 2=0-3-8, 18=0-3-8, 13=0-3-8
Max Horz 2=147(LC 12)
Max Uplift 2=-120(LC 12), 13=-113(LC 13)
Max Grav 2=2164(LC 2), 18=863(LC 3), 13=1915(LC 1)

FORCES. (lb) - Max. Comp./Max. Ten. - All forces 250 (lb) or less except when shown.
TOP CHORD 2-4=-3692/269, 4-6=-2996/299, 6-7=-2588/321, 7-9=-2475/309, 9-11=-2798/326, 11-13=-3284/268
BOT CHORD 2-23=-222/3202, 21-23=-222/3202, 19-21=-80/2630, 18-19=-51/2264, 17-18=-51/2264, 15-17=-51/2264, 14-15=-155/2843, 13-14=-155/2843
WEBS 4-23=0/301, 4-21=-747/194, 6-21=0/852, 7-21=-316/182, 7-19=-698/172, 19-24=-50/624, 9-24=-51/606, 9-25=-67/452, 15-25=-73/434, 11-15=-706/187, 18-26=-252/0, 11-14=0/322

NOTES-
1) Unbalanced roof live loads have been considered for this design.
2) Wind: ASCE 7-10; Vult=115mph Vasd=91mph; TCDL=6.0psf; BCDL=6.0psf; h=32ft; Cat. II; Exp B; Enclosed; MWFRS (envelope) gable end zone and C-C Exterior(2) -1-0-0 to 4-10-13, Interior(1) 4-10-13 to 20-0-0, Exterior(2) 20-0-0 to 28-4-2, Interior(1) 28-4-2 to 39-0-0, Exterior(2) 39-0-0 to 47-4-2, Interior(1) 47-4-2 to 59-0-0 zone; cantilever left and right exposed ; end vertical left and right exposed;C-C for members and forces & MWFRS for reactions shown; Lumber DOL=1.60 plate grip DOL=1.60
3) Provide adequate drainage to prevent water ponding.
4) All plates are MT20 plates unless otherwise indicated.
5) All plates are 5x8 MT20 unless otherwise indicated.
6) This truss has been designed for a 10.0 psf bottom chord live load nonconcurrent with any other live loads.
7) * This truss has been designed for a live load of 20.0psf on the bottom chord in all areas where a rectangle 3-6-0 tall by 2-0-0 wide will fit between the bottom chord and any other members, with BCDL = 10.0psf.
8) Provide mechanical connection (by others) of truss to bearing plate capable of withstanding 100 lb uplift at joint(s) except (jt=lb) 2=120, 13=113.
9) N/A

10) Graphical purlin representation does not depict the size or the orientation of the purlin along the top and/or bottom chord.
11) In the LOAD CASE(S) section, loads applied to the face of the truss are noted as front (F) or back (B).

April 1,2022

LOAD CASE(S) Standard
Continued on page 2

ENGINEERING BY TRENCO A MiTek Affiliate
818 Soundside Road
Edenton, NC 27932

LOAD CASE(S) Standard

1) Dead + Roof Live (balanced): Lumber Increase=1.15, Plate Increase=1.15
   Uniform Loads (plf)
   Vert: 1-6=-60, 6-9=-60, 9-13=-60, 28-32=-20
2) Dead + 0.75 Roof Live (balanced) + 0.75 Uninhab. Attic Storage: Lumber Increase=1.15, Plate Increase=1.15
   Uniform Loads (plf)
   Vert: 1-6=-50, 6-9=-50, 9-13=-50, 28-43=-20, 43-44=-50, 44-45=-20, 45-46=-50, 14-46=-20, 14-47=-50, 32-47=-20, 48-49=-30(F)
3) Dead + Uninhabitable Attic Without Storage: Lumber Increase=1.25, Plate Increase=1.25
   Uniform Loads (plf)
   Vert: 1-6=-20, 6-9=-20, 9-13=-20, 28-32=-40, 48-49=-40(F)
18) Dead + Uninhabitable Attic Storage: Lumber Increase=1.25, Plate Increase=1.25
   Uniform Loads (plf)
   Vert: 1-6=-20, 6-9=-20, 9-13=-20, 28-43=-20, 43-44=-60, 44-45=-20, 45-46=-60, 14-46=-20, 14-47=-60, 32-47=-20, 48-49=-40(F)
19) Dead + 0.75 Roof Live (bal.) + 0.75 Uninhab. Attic Storage + 0.75(0.6 MWFRS Wind (Neg. Int) Left): Lumber Increase=1.60, Plate Increase=1.60
   Uniform Loads (plf)
   Vert: 1-2=-46, 2-6=-50, 6-9=-34, 9-13=-43, 28-43=-20, 43-44=-50, 44-45=-20, 45-46=-50, 14-46=-20, 14-47=-50, 32-47=-20, 48-49=-30(F)
   Horz: 1-2=-4, 2-6=-0, 9-13=7
20) Dead + 0.75 Roof Live (bal.) + 0.75 Uninhab. Attic Storage + 0.75(0.6 MWFRS Wind (Neg. Int) Right): Lumber Increase=1.60, Plate Increase=1.60
   Uniform Loads (plf)
   Vert: 1-2=-39, 2-6=-43, 6-9=-34, 9-13=-50, 28-43=-20, 43-44=-50, 44-45=-20, 45-46=-50, 14-46=-20, 14-47=-50, 32-47=-20, 48-49=-30(F)
   Horz: 1-2=-11, 2-6=-7, 9-13=0
21) Dead + 0.75 Roof Live (bal.) + 0.75 Uninhab. Attic Storage + 0.75(0.6 MWFRS Wind (Neg. Int) 1st Parallel): Lumber Increase=1.60, Plate Increase=1.60
   Uniform Loads (plf)
   Vert: 1-2=-30, 2-6=-34, 6-39=-34, 9-39=-44, 9-13=-44, 28-43=-20, 43-44=-50, 44-45=-20, 45-46=-50, 14-46=-20, 14-47=-50, 32-47=-20, 48-49=-30(F)
   Horz: 1-2=-20, 2-6=-16, 9-13=6
22) Dead + 0.75 Roof Live (bal.) + 0.75 Uninhab. Attic Storage + 0.75(0.6 MWFRS Wind (Neg. Int) 2nd Parallel): Lumber Increase=1.60, Plate Increase=1.60
   Uniform Loads (plf)
   Vert: 1-2=-40, 2-6=-44, 6-39=-44, 9-39=-34, 9-13=-34, 28-43=-20, 43-44=-50, 44-45=-20, 45-46=-50, 14-46=-20, 14-47=-50, 32-47=-20, 48-49=-30(F)
   Horz: 1-2=-10, 2-6=-6, 9-13=16
25) 3rd Dead + 0.75 Roof Live (unbalanced) + 0.75 Uninhab. Attic Storage: Lumber Increase=1.15, Plate Increase=1.15
   Uniform Loads (plf)
   Vert: 1-6=-50, 6-9=-50, 9-13=-20, 28-43=-20, 43-44=-50, 44-45=-20, 45-46=-50, 14-46=-20, 14-47=-50, 32-47=-20, 48-49=-30(F)
26) 4th Dead + 0.75 Roof Live (unbalanced) + 0.75 Uninhab. Attic Storage: Lumber Increase=1.15, Plate Increase=1.15
   Uniform Loads (plf)
   Vert: 1-6=-20, 6-9=-50, 9-13=-50, 28-43=-20, 43-44=-50, 44-45=-20, 45-46=-50, 14-46=-20, 14-47=-50, 32-47=-20, 48-49=-30(F)

Job	Truss	Truss Type	Qty	Ply	Clearwater Farm
FARM	A09	HIP	1	1	I51100393 Job Reference (optional)

Builders FirstSource (Apex, NC), Apex, NC - 27523, 8.530 s Dec 6 2021 MiTek Industries, Inc. Thu Mar 31 10:15:21 2022 Page 1
ID:zbkIr1dFypInNUy02maTGGyYVBm-Mlg03edZ0JxlfoTrpTQyf3i6vF3IhGyJWgOs77zVRxq

10-1-12	20-0-0	29-6-0	39-0-0	48-8-0	58-7-8
10-1-12	9-10-4	9-6-0	9-6-0	9-8-0	9-11-8

Scale = 1:101.7

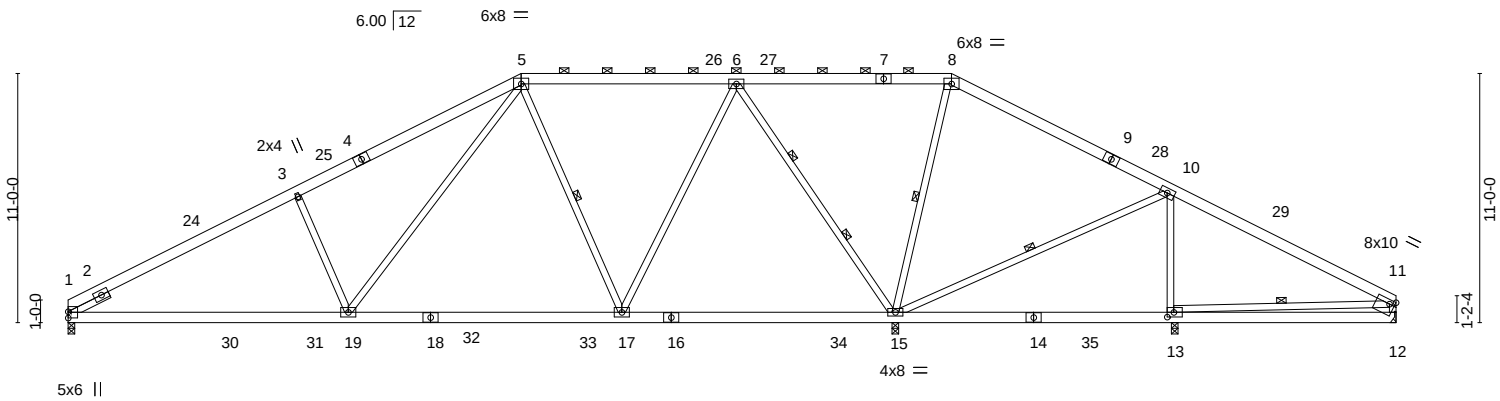

12-4-7	24-5-5	36-6-4	48-10-4	58-7-8
12-4-7	12-0-15	12-0-15	12-4-0	9-9-4

Plate Offsets (X,Y)-- [11:Edge,0-2-4], [13:0-3-8,0-2-8]

LOADING (psf)		SPACING- 2-0-0		CSI.		DEFL.	in	(loc)	l/defl	L/d	PLATES	GRIP
TCLL	20.0	Plate Grip DOL	1.15	TC	0.65	Vert(LL)	-0.19	17-19	>999	360	MT20	244/190
TCDL	10.0	Lumber DOL	1.15	BC	0.72	Vert(CT)	-0.31	17-19	>999	240		
BCLL	0.0 *	Rep Stress Incr	YES	WB	0.98	Horz(CT)	0.04	12	n/a	n/a		
BCDL	10.0	Code IRC2015/TPI2014		Matrix-MS		Wind(LL)	0.05	19-22	>999	240	Weight: 425 lb	FT = 20%

LUMBER-
TOP CHORD 2x6 SP No.2
BOT CHORD 2x6 SP No.2
WEBS 2x4 SP No.3 *Except*
5-19,6-15,10-15: 2x4 SP No.2
SLIDER Left 2x4 SP No.3 1-11-12

BRACING-
TOP CHORD Structural wood sheathing directly applied or 4-8-4 oc purlins, except end verticals, and 2-0-0 oc purlins (6-0-0 max.): 5-8.
BOT CHORD Rigid ceiling directly applied or 10-0-0 oc bracing, Except: 6-0-0 oc bracing: 13-15.
WEBS 1 Row at midpt 5-17, 8-15, 10-15, 11-13
2 Rows at 1/3 pts 6-15

REACTIONS. All bearings 0-3-8 except (jt=length) 12=Mechanical.
(lb) - Max Horz 1=131(LC 16)
Max Uplift All uplift 100 lb or less at joint(s) 12, 1, 15, 13
Max Grav All reactions 250 lb or less at joint(s) except 12=312(LC 24), 1=1301(LC 25), 15=2757(LC 2), 13=636(LC 24)

FORCES. (lb) - Max. Comp./Max. Ten. - All forces 250 (lb) or less except when shown.
TOP CHORD 1-3=-2067/188, 3-5=-1906/259, 5-6=-784/181, 6-8=0/716, 8-10=-8/709, 10-11=-123/286
BOT CHORD 1-19=-193/1772, 17-19=-30/986, 15-17=-32/335, 12-13=-71/274
WEBS 3-19=-557/252, 5-19=-112/1050, 5-17=-592/172, 6-17=-15/1093, 6-15=-1820/186, 8-15=-752/115, 10-15=-452/133, 10-13=-378/212, 11-13=-340/114

NOTES-
1) Unbalanced roof live loads have been considered for this design.
2) Wind: ASCE 7-10; Vult=115mph Vasd=91mph; TCDL=6.0psf; BCDL=6.0psf; h=32ft; Cat. II; Exp B; Enclosed; MWFRS (envelope) gable end zone and C-C Exterior(2) 0-0-0 to 5-10-6, Interior(1) 5-10-6 to 20-0-0, Exterior(2) 20-0-0 to 28-3-8, Interior(1) 28-3-8 to 39-0-0, Exterior(2) 39-0-0 to 47-3-8, Interior(1) 47-3-8 to 58-5-12 zone; cantilever left and right exposed ; end vertical left and right exposed;C-C for members and forces & MWFRS for reactions shown; Lumber DOL=1.60 plate grip DOL=1.60
3) Provide adequate drainage to prevent water ponding.
4) All plates are 5x8 MT20 unless otherwise indicated.
5) This truss has been designed for a 10.0 psf bottom chord live load nonconcurrent with any other live loads.
6) * This truss has been designed for a live load of 20.0psf on the bottom chord in all areas where a rectangle 3-6-0 tall by 2-0-0 wide will fit between the bottom chord and any other members, with BCDL = 10.0psf.
7) Refer to girder(s) for truss to truss connections.
8) Provide mechanical connection (by others) of truss to bearing plate capable of withstanding 100 lb uplift at joint(s) 12, 1, 15, 13.
9) Graphical purlin representation does not depict the size or the orientation of the purlin along the top and/or bottom chord.

NORTH CAROLINA PROFESSIONAL SEAL 036322 ENGINEER ERIC A. GILBERT

April 1,2022

ENGINEERING BY TRENCO A MiTek Affiliate
818 Soundside Road
Edenton, NC 27932

Job	Truss	Truss Type	Qty	Ply	Clearwater Farm
FARM	A10	HIP	1	1	I51100394 Job Reference (optional)

Builders FirstSource (Apex, NC), Apex, NC - 27523, 8.530 s Dec 6 2021 MiTek Industries, Inc. Thu Mar 31 10:15:22 2022 Page 1
ID:zbkIr1dFypInNUy02maTGGyYVBm-qyEOH_eBnc3cHy21MAyBCHFH?fPfQjmSlK7QgazVRxp

-1-0-0	10-1-12	20-0-0	29-6-0	39-0-0	48-8-0	58-7-8
1-0-0	10-1-12	9-10-4	9-6-0	9-6-0	9-8-0	9-11-8

Scale = 1:102.3

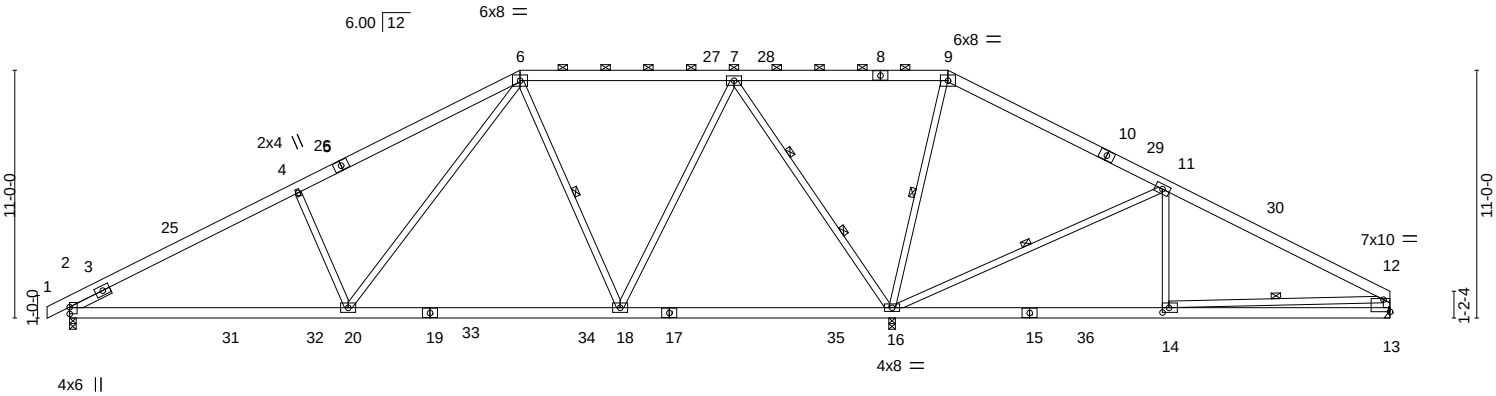

12-4-7	24-5-5	36-6-4	48-8-0	58-7-8
12-4-7	12-0-15	12-0-15	12-1-12	9-11-8

Plate Offsets (X,Y)-- [12:Edge,0-6-8], [14:0-3-8,0-2-8]

LOADING (psf)		SPACING- 2-0-0		CSI.		DEFL.	in	(loc)	l/defl	L/d	PLATES	GRIP
TCLL	20.0	Plate Grip DOL	1.15	TC	0.70	Vert(LL)	-0.19	18-20	>999	360	MT20	244/190
TCDL	10.0	Lumber DOL	1.15	BC	0.71	Vert(CT)	-0.31	18-20	>999	240		
BCLL	0.0 *	Rep Stress Incr	YES	WB	1.00	Horz(CT)	0.04	13	n/a	n/a		
BCDL	10.0	Code IRC2015/TPI2014		Matrix-MS		Wind(LL)	0.05	20-23	>999	240	Weight: 427 lb	FT = 20%

LUMBER-

TOP CHORD	2x6 SP No.2
BOT CHORD	2x6 SP No.2
WEBS	2x4 SP No.3 *Except* 6-20,7-16,11-16: 2x4 SP No.2
SLIDER	Left 2x4 SP No.3 1-11-12

BRACING-

TOP CHORD	Structural wood sheathing directly applied or 4-9-6 oc purlins, except end verticals, and 2-0-0 oc purlins (6-0-0 max.): 6-9.
BOT CHORD	Rigid ceiling directly applied or 10-0-0 oc bracing, Except: 6-0-0 oc bracing: 14-16.
WEBS	1 Row at midpt 6-18, 9-16, 11-16, 12-14 2 Rows at 1/3 pts 7-16

REACTIONS. (size) 13=Mechanical, 2=0-3-8, 16=0-3-8 (req. 0-3-11)
Max Horz 2=144(LC 16)
Max Uplift 13=-81(LC 13), 2=-110(LC 12), 16=-11(LC 13)
Max Grav 13=563(LC 24), 2=1330(LC 25), 16=3118(LC 2)

FORCES. (lb) - Max. Comp./Max. Ten. - All forces 250 (lb) or less except when shown.

TOP CHORD	2-4=-2019/205, 4-6=-1857/276, 6-7=-732/167, 7-9=0/871, 9-11=0/864, 11-12=-600/145, 12-13=-479/128
BOT CHORD	2-20=-209/1729, 18-20=-47/943, 16-18=-76/277, 14-16=-57/435, 13-14=-69/330
WEBS	4-20=-559/251, 6-20=-110/1054, 6-18=-650/162, 7-18=-5/1146, 7-16=-1873/183, 9-16=-840/120, 11-16=-1019/177, 11-14=0/468

NOTES-

1) Unbalanced roof live loads have been considered for this design.
2) Wind: ASCE 7-10; Vult=115mph Vasd=91mph; TCDL=6.0psf; BCDL=6.0psf; h=32ft; Cat. II; Exp B; Enclosed; MWFRS (envelope) gable end zone and C-C Exterior(2) -1-0-0 to 4-10-6, Interior(1) 4-10-6 to 20-0-0, Exterior(2) 20-0-0 to 28-3-8, Interior(1) 28-3-8 to 39-0-0, Exterior(2) 39-0-0 to 47-3-8, Interior(1) 47-3-8 to 58-5-12 zone; cantilever left and right exposed ; end vertical left and right exposed;C-C for members and forces & MWFRS for reactions shown; Lumber DOL=1.60 plate grip DOL=1.60
3) Provide adequate drainage to prevent water ponding.
4) All plates are 5x8 MT20 unless otherwise indicated.
5) This truss has been designed for a 10.0 psf bottom chord live load nonconcurrent with any other live loads.
6) * This truss has been designed for a live load of 20.0psf on the bottom chord in all areas where a rectangle 3-6-0 tall by 2-0-0 wide will fit between the bottom chord and any other members, with BCDL = 10.0psf.
7) WARNING: Required bearing size at joint(s) 16 greater than input bearing size.
8) Refer to girder(s) for truss to truss connections.
9) Provide mechanical connection (by others) of truss to bearing plate capable of withstanding 100 lb uplift at joint(s) 13, 16 except (jt=lb) 2=110.
10) Graphical purlin representation does not depict the size or the orientation of the purlin along the top and/or bottom chord.

NORTH CAROLINA PROFESSIONAL SEAL 036322 ENGINEER ERIC A. GILBERT

April 1,2022

ENGINEERING BY TRENCO A MiTek Affiliate
818 Soundside Road
Edenton, NC 27932

Job	Truss	Truss Type	Qty	Ply	Clearwater Farm
FARM	A10G	GABLE	1	1	I51100395 Job Reference (optional)

Builders FirstSource (Apex, NC), Apex, NC - 27523, 8.530 s Dec 6 2021 MiTek Industries, Inc. Thu Mar 31 10:15:26 2022 Page 1
ID:zbkIr1dFypInNUy02maTGGyYVBm-ijTv6LhirrZ2maMob007M7Q5XGy_MjE2gy5dpLzVRxl

-1-0-0 20-0-0 39-0-0 58-7-8
1-0-0 20-0-0 19-0-0 19-7-8

Scale = 1:102.7

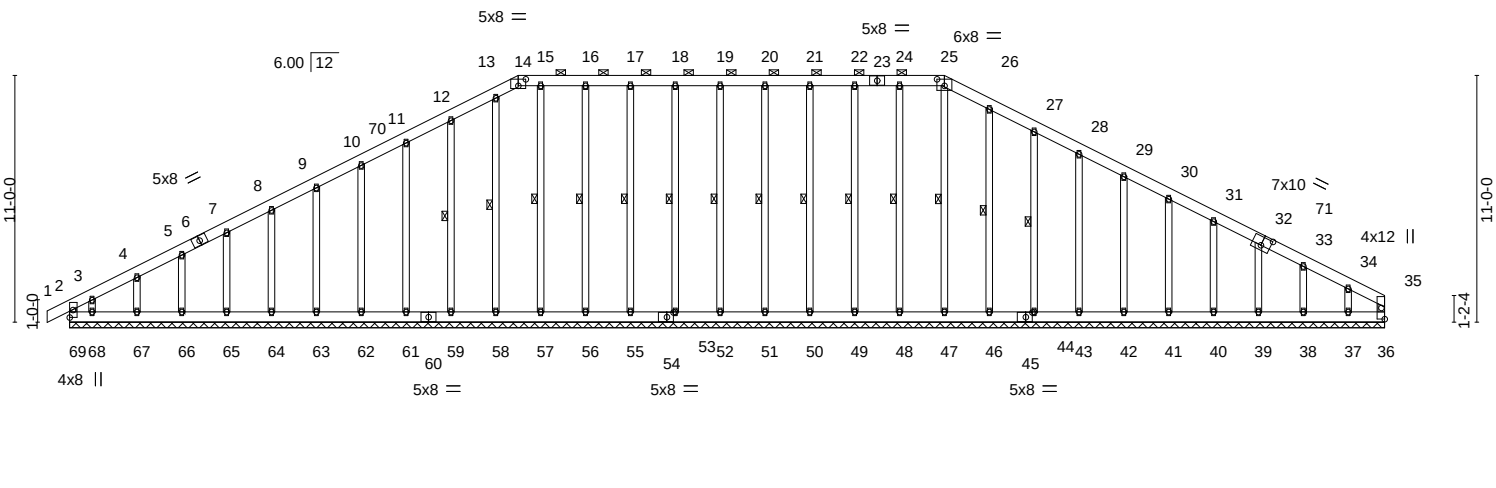

Plate Offsets (X,Y)-- [14:0-4-0,0-3-8], [25:0-4-0,0-3-8], [32:0-5-0,0-4-8], [45:0-3-8,0-2-8], [54:0-3-8,0-2-8]

LOADING (psf)		SPACING- 2-0-0		CSI.		DEFL.	in	(loc)	l/defl	L/d	PLATES	GRIP
TCLL	20.0	Plate Grip DOL	1.15	TC	0.15	Vert(LL)	0.00	1	n/r	120	MT20	244/190
TCDL	10.0	Lumber DOL	1.15	BC	0.05	Vert(CT)	-0.00	1	n/r	120		
BCLL	0.0 *	Rep Stress Incr	NO	WB	0.14	Horz(CT)	0.01	36	n/a	n/a		
BCDL	10.0	Code IRC2015/TPI2014		Matrix-R							Weight: 583 lb	FT = 20%

LUMBER-
TOP CHORD 2x6 SP No.2
BOT CHORD 2x6 SP No.2
WEBS 2x4 SP No.3
OTHERS 2x4 SP No.3

BRACING-
TOP CHORD Structural wood sheathing directly applied or 6-0-0 oc purlins, except end verticals, and 2-0-0 oc purlins (6-0-0 max.): 14-25.
BOT CHORD Rigid ceiling directly applied or 10-0-0 oc bracing.
WEBS 1 Row at midpt 25-47, 24-48, 22-49, 21-50, 20-51, 19-52, 18-53, 17-55, 16-56, 15-57, 13-58, 12-59, 26-46, 27-44

REACTIONS. All bearings 58-7-8.
(lb) - Max Horz 69=133(LC 16)
Max Uplift All uplift 100 lb or less at joint(s) 69, 48, 49, 50, 51, 52, 53, 55, 56, 59, 61, 62, 63, 64, 65, 66, 67, 46, 44, 43, 42, 41, 40, 39, 38, 37 except 68=-140(LC 12)
Max Grav All reactions 250 lb or less at joint(s) 69, 36, 47, 48, 49, 50, 51, 52, 53, 55, 56, 57, 58, 59, 61, 62, 63, 64, 65, 66, 67, 68, 46, 44, 43, 42, 41, 40, 39, 38, 37

FORCES. (lb) - Max. Comp./Max. Ten. - All forces 250 (lb) or less except when shown.
TOP CHORD 11-12=-88/257, 12-13=-102/298, 13-14=-104/294, 14-15=-94/293, 15-16=-94/293, 16-17=-94/293, 17-18=-94/293, 18-19=-94/293, 19-20=-94/293, 20-21=-94/293, 21-22=-94/293, 22-24=-94/293, 24-25=-94/293, 25-26=-107/299, 26-27=-95/266

NOTES-
1) Unbalanced roof live loads have been considered for this design.
2) Wind: ASCE 7-10; Vult=115mph Vasd=91mph; TCDL=6.0psf; BCDL=6.0psf; h=32ft; Cat. II; Exp B; Enclosed; MWFRS (envelope) gable end zone and C-C Corner(3) -1-0-0 to 5-0-0, Exterior(2) 5-0-0 to 20-0-0, Corner(3) 20-0-0 to 25-10-6, Exterior(2) 25-10-6 to 39-0-0, Corner(3) 39-0-0 to 45-0-0, Exterior(2) 45-0-0 to 58-5-12 zone; cantilever left and right exposed ; end vertical left and right exposed;C-C for members and forces & MWFRS for reactions shown; Lumber DOL=1.60 plate grip DOL=1.60
3) Truss designed for wind loads in the plane of the truss only. For studs exposed to wind (normal to the face), see Standard Industry Gable End Details as applicable, or consult qualified building designer as per ANSI/TPI 1.
4) Provide adequate drainage to prevent water ponding.
5) All plates are 2x4 MT20 unless otherwise indicated.
6) Gable requires continuous bottom chord bearing.
7) Truss to be fully sheathed from one face or securely braced against lateral movement (i.e. diagonal web).
8) Gable studs spaced at 2-0-0 oc.
9) This truss has been designed for a 10.0 psf bottom chord live load nonconcurrent with any other live loads.
10) * This truss has been designed for a live load of 20.0psf on the bottom chord in all areas where a rectangle 3-6-0 tall by 2-0-0 wide will fit between the bottom chord and any other members.
11) Provide mechanical connection (by others) of truss to bearing plate capable of withstanding 100 lb uplift at joint(s) 69, 48, 49, 50, 51, 52, 53, 55, 56, 59, 61, 62, 63, 64, 65, 66, 67, 46, 44, 43, 42, 41, 40, 39, 38, 37 except (jt=lb) 68=140.
12) Graphical purlin representation does not depict the size or the orientation of the purlin along the top and/or bottom chord.

NORTH CAROLINA PROFESSIONAL SEAL 036322 ENGINEER ERIC A. GILBERT

April 1,2022

ENGINEERING BY TRENCO A MiTek Affiliate
818 Soundside Road
Edenton, NC 27932

Job	Truss	Truss Type	Qty	Ply	Clearwater Farm
FARM	A11	MONO HIP	1	1	I51100396 Job Reference (optional)

Builders FirstSource (Apex, NC), Apex, NC - 27523, 8.530 s Dec 6 2021 MiTek Industries, Inc. Thu Mar 31 10:15:27 2022 Page 1
ID:zbkIr1dFypInNUy02maTGGyYVBm-Av1HKhiKc9huNjw_9jXMvKy9Ug6750pBucrBLnzVRxk

6-10-5	13-5-3	20-0-0	28-2-4	36-8-0
6-10-5	6-6-13	6-6-13	8-2-4	8-5-12

Scale = 1:71.1

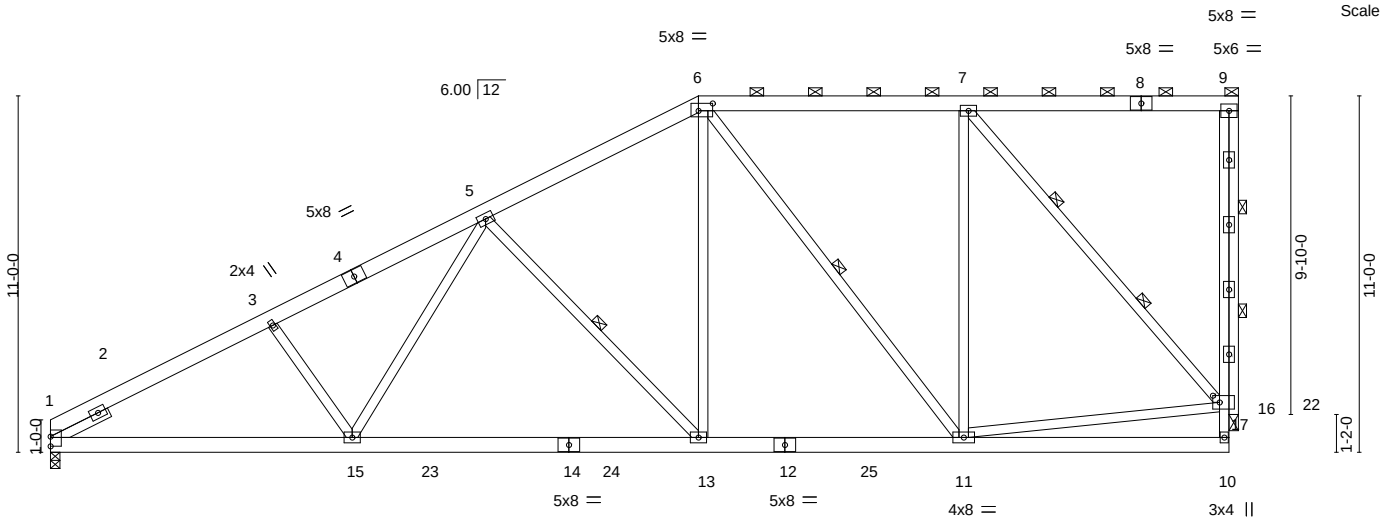

9-3-12	20-0-0	28-2-4	36-8-0
9-3-12	10-8-4	8-2-4	8-5-12

Plate Offsets (X,Y)-- [6:0-5-4,0-2-12], [16:0-2-8,0-2-8]

LOADING (psf)		SPACING- 2-0-0		CSI.		DEFL.	in	(loc)	l/defl	L/d	PLATES	GRIP
TCLL	20.0	Plate Grip DOL	1.15	TC	0.58	Vert(LL)	-0.18	13-15	>999	360	MT20	244/190
TCDL	10.0	Lumber DOL	1.15	BC	0.76	Vert(CT)	-0.35	13-15	>999	240		
BCLL	0.0 *	Rep Stress Incr	NO	WB	0.82	Horz(CT)	0.05	22	n/a	n/a		
BCDL	10.0	Code IRC2015/TPI2014		Matrix-MS		Wind(LL)	0.07	13-15	>999	240	Weight: 319 lb	FT = 20%

LUMBER-
TOP CHORD 2x6 SP No.2
BOT CHORD 2x6 SP No.2
WEBS 2x4 SP No.3
SLIDER Left 2x4 SP No.2 1-11-12

BRACING-
TOP CHORD Structural wood sheathing directly applied or 3-10-11 oc purlins, except end verticals, and 2-0-0 oc purlins (6-0-0 max.): 6-9.
BOT CHORD Rigid ceiling directly applied or 10-0-0 oc bracing.
WEBS 1 Row at midpt 5-13, 6-11
2 Rows at 1/3 pts 7-16, 9-22

REACTIONS. (size) 1=0-3-8, 22=0-3-8
Max Horz 1=326(LC 7)
Max Uplift 1=-88(LC 8), 22=-105(LC 5)
Max Grav 1=1461(LC 1), 22=1438(LC 1)

FORCES. (lb) - Max. Comp./Max. Ten. - All forces 250 (lb) or less except when shown.
TOP CHORD 1-3=-2415/179, 3-5=-2255/196, 5-6=-1568/182, 6-7=-947/141, 9-16=-47/1238
BOT CHORD 1-15=-240/2073, 13-15=-161/1753, 11-13=-139/1339
WEBS 5-15=-1/491, 5-13=-669/175, 6-13=-13/860, 6-11=-658/89, 7-11=0/584, 7-16=-1374/118, 11-16=-222/883, 9-22=-1438/105

NOTES-
1) Unbalanced roof live loads have been considered for this design.
2) Wind: ASCE 7-10; Vult=115mph Vasd=91mph; TCDL=6.0psf; BCDL=6.0psf; h=32ft; Cat. II; Exp B; Enclosed; MWFRS (envelope) gable end zone; cantilever left and right exposed ; end vertical left and right exposed; Lumber DOL=1.60 plate grip DOL=1.60
3) Provide adequate drainage to prevent water ponding.
4) All plates are 4x6 MT20 unless otherwise indicated.
5) This truss has been designed for a 10.0 psf bottom chord live load nonconcurrent with any other live loads.
6) * This truss has been designed for a live load of 20.0psf on the bottom chord in all areas where a rectangle 3-6-0 tall by 2-0-0 wide will fit between the bottom chord and any other members, with BCDL = 10.0psf.
7) Bearing at joint(s) 22 considers parallel to grain value using ANSI/TPI 1 angle to grain formula. Building designer should verify capacity of bearing surface.
8) Provide mechanical connection (by others) of truss to bearing plate capable of withstanding 100 lb uplift at joint(s) 1 except (jt=lb) 22=105.
9) Graphical purlin representation does not depict the size or the orientation of the purlin along the top and/or bottom chord.

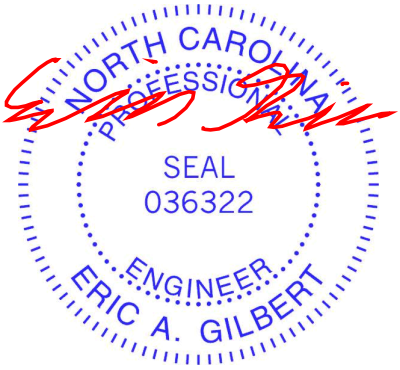

April 1,2022

ENGINEERING BY TRENCO A MiTek Affiliate
818 Soundside Road
Edenton, NC 27932

Job	Truss	Truss Type	Qty	Ply	Clearwater Farm
FARM	A12	SPECIAL	1	1	I51100397 Job Reference (optional)

Builders FirstSource (Apex, NC), Apex, NC - 27523, 8.530 s Dec 6 2021 MiTek Industries, Inc. Thu Mar 31 10:15:28 2022 Page 1
ID:zbkIr1dFypInNUy02maTGGyYVBm-f6bfX1jyNSpl?tVBjR2bRYVJg4StqaQL7GaktDzVRxj

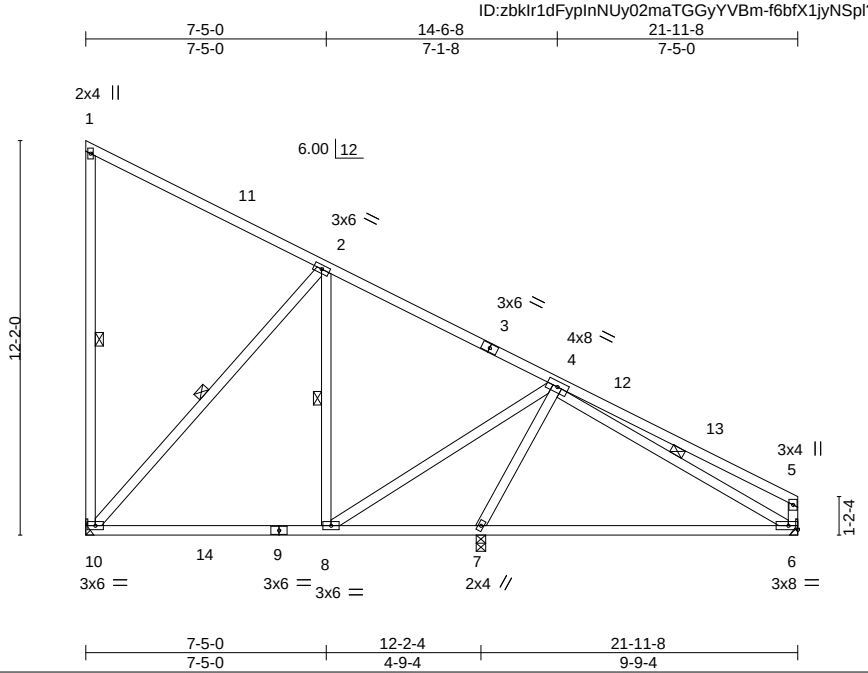

LOADING (psf)		SPACING-	2-0-0	CSI.		DEFL.	in	(loc)	l/defl	L/d	PLATES	GRIP
TCLL	20.0	Plate Grip DOL	1.15	TC	0.68	Vert(LL)	-0.23	6-7	>503	360	MT20	244/190
TCDL	10.0	Lumber DOL	1.15	BC	0.72	Vert(CT)	-0.46	6-7	>253	240		
BCLL	0.0 *	Rep Stress Incr	YES	WB	0.35	Horz(CT)	0.01	6	n/a	n/a		
BCDL	10.0	Code IRC2015/TPI2014		Matrix-MS		Wind(LL)	0.00	8	>999	240	Weight: 147 lb	FT = 20%

LUMBER-
TOP CHORD 2x4 SP No.2
BOT CHORD 2x4 SP No.2
WEBS 2x4 SP No.3

BRACING-
TOP CHORD Structural wood sheathing directly applied or 6-0-0 oc purlins, except end verticals.
BOT CHORD Rigid ceiling directly applied or 6-0-0 oc bracing.
WEBS 1 Row at midpt 1-10, 2-10, 2-8, 4-6

REACTIONS. (size) 10=Mechanical, 6=Mechanical, 7=0-3-8
Max Horz 10=-250(LC 13)
Max Uplift 10=-88(LC 13)
Max Grav 10=533(LC 20), 6=453(LC 1), 7=750(LC 1)

FORCES. (lb) - Max. Comp./Max. Ten. - All forces 250 (lb) or less except when shown.
TOP CHORD 2-4=-383/0, 4-5=-344/80, 5-6=-312/90
BOT CHORD 8-10=0/313, 6-7=0/306
WEBS 2-10=-391/158, 4-8=0/369, 4-7=-660/25

NOTES-
1) Wind: ASCE 7-10; Vult=115mph Vasd=91mph; TCDL=6.0psf; BCDL=6.0psf; h=32ft; Cat. II; Exp B; Enclosed; MWFRS (envelope) gable end zone and C-C Exterior(2) 0-1-12 to 4-4-11, Interior(1) 4-4-11 to 21-9-12 zone; cantilever left and right exposed ; end vertical right exposed;C-C for members and forces & MWFRS for reactions shown; Lumber DOL=1.60 plate grip DOL=1.60
2) This truss has been designed for a 10.0 psf bottom chord live load nonconcurrent with any other live loads.
3) * This truss has been designed for a live load of 20.0psf on the bottom chord in all areas where a rectangle 3-6-0 tall by 2-0-0 wide will fit between the bottom chord and any other members, with BCDL = 10.0psf.
4) Refer to girder(s) for truss to truss connections.
5) Provide mechanical connection (by others) of truss to bearing plate capable of withstanding 100 lb uplift at joint(s) 10.

April 1,2022

ENGINEERING BY TRENCO A MiTek Affiliate
818 Soundside Road
Edenton, NC 27932

Job	Truss	Truss Type	Qty	Ply	Clearwater Farm
FARM	A13	SPECIAL	1	1	I51100398 Job Reference (optional)

Builders FirstSource (Apex, NC), Apex, NC - 27523, 8.530 s Dec 6 2021 MiTek Industries, Inc. Thu Mar 31 10:15:29 2022 Page 1
ID:zbkIr1dFypInNUy02maTGGyYVBm-7I92lNka8mxcd14NH8aq_l2TRUlmZ?TUMwKIPgzVRxi

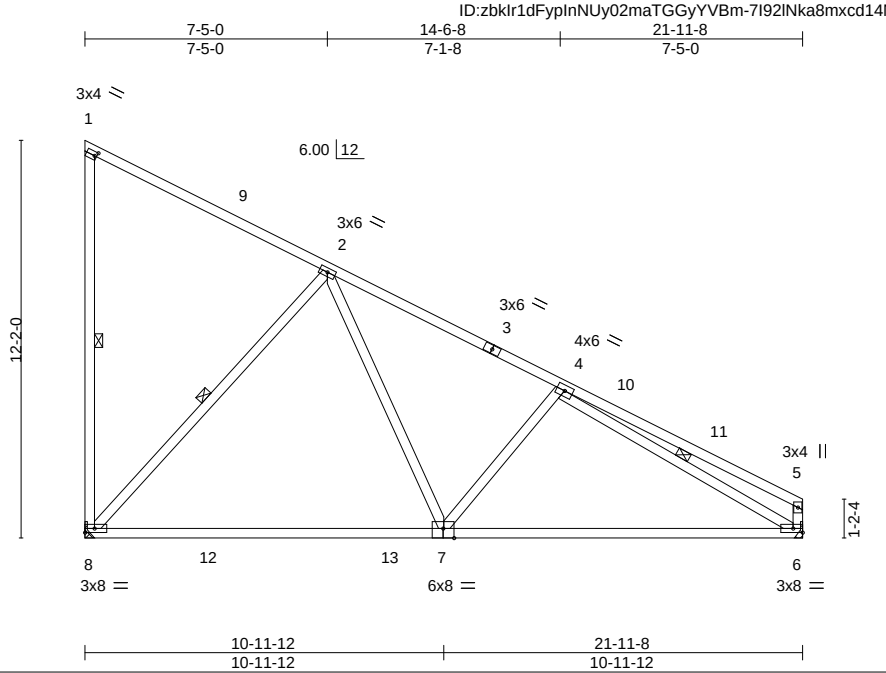

Plate Offsets (X,Y)-- [1:0-0-13,0-1-8], [7:0-4-0,Edge]

LOADING (psf)		SPACING- 2-0-0		CSI.		DEFL. in (loc) l/defl L/d				PLATES	GRIP
TCLL	20.0	Plate Grip DOL	1.15	TC	0.68	Vert(LL)	-0.60	7-8	>430	360	MT20	244/190
TCDL	10.0	Lumber DOL	1.15	BC	0.94	Vert(CT)	-0.89	7-8	>293	240		
BCLL	0.0 *	Rep Stress Incr	YES	WB	0.49	Horz(CT)	0.02	6	n/a	n/a		
BCDL	10.0	Code IRC2015/TPI2014		Matrix-MS		Wind(LL)	-0.12	7-8	>999	240	Weight: 137 lb	FT = 20%

LUMBER-
TOP CHORD 2x4 SP No.2
BOT CHORD 2x4 SP No.1
WEBS 2x4 SP No.3 *Except*
1-8: 2x4 SP No.1

BRACING-
TOP CHORD Structural wood sheathing directly applied or 5-5-5 oc purlins, except end verticals.
BOT CHORD Rigid ceiling directly applied or 2-2-0 oc bracing.
WEBS 1 Row at midpt 1-8, 2-8, 4-6

REACTIONS. (size) 8=Mechanical, 6=Mechanical
Max Horz 8=-368(LC 8)
Max Uplift 8=-45(LC 8)
Max Grav 8=892(LC 20), 6=867(LC 1)

FORCES. (lb) - Max. Comp./Max. Ten. - All forces 250 (lb) or less except when shown.
TOP CHORD 2-4=-992/98, 4-5=-366/71, 5-6=-321/84
BOT CHORD 7-8=0/634, 6-7=-23/975
WEBS 2-8=-799/131, 2-7=0/617, 4-7=-321/144, 4-6=-957/31

NOTES-
1) Wind: ASCE 7-10; Vult=115mph Vasd=91mph; TCDL=6.0psf; BCDL=6.0psf; h=32ft; Cat. II; Exp B; Enclosed; MWFRS (envelope) gable end zone and C-C Exterior(2) 0-1-12 to 4-4-11, Interior(1) 4-4-11 to 21-9-12 zone; cantilever left and right exposed ; end vertical left and right exposed;C-C for members and forces & MWFRS for reactions shown; Lumber DOL=1.60 plate grip DOL=1.60
2) This truss has been designed for a 10.0 psf bottom chord live load nonconcurrent with any other live loads.
3) * This truss has been designed for a live load of 20.0psf on the bottom chord in all areas where a rectangle 3-6-0 tall by 2-0-0 wide will fit between the bottom chord and any other members, with BCDL = 10.0psf.
4) Refer to girder(s) for truss to truss connections.
5) Provide mechanical connection (by others) of truss to bearing plate capable of withstanding 100 lb uplift at joint(s) 8.

April 1,2022

ENGINEERING BY TRENCO A MiTek Affiliate
818 Soundside Road
Edenton, NC 27932

Job	Truss	Truss Type	Qty	Ply	Clearwater Farm
FARM	B01SG	MODIFIED QUEENPOST	1	1	I51100399 Job Reference (optional)

Builders FirstSource (Apex, NC), Apex, NC - 27523, 8.530 s Dec 6 2021 MiTek Industries, Inc. Thu Mar 31 10:15:30 2022 Page 1
ID:zbklr1dFypInNUy02maTGGyYVBm-bUjQyjkCv43TEBfZqs53XzaemuC0IMheba3ry6zVRxh

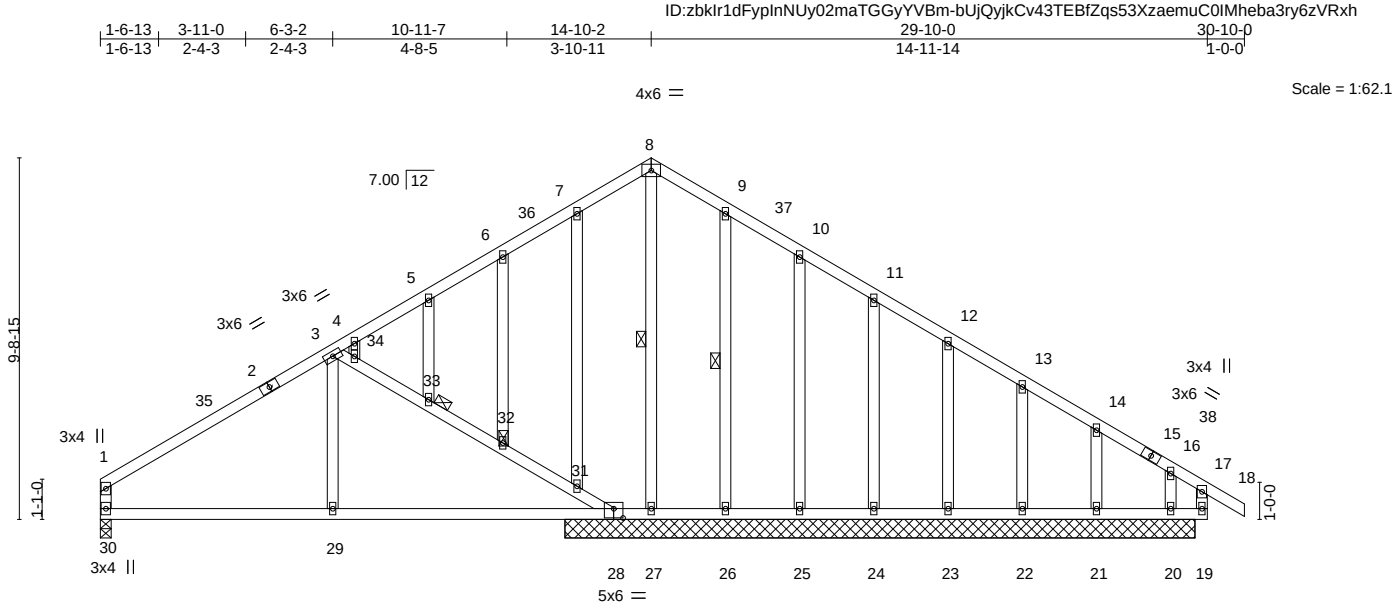

Plate Offsets (X,Y)-- [28:0-3-0,0-3-0]

LOADING (psf)		SPACING- 2-0-0		CSI.		DEFL.	in	(loc)	l/defl	L/d	PLATES	GRIP
TCLL	20.0	Plate Grip DOL	1.15	TC	0.64	Vert(LL)	-0.06	28-29	>999	360	MT20	244/190
TCDL	10.0	Lumber DOL	1.15	BC	0.49	Vert(CT)	-0.13	28-29	>999	240		
BCLL	0.0 *	Rep Stress Incr	NO	WB	0.88	Horz(CT)	0.01	28	n/a	n/a		
BCDL	10.0	Code IRC2015/TPI2014		Matrix-MS		Wind(LL)	0.03	28-29	>999	240	Weight: 203 lb	FT = 20%

LUMBER-
TOP CHORD 2x4 SP No.2
BOT CHORD 2x4 SP No.2
WEBS 2x4 SP No.3

BRACING-
TOP CHORD Structural wood sheathing directly applied or 6-0-0 oc purlins, except end verticals.
BOT CHORD Rigid ceiling directly applied or 6-0-0 oc bracing, Except: 10-0-0 oc bracing: 29-30,28-29.
WEBS 1 Row at midpt 8-27, 9-26
JOINTS 1 Brace at Jt(s): 32, 33

REACTIONS. All bearings 16-11-12 except (jt=length) 30=0-3-8.
(lb) - Max Horz 30=-202(LC 10)
Max Uplift All uplift 100 lb or less at joint(s) 30, 28, 27, 26, 25, 24, 23, 22, 21 except 20=-137(LC 23)
Max Grav All reactions 250 lb or less at joint(s) 26, 25, 24, 23, 22, 20 except 30=416(LC 23), 28=698(LC 19), 27=303(LC 1), 21=306(LC 20)

FORCES. (lb) - Max. Comp./Max. Ten. - All forces 250 (lb) or less except when shown.
TOP CHORD 1-3=-438/103, 4-5=-24/258, 5-6=-2/267, 6-7=0/332, 7-8=-13/310, 8-9=-3/311, 9-10=0/274, 10-11=0/265, 11-12=0/264, 12-13=0/266, 13-14=-7/259, 14-16=-61/288, 1-30=-343/82
BOT CHORD 29-30=-99/384, 28-29=-99/384
WEBS 3-34=-663/187, 33-34=-550/125, 32-33=-596/147, 31-32=-584/145, 28-31=-687/187, 8-27=-422/0, 3-29=0/274

NOTES-
1) Unbalanced roof live loads have been considered for this design.
2) Wind: ASCE 7-10; Vult=115mph Vasd=91mph; TCDL=6.0psf; BCDL=6.0psf; h=32ft; Cat. II; Exp B; Enclosed; MWFRS (envelope) gable end zone and C-C Exterior(2) 0-1-12 to 3-1-12, Interior(1) 3-1-12 to 14-10-2, Exterior(2) 14-10-2 to 17-10-2, Interior(1) 17-10-2 to 30-10-0 zone; cantilever left and right exposed ; end vertical left and right exposed;C-C for members and forces & MWFRS for reactions shown; Lumber DOL=1.60 plate grip DOL=1.60
3) All plates are 2x4 MT20 unless otherwise indicated.
4) This truss has been designed for a 10.0 psf bottom chord live load nonconcurrent with any other live loads.
5) * This truss has been designed for a live load of 20.0psf on the bottom chord in all areas where a rectangle 3-6-0 tall by 2-0-0 wide will fit between the bottom chord and any other members.
6) Provide mechanical connection (by others) of truss to bearing plate capable of withstanding 100 lb uplift at joint(s) 30, 28, 27, 26, 25, 24, 23, 22, 21 except (jt=lb) 20=137.

NORTH CAROLINA PROFESSIONAL SEAL 036322 ENGINEER ERIC A. GILBERT

April 1,2022

ENGINEERING BY TRENCO A MiTek Affiliate
818 Soundside Road
Edenton, NC 27932

Job	Truss	Truss Type	Qty	Ply	Clearwater Farm
FARM	B02GR	COMMON	1	3	I51100400 Job Reference (optional)

Builders FirstSource (Apex, NC), Apex, NC - 27523, 8.530 s Dec 6 2021 MiTek Industries, Inc. Thu Mar 31 10:15:32 2022 Page 1
ID:zbkIr1dFypInNUy02maTGGyYVBm-XtrANPmTRhKBUVpyyG7XcOf2KhwAmOhw2uYy0?zVRxf

5-1-11	9-11-15	14-10-2	19-6-2	24-2-1	29-1-8
5-1-11	4-10-3	4-10-3	4-7-15	4-7-15	4-11-7

Scale = 1:62.7

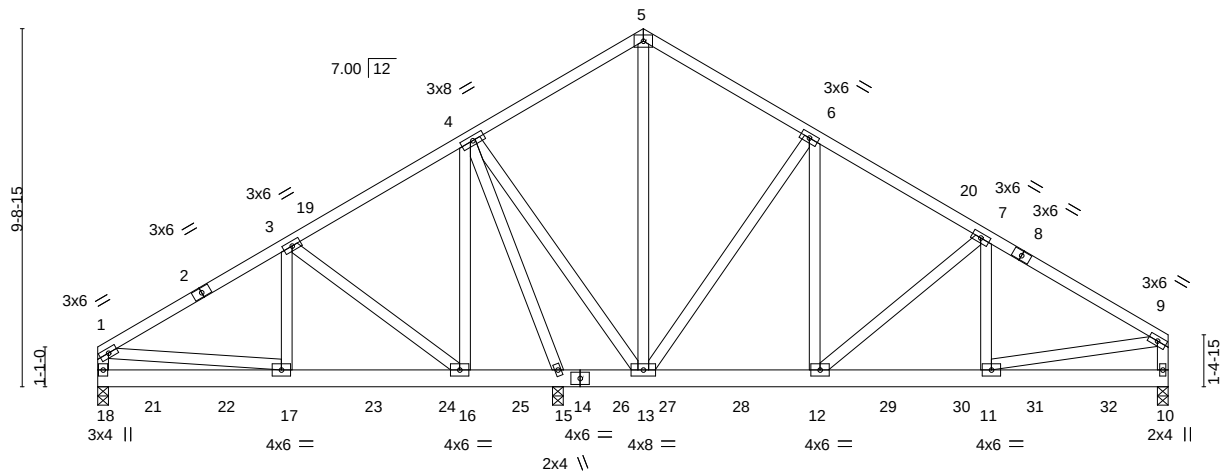

5-1-11	9-11-15	12-6-4	14-10-2	19-6-2	24-2-1	29-1-8
5-1-11	4-10-3	2-6-5	2-3-14	4-7-15	4-7-15	4-11-7

LOADING (psf)		**SPACING-** 2-0-0	**CSI.**		**DEFL.** in (loc) l/defl L/d	**PLATES**	**GRIP**
TCLL	20.0	Plate Grip DOL 1.15	TC	0.38	Vert(LL) -0.03 12-13 >999 360	MT20	244/190
TCDL	10.0	Lumber DOL 1.15	BC	0.38	Vert(CT) -0.05 12-13 >999 240		
BCLL	0.0 *	Rep Stress Incr NO	WB	0.34	Horz(CT) 0.01 10 n/a n/a		
BCDL	10.0	Code IRC2015/TPI2014	Matrix-MS		Wind(LL) 0.01 17-18 >999 240	Weight: 679 lb	FT = 20%

LUMBER-
TOP CHORD 2x4 SP No.2
BOT CHORD 2x6 SP No.2
WEBS 2x4 SP No.3

BRACING-
TOP CHORD Structural wood sheathing directly applied or 6-0-0 oc purlins, except end verticals.
BOT CHORD Rigid ceiling directly applied or 10-0-0 oc bracing, Except: 6-0-0 oc bracing: 13-15.

REACTIONS. (size) 18=0-3-8, 10=0-3-8, 15=0-3-8
Max Horz 18=195(LC 7)
Max Uplift 18=-118(LC 8), 10=-119(LC 9)
Max Grav 18=2094(LC 19), 10=1729(LC 1), 15=5101(LC 1)

FORCES. (lb) - Max. Comp./Max. Ten. - All forces 250 (lb) or less except when shown.
TOP CHORD 1-18=-1520/52, 1-3=-2343/56, 3-4=-847/0, 4-5=-412/0, 5-6=-407/0, 6-7=-1391/12, 7-9=-1980/120, 9-10=-1433/99
BOT CHORD 17-18=-227/497, 16-17=-127/1959, 15-16=0/667, 13-15=-764/159, 12-13=0/1143, 11-12=-62/1650
WEBS 1-17=0/1497, 3-17=-181/1474, 3-16=-1621/291, 4-16=0/2092, 4-15=-3854/0, 4-13=0/1763, 6-13=-1490/155, 6-12=-99/1423, 7-12=-664/227, 7-11=-151/501, 9-11=-20/1485

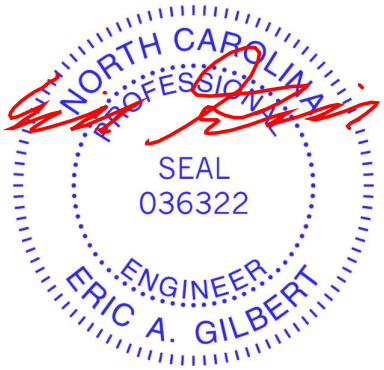

NOTES-
1) 3-ply truss to be connected together with 10d (0.131"x3") nails as follows:
Top chords connected as follows: 2x4 - 1 row at 0-9-0 oc.
Bottom chords connected as follows: 2x6 - 2 rows staggered at 0-9-0 oc.
Webs connected as follows: 2x4 - 1 row at 0-9-0 oc.
2) All loads are considered equally applied to all plies, except if noted as front (F) or back (B) face in the LOAD CASE(S) section. Ply to ply connections have been provided to distribute only loads noted as (F) or (B), unless otherwise indicated.
3) Unbalanced roof live loads have been considered for this design.
4) Wind: ASCE 7-10; Vult=115mph Vasd=91mph; TCDL=6.0psf; BCDL=6.0psf; h=32ft; Cat. II; Exp B; Enclosed; MWFRS (envelope) gable end zone; cantilever left and right exposed ; end vertical left and right exposed; Lumber DOL=1.60 plate grip DOL=1.60
5) This truss has been designed for a 10.0 psf bottom chord live load nonconcurrent with any other live loads.
6) * This truss has been designed for a live load of 20.0psf on the bottom chord in all areas where a rectangle 3-6-0 tall by 2-0-0 wide will fit between the bottom chord and any other members.
7) Provide mechanical connection (by others) of truss to bearing plate capable of withstanding 100 lb uplift at joint(s) except (jt=lb) 18=118, 10=119.
8) Hanger(s) or other connection device(s) shall be provided sufficient to support concentrated load(s) 544 lb down and 101 lb up at 1-5-4, 544 lb down and 101 lb up at 3-5-4, 544 lb down and 101 lb up at 5-5-4, 544 lb down and 101 lb up at 7-5-4, 847 lb down at 9-5-4, 847 lb down at 11-5-4, 433 lb down at 13-5-4, 433 lb down at 15-5-4, 433 lb down at 17-5-4, 289 lb down and 70 lb up at 19-5-4, 289 lb down and 70 lb up at 21-5-4, 289 lb down and 70 lb up at 23-5-4, and 289 lb down and 70 lb up at 25-5-4, and 289 lb down and 70 lb up at 27-5-4 on bottom chord. The design/selection of such connection device(s) is the responsibility of others.

LOAD CASE(S) Standard

April 1,2022

Continued on page 2

ENGINEERING BY TRENCO A MiTek Affiliate
818 Soundside Road
Edenton, NC 27932

LOAD CASE(S) Standard

1) Dead + Roof Live (balanced): Lumber Increase=1.15, Plate Increase=1.15
   Uniform Loads (plf)
   Vert: 1-5=-60, 5-9=-60, 10-18=-20
   Concentrated Loads (lb)
   Vert: 17=-544(B) 12=-289(B) 21=-544(B) 22=-544(B) 23=-544(B) 24=-847(B) 25=-847(B) 26=-433(B) 27=-433(B) 28=-433(B) 29=-289(B) 30=-289(B) 31=-289(B) 32=-289(B)

Job	Truss	Truss Type	Qty	Ply	Clearwater Farm
FARM	C01	COMMON	2	1	I51100401 Job Reference (optional)

Builders FirstSource (Apex, NC), Apex, NC - 27523, 8.530 s Dec 6 2021 MiTek Industries, Inc. Thu Mar 31 10:15:33 2022 Page 1
ID:jww8HilN90uFSTm7sxLqmezW8I3-?3OYakn5C?S25eO8W_em8bC765GpVvi4HYIVYRzVRxe

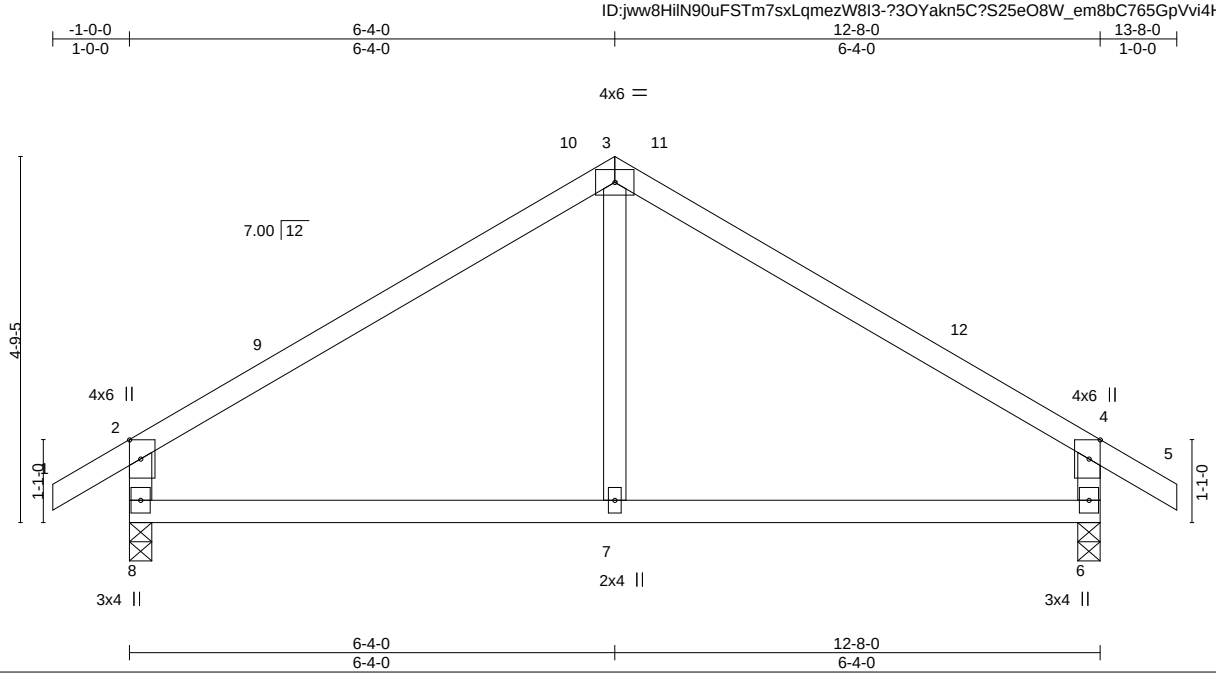

Plate Offsets (X,Y)-- [2:0-3-0,Edge], [4:0-3-0,Edge]

LOADING (psf)		SPACING-	2-0-0	CSI.		DEFL.	in	(loc)	l/defl	L/d	PLATES	GRIP
TCLL	20.0	Plate Grip DOL	1.15	TC	0.83	Vert(LL)	-0.04	6-7	>999	360	MT20	244/190
TCDL	10.0	Lumber DOL	1.15	BC	0.29	Vert(CT)	-0.08	6-7	>999	240		
BCLL	0.0 *	Rep Stress Incr	YES	WB	0.09	Horz(CT)	0.01	6	n/a	n/a		
BCDL	10.0	Code IRC2015/TPI2014		Matrix-MR		Wind(LL)	-0.02	7-8	>999	240	Weight: 53 lb	FT = 20%

LUMBER-
TOP CHORD 2x4 SP No.2
BOT CHORD 2x4 SP No.2
WEBS 2x4 SP No.3

BRACING-
TOP CHORD Structural wood sheathing directly applied or 6-0-0 oc purlins, except end verticals.
BOT CHORD Rigid ceiling directly applied or 10-0-0 oc bracing.

REACTIONS. (size) 8=0-3-8, 6=0-3-8
Max Horz 8=-109(LC 10)
Max Uplift 8=-19(LC 12), 6=-19(LC 13)
Max Grav 8=564(LC 1), 6=564(LC 1)

FORCES. (lb) - Max. Comp./Max. Ten. - All forces 250 (lb) or less except when shown.
TOP CHORD 2-8=-494/108, 2-3=-525/63, 3-4=-525/63, 4-6=-494/108
BOT CHORD 7-8=0/360, 6-7=0/360

NOTES-
1) Unbalanced roof live loads have been considered for this design.
2) Wind: ASCE 7-10; Vult=115mph Vasd=91mph; TCDL=6.0psf; BCDL=6.0psf; h=32ft; Cat. II; Exp B; Enclosed; MWFRS (envelope) gable end zone and C-C Exterior(2) -1-0-0 to 2-0-0, Interior(1) 2-0-0 to 6-4-0, Exterior(2) 6-4-0 to 10-6-15, Interior(1) 10-6-15 to 13-8-0 zone; cantilever left and right exposed ; end vertical left and right exposed;C-C for members and forces & MWFRS for reactions shown; Lumber DOL=1.60 plate grip DOL=1.60
3) This truss has been designed for a 10.0 psf bottom chord live load nonconcurrent with any other live loads.
4) * This truss has been designed for a live load of 20.0psf on the bottom chord in all areas where a rectangle 3-6-0 tall by 2-0-0 wide will fit between the bottom chord and any other members.
5) Provide mechanical connection (by others) of truss to bearing plate capable of withstanding 100 lb uplift at joint(s) 8, 6.

April 1,2022

ENGINEERING BY TRENCO A MiTek Affiliate
818 Soundside Road
Edenton, NC 27932

Job	Truss	Truss Type	Qty	Ply	Clearwater Farm
FARM	C01G	GABLE	1	1	I51100402 Job Reference (optional)

Builders FirstSource (Apex, NC), Apex, NC - 27523, 8.530 s Dec 6 2021 MiTek Industries, Inc. Thu Mar 31 10:15:34 2022 Page 1
ID:jww8HilN90uFSTm7sxLqmezW8I3-TFywo4njyIavjozK3h9?hplTEVgwENjDVC125tzVRxd

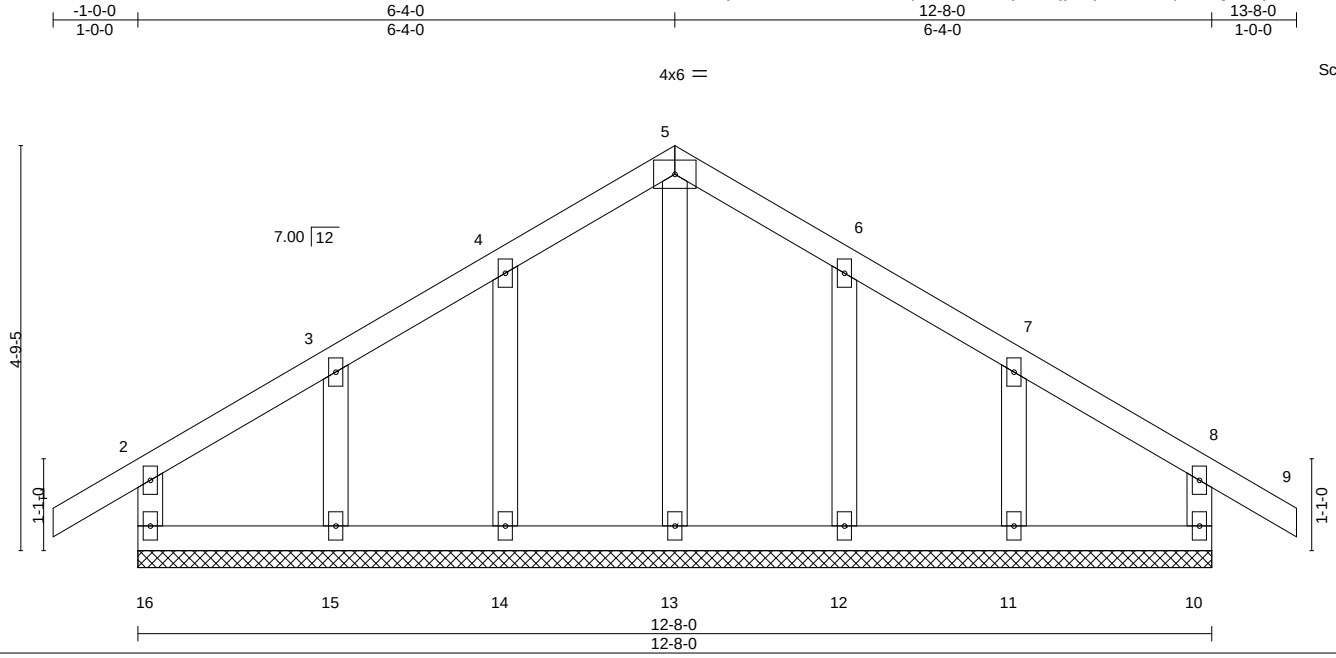

LOADING (psf)		SPACING- 2-0-0		CSI.		DEFL.	in	(loc)	l/defl	L/d	PLATES	GRIP
TCLL	20.0	Plate Grip DOL	1.15	TC	0.10	Vert(LL)	-0.00	9	n/r	120	MT20	244/190
TCDL	10.0	Lumber DOL	1.15	BC	0.04	Vert(CT)	-0.00	9	n/r	120		
BCLL	0.0 *	Rep Stress Incr	NO	WB	0.05	Horz(CT)	0.00	10	n/a	n/a		
BCDL	10.0	Code IRC2015/TPI2014		Matrix-R							Weight: 67 lb	FT = 20%

LUMBER-

TOP CHORD	2x4 SP No.2
BOT CHORD	2x4 SP No.2
WEBS	2x4 SP No.3
OTHERS	2x4 SP No.3

BRACING-

TOP CHORD	Structural wood sheathing directly applied or 6-0-0 oc purlins, except end verticals.
BOT CHORD	Rigid ceiling directly applied or 6-0-0 oc bracing.

REACTIONS. All bearings 12-8-0.
(lb) - Max Horz 16=109(LC 11)
Max Uplift All uplift 100 lb or less at joint(s) 16, 10, 14, 15, 12, 11
Max Grav All reactions 250 lb or less at joint(s) 16, 10, 13, 14, 15, 12, 11

FORCES. (lb) - Max. Comp./Max. Ten. - All forces 250 (lb) or less except when shown.

NOTES-

1) Unbalanced roof live loads have been considered for this design.
2) Wind: ASCE 7-10; Vult=115mph Vasd=91mph; TCDL=6.0psf; BCDL=6.0psf; h=32ft; Cat. II; Exp B; Enclosed; MWFRS (envelope) gable end zone and C-C Corner(3) -1-0-0 to 2-0-0, Exterior(2) 2-0-0 to 6-4-0, Corner(3) 6-4-0 to 9-4-0, Exterior(2) 9-4-0 to 13-8-0 zone; cantilever left and right exposed ; end vertical left and right exposed;C-C for members and forces & MWFRS for reactions shown; Lumber DOL=1.60 plate grip DOL=1.60
3) Truss designed for wind loads in the plane of the truss only. For studs exposed to wind (normal to the face), see Standard Industry Gable End Details as applicable, or consult qualified building designer as per ANSI/TPI 1.
4) All plates are 2x4 MT20 unless otherwise indicated.
5) Gable requires continuous bottom chord bearing.
6) Truss to be fully sheathed from one face or securely braced against lateral movement (i.e. diagonal web).
7) Gable studs spaced at 2-0-0 oc.
8) This truss has been designed for a 10.0 psf bottom chord live load nonconcurrent with any other live loads.
9) * This truss has been designed for a live load of 20.0psf on the bottom chord in all areas where a rectangle 3-6-0 tall by 2-0-0 wide will fit between the bottom chord and any other members.
10) Provide mechanical connection (by others) of truss to bearing plate capable of withstanding 100 lb uplift at joint(s) 16, 10, 14, 15, 12, 11.

April 1,2022

ENGINEERING BY TRENCO A MiTek Affiliate
818 Soundside Road
Edenton, NC 27932

Job	Truss	Truss Type	Qty	Ply	Clearwater Farm
FARM	D01	COMMON	2	1	I51100403 Job Reference (optional)

Builders FirstSource (Apex, NC), Apex, NC - 27523, 8.530 s Dec 6 2021 MiTek Industries, Inc. Thu Mar 31 10:15:34 2022 Page 1
ID:jww8HilN90uFSTm7sxLqmezW8I3-TFywo4njyIavjozK3h9?hpIldVcIEM3DVC125tzVRxd

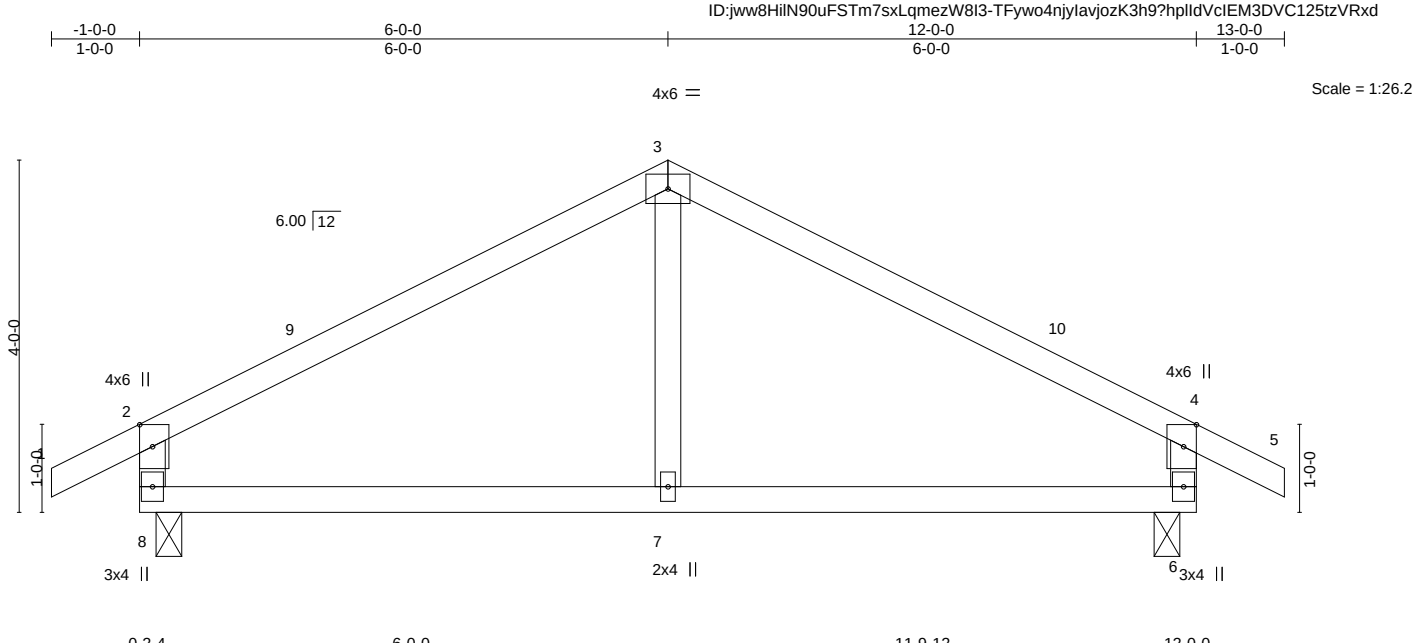

Plate Offsets (X,Y)-- [2:0-3-0,Edge], [4:0-3-0,Edge]

LOADING (psf)		SPACING- 2-0-0		CSI.		DEFL.	in	(loc)	l/defl	L/d	PLATES	GRIP
TCLL	20.0	Plate Grip DOL	1.15	TC	0.78	Vert(LL)	-0.03	7-8	>999	360	MT20	244/190
TCDL	10.0	Lumber DOL	1.15	BC	0.27	Vert(CT)	-0.07	7-8	>999	240		
BCLL	0.0 *	Rep Stress Incr	YES	WB	0.09	Horz(CT)	0.01	6	n/a	n/a		
BCDL	10.0	Code IRC2015/TPI2014		Matrix-MR		Wind(LL)	0.01	7-8	>999	240	Weight: 48 lb	FT = 20%

LUMBER-
TOP CHORD 2x4 SP No.2
BOT CHORD 2x4 SP No.2
WEBS 2x4 SP No.3

BRACING-
TOP CHORD Structural wood sheathing directly applied or 6-0-0 oc purlins, except end verticals.
BOT CHORD Rigid ceiling directly applied or 10-0-0 oc bracing.

REACTIONS. (size) 8=0-3-8, 6=0-3-8
Max Horz 8=56(LC 11)
Max Uplift 8=-23(LC 12), 6=-23(LC 13)
Max Grav 8=537(LC 1), 6=537(LC 1)

FORCES. (lb) - Max. Comp./Max. Ten. - All forces 250 (lb) or less except when shown.
TOP CHORD 2-8=-468/136, 2-3=-523/83, 3-4=-523/81, 4-6=-468/133
BOT CHORD 7-8=0/384, 6-7=0/384

NOTES-
1) Unbalanced roof live loads have been considered for this design.
2) Wind: ASCE 7-10; Vult=115mph Vasd=91mph; TCDL=6.0psf; BCDL=6.0psf; h=32ft; Cat. II; Exp B; Enclosed; MWFRS (envelope) gable end zone and C-C Exterior(2) -1-0-0 to 2-0-0, Interior(1) 2-0-0 to 6-0-0, Exterior(2) 6-0-0 to 10-2-15, Interior(1) 10-2-15 to 13-0-0 zone; cantilever left and right exposed ; end vertical left and right exposed;C-C for members and forces & MWFRS for reactions shown; Lumber DOL=1.60 plate grip DOL=1.60
3) This truss has been designed for a 10.0 psf bottom chord live load nonconcurrent with any other live loads.
4) * This truss has been designed for a live load of 20.0psf on the bottom chord in all areas where a rectangle 3-6-0 tall by 2-0-0 wide will fit between the bottom chord and any other members.
5) Provide mechanical connection (by others) of truss to bearing plate capable of withstanding 100 lb uplift at joint(s) 8, 6.

April 1,2022

ENGINEERING BY TRENCO A MiTek Affiliate
818 Soundside Road
Edenton, NC 27932

Job	Truss	Truss Type	Qty	Ply	Clearwater Farm
FARM	D01GR	HIP	1	1	I51100404 Job Reference (optional)

Builders FirstSource (Apex, NC), Apex, NC - 27523, 8.530 s Dec 6 2021 MiTek Industries, Inc. Thu Mar 31 10:15:35 2022 Page 1
ID:jww8HilN90uFSTm7sxLqmezW8I3-xSWJ?QoLjcimLyYXdPgEE0HaNvzEzmXNksncdJzVRxc

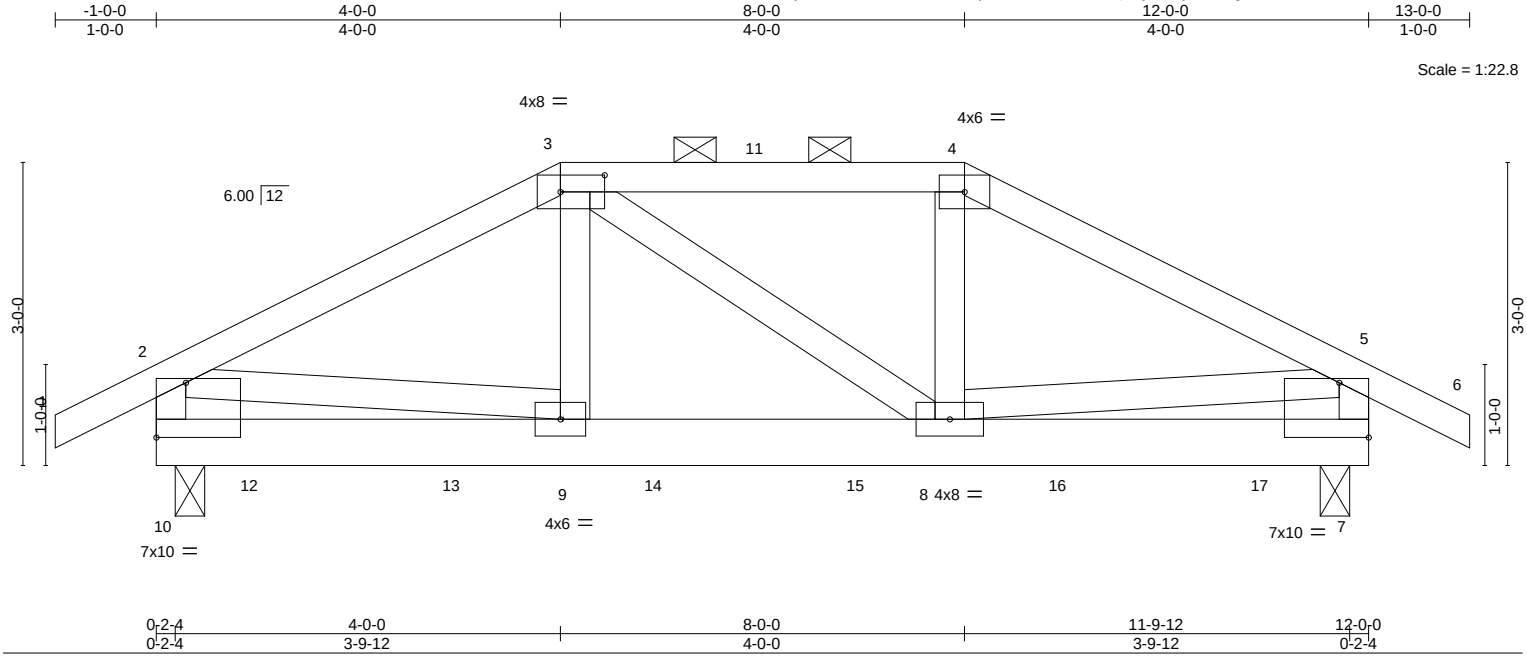

Plate Offsets (X,Y)-- [3:0-5-4,0-2-0], [7:Edge,0-6-8], [10:Edge,0-6-8]

LOADING (psf)		SPACING- 2-0-0		CSI.		DEFL.	in	(loc)	l/defl	L/d	PLATES	GRIP
TCLL	20.0	Plate Grip DOL	1.15	TC	0.33	Vert(LL)	-0.02	8-9	>999	360	MT20	244/190
TCDL	10.0	Lumber DOL	1.15	BC	0.23	Vert(CT)	-0.03	8-9	>999	240		
BCLL	0.0 *	Rep Stress Incr	NO	WB	0.27	Horz(CT)	0.00	7	n/a	n/a		
BCDL	10.0	Code IRC2015/TPI2014		Matrix-MS		Wind(LL)	0.01	8-9	>999	240	Weight: 76 lb	FT = 20%

LUMBER-
TOP CHORD 2x4 SP No.2
BOT CHORD 2x6 SP No.2
WEBS 2x4 SP No.3

BRACING-
TOP CHORD Structural wood sheathing directly applied or 5-9-11 oc purlins, except end verticals, and 2-0-0 oc purlins (6-0-0 max.): 3-4.
BOT CHORD Rigid ceiling directly applied or 10-0-0 oc bracing.

REACTIONS. (size) 10=0-3-8, 7=0-3-8
Max Horz 10=44(LC 7)
Max Uplift 10=-159(LC 8), 7=-158(LC 9)
Max Grav 10=880(LC 1), 7=881(LC 1)

FORCES. (lb) - Max. Comp./Max. Ten. - All forces 250 (lb) or less except when shown.
TOP CHORD 2-10=-722/141, 2-3=-982/175, 3-4=-844/175, 4-5=-981/174, 5-7=-717/140
BOT CHORD 8-9=-130/835
WEBS 2-9=-106/642, 5-8=-107/635

NOTES-
1) Unbalanced roof live loads have been considered for this design.
2) Wind: ASCE 7-10; Vult=115mph Vasd=91mph; TCDL=6.0psf; BCDL=6.0psf; h=32ft; Cat. II; Exp B; Enclosed; MWFRS (envelope) gable end zone; cantilever left and right exposed ; end vertical left and right exposed; Lumber DOL=1.60 plate grip DOL=1.60
3) Provide adequate drainage to prevent water ponding.
4) This truss has been designed for a 10.0 psf bottom chord live load nonconcurrent with any other live loads.
5) * This truss has been designed for a live load of 20.0psf on the bottom chord in all areas where a rectangle 3-6-0 tall by 2-0-0 wide will fit between the bottom chord and any other members.
6) Provide mechanical connection (by others) of truss to bearing plate capable of withstanding 100 lb uplift at joint(s) except (jt=lb) 10=159, 7=158.
7) Graphical purlin representation does not depict the size or the orientation of the purlin along the top and/or bottom chord.
8) Hanger(s) or other connection device(s) shall be provided sufficient to support concentrated load(s) 108 lb down and 49 lb up at 1-0-0, 118 lb down and 43 lb up at 3-0-0, 118 lb down and 57 lb up at 5-0-0, 118 lb down and 57 lb up at 7-0-0, and 118 lb down and 43 lb up at 9-0-0, and 109 lb down and 47 lb up at 11-0-0 on bottom chord. The design/selection of such connection device(s) is the responsibility of others.
9) In the LOAD CASE(S) section, loads applied to the face of the truss are noted as front (F) or back (B).

LOAD CASE(S) Standard
1) Dead + Roof Live (balanced): Lumber Increase=1.15, Plate Increase=1.15
Uniform Loads (plf)
Vert: 1-2=-60, 2-3=-60, 3-4=-60, 4-5=-60, 5-6=-60, 7-10=-20
Concentrated Loads (lb)
Vert: 12=-108(B) 13=-118(B) 14=-118(B) 15=-118(B) 16=-118(B) 17=-109(B)

April 1,2022

ENGINEERING BY TRENCO A MiTek Affiliate
818 Soundside Road
Edenton, NC 27932

Job	Truss	Truss Type	Qty	Ply	Clearwater Farm
FARM	J01	JACK	2	1	I51100405 Job Reference (optional)

Builders FirstSource (Apex, NC), Apex, NC - 27523, 8.530 s Dec 6 2021 MiTek Industries, Inc. Thu Mar 31 10:15:36 2022 Page 1
ID:jww8HiIN90uFSTm7sxLqmezW8I3-Qe4hDmpzUwqdz67jB6CTmEqnBIKjiHWWzWW99mzVRxb

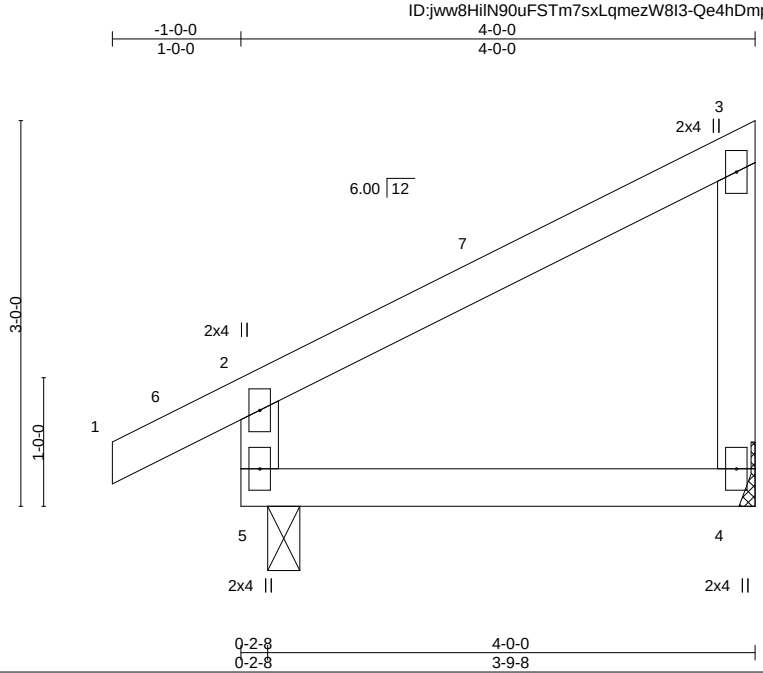

LOADING (psf)		SPACING- 2-0-0		CSI.		DEFL. in (loc) l/defl L/d		PLATES	GRIP
TCLL	20.0	Plate Grip DOL	1.15	TC	0.20	Vert(LL) -0.01 4-5 >999 360		MT20	244/190
TCDL	10.0	Lumber DOL	1.15	BC	0.15	Vert(CT) -0.02 4-5 >999 240			
BCLL	0.0 *	Rep Stress Incr	YES	WB	0.03	Horz(CT) 0.00 n/a n/a			
BCDL	10.0	Code IRC2015/TPI2014		Matrix-MS		Wind(LL) 0.01 4-5 >999 240		Weight: 19 lb	FT = 20%

LUMBER-
TOP CHORD 2x4 SP No.2
BOT CHORD 2x4 SP No.2
WEBS 2x4 SP No.2 *Except*
3-4: 2x4 SP No.3

BRACING-
TOP CHORD Structural wood sheathing directly applied or 4-0-0 oc purlins, except end verticals.
BOT CHORD Rigid ceiling directly applied or 10-0-0 oc bracing.

REACTIONS. (size) 5=0-3-0, 4=Mechanical
Max Horz 5=64(LC 12)
Max Uplift 5=-4(LC 12), 4=-37(LC 12)
Max Grav 5=228(LC 1), 4=138(LC 1)

FORCES. (lb) - Max. Comp./Max. Ten. - All forces 250 (lb) or less except when shown.

NOTES-
1) Unbalanced roof live loads have been considered for this design.
2) Wind: ASCE 7-10; Vult=115mph Vasd=91mph; TCDL=6.0psf; BCDL=6.0psf; h=32ft; Cat. II; Exp B; Enclosed; MWFRS (envelope) gable end zone and C-C Exterior(2) -1-0-0 to 2-0-0, Interior(1) 2-0-0 to 3-10-4 zone; cantilever left and right exposed ; end vertical left and right exposed;C-C for members and forces & MWFRS for reactions shown; Lumber DOL=1.60 plate grip DOL=1.60
3) This truss has been designed for a 10.0 psf bottom chord live load nonconcurrent with any other live loads.
4) * This truss has been designed for a live load of 20.0psf on the bottom chord in all areas where a rectangle 3-6-0 tall by 2-0-0 wide will fit between the bottom chord and any other members.
5) Refer to girder(s) for truss to truss connections.
6) Provide mechanical connection (by others) of truss to bearing plate capable of withstanding 100 lb uplift at joint(s) 5, 4.

April 1,2022

ENGINEERING BY TRENCO A MiTek Affiliate
818 Soundside Road
Edenton, NC 27932

Job	Truss	Truss Type	Qty	Ply	Clearwater Farm
FARM	J02	MONO HIP	2	1	I51100406 Job Reference (optional)

Builders FirstSource (Apex, NC), Apex, NC - 27523, 8.530 s Dec 6 2021 MiTek Industries, Inc. Thu Mar 31 10:15:36 2022 Page 1
ID:jww8HilN90uFSTm7sxLqmezW8I3-Qe4hDmpzUwqdz67jB6CTmEqoNIKiiHaWzWW99mzVRxb

Scale = 1:15.2

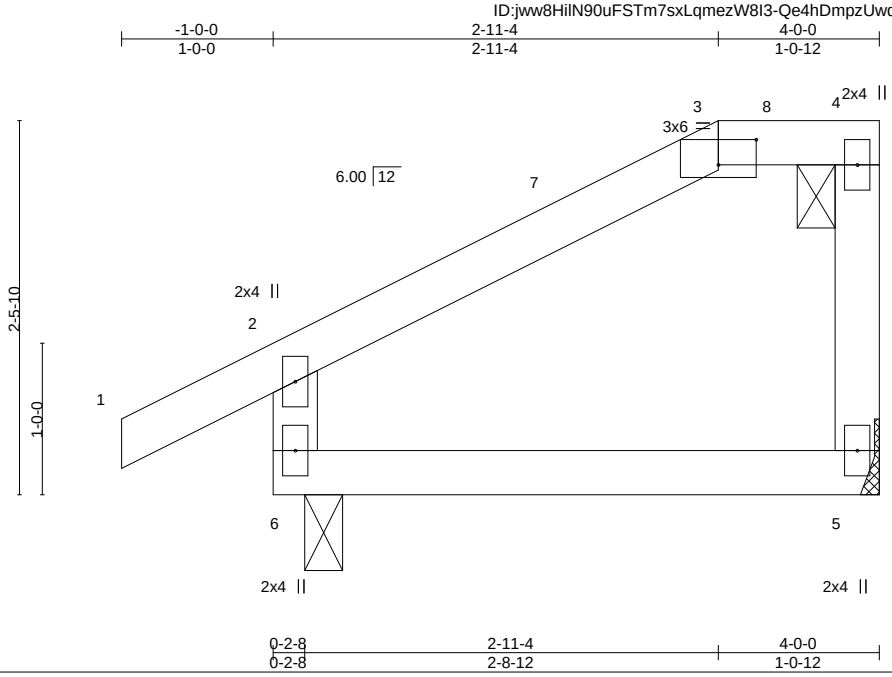

Plate Offsets (X,Y)-- [3:0-3-0,0-2-0]

LOADING (psf)		SPACING- 2-0-0		CSI.		DEFL.	in	(loc)	l/defl	L/d	PLATES	GRIP
TCLL	20.0	Plate Grip DOL	1.15	TC	0.19	Vert(LL)	-0.01	5-6	>999	360	MT20	244/190
TCDL	10.0	Lumber DOL	1.15	BC	0.15	Vert(CT)	-0.02	5-6	>999	240		
BCLL	0.0 *	Rep Stress Incr	YES	WB	0.02	Horz(CT)	0.00		n/a	n/a		
BCDL	10.0	Code IRC2015/TPI2014		Matrix-MS		Wind(LL)	0.01	5-6	>999	240	Weight: 18 lb	FT = 20%

LUMBER-
TOP CHORD 2x4 SP No.2
BOT CHORD 2x4 SP No.2
WEBS 2x4 SP No.3

BRACING-
TOP CHORD Structural wood sheathing directly applied or 4-0-0 oc purlins, except end verticals, and 2-0-0 oc purlins: 3-4.
BOT CHORD Rigid ceiling directly applied or 10-0-0 oc bracing.

REACTIONS. (size) 6=0-3-0, 5=Mechanical
Max Horz 6=51(LC 12)
Max Uplift 6=-13(LC 12), 5=-23(LC 12)
Max Grav 6=228(LC 1), 5=138(LC 1)

FORCES. (lb) - Max. Comp./Max. Ten. - All forces 250 (lb) or less except when shown.

NOTES-
1) Unbalanced roof live loads have been considered for this design.
2) Wind: ASCE 7-10; Vult=115mph Vasd=91mph; TCDL=6.0psf; BCDL=6.0psf; h=32ft; Cat. II; Exp B; Enclosed; MWFRS (envelope) gable end zone and C-C Exterior(2) -1-0-0 to 2-0-0, Interior(1) 2-0-0 to 2-11-4, Exterior(2) 2-11-4 to 3-10-4 zone; cantilever left and right exposed ; end vertical left and right exposed;C-C for members and forces & MWFRS for reactions shown; Lumber DOL=1.60 plate grip DOL=1.60
3) Provide adequate drainage to prevent water ponding.
4) This truss has been designed for a 10.0 psf bottom chord live load nonconcurrent with any other live loads.
5) * This truss has been designed for a live load of 20.0psf on the bottom chord in all areas where a rectangle 3-6-0 tall by 2-0-0 wide will fit between the bottom chord and any other members.
6) Refer to girder(s) for truss to truss connections.
7) Provide mechanical connection (by others) of truss to bearing plate capable of withstanding 100 lb uplift at joint(s) 6, 5.
8) Graphical purlin representation does not depict the size or the orientation of the purlin along the top and/or bottom chord.

April 1,2022

ENGINEERING BY TRENCO A MiTek Affiliate
818 Soundside Road
Edenton, NC 27932

Job	Truss	Truss Type	Qty	Ply	Clearwater Farm
FARM	J03	JACK	2	1	I51100407 Job Reference (optional)

Builders FirstSource (Apex, NC), Apex, NC - 27523, 8.530 s Dec 6 2021 MiTek Industries, Inc. Thu Mar 31 10:15:37 2022 Page 1
ID:jww8HilN90uFSTm7sxLqmezW8I3-uqe3Q6qbFDyUaGhvlqjiJRNzdihxRkAgCAGjhCzVRxa

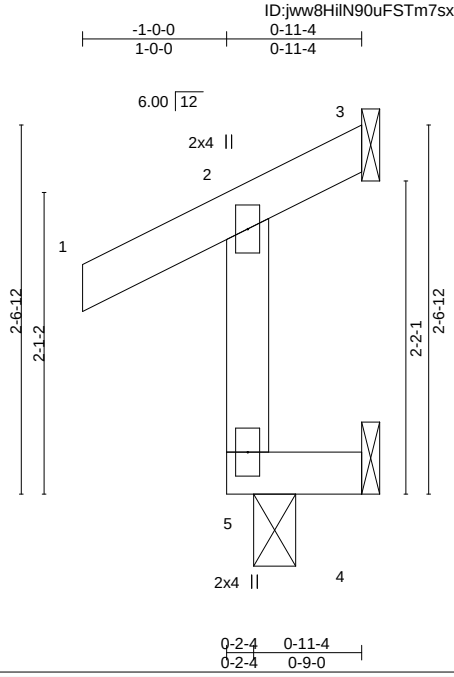

LOADING (psf)		SPACING- 2-0-0		CSI.		DEFL. in (loc) l/defl L/d		PLATES GRIP
TCLL	20.0	Plate Grip DOL	1.15	TC	0.16	Vert(LL) -0.00 5 >999 240		MT20 244/190
TCDL	10.0	Lumber DOL	1.15	BC	0.09	Vert(CT) -0.00 5 >999 180		
BCLL	0.0 *	Rep Stress Incr	YES	WB	0.00	Horz(CT) -0.01 3 n/a n/a		
BCDL	10.0	Code IRC2015/TPI2014		Matrix-MR				Weight: 7 lb FT = 20%

LUMBER-
TOP CHORD 2x4 SP No.2
BOT CHORD 2x4 SP No.2
WEBS 2x4 SP No.3

BRACING-
TOP CHORD Structural wood sheathing directly applied or 0-11-4 oc purlins, except end verticals.
BOT CHORD Rigid ceiling directly applied or 10-0-0 oc bracing.

REACTIONS. (size) 5=0-3-8, 3=Mechanical, 4=Mechanical
Max Horz 5=46(LC 9)
Max Uplift 5=-5(LC 8), 3=-31(LC 9), 4=-37(LC 9)
Max Grav 5=150(LC 1), 3=11(LC 10), 4=33(LC 10)

FORCES. (lb) - Max. Comp./Max. Ten. - All forces 250 (lb) or less except when shown.

NOTES-
1) Wind: ASCE 7-10; Vult=115mph Vasd=91mph; TCDL=6.0psf; BCDL=6.0psf; h=32ft; Cat. II; Exp B; Enclosed; MWFRS (envelope) gable end zone and C-C Exterior(2) zone; cantilever left and right exposed ; end vertical left and right exposed;C-C for members and forces & MWFRS for reactions shown; Lumber DOL=1.60 plate grip DOL=1.60
2) This truss has been designed for a 10.0 psf bottom chord live load nonconcurrent with any other live loads.
3) * This truss has been designed for a live load of 20.0psf on the bottom chord in all areas where a rectangle 3-6-0 tall by 2-0-0 wide will fit between the bottom chord and any other members.
4) Refer to girder(s) for truss to truss connections.
5) Provide mechanical connection (by others) of truss to bearing plate capable of withstanding 100 lb uplift at joint(s) 5, 3, 4.

April 1,2022

ENGINEERING BY TRENCO A MiTek Affiliate
818 Soundside Road
Edenton, NC 27932

Job	Truss	Truss Type	Qty	Ply	Clearwater Farm
FARM	J03GR	MONO HIP	2	1	I51100408 Job Reference (optional)

Builders FirstSource (Apex, NC), Apex, NC - 27523, 8.530 s Dec 6 2021 MiTek Industries, Inc. Thu Mar 31 10:15:38 2022 Page 1
ID:jww8HilN90uFSTm7sxLqmezW8I3-M1CRdSrE0X4LCQG6IXExrfv8L61PABApQq?GEezVRxZ

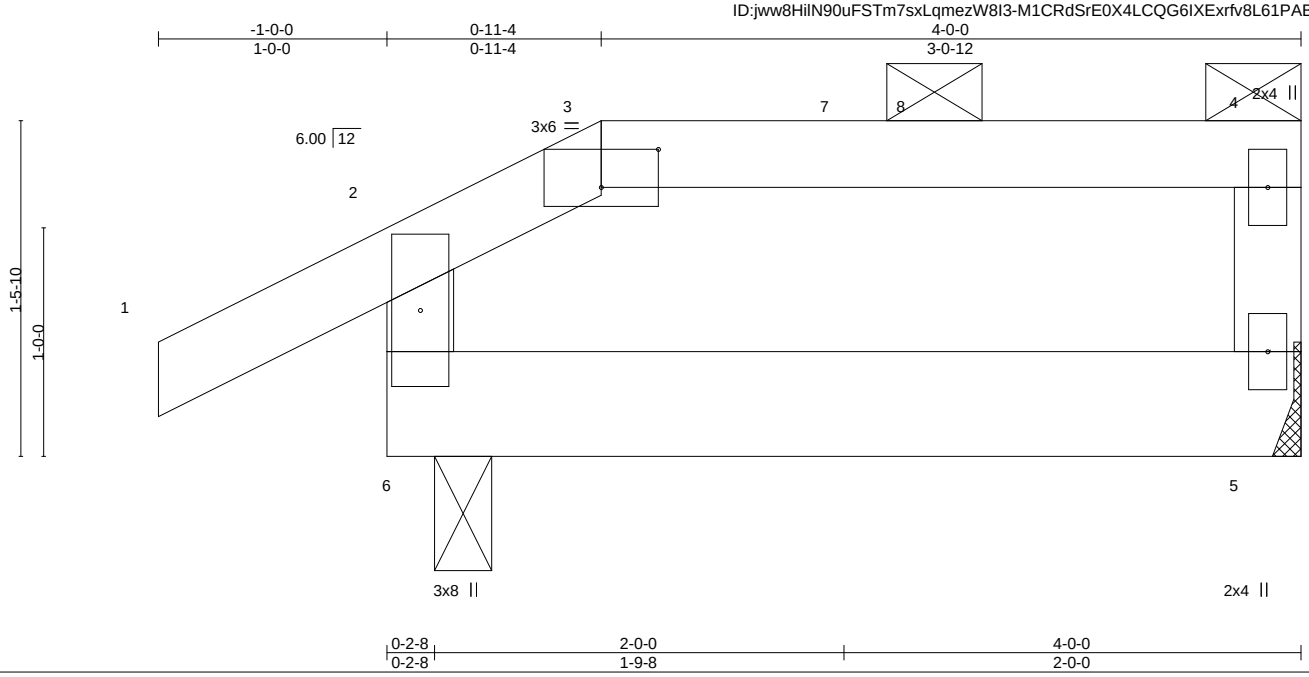

Plate Offsets (X,Y)-- [3:0-3-0,0-2-0]

LOADING (psf)		SPACING- 2-0-0		CSI.		DEFL.	in	(loc)	l/defl	L/d	PLATES	GRIP
TCLL	20.0	Plate Grip DOL	1.15	TC	0.16	Vert(LL)	-0.00	5-6	>999	360	MT20	244/190
TCDL	10.0	Lumber DOL	1.15	BC	0.07	Vert(CT)	-0.01	5-6	>999	240		
BCLL	0.0 *	Rep Stress Incr	NO	WB	0.02	Horz(CT)	0.00		n/a	n/a		
BCDL	10.0	Code IRC2015/TPI2014		Matrix-MS		Wind(LL)	0.00	5-6	>999	240	Weight: 19 lb	FT = 20%

LUMBER-
TOP CHORD 2x4 SP No.2
BOT CHORD 2x6 SP No.2
WEBS 2x4 SP No.3

BRACING-
TOP CHORD Structural wood sheathing directly applied or 4-0-0 oc purlins, except end verticals, and 2-0-0 oc purlins: 3-4.
BOT CHORD Rigid ceiling directly applied or 10-0-0 oc bracing.

REACTIONS. (size) 6=0-3-0, 5=Mechanical
Max Horz 6=27(LC 5)
Max Uplift 6=-37(LC 8), 5=-29(LC 5)
Max Grav 6=215(LC 1), 5=128(LC 20)

FORCES. (lb) - Max. Comp./Max. Ten. - All forces 250 (lb) or less except when shown.

NOTES-
1) Unbalanced roof live loads have been considered for this design.
2) Wind: ASCE 7-10; Vult=115mph Vasd=91mph; TCDL=6.0psf; BCDL=6.0psf; h=32ft; Cat. II; Exp B; Enclosed; MWFRS (envelope) gable end zone; cantilever left and right exposed ; end vertical left and right exposed; Lumber DOL=1.60 plate grip DOL=1.60
3) Provide adequate drainage to prevent water ponding.
4) This truss has been designed for a 10.0 psf bottom chord live load nonconcurrent with any other live loads.
5) * This truss has been designed for a live load of 20.0psf on the bottom chord in all areas where a rectangle 3-6-0 tall by 2-0-0 wide will fit between the bottom chord and any other members.
6) Refer to girder(s) for truss to truss connections.
7) Provide mechanical connection (by others) of truss to bearing plate capable of withstanding 100 lb uplift at joint(s) 6, 5.
8) Graphical purlin representation does not depict the size or the orientation of the purlin along the top and/or bottom chord.
9) Hanger(s) or other connection device(s) shall be provided sufficient to support concentrated load(s) 75 lb up at 2-0-12 on top chord. The design/selection of such connection device(s) is the responsibility of others.
10) In the LOAD CASE(S) section, loads applied to the face of the truss are noted as front (F) or back (B).

LOAD CASE(S) Standard
1) Dead + Roof Live (balanced): Lumber Increase=1.15, Plate Increase=1.15
Uniform Loads (plf)
Vert: 1-2=-60, 2-3=-60, 3-4=-60, 5-6=-20
Concentrated Loads (lb)
Vert: 7=27(B)

April 1,2022

ENGINEERING BY TRENCO A MiTek Affiliate
818 Soundside Road
Edenton, NC 27932

Job	Truss	Truss Type	Qty	Ply	Clearwater Farm
FARM	PB02	GABLE	1	1	I51100409 Job Reference (optional)

Builders FirstSource (Apex, NC), Apex, NC - 27523, 8.530 s Dec 6 2021 MiTek Industries, Inc. Thu Mar 31 10:15:39 2022 Page 1
ID:zbklr1dFypInNUy02maTGGyYVBm-qDmprorsnrCBqZrIsFlAOsSHIWM8vdYyfUlpm5zVRxY

9-6-0 | 19-0-0
9-6-0 | 9-6-0

Scale: 3/8"=1'

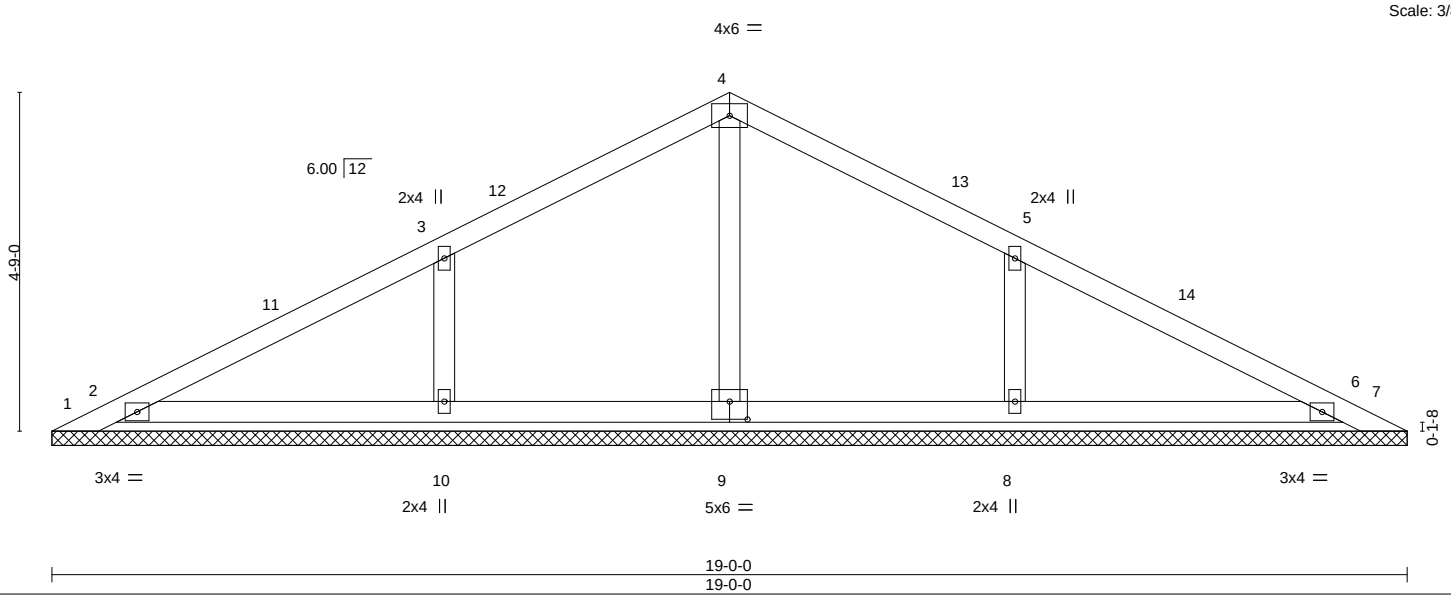

Plate Offsets (X,Y)-- [9:0-3-0,0-3-0]

LOADING (psf)		SPACING- 2-0-0		CSI.		DEFL.	in	(loc)	l/defl	L/d	PLATES	GRIP
TCLL	20.0	Plate Grip DOL	1.15	TC	0.27	Vert(LL)	n/a	-	n/a	999	MT20	244/190
TCDL	10.0	Lumber DOL	1.15	BC	0.17	Vert(CT)	n/a	-	n/a	999		
BCLL	0.0 *	Rep Stress Incr	NO	WB	0.07	Horz(CT)	0.00	6	n/a	n/a		
BCDL	10.0	Code IRC2015/TPI2014		Matrix-S							Weight: 69 lb	FT = 20%

LUMBER-
TOP CHORD 2x4 SP No.2
BOT CHORD 2x4 SP No.2
OTHERS 2x4 SP No.3

BRACING-
TOP CHORD Structural wood sheathing directly applied or 6-0-0 oc purlins.
BOT CHORD Rigid ceiling directly applied or 10-0-0 oc bracing.

REACTIONS. All bearings 19-0-0.
(lb) - Max Horz 1=61(LC 12)
Max Uplift All uplift 100 lb or less at joint(s) 2, 10, 8, 6 except 1=-157(LC 1), 7=-157(LC 1)
Max Grav All reactions 250 lb or less at joint(s) 1, 7 except 2=389(LC 1), 9=257(LC 1), 10=380(LC 23), 8=380(LC 24), 6=389(LC 1)

FORCES. (lb) - Max. Comp./Max. Ten. - All forces 250 (lb) or less except when shown.
WEBS 3-10=-283/177, 5-8=-283/177

NOTES-
1) Unbalanced roof live loads have been considered for this design.
2) Wind: ASCE 7-10; Vult=115mph Vasd=91mph; TCDL=6.0psf; BCDL=6.0psf; h=32ft; Cat. II; Exp B; Enclosed; MWFRS (envelope) gable end zone and C-C Corner(3) 0-3-15 to 3-3-15, Exterior(2) 3-3-15 to 9-6-0, Corner(3) 9-6-0 to 12-6-0, Exterior(2) 12-6-0 to 18-8-1 zone; cantilever left and right exposed ; end vertical left and right exposed;C-C for members and forces & MWFRS for reactions shown; Lumber DOL=1.60 plate grip DOL=1.60
3) Truss designed for wind loads in the plane of the truss only. For studs exposed to wind (normal to the face), see Standard Industry Gable End Details as applicable, or consult qualified building designer as per ANSI/TPI 1.
4) Gable requires continuous bottom chord bearing.
5) Gable studs spaced at 4-0-0 oc.
6) This truss has been designed for a 10.0 psf bottom chord live load nonconcurrent with any other live loads.
7) * This truss has been designed for a live load of 20.0psf on the bottom chord in all areas where a rectangle 3-6-0 tall by 2-0-0 wide will fit between the bottom chord and any other members.
8) Provide mechanical connection (by others) of truss to bearing plate capable of withstanding 100 lb uplift at joint(s) 2, 10, 8, 6 except (jt=lb) 1=157, 7=157.
9) See Standard Industry Piggyback Truss Connection Detail for Connection to base truss as applicable, or consult qualified building designer.

April 1,2022

ENGINEERING BY TRENCO A MiTek Affiliate
818 Soundside Road
Edenton, NC 27932

Job	Truss	Truss Type	Qty	Ply	Clearwater Farm
FARM	PB02G	GABLE	1	1	I51100410 Job Reference (optional)

Builders FirstSource (Apex, NC), Apex, NC - 27523, 8.530 s Dec 6 2021 MiTek Industries, Inc. Thu Mar 31 10:15:41 2022 Page 1
ID:zbkIr1dFypInNUy02maTGGyYVBm-mctaGUt6JSSv3t?h_fneTHXgkJ3SNYZF6nEwrzzVRxW

9-6-0 | 19-0-0
9-6-0 | 9-6-0

Scale: 3/8"=1'

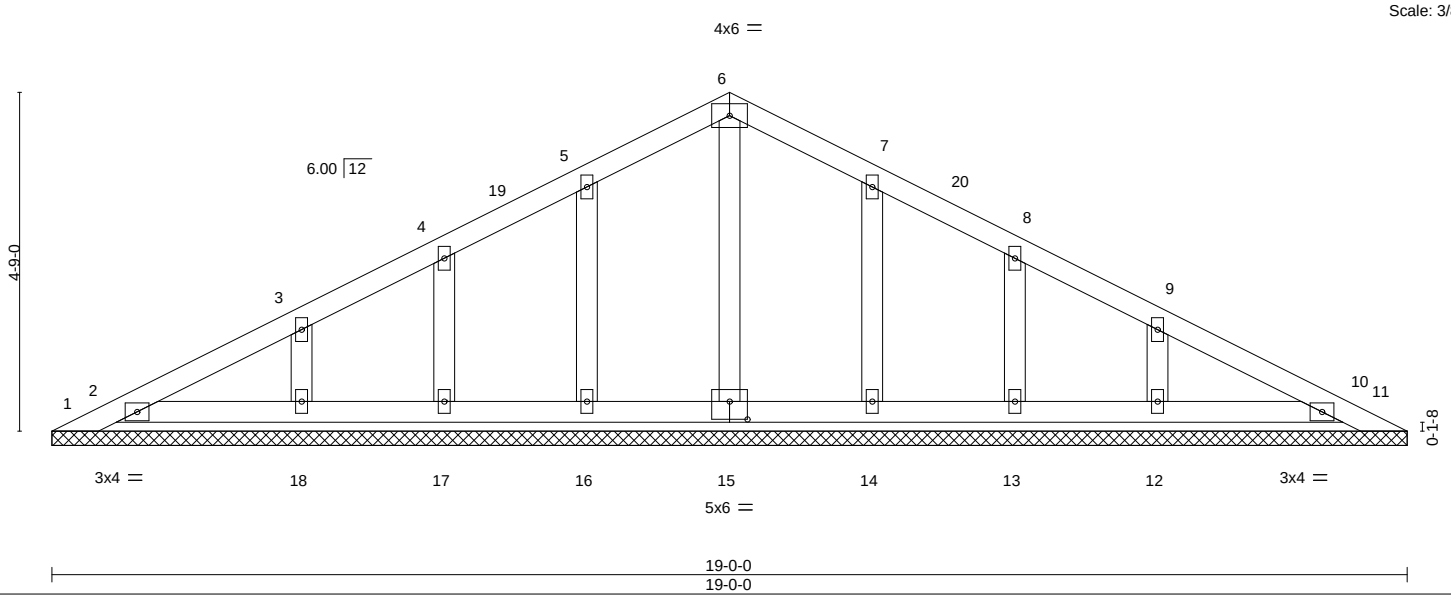

19-0-0
19-0-0

Plate Offsets (X,Y)-- [15:0-3-0,0-3-0]

LOADING (psf)		SPACING- 2-0-0		CSI.		DEFL.	in	(loc)	l/defl	L/d	PLATES	GRIP
TCLL	20.0	Plate Grip DOL	1.15	TC	0.09	Vert(LL)	n/a	-	n/a	999	MT20	244/190
TCDL	10.0	Lumber DOL	1.15	BC	0.05	Vert(CT)	n/a	-	n/a	999		
BCLL	0.0 *	Rep Stress Incr	NO	WB	0.04	Horz(CT)	0.00	10	n/a	n/a		
BCDL	10.0	Code IRC2015/TPI2014		Matrix-S							Weight: 82 lb	FT = 20%

LUMBER-
TOP CHORD 2x4 SP No.2
BOT CHORD 2x4 SP No.2
OTHERS 2x4 SP No.3

BRACING-
TOP CHORD Structural wood sheathing directly applied or 6-0-0 oc purlins.
BOT CHORD Rigid ceiling directly applied or 10-0-0 oc bracing.

REACTIONS. All bearings 19-0-0.
(lb) - Max Horz 1=61(LC 12)
Max Uplift All uplift 100 lb or less at joint(s) 1, 11, 2, 16, 17, 18, 14, 13, 12, 10
Max Grav All reactions 250 lb or less at joint(s) 1, 11, 2, 15, 16, 17, 18, 14, 13, 12, 10

FORCES. (lb) - Max. Comp./Max. Ten. - All forces 250 (lb) or less except when shown.

NOTES-
1) Unbalanced roof live loads have been considered for this design.
2) Wind: ASCE 7-10; Vult=115mph Vasd=91mph; TCDL=6.0psf; BCDL=6.0psf; h=32ft; Cat. II; Exp B; Enclosed; MWFRS (envelope) gable end zone and C-C Corner(3) 0-3-15 to 3-6-0, Exterior(2) 3-6-0 to 9-6-0, Corner(3) 9-6-0 to 12-6-0, Exterior(2) 12-6-0 to 18-8-1 zone; cantilever left and right exposed ; end vertical left and right exposed;C-C for members and forces & MWFRS for reactions shown; Lumber DOL=1.60 plate grip DOL=1.60
3) Truss designed for wind loads in the plane of the truss only. For studs exposed to wind (normal to the face), see Standard Industry Gable End Details as applicable, or consult qualified building designer as per ANSI/TPI 1.
4) All plates are 2x4 MT20 unless otherwise indicated.
5) Gable requires continuous bottom chord bearing.
6) Gable studs spaced at 2-0-0 oc.
7) This truss has been designed for a 10.0 psf bottom chord live load nonconcurrent with any other live loads.
8) * This truss has been designed for a live load of 20.0psf on the bottom chord in all areas where a rectangle 3-6-0 tall by 2-0-0 wide will fit between the bottom chord and any other members.
9) Provide mechanical connection (by others) of truss to bearing plate capable of withstanding 100 lb uplift at joint(s) 1, 11, 2, 16, 17, 18, 14, 13, 12, 10.
10) See Standard Industry Piggyback Truss Connection Detail for Connection to base truss as applicable, or consult qualified building designer.

April 1,2022

ENGINEERING BY TRENCO A MiTek Affiliate
818 Soundside Road
Edenton, NC 27932

Job	Truss	Truss Type	Qty	Ply	Clearwater Farm
FARM	PB03	GABLE	1	1	I51100411 Job Reference (optional)

Builders FirstSource (Apex, NC), Apex, NC - 27523, 8.530 s Dec 6 2021 MiTek Industries, Inc. Thu Mar 31 10:15:42 2022 Page 1
ID:zbklr1dFypInNUy02maTGGyYVBm-EoRyTpuk4mamh1atXNIt0V4oZjNv6zFPLRzUNPzVRxV

9-6-0 | 16-8-0
9-6-0 | 7-2-0

Scale = 1:30.9

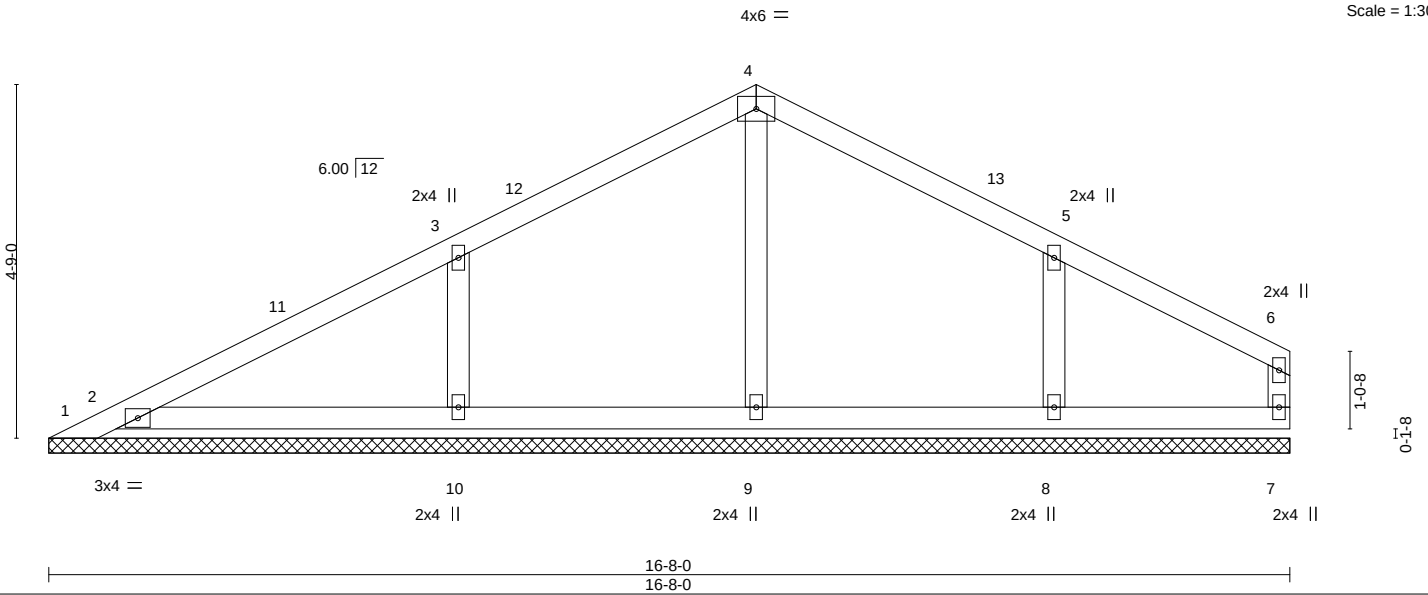

LOADING (psf)		SPACING- 2-0-0		CSI.		DEFL.	in	(loc)	l/defl	L/d	PLATES	GRIP
TCLL	20.0	Plate Grip DOL	1.15	TC	0.27	Vert(LL)	n/a	-	n/a	999	MT20	244/190
TCDL	10.0	Lumber DOL	1.15	BC	0.16	Vert(CT)	n/a	-	n/a	999		
BCLL	0.0 *	Rep Stress Incr	NO	WB	0.07	Horz(CT)	0.00	7	n/a	n/a		
BCDL	10.0	Code IRC2015/TPI2014		Matrix-S							Weight: 64 lb	FT = 20%

LUMBER-
TOP CHORD 2x4 SP No.2
BOT CHORD 2x4 SP No.2
WEBS 2x4 SP No.3
OTHERS 2x4 SP No.3

BRACING-
TOP CHORD Structural wood sheathing directly applied or 6-0-0 oc purlins, except end verticals.
BOT CHORD Rigid ceiling directly applied or 10-0-0 oc bracing.

REACTIONS. All bearings 16-8-0.
(lb) - Max Horz 1=68(LC 12)
Max Uplift All uplift 100 lb or less at joint(s) 7, 2, 10, 8 except 1=-158(LC 1)
Max Grav All reactions 250 lb or less at joint(s) 1, 7 except 2=392(LC 1), 9=267(LC 1), 10=378(LC 23), 8=327(LC 24)

FORCES. (lb) - Max. Comp./Max. Ten. - All forces 250 (lb) or less except when shown.
WEBS 3-10=-282/182

NOTES-
1) Unbalanced roof live loads have been considered for this design.
2) Wind: ASCE 7-10; Vult=115mph Vasd=91mph; TCDL=6.0psf; BCDL=6.0psf; h=32ft; Cat. II; Exp B; Enclosed; MWFRS (envelope) gable end zone and C-C Corner(3) 0-3-15 to 3-3-15, Exterior(2) 3-3-15 to 9-6-0, Corner(3) 9-6-0 to 12-6-0, Exterior(2) 12-6-0 to 16-6-4 zone; cantilever left and right exposed ; end vertical left and right exposed;C-C for members and forces & MWFRS for reactions shown; Lumber DOL=1.60 plate grip DOL=1.60
3) Truss designed for wind loads in the plane of the truss only. For studs exposed to wind (normal to the face), see Standard Industry Gable End Details as applicable, or consult qualified building designer as per ANSI/TPI 1.
4) Gable requires continuous bottom chord bearing.
5) Gable studs spaced at 4-0-0 oc.
6) This truss has been designed for a 10.0 psf bottom chord live load nonconcurrent with any other live loads.
7) * This truss has been designed for a live load of 20.0psf on the bottom chord in all areas where a rectangle 3-6-0 tall by 2-0-0 wide will fit between the bottom chord and any other members.
8) Provide mechanical connection (by others) of truss to bearing plate capable of withstanding 100 lb uplift at joint(s) 7, 2, 10, 8 except (jt=lb) 1=158.
9) See Standard Industry Piggyback Truss Connection Detail for Connection to base truss as applicable, or consult qualified building designer.

April 1,2022

ENGINEERING BY TRENCO A MiTek Affiliate
818 Soundside Road
Edenton, NC 27932

Job	Truss	Truss Type	Qty	Ply	Clearwater Farm
FARM	V01	GABLE	1	1	I51100412 Job Reference (optional)

Builders FirstSource (Apex, NC), Apex, NC - 27523, 8.530 s Dec 6 2021 MiTek Industries, Inc. Thu Mar 31 10:15:43 2022 Page 1
ID:zbkIr1dFypInNUy02maTGGyYVBm-i_?Kh9uMr3idIB9354q6Yidtu7eMrQZYa5j1vszVRxU

5-10-14 | 11-9-12
5-10-14 | 5-10-14

Scale = 1:20.2

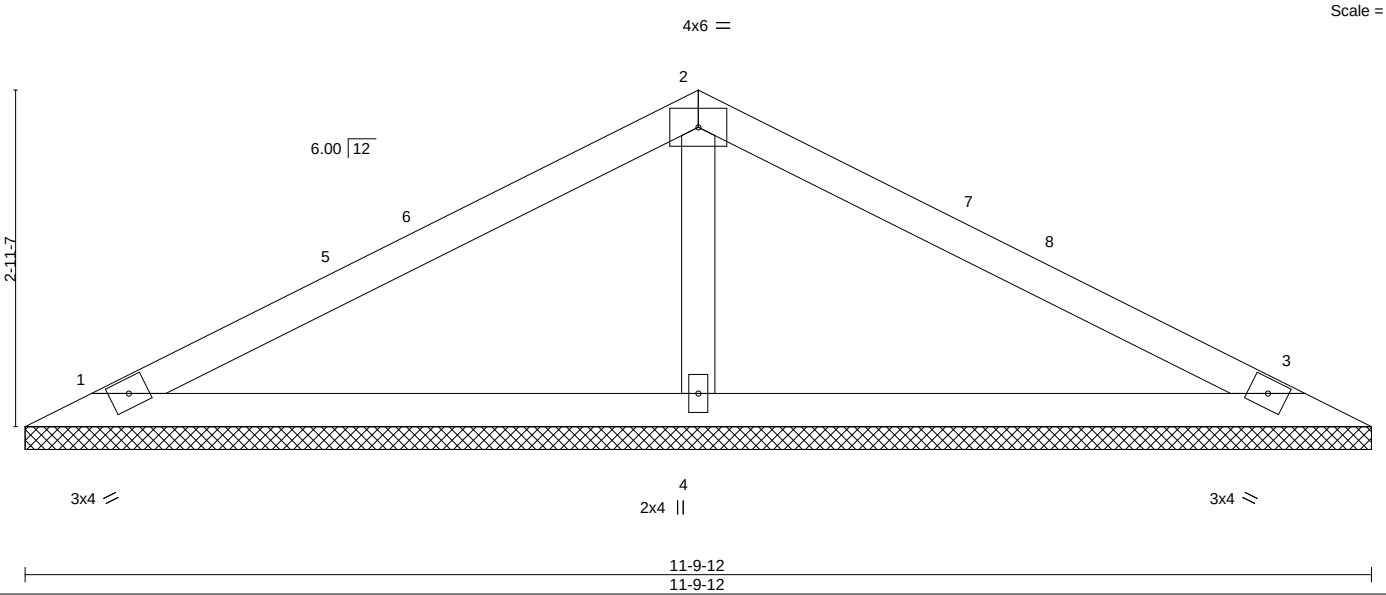

LOADING (psf)		SPACING- 2-0-0		CSI.		DEFL.	in	(loc)	l/defl	L/d	PLATES	GRIP
TCLL	20.0	Plate Grip DOL	1.15	TC	0.68	Vert(LL)	n/a	-	n/a	999	MT20	244/190
TCDL	10.0	Lumber DOL	1.15	BC	0.47	Vert(CT)	n/a	-	n/a	999		
BCLL	0.0 *	Rep Stress Incr	YES	WB	0.07	Horz(CT)	0.00	3	n/a	n/a		
BCDL	10.0	Code IRC2015/TPI2014		Matrix-S							Weight: 39 lb	FT = 20%

LUMBER-
TOP CHORD 2x4 SP No.3
BOT CHORD 2x4 SP No.3
OTHERS 2x4 SP No.3

BRACING-
TOP CHORD Structural wood sheathing directly applied or 6-0-0 oc purlins.
BOT CHORD Rigid ceiling directly applied or 10-0-0 oc bracing.

REACTIONS. (size) 1=11-9-12, 3=11-9-12, 4=11-9-12
Max Horz 1=-35(LC 17)
Max Uplift 1=-20(LC 12), 3=-26(LC 13)
Max Grav 1=194(LC 23), 3=194(LC 24), 4=463(LC 1)

FORCES. (lb) - Max. Comp./Max. Ten. - All forces 250 (lb) or less except when shown.
WEBS 2-4=-308/87

NOTES-
1) Unbalanced roof live loads have been considered for this design.
2) Wind: ASCE 7-10; Vult=115mph Vasd=91mph; TCDL=6.0psf; BCDL=6.0psf; h=32ft; Cat. II; Exp B; Enclosed; MWFRS (envelope) gable end zone and C-C Exterior(2) 0-7-7 to 3-7-7, Interior(1) 3-7-7 to 5-10-14, Exterior(2) 5-10-14 to 8-10-14, Interior(1) 8-10-14 to 11-2-6 zone; cantilever left and right exposed ; end vertical left and right exposed;C-C for members and forces & MWFRS for reactions shown; Lumber DOL=1.60 plate grip DOL=1.60
3) Gable requires continuous bottom chord bearing.
4) This truss has been designed for a 10.0 psf bottom chord live load nonconcurrent with any other live loads.
5) * This truss has been designed for a live load of 20.0psf on the bottom chord in all areas where a rectangle 3-6-0 tall by 2-0-0 wide will fit between the bottom chord and any other members.
6) Provide mechanical connection (by others) of truss to bearing plate capable of withstanding 100 lb uplift at joint(s) 1, 3.

April 1,2022

ENGINEERING BY TRENCO A MiTek Affiliate
818 Soundside Road
Edenton, NC 27932

Job	Truss	Truss Type	Qty	Ply	Clearwater Farm
FARM	V02	VALLEY	1	1	I51100413 Job Reference (optional)

Builders FirstSource (Apex, NC), Apex, NC - 27523, 8.530 s Dec 6 2021 MiTek Industries, Inc. Thu Mar 31 10:15:44 2022 Page 1
ID:zbkIr1dFypInNUy02maTGGyYVBm-BBZiuVv_cNqUwLkFfoLL5v98VX34auJhplSaRIzVRxT

3-10-14 | 7-9-12
3-10-14 | 3-10-14

Scale = 1:14.5

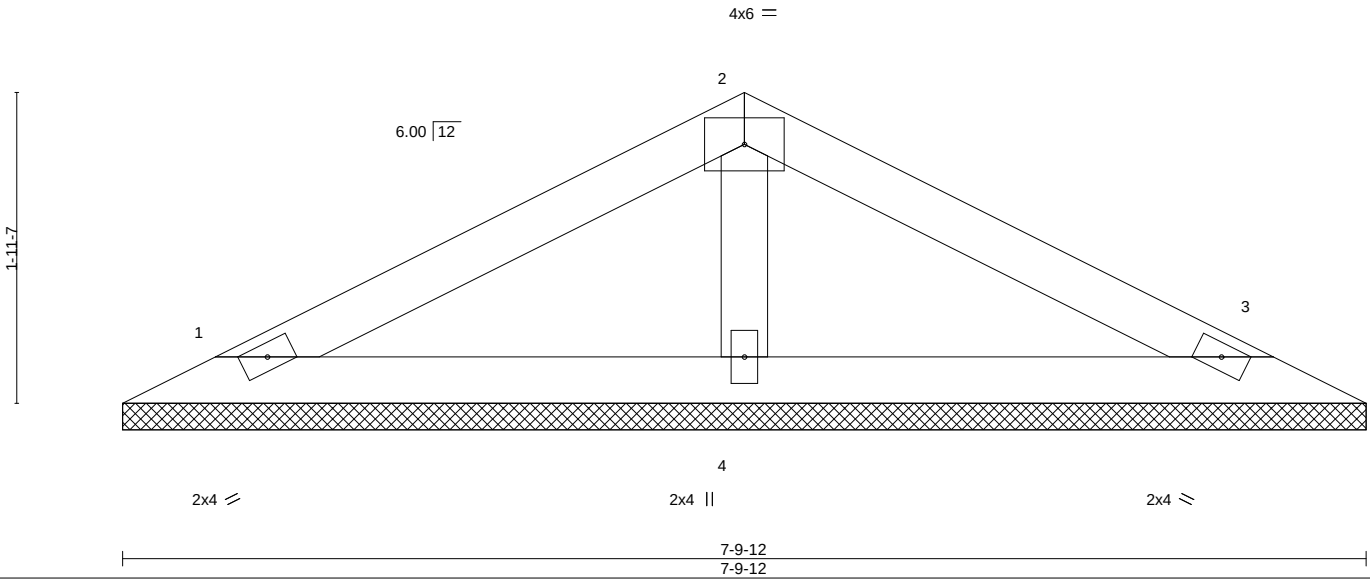

LOADING (psf)		SPACING- 2-0-0		CSI.		DEFL.	in	(loc)	l/defl	L/d	PLATES	GRIP
TCLL	20.0	Plate Grip DOL	1.15	TC	0.24	Vert(LL)	n/a	-	n/a	999	MT20	244/190
TCDL	10.0	Lumber DOL	1.15	BC	0.18	Vert(CT)	n/a	-	n/a	999		
BCLL	0.0 *	Rep Stress Incr	YES	WB	0.04	Horz(CT)	0.00	3	n/a	n/a		
BCDL	10.0	Code IRC2015/TPI2014		Matrix-S							Weight: 25 lb	FT = 20%

LUMBER-
TOP CHORD 2x4 SP No.3
BOT CHORD 2x4 SP No.3
OTHERS 2x4 SP No.3

BRACING-
TOP CHORD Structural wood sheathing directly applied or 6-0-0 oc purlins.
BOT CHORD Rigid ceiling directly applied or 10-0-0 oc bracing.

REACTIONS. (size) 1=7-9-12, 3=7-9-12, 4=7-9-12
Max Horz 1=22(LC 12)
Max Uplift 1=-12(LC 12), 3=-16(LC 13)
Max Grav 1=121(LC 23), 3=121(LC 24), 4=288(LC 1)

FORCES. (lb) - Max. Comp./Max. Ten. - All forces 250 (lb) or less except when shown.

NOTES-
1) Unbalanced roof live loads have been considered for this design.
2) Wind: ASCE 7-10; Vult=115mph Vasd=91mph; TCDL=6.0psf; BCDL=6.0psf; h=32ft; Cat. II; Exp B; Enclosed; MWFRS (envelope) gable end zone and C-C Exterior(2) zone; cantilever left and right exposed ; end vertical left and right exposed;C-C for members and forces & MWFRS for reactions shown; Lumber DOL=1.60 plate grip DOL=1.60
3) Gable requires continuous bottom chord bearing.
4) This truss has been designed for a 10.0 psf bottom chord live load nonconcurrent with any other live loads.
5) * This truss has been designed for a live load of 20.0psf on the bottom chord in all areas where a rectangle 3-6-0 tall by 2-0-0 wide will fit between the bottom chord and any other members.
6) Provide mechanical connection (by others) of truss to bearing plate capable of withstanding 100 lb uplift at joint(s) 1, 3.

NORTH CAROLINA PROFESSIONAL SEAL 036322 ENGINEER ERIC A. GILBERT

April 1,2022

ENGINEERING BY TRENCO A MiTek Affiliate
818 Soundside Road
Edenton, NC 27932

Job	Truss	Truss Type	Qty	Ply	Clearwater Farm
FARM	V03	VALLEY	1	1	I51100414 Job Reference (optional)

Builders FirstSource (Apex, NC), Apex, NC - 27523, 8.530 s Dec 6 2021 MiTek Industries, Inc. Thu Mar 31 10:15:44 2022 Page 1
ID:zbkIr1dFypInNUy02maTGGyYVBm-BBZiuVv_cNqUwLkFfoLL5v9BcX3qauvhplSaRIzVRxT

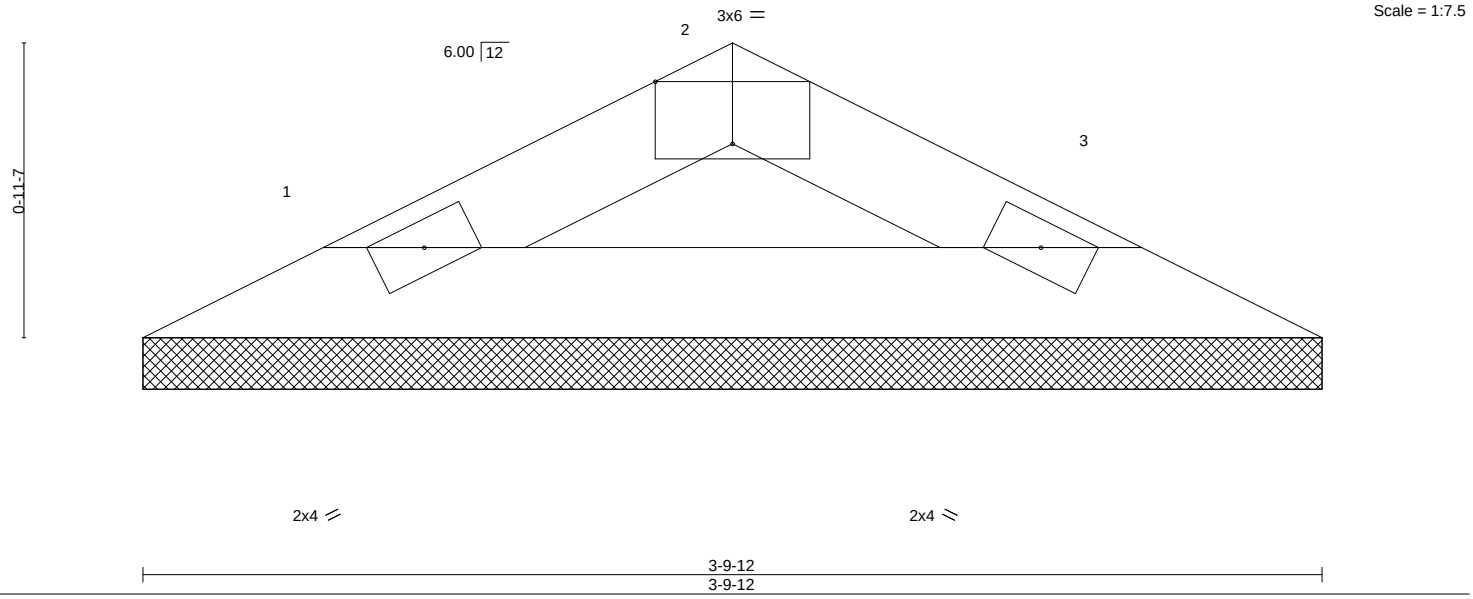

Plate Offsets (X,Y)-- [2:0-3-0,Edge]

LOADING (psf)		SPACING- 2-0-0		CSI.		DEFL. in (loc) l/defl L/d		PLATES	GRIP
TCLL	20.0	Plate Grip DOL	1.15	TC	0.04	Vert(LL) n/a - n/a 999		MT20	244/190
TCDL	10.0	Lumber DOL	1.15	BC	0.13	Vert(CT) n/a - n/a 999			
BCLL	0.0 *	Rep Stress Incr	YES	WB	0.00	Horz(CT) 0.00 3 n/a n/a			
BCDL	10.0	Code IRC2015/TPI2014		Matrix-P				Weight: 10 lb	FT = 20%

LUMBER-
TOP CHORD 2x4 SP No.3
BOT CHORD 2x4 SP No.3

BRACING-
TOP CHORD Structural wood sheathing directly applied or 3-9-12 oc purlins.
BOT CHORD Rigid ceiling directly applied or 10-0-0 oc bracing.

REACTIONS. (size) 1=3-9-12, 3=3-9-12
Max Horz 1=9(LC 16)
Max Uplift 1=-3(LC 12), 3=-3(LC 13)
Max Grav 1=103(LC 1), 3=103(LC 1)

FORCES. (lb) - Max. Comp./Max. Ten. - All forces 250 (lb) or less except when shown.

NOTES-
1) Unbalanced roof live loads have been considered for this design.
2) Wind: ASCE 7-10; Vult=115mph Vasd=91mph; TCDL=6.0psf; BCDL=6.0psf; h=32ft; Cat. II; Exp B; Enclosed; MWFRS (envelope) gable end zone and C-C Exterior(2) zone; cantilever left and right exposed ; end vertical left and right exposed;C-C for members and forces & MWFRS for reactions shown; Lumber DOL=1.60 plate grip DOL=1.60
3) Gable requires continuous bottom chord bearing.
4) This truss has been designed for a 10.0 psf bottom chord live load nonconcurrent with any other live loads.
5) * This truss has been designed for a live load of 20.0psf on the bottom chord in all areas where a rectangle 3-6-0 tall by 2-0-0 wide will fit between the bottom chord and any other members.
6) Provide mechanical connection (by others) of truss to bearing plate capable of withstanding 100 lb uplift at joint(s) 1, 3.

April 1,2022

ENGINEERING BY TRENCO A MiTek Affiliate
818 Soundside Road
Edenton, NC 27932

Job	Truss	Truss Type	Qty	Ply	Clearwater Farm
FARM	V04	GABLE	1	1	I51100415 Job Reference (optional)

Builders FirstSource (Apex, NC), Apex, NC - 27523, 8.530 s Dec 6 2021 MiTek Industries, Inc. Thu Mar 31 10:15:45 2022 Page 1
ID:zbkIr1dFypInNUy02maTGGyYVBm-fN755rwdNhyLYUJSDVsad7iFtxM0JI_r1PC8_kzVRxS

Scale = 1:49.2

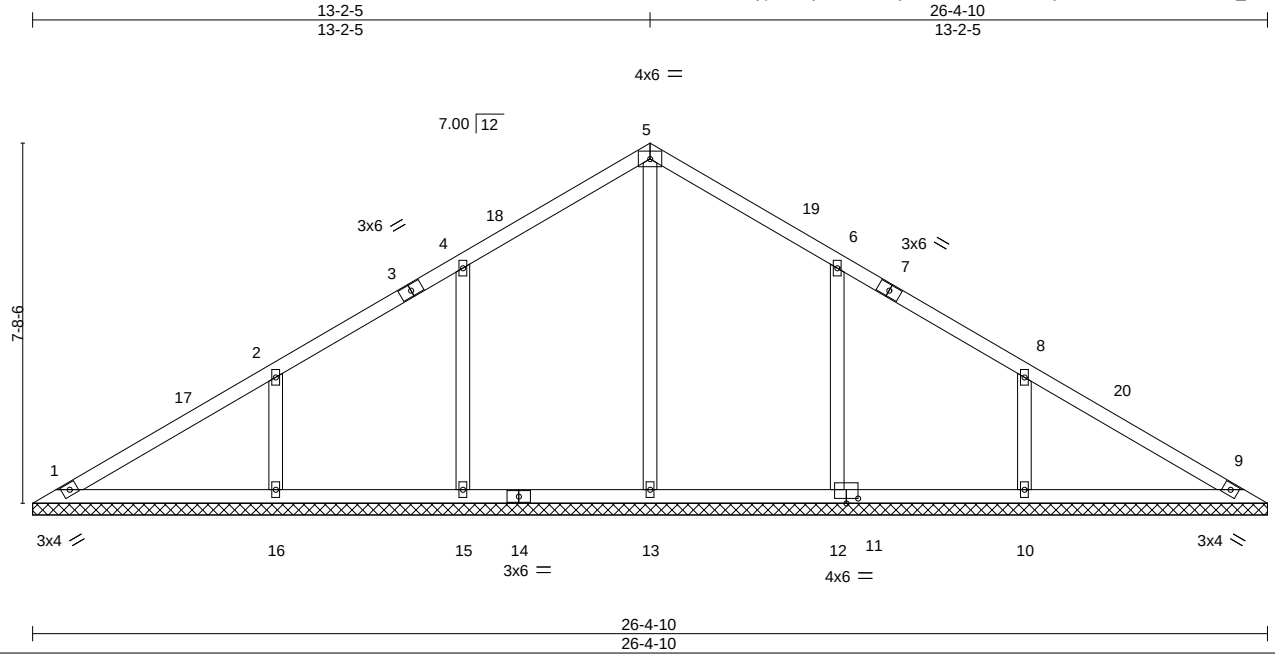

Plate Offsets (X,Y)-- [12:0-3-0,0-1-4]

LOADING (psf)		SPACING- 2-0-0		CSI.		DEFL.	in	(loc)	l/defl	L/d	PLATES	GRIP
TCLL	20.0	Plate Grip DOL	1.15	TC	0.46	Vert(LL)	n/a	-	n/a	999	MT20	244/190
TCDL	10.0	Lumber DOL	1.15	BC	0.33	Vert(CT)	n/a	-	n/a	999		
BCLL	0.0 *	Rep Stress Incr	YES	WB	0.20	Horz(CT)	0.00	9	n/a	n/a		
BCDL	10.0	Code IRC2015/TPI2014		Matrix-S							Weight: 115 lb	FT = 20%

LUMBER-
TOP CHORD 2x4 SP No.3
BOT CHORD 2x4 SP No.3
OTHERS 2x4 SP No.3

BRACING-
TOP CHORD Structural wood sheathing directly applied or 6-0-0 oc purlins.
BOT CHORD Rigid ceiling directly applied or 10-0-0 oc bracing.

REACTIONS. All bearings 26-4-10.
(lb) - Max Horz 1=146(LC 9)
Max Uplift All uplift 100 lb or less at joint(s) 1, 15, 16, 12, 10
Max Grav All reactions 250 lb or less at joint(s) 1, 9 except 13=405(LC 22), 15=374(LC 19), 16=399(LC 1), 12=374(LC 20), 10=399(LC 1)

FORCES. (lb) - Max. Comp./Max. Ten. - All forces 250 (lb) or less except when shown.
WEBS 2-16=-295/137, 8-10=-295/137

NOTES-
1) Unbalanced roof live loads have been considered for this design.
2) Wind: ASCE 7-10; Vult=115mph Vasd=91mph; TCDL=6.0psf; BCDL=6.0psf; h=32ft; Cat. II; Exp B; Enclosed; MWFRS (envelope) gable end zone and C-C Exterior(2) 0-6-8 to 3-6-8, Interior(1) 3-6-8 to 13-2-5, Exterior(2) 13-2-5 to 16-2-5, Interior(1) 16-2-5 to 25-10-3 zone; cantilever left and right exposed ; end vertical left and right exposed;C-C for members and forces & MWFRS for reactions shown; Lumber DOL=1.60 plate grip DOL=1.60
3) All plates are 2x4 MT20 unless otherwise indicated.
4) Gable requires continuous bottom chord bearing.
5) This truss has been designed for a 10.0 psf bottom chord live load nonconcurrent with any other live loads.
6) * This truss has been designed for a live load of 20.0psf on the bottom chord in all areas where a rectangle 3-6-0 tall by 2-0-0 wide will fit between the bottom chord and any other members, with BCDL = 10.0psf.
7) Provide mechanical connection (by others) of truss to bearing plate capable of withstanding 100 lb uplift at joint(s) 1, 15, 16, 12, 10.

April 1,2022

ENGINEERING BY TRENCO A MiTek Affiliate
818 Soundside Road
Edenton, NC 27932

Job	Truss	Truss Type	Qty	Ply	Clearwater Farm
FARM	V05	GABLE	1	1	I51100416
					Job Reference (optional)

Builders FirstSource (Apex, NC), Apex, NC - 27523, 8.530 s Dec 6 2021 MiTek Industries, Inc. Thu Mar 31 10:15:47 2022 Page 1
ID:zbkIr1dFypInNUy02maTGGyYVBm-bmFrWXytvIC3noSqKwu2jYnd3k2dnDM8VjhE2dzVRxQ

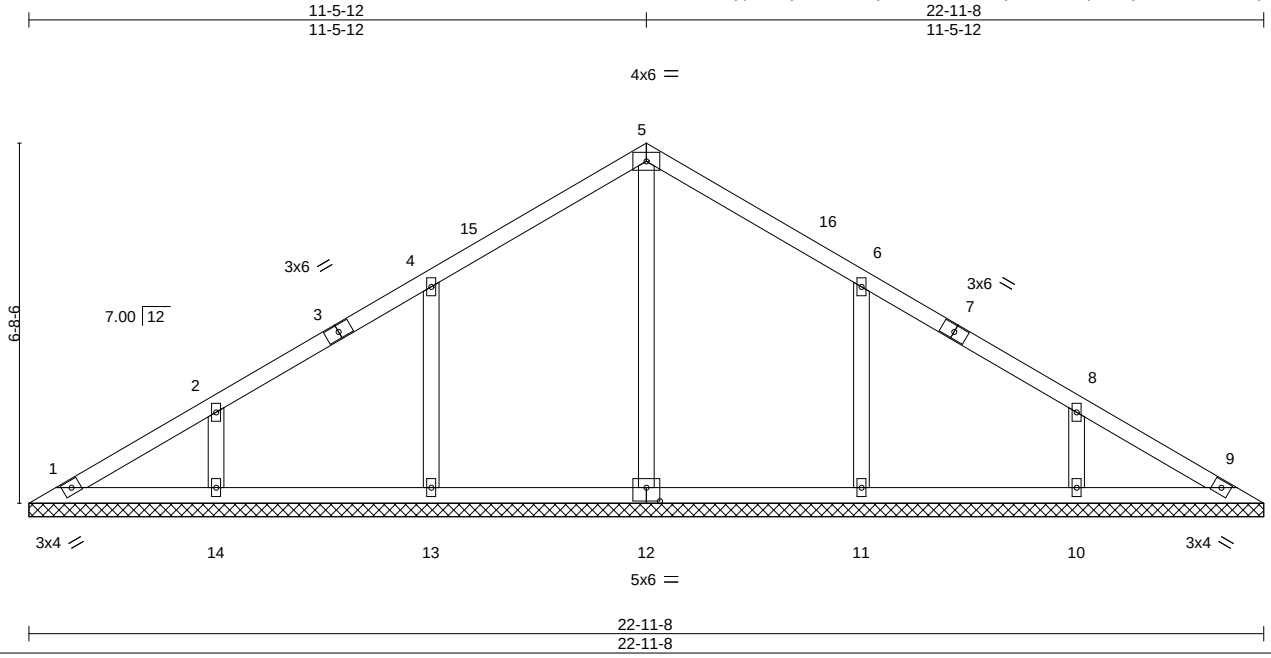

Plate Offsets (X,Y)-- [12:0-3-0,0-3-0]

LOADING (psf)		SPACING-	2-0-0	CSI.		DEFL.	in	(loc)	l/defl	L/d	PLATES	GRIP
TCLL	20.0	Plate Grip DOL	1.15	TC	0.35	Vert(LL)	n/a	-	n/a	999	MT20	244/190
TCDL	10.0	Lumber DOL	1.15	BC	0.32	Vert(CT)	n/a	-	n/a	999		
BCLL	0.0 *	Rep Stress Incr	YES	WB	0.15	Horz(CT)	0.00	9	n/a	n/a		
BCDL	10.0	Code IRC2015/TPI2014		Matrix-S							Weight: 97 lb	FT = 20%

LUMBER-
TOP CHORD 2x4 SP No.3
BOT CHORD 2x4 SP No.3
OTHERS 2x4 SP No.3

BRACING-
TOP CHORD Structural wood sheathing directly applied or 6-0-0 oc purlins.
BOT CHORD Rigid ceiling directly applied or 10-0-0 oc bracing.

REACTIONS. All bearings 22-11-8.
(lb) - Max Horz 1=126(LC 9)
Max Uplift All uplift 100 lb or less at joint(s) 1, 13, 14, 11, 10
Max Grav All reactions 250 lb or less at joint(s) 1, 9 except 12=388(LC 19), 13=404(LC 19), 14=304(LC 1), 11=404(LC 20), 10=304(LC 1)

FORCES. (lb) - Max. Comp./Max. Ten. - All forces 250 (lb) or less except when shown.
WEBS 4-13=-266/128, 6-11=-266/128

NOTES-
1) Unbalanced roof live loads have been considered for this design.
2) Wind: ASCE 7-10; Vult=115mph Vasd=91mph; TCDL=6.0psf; BCDL=6.0psf; h=32ft; Cat. II; Exp B; Enclosed; MWFRS (envelope) gable end zone and C-C Exterior(2) 0-6-8 to 3-5-12, Interior(1) 3-5-12 to 11-5-12, Exterior(2) 11-5-12 to 14-5-12, Interior(1) 14-5-12 to 22-5-1 zone; cantilever left and right exposed ; end vertical left and right exposed;C-C for members and forces & MWFRS for reactions shown; Lumber DOL=1.60 plate grip DOL=1.60
3) All plates are 2x4 MT20 unless otherwise indicated.
4) Gable requires continuous bottom chord bearing.
5) This truss has been designed for a 10.0 psf bottom chord live load nonconcurrent with any other live loads.
6) * This truss has been designed for a live load of 20.0psf on the bottom chord in all areas where a rectangle 3-6-0 tall by 2-0-0 wide will fit between the bottom chord and any other members, with BCDL = 10.0psf.
7) Provide mechanical connection (by others) of truss to bearing plate capable of withstanding 100 lb uplift at joint(s) 1, 13, 14, 11, 10.

April 1,2022

ENGINEERING BY TRENCO A MiTek Affiliate
818 Soundside Road
Edenton, NC 27932

Job	Truss	Truss Type	Qty	Ply	Clearwater Farm
FARM	V06	GABLE	1	1	I51100417 Job Reference (optional)

Builders FirstSource (Apex, NC), Apex, NC - 27523, 8.530 s Dec 6 2021 MiTek Industries, Inc. Thu Mar 31 10:15:48 2022 Page 1
ID:zbkIr1dFypInNUy02maTGGyYVBm-3yoDktyVfcLwPy11udPHFlKkx8N3WhYHjNQoa3zVRxP

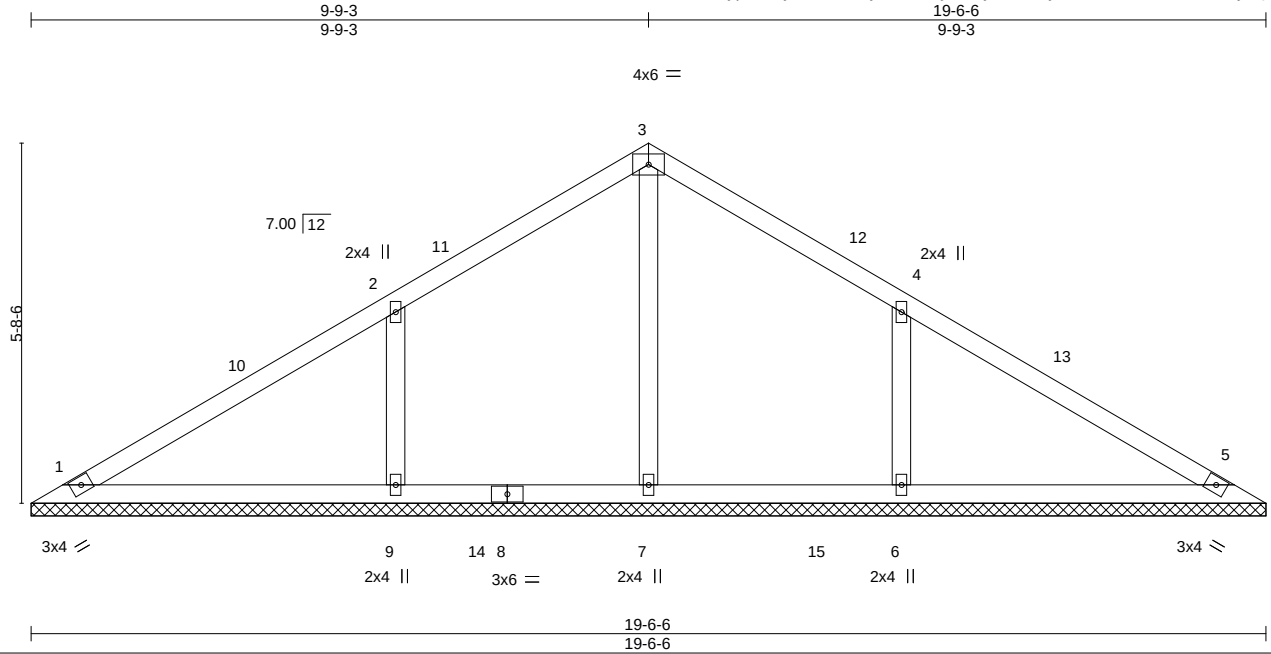

LOADING (psf)		SPACING-	2-0-0	CSI.		DEFL.	in	(loc)	l/defl	L/d	PLATES	GRIP
TCLL	20.0	Plate Grip DOL	1.15	TC	0.60	Vert(LL)	n/a	-	n/a	999	MT20	244/190
TCDL	10.0	Lumber DOL	1.15	BC	0.37	Vert(CT)	n/a	-	n/a	999		
BCLL	0.0 *	Rep Stress Incr	YES	WB	0.09	Horz(CT)	0.00	5	n/a	n/a		
BCDL	10.0	Code IRC2015/TPI2014		Matrix-S							Weight: 77 lb	FT = 20%

LUMBER-
TOP CHORD 2x4 SP No.3
BOT CHORD 2x4 SP No.3
OTHERS 2x4 SP No.3

BRACING-
TOP CHORD Structural wood sheathing directly applied or 6-0-0 oc purlins.
BOT CHORD Rigid ceiling directly applied or 10-0-0 oc bracing.

REACTIONS. All bearings 19-6-6.
(lb) - Max Horz 1=-106(LC 8)
Max Uplift All uplift 100 lb or less at joint(s) 1 except 9=-101(LC 12), 6=-101(LC 13)
Max Grav All reactions 250 lb or less at joint(s) 1, 5 except 7=322(LC 22), 9=484(LC 19), 6=484(LC 20)

FORCES. (lb) - Max. Comp./Max. Ten. - All forces 250 (lb) or less except when shown.
WEBS 2-9=-340/159, 4-6=-340/159

NOTES-
1) Unbalanced roof live loads have been considered for this design.
2) Wind: ASCE 7-10; Vult=115mph Vasd=91mph; TCDL=6.0psf; BCDL=6.0psf; h=32ft; Cat. II; Exp B; Enclosed; MWFRS (envelope) gable end zone and C-C Exterior(2) 0-6-8 to 3-6-8, Interior(1) 3-6-8 to 9-9-3, Exterior(2) 9-9-3 to 12-9-3, Interior(1) 12-9-3 to 18-11-14 zone; cantilever left and right exposed ; end vertical left and right exposed;C-C for members and forces & MWFRS for reactions shown; Lumber DOL=1.60 plate grip DOL=1.60
3) Gable requires continuous bottom chord bearing.
4) This truss has been designed for a 10.0 psf bottom chord live load nonconcurrent with any other live loads.
5) * This truss has been designed for a live load of 20.0psf on the bottom chord in all areas where a rectangle 3-6-0 tall by 2-0-0 wide will fit between the bottom chord and any other members, with BCDL = 10.0psf.
6) Provide mechanical connection (by others) of truss to bearing plate capable of withstanding 100 lb uplift at joint(s) 1 except (jt=lb) 9=101, 6=101.

April 1,2022

ENGINEERING BY TRENCO A MiTek Affiliate
818 Soundside Road
Edenton, NC 27932

Job	Truss	Truss Type	Qty	Ply	Clearwater Farm
FARM	V07	GABLE	1	1	I51100418 Job Reference (optional)

Builders FirstSource (Apex, NC), Apex, NC - 27523, 8.530 s Dec 6 2021 MiTek Industries, Inc. Thu Mar 31 10:15:48 2022 Page 1
ID:zbkIr1dFypInNUy02maTGGyYVBm-3yoDktyVfcLwPy11udPHFlKoj8PpWhlHjNQoa3zVRxP

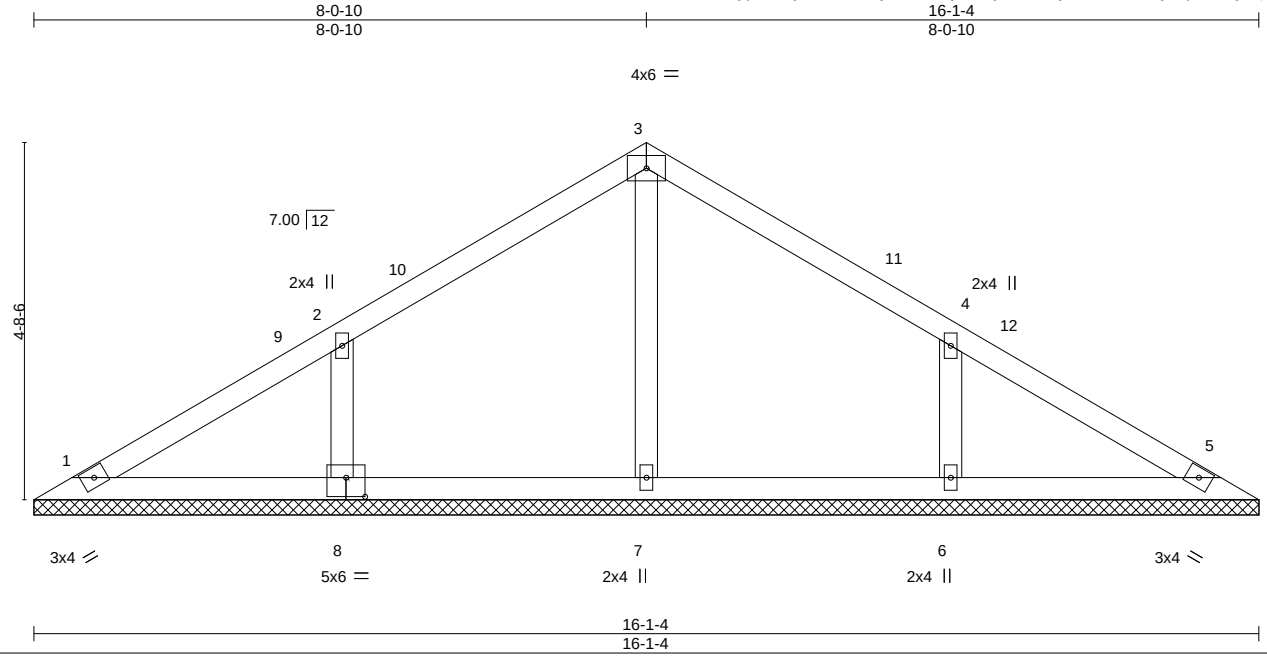

Plate Offsets (X,Y)-- [8:0-3-0,0-3-0]

LOADING (psf)		SPACING- 2-0-0		CSI.		DEFL.	in	(loc)	l/defl	L/d	PLATES	GRIP
TCLL	20.0	Plate Grip DOL	1.15	TC	0.36	Vert(LL)	n/a	-	n/a	999	MT20	244/190
TCDL	10.0	Lumber DOL	1.15	BC	0.19	Vert(CT)	n/a	-	n/a	999		
BCLL	0.0 *	Rep Stress Incr	YES	WB	0.07	Horz(CT)	0.00	5	n/a	n/a		
BCDL	10.0	Code IRC2015/TPI2014		Matrix-S							Weight: 61 lb	FT = 20%

LUMBER-
TOP CHORD 2x4 SP No.3
BOT CHORD 2x4 SP No.3
OTHERS 2x4 SP No.3

BRACING-
TOP CHORD Structural wood sheathing directly applied or 6-0-0 oc purlins.
BOT CHORD Rigid ceiling directly applied or 10-0-0 oc bracing.

REACTIONS. All bearings 16-1-4.
(lb) - Max Horz 1=86(LC 11)
Max Uplift All uplift 100 lb or less at joint(s) 1, 8, 6
Max Grav All reactions 250 lb or less at joint(s) 1, 5 except 7=261(LC 1), 8=355(LC 19), 6=359(LC 20)

FORCES. (lb) - Max. Comp./Max. Ten. - All forces 250 (lb) or less except when shown.
WEBS 2-8=-266/126, 4-6=-270/128

NOTES-
1) Unbalanced roof live loads have been considered for this design.
2) Wind: ASCE 7-10; Vult=115mph Vasd=91mph; TCDL=6.0psf; BCDL=6.0psf; h=32ft; Cat. II; Exp B; Enclosed; MWFRS (envelope) gable end zone and C-C Exterior(2) 0-6-8 to 3-6-8, Interior(1) 3-6-8 to 8-0-10, Exterior(2) 8-0-10 to 11-0-10, Interior(1) 11-0-10 to 15-6-12 zone; cantilever left and right exposed ; end vertical left and right exposed;C-C for members and forces & MWFRS for reactions shown; Lumber DOL=1.60 plate grip DOL=1.60
3) Gable requires continuous bottom chord bearing.
4) This truss has been designed for a 10.0 psf bottom chord live load nonconcurrent with any other live loads.
5) * This truss has been designed for a live load of 20.0psf on the bottom chord in all areas where a rectangle 3-6-0 tall by 2-0-0 wide will fit between the bottom chord and any other members.
6) Provide mechanical connection (by others) of truss to bearing plate capable of withstanding 100 lb uplift at joint(s) 1, 8, 6.

NORTH CAROLINA PROFESSIONAL SEAL 036322 ENGINEER ERIC A. GILBERT

April 1,2022

ENGINEERING BY TRENCO A MiTek Affiliate
818 Soundside Road
Edenton, NC 27932

Job	Truss	Truss Type	Qty	Ply	Clearwater Farm
FARM	V08	GABLE	1	1	I51100419 Job Reference (optional)

Builders FirstSource (Apex, NC), Apex, NC - 27523, 8.530 s Dec 6 2021 MiTek Industries, Inc. Thu Mar 31 10:15:49 2022 Page 1
ID:zbkIr1dFypInNUy02maTGGyYVBm-X8MbxDz7QvTn06cDSLxWozt_TYlsF9JRy1AL7WzVRxO

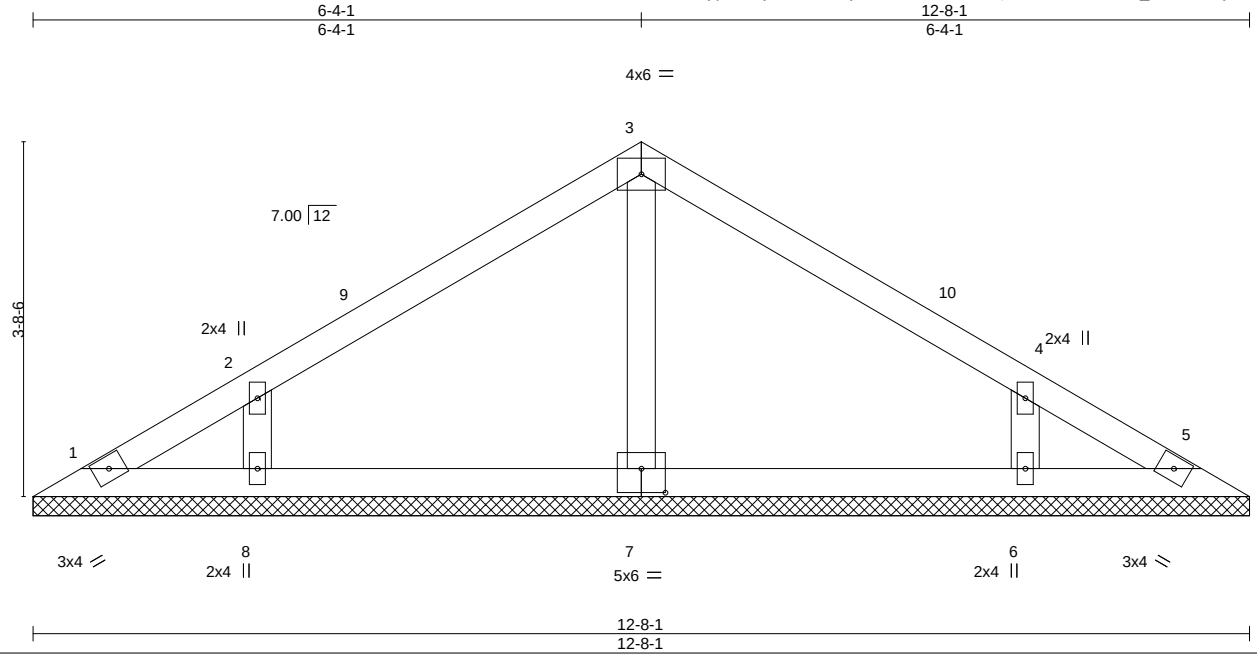

Plate Offsets (X,Y)-- [7:0-3-0,0-3-0]

LOADING (psf)		SPACING- 2-0-0		CSI.		DEFL. in (loc) l/defl L/d		PLATES	GRIP
TCLL	20.0	Plate Grip DOL	1.15	TC	0.29	Vert(LL) n/a - n/a 999		MT20	244/190
TCDL	10.0	Lumber DOL	1.15	BC	0.21	Vert(CT) n/a - n/a 999			
BCLL	0.0 *	Rep Stress Incr	YES	WB	0.05	Horz(CT) 0.00 5 n/a n/a			
BCDL	10.0	Code IRC2015/TPI2014		Matrix-S				Weight: 46 lb	FT = 20%

LUMBER-
TOP CHORD 2x4 SP No.3
BOT CHORD 2x4 SP No.3
OTHERS 2x4 SP No.3

BRACING-
TOP CHORD Structural wood sheathing directly applied or 6-0-0 oc purlins.
BOT CHORD Rigid ceiling directly applied or 10-0-0 oc bracing.

REACTIONS. All bearings 12-8-1.
(lb) - Max Horz 1=67(LC 9)
Max Uplift All uplift 100 lb or less at joint(s) 1, 5, 8, 6
Max Grav All reactions 250 lb or less at joint(s) 1, 5 except 7=279(LC 1), 8=296(LC 19), 6=296(LC 20)

FORCES. (lb) - Max. Comp./Max. Ten. - All forces 250 (lb) or less except when shown.

NOTES-
1) Unbalanced roof live loads have been considered for this design.
2) Wind: ASCE 7-10; Vult=115mph Vasd=91mph; TCDL=6.0psf; BCDL=6.0psf; h=32ft; Cat. II; Exp B; Enclosed; MWFRS (envelope) gable end zone and C-C Exterior(2) 0-6-8 to 3-6-8, Interior(1) 3-6-8 to 6-4-1, Exterior(2) 6-4-1 to 9-4-1, Interior(1) 9-4-1 to 12-1-10 zone; cantilever left and right exposed ; end vertical left and right exposed;C-C for members and forces & MWFRS for reactions shown; Lumber DOL=1.60 plate grip DOL=1.60
3) Gable requires continuous bottom chord bearing.
4) This truss has been designed for a 10.0 psf bottom chord live load nonconcurrent with any other live loads.
5) * This truss has been designed for a live load of 20.0psf on the bottom chord in all areas where a rectangle 3-6-0 tall by 2-0-0 wide will fit between the bottom chord and any other members.
6) Provide mechanical connection (by others) of truss to bearing plate capable of withstanding 100 lb uplift at joint(s) 1, 5, 8, 6.

April 1,2022

ENGINEERING BY TRENCO A MiTek Affiliate
818 Soundside Road
Edenton, NC 27932

Job	Truss	Truss Type	Qty	Ply	Clearwater Farm
FARM	V09	GABLE	1	1	I51100420 Job Reference (optional)

Builders FirstSource (Apex, NC), Apex, NC - 27523, 8.530 s Dec 6 2021 MiTek Industries, Inc. Thu Mar 31 10:15:50 2022 Page 1
ID:zbkIr1dFypInNUy02maTGGyYVBm-?Kw_9Y_lBDbeeGBP??2SlKAP7hy4w_cdaBhvvfyzVRxN

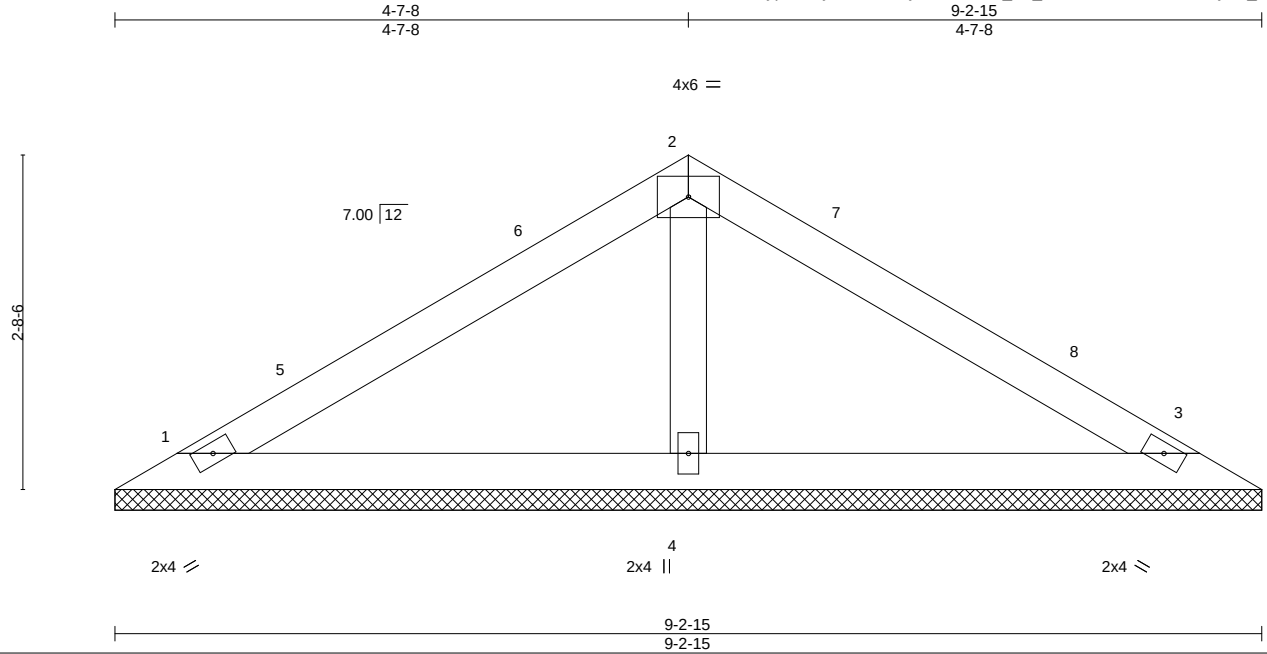

LOADING (psf)		SPACING- 2-0-0		CSI.		DEFL.	in	(loc)	l/defl	L/d	PLATES	GRIP
TCLL	20.0	Plate Grip DOL	1.15	TC	0.39	Vert(LL)	n/a	-	n/a	999	MT20	244/190
TCDL	10.0	Lumber DOL	1.15	BC	0.28	Vert(CT)	n/a	-	n/a	999		
BCLL	0.0 *	Rep Stress Incr	YES	WB	0.05	Horz(CT)	0.00	3	n/a	n/a		
BCDL	10.0	Code IRC2015/TPI2014		Matrix-S							Weight: 31 lb	FT = 20%

LUMBER-
TOP CHORD 2x4 SP No.3
BOT CHORD 2x4 SP No.3
OTHERS 2x4 SP No.3

BRACING-
TOP CHORD Structural wood sheathing directly applied or 6-0-0 oc purlins.
BOT CHORD Rigid ceiling directly applied or 10-0-0 oc bracing.

REACTIONS. (size) 1=9-2-15, 3=9-2-15, 4=9-2-15
Max Horz 1=47(LC 9)
Max Uplift 1=-15(LC 12), 3=-21(LC 13)
Max Grav 1=154(LC 23), 3=154(LC 24), 4=346(LC 1)

FORCES. (lb) - Max. Comp./Max. Ten. - All forces 250 (lb) or less except when shown.

NOTES-
1) Unbalanced roof live loads have been considered for this design.
2) Wind: ASCE 7-10; Vult=115mph Vasd=91mph; TCDL=6.0psf; BCDL=6.0psf; h=32ft; Cat. II; Exp B; Enclosed; MWFRS (envelope) gable end zone and C-C Exterior(2) 0-6-8 to 3-6-8, Interior(1) 3-6-8 to 4-7-8, Exterior(2) 4-7-8 to 7-7-8, Interior(1) 7-7-8 to 8-8-7 zone; cantilever left and right exposed ; end vertical left and right exposed;C-C for members and forces & MWFRS for reactions shown; Lumber DOL=1.60 plate grip DOL=1.60
3) Gable requires continuous bottom chord bearing.
4) This truss has been designed for a 10.0 psf bottom chord live load nonconcurrent with any other live loads.
5) * This truss has been designed for a live load of 20.0psf on the bottom chord in all areas where a rectangle 3-6-0 tall by 2-0-0 wide will fit between the bottom chord and any other members.
6) Provide mechanical connection (by others) of truss to bearing plate capable of withstanding 100 lb uplift at joint(s) 1, 3.

April 1,2022

ENGINEERING BY TRENCO A MiTek Affiliate
818 Soundside Road
Edenton, NC 27932

Job	Truss	Truss Type	Qty	Ply	Clearwater Farm
FARM	V10	VALLEY	1	1	I51100421 Job Reference (optional)

Builders FirstSource (Apex, NC), Apex, NC - 27523, 8.530 s Dec 6 2021 MiTek Industries, Inc. Thu Mar 31 10:15:51 2022 Page 1
ID:zbkIr1dFypInNUy02maTGGyYVBm-TXUMMu?OyXjUGPmcZmz_tOyMxLT2j3GjQLfSBOzVRxM

2-10-14 | 5-9-13
2-10-14 | 2-10-14

Scale = 1:13.0

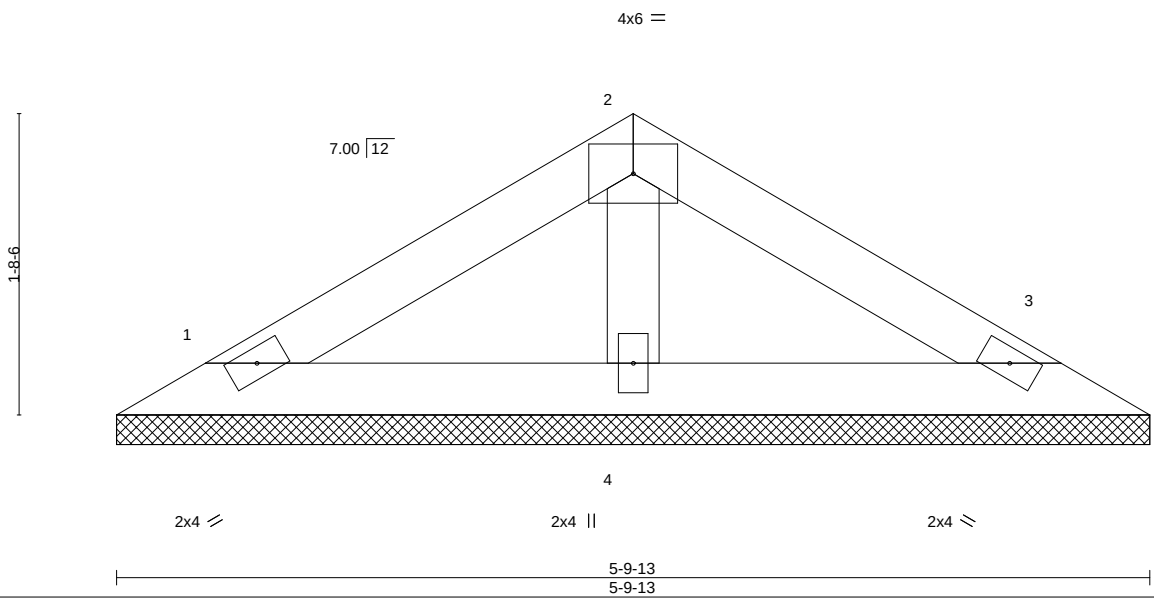

LOADING (psf)		SPACING- 2-0-0		CSI.		DEFL.	in	(loc)	l/defl	L/d	PLATES	GRIP
TCLL	20.0	Plate Grip DOL	1.15	TC	0.17	Vert(LL)	n/a	-	n/a	999	MT20	244/190
TCDL	10.0	Lumber DOL	1.15	BC	0.10	Vert(CT)	n/a	-	n/a	999		
BCLL	0.0 *	Rep Stress Incr	YES	WB	0.02	Horz(CT)	0.00	3	n/a	n/a		
BCDL	10.0	Code IRC2015/TPI2014		Matrix-P							Weight: 19 lb	FT = 20%

LUMBER-
TOP CHORD 2x4 SP No.3
BOT CHORD 2x4 SP No.3
OTHERS 2x4 SP No.3

BRACING-
TOP CHORD Structural wood sheathing directly applied or 5-9-13 oc purlins.
BOT CHORD Rigid ceiling directly applied or 10-0-0 oc bracing.

REACTIONS. (size) 1=5-9-13, 3=5-9-13, 4=5-9-13
Max Horz 1=27(LC 11)
Max Uplift 1=-12(LC 12), 3=-16(LC 13)
Max Grav 1=98(LC 1), 3=98(LC 1), 4=182(LC 1)

FORCES. (lb) - Max. Comp./Max. Ten. - All forces 250 (lb) or less except when shown.

NOTES-
1) Unbalanced roof live loads have been considered for this design.
2) Wind: ASCE 7-10; Vult=115mph Vasd=91mph; TCDL=6.0psf; BCDL=6.0psf; h=32ft; Cat. II; Exp B; Enclosed; MWFRS (envelope) gable end zone and C-C Exterior(2) zone; cantilever left and right exposed ; end vertical left and right exposed;C-C for members and forces & MWFRS for reactions shown; Lumber DOL=1.60 plate grip DOL=1.60
3) Gable requires continuous bottom chord bearing.
4) This truss has been designed for a 10.0 psf bottom chord live load nonconcurrent with any other live loads.
5) * This truss has been designed for a live load of 20.0psf on the bottom chord in all areas where a rectangle 3-6-0 tall by 2-0-0 wide will fit between the bottom chord and any other members.
6) Provide mechanical connection (by others) of truss to bearing plate capable of withstanding 100 lb uplift at joint(s) 1, 3.

April 1,2022

ENGINEERING BY TRENCO A MiTek Affiliate
818 Soundside Road
Edenton, NC 27932

Job	Truss	Truss Type	Qty	Ply	Clearwater Farm
FARM	V11	VALLEY	1	1	I51100422 Job Reference (optional)

Builders FirstSource, Apex, NC 27523

8.530 s Jan 6 2022 MiTek Industries, Inc. Fri Apr 1 02:16:57 2022 Page 1
ID:zbkIr1dFypInNUy02maTGGyYVBm-fqe9oNfbWJedVZQeY_LSh_l5YsoCybSfh1YuA_zVDsK

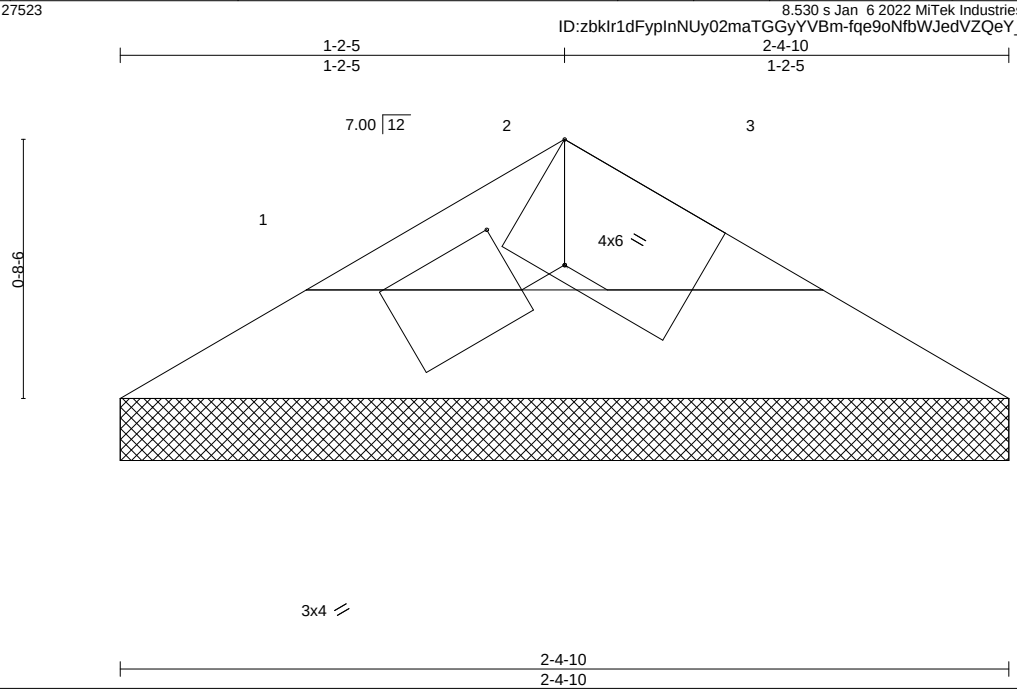

Plate Offsets (X,Y)-- [1:Edge,0-3-8], [1:0-1-10,0-2-4]

LOADING (psf)		SPACING-	2-0-0	CSI.		DEFL.	in	(loc)	l/defl	L/d	PLATES	GRIP
TCLL	20.0	Plate Grip DOL	1.15	TC	0.01	Vert(LL)	n/a	-	n/a	999	MT20	244/190
TCDL	10.0	Lumber DOL	1.15	BC	0.03	Vert(CT)	n/a	-	n/a	999		
BCLL	0.0 *	Rep Stress Incr	YES	WB	0.00	Horz(CT)	0.00	3	n/a	n/a		
BCDL	10.0	Code IRC2015/TPI2014		Matrix-P							Weight: 6 lb	FT = 20%

LUMBER-
TOP CHORD 2x4 SP No.3
BOT CHORD 2x4 SP No.3

BRACING-
TOP CHORD Structural wood sheathing directly applied or 2-4-10 oc purlins.
BOT CHORD Rigid ceiling directly applied or 10-0-0 oc bracing.

REACTIONS. (lb/size) 1=52/2-4-10, 3=52/2-4-10
Max Horz 1=-8(LC 10)
Max Uplift 1=-2(LC 12), 3=-2(LC 13)

FORCES. (lb) - Max. Comp./Max. Ten. - All forces 250 (lb) or less except when shown.

NOTES-
1) Unbalanced roof live loads have been considered for this design.
2) Wind: ASCE 7-10; Vult=115mph Vasd=91mph; TCDL=6.0psf; BCDL=6.0psf; h=32ft; Cat. II; Exp B; Enclosed; MWFRS (envelope) gable end zone and C-C Exterior(2) zone; cantilever left and right exposed ; end vertical left and right exposed;C-C for members and forces & MWFRS for reactions shown; Lumber DOL=1.60 plate grip DOL=1.60
3) Gable requires continuous bottom chord bearing.
4) This truss has been designed for a 10.0 psf bottom chord live load nonconcurrent with any other live loads.
5) * This truss has been designed for a live load of 20.0psf on the bottom chord in all areas where a rectangle 3-6-0 tall by 2-0-0 wide will fit between the bottom chord and any other members.
6) Provide mechanical connection (by others) of truss to bearing plate capable of withstanding 2 lb uplift at joint 1 and 2 lb uplift at joint 3.
7) This truss is designed in accordance with the 2015 International Residential Code sections R502.11.1 and R802.10.2 and referenced standard ANSI/TPI 1.

April 1,2022

ENGINEERING BY TRENCO A MiTek Affiliate
818 Soundside Road
Edenton, NC 27932

Symbols

PLATE LOCATION AND ORIENTATION

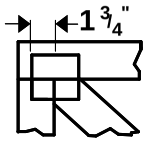

Center plate on joint unless x, y offsets are indicated. Dimensions are in ft-in-sixteenths. Apply plates to both sides of truss and fully embed teeth.

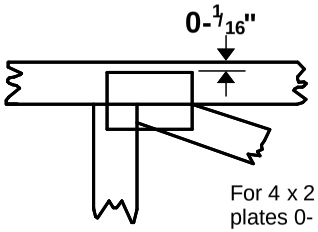

For 4 x 2 orientation, locate plates 0- 1/16" from outside edge of truss.

This symbol indicates the required direction of slots in connector plates.

*** Plate location details available in MiTek 20/20 software or upon request.**

PLATE SIZE

4 x 4

The first dimension is the plate width measured perpendicular to slots. Second dimension is the length parallel to slots.

LATERAL BRACING LOCATION

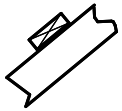

Indicated by symbol shown and/or by text in the bracing section of the output. Use T or I bracing if indicated.

BEARING

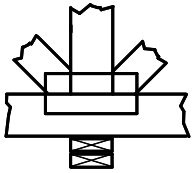

Indicates location where bearings (supports) occur. Icons vary but reaction section indicates joint number where bearings occur. Min size shown is for crushing only.

Industry Standards:

ANSI/TPI1: National Design Specification for Metal Plate Connected Wood Truss Construction.
DSB-89: Design Standard for Bracing.
BCSI: Building Component Safety Information, Guide to Good Practice for Handling, Installing & Bracing of Metal Plate Connected Wood Trusses.

Numbering System

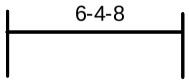

dimensions shown in ft-in-sixteenths
(Drawings not to scale)

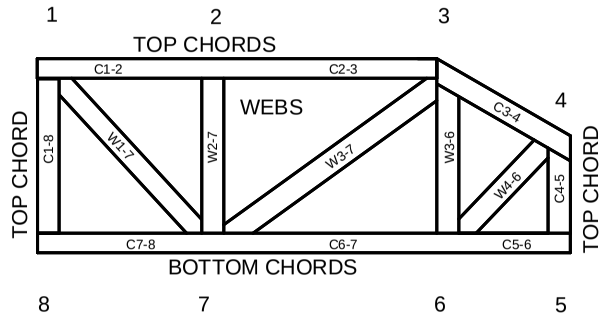

JOINTS ARE GENERALLY NUMBERED/LETTERED CLOCKWISE AROUND THE TRUSS STARTING AT THE JOINT FARTHEST TO THE LEFT.

CHORDS AND WEBS ARE IDENTIFIED BY END JOINT NUMBERS/LETTERS.

PRODUCT CODE APPROVALS

ICC-ES Reports:

ESR-1311, ESR-1352, ESR1988
ER-3907, ESR-2362, ESR-1397, ESR-3282

Trusses are designed for wind loads in the plane of the truss unless otherwise shown.

Lumber design values are in accordance with ANSI/TPI 1 section 6.3 These truss designs rely on lumber values established by others.

MiTek

ENGINEERING BY TRENCO
A MiTek Affiliate

General Safety Notes

Failure to Follow Could Cause Property Damage or Personal Injury

1. Additional stability bracing for truss system, e.g. diagonal or X-bracing, is always required. See BCSI.
2. Truss bracing must be designed by an engineer. For wide truss spacing, individual lateral braces themselves may require bracing, or alternative Tor I bracing should be considered.
3. Never exceed the design loading shown and never stack materials on inadequately braced trusses.
4. Provide copies of this truss design to the building designer, erection supervisor, property owner and all other interested parties.
5. Cut members to bear tightly against each other.
6. Place plates on each face of truss at each joint and embed fully. Knots and wane at joint locations are regulated by ANSI/TPI 1.
7. Design assumes trusses will be suitably protected from the environment in accord with ANSI/TPI 1.
8. Unless otherwise noted, moisture content of lumber shall not exceed 19% at time of fabrication.
9. Unless expressly noted, this design is not applicable for use with fire retardant, preservative treated, or green lumber.
10. Camber is a non-structural consideration and is the responsibility of truss fabricator. General practice is to camber for dead load deflection.
11. Plate type, size, orientation and location dimensions indicated are minimum plating requirements.
12. Lumber used shall be of the species and size, and in all respects, equal to or better than that specified.
13. Top chords must be sheathed or purlins provided at spacing indicated on design.
14. Bottom chords require lateral bracing at 10 ft. spacing, or less, if no ceiling is installed, unless otherwise noted.
15. Connections not shown are the responsibility of others.
16. Do not cut or alter truss member or plate without prior approval of an engineer.
17. Install and load vertically unless indicated otherwise.
18. Use of green or treated lumber may pose unacceptable environmental, health or performance risks. Consult with project engineer before use.
19. Review all portions of this design (front, back, words and pictures) before use. Reviewing pictures alone is not sufficient.
20. Design assumes manufacture in accordance with ANSI/TPI 1 Quality Criteria.
21. The design does not take into account any dynamic or other loads other than those expressly stated.