ENGINEERING BY
TRENCO
A MiTek Affiliate

Trenco
818 Soundside Rd
Edenton, NC 27932

Re: 149_2115_D
KB Home 149.2115.D

The truss drawing(s) referenced below have been prepared by Truss Engineering Co. under my direct supervision based on the parameters provided by 84 Components - #2383.

Pages or sheets covered by this seal: I49048106 thru I49048147

My license renewal date for the state of North Carolina is December 31, 2021.

North Carolina COA: C-0844

NORTH CAROLINA
PROFESSIONAL
SEAL
044925
ENGINEER
SCOTT M. SEVIER

December 2,2021

Sevier, Scott

IMPORTANT NOTE: The seal on these truss component designs is a certification that the engineer named is licensed in the jurisdiction(s) identified and that the designs comply with ANSI/TPI 1. These designs are based upon parameters shown (e.g., loads, supports, dimensions, shapes and design codes), which were given to MiTek or TRENCO. Any project specific information included is for MiTek's or TRENCO's customers file reference purpose only, and was not taken into account in the preparation of these designs. MiTek or TRENCO has not independently verified the applicability of the design parameters or the designs for any particular building. Before use, the building designer should verify applicability of design parameters and properly incorporate these designs into the overall building design per ANSI/TPI 1, Chapter 2.

Job	Truss	Truss Type	Qty	Ply	KB Home 149.2115.D
149_2115_D	A1A	Piggyback Base	2	1	I49048106 Job Reference (optional)

84 Components (Dunn), Dunn, NC - 28334, 8.520 s Aug 27 2021 MiTek Industries, Inc. Wed Dec 1 15:18:07 2021 Page 1
ID:bNZHYySm82JAWDNgfw9uCLzLbIt-JVQqGVqg2G7C2ytvi591oPOym7b7GHPlKgYQneyDIHk

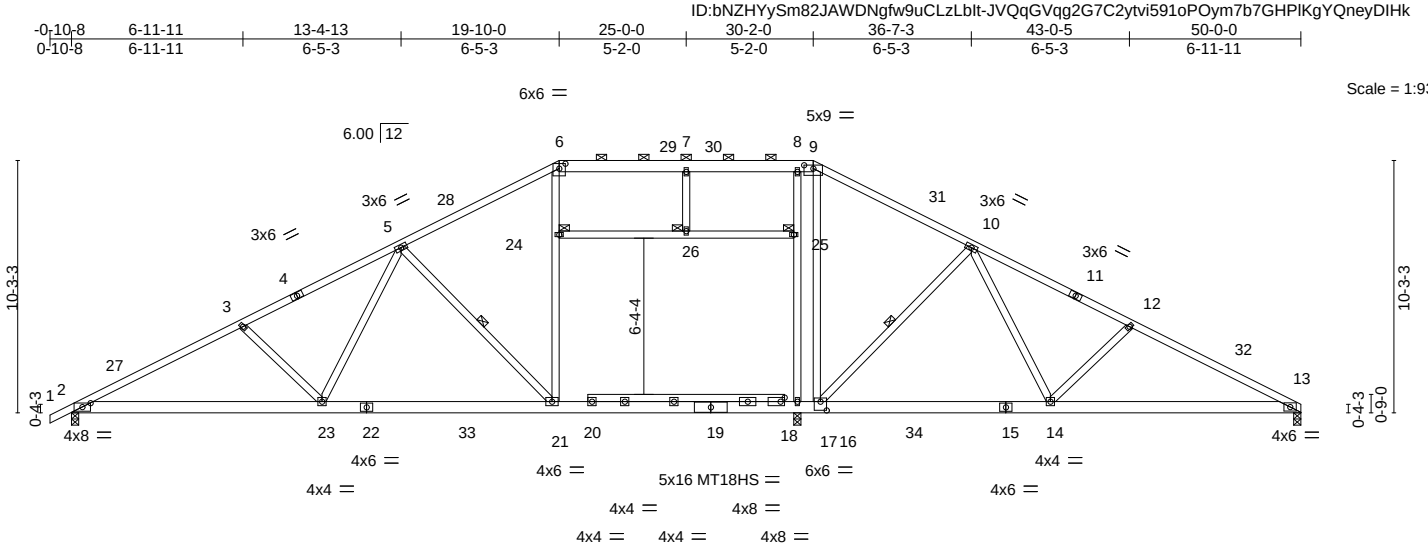

10-2-4	19-10-0	25-0-0	29-8-0	30-2-0	39-9-12	50-0-0
10-2-4	9-7-12	5-2-0	4-8-0	0-6-0	9-7-12	10-2-4

Plate Offsets (X,Y)-- [2:0-4-0,0-1-15], [6:0-3-0,0-2-7], [9:0-4-8,0-1-11], [16:0-3-0,0-4-4]

LOADING (psf)		SPACING- 2-0-0		CSI.		DEFL.	in	(loc)	l/defl	L/d	PLATES	GRIP
TCLL	20.0	Plate Grip DOL	1.15	TC	0.96	Vert(LL)	-0.60	21-23	>583	240	MT20	197/144
TCDL	10.0	Lumber DOL	1.15	BC	0.69	Vert(CT)	-1.04	21-23	>339	180	MT18HS	244/190
BCLL	0.0 *	Rep Stress Incr	YES	WB	0.61	Horz(CT)	0.12	13	n/a	n/a		
BCDL	10.0	Code IRC2018/TPI2014		Matrix-S		Attic	-0.29	17-21	404	360	Weight: 341 lb	FT = 20%

LUMBER-
TOP CHORD 2x4 SP No.1 *Except*
6-9: 2x6 SP No.2, 1-4: 2x4 SP No.2 or 2x4 SPF No.2
BOT CHORD 2x6 SP DSS *Except*
18-20: 2x4 SP No.2 or 2x4 SPF No.2
WEBS 2x4 SP No.3 *Except*
6-21,8-17: 2x4 SP No.2 or 2x4 SPF No.2

BRACING-
TOP CHORD Structural wood sheathing directly applied, except
2-0-0 oc purlins (3-1-0 max.): 6-9.
BOT CHORD Rigid ceiling directly applied or 10-0-0 oc bracing.
WEBS 1 Row at midpt 5-21, 10-16
JOINTS 1 Brace at Jt(s): 24, 25, 26

REACTIONS. (size) 2=(0-3-8 + H10A Simpson Strong-Tie) (req. 0-3-11), 17=0-3-8, 13=0-3-8
Max Horz 2=171(LC 12)
Max Uplift 2=-222(LC 12), 17=-208(LC 13), 13=-79(LC 12)
Max Grav 2=2353(LC 28), 17=703(LC 27), 13=2191(LC 2)

FORCES. (lb) - Max. Comp./Max. Ten. - All forces 250 (lb) or less except when shown.
TOP CHORD 2-3=-4550/420, 3-5=-4308/391, 5-6=-3304/324, 6-7=-2850/326, 7-8=-2850/325, 8-9=-2867/324, 9-10=-3228/346, 10-12=-4000/251, 12-13=-4239/263
BOT CHORD 2-23=-453/3999, 21-23=-290/3448, 17-21=-122/2881, 16-17=-122/2872, 14-16=-142/3257, 13-14=-168/3741
WEBS 3-23=-365/208, 5-23=-39/790, 5-21=-821/244, 21-24=-51/1022, 6-24=-39/1071, 9-16=-129/1270, 10-16=-651/252, 10-14=-52/607, 12-14=-399/221, 17-25=-765/247, 8-25=-721/250

NOTES-
1) Unbalanced roof live loads have been considered for this design.
2) Wind: ASCE 7-16; Vult=130mph (3-second gust) Vasd=103mph; TCDL=6.0psf; BCDL=6.0psf; h=25ft; Cat. II; Exp B; Enclosed; MWFRS (envelope) gable end zone and C-C Exterior(2E) -0-10-8 to 2-1-8, Interior(1) 2-1-8 to 19-10-0, Exterior(2R) 19-10-0 to 24-0-15, Interior(1) 24-0-15 to 30-2-0, Exterior(2R) 30-2-0 to 34-4-15, Interior(1) 34-4-15 to 49-10-4 zone;C-C for members and forces & MWFRS for reactions shown; Lumber DOL=1.60 plate grip DOL=1.60
3) Provide adequate drainage to prevent water ponding.
4) All plates are MT20 plates unless otherwise indicated.
5) All plates are 2x4 MT20 unless otherwise indicated.
6) This truss has been designed for a 10.0 psf bottom chord live load nonconcurrent with any other live loads.
7) * This truss has been designed for a live load of 20.0psf on the bottom chord in all areas where a rectangle 3-6-0 tall by 2-0-0 wide will fit between the bottom chord and any other members, with BCDL = 10.0psf.
8) Ceiling dead load (5.0 psf) on member(s). 24-26, 25-26
9) Bottom chord live load (40.0 psf) and additional bottom chord dead load (0.0 psf) applied only to room. 17-21
10) H10A Simpson Strong-Tie connectors recommended to connect truss to bearing walls due to UPLIFT at jt(s) 2. This connection is for uplift only and does not consider lateral forces.
11) One H2.5A Simpson Strong-Tie connectors recommended to connect truss to bearing walls due to UPLIFT at jt(s) 17 and 13. This connection is for uplift only and does not consider lateral forces.
12) This truss is designed in accordance with the 2018 International Residential Code sections R502.11.1 and R802.10.2 and referenced standard ANSI/TPI 1.

December 2,2021

Continued on page 2

WARNING - Verify design parameters and READ NOTES ON THIS AND INCLUDED MITEK REFERENCE PAGE MII-7473 rev. 5/19/2020 BEFORE USE.
Design valid for use only with MiTek® connectors. This design is based only upon parameters shown, and is for an individual building component, not a truss system. Before use, the building designer must verify the applicability of design parameters and properly incorporate this design into the overall building design. Bracing indicated is to prevent buckling of individual truss web and/or chord members only. Additional temporary and permanent bracing is always required for stability and to prevent collapse with possible personal injury and property damage. For general guidance regarding the fabrication, storage, delivery, erection and bracing of trusses and truss systems, see **ANSI/TPI1 Quality Criteria, DSB-89 and BCSI Building Component Safety Information** available from Truss Plate Institute, 2670 Crain Highway, Suite 203 Waldorf, MD 20601

ENGINEERING BY TRENCO A MiTek Affiliate
818 Soundside Road
Edenton, NC 27932

NOTES-

13) Graphical purlin representation does not depict the size or the orientation of the purlin along the top and/or bottom chord.
14) ATTIC SPACE SHOWN IS DESIGNED AS UNINHABITABLE.

WARNING - Verify design parameters and READ NOTES ON THIS AND INCLUDED MITEK REFERENCE PAGE MII-7473 rev. 5/19/2020 BEFORE USE.
Design valid for use only with MiTek® connectors. This design is based only upon parameters shown, and is for an individual building component, not a truss system. Before use, the building designer must verify the applicability of design parameters and properly incorporate this design into the overall building design. Bracing indicated is to prevent buckling of individual truss web and/or chord members only. Additional temporary and permanent bracing is always required for stability and to prevent collapse with possible personal injury and property damage. For general guidance regarding the fabrication, storage, delivery, erection and bracing of trusses and truss systems, see **ANSI/TPI1 Quality Criteria, DSB-89 and BCSI Building Component Safety Information** available from Truss Plate Institute, 2670 Crain Highway, Suite 203 Waldorf, MD 20601

ENGINEERING BY TRENCO A MiTek Affiliate
818 Soundside Road
Edenton, NC 27932

Job	Truss	Truss Type	Qty	Ply	KB Home 149.2115.D
149_2115_D	A1B	PIGGYBACK BASE STRUC I	1	1	I49048107 Job Reference (optional)

84 Components (Dunn), Dunn, NC - 28334, 8.520 s Aug 27 2021 MiTek Industries, Inc. Wed Dec 1 15:18:09 2021 Page 1
ID:bNZHYySm82JAWDNgfw9uCLzLbIt-FuYbhAswatNwHG1IqWCVtqTHYxDxk6J2n_1XsXyDIHi

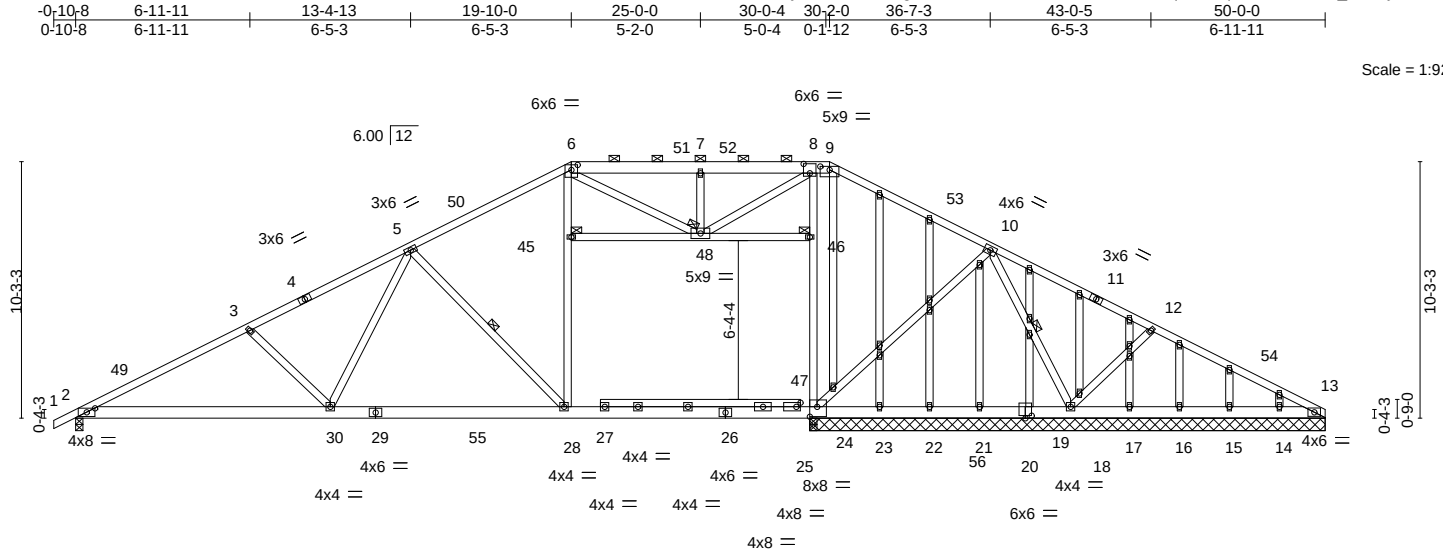

10-2-4	19-10-0	25-0-0	29-8-0	30-2-0	39-9-12	50-0-0
10-2-4	9-7-12	5-2-0	4-8-0	0-6-0	9-7-12	10-2-4

Plate Offsets (X,Y)-- [2:0-4-0,0-1-15], [6:0-3-0,0-2-7], [8:0-3-0,0-4-8], [9:0-4-8,0-1-11], [19:0-3-0,0-1-4], [24:0-3-8,0-4-12]

LOADING (psf)		SPACING- 2-0-0		CSI.		DEFL.	in	(loc)	l/defl	L/d	PLATES	GRIP
TCLL	20.0	Plate Grip DOL	1.15	TC	1.00	Vert(LL)	-0.53	28-30	>659	240	MT20	197/144
TCDL	10.0	Lumber DOL	1.15	BC	0.92	Vert(CT)	-0.93	28-30	>381	180		
BCLL	0.0 *	Rep Stress Incr	YES	WB	0.91	Horz(CT)	0.10	13	n/a	n/a		
BCDL	10.0	Code IRC2018/TPI2014		Matrix-S		Attic	-0.25	24-28	476	360	Weight: 415 lb	FT = 20%

LUMBER-

TOP CHORD 2x4 SP No.2 or 2x4 SPF No.2 *Except*
6-9: 2x6 SP No.2
BOT CHORD 2x6 SP DSS *Except*
25-27: 2x4 SP No.2, 26-29: 2x6 SP No.2
WEBS 2x4 SP No.3 *Except*
6-28,8-24: 2x4 SP No.2, 10-24: 2x4 SP No.2 or 2x4 SPF No.2
OTHERS 2x4 SP No.3

BRACING-

TOP CHORD Structural wood sheathing directly applied, except
2-0-0 oc purlins (3-4-9 max.): 6-9.
BOT CHORD Rigid ceiling directly applied or 10-0-0 oc bracing, Except:
2-2-0 oc bracing: 28-30
9-0-8 oc bracing: 23-24.
WEBS 1 Row at midpt 5-28, 10-18
JOINTS 1 Brace at Jt(s): 45, 46, 48

REACTIONS. All bearings 20-7-8 except (jt=length) 2=0-3-10 (input: 0-3-8 + H10A Simpson Strong-Tie).
(lb) - Max Horz 2=171(LC 16)
Max Uplift All uplift 100 lb or less at joint(s) 21, 14, 13 except 2=-213(LC 12), 24=-622(LC 26), 24=-427(LC 1), 18=-224(LC 12), 23=-886(LC 28)
Max Grav All reactions 250 lb or less at joint(s) 24, 23, 21, 19, 17, 16, 15, 14 except 2=2302(LC 28), 18=2401(LC 2), 22=432(LC 18), 13=619(LC 2)

FORCES. (lb) - Max. Comp./Max. Ten. - All forces 250 (lb) or less except when shown.
TOP CHORD 2-3=-4442/399, 3-5=-4199/370, 5-6=-3201/304, 6-7=-3152/312, 7-8=-3151/312, 8-9=-2689/301, 9-10=-3107/322, 10-12=-959/110, 12-13=-1221/104
BOT CHORD 2-30=-435/3902, 28-30=-271/3356, 24-28=-103/2766, 23-24=-65/1795, 22-23=-65/1795, 21-22=-65/1795, 19-21=-65/1795, 18-19=-65/1795, 17-18=-44/1034, 16-17=-44/1034, 15-16=-44/1034, 14-15=-44/1034, 13-14=-44/1034
WEBS 3-30=-362/209, 5-30=-38/776, 5-28=-821/242, 28-45=-44/973, 6-45=-31/994, 24-47=-65/1577, 10-47=-47/1336, 10-18=-2318/201, 12-18=-415/223, 24-46=-65/589, 8-46=-56/608, 9-47=-24/344, 7-48=-443/144, 8-48=-112/570, 6-48=-98/417

NOTES-

1) Unbalanced roof live loads have been considered for this design.
2) Wind: ASCE 7-16; Vult=130mph (3-second gust) Vasd=103mph; TCDL=6.0psf; BCDL=6.0psf; h=25ft; Cat. II; Exp B; Enclosed; MWFRS (envelope) gable end zone and C-C Exterior(2E) -0-10-8 to 2-1-8, Interior(1) 2-1-8 to 19-10-0, Exterior(2R) 19-10-0 to 24-0-15, Interior(1) 24-0-15 to 30-2-0, Exterior(2R) 30-2-0 to 34-4-15, Interior(1) 34-4-15 to 50-0-0 zone;C-C for members and forces & MWFRS for reactions shown; Lumber DOL=1.60 plate grip DOL=1.60
3) Provide adequate drainage to prevent water ponding.
4) All plates are 2x4 MT20 unless otherwise indicated.
5) This truss has been designed for a 10.0 psf bottom chord live load nonconcurrent with any other live loads.
6) * This truss has been designed for a live load of 20.0psf on the bottom chord in all areas where a rectangle 3-6-0 tall by 2-0-0 wide will fit between the bottom chord and any other members, with BCDL = 10.0psf.
7) Ceiling dead load (5.0 psf) on member(s). 45-48, 46-48
8) Bottom chord live load (40.0 psf) and additional bottom chord dead load (0.0 psf) applied only to room. 24-28
9) H10A Simpson Strong-Tie connectors recommended to connect truss to bearing walls due to UPLIFT at jt(s) 2. This connection is for uplift only and does not consider lateral forces.

December 2,2021

Continued on page 2

WARNING - Verify design parameters and READ NOTES ON THIS AND INCLUDED MITEK REFERENCE PAGE MII-7473 rev. 5/19/2020 BEFORE USE.
Design valid for use only with MiTek® connectors. This design is based only upon parameters shown, and is for an individual building component, not a truss system. Before use, the building designer must verify the applicability of design parameters and properly incorporate this design into the overall building design. Bracing indicated is to prevent buckling of individual truss web and/or chord members only. Additional temporary and permanent bracing is always required for stability and to prevent collapse with possible personal injury and property damage. For general guidance regarding the fabrication, storage, delivery, erection and bracing of trusses and truss systems, see **ANSI/TPI1 Quality Criteria, DSB-89 and BCSI Building Component Safety Information** available from Truss Plate Institute, 2670 Crain Highway, Suite 203 Waldorf, MD 20601

ENGINEERING BY TRENCO A MiTek Affiliate
818 Soundside Road
Edenton, NC 27932

NOTES-

10) N/A

11) N/A

12) One HTS20 Simpson Strong-Tie connectors recommended to connect truss to bearing walls due to UPLIFT at jt(s) 23. This connection is for uplift only and does not consider lateral forces.
13) This truss is designed in accordance with the 2018 International Residential Code sections R502.11.1 and R802.10.2 and referenced standard ANSI/TPI 1.
14) Graphical purlin representation does not depict the size or the orientation of the purlin along the top and/or bottom chord.
15) ATTIC SPACE SHOWN IS DESIGNED AS UNINHABITABLE.

WARNING - Verify design parameters and READ NOTES ON THIS AND INCLUDED MITEK REFERENCE PAGE MII-7473 rev. 5/19/2020 BEFORE USE.
Design valid for use only with MiTek® connectors. This design is based only upon parameters shown, and is for an individual building component, not a truss system. Before use, the building designer must verify the applicability of design parameters and properly incorporate this design into the overall building design. Bracing indicated is to prevent buckling of individual truss web and/or chord members only. Additional temporary and permanent bracing is always required for stability and to prevent collapse with possible personal injury and property damage. For general guidance regarding the fabrication, storage, delivery, erection and bracing of trusses and truss systems, see **ANSI/TPI1 Quality Criteria, DSB-89 and BCSI Building Component Safety Information** available from Truss Plate Institute, 2670 Crain Highway, Suite 203 Waldorf, MD 20601

ENGINEERING BY TRENCO A MiTek Affiliate
818 Soundside Road
Edenton, NC 27932

Job	Truss	Truss Type	Qty	Ply	KB Home 149.2115.D
149_2115_D	A2	Piggyback Base	3	1	I49048108 Job Reference (optional)

84 Components (Dunn), Dunn, NC - 28334, 8.520 s Aug 27 2021 MiTek Industries, Inc. Wed Dec 1 15:18:11 2021 Page 1
ID:bNZHYySm82JAWDNgfw9uCLzLbIt-BGgL6stA5UdeXZBgxxE_yFZhFkvzC0vLEIWewPyDIHg

-0-10-8	6-9-8	13-4-13	19-10-0	25-0-0	30-2-0	36-7-3	43-4-4	50-0-0	50-10-8
0-10-8	6-9-8	6-7-5	6-5-3	5-2-0	5-2-0	6-5-3	6-9-1	6-7-12	0-10-8

Scale = 1:86.4

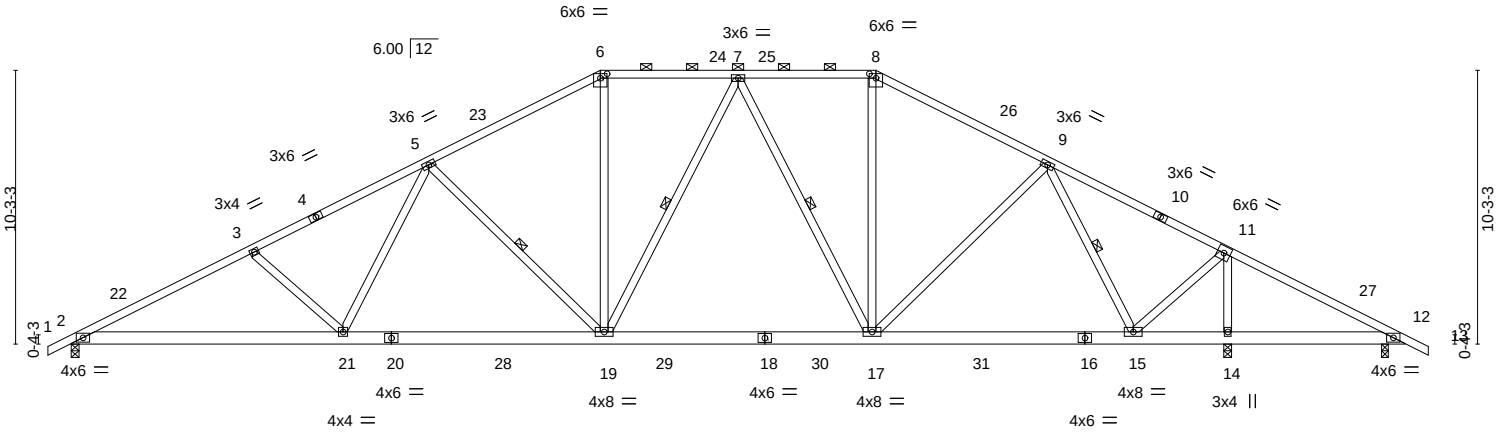

10-2-4	19-10-0	25-0-0	30-2-0	39-9-12	43-4-4	49-4-8	50-0-0
10-2-4	9-7-12	5-2-0	5-2-0	9-7-12	3-6-8	6-0-4	0-7-8

Plate Offsets (X,Y)-- [6:0-3-0,0-2-0], [8:0-3-0,0-2-0]

LOADING (psf)		SPACING- 2-0-0		CSI.		DEFL.	in	(loc)	l/defl	L/d	PLATES	GRIP
TCLL	20.0	Plate Grip DOL	1.15	TC	0.74	Vert(LL)	-0.21	19-21	>999	240	MT20	197/144
TCDL	10.0	Lumber DOL	1.15	BC	0.89	Vert(CT)	-0.37	19-21	>999	180		
BCLL	0.0 *	Rep Stress Incr	YES	WB	0.90	Horz(CT)	0.09	14	n/a	n/a		
BCDL	10.0	Code IRC2018/TPI2014		Matrix-S							Weight: 327 lb	FT = 20%

LUMBER-
TOP CHORD 2x4 SP No.2 or 2x4 SPF No.2
BOT CHORD 2x6 SP No.2
WEBS 2x4 SP No.3

BRACING-
TOP CHORD Structural wood sheathing directly applied or 2-2-8 oc purlins, except 2-0-0 oc purlins (3-11-1 max.): 6-8.
BOT CHORD Rigid ceiling directly applied or 6-0-0 oc bracing.
WEBS 1 Row at midpt 5-19, 7-19, 7-17, 9-15

REACTIONS. (size) 2=0-3-8, 14=(0-3-8 + H10A Simpson Strong-Tie) (req. 0-4-8), 12=0-3-0
Max Horz 2=-164(LC 13)
Max Uplift 2=-170(LC 12), 14=-149(LC 13), 12=-306(LC 27)
Max Grav 2=1893(LC 2), 14=2867(LC 2), 12=41(LC 12)

FORCES. (lb) - Max. Comp./Max. Ten. - All forces 250 (lb) or less except when shown.
TOP CHORD 2-3=-3522/305, 3-5=-3268/269, 5-6=-2314/277, 6-7=-2008/282, 7-8=-1632/253, 8-9=-1896/249, 9-11=-783/120, 11-12=-95/1159
BOT CHORD 2-21=-346/3086, 19-21=-180/2548, 17-19=-15/1887, 15-17=0/1230, 14-15=-964/140, 12-14=-964/140
WEBS 3-21=-380/213, 5-21=-28/710, 5-19=-785/244, 6-19=-13/732, 7-19=-75/337, 7-17=-642/133, 8-17=-4/553, 9-17=-22/633, 11-15=-71/2174, 11-14=-2626/232, 9-15=-1378/159

NOTES-
1) Unbalanced roof live loads have been considered for this design.
2) Wind: ASCE 7-16; Vult=130mph (3-second gust) Vasd=103mph; TCDL=6.0psf; BCDL=6.0psf; h=25ft; Cat. II; Exp B; Enclosed; MWFRS (envelope) gable end zone and C-C Exterior(2E) -0-10-8 to 2-1-8, Interior(1) 2-1-8 to 19-10-0, Exterior(2R) 19-10-0 to 24-0-15, Interior(1) 24-0-15 to 30-2-0, Exterior(2R) 30-2-0 to 34-4-15, Interior(1) 34-4-15 to 50-10-8 zone;C-C for members and forces & MWFRS for reactions shown; Lumber DOL=1.60 plate grip DOL=1.60
3) Provide adequate drainage to prevent water ponding.
4) This truss has been designed for a 10.0 psf bottom chord live load nonconcurrent with any other live loads.
5) * This truss has been designed for a live load of 20.0psf on the bottom chord in all areas where a rectangle 3-6-0 tall by 2-0-0 wide will fit between the bottom chord and any other members, with BCDL = 10.0psf.
6) H10A Simpson Strong-Tie connectors recommended to connect truss to bearing walls due to UPLIFT at jt(s) 14. This connection is for uplift only and does not consider lateral forces.
7) One H2.5A Simpson Strong-Tie connectors recommended to connect truss to bearing walls due to UPLIFT at jt(s) 2 and 12. This connection is for uplift only and does not consider lateral forces.
8) This truss is designed in accordance with the 2018 International Residential Code sections R502.11.1 and R802.10.2 and referenced standard ANSI/TPI 1.
9) Graphical purlin representation does not depict the size or the orientation of the purlin along the top and/or bottom chord.

December 2,2021

WARNING - Verify design parameters and READ NOTES ON THIS AND INCLUDED MITEK REFERENCE PAGE MII-7473 rev. 5/19/2020 BEFORE USE.
Design valid for use only with MiTek® connectors. This design is based only upon parameters shown, and is for an individual building component, not a truss system. Before use, the building designer must verify the applicability of design parameters and properly incorporate this design into the overall building design. Bracing indicated is to prevent buckling of individual truss web and/or chord members only. Additional temporary and permanent bracing is always required for stability and to prevent collapse with possible personal injury and property damage. For general guidance regarding the fabrication, storage, delivery, erection and bracing of trusses and truss systems, see **ANSI/TPI1 Quality Criteria, DSB-89 and BCSI Building Component Safety Information** available from Truss Plate Institute, 2670 Crain Highway, Suite 203 Waldorf, MD 20601

ENGINEERING BY TRENCO A MiTek Affiliate
818 Soundside Road
Edenton, NC 27932

Job	Truss	Truss Type	Qty	Ply	KB Home 149.2115.D
149_2115_D	A2A	Piggyback Base	3	1	I49048109 Job Reference (optional)

84 Components (Dunn), Dunn, NC - 28334, 8.520 s Aug 27 2021 MiTek Industries, Inc. Wed Dec 1 15:18:12 2021 Page 1
ID:bNZHYySm82JAWDNgfw9uCLzLbIt-fTEjJCuosolV8jltVflDVT5qd8G3xVUVTyGBSsyDIHf

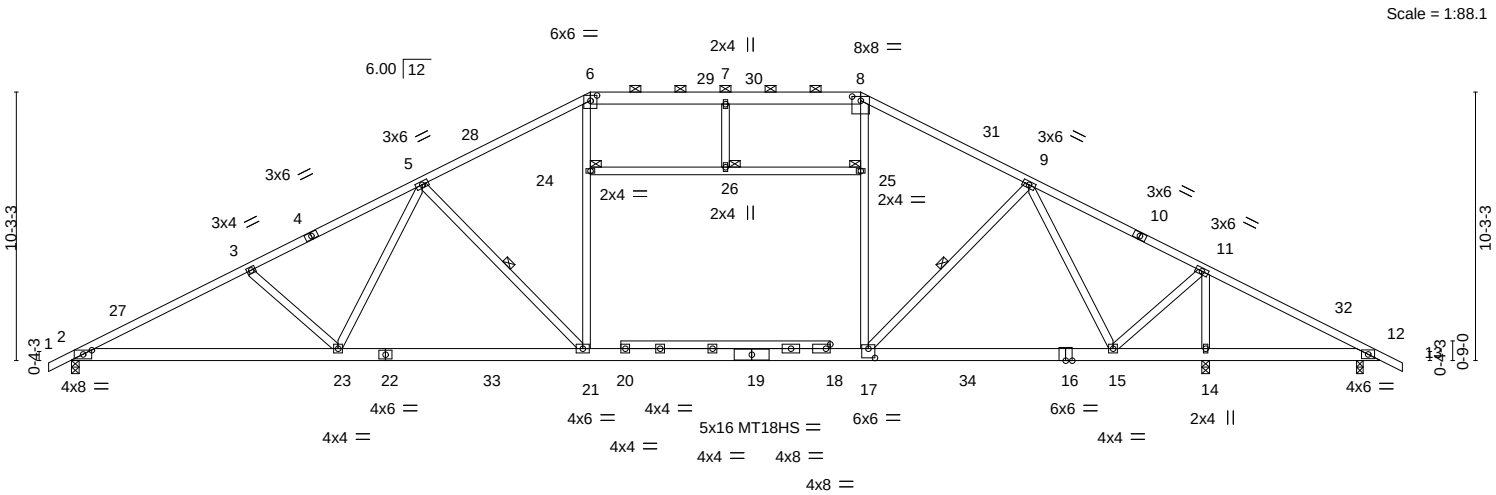

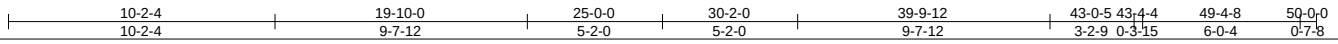

Plate Offsets (X,Y)-- [2:0-4-0,0-1-15], [6:0-3-0,0-2-7], [8:0-4-0,0-1-15], [17:0-3-0,0-4-4]

LOADING (psf)		SPACING- 2-0-0		CSI.		DEFL.	in	(loc)	l/defl	L/d	PLATES	GRIP
TCLL	20.0	Plate Grip DOL	1.15	TC	0.89	Vert(LL)	-0.72	21-23	>717	240	MT20	197/144
TCDL	10.0	Lumber DOL	1.15	BC	0.77	Vert(CT)	-1.18	21-23	>438	180	MT18HS	244/190
BCLL	0.0 *	Rep Stress Incr	YES	WB	0.81	Horz(CT)	0.11	12	n/a	n/a		
BCDL	10.0	Code IRC2018/TPI2014		Matrix-S		Attic	-0.44	17-21	288	360	Weight: 334 lb	FT = 20%

LUMBER-
TOP CHORD 2x4 SP No.1 *Except*
6-8: 2x6 SP No.2, 1-4,10-13: 2x4 SP No.2 or 2x4 SPF No.2
BOT CHORD 2x6 SP DSS *Except*
18-20: 2x4 SP No.2 or 2x4 SPF No.2
WEBS 2x4 SP No.3 *Except*
6-21,8-17,24-25: 2x4 SP No.2 or 2x4 SPF No.2

BRACING-
TOP CHORD Structural wood sheathing directly applied, except
2-0-0 oc purlins (2-9-7 max.): 6-8.
BOT CHORD Rigid ceiling directly applied or 10-0-0 oc bracing.
WEBS 1 Row at midpt 5-21, 9-17
JOINTS 1 Brace at Jt(s): 24, 25, 26

REACTIONS. (size) 2=(0-3-8 + H10A Simpson Strong-Tie) (req. 0-3-10), 14=0-3-8, 12=0-3-0
Max Horz 2=-164(LC 13)
Max Uplift 2=-189(LC 12), 14=-378(LC 13), 12=-266(LC 12)
Max Grav 2=2329(LC 2), 14=1837(LC 29), 12=1399(LC 28)

FORCES. (lb) - Max. Comp./Max. Ten. - All forces 250 (lb) or less except when shown.
TOP CHORD 2-3=-4509/355, 3-5=-4260/321, 5-6=-3236/249, 6-7=-2773/260, 7-8=-2773/260, 8-9=-3208/257, 9-11=-2977/394, 11-12=-2750/623
BOT CHORD 2-23=-389/3963, 21-23=-214/3398, 17-21=-34/2826, 15-17=-159/2760, 14-15=-499/2434, 12-14=-499/2434
WEBS 3-23=-368/209, 5-23=-54/819, 5-21=-850/263, 21-24=-22/986, 6-24=-10/1032, 17-25=-60/913, 8-25=-48/965, 11-14=-1544/410, 9-15=-778/207, 11-15=-175/1141

NOTES-
1) Unbalanced roof live loads have been considered for this design.
2) Wind: ASCE 7-16; Vult=130mph (3-second gust) Vasd=103mph; TCDL=6.0psf; BCDL=6.0psf; h=25ft; Cat. II; Exp B; Enclosed; MWFRS (envelope) gable end zone and C-C Exterior(2E) -0-10-8 to 2-1-8, Interior(1) 2-1-8 to 19-10-0, Exterior(2R) 19-10-0 to 24-0-15, Interior(1) 24-0-15 to 30-2-0, Exterior(2R) 30-2-0 to 34-4-15, Interior(1) 34-4-15 to 50-10-8 zone;C-C for members and forces & MWFRS for reactions shown; Lumber DOL=1.60 plate grip DOL=1.60
3) Provide adequate drainage to prevent water ponding.
4) All plates are MT20 plates unless otherwise indicated.
5) This truss has been designed for a 10.0 psf bottom chord live load nonconcurrent with any other live loads.
6) * This truss has been designed for a live load of 20.0psf on the bottom chord in all areas where a rectangle 3-6-0 tall by 2-0-0 wide will fit between the bottom chord and any other members, with BCDL = 10.0psf.
7) Ceiling dead load (5.0 psf) on member(s). 24-26, 25-26
8) Bottom chord live load (40.0 psf) and additional bottom chord dead load (0.0 psf) applied only to room. 17-21
9) H10A Simpson Strong-Tie connectors recommended to connect truss to bearing walls due to UPLIFT at jt(s) 2. This connection is for uplift only and does not consider lateral forces.
10) One H2.5A Simpson Strong-Tie connectors recommended to connect truss to bearing walls due to UPLIFT at jt(s) 14 and 12. This connection is for uplift only and does not consider lateral forces.
11) This truss is designed in accordance with the 2018 International Residential Code sections R502.11.1 and R802.10.2 and referenced standard ANSI/TPI 1.
12) Graphical purlin representation does not depict the size or the orientation of the purlin along the top and/or bottom chord.
13) ATTIC SPACE SHOWN IS DESIGNED AS UNINHABITABLE.

December 2,2021

WARNING - Verify design parameters and READ NOTES ON THIS AND INCLUDED MITEK REFERENCE PAGE MII-7473 rev. 5/19/2020 BEFORE USE.
Design valid for use only with MiTek® connectors. This design is based only upon parameters shown, and is for an individual building component, not a truss system. Before use, the building designer must verify the applicability of design parameters and properly incorporate this design into the overall building design. Bracing indicated is to prevent buckling of individual truss web and/or chord members only. Additional temporary and permanent bracing is always required for stability and to prevent collapse with possible personal injury and property damage. For general guidance regarding the fabrication, storage, delivery, erection and bracing of trusses and truss systems, see **ANSI/TPI1 Quality Criteria, DSB-89 and BCSI Building Component Safety Information** available from Truss Plate Institute, 2670 Crain Highway, Suite 203 Waldorf, MD 20601

ENGINEERING BY TRENCO A MiTek Affiliate
818 Soundside Road
Edenton, NC 27932

Job	Truss	Truss Type	Qty	Ply	KB Home 149.2115.D
149_2115_D	B1	Hip	1	1	I49048110 Job Reference (optional)

84 Components (Dunn), Dunn, NC - 28334, 8.520 s Aug 27 2021 MiTek Industries, Inc. Wed Dec 1 15:18:13 2021 Page 1
ID:bNZHYySm82JAWDNgfw9uCLzLbIt-7fn6XYvQd6tMmtK33MGS2ge6NYiBg76eic?l?IyDIHe

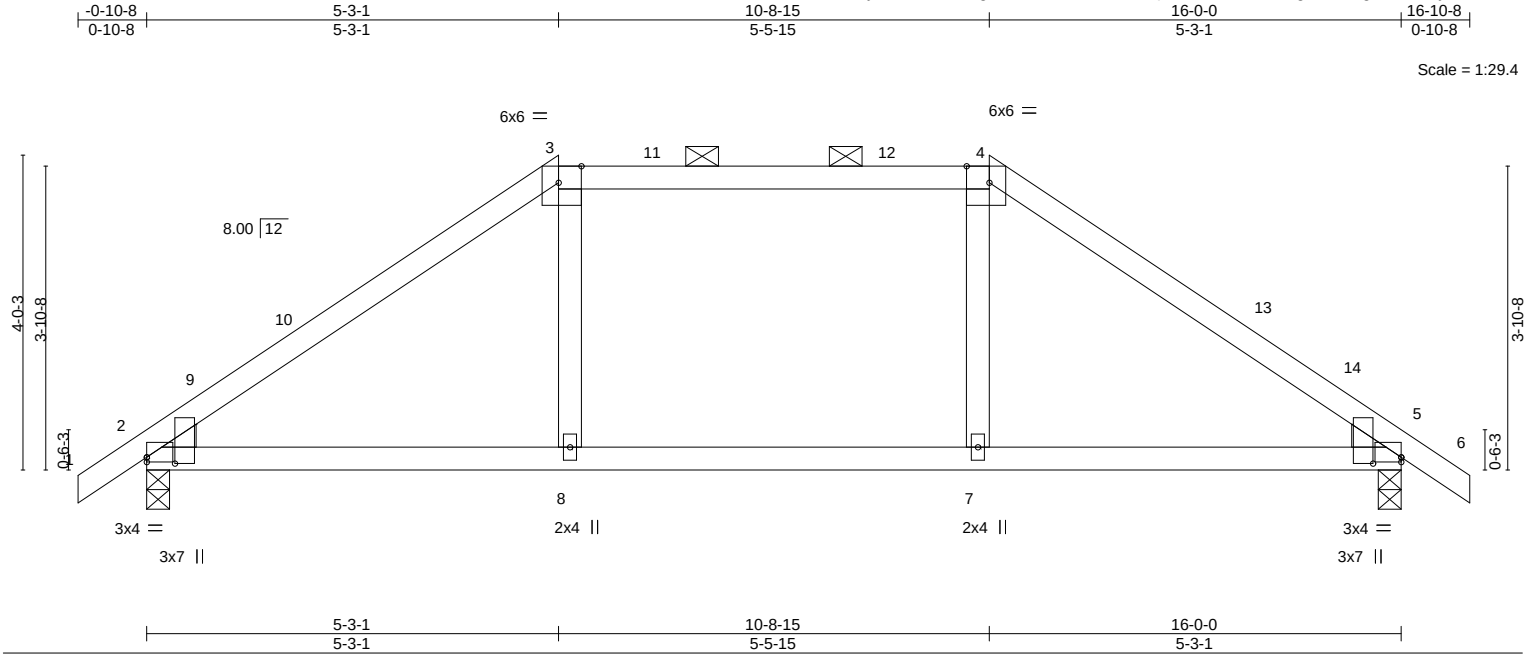

Plate Offsets (X,Y)-- [2:0-0-15,0-4-5], [2:0-0-0,0-0-12], [3:0-3-8,Edge], [4:0-3-8,Edge], [5:0-0-0,0-0-12], [5:0-0-15,0-4-5]

LOADING (psf)		**SPACING-** 2-0-0		**CSI.**		**DEFL.**	in	(loc)	l/defl	L/d	**PLATES**	**GRIP**
TCLL	20.0	Plate Grip DOL	1.15	TC	0.44	Vert(LL)	-0.10	2-8	>999	240	MT20	197/144
TCDL	10.0	Lumber DOL	1.15	BC	0.39	Vert(CT)	-0.13	2-8	>999	180		
BCLL	0.0 *	Rep Stress Incr	YES	WB	0.09	Horz(CT)	0.02	5	n/a	n/a		
BCDL	10.0	Code IRC2018/TPI2014		Matrix-S							Weight: 66 lb	FT = 20%

LUMBER-
TOP CHORD 2x4 SP No.2 or 2x4 SPF No.2
BOT CHORD 2x4 SP No.2 or 2x4 SPF No.2
WEBS 2x4 SP No.3
WEDGE
Left: 2x4 SP No.3 , Right: 2x4 SP No.3

BRACING-
TOP CHORD Structural wood sheathing directly applied or 5-11-5 oc purlins, except
2-0-0 oc purlins (6-0-0 max.): 3-4.
BOT CHORD Rigid ceiling directly applied or 10-0-0 oc bracing.

REACTIONS. (size) 2=0-3-8, 5=0-3-8
Max Horz 2=-95(LC 10)
Max Uplift 2=-57(LC 12), 5=-57(LC 13)
Max Grav 2=690(LC 1), 5=690(LC 1)

FORCES. (lb) - Max. Comp./Max. Ten. - All forces 250 (lb) or less except when shown.
TOP CHORD 2-3=-853/112, 3-4=-630/125, 4-5=-853/112
BOT CHORD 2-8=-18/625, 7-8=-14/630, 5-7=-15/625

NOTES-
1) Unbalanced roof live loads have been considered for this design.
2) Wind: ASCE 7-16; Vult=130mph (3-second gust) Vasd=103mph; TCDL=6.0psf; BCDL=6.0psf; h=25ft; Cat. II; Exp B; Enclosed; MWFRS (envelope) gable end zone and C-C Exterior(2E) -0-10-8 to 2-1-8, Interior(1) 2-1-8 to 5-3-1, Exterior(2R) 5-3-1 to 9-5-15, Interior(1) 9-5-15 to 10-8-15, Exterior(2R) 10-8-15 to 14-11-14, Interior(1) 14-11-14 to 16-10-8 zone;C-C for members and forces & MWFRS for reactions shown; Lumber DOL=1.60 plate grip DOL=1.60
3) Provide adequate drainage to prevent water ponding.
4) This truss has been designed for a 10.0 psf bottom chord live load nonconcurrent with any other live loads.
5) * This truss has been designed for a live load of 20.0psf on the bottom chord in all areas where a rectangle 3-6-0 tall by 2-0-0 wide will fit between the bottom chord and any other members.
6) One H2.5A Simpson Strong-Tie connectors recommended to connect truss to bearing walls due to UPLIFT at jt(s) 2 and 5. This connection is for uplift only and does not consider lateral forces.
7) This truss is designed in accordance with the 2018 International Residential Code sections R502.11.1 and R802.10.2 and referenced standard ANSI/TPI 1.
8) Graphical purlin representation does not depict the size or the orientation of the purlin along the top and/or bottom chord.

December 2,2021

WARNING - Verify design parameters and READ NOTES ON THIS AND INCLUDED MITEK REFERENCE PAGE MII-7473 rev. 5/19/2020 BEFORE USE.
Design valid for use only with MiTek® connectors. This design is based only upon parameters shown, and is for an individual building component, not a truss system. Before use, the building designer must verify the applicability of design parameters and properly incorporate this design into the overall building design. Bracing indicated is to prevent buckling of individual truss web and/or chord members only. Additional temporary and permanent bracing is always required for stability and to prevent collapse with possible personal injury and property damage. For general guidance regarding the fabrication, storage, delivery, erection and bracing of trusses and truss systems, see **ANSI/TPI1 Quality Criteria, DSB-89 and BCSI Building Component Safety Information** available from Truss Plate Institute, 2670 Crain Highway, Suite 203 Waldorf, MD 20601

ENGINEERING BY TRENCO A MiTek Affiliate
818 Soundside Road
Edenton, NC 27932

Job	Truss	Truss Type	Qty	Ply	KB Home 149.2115.D
149_2115_D	B2	Hip	1	1	I49048111 Job Reference (optional)

84 Components (Dunn), Dunn, NC - 28334, 8.520 s Aug 27 2021 MiTek Industries, Inc. Wed Dec 1 15:18:14 2021 Page 1
ID:bNZHYySm82JAWDNgfw9uCLzLbIt-brLUkuw3OP?CO1vFc3nhauBBYy1gPaXnxGlIXkyDIHd

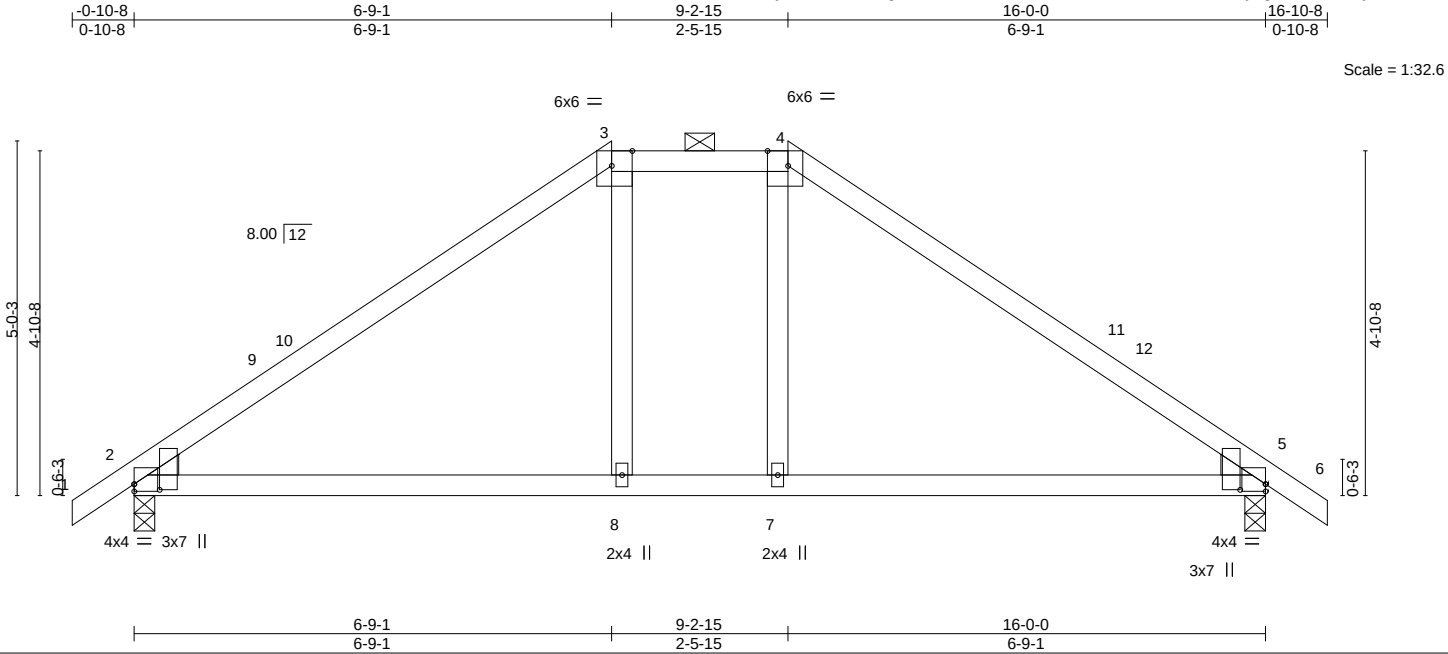

Plate Offsets (X,Y)-- [2:0-0-15,0-4-5], [2:0-0-0,0-1-4], [3:0-3-8,Edge], [4:0-3-8,Edge], [5:0-0-0,0-1-4], [5:0-0-15,0-4-5]

LOADING (psf)		SPACING- 2-0-0		CSI.		DEFL.	in	(loc)	l/defl	L/d	PLATES	GRIP
TCLL	20.0	Plate Grip DOL	1.15	TC	0.73	Vert(LL)	-0.11	5-7	>999	240	MT20	197/144
TCDL	10.0	Lumber DOL	1.15	BC	0.50	Vert(CT)	-0.19	5-7	>992	180		
BCLL	0.0 *	Rep Stress Incr	YES	WB	0.08	Horz(CT)	0.01	5	n/a	n/a		
BCDL	10.0	Code IRC2018/TPI2014		Matrix-S							Weight: 69 lb	FT = 20%

LUMBER-
TOP CHORD 2x4 SP No.2 or 2x4 SPF No.2
BOT CHORD 2x4 SP No.2 or 2x4 SPF No.2
WEBS 2x4 SP No.3
WEDGE
Left: 2x4 SP No.3 , Right: 2x4 SP No.3

BRACING-
TOP CHORD Structural wood sheathing directly applied or 4-7-1 oc purlins, except 2-0-0 oc purlins (6-0-0 max.): 3-4.
BOT CHORD Rigid ceiling directly applied or 10-0-0 oc bracing.

REACTIONS. (size) 2=0-3-8, 5=0-3-8
Max Horz 2=-118(LC 10)
Max Uplift 2=-67(LC 12), 5=-67(LC 13)
Max Grav 2=690(LC 1), 5=690(LC 1)

FORCES. (lb) - Max. Comp./Max. Ten. - All forces 250 (lb) or less except when shown.
TOP CHORD 2-3=-791/100, 3-4=-559/133, 4-5=-791/110
BOT CHORD 2-8=0/555, 7-8=0/559, 5-7=0/555

NOTES-
1) Unbalanced roof live loads have been considered for this design.
2) Wind: ASCE 7-16; Vult=130mph (3-second gust) Vasd=103mph; TCDL=6.0psf; BCDL=6.0psf; h=25ft; Cat. II; Exp B; Enclosed; MWFRS (envelope) gable end zone and C-C Exterior(2E) -0-10-8 to 2-1-8, Interior(1) 2-1-8 to 6-9-1, Exterior(2E) 6-9-1 to 9-2-15, Exterior(2R) 9-2-15 to 13-5-14, Interior(1) 13-5-14 to 16-10-8 zone;C-C for members and forces & MWFRS for reactions shown; Lumber DOL=1.60 plate grip DOL=1.60
3) Provide adequate drainage to prevent water ponding.
4) This truss has been designed for a 10.0 psf bottom chord live load nonconcurrent with any other live loads.
5) * This truss has been designed for a live load of 20.0psf on the bottom chord in all areas where a rectangle 3-6-0 tall by 2-0-0 wide will fit between the bottom chord and any other members.
6) One H2.5A Simpson Strong-Tie connectors recommended to connect truss to bearing walls due to UPLIFT at jt(s) 2 and 5. This connection is for uplift only and does not consider lateral forces.
7) This truss is designed in accordance with the 2018 International Residential Code sections R502.11.1 and R802.10.2 and referenced standard ANSI/TPI 1.
8) Graphical purlin representation does not depict the size or the orientation of the purlin along the top and/or bottom chord.

December 2,2021

WARNING - Verify design parameters and READ NOTES ON THIS AND INCLUDED MITEK REFERENCE PAGE MII-7473 rev. 5/19/2020 BEFORE USE.
Design valid for use only with MiTek® connectors. This design is based only upon parameters shown, and is for an individual building component, not a truss system. Before use, the building designer must verify the applicability of design parameters and properly incorporate this design into the overall building design. Bracing indicated is to prevent buckling of individual truss web and/or chord members only. Additional temporary and permanent bracing is always required for stability and to prevent collapse with possible personal injury and property damage. For general guidance regarding the fabrication, storage, delivery, erection and bracing of trusses and truss systems, see **ANSI/TPI1 Quality Criteria, DSB-89 and BCSI Building Component Safety Information** available from Truss Plate Institute, 2670 Crain Highway, Suite 203 Waldorf, MD 20601

ENGINEERING BY TRENCO A MiTek Affiliate
818 Soundside Road
Edenton, NC 27932

Job	Truss	Truss Type	Qty	Ply	KB Home 149.2115.D
149_2115_D	B3	Common	2	1	I49048112 Job Reference (optional)

84 Components (Dunn), Dunn, NC - 28334, 8.520 s Aug 27 2021 MiTek Industries, Inc. Wed Dec 1 15:18:15 2021 Page 1
ID:bNZHYySm82JAWDNgfw9uCLzLbIt-42vsxEwh9j73?BURAnJw75jMrMHZ806x9wUr3AyDIHc

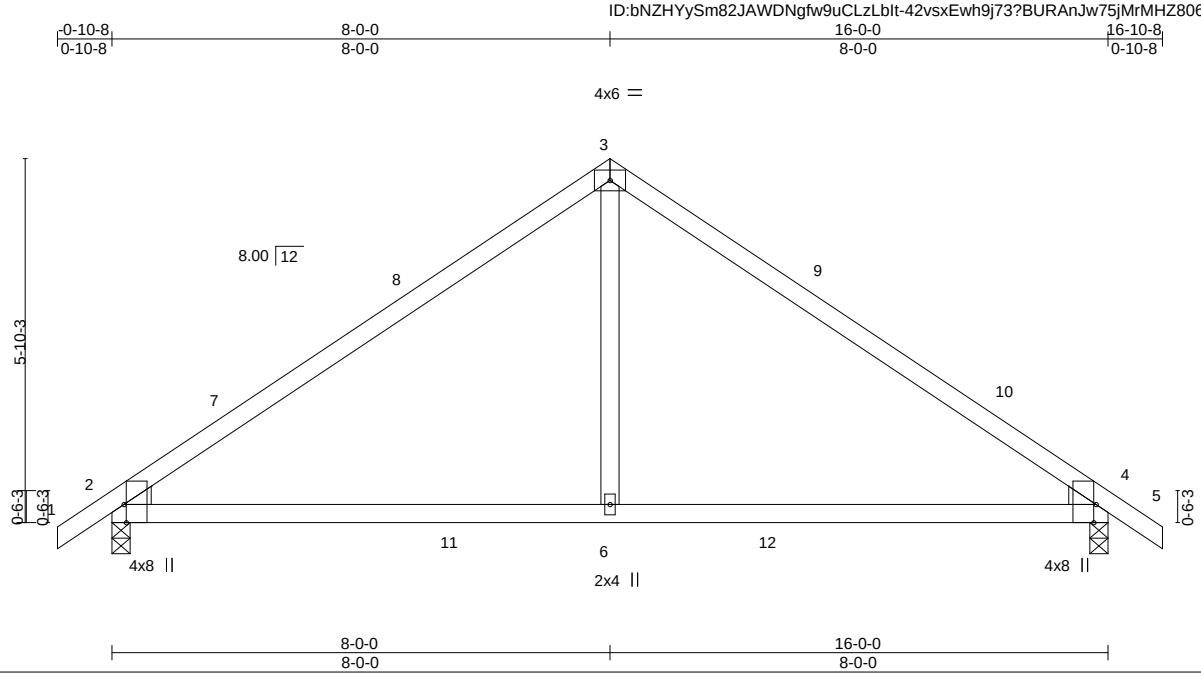

Plate Offsets (X,Y)-- [2:0-3-8,Edge], [4:0-3-8,Edge]

LOADING (psf)		SPACING- 2-0-0		CSI.		DEFL.	in	(loc)	l/defl	L/d	PLATES	GRIP
TCLL	20.0	Plate Grip DOL	1.15	TC	0.76	Vert(LL)	-0.13	2-6	>999	240	MT20	197/144
TCDL	10.0	Lumber DOL	1.15	BC	0.85	Vert(CT)	-0.24	2-6	>788	180		
BCLL	0.0 *	Rep Stress Incr	YES	WB	0.18	Horz(CT)	0.02	4	n/a	n/a		
BCDL	10.0	Code IRC2018/TPI2014		Matrix-S							Weight: 65 lb	FT = 20%

LUMBER-
TOP CHORD 2x4 SP No.1
BOT CHORD 2x4 SP No.2 or 2x4 SPF No.2
WEBS 2x4 SP No.3
WEDGE
Left: 2x4 SP No.3 , Right: 2x4 SP No.3

BRACING-
TOP CHORD Structural wood sheathing directly applied or 4-8-2 oc purlins.
BOT CHORD Rigid ceiling directly applied or 10-0-0 oc bracing.

REACTIONS. (size) 2=0-3-8, 4=0-3-8
Max Horz 2=139(LC 11)
Max Uplift 2=-74(LC 12), 4=-74(LC 13)
Max Grav 2=790(LC 19), 4=790(LC 20)

FORCES. (lb) - Max. Comp./Max. Ten. - All forces 250 (lb) or less except when shown.
TOP CHORD 2-3=-863/103, 3-4=-863/103
BOT CHORD 2-6=0/667, 4-6=0/667
WEBS 3-6=0/479

NOTES-
1) Unbalanced roof live loads have been considered for this design.
2) Wind: ASCE 7-16; Vult=130mph (3-second gust) Vasd=103mph; TCDL=6.0psf; BCDL=6.0psf; h=25ft; Cat. II; Exp B; Enclosed; MWFRS (envelope) gable end zone and C-C Exterior(2E) -0-10-8 to 2-1-8, Interior(1) 2-1-8 to 8-0-0, Exterior(2R) 8-0-0 to 11-0-0, Interior(1) 11-0-0 to 16-10-8 zone;C-C for members and forces & MWFRS for reactions shown; Lumber DOL=1.60 plate grip DOL=1.60
3) This truss has been designed for a 10.0 psf bottom chord live load nonconcurrent with any other live loads.
4) * This truss has been designed for a live load of 20.0psf on the bottom chord in all areas where a rectangle 3-6-0 tall by 2-0-0 wide will fit between the bottom chord and any other members, with BCDL = 10.0psf.
5) One H2.5A Simpson Strong-Tie connectors recommended to connect truss to bearing walls due to UPLIFT at jt(s) 2 and 4. This connection is for uplift only and does not consider lateral forces.
6) This truss is designed in accordance with the 2018 International Residential Code sections R502.11.1 and R802.10.2 and referenced standard ANSI/TPI 1.

December 2,2021

WARNING - Verify design parameters and READ NOTES ON THIS AND INCLUDED MITEK REFERENCE PAGE MII-7473 rev. 5/19/2020 BEFORE USE.
Design valid for use only with MiTek® connectors. This design is based only upon parameters shown, and is for an individual building component, not a truss system. Before use, the building designer must verify the applicability of design parameters and properly incorporate this design into the overall building design. Bracing indicated is to prevent buckling of individual truss web and/or chord members only. Additional temporary and permanent bracing is always required for stability and to prevent collapse with possible personal injury and property damage. For general guidance regarding the fabrication, storage, delivery, erection and bracing of trusses and truss systems, see **ANSI/TPI1 Quality Criteria, DSB-89 and BCSI Building Component Safety Information** available from Truss Plate Institute, 2670 Crain Highway, Suite 203 Waldorf, MD 20601

ENGINEERING BY TRENCO A MiTek Affiliate
818 Soundside Road
Edenton, NC 27932

Job	Truss	Truss Type	Qty	Ply	KB Home 149.2115.D
149_2115_D	B4	Common	1	1	I49048113 Job Reference (optional)

84 Components (Dunn), Dunn, NC - 28334, 8.520 s Aug 27 2021 MiTek Industries, Inc. Wed Dec 1 15:18:15 2021 Page 1
ID:bNZHYySm82JAWDNgfw9uCLzLbIt-42vsxEwh9j73?BURAnJw75jL2MHb805x9wUr3AyDIHc

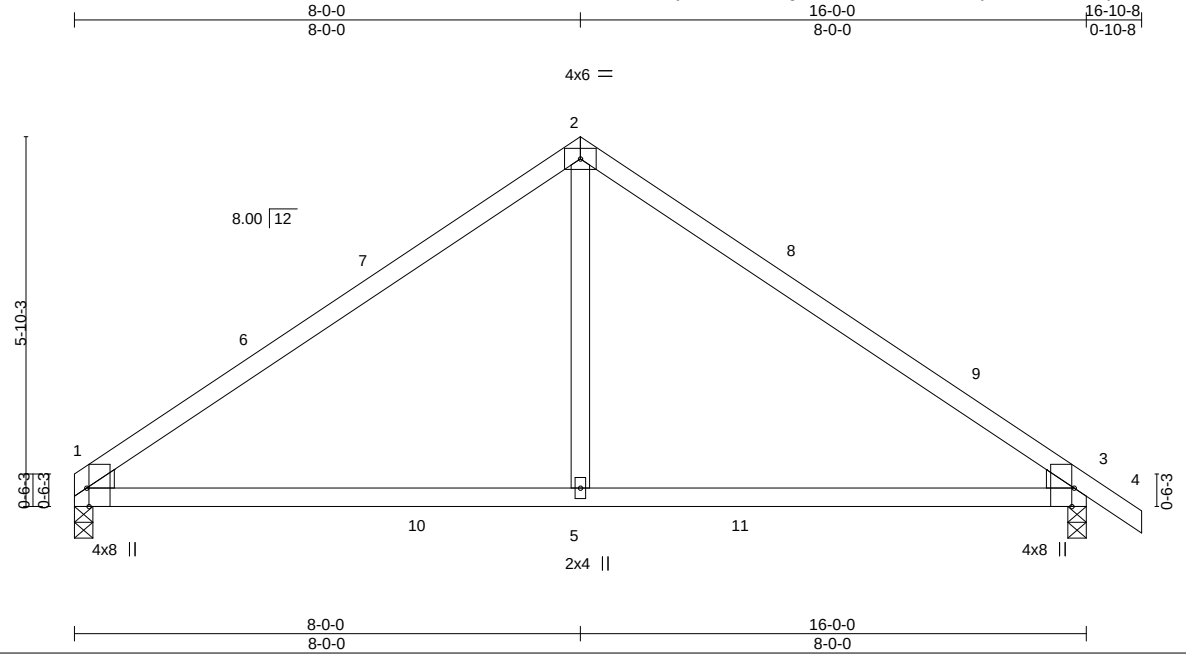

Plate Offsets (X,Y)-- [1:0-3-8,Edge], [3:0-3-8,Edge]

LOADING (psf)		SPACING- 2-0-0		CSI.		DEFL.	in	(loc)	l/defl	L/d	PLATES	GRIP
TCLL	20.0	Plate Grip DOL	1.15	TC	0.81	Vert(LL)	-0.13	3-5	>999	240	MT20	197/144
TCDL	10.0	Lumber DOL	1.15	BC	0.84	Vert(CT)	-0.24	3-5	>793	180		
BCLL	0.0 *	Rep Stress Incr	YES	WB	0.18	Horz(CT)	0.02	3	n/a	n/a		
BCDL	10.0	Code IRC2018/TPI2014		Matrix-S							Weight: 64 lb	FT = 20%

LUMBER-
TOP CHORD 2x4 SP No.1
BOT CHORD 2x4 SP No.2 or 2x4 SPF No.2
WEBS 2x4 SP No.3
WEDGE
Left: 2x4 SP No.3 , Right: 2x4 SP No.3

BRACING-
TOP CHORD Structural wood sheathing directly applied or 2-4-4 oc purlins.
BOT CHORD Rigid ceiling directly applied or 10-0-0 oc bracing.

REACTIONS. (size) 3=0-3-8, 1=0-3-8
Max Horz 1=-136(LC 10)
Max Uplift 3=-74(LC 13), 1=-53(LC 12)
Max Grav 3=791(LC 20), 1=731(LC 19)

FORCES. (lb) - Max. Comp./Max. Ten. - All forces 250 (lb) or less except when shown.
TOP CHORD 1-2=-864/103, 2-3=-866/103
BOT CHORD 1-5=0/671, 3-5=0/671
WEBS 2-5=0/481

NOTES-
1) Unbalanced roof live loads have been considered for this design.
2) Wind: ASCE 7-16; Vult=130mph (3-second gust) Vasd=103mph; TCDL=6.0psf; BCDL=6.0psf; h=25ft; Cat. II; Exp B; Enclosed; MWFRS (envelope) gable end zone and C-C Exterior(2E) 0-1-12 to 3-1-12, Interior(1) 3-1-12 to 8-0-0, Exterior(2R) 8-0-0 to 11-0-0, Interior(1) 11-0-0 to 16-10-8 zone;C-C for members and forces & MWFRS for reactions shown; Lumber DOL=1.60 plate grip DOL=1.60
3) This truss has been designed for a 10.0 psf bottom chord live load nonconcurrent with any other live loads.
4) * This truss has been designed for a live load of 20.0psf on the bottom chord in all areas where a rectangle 3-6-0 tall by 2-0-0 wide will fit between the bottom chord and any other members, with BCDL = 10.0psf.
5) One H2.5A Simpson Strong-Tie connectors recommended to connect truss to bearing walls due to UPLIFT at jt(s) 3 and 1. This connection is for uplift only and does not consider lateral forces.
6) This truss is designed in accordance with the 2018 International Residential Code sections R502.11.1 and R802.10.2 and referenced standard ANSI/TPI 1.

December 2,2021

WARNING - Verify design parameters and READ NOTES ON THIS AND INCLUDED MITEK REFERENCE PAGE MII-7473 rev. 5/19/2020 BEFORE USE.
Design valid for use only with MiTek® connectors. This design is based only upon parameters shown, and is for an individual building component, not a truss system. Before use, the building designer must verify the applicability of design parameters and properly incorporate this design into the overall building design. Bracing indicated is to prevent buckling of individual truss web and/or chord members only. Additional temporary and permanent bracing is always required for stability and to prevent collapse with possible personal injury and property damage. For general guidance regarding the fabrication, storage, delivery, erection and bracing of trusses and truss systems, see **ANSI/TPI1 Quality Criteria, DSB-89 and BCSI Building Component Safety Information** available from Truss Plate Institute, 2670 Crain Highway, Suite 203 Waldorf, MD 20601

ENGINEERING BY TRENCO A MiTek Affiliate
818 Soundside Road
Edenton, NC 27932

Job	Truss	Truss Type	Qty	Ply	KB Home 149.2115.D
149_2115_D	BE	Hip Supported Gable	1	1	I49048114 Job Reference (optional)

84 Components (Dunn), Dunn, NC - 28334, 8.520 s Aug 27 2021 MiTek Industries, Inc. Wed Dec 1 15:18:16 2021 Page 1
ID:bNZHYySm82JAWDNgfw9uCLzLbIt-YETE9axJw1FwdL3ekUq9fJGiflqQtVh4OaEPbdyDIHb

-0-10-8 | 3-9-1 | 12-2-15 | 16-0-0 | 16-10-8
0-10-8 | 3-9-1 | 8-5-15 | 3-9-1 | 0-10-8

Scale = 1:29.4

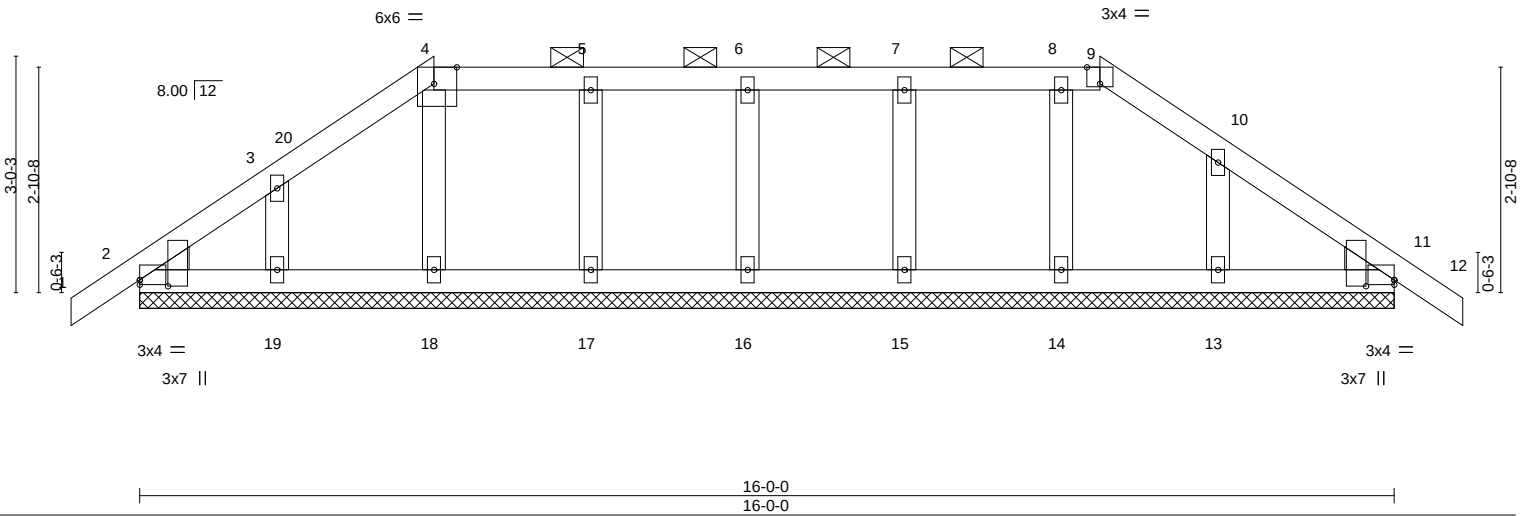

Plate Offsets (X,Y)-- [2:0-0-0,0-0-12], [2:0-0-15,0-4-5], [4:0-3-8,Edge], [9:0-2-0,Edge], [11:0-0-15,0-4-5], [11:0-0-0,0-0-12]

LOADING (psf)		SPACING- 2-0-0		CSI.		DEFL.	in	(loc)	l/defl	L/d	PLATES	GRIP
TCLL	20.0	Plate Grip DOL	1.15	TC	0.05	Vert(LL)	-0.00	11	n/r	120	MT20	197/144
TCDL	10.0	Lumber DOL	1.15	BC	0.04	Vert(CT)	0.00	11	n/r	120		
BCLL	0.0 *	Rep Stress Incr	YES	WB	0.03	Horz(CT)	0.00	11	n/a	n/a		
BCDL	10.0	Code IRC2018/TPI2014		Matrix-S							Weight: 76 lb	FT = 20%

LUMBER-
TOP CHORD 2x4 SP No.2 or 2x4 SPF No.2
BOT CHORD 2x4 SP No.2 or 2x4 SPF No.2
OTHERS 2x4 SP No.3
WEDGE
Left: 2x4 SP No.3 , Right: 2x4 SP No.3

BRACING-
TOP CHORD Structural wood sheathing directly applied or 6-0-0 oc purlins, except 2-0-0 oc purlins (6-0-0 max.): 4-9.
BOT CHORD Rigid ceiling directly applied or 10-0-0 oc bracing.

REACTIONS. All bearings 16-0-0.
(lb) - Max Horz 2=-71(LC 10)
Max Uplift All uplift 100 lb or less at joint(s) 2, 11, 18, 19, 17, 16, 15, 14, 13
Max Grav All reactions 250 lb or less at joint(s) 2, 11, 18, 19, 17, 16, 15, 14, 13

FORCES. (lb) - Max. Comp./Max. Ten. - All forces 250 (lb) or less except when shown.

NOTES-
1) Unbalanced roof live loads have been considered for this design.
2) Wind: ASCE 7-16; Vult=130mph (3-second gust) Vasd=103mph; TCDL=6.0psf; BCDL=6.0psf; h=25ft; Cat. II; Exp B; Enclosed; MWFRS (envelope) gable end zone and C-C Corner(3E) -0-10-8 to 2-1-8, Exterior(2N) 2-1-8 to 3-9-1, Corner(3R) 3-9-1 to 6-9-1, Exterior(2N) 6-9-1 to 12-2-15, Corner(3R) 12-2-15 to 15-2-15, Exterior(2N) 15-2-15 to 16-10-8 zone;C-C for members and forces & MWFRS for reactions shown; Lumber DOL=1.60 plate grip DOL=1.60
3) Truss designed for wind loads in the plane of the truss only. For studs exposed to wind (normal to the face), see Standard Industry Gable End Details as applicable, or consult qualified building designer as per ANSI/TPI 1.
4) Provide adequate drainage to prevent water ponding.
5) All plates are 2x4 MT20 unless otherwise indicated.
6) Gable requires continuous bottom chord bearing.
7) Gable studs spaced at 2-0-0 oc.
8) This truss has been designed for a 10.0 psf bottom chord live load nonconcurrent with any other live loads.
9) * This truss has been designed for a live load of 20.0psf on the bottom chord in all areas where a rectangle 3-6-0 tall by 2-0-0 wide will fit between the bottom chord and any other members.
10) N/A

11) This truss is designed in accordance with the 2018 International Residential Code sections R502.11.1 and R802.10.2 and referenced standard ANSI/TPI 1.
12) Graphical purlin representation does not depict the size or the orientation of the purlin along the top and/or bottom chord.

December 2,2021

WARNING - Verify design parameters and READ NOTES ON THIS AND INCLUDED MITEK REFERENCE PAGE MII-7473 rev. 5/19/2020 BEFORE USE.
Design valid for use only with MiTek® connectors. This design is based only upon parameters shown, and is for an individual building component, not a truss system. Before use, the building designer must verify the applicability of design parameters and properly incorporate this design into the overall building design. Bracing indicated is to prevent buckling of individual truss web and/or chord members only. Additional temporary and permanent bracing is always required for stability and to prevent collapse with possible personal injury and property damage. For general guidance regarding the fabrication, storage, delivery, erection and bracing of trusses and truss systems, see **ANSI/TPI1 Quality Criteria, DSB-89 and BCSI Building Component Safety Information** available from Truss Plate Institute, 2670 Crain Highway, Suite 203 Waldorf, MD 20601

ENGINEERING BY TRENCO A MiTek Affiliate
818 Soundside Road
Edenton, NC 27932

Job	Truss	Truss Type	Qty	Ply	KB Home 149.2115.D
149_2115_D	BG	Common Girder	1	3	I49048115 Job Reference (optional)

84 Components (Dunn), Dunn, NC - 28334, 8.520 s Aug 27 2021 MiTek Industries, Inc. Wed Dec 1 15:18:18 2021 Page 1
ID:bNZHYySm82JAWDNgfw9uCLzLbIt-Udb?aFzZSeVeseD0rvsdlkLyYZPlKB5NrujWgVyDIHZ

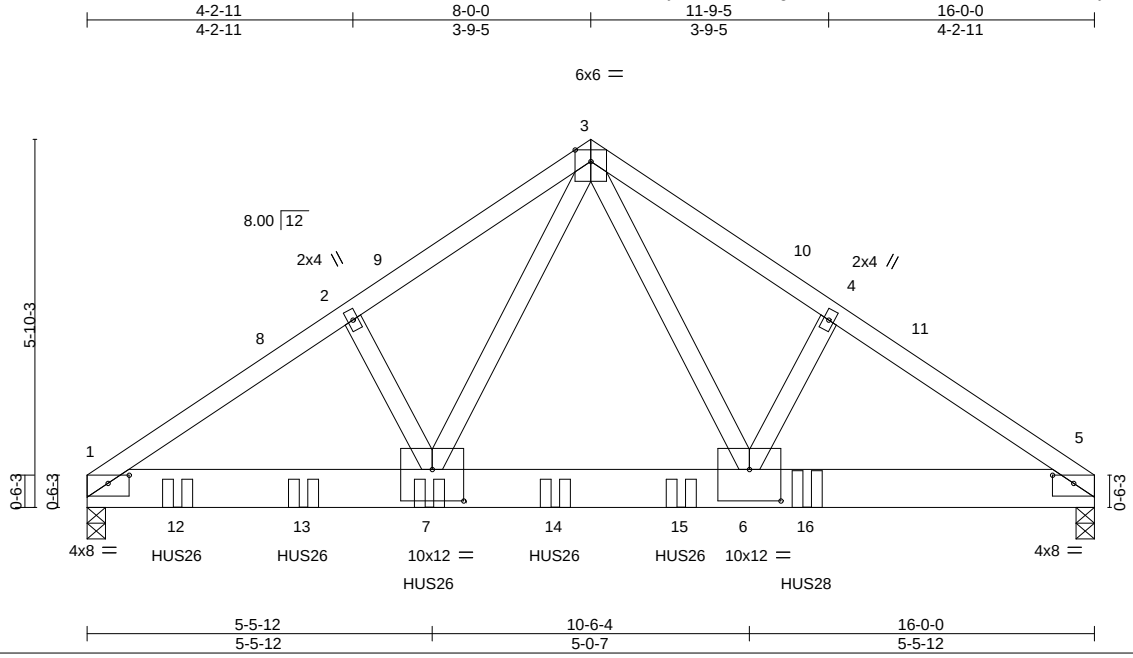

Plate Offsets (X,Y)-- [1:0-4-0,0-1-9], [5:0-4-0,0-1-9], [6:0-6-0,0-6-0], [7:0-6-0,0-6-0]

LOADING (psf)		SPACING- 2-0-0		CSI.		DEFL.	in	(loc)	l/defl	L/d	PLATES	GRIP
TCLL	20.0	Plate Grip DOL	1.15	TC	0.41	Vert(LL)	-0.07	6-7	>999	240	MT20	244/190
TCDL	10.0	Lumber DOL	1.15	BC	0.43	Vert(CT)	-0.15	6-7	>999	180		
BCLL	0.0 *	Rep Stress Incr	NO	WB	0.94	Horz(CT)	0.02	5	n/a	n/a		
BCDL	10.0	Code IRC2018/TPI2014		Matrix-S							Weight: 309 lb	FT = 20%

LUMBER-
TOP CHORD 2x4 SP No.2
BOT CHORD 2x8 SP DSS
WEBS 2x4 SP No.3

BRACING-
TOP CHORD Structural wood sheathing directly applied or 6-0-0 oc purlins.
BOT CHORD Rigid ceiling directly applied or 10-0-0 oc bracing.

REACTIONS. (size) 1=(0-3-8 + TBE4 Simpson Strong-Tie) (req. 0-4-5), 5=0-3-8
Max Horz 1=-126(LC 33)
Max Uplift 1=-812(LC 12), 5=-1015(LC 13)
Max Grav 1=8211(LC 2), 5=6028(LC 1)

FORCES. (lb) - Max. Comp./Max. Ten. - All forces 250 (lb) or less except when shown.
TOP CHORD 1-2=-10369/1166, 2-3=-10242/1206, 3-4=-9622/1617, 4-5=-9782/1579
BOT CHORD 1-7=-956/8463, 6-7=-716/5666, 5-6=-1241/7951
WEBS 3-6=-1247/5445, 4-6=-234/280, 3-7=-438/6778, 2-7=-226/264

NOTES-
1) 3-ply truss to be connected together with 10d (0.131"x3") nails as follows:
Top chords connected as follows: 2x4 - 1 row at 0-9-0 oc.
Bottom chords connected as follows: 2x8 - 3 rows staggered at 0-4-0 oc.
Webs connected as follows: 2x4 - 1 row at 0-9-0 oc.
2) All loads are considered equally applied to all plies, except if noted as front (F) or back (B) face in the LOAD CASE(S) section. Ply to ply connections have been provided to distribute only loads noted as (F) or (B), unless otherwise indicated.
3) Unbalanced roof live loads have been considered for this design.
4) Wind: ASCE 7-16; Vult=130mph (3-second gust) Vasd=103mph; TCDL=6.0psf; BCDL=6.0psf; h=25ft; Cat. II; Exp B; Enclosed; MWFRS (envelope) gable end zone and C-C Exterior(2E) 0-1-12 to 3-1-12, Interior(1) 3-1-12 to 8-0-0, Exterior(2R) 8-0-0 to 11-0-0, Interior(1) 11-0-0 to 15-10-4 zone;C-C for members and forces & MWFRS for reactions shown; Lumber DOL=1.60 plate grip DOL=1.60
5) This truss has been designed for a 10.0 psf bottom chord live load nonconcurrent with any other live loads.
6) * This truss has been designed for a live load of 20.0psf on the bottom chord in all areas where a rectangle 3-6-0 tall by 2-0-0 wide will fit between the bottom chord and any other members.
7) TBE4 Simpson Strong-Tie connectors recommended to connect truss to bearing walls due to UPLIFT at jt(s) 1. This connection is for uplift only and does not consider lateral forces.
8) Two H2.5A Simpson Strong-Tie connectors recommended to connect truss to bearing walls due to UPLIFT at jt(s) 5. This connection is for uplift only and does not consider lateral forces.
9) This truss is designed in accordance with the 2018 International Residential Code sections R502.11.1 and R802.10.2 and referenced standard ANSI/TPI 1.
10) Use Simpson Strong-Tie HUS26 (14-10d Girder, 6-10d Truss) or equivalent spaced at 2-0-0 oc max. starting at 1-5-4 from the left end to 7-5-4 to connect truss(es) to back face of bottom chord.
11) Use Simpson Strong-Tie HUS26 (14-10d Girder, 6-10d Truss, Single Ply Girder) or equivalent at 9-5-4 from the left end to connect truss(es) to back face of bottom chord.
12) Use Simpson Strong-Tie HUS28 (22-16d Girder, 4-16d Truss) or equivalent at 11-5-4 from the left end to connect truss(es) to back face of bottom chord.

December 2,2021

Continued on page 2

WARNING - Verify design parameters and READ NOTES ON THIS AND INCLUDED MITEK REFERENCE PAGE MII-7473 rev. 5/19/2020 BEFORE USE.
Design valid for use only with MiTek® connectors. This design is based only upon parameters shown, and is for an individual building component, not a truss system. Before use, the building designer must verify the applicability of design parameters and properly incorporate this design into the overall building design. Bracing indicated is to prevent buckling of individual truss web and/or chord members only. Additional temporary and permanent bracing is always required for stability and to prevent collapse with possible personal injury and property damage. For general guidance regarding the fabrication, storage, delivery, erection and bracing of trusses and truss systems, see **ANSI/TPI1 Quality Criteria, DSB-89 and BCSI Building Component Safety Information** available from Truss Plate Institute, 2670 Crain Highway, Suite 203 Waldorf, MD 20601

ENGINEERING BY TRENCO A MiTek Affiliate
818 Soundside Road
Edenton, NC 27932

NOTES-

13) Fill all nail holes where hanger is in contact with lumber.

LOAD CASE(S) Standard

1) Dead + Roof Live (balanced): Lumber Increase=1.15, Plate Increase=1.15
   Uniform Loads (plf)
   Vert: 1-3=-60, 3-5=-60, 1-5=-20
   Concentrated Loads (lb)
   Vert: 7=-1938(B) 12=-1938(B) 13=-1938(B) 14=-1938(B) 15=-1938(B) 16=-2964(B)

WARNING - Verify design parameters and READ NOTES ON THIS AND INCLUDED MITEK REFERENCE PAGE MII-7473 rev. 5/19/2020 BEFORE USE.
Design valid for use only with MiTek® connectors. This design is based only upon parameters shown, and is for an individual building component, not a truss system. Before use, the building designer must verify the applicability of design parameters and properly incorporate this design into the overall building design. Bracing indicated is to prevent buckling of individual truss web and/or chord members only. Additional temporary and permanent bracing is always required for stability and to prevent collapse with possible personal injury and property damage. For general guidance regarding the fabrication, storage, delivery, erection and bracing of trusses and truss systems, see **ANSI/TPI1 Quality Criteria, DSB-89 and BCSI Building Component Safety Information** available from Truss Plate Institute, 2670 Crain Highway, Suite 203 Waldorf, MD 20601

ENGINEERING BY TRENCO A MiTek Affiliate
818 Soundside Road
Edenton, NC 27932

Job	Truss	Truss Type	Qty	Ply	KB Home 149.2115.D
149_2115_D	H1	Hip	1	1	I49048116 Job Reference (optional)

84 Components (Dunn), Dunn, NC - 28334, 8.520 s Aug 27 2021 MiTek Industries, Inc. Wed Dec 1 15:18:19 2021 Page 1
ID:bNZHYySm82JAWDNgfw9uCLzLbIt-yp9NnbzBDydVUooDPdNsHxu3Ozix3efW4YS3CyyDIHY

-0-10-8 | 6-11-0 | 13-3-8 | 19-8-0 | 25-0-0 | 30-4-0 | 36-8-8 | 43-1-0 | 50-0-0
0-10-8 | 6-11-0 | 6-4-8 | 6-4-8 | 5-4-0 | 5-4-0 | 6-4-8 | 6-4-8 | 6-11-0

Scale = 1:87.8

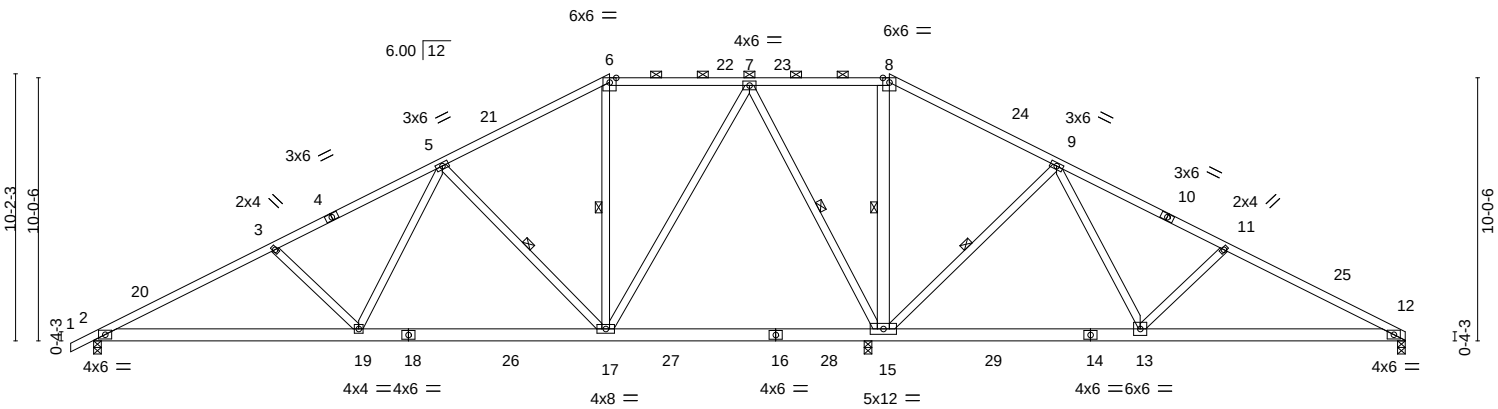

10-1-4 | 19-8-0 | 25-0-0 | 29-8-0 | 30-4-0 | 39-10-12 | 50-0-0
10-1-4 | 9-6-12 | 5-4-0 | 4-8-0 | 0-8-0 | 9-6-12 | 10-1-4

LOADING (psf)		SPACING- 2-0-0		CSI.		DEFL. in (loc) l/defl L/d		PLATES GRIP
TCLL	20.0	Plate Grip DOL	1.15	TC	0.66	Vert(LL) -0.11 15-17 >999 240		MT20 197/144
TCDL	10.0	Lumber DOL	1.15	BC	0.63	Vert(CT) -0.22 2-19 >999 180		
BCLL	0.0 *	Rep Stress Incr	YES	WB	0.91	Horz(CT) 0.02 15 n/a n/a		
BCDL	10.0	Code IRC2018/TPI2014		Matrix-S				Weight: 327 lb FT = 20%

LUMBER-
TOP CHORD 2x4 SP No.2 or 2x4 SPF No.2
BOT CHORD 2x6 SP No.2
WEBS 2x4 SP No.3 *Except*
8-15: 2x6 SP No.2

BRACING-
TOP CHORD Structural wood sheathing directly applied or 3-10-0 oc purlins, except
2-0-0 oc purlins (6-0-0 max.): 6-8.
BOT CHORD Rigid ceiling directly applied or 6-0-0 oc bracing.
WEBS 1 Row at midpt 5-17, 6-17, 7-15, 8-15, 9-15

REACTIONS. (size) 12=0-3-8, 15=(0-3-8 + H10A Simpson Strong-Tie) (req. 0-4-13), 2=0-3-8
Max Horz 2=169(LC 12)
Max Uplift 12=-92(LC 13), 15=-105(LC 13), 2=-135(LC 12)
Max Grav 12=460(LC 26), 15=3055(LC 2), 2=1098(LC 27)

FORCES. (lb) - Max. Comp./Max. Ten. - All forces 250 (lb) or less except when shown.
TOP CHORD 2-3=-1760/227, 3-5=-1512/198, 5-6=-585/136, 6-7=-458/156, 7-8=0/934, 8-9=-20/1083, 9-11=-252/310, 11-12=-553/210
BOT CHORD 2-19=-280/1513, 17-19=-118/980, 15-17=-275/260, 13-15=-435/143, 12-13=-155/425
WEBS 3-19=-381/209, 5-19=-36/709, 5-17=-765/241, 7-17=-111/1207, 7-15=-1506/168, 8-15=-737/99, 9-15=-793/241, 9-13=-37/729, 11-13=-399/219

NOTES-
1) Unbalanced roof live loads have been considered for this design.
2) Wind: ASCE 7-16; Vult=130mph (3-second gust) Vasd=103mph; TCDL=6.0psf; BCDL=6.0psf; h=25ft; Cat. II; Exp B; Enclosed; MWFRS (envelope) gable end zone and C-C Exterior(2E) -0-10-8 to 2-1-8, Interior(1) 2-1-8 to 19-8-0, Exterior(2R) 19-8-0 to 23-10-15, Interior(1) 23-10-15 to 30-4-0, Exterior(2R) 30-4-0 to 34-6-15, Interior(1) 34-6-15 to 49-10-4 zone;C-C for members and forces & MWFRS for reactions shown; Lumber DOL=1.60 plate grip DOL=1.60
3) Provide adequate drainage to prevent water ponding.
4) This truss has been designed for a 10.0 psf bottom chord live load nonconcurrent with any other live loads.
5) * This truss has been designed for a live load of 20.0psf on the bottom chord in all areas where a rectangle 3-6-0 tall by 2-0-0 wide will fit between the bottom chord and any other members, with BCDL = 10.0psf.
6) H10A Simpson Strong-Tie connectors recommended to connect truss to bearing walls due to UPLIFT at jt(s) 15. This connection is for uplift only and does not consider lateral forces.
7) One H2.5A Simpson Strong-Tie connectors recommended to connect truss to bearing walls due to UPLIFT at jt(s) 12 and 2. This connection is for uplift only and does not consider lateral forces.
8) This truss is designed in accordance with the 2018 International Residential Code sections R502.11.1 and R802.10.2 and referenced standard ANSI/TPI 1.
9) Graphical purlin representation does not depict the size or the orientation of the purlin along the top and/or bottom chord.

December 2,2021

WARNING - Verify design parameters and READ NOTES ON THIS AND INCLUDED MITEK REFERENCE PAGE MII-7473 rev. 5/19/2020 BEFORE USE.
Design valid for use only with MiTek® connectors. This design is based only upon parameters shown, and is for an individual building component, not a truss system. Before use, the building designer must verify the applicability of design parameters and properly incorporate this design into the overall building design. Bracing indicated is to prevent buckling of individual truss web and/or chord members only. Additional temporary and permanent bracing is always required for stability and to prevent collapse with possible personal injury and property damage. For general guidance regarding the fabrication, storage, delivery, erection and bracing of trusses and truss systems, see **ANSI/TPI1 Quality Criteria, DSB-89 and BCSI Building Component Safety Information** available from Truss Plate Institute, 2670 Crain Highway, Suite 203 Waldorf, MD 20601

ENGINEERING BY TRENCO A MiTek Affiliate
818 Soundside Road
Edenton, NC 27932

Job	Truss	Truss Type	Qty	Ply	KB Home 149.2115.D
149_2115_D	H2	Hip	1	1	I49048117 Job Reference (optional)

84 Components (Dunn), Dunn, NC - 28334, 8.520 s Aug 27 2021 MiTek Industries, Inc. Wed Dec 1 15:18:21 2021 Page 1
ID:bNZHYySm82JAWDNgfw9uCLzLbIt-uCG7CH?SlZtDj6ybX2PKMMzPlmN?XYBpYsxAHqyDIHW

-0-10-8	6-0-5	11-6-3	17-0-0	23-4-0	33-0-0	38-5-13	43-11-11	50-0-0
0-10-8	6-0-5	5-5-13	5-5-13	6-4-0	9-8-0	5-5-13	5-5-13	6-0-5

Scale = 1:88.3

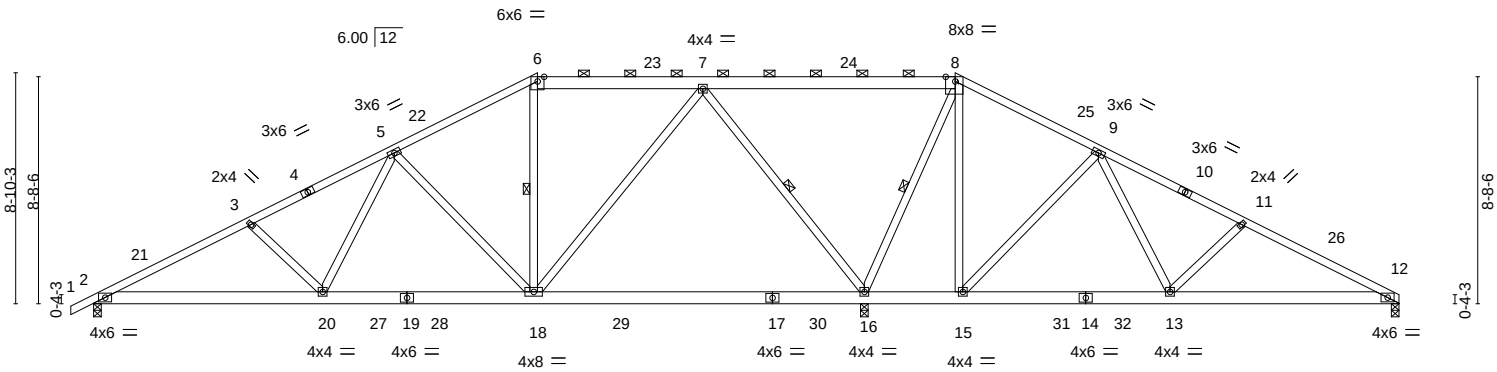

8-9-4	17-0-0	29-6-4	33-0-0	41-2-12	50-0-0
8-9-4	8-2-12	12-6-4	3-5-12	8-2-12	8-9-4

Plate Offsets (X,Y)-- [8:0-4-6,Edge]

LOADING (psf)		SPACING- 2-0-0		CSI.		DEFL.	in	(loc)	l/defl	L/d	PLATES	GRIP
TCLL	20.0	Plate Grip DOL	1.15	TC	0.67	Vert(LL)	-0.25	16-18	>999	240	MT20	197/144
TCDL	10.0	Lumber DOL	1.15	BC	0.65	Vert(CT)	-0.39	16-18	>902	180		
BCLL	0.0 *	Rep Stress Incr	YES	WB	0.91	Horz(CT)	0.02	16	n/a	n/a		
BCDL	10.0	Code IRC2018/TPI2014		Matrix-S							Weight: 330 lb	FT = 20%

LUMBER-
TOP CHORD 2x4 SP No.2 or 2x4 SPF No.2 *Except* 6-8: 2x6 SP No.2
BOT CHORD 2x6 SP No.2
WEBS 2x4 SP No.3

BRACING-
TOP CHORD Structural wood sheathing directly applied or 4-0-6 oc purlins, except 2-0-0 oc purlins (6-0-0 max.): 6-8.
BOT CHORD Rigid ceiling directly applied or 6-0-0 oc bracing.
WEBS 1 Row at midpt 6-18, 7-16, 8-16

REACTIONS. (size) 12=0-3-8, 16=(0-3-8 + H10A Simpson Strong-Tie) (req. 0-4-11), 2=0-3-8
Max Horz 2=147(LC 12)
Max Uplift 12=-104(LC 13), 16=-52(LC 12), 2=-131(LC 12)
Max Grav 12=496(LC 26), 16=2984(LC 2), 2=1072(LC 27)

FORCES. (lb) - Max. Comp./Max. Ten. - All forces 250 (lb) or less except when shown.
TOP CHORD 2-3=-1755/222, 3-5=-1541/198, 5-6=-803/136, 6-7=-666/150, 7-8=0/1071, 8-9=-7/695, 9-11=-439/180, 11-12=-701/208
BOT CHORD 2-20=-264/1515, 18-20=-120/1083, 15-16=-583/166, 13-15=-259/120, 12-13=-122/565
WEBS 3-20=-326/180, 5-20=-42/555, 5-18=-616/211, 7-18=-63/1064, 7-16=-1650/226, 8-16=-1262/178, 8-15=-110/534, 9-15=-689/195, 9-13=-25/665, 11-13=-348/190

NOTES-
1) Unbalanced roof live loads have been considered for this design.
2) Wind: ASCE 7-16; Vult=130mph (3-second gust) Vasd=103mph; TCDL=6.0psf; BCDL=6.0psf; h=25ft; Cat. II; Exp B; Enclosed; MWFRS (envelope) gable end zone and C-C Exterior(2E) -0-10-8 to 2-1-8, Interior(1) 2-1-8 to 17-0-0, Exterior(2R) 17-0-0 to 21-2-15, Interior(1) 21-2-15 to 33-0-0, Exterior(2R) 33-0-0 to 37-2-15, Interior(1) 37-2-15 to 49-10-4 zone;C-C for members and forces & MWFRS for reactions shown; Lumber DOL=1.60 plate grip DOL=1.60
3) Provide adequate drainage to prevent water ponding.
4) This truss has been designed for a 10.0 psf bottom chord live load nonconcurrent with any other live loads.
5) * This truss has been designed for a live load of 20.0psf on the bottom chord in all areas where a rectangle 3-6-0 tall by 2-0-0 wide will fit between the bottom chord and any other members, with BCDL = 10.0psf.
6) H10A Simpson Strong-Tie connectors recommended to connect truss to bearing walls due to UPLIFT at jt(s) 16. This connection is for uplift only and does not consider lateral forces.
7) One H2.5A Simpson Strong-Tie connectors recommended to connect truss to bearing walls due to UPLIFT at jt(s) 12 and 2. This connection is for uplift only and does not consider lateral forces.
8) This truss is designed in accordance with the 2018 International Residential Code sections R502.11.1 and R802.10.2 and referenced standard ANSI/TPI 1.
9) Graphical purlin representation does not depict the size or the orientation of the purlin along the top and/or bottom chord.

December 2,2021

WARNING - Verify design parameters and READ NOTES ON THIS AND INCLUDED MITEK REFERENCE PAGE MII-7473 rev. 5/19/2020 BEFORE USE.
Design valid for use only with MiTek® connectors. This design is based only upon parameters shown, and is for an individual building component, not a truss system. Before use, the building designer must verify the applicability of design parameters and properly incorporate this design into the overall building design. Bracing indicated is to prevent buckling of individual truss web and/or chord members only. Additional temporary and permanent bracing is always required for stability and to prevent collapse with possible personal injury and property damage. For general guidance regarding the fabrication, storage, delivery, erection and bracing of trusses and truss systems, see **ANSI/TPI1 Quality Criteria, DSB-89 and BCSI Building Component Safety Information** available from Truss Plate Institute, 2670 Crain Highway, Suite 203 Waldorf, MD 20601

ENGINEERING BY TRENCO A MiTek Affiliate
818 Soundside Road
Edenton, NC 27932

Job	Truss	Truss Type	Qty	Ply	KB Home 149.2115.D
149_2115_D	H3	Hip	1	1	I49048118 Job Reference (optional)

84 Components (Dunn), Dunn, NC - 28334, 8.520 s Aug 27 2021 MiTek Industries, Inc. Wed Dec 1 15:18:22 2021 Page 1
ID:bNZHYySm82JAWDNgfw9uCLzLbIt-MOqVPd04Wt?4LGWo4lxZvaWXvAlGG?MzmWhjpGyDIHV

-0-10-8	7-5-4	14-4-0	21-5-5	28-6-11	35-8-0	42-6-12	50-0-0
0-10-8	7-5-4	6-10-12	7-1-5	7-1-5	7-1-5	6-10-12	7-5-4

Scale = 1:89.8

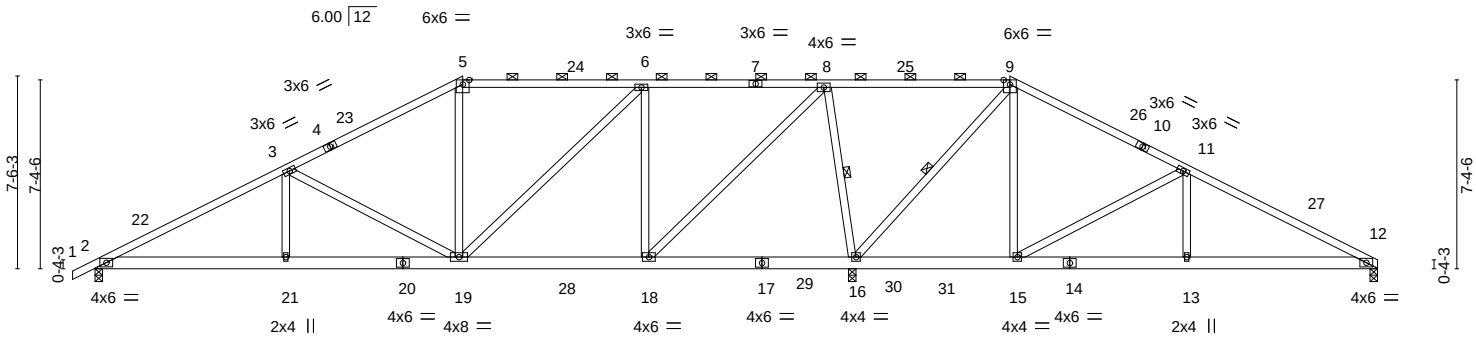

7-5-4	14-4-0	21-5-5	29-6-4	35-8-0	42-6-12	50-0-0
7-5-4	6-10-12	7-1-5	8-0-15	6-1-12	6-10-12	7-5-4

LOADING (psf)		**SPACING-** 2-0-0	**CSI.**		**DEFL.** in (loc) l/defl L/d	**PLATES**	**GRIP**
TCLL	20.0	Plate Grip DOL 1.15	TC	0.84	Vert(LL) -0.07 18-19 >999 240	MT20	197/144
TCDL	10.0	Lumber DOL 1.15	BC	0.52	Vert(CT) -0.14 2-21 >999 180		
BCLL	0.0 *	Rep Stress Incr YES	WB	0.85	Horz(CT) 0.03 12 n/a n/a		
BCDL	10.0	Code IRC2018/TPI2014	Matrix-S			Weight: 311 lb	FT = 20%

LUMBER-
TOP CHORD 2x4 SP No.2 or 2x4 SPF No.2
BOT CHORD 2x6 SP No.2
WEBS 2x4 SP No.3

BRACING-
TOP CHORD Structural wood sheathing directly applied or 3-9-3 oc purlins, except 2-0-0 oc purlins (5-1-8 max.): 5-9.
BOT CHORD Rigid ceiling directly applied or 10-0-0 oc bracing, Except: 6-0-0 oc bracing: 16-18,15-16.
WEBS 1 Row at midpt 8-16, 9-16

REACTIONS. (size) 12=0-3-8, 16=(0-3-8 + H10A Simpson Strong-Tie) (req. 0-4-7), 2=0-3-8
Max Horz 2=127(LC 16)
Max Uplift 12=-106(LC 13), 16=-145(LC 9), 2=-124(LC 12)
Max Grav 12=556(LC 28), 16=2826(LC 2), 2=1101(LC 27)

FORCES. (lb) - Max. Comp./Max. Ten. - All forces 250 (lb) or less except when shown.
TOP CHORD 2-3=-1831/180, 3-5=-1130/153, 5-6=-936/170, 6-8=-486/158, 8-9=0/988, 9-11=-85/278, 11-12=-776/185
BOT CHORD 2-21=-190/1568, 19-21=-190/1568, 18-19=-84/489, 16-18=-764/156, 13-15=-86/617, 12-13=-86/617
WEBS 3-21=0/314, 3-19=-725/206, 6-19=-97/660, 6-18=-883/176, 8-18=-113/1647, 8-16=-1542/272, 9-16=-1275/108, 9-15=-26/581, 11-15=-766/207, 11-13=0/329

NOTES-
1) Unbalanced roof live loads have been considered for this design.
2) Wind: ASCE 7-16; Vult=130mph (3-second gust) Vasd=103mph; TCDL=6.0psf; BCDL=6.0psf; h=25ft; Cat. II; Exp B; Enclosed; MWFRS (envelope) gable end zone and C-C Exterior(2E) -0-10-8 to 2-1-8, Interior(1) 2-1-8 to 14-4-0, Exterior(2R) 14-4-0 to 18-6-15, Interior(1) 18-6-15 to 35-8-0, Exterior(2R) 35-8-0 to 39-10-15, Interior(1) 39-10-15 to 49-10-4 zone;C-C for members and forces & MWFRS for reactions shown; Lumber DOL=1.60 plate grip DOL=1.60
3) Provide adequate drainage to prevent water ponding.
4) This truss has been designed for a 10.0 psf bottom chord live load nonconcurrent with any other live loads.
5) * This truss has been designed for a live load of 20.0psf on the bottom chord in all areas where a rectangle 3-6-0 tall by 2-0-0 wide will fit between the bottom chord and any other members, with BCDL = 10.0psf.
6) H10A Simpson Strong-Tie connectors recommended to connect truss to bearing walls due to UPLIFT at jt(s) 16. This connection is for uplift only and does not consider lateral forces.
7) One H2.5A Simpson Strong-Tie connectors recommended to connect truss to bearing walls due to UPLIFT at jt(s) 12 and 2. This connection is for uplift only and does not consider lateral forces.
8) This truss is designed in accordance with the 2018 International Residential Code sections R502.11.1 and R802.10.2 and referenced standard ANSI/TPI 1.
9) Graphical purlin representation does not depict the size or the orientation of the purlin along the top and/or bottom chord.

December 2,2021

WARNING - Verify design parameters and READ NOTES ON THIS AND INCLUDED MITEK REFERENCE PAGE MII-7473 rev. 5/19/2020 BEFORE USE.
Design valid for use only with MiTek® connectors. This design is based only upon parameters shown, and is for an individual building component, not a truss system. Before use, the building designer must verify the applicability of design parameters and properly incorporate this design into the overall building design. Bracing indicated is to prevent buckling of individual truss web and/or chord members only. Additional temporary and permanent bracing is always required for stability and to prevent collapse with possible personal injury and property damage. For general guidance regarding the fabrication, storage, delivery, erection and bracing of trusses and truss systems, see **ANSI/TPI1 Quality Criteria, DSB-89 and BCSI Building Component Safety Information** available from Truss Plate Institute, 2670 Crain Highway, Suite 203 Waldorf, MD 20601

ENGINEERING BY TRENCO A MiTek Affiliate
818 Soundside Road
Edenton, NC 27932

Job	Truss	Truss Type	Qty	Ply	KB Home 149.2115.D
149_2115_D	H4	Hip	1	1	I49048119 Job Reference (optional)

84 Components (Dunn), Dunn, NC - 28334, 8.520 s Aug 27 2021 MiTek Industries, Inc. Wed Dec 1 15:18:24 2021 Page 1
ID:bNZHYySm82JAWDNgfw9uCLzLbIt-JnyGqJ1K2UGoaZgACAz1_?bub_Rjkv7GEqAqt9yDIHT

-0-10-8	6-1-4	11-8-0	18-4-0	25-0-0	31-8-0	38-4-0	43-10-12	50-0-0
0-10-8	6-1-4	5-6-12	6-8-0	6-8-0	6-8-0	6-8-0	5-6-12	6-1-4

Scale = 1:89.8

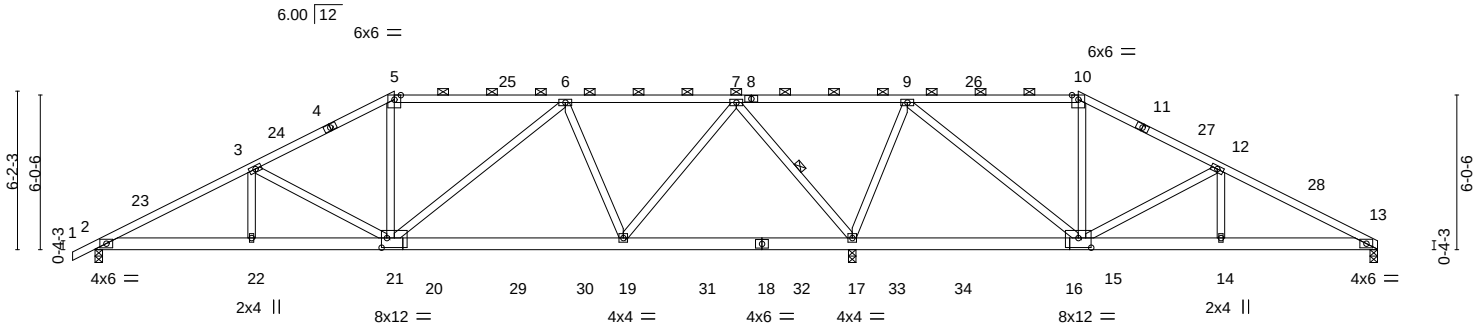

6-1-4	11-8-0	20-7-2	29-6-4	38-4-0	43-10-12	50-0-0
6-1-4	5-6-12	8-11-2	8-11-2	8-9-12	5-6-12	6-1-4

Plate Offsets (X,Y)-- [16:0-6-0,0-4-8], [21:0-2-8,0-4-8]

LOADING (psf)		**SPACING-** 2-0-0		**CSI.**		**DEFL.**	in	(loc)	l/defl	L/d	**PLATES**	**GRIP**
TCLL	20.0	Plate Grip DOL	1.15	TC	0.82	Vert(LL)	-0.09	19-21	>999	240	MT20	197/144
TCDL	10.0	Lumber DOL	1.15	BC	0.46	Vert(CT)	-0.17	19-21	>999	180		
BCLL	0.0 *	Rep Stress Incr	YES	WB	0.84	Horz(CT)	0.03	17	n/a	n/a		
BCDL	10.0	Code IRC2018/TPI2014		Matrix-S							Weight: 301 lb	FT = 20%

LUMBER-
TOP CHORD 2x4 SP No.2 or 2x4 SPF No.2
BOT CHORD 2x6 SP No.2
WEBS 2x4 SP No.3

BRACING-
TOP CHORD Structural wood sheathing directly applied or 3-11-6 oc purlins, except
2-0-0 oc purlins (4-9-4 max.): 5-10.
BOT CHORD Rigid ceiling directly applied or 10-0-0 oc bracing, Except:
6-0-0 oc bracing: 17-19,15-17.
WEBS 1 Row at midpt 7-17

REACTIONS. (size) 13=0-3-8, 17=(0-3-8 + H10A Simpson Strong-Tie) (req. 0-4-6), 2=0-3-8
Max Horz 2=106(LC 12)
Max Uplift 13=-100(LC 13), 17=-229(LC 9), 2=-110(LC 12)
Max Grav 13=551(LC 28), 17=2787(LC 2), 2=1099(LC 27)

FORCES. (lb) - Max. Comp./Max. Ten. - All forces 250 (lb) or less except when shown.
TOP CHORD 2-3=-1884/156, 3-5=-1375/153, 5-6=-1169/164, 6-7=-659/137, 7-9=-40/1190, 10-12=-298/139, 12-13=-826/181
BOT CHORD 2-22=-163/1624, 21-22=-163/1624, 19-21=-135/898, 15-17=-769/122, 14-15=-97/675, 13-14=-97/675
WEBS 3-21=-524/172, 5-21=0/311, 6-21=-52/412, 6-19=-705/156, 7-19=-42/1234, 7-17=-1655/243, 9-17=-1185/195, 9-15=-64/1163, 10-15=-262/90, 12-15=-571/175

NOTES-
1) Unbalanced roof live loads have been considered for this design.
2) Wind: ASCE 7-16; Vult=130mph (3-second gust) Vasd=103mph; TCDL=6.0psf; BCDL=6.0psf; h=25ft; Cat. II; Exp B; Enclosed; MWFRS (envelope) gable end zone and C-C Exterior(2E) -0-10-8 to 2-1-8, Interior(1) 2-1-8 to 11-8-0, Exterior(2R) 11-8-0 to 15-10-15, Interior(1) 15-10-15 to 38-4-0, Exterior(2R) 38-4-0 to 42-6-15, Interior(1) 42-6-15 to 49-10-4 zone;C-C for members and forces & MWFRS for reactions shown; Lumber DOL=1.60 plate grip DOL=1.60
3) Provide adequate drainage to prevent water ponding.
4) All plates are 3x6 MT20 unless otherwise indicated.
5) This truss has been designed for a 10.0 psf bottom chord live load nonconcurrent with any other live loads.
6) * This truss has been designed for a live load of 20.0psf on the bottom chord in all areas where a rectangle 3-6-0 tall by 2-0-0 wide will fit between the bottom chord and any other members, with BCDL = 10.0psf.
7) H10A Simpson Strong-Tie connectors recommended to connect truss to bearing walls due to UPLIFT at jt(s) 17. This connection is for uplift only and does not consider lateral forces.
8) One H2.5A Simpson Strong-Tie connectors recommended to connect truss to bearing walls due to UPLIFT at jt(s) 13 and 2. This connection is for uplift only and does not consider lateral forces.
9) This truss is designed in accordance with the 2018 International Residential Code sections R502.11.1 and R802.10.2 and referenced standard ANSI/TPI 1.
10) Graphical purlin representation does not depict the size or the orientation of the purlin along the top and/or bottom chord.

December 2,2021

WARNING - Verify design parameters and READ NOTES ON THIS AND INCLUDED MITEK REFERENCE PAGE MII-7473 rev. 5/19/2020 BEFORE USE.
Design valid for use only with MiTek® connectors. This design is based only upon parameters shown, and is for an individual building component, not a truss system. Before use, the building designer must verify the applicability of design parameters and properly incorporate this design into the overall building design. Bracing indicated is to prevent buckling of individual truss web and/or chord members only. Additional temporary and permanent bracing is always required for stability and to prevent collapse with possible personal injury and property damage. For general guidance regarding the fabrication, storage, delivery, erection and bracing of trusses and truss systems, see **ANSI/TPI1 Quality Criteria, DSB-89 and BCSI Building Component Safety Information** available from Truss Plate Institute, 2670 Crain Highway, Suite 203 Waldorf, MD 20601

ENGINEERING BY TRENCO A MiTek Affiliate
818 Soundside Road
Edenton, NC 27932

Job	Truss	Truss Type	Qty	Ply	KB Home 149.2115.D
149_2115_D	H5	Hip	1	1	I49048120 Job Reference (optional)

84 Components (Dunn), Dunn, NC - 28334, 8.520 s Aug 27 2021 MiTek Industries, Inc. Wed Dec 1 15:18:25 2021 Page 1
ID:bNZHYySm82JAWDNgfw9uCLzLbIt-nzWe2f2yooOfCjFMmtUGXC83POoQTMFPSUvNQbyDIHS

-0-10-8	4-9-4	9-0-0	17-0-0	25-0-0	33-0-0	41-0-0	45-2-12	50-0-0
0-10-8	4-9-4	4-2-12	8-0-0	8-0-0	8-0-0	8-0-0	4-2-12	4-9-4

Scale = 1:88.3

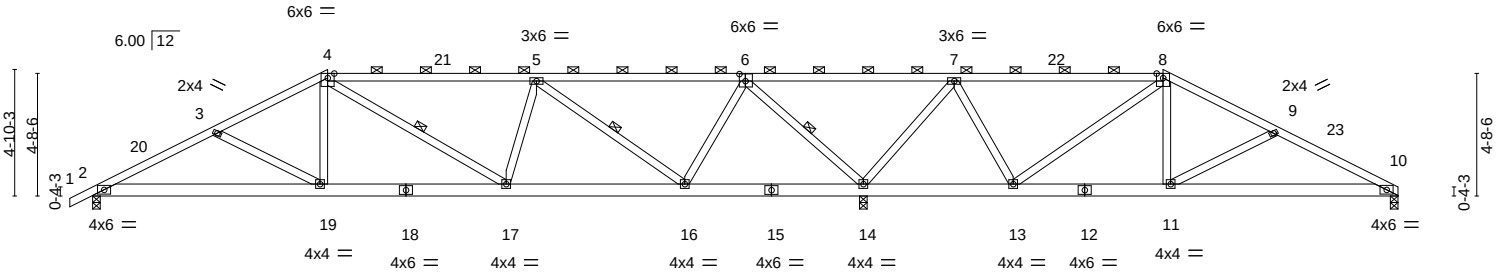

9-0-0	15-10-1	22-8-3	29-6-4	35-3-2	41-0-0	50-0-0
9-0-0	6-10-1	6-10-1	6-10-1	5-8-14	5-8-14	9-0-0

Plate Offsets (X,Y)-- [6:0-2-12,0-3-4]

LOADING (psf)		**SPACING-** 2-0-0	**CSI.**		**DEFL.** in (loc) l/defl L/d	**PLATES**	**GRIP**
TCLL	20.0	Plate Grip DOL 1.15	TC	0.82	Vert(LL) -0.07 17-19 >999 240	MT20	197/144
TCDL	10.0	Lumber DOL 1.15	BC	0.43	Vert(CT) -0.14 2-19 >999 180		
BCLL	0.0 *	Rep Stress Incr YES	WB	0.84	Horz(CT) 0.04 10 n/a n/a		
BCDL	10.0	Code IRC2018/TPI2014	Matrix-S			Weight: 290 lb	FT = 20%

LUMBER-
TOP CHORD 2x4 SP No.2 or 2x4 SPF No.2 *Except* 6-8,4-6: 2x4 SP No.1
BOT CHORD 2x6 SP No.2
WEBS 2x4 SP No.3

BRACING-
TOP CHORD Structural wood sheathing directly applied or 4-1-0 oc purlins, except 2-0-0 oc purlins (4-3-4 max.): 4-8.
BOT CHORD Rigid ceiling directly applied or 10-0-0 oc bracing, Except: 6-0-0 oc bracing: 14-16,13-14.
WEBS 1 Row at midpt 4-17, 5-16, 6-14

REACTIONS. (size) 10=0-3-8, 14=(0-3-8 + H10A Simpson Strong-Tie) (req. 0-3-14), 2=0-3-8
Max Horz 2=85(LC 12)
Max Uplift 10=-77(LC 13), 14=-302(LC 9), 2=-87(LC 12)
Max Grav 10=538(LC 26), 14=2490(LC 1), 2=1045(LC 25)

FORCES. (lb) - Max. Comp./Max. Ten. - All forces 250 (lb) or less except when shown.
TOP CHORD 2-3=-1797/190, 3-4=-1525/164, 4-5=-1317/212, 5-6=-417/94, 6-7=-142/1395, 7-8=-37/281, 8-9=-538/97, 9-10=-820/178
BOT CHORD 2-19=-170/1553, 17-19=-119/1314, 16-17=-194/1280, 13-14=-529/106, 11-13=0/423, 10-11=-110/696
WEBS 3-19=-260/171, 4-19=0/398, 5-17=0/280, 5-16=-1106/182, 6-16=-28/905, 6-14=-1820/308, 7-14=-1380/237, 7-13=0/624, 8-13=-780/75, 8-11=0/401, 9-11=-298/179

NOTES-
1) Unbalanced roof live loads have been considered for this design.
2) Wind: ASCE 7-16; Vult=130mph (3-second gust) Vasd=103mph; TCDL=6.0psf; BCDL=6.0psf; h=25ft; Cat. II; Exp B; Enclosed; MWFRS (envelope) gable end zone and C-C Exterior(2E) -0-10-8 to 2-1-8, Interior(1) 2-1-8 to 9-0-0, Exterior(2R) 9-0-0 to 13-2-15, Interior(1) 13-2-15 to 41-0-0, Exterior(2R) 41-0-0 to 45-4-11, Interior(1) 45-4-11 to 49-10-4 zone;C-C for members and forces & MWFRS for reactions shown; Lumber DOL=1.60 plate grip DOL=1.60
3) Provide adequate drainage to prevent water ponding.
4) This truss has been designed for a 10.0 psf bottom chord live load nonconcurrent with any other live loads.
5) * This truss has been designed for a live load of 20.0psf on the bottom chord in all areas where a rectangle 3-6-0 tall by 2-0-0 wide will fit between the bottom chord and any other members.
6) H10A Simpson Strong-Tie connectors recommended to connect truss to bearing walls due to UPLIFT at jt(s) 14. This connection is for uplift only and does not consider lateral forces.
7) One H2.5A Simpson Strong-Tie connectors recommended to connect truss to bearing walls due to UPLIFT at jt(s) 10 and 2. This connection is for uplift only and does not consider lateral forces.
8) This truss is designed in accordance with the 2018 International Residential Code sections R502.11.1 and R802.10.2 and referenced standard ANSI/TPI 1.
9) Graphical purlin representation does not depict the size or the orientation of the purlin along the top and/or bottom chord.

December 2,2021

WARNING - Verify design parameters and READ NOTES ON THIS AND INCLUDED MITEK REFERENCE PAGE MII-7473 rev. 5/19/2020 BEFORE USE.
Design valid for use only with MiTek® connectors. This design is based only upon parameters shown, and is for an individual building component, not a truss system. Before use, the building designer must verify the applicability of design parameters and properly incorporate this design into the overall building design. Bracing indicated is to prevent buckling of individual truss web and/or chord members only. Additional temporary and permanent bracing is always required for stability and to prevent collapse with possible personal injury and property damage. For general guidance regarding the fabrication, storage, delivery, erection and bracing of trusses and truss systems, see **ANSI/TPI1 Quality Criteria, DSB-89 and BCSI Building Component Safety Information** available from Truss Plate Institute, 2670 Crain Highway, Suite 203 Waldorf, MD 20601

ENGINEERING BY TRENCO A MiTek Affiliate
818 Soundside Road
Edenton, NC 27932

Job	Truss	Truss Type	Qty	Ply	KB Home 149.2115.D
149_2115_D	H6	Hip	1	1	I49048121 Job Reference (optional)

84 Components (Dunn), Dunn, NC - 28334, 8.520 s Aug 27 2021 MiTek Industries, Inc. Wed Dec 1 15:18:26 2021 Page 1
ID:bNZHYySm82JAWDNgfw9uCLzLbIt-F940F_3aZ5WVqtqZJb?V3QhDWn1RCvVYh8fxy2yDIHR

-0-10-8	7-3-10	13-5-13	19-8-0	25-0-0	30-4-0	36-6-3	42-8-5	49-2-0
0-10-8	7-3-10	6-2-3	6-2-3	5-4-0	5-4-0	6-2-3	6-2-3	6-5-11

Scale = 1:86.5

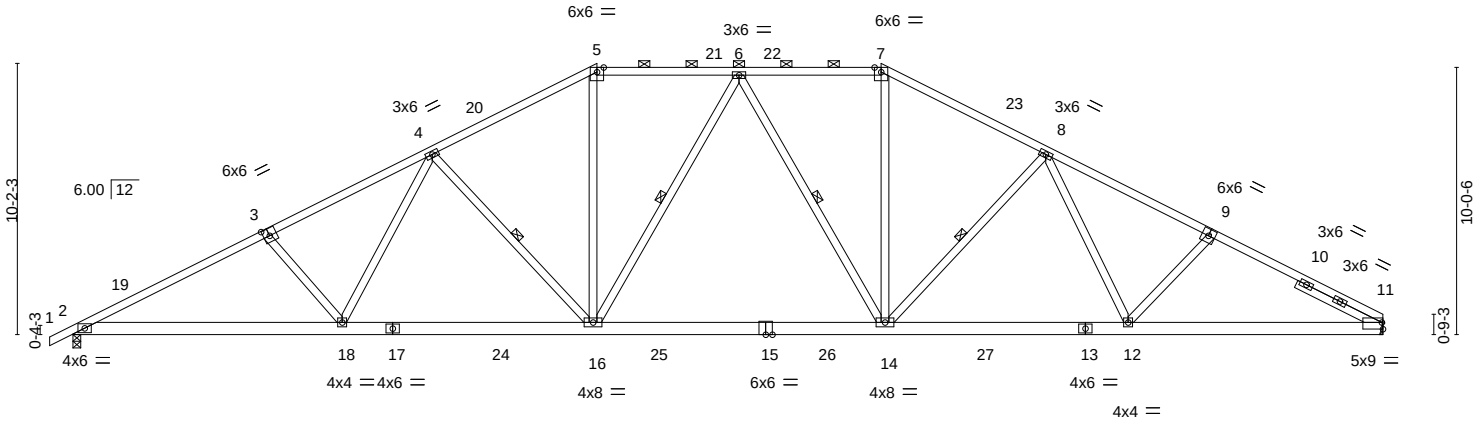

10-1-4	19-8-0	25-0-0	30-4-0	39-7-4	49-2-0
10-1-4	9-6-12	5-4-0	5-4-0	9-3-4	9-6-12

Plate Offsets (X,Y)-- [3:0-2-12,0-3-4], [11:Edge,0-3-0]

LOADING (psf)		**SPACING-** 2-0-0		**CSI.**		**DEFL.**	in	(loc)	l/defl	L/d	**PLATES**	**GRIP**
TCLL	20.0	Plate Grip DOL	1.15	TC	0.86	Vert(LL)	-0.34	14-16	>999	240	MT20	197/144
TCDL	10.0	Lumber DOL	1.15	BC	0.89	Vert(CT)	-0.61	14-16	>963	180		
BCLL	0.0 *	Rep Stress Incr	YES	WB	0.46	Horz(CT)	0.14	11	n/a	n/a		
BCDL	10.0	Code IRC2018/TPI2014		Matrix-S							Weight: 321 lb	FT = 20%

LUMBER-
TOP CHORD 2x4 SP No.2 or 2x4 SPF No.2 *Except*
1-3: 2x4 SP No.1, 9-11: 2x4 SP DSS
BOT CHORD 2x6 SP No.2 *Except*
13-15,2-17: 2x6 SP DSS
WEBS 2x4 SP No.3
SLIDER Right 2x4 SP No.3 3-6-4

BRACING-
TOP CHORD Structural wood sheathing directly applied, except
2-0-0 oc purlins (3-3-1 max.): 5-7.
BOT CHORD Rigid ceiling directly applied or 10-0-0 oc bracing.
WEBS 1 Row at midpt 4-16, 6-16, 6-14, 8-14

REACTIONS. (size) 11=Mechanical, 2=0-3-8
Max Horz 2=169(LC 12)
Max Uplift 11=-148(LC 13), 2=-175(LC 12)
Max Grav 11=2188(LC 2), 2=2237(LC 2)

FORCES. (lb) - Max. Comp./Max. Ten. - All forces 250 (lb) or less except when shown.
TOP CHORD 2-3=-4252/328, 3-4=-4033/334, 4-5=-3129/330, 5-6=-2730/329, 6-7=-2697/324,
7-8=-3096/330, 8-9=-3725/323, 9-11=-3915/321
BOT CHORD 2-18=-341/3729, 16-18=-191/3221, 14-16=-66/2811, 12-14=-130/3113, 11-12=-201/3355
WEBS 3-18=-364/206, 4-18=-55/719, 4-16=-716/237, 5-16=-38/1110, 6-16=-381/153,
6-14=-433/151, 7-14=-39/1104, 8-14=-611/231, 8-12=-34/458

NOTES-
1) Unbalanced roof live loads have been considered for this design.
2) Wind: ASCE 7-16; Vult=130mph (3-second gust) Vasd=103mph; TCDL=6.0psf; BCDL=6.0psf; h=25ft; Cat. II; Exp B; Enclosed; MWFRS (envelope) gable end zone and C-C Exterior(2E) -0-10-8 to 2-1-8, Interior(1) 2-1-8 to 19-8-0, Exterior(2R) 19-8-0 to 23-10-15, Interior(1) 23-10-15 to 30-4-0, Exterior(2R) 30-4-0 to 34-6-15, Interior(1) 34-6-15 to 49-1-4 zone;C-C for members and forces & MWFRS for reactions shown; Lumber DOL=1.60 plate grip DOL=1.60
3) Provide adequate drainage to prevent water ponding.
4) This truss has been designed for a 10.0 psf bottom chord live load nonconcurrent with any other live loads.
5) * This truss has been designed for a live load of 20.0psf on the bottom chord in all areas where a rectangle 3-6-0 tall by 2-0-0 wide will fit between the bottom chord and any other members, with BCDL = 10.0psf.
6) Refer to girder(s) for truss to truss connections.
7) Provide mechanical connection (by others) of truss to bearing plate capable of withstanding 100 lb uplift at joint(s) except (jt=lb) 11=148.
8) One H2.5A Simpson Strong-Tie connectors recommended to connect truss to bearing walls due to UPLIFT at jt(s) 2. This connection is for uplift only and does not consider lateral forces.
9) This truss is designed in accordance with the 2018 International Residential Code sections R502.11.1 and R802.10.2 and referenced standard ANSI/TPI 1.
10) Graphical purlin representation does not depict the size or the orientation of the purlin along the top and/or bottom chord.

December 2,2021

WARNING - Verify design parameters and READ NOTES ON THIS AND INCLUDED MITEK REFERENCE PAGE MII-7473 rev. 5/19/2020 BEFORE USE.
Design valid for use only with MiTek® connectors. This design is based only upon parameters shown, and is for an individual building component, not a truss system. Before use, the building designer must verify the applicability of design parameters and properly incorporate this design into the overall building design. Bracing indicated is to prevent buckling of individual truss web and/or chord members only. Additional temporary and permanent bracing is always required for stability and to prevent collapse with possible personal injury and property damage. For general guidance regarding the fabrication, storage, delivery, erection and bracing of trusses and truss systems, see **ANSI/TPI1 Quality Criteria, DSB-89 and BCSI Building Component Safety Information** available from Truss Plate Institute, 2670 Crain Highway, Suite 203 Waldorf, MD 20601

ENGINEERING BY TRENCO A MiTek Affiliate
818 Soundside Road
Edenton, NC 27932

Job	Truss	Truss Type	Qty	Ply	KB Home 149.2115.D
149_2115_D	H7	Hip	1	1	I49048122 Job Reference (optional)

84 Components (Dunn), Dunn, NC - 28334, 8.520 s Aug 27 2021 MiTek Industries, Inc. Wed Dec 1 15:18:27 2021 Page 1
ID:bNZHYySm82JAWDNgfw9uCLzLbIt-jLeOTK4CKPeMR1PltlWkcdDPEBM4xJOiwoOUUUyDIHQ

-0-10-8	6-0-5	11-6-3	17-0-0	25-0-0	33-0-0	38-3-8	43-7-0	49-2-0
0-10-8	6-0-5	5-5-13	5-5-13	8-0-0	8-0-0	5-3-8	5-3-8	5-7-0

Scale = 1:88.0

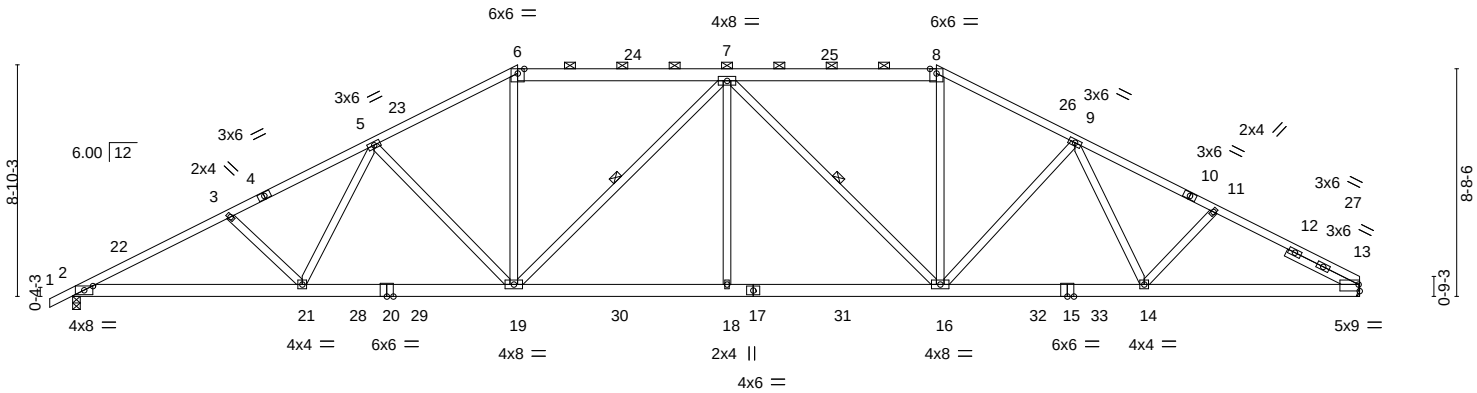

8-9-4	17-0-0	25-0-0	33-0-0	40-11-4	49-2-0
8-9-4	8-2-12	8-0-0	8-0-0	7-11-4	8-2-12

Plate Offsets (X,Y)-- [2:0-4-0,0-1-15], [13:Edge,0-3-0]

LOADING (psf)		SPACING- 2-0-0		CSI.		DEFL.	in	(loc)	l/defl	L/d	PLATES	GRIP
TCLL	20.0	Plate Grip DOL	1.15	TC	0.80	Vert(LL)	-0.30	18-19	>999	240	MT20	197/144
TCDL	10.0	Lumber DOL	1.15	BC	0.93	Vert(CT)	-0.54	18-19	>999	180		
BCLL	0.0 *	Rep Stress Incr	YES	WB	0.67	Horz(CT)	0.17	13	n/a	n/a		
BCDL	10.0	Code IRC2018/TPI2014		Matrix-S							Weight: 333 lb	FT = 20%

LUMBER-
TOP CHORD 2x4 SP No.2 or 2x4 SPF No.2 *Except* 6-8: 2x6 SP No.2, 10-13: 2x4 SP DSS
BOT CHORD 2x6 SP No.2
WEBS 2x4 SP No.3
SLIDER Right 2x4 SP No.3 3-0-4

BRACING-
TOP CHORD Structural wood sheathing directly applied or 2-2-0 oc purlins, except 2-0-0 oc purlins (3-11-10 max.): 6-8.
BOT CHORD Rigid ceiling directly applied or 10-0-0 oc bracing, Except: 2-2-0 oc bracing: 2-21.
WEBS 1 Row at midpt 7-19, 7-16

REACTIONS. (size) 13=Mechanical, 2=0-3-8
Max Horz 2=147(LC 12)
Max Uplift 13=-124(LC 13), 2=-152(LC 12)
Max Grav 13=2181(LC 2), 2=2230(LC 2)

FORCES. (lb) - Max. Comp./Max. Ten. - All forces 250 (lb) or less except when shown.
TOP CHORD 2-3=-4318/330, 3-5=-4109/323, 5-6=-3365/330, 6-7=-2960/327, 7-8=-2896/321, 8-9=-3294/329, 9-11=-3756/314, 11-13=-3901/314
BOT CHORD 2-21=-303/3800, 19-21=-165/3371, 18-19=-127/3374, 16-18=-127/3374, 14-16=-147/3207, 13-14=-204/3334
WEBS 3-21=-314/181, 5-21=-28/577, 5-19=-587/200, 6-19=-28/1166, 7-19=-716/157, 7-18=0/453, 7-16=-798/155, 8-16=-28/1147, 9-16=-466/191, 9-14=-24/332

NOTES-
1) Unbalanced roof live loads have been considered for this design.
2) Wind: ASCE 7-16; Vult=130mph (3-second gust) Vasd=103mph; TCDL=6.0psf; BCDL=6.0psf; h=25ft; Cat. II; Exp B; Enclosed; MWFRS (envelope) gable end zone and C-C Exterior(2E) -0-10-8 to 2-1-8, Interior(1) 2-1-8 to 17-0-0, Exterior(2R) 17-0-0 to 21-2-15, Interior(1) 21-2-15 to 33-0-0, Exterior(2R) 33-0-0 to 37-2-15, Interior(1) 37-2-15 to 49-1-4 zone;C-C for members and forces & MWFRS for reactions shown; Lumber DOL=1.60 plate grip DOL=1.60
3) Provide adequate drainage to prevent water ponding.
4) This truss has been designed for a 10.0 psf bottom chord live load nonconcurrent with any other live loads.
5) * This truss has been designed for a live load of 20.0psf on the bottom chord in all areas where a rectangle 3-6-0 tall by 2-0-0 wide will fit between the bottom chord and any other members, with BCDL = 10.0psf.
6) Refer to girder(s) for truss to truss connections.
7) Provide mechanical connection (by others) of truss to bearing plate capable of withstanding 100 lb uplift at joint(s) except (jt=lb) 13=124.
8) One H2.5A Simpson Strong-Tie connectors recommended to connect truss to bearing walls due to UPLIFT at jt(s) 2. This connection is for uplift only and does not consider lateral forces.
9) This truss is designed in accordance with the 2018 International Residential Code sections R502.11.1 and R802.10.2 and referenced standard ANSI/TPI 1.
10) Graphical purlin representation does not depict the size or the orientation of the purlin along the top and/or bottom chord.

December 2,2021

WARNING - Verify design parameters and READ NOTES ON THIS AND INCLUDED MITEK REFERENCE PAGE MII-7473 rev. 5/19/2020 BEFORE USE.
Design valid for use only with MiTek® connectors. This design is based only upon parameters shown, and is for an individual building component, not a truss system. Before use, the building designer must verify the applicability of design parameters and properly incorporate this design into the overall building design. Bracing indicated is to prevent buckling of individual truss web and/or chord members only. Additional temporary and permanent bracing is always required for stability and to prevent collapse with possible personal injury and property damage. For general guidance regarding the fabrication, storage, delivery, erection and bracing of trusses and truss systems, see **ANSI/TPI1 Quality Criteria, DSB-89 and BCSI Building Component Safety Information** available from Truss Plate Institute, 2670 Crain Highway, Suite 203 Waldorf, MD 20601

ENGINEERING BY TRENCO A MiTek Affiliate
818 Soundside Road
Edenton, NC 27932

Job	Truss	Truss Type	Qty	Ply	KB Home 149.2115.D
149_2115_D	H8	Hip	1	1	I49048123 Job Reference (optional)

84 Components (Dunn), Dunn, NC - 28334, 8.520 s Aug 27 2021 MiTek Industries, Inc. Wed Dec 1 15:18:28 2021 Page 1
ID:bNZHYySm82JAWDNgfw9uCLzLbIt-BYCmgg4r5jmD3B_xR02z8rmYmbjrglXr9R811wyDIHP

-0-10-8	7-5-4	14-4-0	21-5-15	28-6-1	35-8-0	42-6-12	49-2-0
0-10-8	7-5-4	6-10-12	7-1-15	7-0-3	7-1-15	6-10-12	6-7-4

Scale = 1:88.5

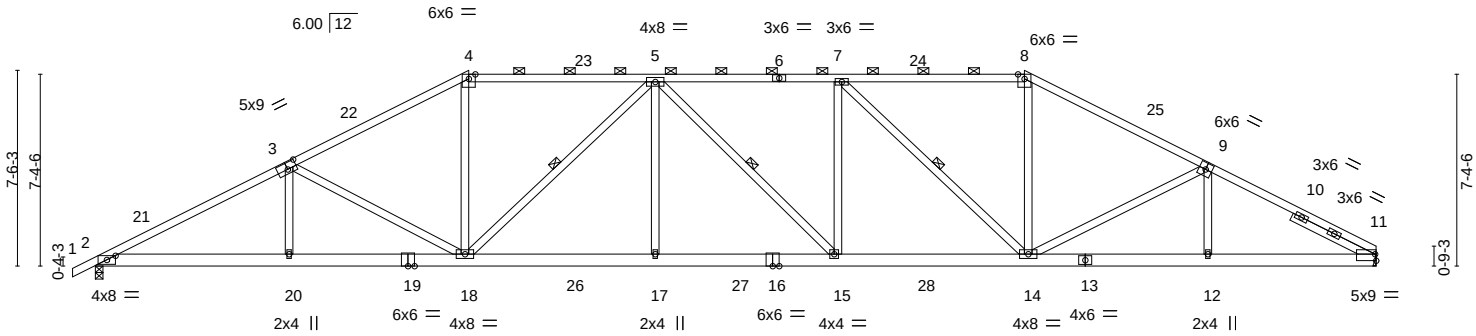

7-5-4	14-4-0	21-5-15	28-6-1	35-8-0	42-6-12	49-2-0
7-5-4	6-10-12	7-1-15	7-0-3	7-1-15	6-10-12	6-7-4

Plate Offsets (X,Y)-- [2:0-4-0,0-1-15], [3:0-4-4,0-3-0], [11:Edge,0-3-0]

LOADING (psf)		**SPACING-** 2-0-0		**CSI.**		**DEFL.**	in	(loc)	l/defl	L/d	**PLATES**	**GRIP**
TCLL	20.0	Plate Grip DOL	1.15	TC	0.94	Vert(LL)	-0.32	15-17	>999	240	MT20	197/144
TCDL	10.0	Lumber DOL	1.15	BC	0.89	Vert(CT)	-0.59	15-17	>999	180		
BCLL	0.0 *	Rep Stress Incr	YES	WB	0.75	Horz(CT)	0.19	11	n/a	n/a		
BCDL	10.0	Code IRC2018/TPI2014		Matrix-S							Weight: 314 lb	FT = 20%

LUMBER-
TOP CHORD 2x4 SP DSS *Except*
4-6,6-8: 2x4 SP No.1, 1-3: 2x4 SP No.2 or 2x4 SPF No.2
BOT CHORD 2x6 SP No.2
WEBS 2x4 SP No.3
SLIDER Right 2x4 SP No.3 3-6-1

BRACING-
TOP CHORD Structural wood sheathing directly applied, except 2-0-0 oc purlins (2-2-0 max.): 4-8.
BOT CHORD Rigid ceiling directly applied or 10-0-0 oc bracing.
WEBS 1 Row at midpt 5-18, 5-15, 7-14

REACTIONS. (size) 11=Mechanical, 2=0-3-8
Max Horz 2=127(LC 12)
Max Uplift 11=-98(LC 13), 2=-127(LC 12)
Max Grav 11=2151(LC 2), 2=2205(LC 2)

FORCES. (lb) - Max. Comp./Max. Ten. - All forces 250 (lb) or less except when shown.
TOP CHORD 2-3=-4262/317, 3-4=-3607/318, 4-5=-3139/322, 5-7=-3798/361, 7-8=-3041/314, 8-9=-3466/315, 9-11=-3899/297
BOT CHORD 2-20=-225/3740, 18-20=-222/3749, 17-18=-267/3846, 15-17=-267/3846, 14-15=-239/3798, 12-14=-189/3343, 11-12=-189/3344
WEBS 3-20=0/294, 3-18=-677/206, 4-18=-11/1256, 5-18=-1072/188, 5-17=0/388, 7-15=0/390, 7-14=-1137/189, 8-14=-7/1168, 9-14=-368/194

NOTES-
1) Unbalanced roof live loads have been considered for this design.
2) Wind: ASCE 7-16; Vult=130mph (3-second gust) Vasd=103mph; TCDL=6.0psf; BCDL=6.0psf; h=25ft; Cat. II; Exp B; Enclosed; MWFRS (envelope) gable end zone and C-C Exterior(2E) -0-10-8 to 2-1-8, Interior(1) 2-1-8 to 14-4-0, Exterior(2R) 14-4-0 to 18-6-15, Interior(1) 18-6-15 to 35-8-0, Exterior(2R) 35-8-0 to 39-10-15, Interior(1) 39-10-15 to 49-1-4 zone;C-C for members and forces & MWFRS for reactions shown; Lumber DOL=1.60 plate grip DOL=1.60
3) Provide adequate drainage to prevent water ponding.
4) This truss has been designed for a 10.0 psf bottom chord live load nonconcurrent with any other live loads.
5) * This truss has been designed for a live load of 20.0psf on the bottom chord in all areas where a rectangle 3-6-0 tall by 2-0-0 wide will fit between the bottom chord and any other members, with BCDL = 10.0psf.
6) Refer to girder(s) for truss to truss connections.
7) Provide mechanical connection (by others) of truss to bearing plate capable of withstanding 100 lb uplift at joint(s) 11.
8) One H2.5A Simpson Strong-Tie connectors recommended to connect truss to bearing walls due to UPLIFT at jt(s) 2. This connection is for uplift only and does not consider lateral forces.
9) This truss is designed in accordance with the 2018 International Residential Code sections R502.11.1 and R802.10.2 and referenced standard ANSI/TPI 1.
10) Graphical purlin representation does not depict the size or the orientation of the purlin along the top and/or bottom chord.

December 2,2021

WARNING - Verify design parameters and READ NOTES ON THIS AND INCLUDED MITEK REFERENCE PAGE MII-7473 rev. 5/19/2020 BEFORE USE.
Design valid for use only with MiTek® connectors. This design is based only upon parameters shown, and is for an individual building component, not a truss system. Before use, the building designer must verify the applicability of design parameters and properly incorporate this design into the overall building design. Bracing indicated is to prevent buckling of individual truss web and/or chord members only. Additional temporary and permanent bracing is always required for stability and to prevent collapse with possible personal injury and property damage. For general guidance regarding the fabrication, storage, delivery, erection and bracing of trusses and truss systems, see **ANSI/TPI1 Quality Criteria, DSB-89 and BCSI Building Component Safety Information** available from Truss Plate Institute, 2670 Crain Highway, Suite 203 Waldorf, MD 20601

ENGINEERING BY TRENCO A MiTek Affiliate
818 Soundside Road
Edenton, NC 27932

Job	Truss	Truss Type	Qty	Ply	KB Home 149.2115.D
149_2115_D	H9	Hip	1	1	I49048124 Job Reference (optional)

84 Components (Dunn), Dunn, NC - 28334, 8.520 s Aug 27 2021 MiTek Industries, Inc. Wed Dec 1 15:18:30 2021 Page 1
ID:bNZHYySm82JAWDNgfw9uCLzLbIt-8wJX5M65dK0xIU8KYR4REGrsTPMp8gU8cld85pyDIHN

-0-10-8	6-1-4	11-8-0	18-4-0	25-0-0	31-8-0	38-4-0	43-7-4	49-2-0
0-10-8	6-1-4	5-6-12	6-8-0	6-8-0	6-8-0	6-8-0	5-3-4	5-6-12

Scale = 1:88.5

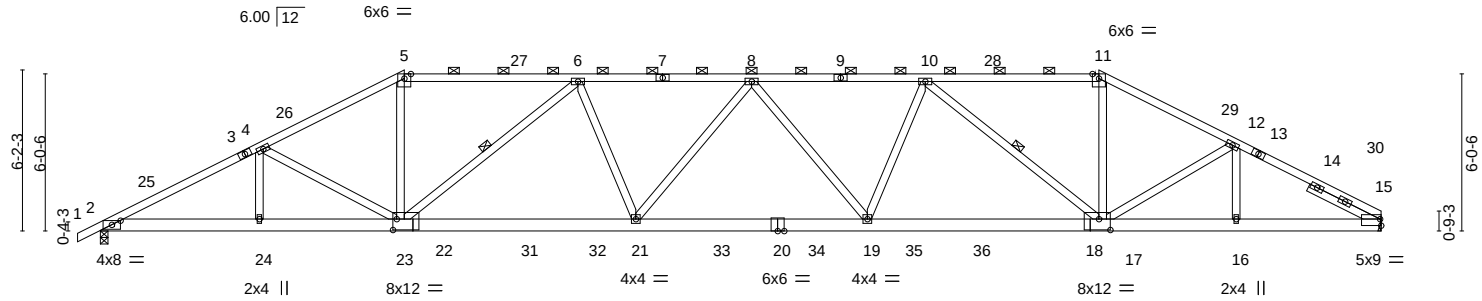

6-1-4	11-8-0	20-6-11	29-5-5	38-4-0	43-7-4	49-2-0
6-1-4	5-6-12	8-10-11	8-10-11	8-10-11	5-3-4	5-6-12

Plate Offsets (X,Y)-- [2:0-4-0,0-1-15], [15:Edge,0-3-0], [18:0-5-4,0-5-0], [23:0-1-12,0-5-0]

LOADING (psf)		**SPACING-** 2-0-0		**CSI.**		**DEFL.**	in	(loc)	l/defl	L/d	**PLATES**	**GRIP**
TCLL	20.0	Plate Grip DOL	1.15	TC	0.99	Vert(LL)	-0.43	19-21	>999	240	MT20	197/144
TCDL	10.0	Lumber DOL	1.15	BC	0.99	Vert(CT)	-0.79	19-21	>746	180		
BCLL	0.0 *	Rep Stress Incr	YES	WB	0.65	Horz(CT)	0.21	15	n/a	n/a		
BCDL	10.0	Code IRC2018/TPI2014		Matrix-S							Weight: 302 lb	FT = 20%

LUMBER-
TOP CHORD 2x4 SP No.2 or 2x4 SPF No.2 *Except* 5-7,9-11: 2x4 SP No.1, 13-15: 2x4 SP DSS
BOT CHORD 2x6 SP No.2
WEBS 2x4 SP No.3
SLIDER Right 2x4 SP No.3 3-0-1

BRACING-
TOP CHORD Structural wood sheathing directly applied, except 2-0-0 oc purlins (2-2-0 max.): 5-11.
BOT CHORD Rigid ceiling directly applied or 2-2-0 oc bracing.
WEBS 1 Row at midpt 6-23, 10-17

REACTIONS. (size) 15=Mechanical, 2=0-3-8
Max Horz 2=106(LC 12)
Max Uplift 15=-135(LC 8), 2=-137(LC 9)
Max Grav 15=2140(LC 2), 2=2190(LC 2)

FORCES. (lb) - Max. Comp./Max. Ten. - All forces 250 (lb) or less except when shown.
TOP CHORD 2-4=-4272/320, 4-5=-3820/361, 5-6=-3342/339, 6-8=-4596/474, 8-10=-4545/466, 10-11=-3195/327, 11-12=-3622/347, 12-15=-3832/296
BOT CHORD 2-24=-304/3756, 23-24=-304/3756, 21-23=-434/4402, 19-21=-460/4698, 17-19=-388/4326, 16-17=-207/3279, 15-16=-207/3279
WEBS 4-23=-459/173, 5-23=-56/1398, 6-23=-1446/264, 6-21=0/573, 8-21=-275/121, 8-19=-343/125, 10-19=0/637, 10-17=-1530/267, 11-17=-49/1289

NOTES-
1) Unbalanced roof live loads have been considered for this design.
2) Wind: ASCE 7-16; Vult=130mph (3-second gust) Vasd=103mph; TCDL=6.0psf; BCDL=6.0psf; h=25ft; Cat. II; Exp B; Enclosed; MWFRS (envelope) gable end zone and C-C Exterior(2E) -0-10-8 to 2-1-8, Interior(1) 2-1-8 to 11-8-0, Exterior(2R) 11-8-0 to 15-10-15, Interior(1) 15-10-15 to 38-4-0, Exterior(2R) 38-4-0 to 42-6-15, Interior(1) 42-6-15 to 49-1-4 zone;C-C for members and forces & MWFRS for reactions shown; Lumber DOL=1.60 plate grip DOL=1.60
3) Provide adequate drainage to prevent water ponding.
4) All plates are 3x6 MT20 unless otherwise indicated.
5) This truss has been designed for a 10.0 psf bottom chord live load nonconcurrent with any other live loads.
6) * This truss has been designed for a live load of 20.0psf on the bottom chord in all areas where a rectangle 3-6-0 tall by 2-0-0 wide will fit between the bottom chord and any other members, with BCDL = 10.0psf.
7) Refer to girder(s) for truss to truss connections.
8) Provide mechanical connection (by others) of truss to bearing plate capable of withstanding 100 lb uplift at joint(s) except (jt=lb) 15=135.
9) One H2.5A Simpson Strong-Tie connectors recommended to connect truss to bearing walls due to UPLIFT at jt(s) 2. This connection is for uplift only and does not consider lateral forces.
10) This truss is designed in accordance with the 2018 International Residential Code sections R502.11.1 and R802.10.2 and referenced standard ANSI/TPI 1.
11) Graphical purlin representation does not depict the size or the orientation of the purlin along the top and/or bottom chord.

December 2,2021

WARNING - Verify design parameters and READ NOTES ON THIS AND INCLUDED MITEK REFERENCE PAGE MII-7473 rev. 5/19/2020 BEFORE USE.
Design valid for use only with MiTek® connectors. This design is based only upon parameters shown, and is for an individual building component, not a truss system. Before use, the building designer must verify the applicability of design parameters and properly incorporate this design into the overall building design. Bracing indicated is to prevent buckling of individual truss web and/or chord members only. Additional temporary and permanent bracing is always required for stability and to prevent collapse with possible personal injury and property damage. For general guidance regarding the fabrication, storage, delivery, erection and bracing of trusses and truss systems, see **ANSI/TPI1 Quality Criteria, DSB-89 and BCSI Building Component Safety Information** available from Truss Plate Institute, 2670 Crain Highway, Suite 203 Waldorf, MD 20601

ENGINEERING BY TRENCO A MiTek Affiliate
818 Soundside Road
Edenton, NC 27932

Job	Truss	Truss Type	Qty	Ply	KB Home 149.2115.D
149_2115_D	H10	Hip	1	1	I49048125 Job Reference (optional)

84 Components (Dunn), Dunn, NC - 28334, 8.520 s Aug 27 2021 MiTek Industries, Inc. Wed Dec 1 15:18:20 2021 Page 1
ID:bNZHYySm82JAWDNgfw9uCLzLbIt-Q?jl?x_p_FlM6yNPzKu5q9RA?N5no4bgJCCckOyDIHX

-0-10-8	4-9-4	9-0-0	17-0-14	25-0-0	32-11-2	41-0-0	44-11-4	49-2-0
0-10-8	4-9-4	4-2-12	8-0-14	7-11-2	7-11-2	8-0-14	3-11-4	4-2-12

Scale = 1:87.1

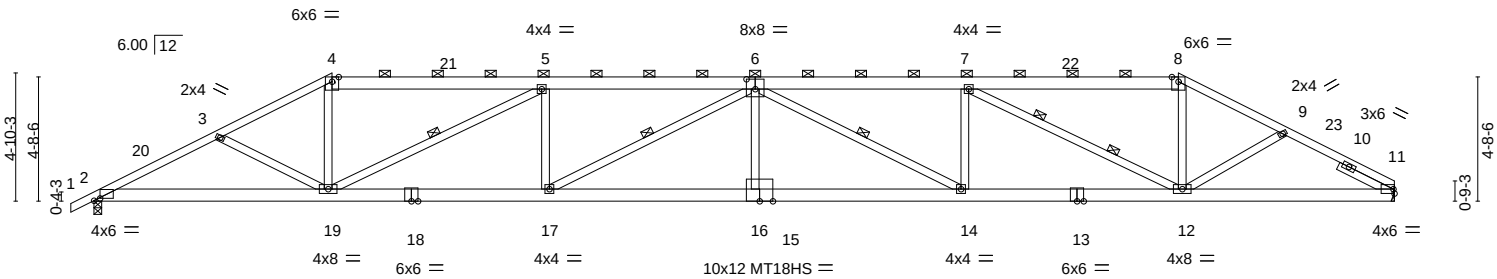

9-0-0	17-0-14	25-0-0	32-11-2	41-0-0	49-2-0
9-0-0	8-0-14	7-11-2	7-11-2	8-0-14	8-2-0

Plate Offsets (X,Y)-- [2:0-2-12,0-1-1], [6:0-4-0,0-4-8]

LOADING (psf)		SPACING- 2-0-0		CSI.		DEFL.	in	(loc)	l/defl	L/d	PLATES	GRIP
TCLL	20.0	Plate Grip DOL	1.15	TC	0.93	Vert(LL)	-0.41	16	>999	240	MT20	197/144
TCDL	10.0	Lumber DOL	1.15	BC	0.39	Vert(CT)	-0.82	16-17	>719	180	MT18HS	244/190
BCLL	0.0 *	Rep Stress Incr	YES	WB	1.00	Horz(CT)	0.17	11	n/a	n/a		
BCDL	10.0	Code IRC2018/TPI2014		Matrix-S							Weight: 317 lb	FT = 20%

LUMBER-
TOP CHORD 2x6 SP No.2 *Except*
1-4: 2x4 SP No.2 or 2x4 SPF No.2, 8-11: 2x4 SP No.1
BOT CHORD 2x6 SP DSS
WEBS 2x4 SP No.3
SLIDER Right 2x4 SP No.3 2-3-1

BRACING-
TOP CHORD Structural wood sheathing directly applied or 1-9-2 oc purlins, except 2-0-0 oc purlins (2-11-2 max.): 4-8.
BOT CHORD Rigid ceiling directly applied or 10-0-0 oc bracing.
WEBS 1 Row at midpt 5-19, 6-17, 6-14
2 Rows at 1/3 pts 7-12

REACTIONS. (size) 11=Mechanical, 2=0-3-8
Max Horz 2=84(LC 12)
Max Uplift 11=-182(LC 8), 2=-182(LC 9)
Max Grav 11=1958(LC 1), 2=2020(LC 1)

FORCES. (lb) - Max. Comp./Max. Ten. - All forces 250 (lb) or less except when shown.
TOP CHORD 2-3=-3944/444, 3-4=-3726/435, 4-5=-3279/404, 5-6=-5190/710, 6-7=-5082/695, 7-8=-3059/385, 8-9=-3437/411, 9-11=-3465/395
BOT CHORD 2-19=-408/3464, 17-19=-667/5190, 16-17=-729/5719, 14-16=-729/5719, 12-14=-619/5082, 11-12=-298/2922
WEBS 4-19=-76/1265, 5-19=-2223/396, 5-17=0/522, 6-17=-664/115, 6-16=0/322, 6-14=-778/124, 7-14=0/576, 7-12=-2337/399, 8-12=-61/1100, 9-12=-50/340

NOTES-
1) Unbalanced roof live loads have been considered for this design.
2) Wind: ASCE 7-16; Vult=130mph (3-second gust) Vasd=103mph; TCDL=6.0psf; BCDL=6.0psf; h=25ft; Cat. II; Exp B; Enclosed; MWFRS (envelope) gable end zone and C-C Exterior(2E) -0-10-8 to 2-1-8, Interior(1) 2-1-8 to 9-0-0, Exterior(2R) 9-0-0 to 13-2-15, Interior(1) 13-2-15 to 41-0-0, Exterior(2R) 41-0-0 to 45-1-1, Interior(1) 45-1-1 to 49-1-4 zone;C-C for members and forces & MWFRS for reactions shown; Lumber DOL=1.60 plate grip DOL=1.60
3) Provide adequate drainage to prevent water ponding.
4) All plates are MT20 plates unless otherwise indicated.
5) This truss has been designed for a 10.0 psf bottom chord live load nonconcurrent with any other live loads.
6) * This truss has been designed for a live load of 20.0psf on the bottom chord in all areas where a rectangle 3-6-0 tall by 2-0-0 wide will fit between the bottom chord and any other members.
7) Refer to girder(s) for truss to truss connections.
8) Provide mechanical connection (by others) of truss to bearing plate capable of withstanding 100 lb uplift at joint(s) except (jt=lb) 11=182.
9) One H2.5A Simpson Strong-Tie connectors recommended to connect truss to bearing walls due to UPLIFT at jt(s) 2. This connection is for uplift only and does not consider lateral forces.
10) This truss is designed in accordance with the 2018 International Residential Code sections R502.11.1 and R802.10.2 and referenced standard ANSI/TPI 1.
11) Graphical purlin representation does not depict the size or the orientation of the purlin along the top and/or bottom chord.

December 2,2021

WARNING - Verify design parameters and READ NOTES ON THIS AND INCLUDED MITEK REFERENCE PAGE MII-7473 rev. 5/19/2020 BEFORE USE.
Design valid for use only with MiTek® connectors. This design is based only upon parameters shown, and is for an individual building component, not a truss system. Before use, the building designer must verify the applicability of design parameters and properly incorporate this design into the overall building design. Bracing indicated is to prevent buckling of individual truss web and/or chord members only. Additional temporary and permanent bracing is always required for stability and to prevent collapse with possible personal injury and property damage. For general guidance regarding the fabrication, storage, delivery, erection and bracing of trusses and truss systems, see **ANSI/TPI1 Quality Criteria, DSB-89 and BCSI Building Component Safety Information** available from Truss Plate Institute, 2670 Crain Highway, Suite 203 Waldorf, MD 20601

ENGINEERING BY TRENCO A MiTek Affiliate
818 Soundside Road
Edenton, NC 27932

Job	Truss	Truss Type	Qty	Ply	KB Home 149.2115.D
149_2115_D	HG1	HALF HIP GIRDER	1	2	I49048126 Job Reference (optional)

84 Components (Dunn), Dunn, NC - 28334, 8.520 s Aug 27 2021 MiTek Industries, Inc. Wed Dec 1 15:18:40 2021 Page 1
ID:bNZHYySm82JAWDNgfw9uCLzLbIt-rswJBnEMGPHWV1uF8XFneMGg_RwZUArcvJ2gSEyDIHD

-0-10-8 | 6-4-0 | 14-0-12 | 21-9-8 | 29-6-4 | 39-7-6 | 50-0-0
0-10-8 | 6-4-0 | 7-8-12 | 7-8-12 | 7-8-12 | 10-1-2 | 10-4-10

Scale = 1:88.1

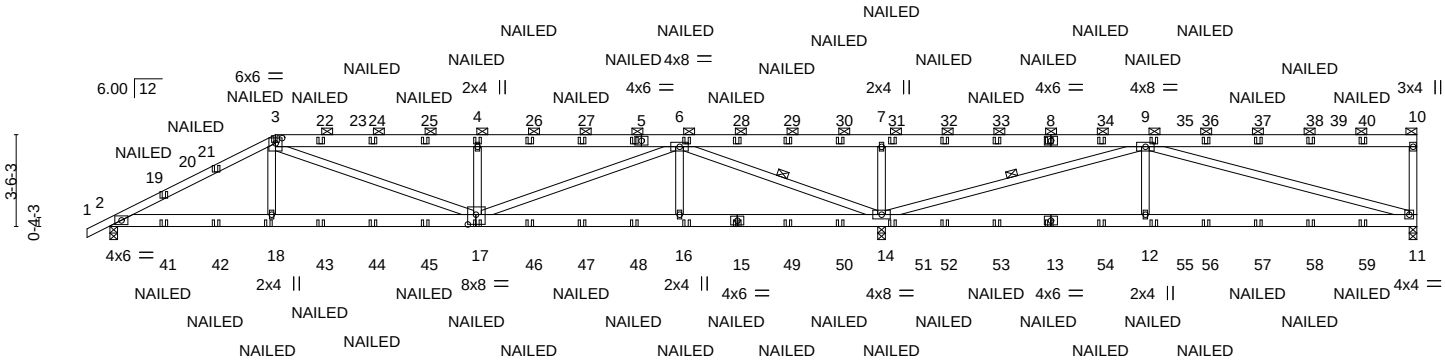

6-4-0 | 14-0-12 | 21-9-8 | 29-6-4 | 39-7-6 | 50-0-0
6-4-0 | 7-8-12 | 7-8-12 | 7-8-12 | 10-1-2 | 10-4-10

Plate Offsets (X,Y)-- [3:0-3-0,0-2-7], [17:0-3-12,0-4-8]

LOADING (psf)		SPACING- 2-0-0		CSI.		DEFL.	in	(loc)	l/defl	L/d	PLATES	GRIP
TCLL	20.0	Plate Grip DOL	1.15	TC	0.60	Vert(LL)	0.11	16-17	>999	240	MT20	197/144
TCDL	10.0	Lumber DOL	1.15	BC	0.39	Vert(CT)	-0.19	16-17	>999	180		
BCLL	0.0 *	Rep Stress Incr	NO	WB	0.72	Horz(CT)	0.05	11	n/a	n/a		
BCDL	10.0	Code IRC2018/TPI2014		Matrix-S							Weight: 640 lb	FT = 20%

LUMBER-
TOP CHORD 2x6 SP No.2 *Except*
1-3: 2x4 SP No.2 or 2x4 SPF No.2
BOT CHORD 2x6 SP No.2
WEBS 2x4 SP No.3

BRACING-
TOP CHORD Structural wood sheathing directly applied or 6-0-0 oc purlins, except end verticals, and 2-0-0 oc purlins (6-0-0 max.): 3-10.
BOT CHORD Rigid ceiling directly applied or 10-0-0 oc bracing.
WEBS 1 Row at midpt 6-14, 9-14

REACTIONS. (size) 11=0-3-8, 2=0-3-8, 14=0-3-8
Max Horz 2=128(LC 37)
Max Uplift 11=-279(LC 8), 2=-338(LC 9), 14=-1158(LC 9)
Max Grav 11=886(LC 26), 2=1582(LC 1), 14=3623(LC 1)

FORCES. (lb) - Max. Comp./Max. Ten. - All forces 250 (lb) or less except when shown.
TOP CHORD 2-3=-2873/712, 3-4=-3388/1044, 4-6=-3402/1053, 6-7=-593/1899, 7-9=-593/1899, 10-11=-402/231
BOT CHORD 2-18=-660/2471, 17-18=-666/2457, 16-17=-562/1775, 14-16=-562/1775, 12-14=-420/1248, 11-12=-420/1248
WEBS 3-18=0/477, 3-17=-432/1057, 4-17=-775/503, 6-17=-528/1748, 6-16=0/434, 6-14=-3951/1241, 7-14=-868/535, 9-14=-3278/1053, 9-12=0/677, 9-11=-1183/399

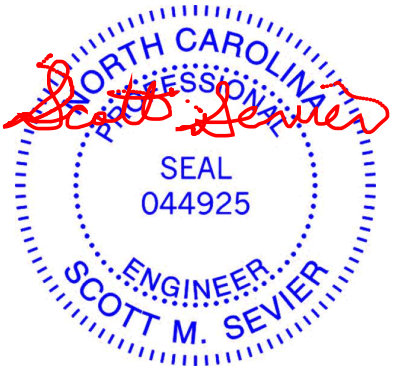

NOTES-
1) 2-ply truss to be connected together with 10d (0.131"x3") nails as follows:
Top chords connected as follows: 2x4 - 1 row at 0-9-0 oc, 2x6 - 2 rows staggered at 0-9-0 oc.
Bottom chords connected as follows: 2x6 - 2 rows staggered at 0-9-0 oc.
Webs connected as follows: 2x4 - 1 row at 0-9-0 oc.
2) All loads are considered equally applied to all plies, except if noted as front (F) or back (B) face in the LOAD CASE(S) section. Ply to ply connections have been provided to distribute only loads noted as (F) or (B), unless otherwise indicated.
3) Unbalanced roof live loads have been considered for this design.
4) Wind: ASCE 7-16; Vult=130mph (3-second gust) Vasd=103mph; TCDL=6.0psf; BCDL=6.0psf; h=25ft; Cat. II; Exp B; Enclosed; MWFRS (envelope) gable end zone and C-C Exterior(2E) -0-10-8 to 2-1-8, Interior(1) 2-1-8 to 6-4-0, Exterior(2R) 6-4-0 to 9-4-0, Interior(1) 9-4-0 to 49-10-4 zone;C-C for members and forces & MWFRS for reactions shown; Lumber DOL=1.60 plate grip DOL=1.60
5) Provide adequate drainage to prevent water ponding.
6) This truss has been designed for a 10.0 psf bottom chord live load nonconcurrent with any other live loads.
7) * This truss has been designed for a live load of 20.0psf on the bottom chord in all areas where a rectangle 3-6-0 tall by 2-0-0 wide will fit between the bottom chord and any other members.
8) One H2.5A Simpson Strong-Tie connectors recommended to connect truss to bearing walls due to UPLIFT at jt(s) 11 and 2. This connection is for uplift only and does not consider lateral forces.
9) H10A-2 Simpson Strong-Tie connectors recommended to connect truss to bearing walls due to UPLIFT at jt(s) 14. This connection is for uplift only and does not consider lateral forces.
10) This truss is designed in accordance with the 2018 International Residential Code sections R502.11.1 and R802.10.2 and referenced standard ANSI/TPI 1.
11) Graphic representation does not depict the size or the orientation of the purlin along the top and/or bottom chord.

December 2,2021

Continued on page 2

WARNING - Verify design parameters and READ NOTES ON THIS AND INCLUDED MITEK REFERENCE PAGE MII-7473 rev. 5/19/2020 BEFORE USE.
Design valid for use only with MiTek® connectors. This design is based only upon parameters shown, and is for an individual building component, not a truss system. Before use, the building designer must verify the applicability of design parameters and properly incorporate this design into the overall building design. Bracing indicated is to prevent buckling of individual truss web and/or chord members only. Additional temporary and permanent bracing is always required for stability and to prevent collapse with possible personal injury and property damage. For general guidance regarding the fabrication, storage, delivery, erection and bracing of trusses and truss systems, see **ANSI/TPI1 Quality Criteria, DSB-89 and BCSI Building Component Safety Information** available from Truss Plate Institute, 2670 Crain Highway, Suite 203 Waldorf, MD 20601

ENGINEERING BY TRENCO A MiTek Affiliate
818 Soundside Road
Edenton, NC 27932

NOTES-

12) "NAILED" indicates 3-10d (0.148"x3") or 3-12d (0.148"x3.25") toe-nails per NDS guidlines.

LOAD CASE(S) Standard

1) Dead + Roof Live (balanced): Lumber Increase=1.15, Plate Increase=1.15
   Uniform Loads (plf)
   Vert: 1-3=-60, 3-10=-60, 2-11=-20
   Concentrated Loads (lb)
   Vert: 3=-52(F) 5=-61(F) 10=-23 18=-32(F) 17=-23(F) 4=-61(F) 6=-61(F) 16=-23(F) 8=-61(F) 13=-23(F) 15=-23(F) 19=-54(F) 21=-53(F) 22=-61(F) 24=-61(F) 25=-61(F) 26=-61(F) 27=-61(F) 28=-61(F) 29=-61(F) 30=-61(F) 31=-61(F) 32=-61(F) 33=-61(F) 34=-61(F) 35=-61(F) 36=-61(F) 37=-61(F) 38=-61(F) 40=-61(F) 41=-31(F) 42=-32(F) 43=-23(F) 44=-23(F) 45=-23(F) 46=-23(F) 47=-23(F) 48=-23(F) 49=-23(F) 50=-23(F) 51=-23(F) 52=-23(F) 53=-23(F) 54=-23(F) 55=-23(F) 56=-23(F) 57=-23(F) 58=-23(F) 59=-23(F)

WARNING - Verify design parameters and READ NOTES ON THIS AND INCLUDED MITEK REFERENCE PAGE MII-7473 rev. 5/19/2020 BEFORE USE.
Design valid for use only with MiTek® connectors. This design is based only upon parameters shown, and is for an individual building component, not a truss system. Before use, the building designer must verify the applicability of design parameters and properly incorporate this design into the overall building design. Bracing indicated is to prevent buckling of individual truss web and/or chord members only. Additional temporary and permanent bracing is always required for stability and to prevent collapse with possible personal injury and property damage. For general guidance regarding the fabrication, storage, delivery, erection and bracing of trusses and truss systems, see **ANSI/TPI1 Quality Criteria, DSB-89 and BCSI Building Component Safety Information** available from Truss Plate Institute, 2670 Crain Highway, Suite 203 Waldorf, MD 20601

ENGINEERING BY TRENCO A MiTek Affiliate
818 Soundside Road
Edenton, NC 27932

Job	Truss	Truss Type	Qty	Ply	KB Home 149.2115.D
149_2115_D	HG2	Half Hip Girder	1	1	I49048127 Job Reference (optional)

84 Components (Dunn), Dunn, NC - 28334, 8.520 s Aug 27 2021 MiTek Industries, Inc. Wed Dec 1 15:18:44 2021 Page 1
ID:bNZHYySm82JAWDNgfw9uCLzLbIt-jd9q18HtKdny_eC0NNKjoCQHR2CrQwrCqx0ub?yDIH9

-0-10-8	3-10-2	6-4-0	11-9-9	17-1-6	22-5-3	27-9-0	33-0-13	38-4-10	43-8-7	49-2-0
0-10-8	3-10-2	2-5-14	5-5-9	5-3-13	5-3-13	5-3-13	5-3-13	5-3-13	5-3-13	5-5-9

Scale = 1:88.5

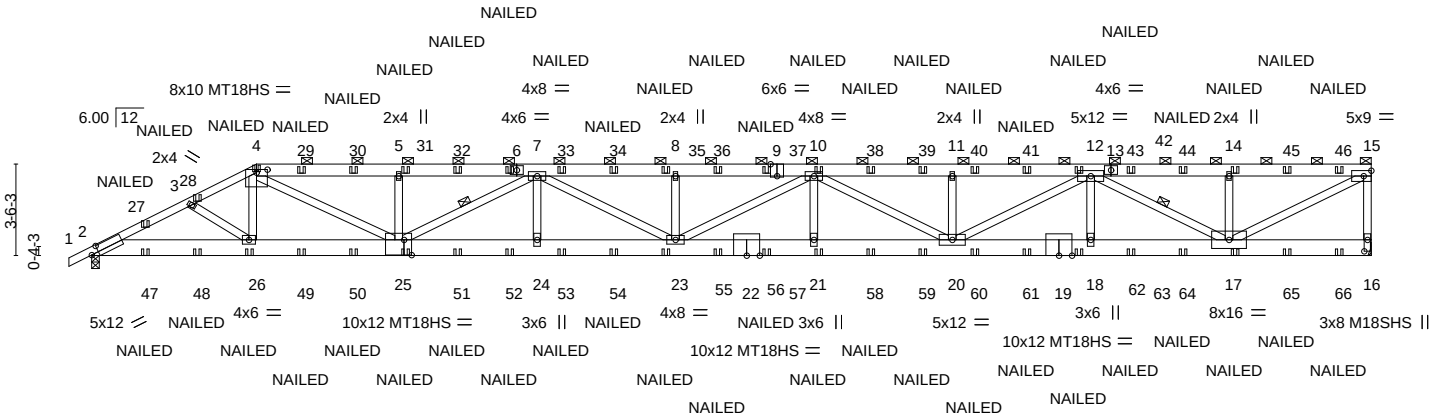

6-4-0	11-9-9	17-1-6	22-5-3	27-9-0	33-0-13	38-4-10	43-8-7	49-2-0
6-4-0	5-5-9	5-3-13	5-3-13	5-3-13	5-3-13	5-3-13	5-3-13	5-5-9

Plate Offsets (X,Y)-- [2:0-3-7,0-3-0], [4:0-5-0,0-1-7], [9:0-3-0,Edge], [16:0-5-4,0-1-8], [25:0-3-8,0-7-0]

LOADING (psf)		**SPACING-** 2-0-0		**CSI.**		**DEFL.**	in	(loc)	l/defl	L/d	**PLATES**	**GRIP**
TCLL	20.0	Plate Grip DOL	1.15	TC	0.96	Vert(LL)	1.04	21-23	>565	240	MT20	197/144
TCDL	10.0	Lumber DOL	1.15	BC	0.75	Vert(CT)	-1.67	21-23	>350	180	M18SHS	244/190
BCLL	0.0 *	Rep Stress Incr	NO	WB	0.98	Horz(CT)	0.23	16	n/a	n/a	MT18HS	197/144
BCDL	10.0	Code IRC2018/TPI2014		Matrix-S							Weight: 368 lb	FT = 20%

LUMBER-
TOP CHORD 2x6 SP DSS *Except*
1-4: 2x4 SP No.2 or 2x4 SPF No.2
BOT CHORD 2x8 SP DSS
WEBS 2x4 SP No.3 *Except*
4-25: 2x4 SP No.2 or 2x4 SPF No.2
7-25,7-23,10-23,10-20,12-20,12-17,15-17: 2x4 SP No.1

BRACING-
TOP CHORD Structural wood sheathing directly applied or 1-5-12 oc purlins, except end verticals, and 2-0-0 oc purlins (2-0-11 max.): 4-15.
BOT CHORD Rigid ceiling directly applied or 5-0-6 oc bracing.
WEBS 1 Row at midpt 7-25, 12-17

REACTIONS. (size) 16=Mechanical, 2=(0-3-8 + H10A Simpson Strong-Tie) (req. 0-4-12)
Max Horz 2=127(LC 12)
Max Uplift 16=-960(LC 9), 2=-796(LC 9)
Max Grav 16=2984(LC 1), 2=3014(LC 1)

FORCES. (lb) - Max. Comp./Max. Ten. - All forces 250 (lb) or less except when shown.
TOP CHORD 2-3=-6209/1792, 3-4=-5996/1755, 4-5=-8827/2764, 5-7=-8826/2763, 7-8=-12054/3846, 8-10=-12054/3846, 10-11=-10687/3429, 11-12=-10687/3429, 12-14=-4746/1527, 14-15=-4746/1527, 15-16=-2855/978
BOT CHORD 2-26=-1644/5513, 25-26=-1596/5347, 24-25=-3518/11091, 23-24=-3518/11091, 21-23=-3859/12030, 20-21=-3859/12030, 18-20=-2693/8356, 17-18=-2693/8356
WEBS 4-26=0/421, 4-25=-1341/3987, 5-25=-529/343, 7-25=-2611/873, 7-24=0/364, 7-23=-383/1120, 8-23=-450/305, 10-21=0/369, 10-20=-1540/493, 11-20=-446/297, 12-20=-844/2672, 12-18=0/361, 12-17=-4140/1337, 14-17=-498/334, 15-17=-1728/5380

NOTES-
1) Unbalanced roof live loads have been considered for this design.
2) Wind: ASCE 7-16; Vult=130mph (3-second gust) Vasd=103mph; TCDL=6.0psf; BCDL=6.0psf; h=25ft; Cat. II; Exp B; Enclosed; MWFRS (envelope) gable end zone and C-C Exterior(2E) -0-10-8 to 2-1-8, Interior(1) 2-1-8 to 6-4-0, Exterior(2R) 6-4-0 to 10-6-15, Interior(1) 10-6-15 to 49-0-4 zone;C-C for members and forces & MWFRS for reactions shown; Lumber DOL=1.60 plate grip DOL=1.60
3) Provide adequate drainage to prevent water ponding.
4) All plates are MT20 plates unless otherwise indicated.
5) The Fabrication Tolerance at joint 25 = 16%
6) This truss has been designed for a 10.0 psf bottom chord live load nonconcurrent with any other live loads.
7) * This truss has been designed for a live load of 20.0psf on the bottom chord in all areas where a rectangle 3-6-0 tall by 2-0-0 wide will fit between the bottom chord and any other members.
8) Refer to girder(s) for truss to truss connections.
9) Provide mechanical connection (by others) of truss to bearing plate capable of withstanding 100 lb uplift at joint(s) except (jt=lb) 16=960.
10) H10A Simpson Strong-Tie connectors recommended to connect truss to bearing walls due to UPLIFT at jt(s) 2. This connection is for uplift only and does not consider lateral forces.
11) This truss is designed in accordance with the 2018 International Residential Code sections R502.11.1 and R802.10.2 and referenced standard ANSI/TPI 1.

Continued on page 2

December 2,2021

WARNING - Verify design parameters and READ NOTES ON THIS AND INCLUDED MITEK REFERENCE PAGE MII-7473 rev. 5/19/2020 BEFORE USE.
Design valid for use only with MiTek® connectors. This design is based only upon parameters shown, and is for an individual building component, not a truss system. Before use, the building designer must verify the applicability of design parameters and properly incorporate this design into the overall building design. Bracing indicated is to prevent buckling of individual truss web and/or chord members only. Additional temporary and permanent bracing is always required for stability and to prevent collapse with possible personal injury and property damage. For general guidance regarding the fabrication, storage, delivery, erection and bracing of trusses and truss systems, see **ANSI/TPI1 Quality Criteria, DSB-89 and BCSI Building Component Safety Information** available from Truss Plate Institute, 2670 Crain Highway, Suite 203 Waldorf, MD 20601

ENGINEERING BY TRENCO A MiTek Affiliate
818 Soundside Road
Edenton, NC 27932

NOTES-

12) Graphical purlin representation does not depict the size or the orientation of the purlin along the top and/or bottom chord.
13) "NAILED" indicates 3-10d (0.148"x3") or 3-12d (0.148"x3.25") toe-nails per NDS guidlines.
14) In the LOAD CASE(S) section, loads applied to the face of the truss are noted as front (F) or back (B).

LOAD CASE(S) Standard

1) Dead + Roof Live (balanced): Lumber Increase=1.15, Plate Increase=1.15
   Uniform Loads (plf)
   Vert: 1-4=-60, 4-15=-60, 2-16=-20
   Concentrated Loads (lb)
   Vert: 4=-52(B) 6=-61(B) 26=-32(B) 5=-61(B) 25=-23(B) 21=-23(B) 10=-61(B) 14=-61(B) 17=-23(B) 27=-54(B) 28=-53(B) 29=-61(B) 30=-61(B) 32=-61(B) 33=-61(B) 34=-61(B) 35=-61(B) 36=-61(B) 37=-61(B) 38=-61(B) 39=-61(B) 40=-61(B) 41=-61(B) 42=-61(B) 43=-61(B) 44=-61(B) 45=-61(B) 46=-61(B) 47=-31(B) 48=-32(B) 49=-23(B) 50=-23(B) 51=-23(B) 52=-23(B) 53=-23(B) 54=-23(B) 55=-23(B) 56=-23(B) 57=-23(B) 58=-23(B) 59=-23(B) 60=-23(B) 61=-23(B) 62=-23(B) 63=-23(B) 64=-23(B) 65=-23(B) 66=-23(B)

WARNING - Verify design parameters and READ NOTES ON THIS AND INCLUDED MITEK REFERENCE PAGE MII-7473 rev. 5/19/2020 BEFORE USE.
Design valid for use only with MiTek® connectors. This design is based only upon parameters shown, and is for an individual building component, not a truss system. Before use, the building designer must verify the applicability of design parameters and properly incorporate this design into the overall building design. Bracing indicated is to prevent buckling of individual truss web and/or chord members only. Additional temporary and permanent bracing is always required for stability and to prevent collapse with possible personal injury and property damage. For general guidance regarding the fabrication, storage, delivery, erection and bracing of trusses and truss systems, see **ANSI/TPI1 Quality Criteria, DSB-89 and BCSI Building Component Safety Information** available from Truss Plate Institute, 2670 Crain Highway, Suite 203 Waldorf, MD 20601

ENGINEERING BY TRENCO A MiTek Affiliate
818 Soundside Road
Edenton, NC 27932

Job	Truss	Truss Type	Qty	Ply	KB Home 149.2115.D
149_2115_D	J1	Jack-Open	42	1	I49048128 Job Reference (optional)

84 Components (Dunn), Dunn, NC - 28334, 8.520 s Aug 27 2021 MiTek Industries, Inc. Wed Dec 1 15:18:45 2021 Page 1
ID:bNZHYySm82JAWDNgfw9uCLzLbIt-BpjCEUIV5xvpconCw4ryLQzb8SgI9cNL3blR7RyDIH8

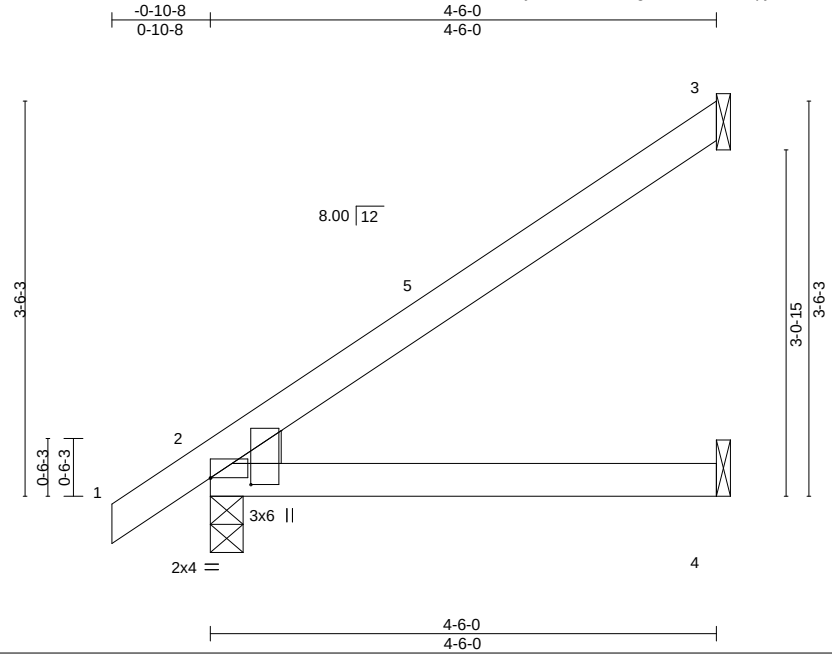

Plate Offsets (X,Y)-- [2:0-0-0,0-0-0], [2:0-0-11,0-4-5]

LOADING (psf)		SPACING- 2-0-0		CSI.		DEFL. in (loc) l/defl L/d					PLATES	GRIP
TCLL	20.0	Plate Grip DOL	1.15	TC	0.32	Vert(LL)	-0.02	2-4	>999	240	MT20	197/144
TCDL	10.0	Lumber DOL	1.15	BC	0.22	Vert(CT)	-0.04	2-4	>999	180		
BCLL	0.0 *	Rep Stress Incr	YES	WB	0.00	Horz(CT)	-0.00	3	n/a	n/a		
BCDL	10.0	Code IRC2018/TPI2014		Matrix-P							Weight: 17 lb	FT = 20%

LUMBER-
TOP CHORD 2x4 SP No.2 or 2x4 SPF No.2
BOT CHORD 2x4 SP No.2 or 2x4 SPF No.2
WEDGE
Left: 2x4 SP No.3

BRACING-
TOP CHORD Structural wood sheathing directly applied or 4-6-0 oc purlins.
BOT CHORD Rigid ceiling directly applied or 10-0-0 oc bracing.

REACTIONS. (size) 3=Mechanical, 2=0-3-8, 4=Mechanical
Max Horz 2=128(LC 12)
Max Uplift 3=-92(LC 12), 2=-8(LC 12)
Max Grav 3=133(LC 19), 2=240(LC 1), 4=86(LC 3)

FORCES. (lb) - Max. Comp./Max. Ten. - All forces 250 (lb) or less except when shown.

NOTES-
1) Wind: ASCE 7-16; Vult=130mph (3-second gust) Vasd=103mph; TCDL=6.0psf; BCDL=6.0psf; h=25ft; Cat. II; Exp B; Enclosed; MWFRS (envelope) gable end zone and C-C Exterior(2E) -0-10-8 to 2-1-8, Interior(1) 2-1-8 to 4-5-4 zone;C-C for members and forces & MWFRS for reactions shown; Lumber DOL=1.60 plate grip DOL=1.60
2) This truss has been designed for a 10.0 psf bottom chord live load nonconcurrent with any other live loads.
3) * This truss has been designed for a live load of 20.0psf on the bottom chord in all areas where a rectangle 3-6-0 tall by 2-0-0 wide will fit between the bottom chord and any other members.
4) Refer to girder(s) for truss to truss connections.
5) Provide mechanical connection (by others) of truss to bearing plate capable of withstanding 100 lb uplift at joint(s) 3.
6) One H2.5A Simpson Strong-Tie connectors recommended to connect truss to bearing walls due to UPLIFT at jt(s) 2. This connection is for uplift only and does not consider lateral forces.
7) This truss is designed in accordance with the 2018 International Residential Code sections R502.11.1 and R802.10.2 and referenced standard ANSI/TPI 1.

December 2,2021

WARNING - Verify design parameters and READ NOTES ON THIS AND INCLUDED MITEK REFERENCE PAGE MII-7473 rev. 5/19/2020 BEFORE USE.
Design valid for use only with MiTek® connectors. This design is based only upon parameters shown, and is for an individual building component, not a truss system. Before use, the building designer must verify the applicability of design parameters and properly incorporate this design into the overall building design. Bracing indicated is to prevent buckling of individual truss web and/or chord members only. Additional temporary and permanent bracing is always required for stability and to prevent collapse with possible personal injury and property damage. For general guidance regarding the fabrication, storage, delivery, erection and bracing of trusses and truss systems, see **ANSI/TPI1 Quality Criteria, DSB-89 and BCSI Building Component Safety Information** available from Truss Plate Institute, 2670 Crain Highway, Suite 203 Waldorf, MD 20601

ENGINEERING BY TRENCO A MiTek Affiliate
818 Soundside Road
Edenton, NC 27932

Job	Truss	Truss Type	Qty	Ply	KB Home 149.2115.D
149_2115_D	J2	Jack-Open	2	1	I49048129 Job Reference (optional)

84 Components (Dunn), Dunn, NC - 28334, 8.520 s Aug 27 2021 MiTek Industries, Inc. Wed Dec 1 15:18:46 2021 Page 1
ID:bNZHYySm82JAWDNgfw9uCLzLbIt-g?HaSqI7sE1gDyMPUoMBtdWmer0wu3dVIFV_ftyDIH7

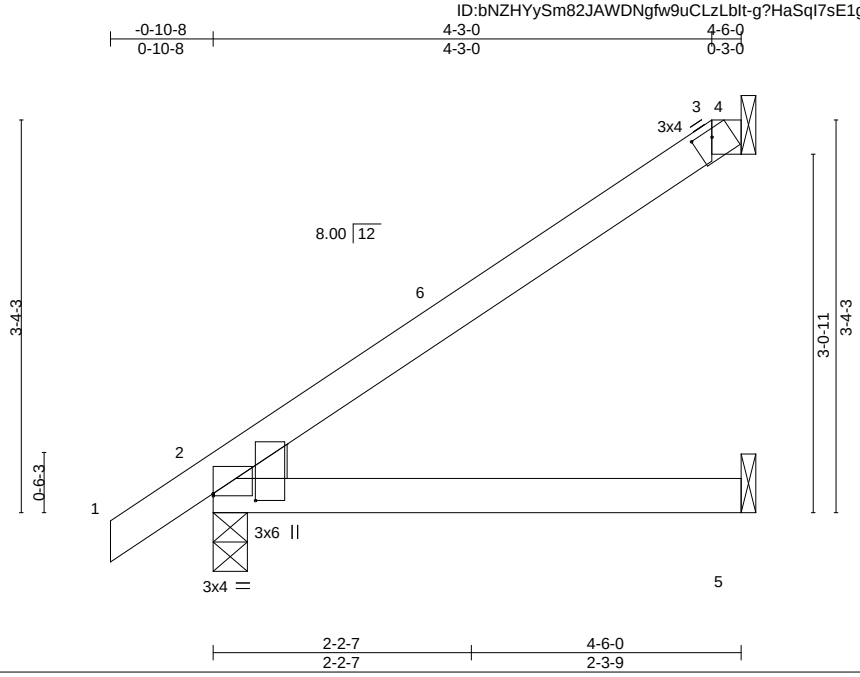

Plate Offsets (X,Y)-- [2:0-0-11,0-4-5], [2:0-0-0,0-0-4], [3:0-2-0,0-0-12]

LOADING (psf)		SPACING-	2-0-0	CSI.		DEFL.	in	(loc)	l/defl	L/d	PLATES	GRIP
TCLL	20.0	Plate Grip DOL	1.15	TC	0.27	Vert(LL)	0.02	2-5	>999	240	MT20	197/144
TCDL	10.0	Lumber DOL	1.15	BC	0.20	Vert(CT)	-0.04	2-5	>999	180		
BCLL	0.0 *	Rep Stress Incr	YES	WB	0.00	Horz(CT)	-0.01	4	n/a	n/a		
BCDL	10.0	Code IRC2018/TPI2014		Matrix-P							Weight: 17 lb	FT = 20%

LUMBER-
TOP CHORD 2x4 SP No.2 or 2x4 SPF No.2
BOT CHORD 2x4 SP No.2 or 2x4 SPF No.2
WEDGE
Left: 2x4 SP No.3

BRACING-
TOP CHORD Structural wood sheathing directly applied or 4-6-0 oc purlins, except 2-0-0 oc purlins: 3-4.
BOT CHORD Rigid ceiling directly applied or 10-0-0 oc bracing.

REACTIONS. (size) 4=Mechanical, 2=0-3-8, 5=Mechanical
Max Horz 2=124(LC 12)
Max Uplift 4=-72(LC 12), 2=-10(LC 12)
Max Grav 4=116(LC 19), 2=240(LC 1), 5=81(LC 3)

FORCES. (lb) - Max. Comp./Max. Ten. - All forces 250 (lb) or less except when shown.

NOTES-
1) Unbalanced roof live loads have been considered for this design.
2) Wind: ASCE 7-16; Vult=130mph (3-second gust) Vasd=103mph; TCDL=6.0psf; BCDL=6.0psf; h=25ft; Cat. II; Exp B; Enclosed; MWFRS (envelope) gable end zone and C-C Exterior(2E) -0-10-8 to 2-1-8, Interior(1) 2-1-8 to 4-3-0, Exterior(2E) 4-3-0 to 4-5-4 zone;C-C for members and forces & MWFRS for reactions shown; Lumber DOL=1.60 plate grip DOL=1.60
3) Provide adequate drainage to prevent water ponding.
4) This truss has been designed for a 10.0 psf bottom chord live load nonconcurrent with any other live loads.
5) * This truss has been designed for a live load of 20.0psf on the bottom chord in all areas where a rectangle 3-6-0 tall by 2-0-0 wide will fit between the bottom chord and any other members.
6) Refer to girder(s) for truss to truss connections.
7) Provide mechanical connection (by others) of truss to bearing plate capable of withstanding 100 lb uplift at joint(s) 4.
8) One MTS12 Simpson Strong-Tie connectors recommended to connect truss to bearing walls due to UPLIFT at jt(s) 5. This connection is for uplift only and does not consider lateral forces.
9) One H2.5A Simpson Strong-Tie connectors recommended to connect truss to bearing walls due to UPLIFT at jt(s) 2. This connection is for uplift only and does not consider lateral forces.
10) This truss is designed in accordance with the 2018 International Residential Code sections R502.11.1 and R802.10.2 and referenced standard ANSI/TPI 1.
11) Graphical purlin representation does not depict the size or the orientation of the purlin along the top and/or bottom chord.

December 2,2021

WARNING - Verify design parameters and READ NOTES ON THIS AND INCLUDED MITEK REFERENCE PAGE MII-7473 rev. 5/19/2020 BEFORE USE.
Design valid for use only with MiTek® connectors. This design is based only upon parameters shown, and is for an individual building component, not a truss system. Before use, the building designer must verify the applicability of design parameters and properly incorporate this design into the overall building design. Bracing indicated is to prevent buckling of individual truss web and/or chord members only. Additional temporary and permanent bracing is always required for stability and to prevent collapse with possible personal injury and property damage. For general guidance regarding the fabrication, storage, delivery, erection and bracing of trusses and truss systems, see **ANSI/TPI1 Quality Criteria, DSB-89 and BCSI Building Component Safety Information** available from Truss Plate Institute, 2670 Crain Highway, Suite 203 Waldorf, MD 20601

ENGINEERING BY TRENCO A MiTek Affiliate
818 Soundside Road
Edenton, NC 27932

Job	Truss	Truss Type	Qty	Ply	KB Home 149.2115.D
149_2115_D	J3	Jack-Open	2	1	I49048130 Job Reference (optional)

84 Components (Dunn), Dunn, NC - 28334, 8.520 s Aug 27 2021 MiTek Industries, Inc. Wed Dec 1 15:18:48 2021 Page 1
ID:bNZHYySm82JAWDNgfw9uCLzLbIt-cOPKtWKNOsHOTFWncCOfy2b6OfiOMz7olZ_5kmyDIH5

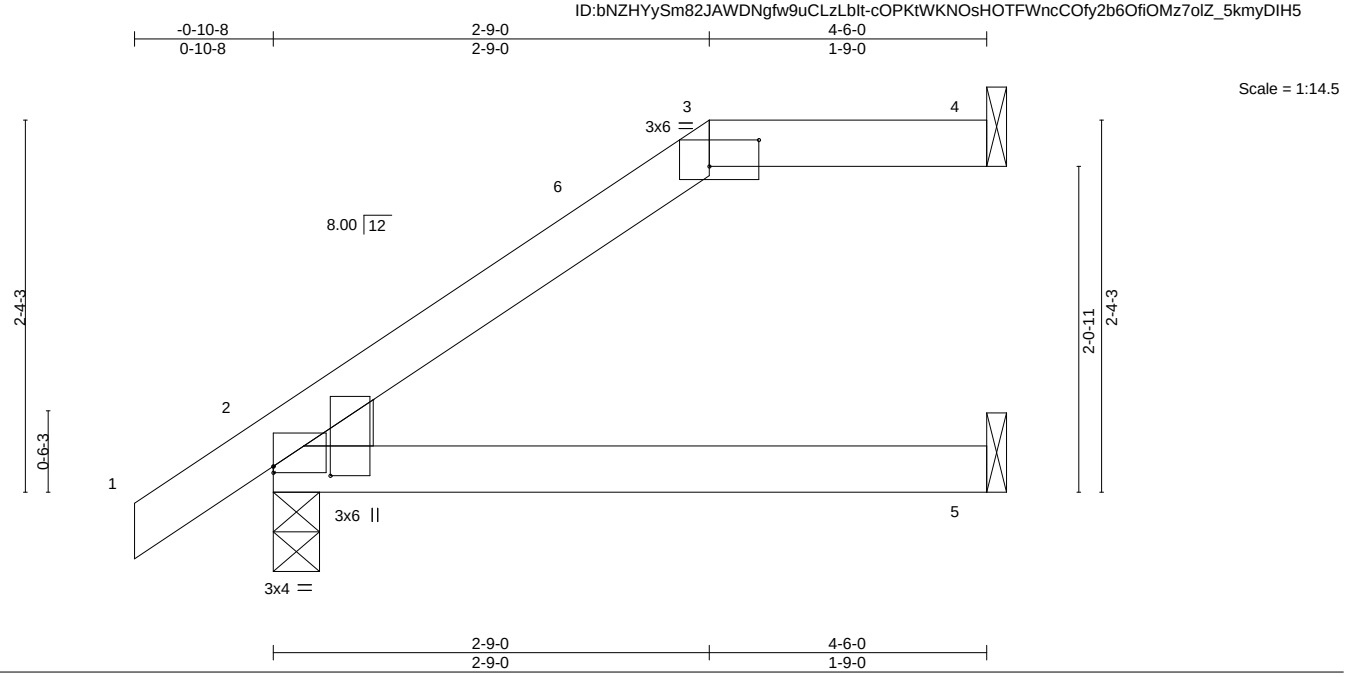

Plate Offsets (X,Y)-- [2:0-0-11,0-4-5], [2:0-0-0,0-0-8], [3:0-3-12,0-2-0]

LOADING (psf)		SPACING-	2-0-0	CSI.		DEFL.	in	(loc)	l/defl	L/d	PLATES	GRIP
TCLL	20.0	Plate Grip DOL	1.15	TC	0.26	Vert(LL)	0.02	2-5	>999	240	MT20	197/144
TCDL	10.0	Lumber DOL	1.15	BC	0.20	Vert(CT)	-0.03	2-5	>999	180		
BCLL	0.0 *	Rep Stress Incr	YES	WB	0.00	Horz(CT)	0.04	4	n/a	n/a		
BCDL	10.0	Code IRC2018/TPI2014		Matrix-P							Weight: 17 lb	FT = 20%

LUMBER-
TOP CHORD 2x4 SP No.2 or 2x4 SPF No.2
BOT CHORD 2x4 SP No.2 or 2x4 SPF No.2
WEDGE
Left: 2x4 SP No.3

BRACING-
TOP CHORD Structural wood sheathing directly applied or 4-6-0 oc purlins, except 2-0-0 oc purlins: 3-4.
BOT CHORD Rigid ceiling directly applied or 10-0-0 oc bracing.

REACTIONS. (size) 4=Mechanical, 2=0-3-8, 5=Mechanical
Max Horz 2=88(LC 12)
Max Uplift 4=-41(LC 9), 2=-27(LC 12)
Max Grav 4=113(LC 1), 2=240(LC 1), 5=81(LC 3)

FORCES. (lb) - Max. Comp./Max. Ten. - All forces 250 (lb) or less except when shown.

NOTES-
1) Unbalanced roof live loads have been considered for this design.
2) Wind: ASCE 7-16; Vult=130mph (3-second gust) Vasd=103mph; TCDL=6.0psf; BCDL=6.0psf; h=25ft; Cat. II; Exp B; Enclosed; MWFRS (envelope) gable end zone and C-C Exterior(2E) -0-10-8 to 2-1-8, Interior(1) 2-1-8 to 2-9-0, Exterior(2E) 2-9-0 to 4-5-4 zone;C-C for members and forces & MWFRS for reactions shown; Lumber DOL=1.60 plate grip DOL=1.60
3) Provide adequate drainage to prevent water ponding.
4) This truss has been designed for a 10.0 psf bottom chord live load nonconcurrent with any other live loads.
5) * This truss has been designed for a live load of 20.0psf on the bottom chord in all areas where a rectangle 3-6-0 tall by 2-0-0 wide will fit between the bottom chord and any other members.
6) Refer to girder(s) for truss to truss connections.
7) Provide mechanical connection (by others) of truss to bearing plate capable of withstanding 100 lb uplift at joint(s) 4.
8) One MTS12 Simpson Strong-Tie connectors recommended to connect truss to bearing walls due to UPLIFT at jt(s) 5. This connection is for uplift only and does not consider lateral forces.
9) One H2.5A Simpson Strong-Tie connectors recommended to connect truss to bearing walls due to UPLIFT at jt(s) 2. This connection is for uplift only and does not consider lateral forces.
10) This truss is designed in accordance with the 2018 International Residential Code sections R502.11.1 and R802.10.2 and referenced standard ANSI/TPI 1.
11) Graphical purlin representation does not depict the size or the orientation of the purlin along the top and/or bottom chord.

December 2,2021

WARNING - Verify design parameters and READ NOTES ON THIS AND INCLUDED MITEK REFERENCE PAGE MII-7473 rev. 5/19/2020 BEFORE USE.
Design valid for use only with MiTek® connectors. This design is based only upon parameters shown, and is for an individual building component, not a truss system. Before use, the building designer must verify the applicability of design parameters and properly incorporate this design into the overall building design. Bracing indicated is to prevent buckling of individual truss web and/or chord members only. Additional temporary and permanent bracing is always required for stability and to prevent collapse with possible personal injury and property damage. For general guidance regarding the fabrication, storage, delivery, erection and bracing of trusses and truss systems, see **ANSI/TPI1 Quality Criteria, DSB-89 and BCSI Building Component Safety Information** available from Truss Plate Institute, 2670 Crain Highway, Suite 203 Waldorf, MD 20601

ENGINEERING BY TRENCO A MiTek Affiliate
818 Soundside Road
Edenton, NC 27932

Job	Truss	Truss Type	Qty	Ply	KB Home 149.2115.D
149_2115_D	J4	Jack-Open Girder	2	1	I49048131 Job Reference (optional)

84 Components (Dunn), Dunn, NC - 28334, 8.520 s Aug 27 2021 MiTek Industries, Inc. Wed Dec 1 15:18:49 2021 Page 1
ID:bNZHYySm82JAWDNgfw9uCLzLbIt-4azj4sL099PF4P5_9wwuVG7HP32L5QNx_DjfGCyDIH4

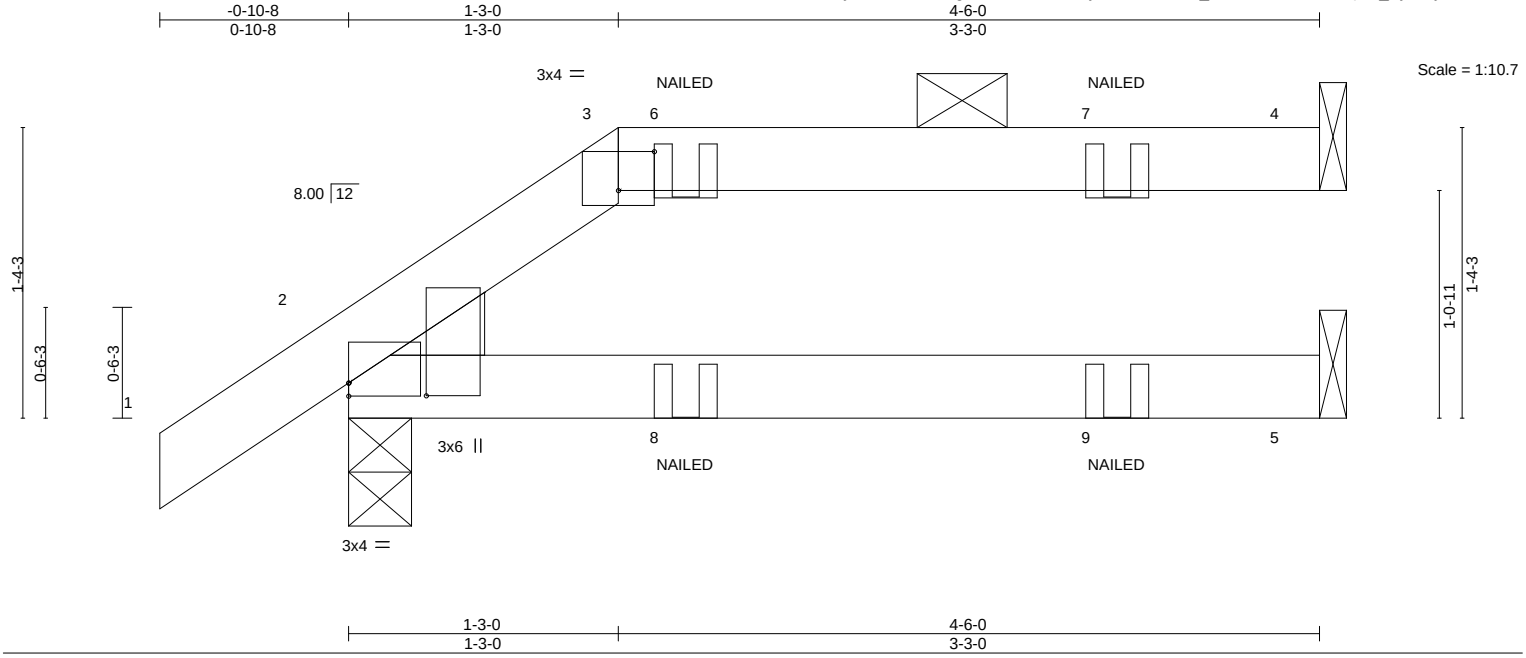

Plate Offsets (X,Y)-- [2:0-0-11,0-4-5], [2:0-0-0,0-0-12], [3:0-2-0,0-2-3]

LOADING (psf)		SPACING- 2-0-0		CSI.		DEFL.	in	(loc)	l/defl	L/d	PLATES	GRIP
TCLL	20.0	Plate Grip DOL	1.15	TC	0.30	Vert(LL)	-0.02	2-5	>999	240	MT20	197/144
TCDL	10.0	Lumber DOL	1.15	BC	0.22	Vert(CT)	-0.03	2-5	>999	180		
BCLL	0.0 *	Rep Stress Incr	NO	WB	0.00	Horz(CT)	0.03	4	n/a	n/a		
BCDL	10.0	Code IRC2018/TPI2014		Matrix-P							Weight: 16 lb	FT = 20%

LUMBER-
TOP CHORD 2x4 SP No.2 or 2x4 SPF No.2
BOT CHORD 2x4 SP No.2 or 2x4 SPF No.2
WEDGE
Left: 2x4 SP No.3

BRACING-
TOP CHORD Structural wood sheathing directly applied or 4-6-0 oc purlins, except 2-0-0 oc purlins: 3-4.
BOT CHORD Rigid ceiling directly applied or 10-0-0 oc bracing.

REACTIONS. (size) 4=Mechanical, 2=0-3-8, 5=Mechanical
Max Horz 2=51(LC 37)
Max Uplift 4=-48(LC 9), 2=-38(LC 12)
Max Grav 4=114(LC 1), 2=240(LC 1), 5=81(LC 3)

FORCES. (lb) - Max. Comp./Max. Ten. - All forces 250 (lb) or less except when shown.

NOTES-
1) Unbalanced roof live loads have been considered for this design.
2) Wind: ASCE 7-16; Vult=130mph (3-second gust) Vasd=103mph; TCDL=6.0psf; BCDL=6.0psf; h=25ft; Cat. II; Exp B; Enclosed; MWFRS (envelope) gable end zone and C-C Exterior(2E) zone;C-C for members and forces & MWFRS for reactions shown; Lumber DOL=1.60 plate grip DOL=1.60
3) Provide adequate drainage to prevent water ponding.
4) This truss has been designed for a 10.0 psf bottom chord live load nonconcurrent with any other live loads.
5) * This truss has been designed for a live load of 20.0psf on the bottom chord in all areas where a rectangle 3-6-0 tall by 2-0-0 wide will fit between the bottom chord and any other members.
6) Refer to girder(s) for truss to truss connections.
7) Provide mechanical connection (by others) of truss to bearing plate capable of withstanding 100 lb uplift at joint(s) 4.
8) One MTS12 Simpson Strong-Tie connectors recommended to connect truss to bearing walls due to UPLIFT at jt(s) 5. This connection is for uplift only and does not consider lateral forces.
9) One H2.5A Simpson Strong-Tie connectors recommended to connect truss to bearing walls due to UPLIFT at jt(s) 2. This connection is for uplift only and does not consider lateral forces.
10) This truss is designed in accordance with the 2018 International Residential Code sections R502.11.1 and R802.10.2 and referenced standard ANSI/TPI 1.
11) Graphical purlin representation does not depict the size or the orientation of the purlin along the top and/or bottom chord.
12) "NAILED" indicates 3-10d (0.148"x3") or 3-12d (0.148"x3.25") toe-nails per NDS guidlines.
13) In the LOAD CASE(S) section, loads applied to the face of the truss are noted as front (F) or back (B).

LOAD CASE(S) Standard
1) Dead + Roof Live (balanced): Lumber Increase=1.15, Plate Increase=1.15
Uniform Loads (plf)
Vert: 1-3=-60, 3-4=-60, 2-5=-20
Concentrated Loads (lb)
Vert: 9=-1(B)

December 2,2021

WARNING - Verify design parameters and READ NOTES ON THIS AND INCLUDED MITEK REFERENCE PAGE MII-7473 rev. 5/19/2020 BEFORE USE.
Design valid for use only with MiTek® connectors. This design is based only upon parameters shown, and is for an individual building component, not a truss system. Before use, the building designer must verify the applicability of design parameters and properly incorporate this design into the overall building design. Bracing indicated is to prevent buckling of individual truss web and/or chord members only. Additional temporary and permanent bracing is always required for stability and to prevent collapse with possible personal injury and property damage. For general guidance regarding the fabrication, storage, delivery, erection and bracing of trusses and truss systems, see **ANSI/TPI1 Quality Criteria, DSB-89 and BCSI Building Component Safety Information** available from Truss Plate Institute, 2670 Crain Highway, Suite 203 Waldorf, MD 20601

ENGINEERING BY TRENCO A MiTek Affiliate
818 Soundside Road
Edenton, NC 27932

Job	Truss	Truss Type	Qty	Ply	KB Home 149.2115.D
149_2115_D	J5	Jack-Open	4	1	I49048132 Job Reference (optional)

84 Components (Dunn), Dunn, NC - 28334, 8.520 s Aug 27 2021 MiTek Industries, Inc. Wed Dec 1 15:18:49 2021 Page 1
ID:bNZHYySm82JAWDNgfw9uCLzLbIt-4azj4sL099PF4P5_9wwuVG7LH3555QNx_DjfGCyDIH4

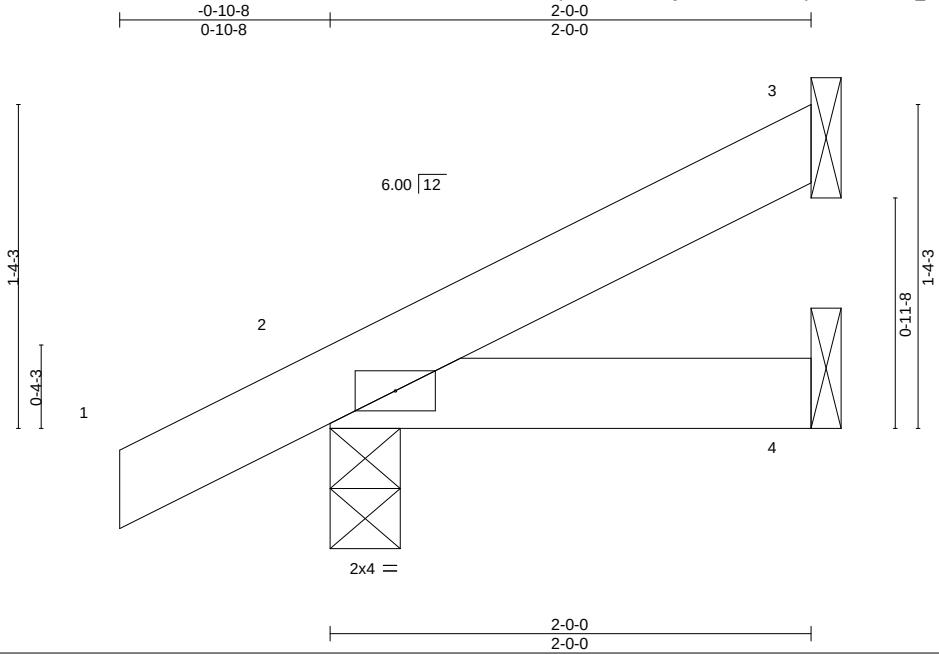

LOADING (psf)		SPACING- 2-0-0		CSI.		DEFL. in (loc) l/defl L/d		PLATES GRIP
TCLL	20.0	Plate Grip DOL	1.15	TC	0.06	Vert(LL) -0.00 2 >999 240		MT20 197/144
TCDL	10.0	Lumber DOL	1.15	BC	0.04	Vert(CT) -0.00 2-4 >999 180		
BCLL	0.0 *	Rep Stress Incr	YES	WB	0.00	Horz(CT) -0.00 3 n/a n/a		
BCDL	10.0	Code IRC2018/TPI2014		Matrix-P				Weight: 8 lb FT = 20%

LUMBER-
TOP CHORD 2x4 SP No.2 or 2x4 SPF No.2
BOT CHORD 2x4 SP No.2 or 2x4 SPF No.2

BRACING-
TOP CHORD Structural wood sheathing directly applied or 2-0-0 oc purlins.
BOT CHORD Rigid ceiling directly applied or 10-0-0 oc bracing.

REACTIONS. (size) 3=Mechanical, 2=0-3-8, 4=Mechanical
Max Horz 2=50(LC 12)
Max Uplift 3=-29(LC 12), 2=-25(LC 12)
Max Grav 3=46(LC 1), 2=145(LC 1), 4=39(LC 3)

FORCES. (lb) - Max. Comp./Max. Ten. - All forces 250 (lb) or less except when shown.

NOTES-
1) Wind: ASCE 7-16; Vult=130mph (3-second gust) Vasd=103mph; TCDL=6.0psf; BCDL=6.0psf; h=25ft; Cat. II; Exp B; Enclosed; MWFRS (envelope) gable end zone and C-C Exterior(2E) zone;C-C for members and forces & MWFRS for reactions shown; Lumber DOL=1.60 plate grip DOL=1.60
2) This truss has been designed for a 10.0 psf bottom chord live load nonconcurrent with any other live loads.
3) * This truss has been designed for a live load of 20.0psf on the bottom chord in all areas where a rectangle 3-6-0 tall by 2-0-0 wide will fit between the bottom chord and any other members.
4) Refer to girder(s) for truss to truss connections.
5) Provide mechanical connection (by others) of truss to bearing plate capable of withstanding 100 lb uplift at joint(s) 3.
6) One H2.5A Simpson Strong-Tie connectors recommended to connect truss to bearing walls due to UPLIFT at jt(s) 2. This connection is for uplift only and does not consider lateral forces.
7) This truss is designed in accordance with the 2018 International Residential Code sections R502.11.1 and R802.10.2 and referenced standard ANSI/TPI 1.

December 2,2021

WARNING - Verify design parameters and READ NOTES ON THIS AND INCLUDED MITEK REFERENCE PAGE MII-7473 rev. 5/19/2020 BEFORE USE.
Design valid for use only with MiTek® connectors. This design is based only upon parameters shown, and is for an individual building component, not a truss system. Before use, the building designer must verify the applicability of design parameters and properly incorporate this design into the overall building design. Bracing indicated is to prevent buckling of individual truss web and/or chord members only. Additional temporary and permanent bracing is always required for stability and to prevent collapse with possible personal injury and property damage. For general guidance regarding the fabrication, storage, delivery, erection and bracing of trusses and truss systems, see **ANSI/TPI1 Quality Criteria, DSB-89 and BCSI Building Component Safety Information** available from Truss Plate Institute, 2670 Crain Highway, Suite 203 Waldorf, MD 20601

ENGINEERING BY TRENCO A MiTek Affiliate
818 Soundside Road
Edenton, NC 27932

Job	Truss	Truss Type	Qty	Ply	KB Home 149.2115.D
149_2115_D	JE	Jack-Open Supported Gable	1	1	I49048133 Job Reference (optional)

84 Components (Dunn), Dunn, NC - 28334, 8.520 s Aug 27 2021 MiTek Industries, Inc. Wed Dec 1 15:18:50 2021 Page 1
ID:bNZHYySm82JAWDNgfw9uCLzLbIt-YnX5ICLewTX6iZfAjdR72TgVcTQAqsL5CtTCofyDIH3

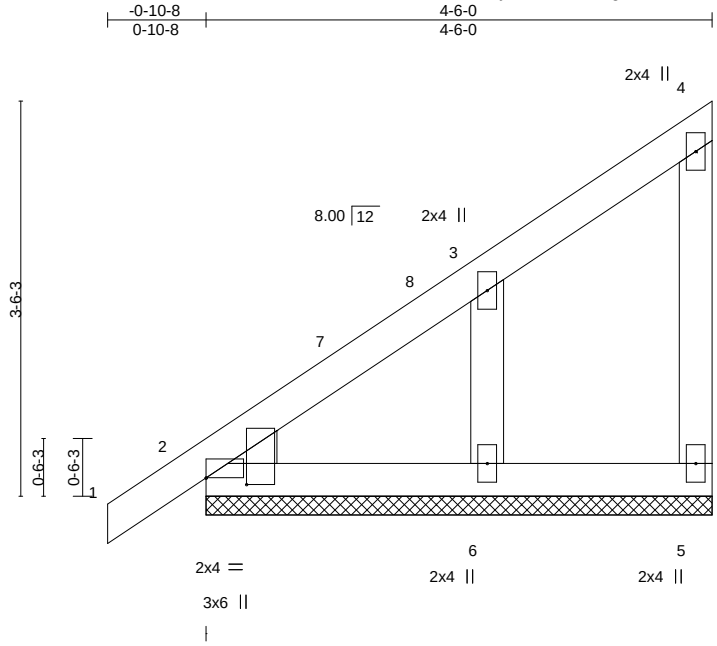

Plate Offsets (X,Y)-- [2:0-0-0,0-0-0], [2:0-0-11,0-4-5]

LOADING (psf)		SPACING- 2-0-0		CSI.		DEFL. in (loc) l/defl L/d		PLATES	GRIP
TCLL	20.0	Plate Grip DOL	1.15	TC	0.08	Vert(LL) -0.00 1 n/r 120		MT20	197/144
TCDL	10.0	Lumber DOL	1.15	BC	0.05	Vert(CT) 0.00 1 n/r 120			
BCLL	0.0 *	Rep Stress Incr	YES	WB	0.08	Horz(CT) 0.00 n/a n/a			
BCDL	10.0	Code IRC2018/TPI2014		Matrix-P				Weight: 24 lb	FT = 20%

LUMBER-
TOP CHORD 2x4 SP No.2 or 2x4 SPF No.2
BOT CHORD 2x4 SP No.2 or 2x4 SPF No.2
WEBS 2x4 SP No.3
OTHERS 2x4 SP No.3
WEDGE
Left: 2x4 SP No.3

BRACING-
TOP CHORD Structural wood sheathing directly applied or 4-6-0 oc purlins, except end verticals.
BOT CHORD Rigid ceiling directly applied or 10-0-0 oc bracing.

REACTIONS. (size) 5=4-6-0, 2=4-6-0, 6=4-6-0
Max Horz 2=126(LC 12)
Max Uplift 5=-18(LC 12), 6=-83(LC 12)
Max Grav 5=53(LC 19), 2=144(LC 1), 6=221(LC 19)

FORCES. (lb) - Max. Comp./Max. Ten. - All forces 250 (lb) or less except when shown.
WEBS 3-6=-193/277

NOTES-
1) Wind: ASCE 7-16; Vult=130mph (3-second gust) Vasd=103mph; TCDL=6.0psf; BCDL=6.0psf; h=25ft; Cat. II; Exp B; Enclosed; MWFRS (envelope) gable end zone and C-C Corner(3E) -0-10-8 to 2-1-8, Exterior(2N) 2-1-8 to 4-4-4 zone;C-C for members and forces & MWFRS for reactions shown; Lumber DOL=1.60 plate grip DOL=1.60
2) Truss designed for wind loads in the plane of the truss only. For studs exposed to wind (normal to the face), see Standard Industry Gable End Details as applicable, or consult qualified building designer as per ANSI/TPI 1.
3) Gable requires continuous bottom chord bearing.
4) Gable studs spaced at 2-0-0 oc.
5) This truss has been designed for a 10.0 psf bottom chord live load nonconcurrent with any other live loads.
6) * This truss has been designed for a live load of 20.0psf on the bottom chord in all areas where a rectangle 3-6-0 tall by 2-0-0 wide will fit between the bottom chord and any other members.
7) N/A

8) This truss is designed in accordance with the 2018 International Residential Code sections R502.11.1 and R802.10.2 and referenced standard ANSI/TPI 1.

December 2,2021

WARNING - Verify design parameters and READ NOTES ON THIS AND INCLUDED MITEK REFERENCE PAGE MII-7473 rev. 5/19/2020 BEFORE USE.
Design valid for use only with MiTek® connectors. This design is based only upon parameters shown, and is for an individual building component, not a truss system. Before use, the building designer must verify the applicability of design parameters and properly incorporate this design into the overall building design. Bracing indicated is to prevent buckling of individual truss web and/or chord members only. Additional temporary and permanent bracing is always required for stability and to prevent collapse with possible personal injury and property damage. For general guidance regarding the fabrication, storage, delivery, erection and bracing of trusses and truss systems, see **ANSI/TPI1 Quality Criteria, DSB-89 and BCSI Building Component Safety Information** available from Truss Plate Institute, 2670 Crain Highway, Suite 203 Waldorf, MD 20601

ENGINEERING BY TRENCO A MiTek Affiliate
818 Soundside Road
Edenton, NC 27932

Job	Truss	Truss Type	Qty	Ply	KB Home 149.2115.D
149_2115_D	PB1	Piggyback	1	1	I49048134 Job Reference (optional)

84 Components (Dunn), Dunn, NC - 28334, 8.520 s Aug 27 2021 MiTek Industries, Inc. Wed Dec 1 15:18:51 2021 Page 1
ID:bNZHYySm82JAWDNgfw9uCLzLbIt-0z4TVYMGhnfyKjEMHLyMahDfLskdZK9ERWClL5yDIH2

2-4-0 | 8-0-0 | 10-4-0
2-4-0 | 5-8-0 | 2-4-0

Scale = 1:18.3

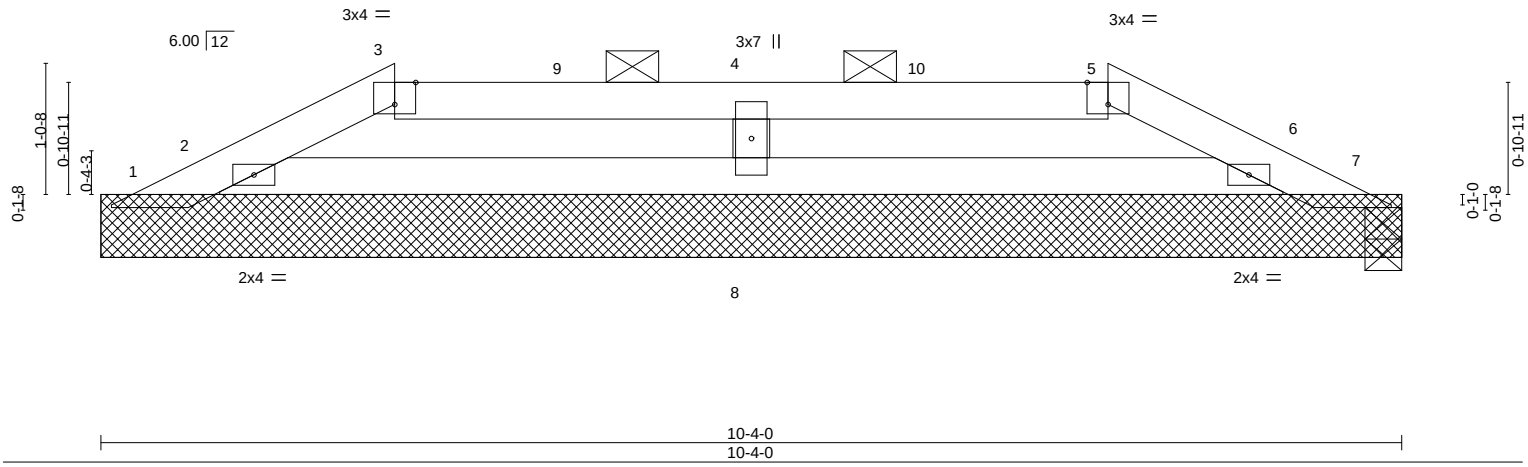

10-4-0
10-4-0

Plate Offsets (X,Y)-- [3:0-2-0,Edge], [5:0-2-0,Edge]

LOADING (psf)		SPACING- 2-0-0		CSI.		DEFL.	in	(loc)	l/defl	L/d	PLATES	GRIP
TCLL	20.0	Plate Grip DOL	1.15	TC	0.15	Vert(LL)	-0.01	6-8	>999	240	MT20	197/144
TCDL	10.0	Lumber DOL	1.15	BC	0.16	Vert(CT)	-0.01	6-8	>999	180		
BCLL	0.0 *	Rep Stress Incr	YES	WB	0.05	Horz(CT)	0.00	7	n/a	n/a		
BCDL	10.0	Code IRC2018/TPI2014		Matrix-S							Weight: 29 lb	FT = 20%

LUMBER-
TOP CHORD 2x4 SP No.2 or 2x4 SPF No.2
BOT CHORD 2x4 SP No.2 or 2x4 SPF No.2
WEBS 2x4 SP No.3

BRACING-
TOP CHORD Structural wood sheathing directly applied or 6-0-0 oc purlins, except 2-0-0 oc purlins (6-0-0 max.): 3-5.
BOT CHORD Rigid ceiling directly applied or 10-0-0 oc bracing.

REACTIONS. All bearings 10-4-0.
(lb) - Max Horz 1=-17(LC 13)
Max Uplift All uplift 100 lb or less at joint(s) 1, 7, 7, 2, 6, 8
Max Grav All reactions 250 lb or less at joint(s) 1, 7 except 2=284(LC 25), 6=268(LC 26), 8=322(LC 1)

FORCES. (lb) - Max. Comp./Max. Ten. - All forces 250 (lb) or less except when shown.

NOTES-
1) Unbalanced roof live loads have been considered for this design.
2) Wind: ASCE 7-16; Vult=130mph (3-second gust) Vasd=103mph; TCDL=6.0psf; BCDL=6.0psf; h=25ft; Cat. II; Exp B; Enclosed; MWFRS (envelope) gable end zone and C-C Exterior(2E) 0-4-11 to 2-4-0, Exterior(2R) 2-4-0 to 6-6-15, Interior(1) 6-6-15 to 8-0-0, Exterior(2E) 8-0-0 to 10-1-4 zone;C-C for members and forces & MWFRS for reactions shown; Lumber DOL=1.60 plate grip DOL=1.60
3) Provide adequate drainage to prevent water ponding.
4) This truss has been designed for a 10.0 psf bottom chord live load nonconcurrent with any other live loads.
5) * This truss has been designed for a live load of 20.0psf on the bottom chord in all areas where a rectangle 3-6-0 tall by 2-0-0 wide will fit between the bottom chord and any other members.
6) Provide mechanical connection (by others) of truss to bearing plate capable of withstanding 100 lb uplift at joint(s) 1, 7.
7) N/A

8) This truss is designed in accordance with the 2018 International Residential Code sections R502.11.1 and R802.10.2 and referenced standard ANSI/TPI 1.
9) N/A

10) Graphical purlin representation does not depict the size or the orientation of the purlin along the top and/or bottom chord.

December 2,2021

WARNING - Verify design parameters and READ NOTES ON THIS AND INCLUDED MITEK REFERENCE PAGE MII-7473 rev. 5/19/2020 BEFORE USE.
Design valid for use only with MiTek® connectors. This design is based only upon parameters shown, and is for an individual building component, not a truss system. Before use, the building designer must verify the applicability of design parameters and properly incorporate this design into the overall building design. Bracing indicated is to prevent buckling of individual truss web and/or chord members only. Additional temporary and permanent bracing is always required for stability and to prevent collapse with possible personal injury and property damage. For general guidance regarding the fabrication, storage, delivery, erection and bracing of trusses and truss systems, see **ANSI/TPI1 Quality Criteria, DSB-89 and BCSI Building Component Safety Information** available from Truss Plate Institute, 2670 Crain Highway, Suite 203 Waldorf, MD 20601

ENGINEERING BY TRENCO A MiTek Affiliate
818 Soundside Road
Edenton, NC 27932

Job	Truss	Truss Type	Qty	Ply	KB Home 149.2115.D
149_2115_D	PB2	Piggyback	7	1	I49048135 Job Reference (optional)

84 Components (Dunn), Dunn, NC - 28334, 8.520 s Aug 27 2021 MiTek Industries, Inc. Wed Dec 1 15:18:52 2021 Page 1
ID:bNZHYySm82JAWDNgfw9uCLzLbIt-U9eritNuS4npxtpZr2Tb7uloDG4eInVNgAyJtXyDIH1

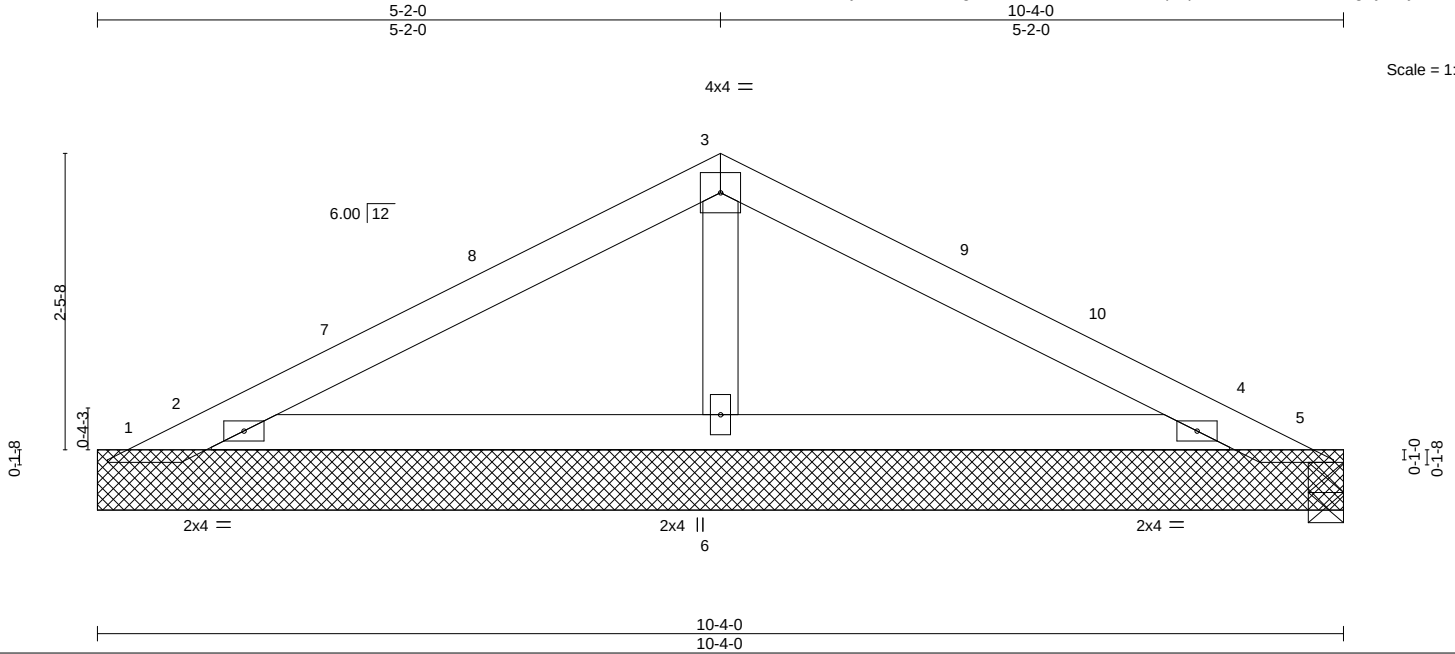

LOADING (psf)		SPACING- 2-0-0		CSI.		DEFL.	in	(loc)	l/defl	L/d	PLATES	GRIP
TCLL	20.0	Plate Grip DOL	1.15	TC	0.27	Vert(LL)	-0.01	4-6	>999	240	MT20	197/144
TCDL	10.0	Lumber DOL	1.15	BC	0.18	Vert(CT)	-0.02	4-6	>999	180		
BCLL	0.0 *	Rep Stress Incr	YES	WB	0.04	Horz(CT)	0.00	4	n/a	n/a		
BCDL	10.0	Code IRC2018/TPI2014		Matrix-P							Weight: 32 lb	FT = 20%

LUMBER-
TOP CHORD 2x4 SP No.2 or 2x4 SPF No.2
BOT CHORD 2x4 SP No.2 or 2x4 SPF No.2
OTHERS 2x4 SP No.3

BRACING-
TOP CHORD Structural wood sheathing directly applied or 6-0-0 oc purlins.
BOT CHORD Rigid ceiling directly applied or 10-0-0 oc bracing.

REACTIONS. All bearings 10-4-0.
(lb) - Max Horz 1=-41(LC 13)
Max Uplift All uplift 100 lb or less at joint(s) except 1=-192(LC 1), 5=-133(LC 1), 5=-133(LC 1), 2=-189(LC 12), 4=-150(LC 13)
Max Grav All reactions 250 lb or less at joint(s) 1, 5 except 2=431(LC 1), 4=384(LC 1), 6=288(LC 1)

FORCES. (lb) - Max. Comp./Max. Ten. - All forces 250 (lb) or less except when shown.

NOTES-
1) Unbalanced roof live loads have been considered for this design.
2) Wind: ASCE 7-16; Vult=130mph (3-second gust) Vasd=103mph; TCDL=6.0psf; BCDL=6.0psf; h=25ft; Cat. II; Exp B; Enclosed; MWFRS (envelope) gable end zone and C-C Exterior(2E) 0-4-11 to 3-4-11, Interior(1) 3-4-11 to 5-2-0, Exterior(2R) 5-2-0 to 8-2-0, Interior(1) 8-2-0 to 10-1-4 zone;C-C for members and forces & MWFRS for reactions shown; Lumber DOL=1.60 plate grip DOL=1.60
3) This truss has been designed for a 10.0 psf bottom chord live load nonconcurrent with any other live loads.
4) * This truss has been designed for a live load of 20.0psf on the bottom chord in all areas where a rectangle 3-6-0 tall by 2-0-0 wide will fit between the bottom chord and any other members.
5) Provide mechanical connection (by others) of truss to bearing plate capable of withstanding 192 lb uplift at joint 1 and 133 lb uplift at joint 5.
6) N/A

7) This truss is designed in accordance with the 2018 International Residential Code sections R502.11.1 and R802.10.2 and referenced standard ANSI/TPI 1.

December 2,2021

WARNING - Verify design parameters and READ NOTES ON THIS AND INCLUDED MITEK REFERENCE PAGE MII-7473 rev. 5/19/2020 BEFORE USE.
Design valid for use only with MiTek® connectors. This design is based only upon parameters shown, and is for an individual building component, not a truss system. Before use, the building designer must verify the applicability of design parameters and properly incorporate this design into the overall building design. Bracing indicated is to prevent buckling of individual truss web and/or chord members only. Additional temporary and permanent bracing is always required for stability and to prevent collapse with possible personal injury and property damage. For general guidance regarding the fabrication, storage, delivery, erection and bracing of trusses and truss systems, see **ANSI/TPI1 Quality Criteria, DSB-89 and BCSI Building Component Safety Information** available from Truss Plate Institute, 2670 Crain Highway, Suite 203 Waldorf, MD 20601

ENGINEERING BY TRENCO A MiTek Affiliate
818 Soundside Road
Edenton, NC 27932

Job	Truss	Truss Type	Qty	Ply	KB Home 149.2115.D
149_2115_D	PB3	Piggyback	1	1	I49048136 Job Reference (optional)

84 Components (Dunn), Dunn, NC - 28334, 8.520 s Aug 27 2021 MiTek Industries, Inc. Wed Dec 1 15:18:53 2021 Page 1
ID:bNZHYySm82JAWDNgfw9uCLzLbIt-yMCDwDOWCOvgZ0OlOm_qf6I?0gQ51EhXvqhsP_yDIH0

2-6-0 | 7-10-0 | 10-4-0
2-6-0 | 5-4-0 | 2-6-0

Scale = 1:18.3

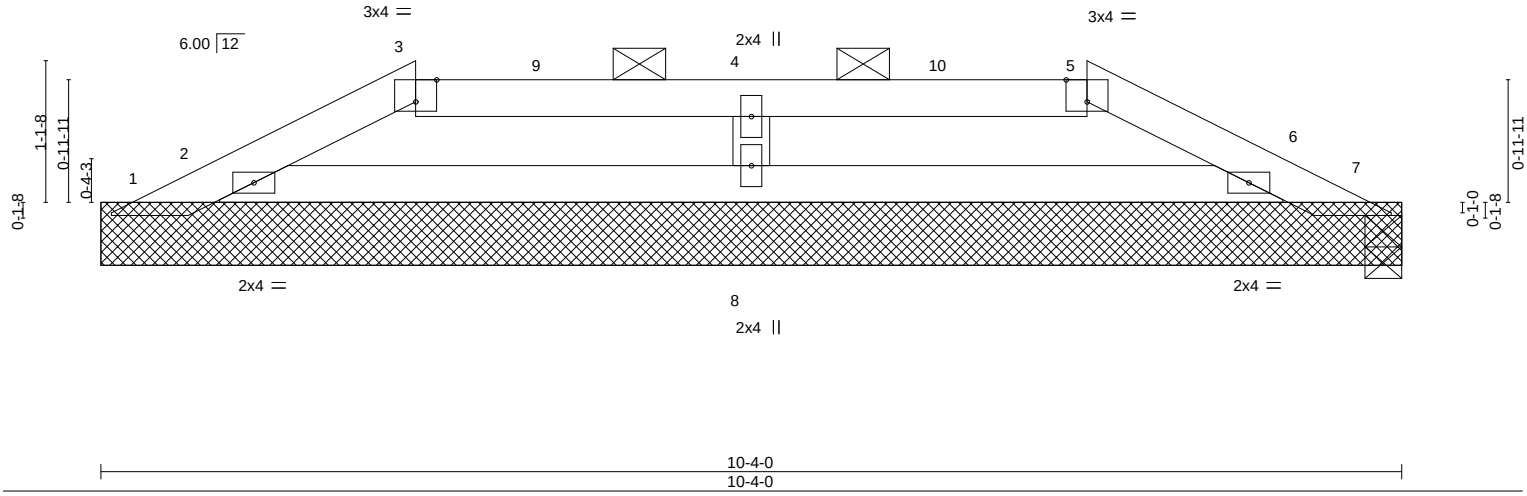

10-4-0
10-4-0

Plate Offsets (X,Y)-- [3:0-2-0,Edge], [5:0-2-0,Edge]

LOADING (psf)		SPACING- 2-0-0		CSI.		DEFL. in (loc) l/defl L/d		PLATES	GRIP
TCLL	20.0	Plate Grip DOL	1.15	TC	0.14	Vert(LL) -0.01 6-8 >999 240		MT20	197/144
TCDL	10.0	Lumber DOL	1.15	BC	0.16	Vert(CT) -0.01 6-8 >999 180			
BCLL	0.0 *	Rep Stress Incr	YES	WB	0.04	Horz(CT) 0.00 7 n/a n/a			
BCDL	10.0	Code IRC2018/TPI2014		Matrix-S				Weight: 29 lb	FT = 20%

LUMBER-
TOP CHORD 2x4 SP No.2 or 2x4 SPF No.2
BOT CHORD 2x4 SP No.2 or 2x4 SPF No.2
WEBS 2x4 SP No.3

BRACING-
TOP CHORD Structural wood sheathing directly applied or 6-0-0 oc purlins, except 2-0-0 oc purlins (6-0-0 max.): 3-5.
BOT CHORD Rigid ceiling directly applied or 10-0-0 oc bracing.

REACTIONS. All bearings 10-4-0.
(lb) - Max Horz 1=-18(LC 13)
Max Uplift All uplift 100 lb or less at joint(s) 1, 7, 7, 2, 6, 8
Max Grav All reactions 250 lb or less at joint(s) 1, 7 except 2=291(LC 25), 6=275(LC 26), 8=312(LC 1)

FORCES. (lb) - Max. Comp./Max. Ten. - All forces 250 (lb) or less except when shown.

NOTES-
1) Unbalanced roof live loads have been considered for this design.
2) Wind: ASCE 7-16; Vult=130mph (3-second gust) Vasd=103mph; TCDL=6.0psf; BCDL=6.0psf; h=25ft; Cat. II; Exp B; Enclosed; MWFRS (envelope) gable end zone and C-C Exterior(2E) 0-4-11 to 2-6-0, Exterior(2R) 2-6-0 to 6-8-15, Interior(1) 6-8-15 to 7-10-0, Exterior(2E) 7-10-0 to 10-1-4 zone;C-C for members and forces & MWFRS for reactions shown; Lumber DOL=1.60 plate grip DOL=1.60
3) Provide adequate drainage to prevent water ponding.
4) This truss has been designed for a 10.0 psf bottom chord live load nonconcurrent with any other live loads.
5) * This truss has been designed for a live load of 20.0psf on the bottom chord in all areas where a rectangle 3-6-0 tall by 2-0-0 wide will fit between the bottom chord and any other members.
6) Provide mechanical connection (by others) of truss to bearing plate capable of withstanding 100 lb uplift at joint(s) 1, 7.
7) N/A

8) This truss is designed in accordance with the 2018 International Residential Code sections R502.11.1 and R802.10.2 and referenced standard ANSI/TPI 1.
9) N/A

10) Graphical purlin representation does not depict the size or the orientation of the purlin along the top and/or bottom chord.

December 2,2021

WARNING - Verify design parameters and READ NOTES ON THIS AND INCLUDED MITEK REFERENCE PAGE MII-7473 rev. 5/19/2020 BEFORE USE.
Design valid for use only with MiTek® connectors. This design is based only upon parameters shown, and is for an individual building component, not a truss system. Before use, the building designer must verify the applicability of design parameters and properly incorporate this design into the overall building design. Bracing indicated is to prevent buckling of individual truss web and/or chord members only. Additional temporary and permanent bracing is always required for stability and to prevent collapse with possible personal injury and property damage. For general guidance regarding the fabrication, storage, delivery, erection and bracing of trusses and truss systems, see **ANSI/TPI1 Quality Criteria, DSB-89 and BCSI Building Component Safety Information** available from Truss Plate Institute, 2670 Crain Highway, Suite 203 Waldorf, MD 20601

ENGINEERING BY TRENCO A MiTek Affiliate
818 Soundside Road
Edenton, NC 27932

Job	Truss	Truss Type	Qty	Ply	KB Home 149.2115.D
149_2115_D	VA1	GABLE	1	1	I49048137 Job Reference (optional)

84 Components (Dunn), Dunn, NC - 28334, 8.520 s Aug 27 2021 MiTek Industries, Inc. Wed Dec 1 15:18:54 2021 Page 1
ID:bNZHYySm82JAWDNgfw9uCLzLblt-RYmc7ZP8zi2XBAzxyTV3CJrC24oQmh?g7URQxQyDIH?

0-11-15 / 0-11-15 | 10-2-1 / 9-2-2 | 16-0-14 / 5-10-13

Scale = 1:27.4

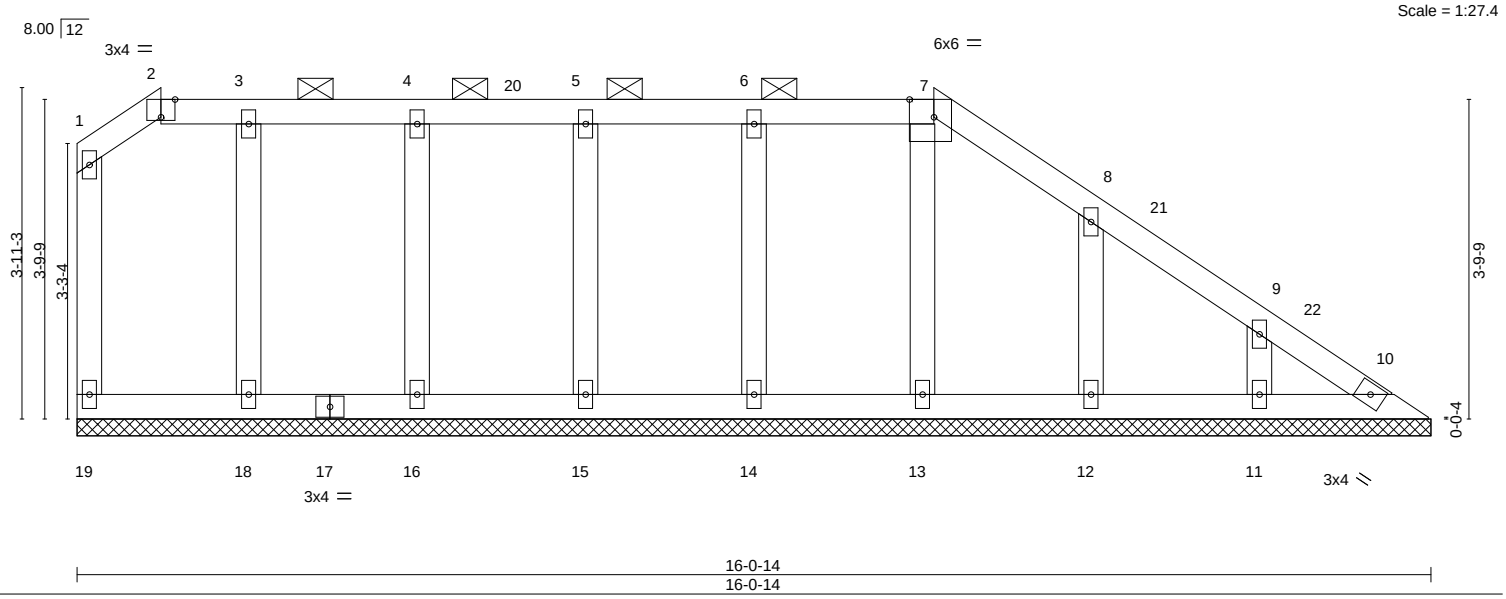

Plate Offsets (X,Y)-- [2:0-2-0,Edge], [7:0-3-8,Edge]

LOADING (psf)		SPACING- 2-0-0		CSI.		DEFL.	in	(loc)	l/defl	L/d	PLATES	GRIP
TCLL	20.0	Plate Grip DOL	1.15	TC	0.05	Vert(LL)	n/a	-	n/a	999	MT20	197/144
TCDL	10.0	Lumber DOL	1.15	BC	0.03	Vert(CT)	n/a	-	n/a	999		
BCLL	0.0 *	Rep Stress Incr	YES	WB	0.04	Horz(CT)	0.00	10	n/a	n/a		
BCDL	10.0	Code IRC2018/TPI2014		Matrix-S							Weight: 82 lb	FT = 20%

LUMBER-
TOP CHORD 2x4 SP No.2 or 2x4 SPF No.2
BOT CHORD 2x4 SP No.2 or 2x4 SPF No.2
WEBS 2x4 SP No.3
OTHERS 2x4 SP No.3

BRACING-
TOP CHORD Structural wood sheathing directly applied or 6-0-0 oc purlins, except end verticals, and 2-0-0 oc purlins (6-0-0 max.): 2-7.
BOT CHORD Rigid ceiling directly applied or 10-0-0 oc bracing.

REACTIONS. All bearings 16-0-14.
(lb) - Max Horz 19=-120(LC 13)
Max Uplift All uplift 100 lb or less at joint(s) 19, 14, 15, 16, 18, 13, 12, 11
Max Grav All reactions 250 lb or less at joint(s) 19, 10, 14, 15, 16, 18, 13, 12, 11

FORCES. (lb) - Max. Comp./Max. Ten. - All forces 250 (lb) or less except when shown.

NOTES-
1) Unbalanced roof live loads have been considered for this design.
2) Wind: ASCE 7-16; Vult=130mph (3-second gust) Vasd=103mph; TCDL=6.0psf; BCDL=6.0psf; h=25ft; Cat. II; Exp B; Enclosed; MWFRS (envelope) gable end zone and C-C Exterior(2E) 0-1-12 to 0-11-15, Exterior(2R) 0-11-15 to 5-2-14, Interior(1) 5-2-14 to 10-2-1, Exterior(2R) 10-2-1 to 14-5-0, Interior(1) 14-5-0 to 15-7-2 zone;C-C for members and forces & MWFRS for reactions shown; Lumber DOL=1.60 plate grip DOL=1.60
3) Provide adequate drainage to prevent water ponding.
4) All plates are 2x4 MT20 unless otherwise indicated.
5) Gable requires continuous bottom chord bearing.
6) This truss has been designed for a 10.0 psf bottom chord live load nonconcurrent with any other live loads.
7) * This truss has been designed for a live load of 20.0psf on the bottom chord in all areas where a rectangle 3-6-0 tall by 2-0-0 wide will fit between the bottom chord and any other members.
8) N/A

9) One MTS12 Simpson Strong-Tie connectors recommended to connect truss to bearing walls due to UPLIFT at jt(s) 10. This connection is for uplift only and does not consider lateral forces.
10) This truss is designed in accordance with the 2018 International Residential Code sections R502.11.1 and R802.10.2 and referenced standard ANSI/TPI 1.
11) Graphical purlin representation does not depict the size or the orientation of the purlin along the top and/or bottom chord.

December 2,2021

WARNING - Verify design parameters and READ NOTES ON THIS AND INCLUDED MITEK REFERENCE PAGE MII-7473 rev. 5/19/2020 BEFORE USE.
Design valid for use only with MiTek® connectors. This design is based only upon parameters shown, and is for an individual building component, not a truss system. Before use, the building designer must verify the applicability of design parameters and properly incorporate this design into the overall building design. Bracing indicated is to prevent buckling of individual truss web and/or chord members only. Additional temporary and permanent bracing is always required for stability and to prevent collapse with possible personal injury and property damage. For general guidance regarding the fabrication, storage, delivery, erection and bracing of trusses and truss systems, see **ANSI/TPI1 Quality Criteria, DSB-89 and BCSI Building Component Safety Information** available from Truss Plate Institute, 2670 Crain Highway, Suite 203 Waldorf, MD 20601

ENGINEERING BY TRENCO A MiTek Affiliate
818 Soundside Road
Edenton, NC 27932

Job	Truss	Truss Type	Qty	Ply	KB Home 149.2115.D
149_2115_D	VA2	Valley	1	1	I49048138 Job Reference (optional)

84 Components (Dunn), Dunn, NC - 28334, 8.520 s Aug 27 2021 MiTek Industries, Inc. Wed Dec 1 15:18:55 2021 Page 1
ID:bNZHYySm82JAWDNgfw9uCLzLbIt-vkK_LvPmk?AOoKY7WB1IkXNJwU7QV7qqM8AzUsyDIH_

2-5-15 (2-5-15) | 8-8-1 (6-2-2) | 14-6-14 (5-10-13)

Scale = 1:26.3

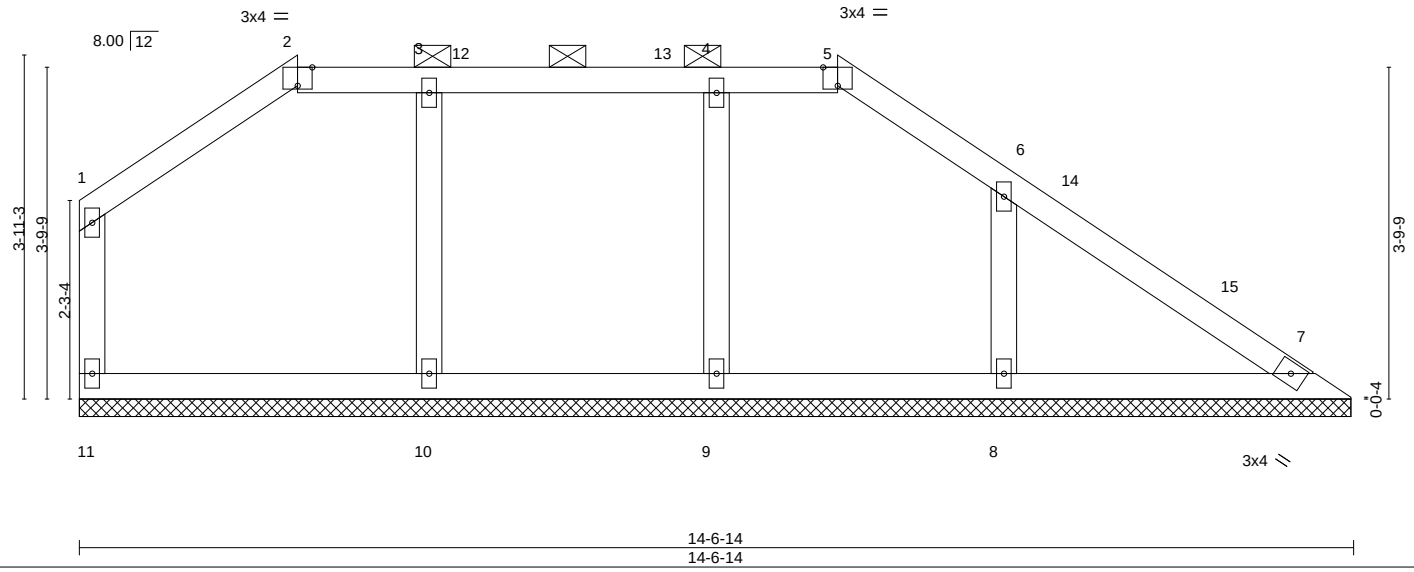

Plate Offsets (X,Y)-- [2:0-2-0,Edge], [5:0-2-0,Edge]

LOADING (psf)		SPACING- 2-0-0		CSI.		DEFL.	in	(loc)	l/defl	L/d	PLATES	GRIP
TCLL	20.0	Plate Grip DOL	1.15	TC	0.30	Vert(LL)	n/a	-	n/a	999	MT20	197/144
TCDL	10.0	Lumber DOL	1.15	BC	0.11	Vert(CT)	n/a	-	n/a	999		
BCLL	0.0 *	Rep Stress Incr	YES	WB	0.07	Horz(CT)	0.00	7	n/a	n/a		
BCDL	10.0	Code IRC2018/TPI2014		Matrix-S							Weight: 61 lb	FT = 20%

LUMBER-
TOP CHORD 2x4 SP No.3
BOT CHORD 2x4 SP No.2 or 2x4 SPF No.2
WEBS 2x4 SP No.3
OTHERS 2x4 SP No.3

BRACING-
TOP CHORD Structural wood sheathing directly applied or 6-0-0 oc purlins, except end verticals, and 2-0-0 oc purlins (6-0-0 max.): 2-5.
BOT CHORD Rigid ceiling directly applied or 10-0-0 oc bracing.

REACTIONS. All bearings 14-6-8.
(lb) - Max Horz 11=-99(LC 13)
Max Uplift All uplift 100 lb or less at joint(s) 11, 9, 8, 10
Max Grav All reactions 250 lb or less at joint(s) 11, 7, 9 except 8=323(LC 20), 10=304(LC 25)

FORCES. (lb) - Max. Comp./Max. Ten. - All forces 250 (lb) or less except when shown.

NOTES-
1) Unbalanced roof live loads have been considered for this design.
2) Wind: ASCE 7-16; Vult=130mph (3-second gust) Vasd=103mph; TCDL=6.0psf; BCDL=6.0psf; h=25ft; Cat. II; Exp B; Enclosed; MWFRS (envelope) gable end zone and C-C Exterior(2E) 0-1-12 to 2-5-15, Exterior(2R) 2-5-15 to 6-8-14, Interior(1) 6-8-14 to 8-8-1, Exterior(2R) 8-8-1 to 12-11-0, Interior(1) 12-11-0 to 14-1-2 zone;C-C for members and forces & MWFRS for reactions shown; Lumber DOL=1.60 plate grip DOL=1.60
3) Provide adequate drainage to prevent water ponding.
4) All plates are 2x4 MT20 unless otherwise indicated.
5) Gable requires continuous bottom chord bearing.
6) This truss has been designed for a 10.0 psf bottom chord live load nonconcurrent with any other live loads.
7) * This truss has been designed for a live load of 20.0psf on the bottom chord in all areas where a rectangle 3-6-0 tall by 2-0-0 wide will fit between the bottom chord and any other members.
8) N/A
9) One MTS12 Simpson Strong-Tie connectors recommended to connect truss to bearing walls due to UPLIFT at jt(s) 7. This connection is for uplift only and does not consider lateral forces.
10) This truss is designed in accordance with the 2018 International Residential Code sections R502.11.1 and R802.10.2 and referenced standard ANSI/TPI 1.
11) Graphical purlin representation does not depict the size or the orientation of the purlin along the top and/or bottom chord.

December 2,2021

WARNING - Verify design parameters and READ NOTES ON THIS AND INCLUDED MITEK REFERENCE PAGE MII-7473 rev. 5/19/2020 BEFORE USE.
Design valid for use only with MiTek® connectors. This design is based only upon parameters shown, and is for an individual building component, not a truss system. Before use, the building designer must verify the applicability of design parameters and properly incorporate this design into the overall building design. Bracing indicated is to prevent buckling of individual truss web and/or chord members only. Additional temporary and permanent bracing is always required for stability and to prevent collapse with possible personal injury and property damage. For general guidance regarding the fabrication, storage, delivery, erection and bracing of trusses and truss systems, see **ANSI/TPI1 Quality Criteria, DSB-89 and BCSI Building Component Safety Information** available from Truss Plate Institute, 2670 Crain Highway, Suite 203 Waldorf, MD 20601

ENGINEERING BY TRENCO A MiTek Affiliate
818 Soundside Road
Edenton, NC 27932

Job	Truss	Truss Type	Qty	Ply	KB Home 149.2115.D
149_2115_D	VA3	GABLE	1	1	I49048139 Job Reference (optional)

84 Components (Dunn), Dunn, NC - 28334, 8.520 s Aug 27 2021 MiTek Industries, Inc. Wed Dec 1 15:18:56 2021 Page 1
ID:bNZHYySm82JAWDNgfw9uCLzLbIt-NxuMYFQPVJIFQU7K4uYXHkwRLtRgEazzbowW?lyDIGz

3-11-15 | 7-2-1 | 13-0-14
3-11-15 | 3-2-2 | 5-10-13

Scale = 1:25.4

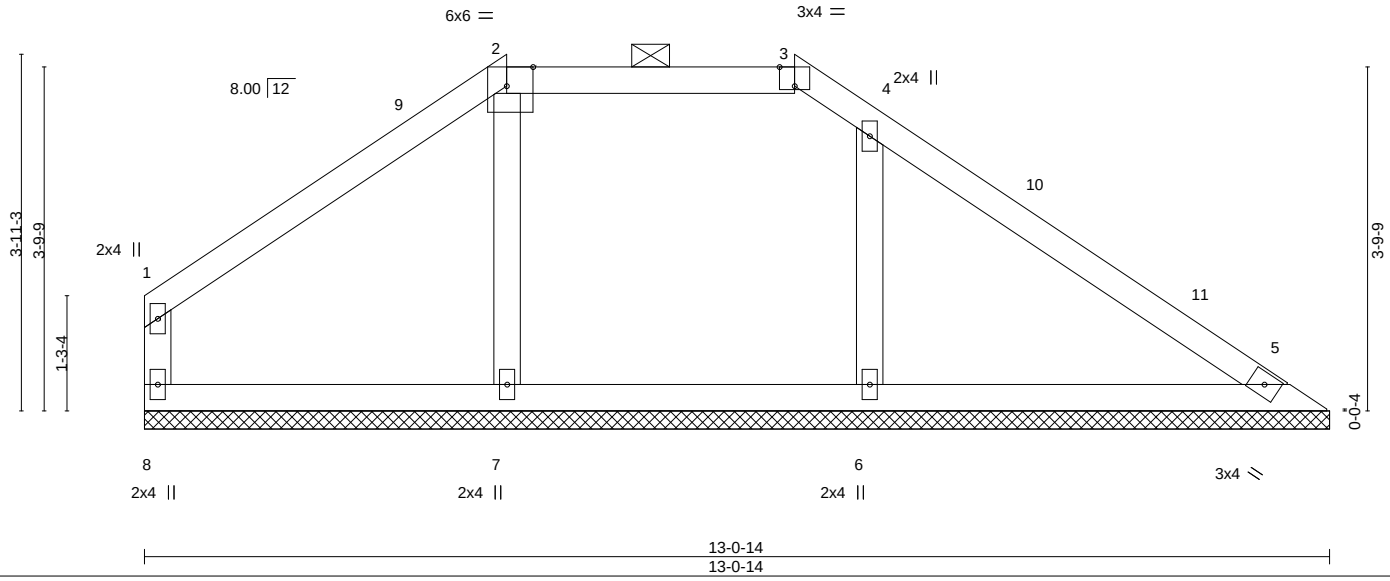

Plate Offsets (X,Y)-- [2:0-3-8,Edge], [3:0-2-0,Edge]

LOADING (psf)		SPACING- 2-0-0		CSI.		DEFL.	in	(loc)	l/defl	L/d	PLATES	GRIP
TCLL	20.0	Plate Grip DOL	1.15	TC	0.45	Vert(LL)	n/a	-	n/a	999	MT20	197/144
TCDL	10.0	Lumber DOL	1.15	BC	0.17	Vert(CT)	n/a	-	n/a	999		
BCLL	0.0 *	Rep Stress Incr	YES	WB	0.07	Horz(CT)	-0.00	5	n/a	n/a		
BCDL	10.0	Code IRC2018/TPI2014		Matrix-S							Weight: 51 lb	FT = 20%

LUMBER-
TOP CHORD 2x4 SP No.3
BOT CHORD 2x4 SP No.2 or 2x4 SPF No.2
WEBS 2x4 SP No.3
OTHERS 2x4 SP No.3

BRACING-
TOP CHORD Structural wood sheathing directly applied or 6-0-0 oc purlins, except end verticals, and 2-0-0 oc purlins (6-0-0 max.): 2-3.
BOT CHORD Rigid ceiling directly applied or 10-0-0 oc bracing.

REACTIONS. All bearings 13-0-14.
(lb) - Max Horz 8=-81(LC 8)
Max Uplift All uplift 100 lb or less at joint(s) 8, 5, 6
Max Grav All reactions 250 lb or less at joint(s) 8, 5 except 7=266(LC 25), 6=398(LC 26)

FORCES. (lb) - Max. Comp./Max. Ten. - All forces 250 (lb) or less except when shown.
WEBS 4-6=-290/124

NOTES-
1) Unbalanced roof live loads have been considered for this design.
2) Wind: ASCE 7-16; Vult=130mph (3-second gust) Vasd=103mph; TCDL=6.0psf; BCDL=6.0psf; h=25ft; Cat. II; Exp B; Enclosed; MWFRS (envelope) gable end zone and C-C Exterior(2E) 0-1-12 to 3-1-12, Interior(1) 3-1-12 to 3-11-15, Exterior(2E) 3-11-15 to 7-2-1, Exterior(2R) 7-2-1 to 11-5-0, Interior(1) 11-5-0 to 12-7-2 zone;C-C for members and forces & MWFRS for reactions shown; Lumber DOL=1.60 plate grip DOL=1.60
3) Provide adequate drainage to prevent water ponding.
4) Gable requires continuous bottom chord bearing.
5) This truss has been designed for a 10.0 psf bottom chord live load nonconcurrent with any other live loads.
6) * This truss has been designed for a live load of 20.0psf on the bottom chord in all areas where a rectangle 3-6-0 tall by 2-0-0 wide will fit between the bottom chord and any other members.
7) N/A
8) One MTS12 Simpson Strong-Tie connectors recommended to connect truss to bearing walls due to UPLIFT at jt(s) 5. This connection is for uplift only and does not consider lateral forces.
9) This truss is designed in accordance with the 2018 International Residential Code sections R502.11.1 and R802.10.2 and referenced standard ANSI/TPI 1.
10) Graphical purlin representation does not depict the size or the orientation of the purlin along the top and/or bottom chord.

December 2,2021

WARNING - Verify design parameters and READ NOTES ON THIS AND INCLUDED MITEK REFERENCE PAGE MII-7473 rev. 5/19/2020 BEFORE USE.
Design valid for use only with MiTek® connectors. This design is based only upon parameters shown, and is for an individual building component, not a truss system. Before use, the building designer must verify the applicability of design parameters and properly incorporate this design into the overall building design. Bracing indicated is to prevent buckling of individual truss web and/or chord members only. Additional temporary and permanent bracing is always required for stability and to prevent collapse with possible personal injury and property damage. For general guidance regarding the fabrication, storage, delivery, erection and bracing of trusses and truss systems, see **ANSI/TPI1 Quality Criteria, DSB-89 and BCSI Building Component Safety Information** available from Truss Plate Institute, 2670 Crain Highway, Suite 203 Waldorf, MD 20601

ENGINEERING BY TRENCO A MiTek Affiliate
818 Soundside Road
Edenton, NC 27932

Job	Truss	Truss Type	Qty	Ply	KB Home 149.2115.D
149_2115_D	VA4	Valley	1	1	I49048140 Job Reference (optional)

84 Components (Dunn), Dunn, NC - 28334, 8.520 s Aug 27 2021 MiTek Industries, Inc. Wed Dec 1 15:18:57 2021 Page 1
ID:bNZHYySm82JAWDNgfw9uCLzLbIt-r7SkmbR1GdQ62eiWdb3mqyTfHHmMz2U6pSf4XlyDIGy

Scale = 1:25.7

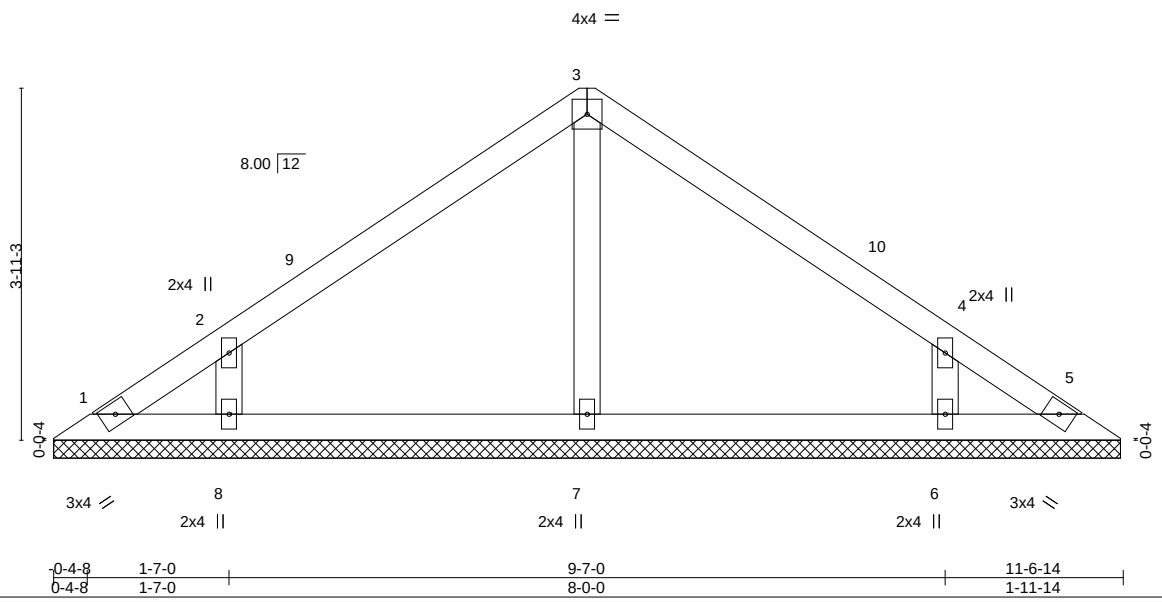

LOADING (psf)		SPACING-	2-0-0	CSI.		DEFL.	in	(loc)	l/defl	L/d	PLATES	GRIP
TCLL	20.0	Plate Grip DOL	1.15	TC	0.31	Vert(LL)	n/a	-	n/a	999	MT20	244/190
TCDL	10.0	Lumber DOL	1.15	BC	0.21	Vert(CT)	n/a	-	n/a	999		
BCLL	0.0 *	Rep Stress Incr	YES	WB	0.06	Horz(CT)	0.00	5	n/a	n/a		
BCDL	10.0	Code IRC2018/TPI2014		Matrix-S							Weight: 45 lb	FT = 20%

LUMBER-
TOP CHORD 2x4 SP No.3
BOT CHORD 2x4 SP No.3
WEBS 2x4 SP No.3
OTHERS 2x4 SP No.3

BRACING-
TOP CHORD Structural wood sheathing directly applied or 6-0-0 oc purlins.
BOT CHORD Rigid ceiling directly applied or 10-0-0 oc bracing.

REACTIONS. All bearings 11-11-0.
(lb) - Max Horz 1=-86(LC 10)
Max Uplift All uplift 100 lb or less at joint(s) 1, 5 except 6=-116(LC 13), 8=-117(LC 12)
Max Grav All reactions 250 lb or less at joint(s) 1, 5 except 7=268(LC 1), 6=308(LC 20), 8=308(LC 19)

FORCES. (lb) - Max. Comp./Max. Ten. - All forces 250 (lb) or less except when shown.

NOTES-
1) Unbalanced roof live loads have been considered for this design.
2) Wind: ASCE 7-16; Vult=130mph (3-second gust) Vasd=103mph; TCDL=6.0psf; BCDL=6.0psf; h=25ft; Cat. II; Exp B; Enclosed; MWFRS (envelope) gable end zone and C-C Exterior(2E) 0-0-14 to 3-0-14, Interior(1) 3-0-14 to 5-7-0, Exterior(2R) 5-7-0 to 8-7-0, Interior(1) 8-7-0 to 11-1-2 zone;C-C for members and forces & MWFRS for reactions shown; Lumber DOL=1.60 plate grip DOL=1.60
3) Gable requires continuous bottom chord bearing.
4) This truss has been designed for a 10.0 psf bottom chord live load nonconcurrent with any other live loads.
5) * This truss has been designed for a live load of 20.0psf on the bottom chord in all areas where a rectangle 3-6-0 tall by 2-0-0 wide will fit between the bottom chord and any other members.
6) One MTS12 Simpson Strong-Tie connectors recommended to connect truss to bearing walls due to UPLIFT at jt(s) 1 and 5. This connection is for uplift only and does not consider lateral forces.
7) N/A

8) This truss is designed in accordance with the 2018 International Residential Code sections R502.11.1 and R802.10.2 and referenced standard ANSI/TPI 1.

December 2,2021

WARNING - Verify design parameters and READ NOTES ON THIS AND INCLUDED MITEK REFERENCE PAGE MII-7473 rev. 5/19/2020 BEFORE USE.
Design valid for use only with MiTek® connectors. This design is based only upon parameters shown, and is for an individual building component, not a truss system. Before use, the building designer must verify the applicability of design parameters and properly incorporate this design into the overall building design. Bracing indicated is to prevent buckling of individual truss web and/or chord members only. Additional temporary and permanent bracing is always required for stability and to prevent collapse with possible personal injury and property damage. For general guidance regarding the fabrication, storage, delivery, erection and bracing of trusses and truss systems, see **ANSI/TPI1 Quality Criteria, DSB-89 and BCSI Building Component Safety Information** available from Truss Plate Institute, 2670 Crain Highway, Suite 203 Waldorf, MD 20601

ENGINEERING BY TRENCO A MiTek Affiliate
818 Soundside Road
Edenton, NC 27932

Job	Truss	Truss Type	Qty	Ply	KB Home 149.2115.D
149_2115_D	VA5	Valley	1	1	I49048141 Job Reference (optional)

84 Components (Dunn), Dunn, NC - 28334, 8.520 s Aug 27 2021 MiTek Industries, Inc. Wed Dec 1 15:18:57 2021 Page 1
ID:bNZHYySm82JAWDNgfw9uCLzLbIt-r7SkmbR1GdQ62eiWdb3mqyTbwHlJz2e6pSf4XlyDIGy

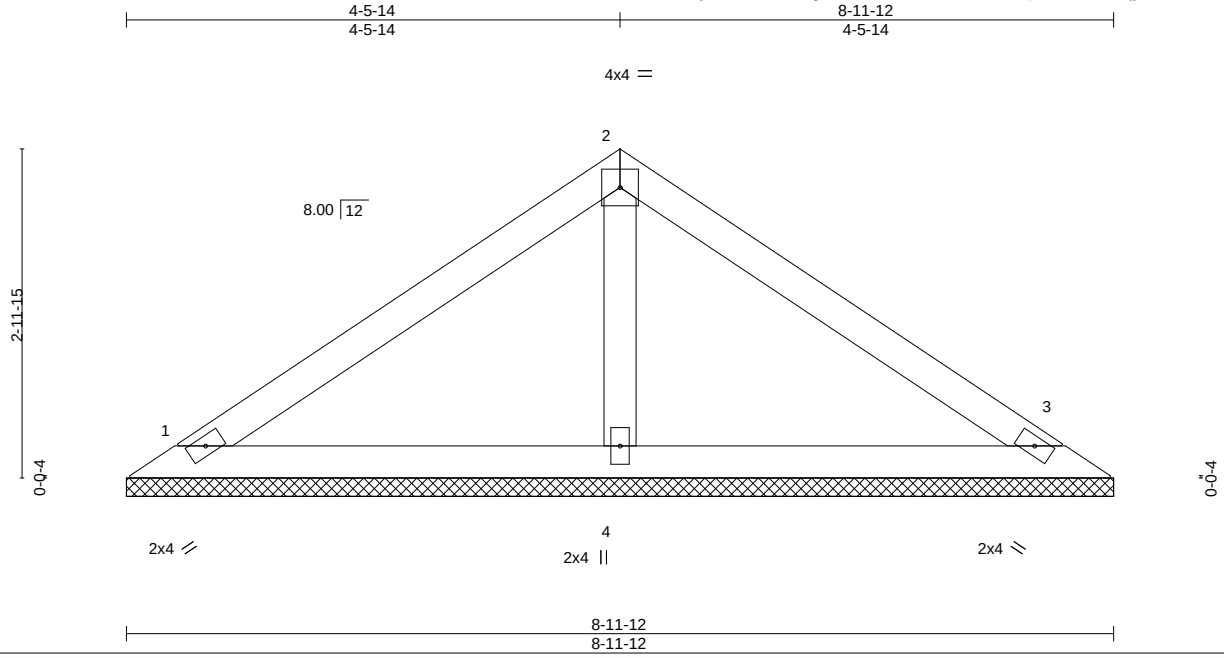

LOADING (psf)		SPACING- 2-0-0		CSI.		DEFL.	in	(loc)	l/defl	L/d	PLATES	GRIP
TCLL	20.0	Plate Grip DOL	1.15	TC	0.53	Vert(LL)	n/a	-	n/a	999	MT20	244/190
TCDL	10.0	Lumber DOL	1.15	BC	0.27	Vert(CT)	n/a	-	n/a	999		
BCLL	0.0 *	Rep Stress Incr	YES	WB	0.05	Horz(CT)	0.00	3	n/a	n/a		
BCDL	10.0	Code IRC2018/TPI2014		Matrix-P							Weight: 31 lb	FT = 20%

LUMBER-
TOP CHORD 2x4 SP No.3
BOT CHORD 2x4 SP No.3
OTHERS 2x4 SP No.3

BRACING-
TOP CHORD Structural wood sheathing directly applied or 6-0-0 oc purlins.
BOT CHORD Rigid ceiling directly applied or 10-0-0 oc bracing.

REACTIONS. (size) 1=8-11-12, 3=8-11-12, 4=8-11-12
Max Horz 1=63(LC 11)
Max Uplift 1=-34(LC 12), 3=-42(LC 13)
Max Grav 1=172(LC 1), 3=172(LC 1), 4=298(LC 1)

FORCES. (lb) - Max. Comp./Max. Ten. - All forces 250 (lb) or less except when shown.

NOTES-
1) Unbalanced roof live loads have been considered for this design.
2) Wind: ASCE 7-16; Vult=130mph (3-second gust) Vasd=103mph; TCDL=6.0psf; BCDL=6.0psf; h=25ft; Cat. II; Exp B; Enclosed; MWFRS (envelope) gable end zone and C-C Exterior(2E) 0-5-12 to 3-5-12, Interior(1) 3-5-12 to 4-5-14, Exterior(2R) 4-5-14 to 7-5-14 , Interior(1) 7-5-14 to 8-6-0 zone;C-C for members and forces & MWFRS for reactions shown; Lumber DOL=1.60 plate grip DOL=1.60
3) Gable requires continuous bottom chord bearing.
4) This truss has been designed for a 10.0 psf bottom chord live load nonconcurrent with any other live loads.
5) * This truss has been designed for a live load of 20.0psf on the bottom chord in all areas where a rectangle 3-6-0 tall by 2-0-0 wide will fit between the bottom chord and any other members.
6) One MTS12 Simpson Strong-Tie connectors recommended to connect truss to bearing walls due to UPLIFT at jt(s) 1 and 3. This connection is for uplift only and does not consider lateral forces.
7) This truss is designed in accordance with the 2018 International Residential Code sections R502.11.1 and R802.10.2 and referenced standard ANSI/TPI 1.

December 2,2021

WARNING - Verify design parameters and READ NOTES ON THIS AND INCLUDED MITEK REFERENCE PAGE MII-7473 rev. 5/19/2020 BEFORE USE.
Design valid for use only with MiTek® connectors. This design is based only upon parameters shown, and is for an individual building component, not a truss system. Before use, the building designer must verify the applicability of design parameters and properly incorporate this design into the overall building design. Bracing indicated is to prevent buckling of individual truss web and/or chord members only. Additional temporary and permanent bracing is always required for stability and to prevent collapse with possible personal injury and property damage. For general guidance regarding the fabrication, storage, delivery, erection and bracing of trusses and truss systems, see **ANSI/TPI1 Quality Criteria, DSB-89 and BCSI Building Component Safety Information** available from Truss Plate Institute, 2670 Crain Highway, Suite 203 Waldorf, MD 20601

ENGINEERING BY TRENCO A MiTek Affiliate
818 Soundside Road
Edenton, NC 27932

Job	Truss	Truss Type	Qty	Ply	KB Home 149.2115.D
149_2115_D	VA6	Valley	1	1	I49048142 Job Reference (optional)

84 Components (Dunn), Dunn, NC - 28334, 8.520 s Aug 27 2021 MiTek Industries, Inc. Wed Dec 1 15:18:58 2021 Page 1
ID:bNZHYySm82JAWDNgfw9uCLzLbIt-JJ06zxSf1wYzfoHiBJa?M9?svh1LiUbG26Pd3ByDIGx

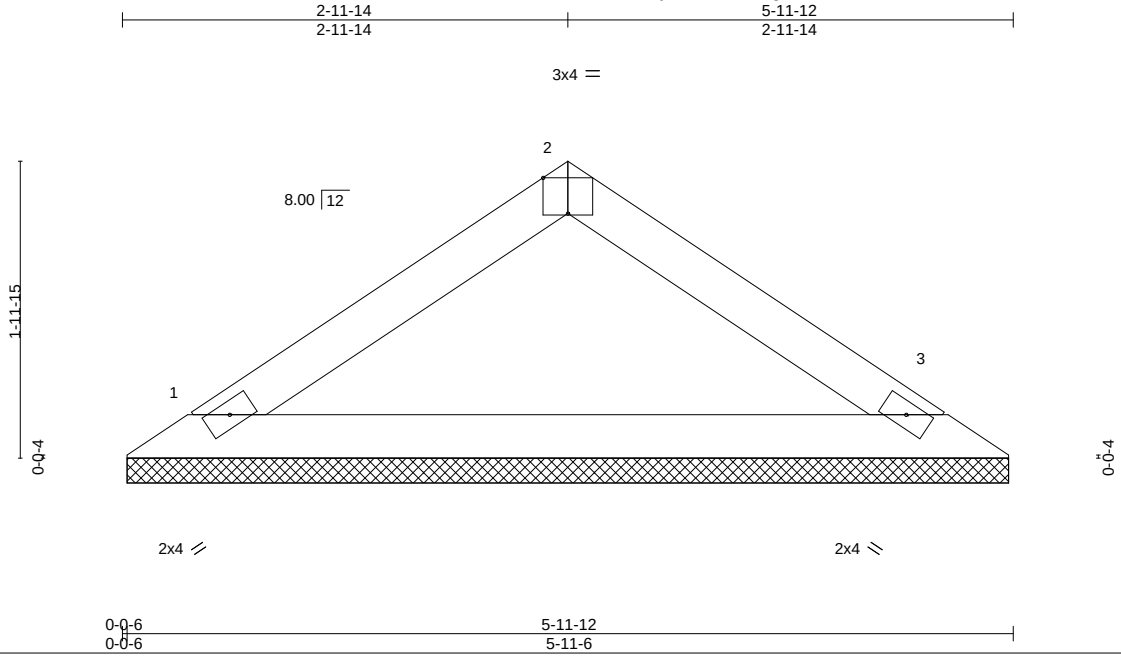

Plate Offsets (X,Y)-- [2:0-2-0,Edge]

LOADING (psf)		SPACING- 2-0-0		CSI.		DEFL.	in	(loc)	l/defl	L/d	PLATES	GRIP
TCLL	20.0	Plate Grip DOL	1.15	TC	0.19	Vert(LL)	n/a	-	n/a	999	MT20	244/190
TCDL	10.0	Lumber DOL	1.15	BC	0.54	Vert(CT)	n/a	-	n/a	999		
BCLL	0.0 *	Rep Stress Incr	YES	WB	0.00	Horz(CT)	0.00	3	n/a	n/a		
BCDL	10.0	Code IRC2018/TPI2014		Matrix-P							Weight: 18 lb	FT = 20%

LUMBER-
TOP CHORD 2x4 SP No.3
BOT CHORD 2x4 SP No.3

BRACING-
TOP CHORD Structural wood sheathing directly applied or 5-11-12 oc purlins.
BOT CHORD Rigid ceiling directly applied or 10-0-0 oc bracing.

REACTIONS. (size) 1=5-11-0, 3=5-11-0
Max Horz 1=-39(LC 8)
Max Uplift 1=-17(LC 12), 3=-17(LC 13)
Max Grav 1=201(LC 1), 3=201(LC 1)

FORCES. (lb) - Max. Comp./Max. Ten. - All forces 250 (lb) or less except when shown.

NOTES-
1) Unbalanced roof live loads have been considered for this design.
2) Wind: ASCE 7-16; Vult=130mph (3-second gust) Vasd=103mph; TCDL=6.0psf; BCDL=6.0psf; h=25ft; Cat. II; Exp B; Enclosed; MWFRS (envelope) gable end zone and C-C Exterior(2E) zone;C-C for members and forces & MWFRS for reactions shown; Lumber DOL=1.60 plate grip DOL=1.60
3) Gable requires continuous bottom chord bearing.
4) This truss has been designed for a 10.0 psf bottom chord live load nonconcurrent with any other live loads.
5) * This truss has been designed for a live load of 20.0psf on the bottom chord in all areas where a rectangle 3-6-0 tall by 2-0-0 wide will fit between the bottom chord and any other members.
6) One MTS12 Simpson Strong-Tie connectors recommended to connect truss to bearing walls due to UPLIFT at jt(s) 1 and 3. This connection is for uplift only and does not consider lateral forces.
7) This truss is designed in accordance with the 2018 International Residential Code sections R502.11.1 and R802.10.2 and referenced standard ANSI/TPI 1.

December 2,2021

WARNING - Verify design parameters and READ NOTES ON THIS AND INCLUDED MITEK REFERENCE PAGE MII-7473 rev. 5/19/2020 BEFORE USE.
Design valid for use only with MiTek® connectors. This design is based only upon parameters shown, and is for an individual building component, not a truss system. Before use, the building designer must verify the applicability of design parameters and properly incorporate this design into the overall building design. Bracing indicated is to prevent buckling of individual truss web and/or chord members only. Additional temporary and permanent bracing is always required for stability and to prevent collapse with possible personal injury and property damage. For general guidance regarding the fabrication, storage, delivery, erection and bracing of trusses and truss systems, see **ANSI/TPI1 Quality Criteria, DSB-89 and BCSI Building Component Safety Information** available from Truss Plate Institute, 2670 Crain Highway, Suite 203 Waldorf, MD 20601

ENGINEERING BY TRENCO A MiTek Affiliate
818 Soundside Road
Edenton, NC 27932

Job	Truss	Truss Type	Qty	Ply	KB Home 149.2115.D
149_2115_D	VA7	Valley	1	1	I49048143 Job Reference (optional)

84 Components (Dunn), Dunn, NC - 28334, 8.520 s Aug 27 2021 MiTek Industries, Inc. Wed Dec 1 15:18:59 2021 Page 1
ID:bNZHYySm82JAWDNgfw9uCLzLbIt-nVZVAHSHoEgqHyrvl05EvNY355UrRxrPHm8AcdyDIGw

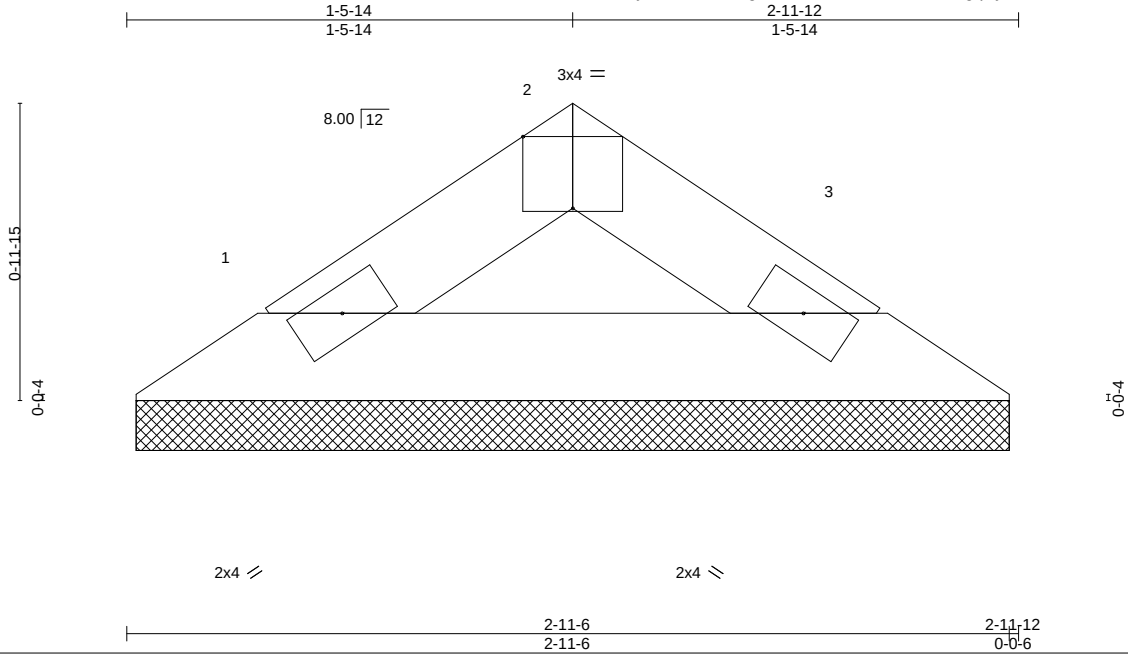

Plate Offsets (X,Y)-- [2:0-2-0,Edge]

LOADING (psf)		SPACING- 2-0-0		CSI.		DEFL.	in	(loc)	l/defl	L/d	PLATES	GRIP
TCLL	20.0	Plate Grip DOL	1.15	TC	0.03	Vert(LL)	n/a	-	n/a	999	MT20	244/190
TCDL	10.0	Lumber DOL	1.15	BC	0.08	Vert(CT)	n/a	-	n/a	999		
BCLL	0.0 *	Rep Stress Incr	YES	WB	0.00	Horz(CT)	0.00	3	n/a	n/a		
BCDL	10.0	Code IRC2018/TPI2014		Matrix-P							Weight: 8 lb	FT = 20%

LUMBER-
TOP CHORD 2x4 SP No.3
BOT CHORD 2x4 SP No.3

BRACING-
TOP CHORD Structural wood sheathing directly applied or 2-11-12 oc purlins.
BOT CHORD Rigid ceiling directly applied or 10-0-0 oc bracing.

REACTIONS. (size) 1=2-11-0, 3=2-11-0
Max Horz 1=16(LC 11)
Max Uplift 1=-7(LC 12), 3=-7(LC 13)
Max Grav 1=81(LC 1), 3=81(LC 1)

FORCES. (lb) - Max. Comp./Max. Ten. - All forces 250 (lb) or less except when shown.

NOTES-
1) Unbalanced roof live loads have been considered for this design.
2) Wind: ASCE 7-16; Vult=130mph (3-second gust) Vasd=103mph; TCDL=6.0psf; BCDL=6.0psf; h=25ft; Cat. II; Exp B; Enclosed; MWFRS (envelope) gable end zone and C-C Exterior(2E) zone;C-C for members and forces & MWFRS for reactions shown; Lumber DOL=1.60 plate grip DOL=1.60
3) Gable requires continuous bottom chord bearing.
4) This truss has been designed for a 10.0 psf bottom chord live load nonconcurrent with any other live loads.
5) * This truss has been designed for a live load of 20.0psf on the bottom chord in all areas where a rectangle 3-6-0 tall by 2-0-0 wide will fit between the bottom chord and any other members.
6) One MTS12 Simpson Strong-Tie connectors recommended to connect truss to bearing walls due to UPLIFT at jt(s) 1 and 3. This connection is for uplift only and does not consider lateral forces.
7) This truss is designed in accordance with the 2018 International Residential Code sections R502.11.1 and R802.10.2 and referenced standard ANSI/TPI 1.

December 2,2021

WARNING - Verify design parameters and READ NOTES ON THIS AND INCLUDED MITEK REFERENCE PAGE MII-7473 rev. 5/19/2020 BEFORE USE.
Design valid for use only with MiTek® connectors. This design is based only upon parameters shown, and is for an individual building component, not a truss system. Before use, the building designer must verify the applicability of design parameters and properly incorporate this design into the overall building design. Bracing indicated is to prevent buckling of individual truss web and/or chord members only. Additional temporary and permanent bracing is always required for stability and to prevent collapse with possible personal injury and property damage. For general guidance regarding the fabrication, storage, delivery, erection and bracing of trusses and truss systems, see **ANSI/TPI1 Quality Criteria, DSB-89 and BCSI Building Component Safety Information** available from Truss Plate Institute, 2670 Crain Highway, Suite 203 Waldorf, MD 20601

ENGINEERING BY TRENCO A MiTek Affiliate
818 Soundside Road
Edenton, NC 27932

Job	Truss	Truss Type	Qty	Ply	KB Home 149.2115.D
149_2115_D	VB1	Valley	1	1	I49048144 Job Reference (optional)

84 Components (Dunn), Dunn, NC - 28334, 8.520 s Aug 27 2021 MiTek Industries, Inc. Wed Dec 1 15:19:00 2021 Page 1
ID:bNZHYySm82JAWDNgfw9uCLzLbIt-Fi7tOdTvZYohv5Q5JkcTRa5AiVpRAN0ZWQuk84yDIGv

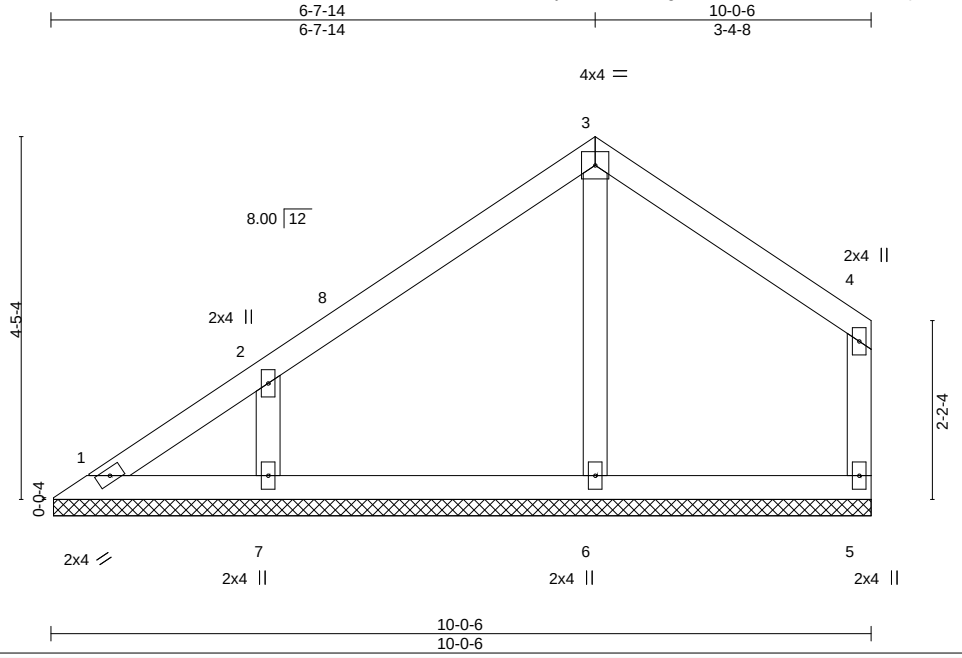

LOADING (psf)		SPACING-	2-0-0	CSI.		DEFL.	in	(loc)	l/defl	L/d	PLATES	GRIP
TCLL	20.0	Plate Grip DOL	1.15	TC	0.30	Vert(LL)	n/a	-	n/a	999	MT20	244/190
TCDL	10.0	Lumber DOL	1.15	BC	0.18	Vert(CT)	n/a	-	n/a	999		
BCLL	0.0 *	Rep Stress Incr	YES	WB	0.07	Horz(CT)	0.00	5	n/a	n/a		
BCDL	10.0	Code IRC2018/TPI2014		Matrix-S							Weight: 42 lb	FT = 20%

LUMBER-
TOP CHORD 2x4 SP No.3
BOT CHORD 2x4 SP No.3
WEBS 2x4 SP No.3
OTHERS 2x4 SP No.3

BRACING-
TOP CHORD Structural wood sheathing directly applied or 6-0-0 oc purlins, except end verticals.
BOT CHORD Rigid ceiling directly applied or 10-0-0 oc bracing.

REACTIONS. All bearings 10-0-0.
(lb) - Max Horz 1=106(LC 12)
Max Uplift All uplift 100 lb or less at joint(s) 1, 5 except 7=-117(LC 12)
Max Grav All reactions 250 lb or less at joint(s) 1, 5 except 6=273(LC 19), 7=319(LC 19)

FORCES. (lb) - Max. Comp./Max. Ten. - All forces 250 (lb) or less except when shown.

NOTES-
1) Unbalanced roof live loads have been considered for this design.
2) Wind: ASCE 7-16; Vult=130mph (3-second gust) Vasd=103mph; TCDL=6.0psf; BCDL=6.0psf; h=25ft; Cat. II; Exp B; Enclosed; MWFRS (envelope) gable end zone and C-C Exterior(2E) 0-5-12 to 3-5-12, Interior(1) 3-5-12 to 6-7-14, Exterior(2E) 6-7-14 to 9-10-10 zone;C-C for members and forces & MWFRS for reactions shown; Lumber DOL=1.60 plate grip DOL=1.60
3) Gable requires continuous bottom chord bearing.
4) This truss has been designed for a 10.0 psf bottom chord live load nonconcurrent with any other live loads.
5) * This truss has been designed for a live load of 20.0psf on the bottom chord in all areas where a rectangle 3-6-0 tall by 2-0-0 wide will fit between the bottom chord and any other members.
6) One MTS12 Simpson Strong-Tie connectors recommended to connect truss to bearing walls due to UPLIFT at jt(s) 1. This connection is for uplift only and does not consider lateral forces.
7) N/A

8) This truss is designed in accordance with the 2018 International Residential Code sections R502.11.1 and R802.10.2 and referenced standard ANSI/TPI 1.

December 2,2021

WARNING - Verify design parameters and READ NOTES ON THIS AND INCLUDED MITEK REFERENCE PAGE MII-7473 rev. 5/19/2020 BEFORE USE.
Design valid for use only with MiTek® connectors. This design is based only upon parameters shown, and is for an individual building component, not a truss system. Before use, the building designer must verify the applicability of design parameters and properly incorporate this design into the overall building design. Bracing indicated is to prevent buckling of individual truss web and/or chord members only. Additional temporary and permanent bracing is always required for stability and to prevent collapse with possible personal injury and property damage. For general guidance regarding the fabrication, storage, delivery, erection and bracing of trusses and truss systems, see **ANSI/TPI1 Quality Criteria, DSB-89 and BCSI Building Component Safety Information** available from Truss Plate Institute, 2670 Crain Highway, Suite 203 Waldorf, MD 20601

ENGINEERING BY TRENCO A MiTek Affiliate
818 Soundside Road
Edenton, NC 27932

Job	Truss	Truss Type	Qty	Ply	KB Home 149.2115.D
149_2115_D	VB2	Valley	1	1	I49048145 Job Reference (optional)

84 Components (Dunn), Dunn, NC - 28334, 8.520 s Aug 27 2021 MiTek Industries, Inc. Wed Dec 1 15:19:00 2021 Page 1
ID:bNZHYySm82JAWDNgfw9uCLzLbIt-Fi7tOdTvZYohv5Q5JkcTRa53xVnaAO9ZWQuk84yDIGv

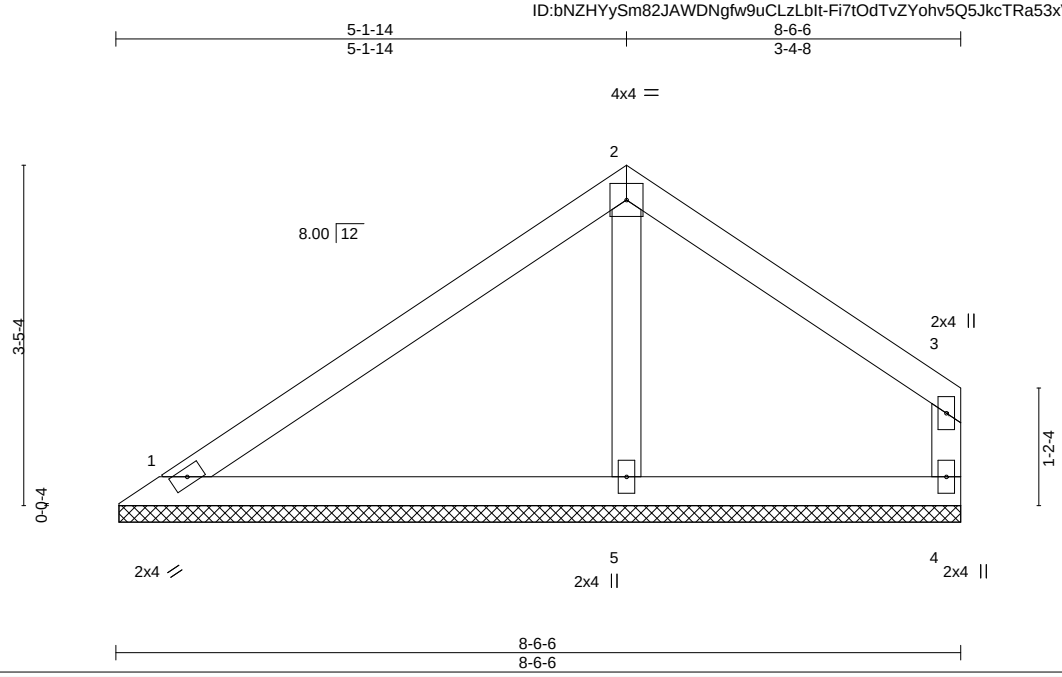

LOADING (psf)		SPACING- 2-0-0		CSI.		DEFL.	in	(loc)	l/defl	L/d	PLATES	GRIP
TCLL	20.0	Plate Grip DOL	1.15	TC	0.73	Vert(LL)	n/a	-	n/a	999	MT20	244/190
TCDL	10.0	Lumber DOL	1.15	BC	0.30	Vert(CT)	n/a	-	n/a	999		
BCLL	0.0 *	Rep Stress Incr	YES	WB	0.06	Horz(CT)	0.00		n/a	n/a		
BCDL	10.0	Code IRC2018/TPI2014		Matrix-P							Weight: 33 lb	FT = 20%

LUMBER-
TOP CHORD 2x4 SP No.3
BOT CHORD 2x4 SP No.3
WEBS 2x4 SP No.3
OTHERS 2x4 SP No.3

BRACING-
TOP CHORD Structural wood sheathing directly applied or 8-6-6 oc purlins, except end verticals.
BOT CHORD Rigid ceiling directly applied or 10-0-0 oc bracing.

REACTIONS. (size) 1=8-6-0, 4=8-6-0, 5=8-6-0
Max Horz 1=71(LC 9)
Max Uplift 1=-29(LC 13), 4=-55(LC 13), 5=-4(LC 12)
Max Grav 1=178(LC 1), 4=123(LC 20), 5=339(LC 1)

FORCES. (lb) - Max. Comp./Max. Ten. - All forces 250 (lb) or less except when shown.

NOTES-
1) Unbalanced roof live loads have been considered for this design.
2) Wind: ASCE 7-16; Vult=130mph (3-second gust) Vasd=103mph; TCDL=6.0psf; BCDL=6.0psf; h=25ft; Cat. II; Exp B; Enclosed; MWFRS (envelope) gable end zone and C-C Exterior(2E) 0-5-12 to 3-5-12, Interior(1) 3-5-12 to 5-1-14, Exterior(2E) 5-1-14 to 8-4-10 zone;C-C for members and forces & MWFRS for reactions shown; Lumber DOL=1.60 plate grip DOL=1.60
3) Gable requires continuous bottom chord bearing.
4) This truss has been designed for a 10.0 psf bottom chord live load nonconcurrent with any other live loads.
5) * This truss has been designed for a live load of 20.0psf on the bottom chord in all areas where a rectangle 3-6-0 tall by 2-0-0 wide will fit between the bottom chord and any other members.
6) One MTS12 Simpson Strong-Tie connectors recommended to connect truss to bearing walls due to UPLIFT at jt(s) 1. This connection is for uplift only and does not consider lateral forces.
7) N/A

8) This truss is designed in accordance with the 2018 International Residential Code sections R502.11.1 and R802.10.2 and referenced standard ANSI/TPI 1.

December 2,2021

WARNING - Verify design parameters and READ NOTES ON THIS AND INCLUDED MITEK REFERENCE PAGE MII-7473 rev. 5/19/2020 BEFORE USE.
Design valid for use only with MiTek® connectors. This design is based only upon parameters shown, and is for an individual building component, not a truss system. Before use, the building designer must verify the applicability of design parameters and properly incorporate this design into the overall building design. Bracing indicated is to prevent buckling of individual truss web and/or chord members only. Additional temporary and permanent bracing is always required for stability and to prevent collapse with possible personal injury and property damage. For general guidance regarding the fabrication, storage, delivery, erection and bracing of trusses and truss systems, see **ANSI/TPI1 Quality Criteria, DSB-89 and BCSI Building Component Safety Information** available from Truss Plate Institute, 2670 Crain Highway, Suite 203 Waldorf, MD 20601

ENGINEERING BY TRENCO A MiTek Affiliate
818 Soundside Road
Edenton, NC 27932

Job	Truss	Truss Type	Qty	Ply	KB Home 149.2115.D
149_2115_D	VB3	Valley	1	1	I49048146 Job Reference (optional)

84 Components (Dunn), Dunn, NC - 28334, 8.520 s Aug 27 2021 MiTek Industries, Inc. Wed Dec 1 15:19:01 2021 Page 1
ID:bNZHYySm82JAWDNgfw9uCLzLbIt-juhFbyUXKrwYWF?HsR7i_odLAu9rvrqik4dHgWyDIGu

3-7-14 | 7-0-6
3-7-14 | 3-4-8

Scale = 1:17.8

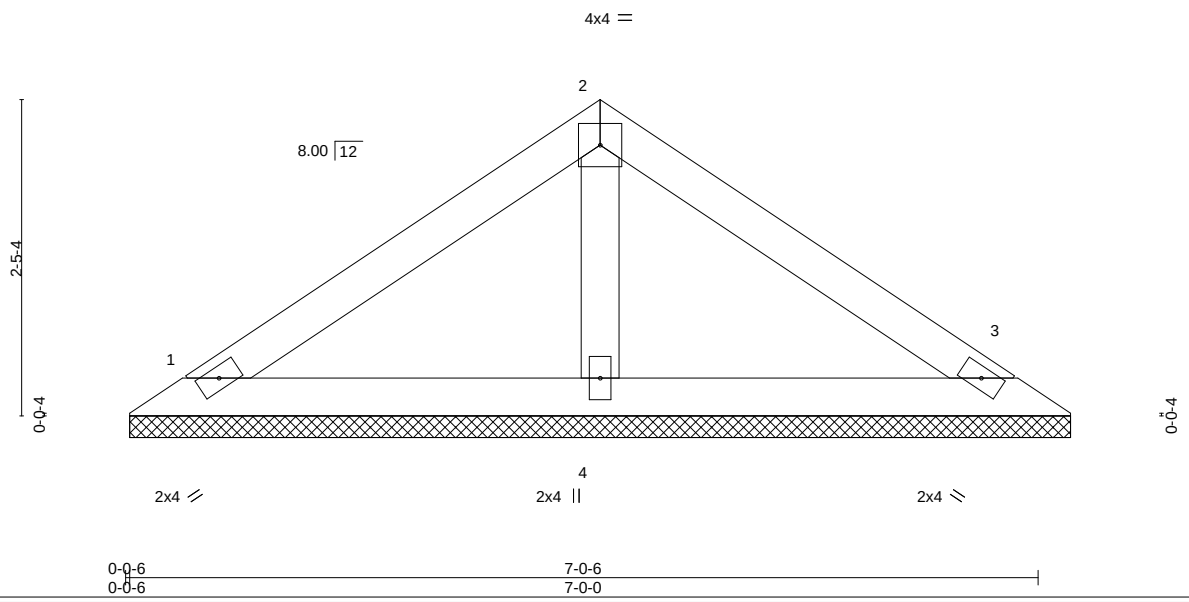

LOADING (psf)		SPACING- 2-0-0		CSI.		DEFL.	in	(loc)	l/defl	L/d	PLATES	GRIP
TCLL	20.0	Plate Grip DOL	1.15	TC	0.32	Vert(LL)	n/a	-	n/a	999	MT20	244/190
TCDL	10.0	Lumber DOL	1.15	BC	0.17	Vert(CT)	n/a	-	n/a	999		
BCLL	0.0 *	Rep Stress Incr	YES	WB	0.03	Horz(CT)	0.00	3	n/a	n/a		
BCDL	10.0	Code IRC2018/TPI2014		Matrix-P							Weight: 25 lb	FT = 20%

LUMBER-
TOP CHORD 2x4 SP No.3
BOT CHORD 2x4 SP No.3
OTHERS 2x4 SP No.3

BRACING-
TOP CHORD Structural wood sheathing directly applied or 6-0-0 oc purlins.
BOT CHORD Rigid ceiling directly applied or 10-0-0 oc bracing.

REACTIONS. (size) 1=7-3-0, 3=7-3-0, 4=7-3-0
Max Horz 1=50(LC 11)
Max Uplift 1=-27(LC 12), 3=-33(LC 13)
Max Grav 1=136(LC 1), 3=136(LC 1), 4=236(LC 1)

FORCES. (lb) - Max. Comp./Max. Ten. - All forces 250 (lb) or less except when shown.

NOTES-
1) Unbalanced roof live loads have been considered for this design.
2) Wind: ASCE 7-16; Vult=130mph (3-second gust) Vasd=103mph; TCDL=6.0psf; BCDL=6.0psf; h=25ft; Cat. II; Exp B; Enclosed; MWFRS (envelope) gable end zone and C-C Exterior(2E) zone;C-C for members and forces & MWFRS for reactions shown; Lumber DOL=1.60 plate grip DOL=1.60
3) Gable requires continuous bottom chord bearing.
4) This truss has been designed for a 10.0 psf bottom chord live load nonconcurrent with any other live loads.
5) * This truss has been designed for a live load of 20.0psf on the bottom chord in all areas where a rectangle 3-6-0 tall by 2-0-0 wide will fit between the bottom chord and any other members.
6) One MTS12 Simpson Strong-Tie connectors recommended to connect truss to bearing walls due to UPLIFT at jt(s) 1 and 3. This connection is for uplift only and does not consider lateral forces.
7) This truss is designed in accordance with the 2018 International Residential Code sections R502.11.1 and R802.10.2 and referenced standard ANSI/TPI 1.

December 2,2021

WARNING - Verify design parameters and READ NOTES ON THIS AND INCLUDED MITEK REFERENCE PAGE MII-7473 rev. 5/19/2020 BEFORE USE.
Design valid for use only with MiTek® connectors. This design is based only upon parameters shown, and is for an individual building component, not a truss system. Before use, the building designer must verify the applicability of design parameters and properly incorporate this design into the overall building design. Bracing indicated is to prevent buckling of individual truss web and/or chord members only. Additional temporary and permanent bracing is always required for stability and to prevent collapse with possible personal injury and property damage. For general guidance regarding the fabrication, storage, delivery, erection and bracing of trusses and truss systems, see **ANSI/TPI1 Quality Criteria, DSB-89 and BCSI Building Component Safety Information** available from Truss Plate Institute, 2670 Crain Highway, Suite 203 Waldorf, MD 20601

ENGINEERING BY TRENCO A MiTek Affiliate
818 Soundside Road
Edenton, NC 27932

Job	Truss	Truss Type	Qty	Ply	KB Home 149.2115.D
149_2115_D	VB4	Valley	1	1	I49048147 Job Reference (optional)

84 Components (Dunn), Dunn, NC - 28334, 8.520 s Aug 27 2021 MiTek Industries, Inc. Wed Dec 1 15:19:02 2021 Page 1
ID:bNZHYySm82JAWDNgfw9uCLzLbIt-C4FdpIV9592P8PaUQ9fxX?AYVITBeIbszkNrCyyDIGt

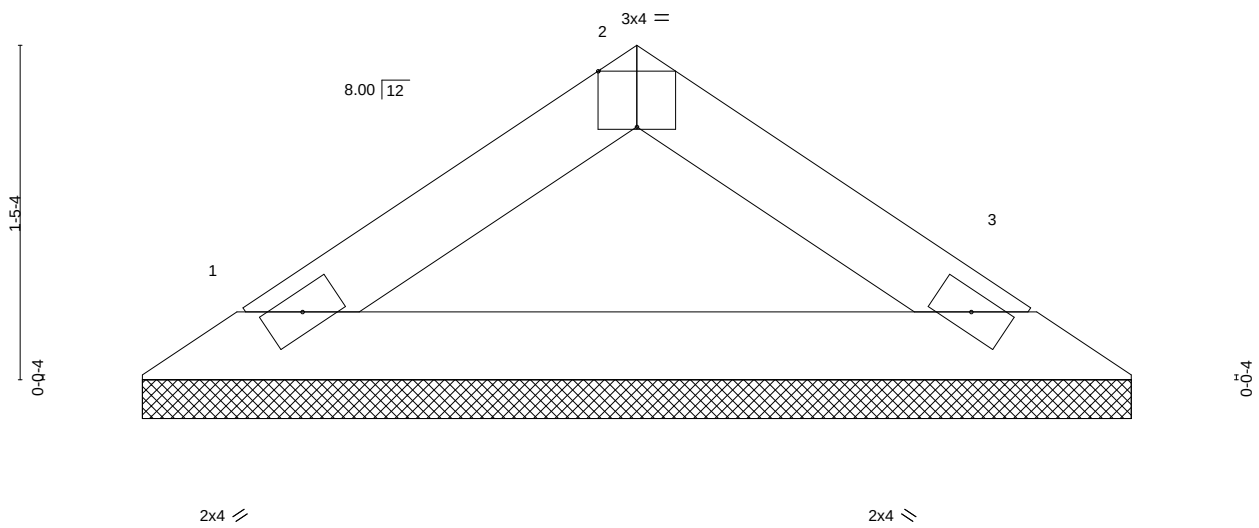

Plate Offsets (X,Y)-- [2:0-2-0,Edge]

LOADING (psf)		SPACING- 2-0-0		CSI.		DEFL. in (loc) l/defl L/d		PLATES	GRIP
TCLL	20.0	Plate Grip DOL	1.15	TC	0.09	Vert(LL) n/a - n/a 999		MT20	244/190
TCDL	10.0	Lumber DOL	1.15	BC	0.23	Vert(CT) n/a - n/a 999			
BCLL	0.0 *	Rep Stress Incr	YES	WB	0.00	Horz(CT) 0.00 3 n/a n/a			
BCDL	10.0	Code IRC2018/TPI2014		Matrix-P				Weight: 12 lb	FT = 20%

LUMBER-
TOP CHORD 2x4 SP No.3
BOT CHORD 2x4 SP No.3

BRACING-
TOP CHORD Structural wood sheathing directly applied or 4-3-12 oc purlins.
BOT CHORD Rigid ceiling directly applied or 10-0-0 oc bracing.

REACTIONS. (size) 1=4-3-0, 3=4-3-0
Max Horz 1=26(LC 9)
Max Uplift 1=-12(LC 12), 3=-12(LC 13)
Max Grav 1=134(LC 1), 3=134(LC 1)

FORCES. (lb) - Max. Comp./Max. Ten. - All forces 250 (lb) or less except when shown.

NOTES-
1) Unbalanced roof live loads have been considered for this design.
2) Wind: ASCE 7-16; Vult=130mph (3-second gust) Vasd=103mph; TCDL=6.0psf; BCDL=6.0psf; h=25ft; Cat. II; Exp B; Enclosed; MWFRS (envelope) gable end zone and C-C Exterior(2E) zone;C-C for members and forces & MWFRS for reactions shown; Lumber DOL=1.60 plate grip DOL=1.60
3) Gable requires continuous bottom chord bearing.
4) This truss has been designed for a 10.0 psf bottom chord live load nonconcurrent with any other live loads.
5) * This truss has been designed for a live load of 20.0psf on the bottom chord in all areas where a rectangle 3-6-0 tall by 2-0-0 wide will fit between the bottom chord and any other members.
6) One MTS12 Simpson Strong-Tie connectors recommended to connect truss to bearing walls due to UPLIFT at jt(s) 1 and 3. This connection is for uplift only and does not consider lateral forces.
7) This truss is designed in accordance with the 2018 International Residential Code sections R502.11.1 and R802.10.2 and referenced standard ANSI/TPI 1.

December 2,2021

WARNING - Verify design parameters and READ NOTES ON THIS AND INCLUDED MITEK REFERENCE PAGE MII-7473 rev. 5/19/2020 BEFORE USE.
Design valid for use only with MiTek® connectors. This design is based only upon parameters shown, and is for an individual building component, not a truss system. Before use, the building designer must verify the applicability of design parameters and properly incorporate this design into the overall building design. Bracing indicated is to prevent buckling of individual truss web and/or chord members only. Additional temporary and permanent bracing is always required for stability and to prevent collapse with possible personal injury and property damage. For general guidance regarding the fabrication, storage, delivery, erection and bracing of trusses and truss systems, see **ANSI/TPI1 Quality Criteria, DSB-89 and BCSI Building Component Safety Information** available from Truss Plate Institute, 2670 Crain Highway, Suite 203 Waldorf, MD 20601

ENGINEERING BY TRENCO A MiTek Affiliate
818 Soundside Road
Edenton, NC 27932

Symbols

PLATE LOCATION AND ORIENTATION

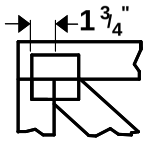

Center plate on joint unless x, y offsets are indicated. Dimensions are in ft-in-sixteenths. Apply plates to both sides of truss and fully embed teeth.

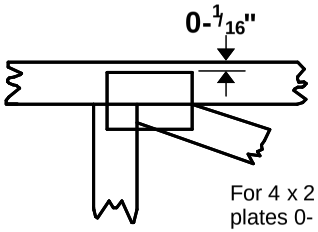

For 4 x 2 orientation, locate plates 0- 1/16" from outside edge of truss.

This symbol indicates the required direction of slots in connector plates.

*** Plate location details available in MiTek 20/20 software or upon request.**

PLATE SIZE

4 x 4

The first dimension is the plate width measured perpendicular to slots. Second dimension is the length parallel to slots.

LATERAL BRACING LOCATION

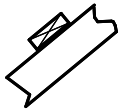

Indicated by symbol shown and/or by text in the bracing section of the output. Use T or I bracing if indicated.

BEARING

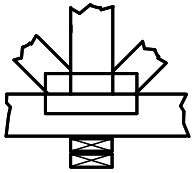

Indicates location where bearings (supports) occur. Icons vary but reaction section indicates joint number where bearings occur. Min size shown is for crushing only.

Industry Standards:

ANSI/TPI1: National Design Specification for Metal Plate Connected Wood Truss Construction.
DSB-89: Design Standard for Bracing.
BCSI: Building Component Safety Information, Guide to Good Practice for Handling, Installing & Bracing of Metal Plate Connected Wood Trusses.

Numbering System

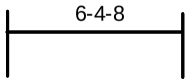

dimensions shown in ft-in-sixteenths
(Drawings not to scale)

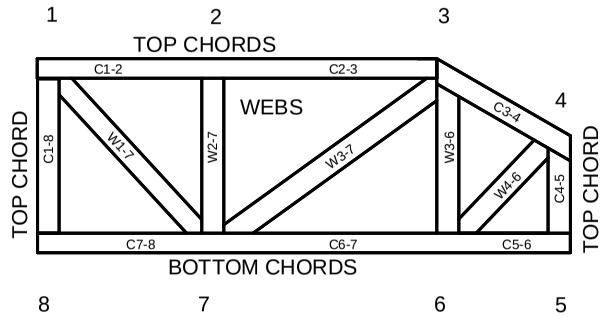

JOINTS ARE GENERALLY NUMBERED/LETTERED CLOCKWISE AROUND THE TRUSS STARTING AT THE JOINT FARTHEST TO THE LEFT.

CHORDS AND WEBS ARE IDENTIFIED BY END JOINT NUMBERS/LETTERS.

PRODUCT CODE APPROVALS

ICC-ES Reports:

ESR-1311, ESR-1352, ESR1988
ER-3907, ESR-2362, ESR-1397, ESR-3282

Trusses are designed for wind loads in the plane of the truss unless otherwise shown.

Lumber design values are in accordance with ANSI/TPI 1 section 6.3 These truss designs rely on lumber values established by others.

© 2012 MiTek® All Rights Reserved

MiTek

ENGINEERING BY TRENCO
A MiTek Affiliate

General Safety Notes

Failure to Follow Could Cause Property Damage or Personal Injury

1. Additional stability bracing for truss system, e.g. diagonal or X-bracing, is always required. See BCSI.
2. Truss bracing must be designed by an engineer. For wide truss spacing, individual lateral braces themselves may require bracing, or alternative Tor I bracing should be considered.
3. Never exceed the design loading shown and never stack materials on inadequately braced trusses.
4. Provide copies of this truss design to the building designer, erection supervisor, property owner and all other interested parties.
5. Cut members to bear tightly against each other.
6. Place plates on each face of truss at each joint and embed fully. Knots and wane at joint locations are regulated by ANSI/TPI 1.
7. Design assumes trusses will be suitably protected from the environment in accord with ANSI/TPI 1.
8. Unless otherwise noted, moisture content of lumber shall not exceed 19% at time of fabrication.
9. Unless expressly noted, this design is not applicable for use with fire retardant, preservative treated, or green lumber.
10. Camber is a non-structural consideration and is the responsibility of truss fabricator. General practice is to camber for dead load deflection.
11. Plate type, size, orientation and location dimensions indicated are minimum plating requirements.
12. Lumber used shall be of the species and size, and in all respects, equal to or better than that specified.
13. Top chords must be sheathed or purlins provided at spacing indicated on design.
14. Bottom chords require lateral bracing at 10 ft. spacing, or less, if no ceiling is installed, unless otherwise noted.
15. Connections not shown are the responsibility of others.
16. Do not cut or alter truss member or plate without prior approval of an engineer.
17. Install and load vertically unless indicated otherwise.
18. Use of green or treated lumber may pose unacceptable environmental, health or performance risks. Consult with project engineer before use.
19. Review all portions of this design (front, back, words and pictures) before use. Reviewing pictures alone is not sufficient.
20. Design assumes manufacture in accordance with ANSI/TPI 1 Quality Criteria.
21. The design does not take into account any dynamic or other loads other than those expressly stated.