ENGINEERING BY TRENCO
A MiTek Affiliate

Trenco
818 Soundside Rd
Edenton, NC 27932

Re: 150_1910_D
KB Home 150.1910.D

The truss drawing(s) referenced below have been prepared by Truss Engineering Co. under my direct supervision based on the parameters provided by 84 Components - #2383.

Pages or sheets covered by this seal: I43742692 thru I43742727

My license renewal date for the state of North Carolina is December 31, 2020.

North Carolina COA: C-0844

NORTH CAROLINA PROFESSIONAL SEAL 044925 ENGINEER SCOTT M. SEVIER

November 24,2020

Sevier, Scott

IMPORTANT NOTE: The seal on these truss component designs is a certification that the engineer named is licensed in the jurisdiction(s) identified and that the designs comply with ANSI/TPI 1. These designs are based upon parameters shown (e.g., loads, supports, dimensions, shapes and design codes), which were given to MiTek or TRENCO. Any project specific information included is for MiTek's or TRENCO's customers file reference purpose only, and was not taken into account in the preparation of these designs. MiTek or TRENCO has not independently verified the applicability of the design parameters or the designs for any particular building. Before use, the building designer should verify applicability of design parameters and properly incorporate these designs into the overall building design per ANSI/TPI 1, Chapter 2.

Job	Truss	Truss Type	Qty	Ply	KB Home 150.1910.D
150_1910_D	A1	Hip	1	1	I43742692 Job Reference (optional)

84 Components (Dunn), Dunn, NC - 28334, 8.430 s Nov 18 2020 MiTek Industries, Inc. Mon Nov 23 14:42:09 2020 Page 1

ID:VMD62rz1yiHD_OqRtbnrlFztQ8K-tAqK8ohkB9mVsPlHOE2u2SAxjxOPeHQCFlQ1lbyGGfS

-0-10-8	4-1-14	10-2-10	14-4-8	15-3-0
0-10-8	4-1-14	6-0-12	4-1-14	0-10-8

Scale = 1:26.7

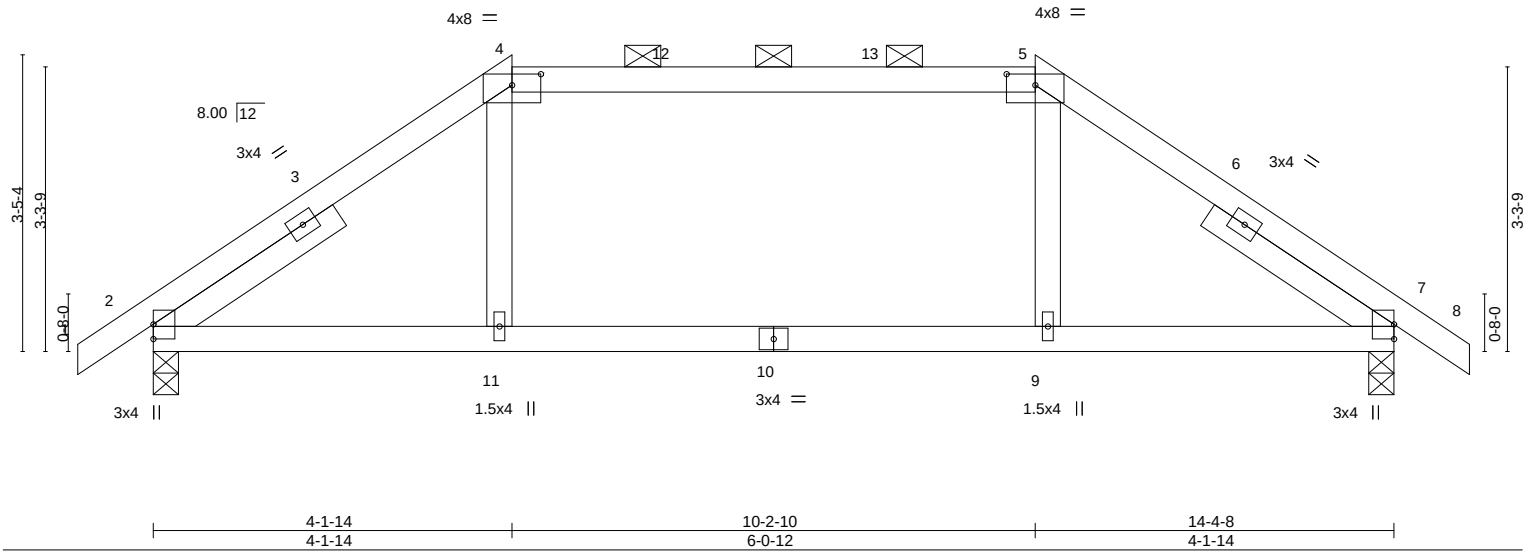

4-1-14	10-2-10	14-4-8
4-1-14	6-0-12	4-1-14

Plate Offsets (X,Y)-- [4:0-4-0,0-1-9], [5:0-4-0,0-1-9]

LOADING (psf)		**SPACING-** 2-0-0	**CSI.**		**DEFL.**	in	(loc)	l/defl	L/d	**PLATES**	**GRIP**
TCLL (roof)	20.0	Plate Grip DOL 1.15	TC	0.62	Vert(LL)	-0.07	9	>999	240	MT20	197/144
Snow (Pf/Pg)	16.5/15.0	Lumber DOL 1.15	BC	0.35	Vert(CT)	-0.09	9-11	>999	180		
TCDL	10.0	Rep Stress Incr YES	WB	0.09	Horz(CT)	0.01	7	n/a	n/a		
BCLL	0.0 *	Code IRC2015/TPI2014	Matrix-S							Weight: 65 lb	FT = 20%
BCDL	10.0										

LUMBER-

TOP CHORD 2x4 SP No.2 or 2x4 SPF No.2
BOT CHORD 2x4 SP No.2 or 2x4 SPF No.2
WEBS 2x4 SP No.3
SLIDER Left 2x4 SP or SPF No.2 -t 2-6-2, Right 2x4 SP or SPF No.2 -t 2-6-2

BRACING-

TOP CHORD Structural wood sheathing directly applied or 6-0-0 oc purlins, except 2-0-0 oc purlins (5-10-1 max.): 4-5.
BOT CHORD Rigid ceiling directly applied or 10-0-0 oc bracing.

REACTIONS. (size) 2=0-3-8, 7=0-3-8
Max Horz 2=64(LC 13)
Max Uplift 2=-6(LC 14), 7=-6(LC 15)
Max Grav 2=628(LC 2), 7=627(LC 2)

FORCES. (lb) - Max. Comp./Max. Ten. - All forces 250 (lb) or less except when shown.
TOP CHORD 2-4=-788/66, 4-5=-587/83, 5-7=-788/66
BOT CHORD 2-11=0/593, 9-11=0/587, 7-9=0/593

NOTES-

1) Unbalanced roof live loads have been considered for this design.
2) Wind: ASCE 7-10; Vult=115mph Vasd=91mph; TCDL=6.0psf; BCDL=6.0psf; h=25ft; Cat. II; Exp B; Enclosed; MWFRS (envelope) gable end zone and C-C Exterior(2) -0-10-8 to 2-1-8, Interior(1) 2-1-8 to 4-1-14, Exterior(2) 4-1-14 to 8-4-13, Interior(1) 8-4-13 to 10-2-10, Exterior(2) 10-2-10 to 14-4-8, Interior(1) 14-4-8 to 15-3-0 zone;C-C for members and forces & MWFRS for reactions shown; Lumber DOL=1.60 plate grip DOL=1.60
3) TCLL: ASCE 7-10; Pr=20.0 psf (roof live load: Lumber DOL=1.15 Plate DOL=1.15); Pg=15.0 psf (ground snow); Pf=16.5 psf (flat roof snow: Lumber DOL=1.15 Plate DOL=1.15); Category II; Exp B; Partially Exp.; Ct=1.10, Lu=50-0-0; Min. flat roof snow load governs. Rain surcharge applied to all exposed surfaces with slopes less than 0.500/12 in accordance with IBC 1608.3.4.
4) This truss has been designed for greater of min roof live load of 12.0 psf or 1.00 times flat roof load of 11.6 psf on overhangs non-concurrent with other live loads.
5) Provide adequate drainage to prevent water ponding.
6) This truss has been designed for a 10.0 psf bottom chord live load nonconcurrent with any other live loads.
7) * This truss has been designed for a live load of 20.0psf on the bottom chord in all areas where a rectangle 3-6-0 tall by 2-0-0 wide will fit between the bottom chord and any other members.
8) One H2.5A Simpson Strong-Tie connectors recommended to connect truss to bearing walls due to UPLIFT at jt(s) 2 and 7. This connection is for uplift only and does not consider lateral forces.
9) Graphical purlin representation does not depict the size or the orientation of the purlin along the top and/or bottom chord.

November 24,2020

WARNING - Verify design parameters and READ NOTES ON THIS AND INCLUDED MITEK REFERENCE PAGE MII-7473 rev. 5/19/2020 BEFORE USE.
Design valid for use only with MiTek® connectors. This design is based only upon parameters shown, and is for an individual building component, not a truss system. Before use, the building designer must verify the applicability of design parameters and properly incorporate this design into the overall building design. Bracing indicated is to prevent buckling of individual truss web and/or chord members only. Additional temporary and permanent bracing is always required for stability and to prevent collapse with possible personal injury and property damage. For general guidance regarding the fabrication, storage, delivery, erection and bracing of trusses and truss systems, see **ANSI/TPI1 Quality Criteria, DSB-89 and BCSI Building Component Safety Information** available from Truss Plate Institute, 2670 Crain Highway, Suite 203 Waldorf, MD 20601

ENGINEERING BY TRENCO A MiTek Affiliate
818 Soundside Road
Edenton, NC 27932

Job	Truss	Truss Type	Qty	Ply	KB Home 150.1910.D
150_1910_D	A2	Hip	1	1	I43742693 Job Reference (optional)

84 Components (Dunn), Dunn, NC - 28334, 8.430 s Nov 18 2020 MiTek Industries, Inc. Mon Nov 23 14:42:10 2020 Page 1
ID:VMD62rz1yiHD_OqRtbnrlFztQ8K-MMOiL8iMxSuMTZtTyya7bgj9SLkrNkqLTP9bI2yGGfR

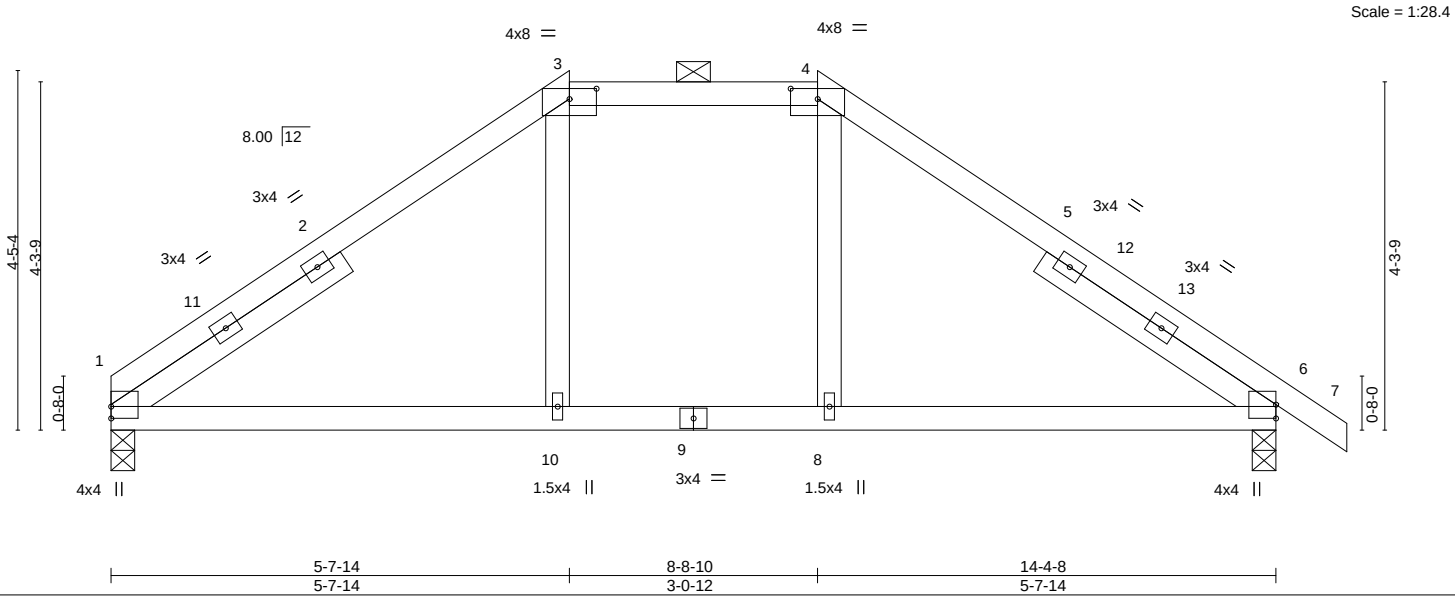

Plate Offsets (X,Y)-- [3:0-4-0,0-1-9], [4:0-4-0,0-1-9]

LOADING (psf)		SPACING-	2-0-0	CSI.		DEFL.	in	(loc)	l/defl	L/d	PLATES	GRIP
TCLL (roof)	20.0	Plate Grip DOL	1.15	TC	0.43	Vert(LL)	-0.07	1-10	>999	240	MT20	197/144
Snow (Pf/Pg)	16.5/15.0	Lumber DOL	1.15	BC	0.34	Vert(CT)	-0.10	1-10	>999	180		
TCDL	10.0	Rep Stress Incr	YES	WB	0.08	Horz(CT)	0.01	6	n/a	n/a		
BCLL	0.0 *	Code	IRC2015/TPI2014	Matrix-S							Weight: 70 lb	FT = 20%
BCDL	10.0											

LUMBER-

TOP CHORD	2x4 SP No.2 or 2x4 SPF No.2
BOT CHORD	2x4 SP No.2 or 2x4 SPF No.2
WEBS	2x4 SP No.3
SLIDER	Left 2x4 SP or SPF No.2 -t 3-4-15, Right 2x4 SP or SPF No.2 -t 3-4-15

BRACING-

TOP CHORD	Structural wood sheathing directly applied or 6-0-0 oc purlins, except 2-0-0 oc purlins (6-0-0 max.): 3-4.
BOT CHORD	Rigid ceiling directly applied or 10-0-0 oc bracing.

REACTIONS. (size) 1=0-3-8, 6=0-3-8
Max Horz 1=-82(LC 10)
Max Uplift 1=-3(LC 14), 6=-15(LC 15)
Max Grav 1=573(LC 2), 6=629(LC 2)

FORCES. (lb) - Max. Comp./Max. Ten. - All forces 250 (lb) or less except when shown.
TOP CHORD 1-3=-708/72, 3-4=-515/94, 4-6=-710/71
BOT CHORD 1-10=0/520, 8-10=0/515, 6-8=0/521

NOTES-

1) Unbalanced roof live loads have been considered for this design.
2) Wind: ASCE 7-10; Vult=115mph Vasd=91mph; TCDL=6.0psf; BCDL=6.0psf; h=25ft; Cat. II; Exp B; Enclosed; MWFRS (envelope) gable end zone and C-C Exterior(2) 0-0-0 to 3-0-0, Interior(1) 3-0-0 to 5-7-14, Exterior(2) 5-7-14 to 12-11-9, Interior(1) 12-11-9 to 15-3-0 zone;C-C for members and forces & MWFRS for reactions shown; Lumber DOL=1.60 plate grip DOL=1.60
3) TCLL: ASCE 7-10; Pr=20.0 psf (roof live load: Lumber DOL=1.15 Plate DOL=1.15); Pg=15.0 psf (ground snow); Pf=16.5 psf (flat roof snow: Lumber DOL=1.15 Plate DOL=1.15); Category II; Exp B; Partially Exp.; Ct=1.10, Lu=50-0-0; Min. flat roof snow load governs. Rain surcharge applied to all exposed surfaces with slopes less than 0.500/12 in accordance with IBC 1608.3.4.
4) This truss has been designed for greater of min roof live load of 12.0 psf or 1.00 times flat roof load of 11.6 psf on overhangs non-concurrent with other live loads.
5) Provide adequate drainage to prevent water ponding.
6) This truss has been designed for a 10.0 psf bottom chord live load nonconcurrent with any other live loads.
7) * This truss has been designed for a live load of 20.0psf on the bottom chord in all areas where a rectangle 3-6-0 tall by 2-0-0 wide will fit between the bottom chord and any other members, with BCDL = 10.0psf.
8) One H2.5A Simpson Strong-Tie connectors recommended to connect truss to bearing walls due to UPLIFT at jt(s) 1 and 6. This connection is for uplift only and does not consider lateral forces.
9) Graphical purlin representation does not depict the size or the orientation of the purlin along the top and/or bottom chord.

November 24,2020

WARNING - Verify design parameters and READ NOTES ON THIS AND INCLUDED MITEK REFERENCE PAGE MII-7473 rev. 5/19/2020 BEFORE USE.
Design valid for use only with MiTek® connectors. This design is based only upon parameters shown, and is for an individual building component, not a truss system. Before use, the building designer must verify the applicability of design parameters and properly incorporate this design into the overall building design. Bracing indicated is to prevent buckling of individual truss web and/or chord members only. Additional temporary and permanent bracing is always required for stability and to prevent collapse with possible personal injury and property damage. For general guidance regarding the fabrication, storage, delivery, erection and bracing of trusses and truss systems, see **ANSI/TPI1 Quality Criteria, DSB-89 and BCSI Building Component Safety Information** available from Truss Plate Institute, 2670 Crain Highway, Suite 203 Waldorf, MD 20601

ENGINEERING BY TRENCO A MiTek Affiliate
818 Soundside Road
Edenton, NC 27932

Job	Truss	Truss Type	Qty	Ply	KB Home 150.1910.D
150_1910_D	A3	Common	2	1	I43742694 Job Reference (optional)

84 Components (Dunn), Dunn, NC - 28334, 8.430 s Nov 18 2020 MiTek Industries, Inc. Mon Nov 23 14:42:11 2020 Page 1
ID:VMD62rz1yiHD_OqRtbnrlFztQ8K-qYy4ZUj_im0D5jSgWf5M7tGEAl006AGVi3v8qUyGGfQ

Scale = 1:34.0

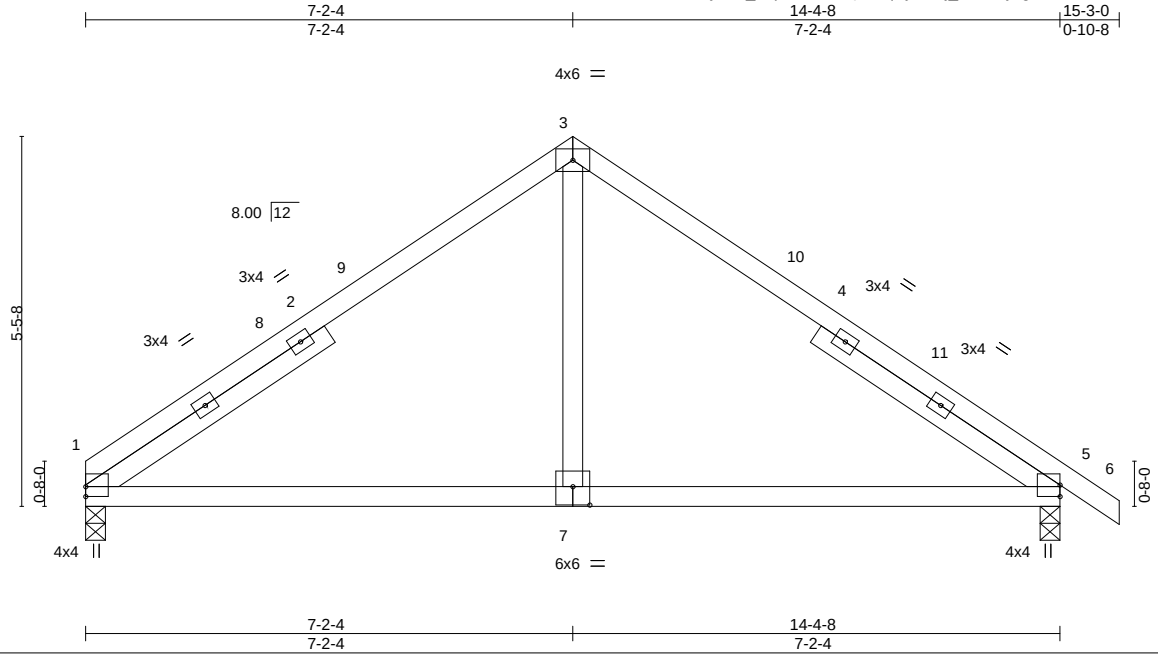

Plate Offsets (X,Y)-- [7:0-3-0,0-3-4]

LOADING (psf)		SPACING- 2-0-0	CSI.		DEFL.	in	(loc)	l/defl	L/d	PLATES	GRIP
TCLL (roof)	20.0	Plate Grip DOL 1.15	TC	0.82	Vert(LL)	-0.06	1-7	>999	240	MT20	197/144
Snow (Pf/Pg)	11.6/15.0	Lumber DOL 1.15	BC	0.53	Vert(CT)	-0.12	1-7	>999	180		
TCDL	10.0	Rep Stress Incr YES	WB	0.13	Horz(CT)	0.01	5	n/a	n/a		
BCLL	0.0 *	Code IRC2015/TPI2014	Matrix-S							Weight: 69 lb	FT = 20%
BCDL	10.0										

LUMBER-
TOP CHORD 2x4 SP No.2 or 2x4 SPF No.2
BOT CHORD 2x4 SP No.2 or 2x4 SPF No.2
WEBS 2x4 SP No.3
SLIDER Left 2x4 SP No.3 -t 4-2-15, Right 2x4 SP No.3 -t 4-2-15

BRACING-
TOP CHORD Structural wood sheathing directly applied or 3-7-9 oc purlins.
BOT CHORD Rigid ceiling directly applied or 10-0-0 oc bracing.

REACTIONS. (size) 1=0-3-8, 5=0-3-8
Max Horz 1=-102(LC 10)
Max Uplift 1=-9(LC 14), 5=-22(LC 15)
Max Grav 1=573(LC 2), 5=629(LC 2)

FORCES. (lb) - Max. Comp./Max. Ten. - All forces 250 (lb) or less except when shown.
TOP CHORD 1-3=-658/51, 3-5=-659/50
BOT CHORD 1-7=0/457, 5-7=0/457
WEBS 3-7=0/337

NOTES-
1) Unbalanced roof live loads have been considered for this design.
2) Wind: ASCE 7-10; Vult=115mph Vasd=91mph; TCDL=6.0psf; BCDL=6.0psf; h=25ft; Cat. II; Exp B; Enclosed; MWFRS (envelope) gable end zone and C-C Exterior(2) 0-0-0 to 3-0-0, Interior(1) 3-0-0 to 7-2-4, Exterior(2) 7-2-4 to 10-2-4, Interior(1) 10-2-4 to 15-3-0 zone;C-C for members and forces & MWFRS for reactions shown; Lumber DOL=1.60 plate grip DOL=1.60
3) TCLL: ASCE 7-10; Pr=20.0 psf (roof live load: Lumber DOL=1.15 Plate DOL=1.15); Pg=15.0 psf (ground snow); Pf=11.6 psf (flat roof snow: Lumber DOL=1.15 Plate DOL=1.15); Category II; Exp B; Partially Exp.; Ct=1.10
4) This truss has been designed for greater of min roof live load of 12.0 psf or 1.00 times flat roof load of 11.6 psf on overhangs non-concurrent with other live loads.
5) This truss has been designed for a 10.0 psf bottom chord live load nonconcurrent with any other live loads.
6) * This truss has been designed for a live load of 20.0psf on the bottom chord in all areas where a rectangle 3-6-0 tall by 2-0-0 wide will fit between the bottom chord and any other members.
7) One H2.5A Simpson Strong-Tie connectors recommended to connect truss to bearing walls due to UPLIFT at jt(s) 1 and 5. This connection is for uplift only and does not consider lateral forces.

November 24,2020

WARNING - Verify design parameters and READ NOTES ON THIS AND INCLUDED MITEK REFERENCE PAGE MII-7473 rev. 5/19/2020 BEFORE USE.
Design valid for use only with MiTek® connectors. This design is based only upon parameters shown, and is for an individual building component, not a truss system. Before use, the building designer must verify the applicability of design parameters and properly incorporate this design into the overall building design. Bracing indicated is to prevent buckling of individual truss web and/or chord members only. Additional temporary and permanent bracing is always required for stability and to prevent collapse with possible personal injury and property damage. For general guidance regarding the fabrication, storage, delivery, erection and bracing of trusses and truss systems, see **ANSI/TPI1 Quality Criteria, DSB-89 and BCSI Building Component Safety Information** available from Truss Plate Institute, 2670 Crain Highway, Suite 203 Waldorf, MD 20601

ENGINEERING BY TRENCO A MiTek Affiliate
818 Soundside Road
Edenton, NC 27932

Job	Truss	Truss Type	Qty	Ply	KB Home 150.1910.D
150_1910_D	AE	GABLE	1	1	I43742695 Job Reference (optional)

84 Components (Dunn), Dunn, NC - 28334, 8.430 s Nov 18 2020 MiTek Industries, Inc. Mon Nov 23 14:42:12 2020 Page 1
ID:VMD62rz1yiHD_OqRtbnrlFztQ8K-IlWTmqkcT484jt0s3Ncbg5obs9UIre7exjeiMwyGGfP

-0-10-8 | 2-7-14 | 11-8-10 | 14-4-8 | 15-3-0
0-10-8 | 2-7-14 | 9-0-12 | 2-7-14 | 0-10-8

Scale = 1:26.7

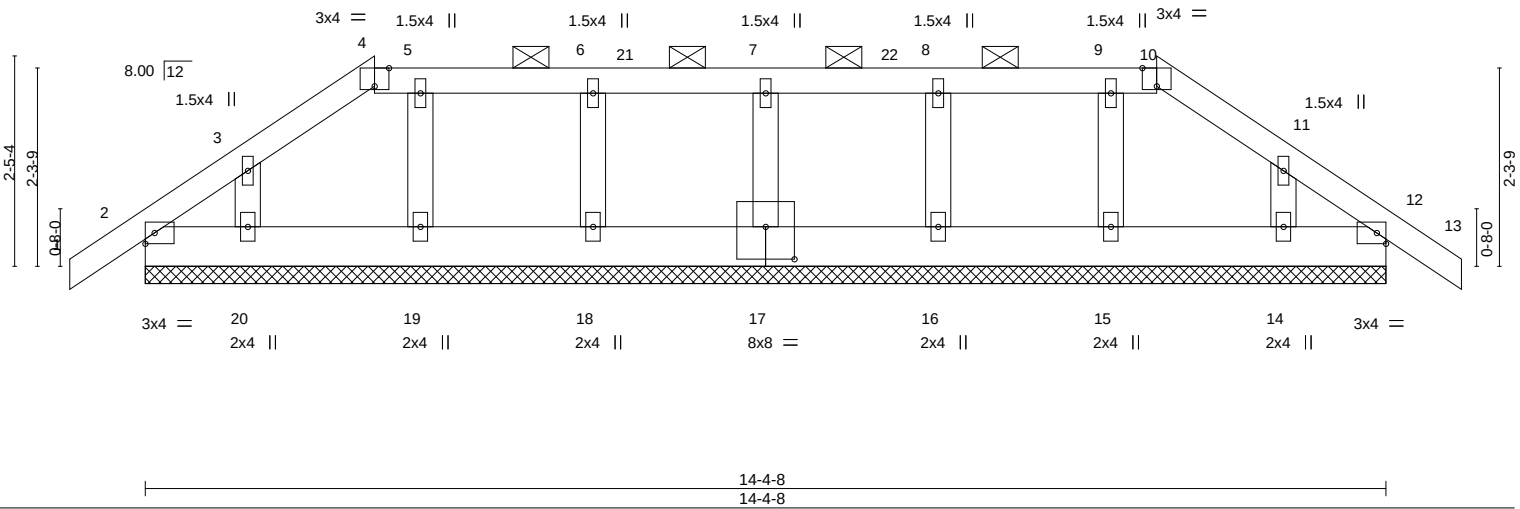

Plate Offsets (X,Y)-- [4:0-2-0,Edge], [10:0-2-0,Edge], [17:0-4-0,0-4-8]

LOADING (psf)		SPACING-	2-0-0	CSI.		DEFL.	in	(loc)	l/defl	L/d	PLATES	GRIP
TCLL (roof)	20.0	Plate Grip DOL	1.15	TC	0.05	Vert(LL)	-0.00	12	n/r	120	MT20	197/144
Snow (Pf/Pg)	16.5/15.0	Lumber DOL	1.15	BC	0.02	Vert(CT)	-0.00	13	n/r	120		
TCDL	10.0	Rep Stress Incr	YES	WB	0.03	Horz(CT)	0.00	12	n/a	n/a		
BCLL	0.0 *	Code IRC2015/TPI2014		Matrix-S							Weight: 74 lb	FT = 20%
BCDL	10.0											

LUMBER-
TOP CHORD 2x4 SP No.2 or 2x4 SPF No.2
BOT CHORD 2x6 SP No.2
OTHERS 2x4 SP No.3

BRACING-
TOP CHORD Structural wood sheathing directly applied or 6-0-0 oc purlins, except 2-0-0 oc purlins (6-0-0 max.): 4-10.
BOT CHORD Rigid ceiling directly applied or 10-0-0 oc bracing.

REACTIONS. All bearings 14-4-8.
(lb) - Max Horz 2=-44(LC 12)
Max Uplift All uplift 100 lb or less at joint(s) 12, 17, 18, 19, 20, 16, 15, 14, 2
Max Grav All reactions 250 lb or less at joint(s) 12, 17, 18, 19, 20, 16, 15, 14, 2

FORCES. (lb) - Max. Comp./Max. Ten. - All forces 250 (lb) or less except when shown.

NOTES-
1) Unbalanced roof live loads have been considered for this design.
2) Wind: ASCE 7-10; Vult=115mph Vasd=91mph; TCDL=6.0psf; BCDL=6.0psf; h=25ft; Cat. II; Exp B; Enclosed; MWFRS (envelope) gable end zone and C-C Corner(3) -0-10-8 to 2-1-8, Exterior(2) 2-1-8 to 2-7-14, Corner(3) 2-7-14 to 5-7-14, Exterior(2) 5-7-14 to 11-8-10, Corner(3) 11-8-10 to 14-8-10, Exterior(2) 14-8-10 to 15-3-0 zone;C-C for members and forces & MWFRS for reactions shown; Lumber DOL=1.60 plate grip DOL=1.60
3) Truss designed for wind loads in the plane of the truss only. For studs exposed to wind (normal to the face), see Standard Industry Gable End Details as applicable, or consult qualified building designer as per ANSI/TPI 1.
4) TCLL: ASCE 7-10; Pr=20.0 psf (roof live load: Lumber DOL=1.15 Plate DOL=1.15); Pg=15.0 psf (ground snow); Pf=16.5 psf (flat roof snow: Lumber DOL=1.15 Plate DOL=1.15); Category II; Exp B; Partially Exp.; Ct=1.10, Lu=50-0-0; Min. flat roof snow load governs. Rain surcharge applied to all exposed surfaces with slopes less than 0.500/12 in accordance with IBC 1608.3.4.
5) This truss has been designed for greater of min roof live load of 12.0 psf or 1.00 times flat roof load of 11.6 psf on overhangs non-concurrent with other live loads.
6) Provide adequate drainage to prevent water ponding.
7) Gable requires continuous bottom chord bearing.
8) Gable studs spaced at 2-0-0 oc.
9) This truss has been designed for a 10.0 psf bottom chord live load nonconcurrent with any other live loads.
10) * This truss has been designed for a live load of 20.0psf on the bottom chord in all areas where a rectangle 3-6-0 tall by 2-0-0 wide will fit between the bottom chord and any other members.
11) n/a
12) Graphical purlin representation does not depict the size or the orientation of the purlin along the top and/or bottom chord.

November 24,2020

WARNING - Verify design parameters and READ NOTES ON THIS AND INCLUDED MITEK REFERENCE PAGE MII-7473 rev. 5/19/2020 BEFORE USE.
Design valid for use only with MiTek® connectors. This design is based only upon parameters shown, and is for an individual building component, not a truss system. Before use, the building designer must verify the applicability of design parameters and properly incorporate this design into the overall building design. Bracing indicated is to prevent buckling of individual truss web and/or chord members only. Additional temporary and permanent bracing is always required for stability and to prevent collapse with possible personal injury and property damage. For general guidance regarding the fabrication, storage, delivery, erection and bracing of trusses and truss systems, see **ANSI/TPI1 Quality Criteria, DSB-89 and BCSI Building Component Safety Information** available from Truss Plate Institute, 2670 Crain Highway, Suite 203 Waldorf, MD 20601

ENGINEERING BY TRENCO A MiTek Affiliate
818 Soundside Road
Edenton, NC 27932

Job	Truss	Truss Type	Qty	Ply	KB Home 150.1910.D
150_1910_D	AG	COMMON GIRDER	1	2	I43742696 Job Reference (optional)

84 Components (Dunn), Dunn, NC - 28334, 8.430 s Nov 18 2020 MiTek Industries, Inc. Mon Nov 23 14:42:16 2020 Page 1
ID:VMD62rz1yiHD_OqRtbnrlFztQ8K-AWlzcCn7XIeVBUKdICgXqxzCZmfXnH9EsLcvVhyGGfL

Scale = 1:34.5

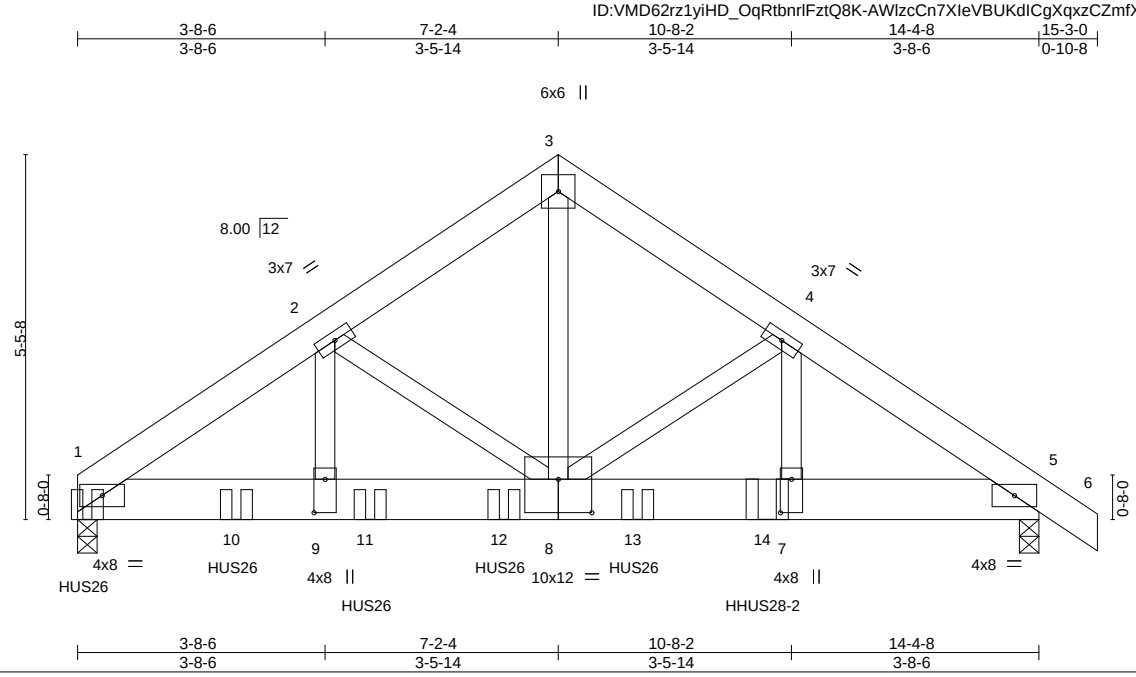

Plate Offsets (X,Y)-- [7:0-6-0,0-2-0], [8:0-6-0,0-6-0], [9:0-6-0,0-2-0]

LOADING (psf)		**SPACING-** 2-0-0	**CSI.**		**DEFL.**	in	(loc)	l/defl	L/d	**PLATES**	**GRIP**
TCLL (roof)	20.0	Plate Grip DOL 1.15	TC	0.26	Vert(LL)	-0.05	7-8	>999	240	MT20	197/144
Snow (Pf/Pg)	11.6/15.0	Lumber DOL 1.15	BC	0.89	Vert(CT)	-0.11	7-8	>999	180		
TCDL	10.0	Rep Stress Incr NO	WB	0.73	Horz(CT)	0.03	5	n/a	n/a		
BCLL	0.0 *	Code IRC2015/TPI2014	Matrix-S							Weight: 225 lb	FT = 20%
BCDL	10.0										

LUMBER-
TOP CHORD 2x6 SP No.2
BOT CHORD 2x8 SP No.2
WEBS 2x4 SP No.3 *Except*
3-8: 2x4 SP No.2 or 2x4 SPF No.2

BRACING-
TOP CHORD Structural wood sheathing directly applied or 5-4-8 oc purlins.
BOT CHORD Rigid ceiling directly applied or 10-0-0 oc bracing.

REACTIONS. (size) 1=0-3-8 (req. 0-5-8), 5=(0-3-8 + TBE4 Simpson Strong-Tie) (req. 0-3-12)
Max Horz 1=-101(LC 30)
Max Uplift 5=-327(LC 11)
Max Grav 1=7029(LC 2), 5=4749(LC 2)

FORCES. (lb) - Max. Comp./Max. Ten. - All forces 250 (lb) or less except when shown.
TOP CHORD 1-2=-7963/0, 2-3=-5732/262, 3-4=-5728/260, 4-5=-7671/527
BOT CHORD 1-9=0/6406, 8-9=0/6406, 7-8=-381/6136, 5-7=-381/6136
WEBS 3-8=-228/5918, 4-8=-1704/368, 4-7=-330/2236, 2-8=-2039/0, 2-9=0/2572

NOTES-
1) 2-ply truss to be connected together with 10d (0.131"x3") nails as follows:
Top chords connected as follows: 2x6 - 2 rows staggered at 0-9-0 oc.
Bottom chords connected as follows: 2x8 - 2 rows staggered at 0-4-0 oc.
Webs connected as follows: 2x4 - 1 row at 0-9-0 oc.
2) All loads are considered equally applied to all plies, except if noted as front (F) or back (B) face in the LOAD CASE(S) section. Ply to ply connections have been provided to distribute only loads noted as (F) or (B), unless otherwise indicated.
3) Unbalanced roof live loads have been considered for this design.
4) Wind: ASCE 7-10; Vult=115mph Vasd=91mph; TCDL=6.0psf; BCDL=6.0psf; h=25ft; Cat. II; Exp B; Enclosed; MWFRS (envelope) gable end zone; Lumber DOL=1.60 plate grip DOL=1.60
5) TCLL: ASCE 7-10; Pr=20.0 psf (roof live load: Lumber DOL=1.15 Plate DOL=1.15); Pg=15.0 psf (ground snow); Pf=11.6 psf (flat roof snow: Lumber DOL=1.15 Plate DOL=1.15); Category II; Exp B; Partially Exp.; Ct=1.10
6) This truss has been designed for greater of min roof live load of 12.0 psf or 1.00 times flat roof load of 11.6 psf on overhangs non-concurrent with other live loads.
7) This truss has been designed for a 10.0 psf bottom chord live load nonconcurrent with any other live loads.
8) * This truss has been designed for a live load of 20.0psf on the bottom chord in all areas where a rectangle 3-6-0 tall by 2-0-0 wide will fit between the bottom chord and any other members.
9) WARNING: Required bearing size at joint(s) 1 greater than input bearing size.
10) TBE4 Simpson Strong-Tie connectors recommended to connect truss to bearing walls due to UPLIFT at jt(s) 5. This connection is for uplift only and does not consider lateral forces.
11) Use Simpson Strong-Tie HUS26 (14-10d Girder, 4-10d Truss) or equivalent spaced at 2-2-12 oc max. starting at 0-1-12 from the left end to 8-4-8 to connect truss(es) to back face of bottom chord.
12) Use Simpson Strong-Tie HHUS28-2 (22-10d Girder, 4-10d Truss) or equivalent at 10-3-12 from the left end to connect truss(es) to back face of bottom chord.
13) Fill all nail holes where hanger is in contact with lumber.

November 24,2020

Continued on page 2

LOAD CASE(S) Standard

WARNING - Verify design parameters and READ NOTES ON THIS AND INCLUDED MITEK REFERENCE PAGE MII-7473 rev. 5/19/2020 BEFORE USE.
Design valid for use only with MiTek® connectors. This design is based only upon parameters shown, and is for an individual building component, not a truss system. Before use, the building designer must verify the applicability of design parameters and properly incorporate this design into the overall building design. Bracing indicated is to prevent buckling of individual truss web and/or chord members only. Additional temporary and permanent bracing is always required for stability and to prevent collapse with possible personal injury and property damage. For general guidance regarding the fabrication, storage, delivery, erection and bracing of trusses and truss systems, see **ANSI/TPI1 Quality Criteria, DSB-89 and BCSI Building Component Safety Information** available from Truss Plate Institute, 2670 Crain Highway, Suite 203 Waldorf, MD 20601

ENGINEERING BY TRENCO A MiTek Affiliate
818 Soundside Road
Edenton, NC 27932

LOAD CASE(S) Standard

1) Dead + Snow (balanced): Lumber Increase=1.15, Plate Increase=1.15
   Uniform Loads (plf)
   Vert: 1-3=-43, 3-6=-43, 1-5=-20
   Concentrated Loads (lb)
   Vert: 1=-1619(B) 10=-1544(B) 11=-1541(B) 12=-1608(B) 13=-1657(B) 14=-2132(B)

WARNING - Verify design parameters and READ NOTES ON THIS AND INCLUDED MITEK REFERENCE PAGE MII-7473 rev. 5/19/2020 BEFORE USE.
Design valid for use only with MiTek® connectors. This design is based only upon parameters shown, and is for an individual building component, not a truss system. Before use, the building designer must verify the applicability of design parameters and properly incorporate this design into the overall building design. Bracing indicated is to prevent buckling of individual truss web and/or chord members only. Additional temporary and permanent bracing is always required for stability and to prevent collapse with possible personal injury and property damage. For general guidance regarding the fabrication, storage, delivery, erection and bracing of trusses and truss systems, see **ANSI/TPI1 Quality Criteria, DSB-89 and BCSI Building Component Safety Information** available from Truss Plate Institute, 2670 Crain Highway, Suite 203 Waldorf, MD 20601

ENGINEERING BY TRENCO A MiTek Affiliate
818 Soundside Road
Edenton, NC 27932

Job	Truss	Truss Type	Qty	Ply	KB Home 150.1910.D
150_1910_D	B1	HIP	1	1	I43742697 Job Reference (optional)

84 Components (Dunn), Dunn, NC - 28334, 8.430 s Nov 18 2020 MiTek Industries, Inc. Mon Nov 23 14:42:17 2020 Page 1

ID:VMD62rz1yiHD_OqRtbnrIFztQ8K-eiJMpYnIIcmMpevpswCmN8WI3A7rWnAN4?MT18yGGfK

-0-10-8	5-6-4	10-9-0	16-9-8	21-10-8	27-3-0
0-10-8	5-6-4	5-2-12	6-0-8	5-1-0	5-4-8

Scale = 1:52.1

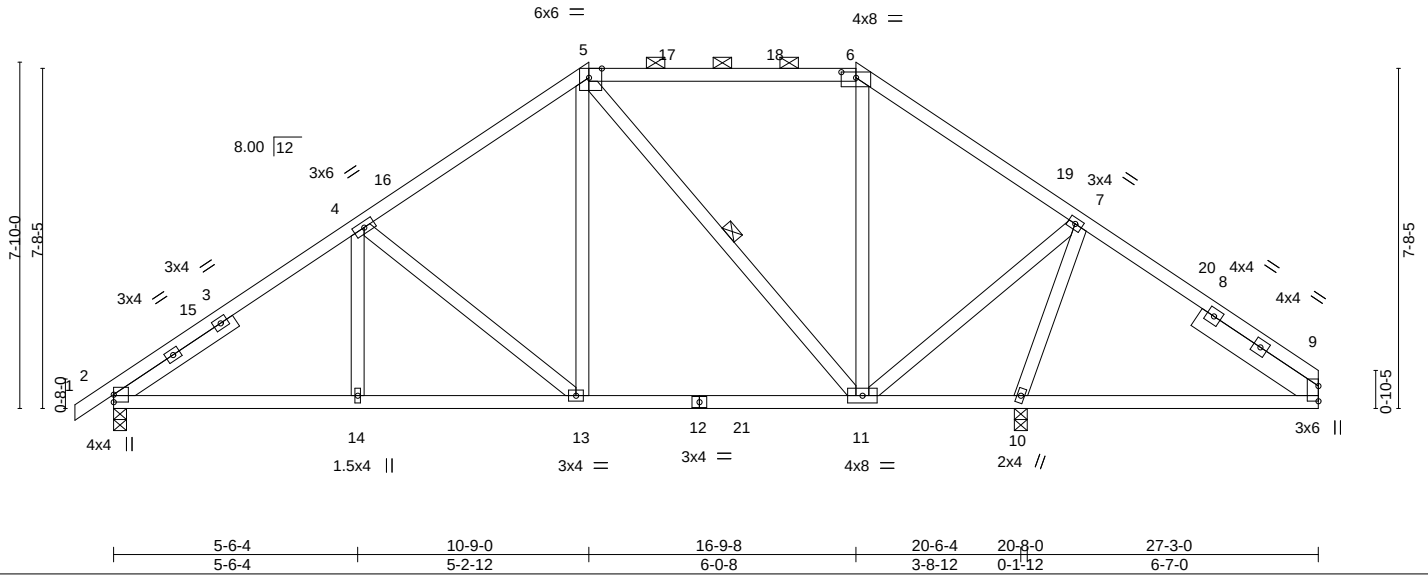

5-6-4	10-9-0	16-9-8	20-6-4	20-8-0	27-3-0
5-6-4	5-2-12	6-0-8	3-8-12	0-1-12	6-7-0

Plate Offsets (X,Y)-- [5:0-3-8,Edge], [6:0-4-0,0-1-9], [9:Edge,0-0-0]

LOADING (psf)		**SPACING-** 2-0-0	**CSI.**		**DEFL.**	in	(loc)	l/defl	L/d	**PLATES**	**GRIP**
TCLL (roof)	20.0	Plate Grip DOL 1.15	TC	0.60	Vert(LL)	-0.05	11-13	>999	240	MT20	197/144
Snow (Pf/Pg)	16.5/15.0	Lumber DOL 1.15	BC	0.38	Vert(CT)	-0.11	11-13	>999	180		
TCDL	10.0	Rep Stress Incr YES	WB	0.55	Horz(CT)	0.02	10	n/a	n/a		
BCLL	0.0 *	Code IRC2015/TPI2014	Matrix-S							Weight: 167 lb	FT = 20%
BCDL	10.0										

LUMBER-

TOP CHORD 2x4 SP No.2 or 2x4 SPF No.2
BOT CHORD 2x4 SP No.2 or 2x4 SPF No.2
WEBS 2x4 SP No.3
SLIDER Left 2x4 SP or SPF No.2 -t 3-2-15, Right 2x6 SP No.2 -t 3-3-5

BRACING-

TOP CHORD Structural wood sheathing directly applied or 6-0-0 oc purlins, except 2-0-0 oc purlins (6-0-0 max.): 5-6.
BOT CHORD Rigid ceiling directly applied or 6-0-0 oc bracing.
WEBS 1 Row at midpt 5-11

REACTIONS. (size) 2=0-3-8, 10=0-3-8
Max Horz 2=147(LC 13)
Max Uplift 2=-36(LC 14), 10=-5(LC 15)
Max Grav 2=814(LC 30), 10=1450(LC 2)

FORCES. (lb) - Max. Comp./Max. Ten. - All forces 250 (lb) or less except when shown.
TOP CHORD 2-4=-1031/58, 4-5=-689/106, 6-7=-272/98, 7-9=-16/399
BOT CHORD 2-14=-73/786, 13-14=-73/786, 11-13=-64/505, 10-11=-698/90
WEBS 4-13=-366/119, 5-13=-1/429, 5-11=-504/29, 6-11=-267/64, 7-11=-1/1073, 7-10=-1395/119

NOTES-

1) Unbalanced roof live loads have been considered for this design.
2) Wind: ASCE 7-10; Vult=115mph Vasd=91mph; TCDL=6.0psf; BCDL=6.0psf; h=25ft; Cat. II; Exp B; Enclosed; MWFRS (envelope) gable end zone and C-C Exterior(2) -0-10-8 to 2-1-8, Interior(1) 2-1-8 to 10-9-0, Exterior(2) 10-9-0 to 14-11-15, Interior(1) 14-11-15 to 16-9-8, Exterior(2) 16-9-8 to 21-0-7, Interior(1) 21-0-7 to 27-3-0 zone;C-C for members and forces & MWFRS for reactions shown; Lumber DOL=1.60 plate grip DOL=1.60
3) TCLL: ASCE 7-10; Pr=20.0 psf (roof live load: Lumber DOL=1.15 Plate DOL=1.15); Pg=15.0 psf (ground snow); Pf=16.5 psf (flat roof snow: Lumber DOL=1.15 Plate DOL=1.15); Category II; Exp B; Partially Exp.; Ct=1.10, Lu=50-0-0; Min. flat roof snow load governs. Rain surcharge applied to all exposed surfaces with slopes less than 0.500/12 in accordance with IBC 1608.3.4.
4) This truss has been designed for greater of min roof live load of 12.0 psf or 1.00 times flat roof load of 11.6 psf on overhangs non-concurrent with other live loads.
5) Provide adequate drainage to prevent water ponding.
6) This truss has been designed for a 10.0 psf bottom chord live load nonconcurrent with any other live loads.
7) * This truss has been designed for a live load of 20.0psf on the bottom chord in all areas where a rectangle 3-6-0 tall by 2-0-0 wide will fit between the bottom chord and any other members, with BCDL = 10.0psf.
8) Provide mechanical connection (by others) of truss to bearing plate capable of withstanding 100 lb uplift at joint(s) 10.
9) One RT7A USP connectors recommended to connect truss to bearing walls due to UPLIFT at jt(s) 2. This connection is for uplift only and does not consider lateral forces.
10) Graphical purlin representation does not depict the size or the orientation of the purlin along the top and/or bottom chord.

November 24,2020

WARNING - Verify design parameters and READ NOTES ON THIS AND INCLUDED MITEK REFERENCE PAGE MII-7473 rev. 5/19/2020 BEFORE USE.
Design valid for use only with MiTek® connectors. This design is based only upon parameters shown, and is for an individual building component, not a truss system. Before use, the building designer must verify the applicability of design parameters and properly incorporate this design into the overall building design. Bracing indicated is to prevent buckling of individual truss web and/or chord members only. Additional temporary and permanent bracing is always required for stability and to prevent collapse with possible personal injury and property damage. For general guidance regarding the fabrication, storage, delivery, erection and bracing of trusses and truss systems, see **ANSI/TPI1 Quality Criteria, DSB-89 and BCSI Building Component Safety Information** available from Truss Plate Institute, 2670 Crain Highway, Suite 203 Waldorf, MD 20601

ENGINEERING BY TRENCO A MiTek Affiliate
818 Soundside Road
Edenton, NC 27932

Job	Truss	Truss Type	Qty	Ply	KB Home 150.1910.D
150_1910_D	B2	Hip	1	1	I43742698 Job Reference (optional)

84 Components (Dunn), Dunn, NC - 28334, 8.430 s Nov 18 2020 MiTek Industries, Inc. Mon Nov 23 14:42:18 2020 Page 1

ID:VMD62rz1yiHD_OqRtbnrIFztQ8K-7vtk1toN3wuDRoU0Qdj?vM2RmZRjFD?XJf50aayGGfJ

-0-10-8	6-3-4	12-3-0	15-3-8	21-1-8	27-3-0
0-10-8	6-3-4	5-11-12	3-0-8	5-10-0	6-1-8

Scale = 1:56.4

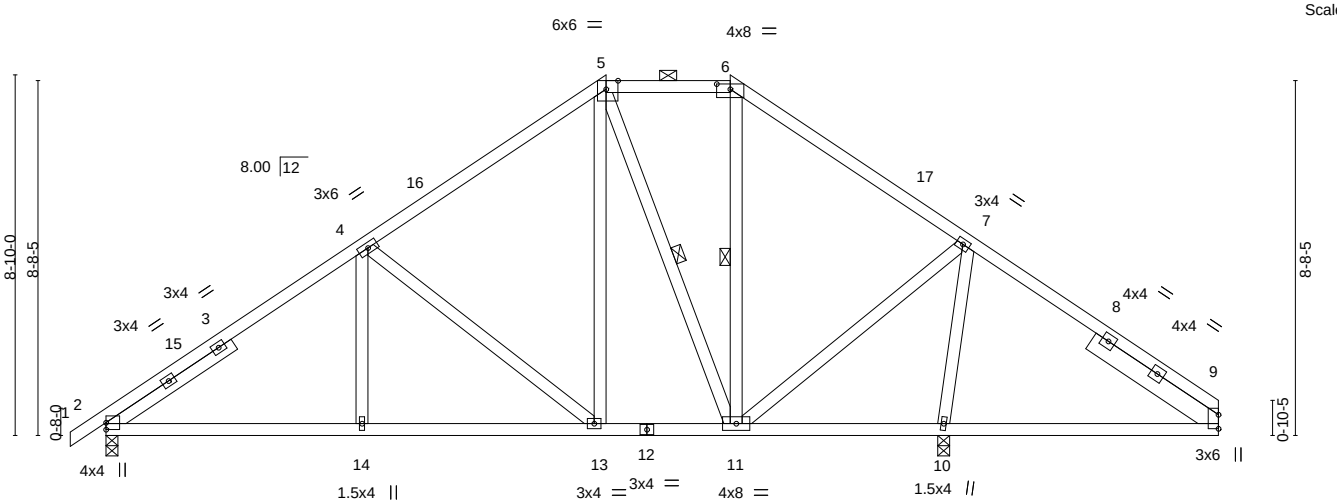

6-3-4	12-3-0	15-3-8	20-6-4	20-8-0	27-3-0
6-3-4	5-11-12	3-0-8	5-2-12	0-1-12	6-7-0

Plate Offsets (X,Y)-- [5:0-3-8,Edge], [6:0-4-0,0-1-9], [9:Edge,0-0-0]

LOADING (psf)		**SPACING-** 2-0-0	**CSI.**		**DEFL.**	in	(loc)	l/defl	L/d	**PLATES**	**GRIP**
TCLL (roof)	20.0	Plate Grip DOL 1.15	TC	0.73	Vert(LL)	-0.04	2-14	>999	240	MT20	197/144
Snow (Pf/Pg)	16.5/15.0	Lumber DOL 1.15	BC	0.40	Vert(CT)	-0.09	2-14	>999	180		
TCDL	10.0	Rep Stress Incr YES	WB	0.58	Horz(CT)	0.01	10	n/a	n/a		
BCLL	0.0 *	Code IRC2015/TPI2014	Matrix-S							Weight: 176 lb	FT = 20%
BCDL	10.0										

LUMBER-

TOP CHORD	2x4 SP No.2 or 2x4 SPF No.2
BOT CHORD	2x4 SP No.2 or 2x4 SPF No.2
WEBS	2x4 SP No.3
SLIDER	Left 2x4 SP or SPF No.2 -t 3-8-5, Right 2x6 SP No.2 -t 3-8-10

BRACING-

TOP CHORD	Structural wood sheathing directly applied or 6-0-0 oc purlins, except 2-0-0 oc purlins (6-0-0 max.): 5-6.
BOT CHORD	Rigid ceiling directly applied or 6-0-0 oc bracing.
WEBS	1 Row at midpt 5-11, 6-11

REACTIONS. (size) 2=0-3-8, 10=0-3-8
Max Horz 2=167(LC 11)
Max Uplift 2=-40(LC 14), 10=-16(LC 15)
Max Grav 2=803(LC 30), 10=1448(LC 2)

FORCES. (lb) - Max. Comp./Max. Ten. - All forces 250 (lb) or less except when shown.

TOP CHORD	2-4=-994/55, 4-5=-579/115, 5-6=-255/125, 6-7=-372/110, 7-9=-28/444
BOT CHORD	2-14=-70/754, 13-14=-70/754, 11-13=-43/387, 10-11=-437/85, 9-10=-265/72
WEBS	4-14=0/267, 4-13=-468/130, 5-13=-23/387, 5-11=-412/44, 7-11=0/837, 7-10=-1307/119

NOTES-

1) Unbalanced roof live loads have been considered for this design.
2) Wind: ASCE 7-10; Vult=115mph Vasd=91mph; TCDL=6.0psf; BCDL=6.0psf; h=25ft; Cat. II; Exp B; Enclosed; MWFRS (envelope) gable end zone and C-C Exterior(2) -0-10-8 to 2-1-8, Interior(1) 2-1-8 to 12-3-0, Exterior(2) 12-3-0 to 19-6-7, Interior(1) 19-6-7 to 27-3-0 zone;C-C for members and forces & MWFRS for reactions shown; Lumber DOL=1.60 plate grip DOL=1.60
3) TCLL: ASCE 7-10; Pr=20.0 psf (roof live load: Lumber DOL=1.15 Plate DOL=1.15); Pg=15.0 psf (ground snow); Pf=16.5 psf (flat roof snow: Lumber DOL=1.15 Plate DOL=1.15); Category II; Exp B; Partially Exp.; Ct=1.10, Lu=50-0-0; Min. flat roof snow load governs. Rain surcharge applied to all exposed surfaces with slopes less than 0.500/12 in accordance with IBC 1608.3.4.
4) This truss has been designed for greater of min roof live load of 12.0 psf or 1.00 times flat roof load of 11.6 psf on overhangs non-concurrent with other live loads.
5) Provide adequate drainage to prevent water ponding.
6) This truss has been designed for a 10.0 psf bottom chord live load nonconcurrent with any other live loads.
7) * This truss has been designed for a live load of 20.0psf on the bottom chord in all areas where a rectangle 3-6-0 tall by 2-0-0 wide will fit between the bottom chord and any other members.
8) Provide mechanical connection (by others) of truss to bearing plate capable of withstanding 100 lb uplift at joint(s) 10.
9) One RT7A USP connectors recommended to connect truss to bearing walls due to UPLIFT at jt(s) 2. This connection is for uplift only and does not consider lateral forces.
10) Graphical purlin representation does not depict the size or the orientation of the purlin along the top and/or bottom chord.

November 24,2020

WARNING - Verify design parameters and READ NOTES ON THIS AND INCLUDED MITEK REFERENCE PAGE MII-7473 rev. 5/19/2020 BEFORE USE.
Design valid for use only with MiTek® connectors. This design is based only upon parameters shown, and is for an individual building component, not a truss system. Before use, the building designer must verify the applicability of design parameters and properly incorporate this design into the overall building design. Bracing indicated is to prevent buckling of individual truss web and/or chord members only. Additional temporary and permanent bracing is always required for stability and to prevent collapse with possible personal injury and property damage. For general guidance regarding the fabrication, storage, delivery, erection and bracing of trusses and truss systems, see **ANSI/TPI1 Quality Criteria, DSB-89 and BCSI Building Component Safety Information** available from Truss Plate Institute, 2670 Crain Highway, Suite 203 Waldorf, MD 20601

ENGINEERING BY TRENCO A MiTek Affiliate
818 Soundside Road
Edenton, NC 27932

Job	Truss	Truss Type	Qty	Ply	KB Home 150.1910.D
150_1910_D	B3	Common	3	1	I43742699 Job Reference (optional)

84 Components (Dunn), Dunn, NC - 28334, 8.430 s Nov 18 2020 MiTek Industries, Inc. Mon Nov 23 14:42:19 2020 Page 1

ID:VMD62rz1yiHD_OqRtbnrlFztQ8K-b5R6EDp?qD142y3C_LEESZbchzmd_m5gYJrZ60yGGfI

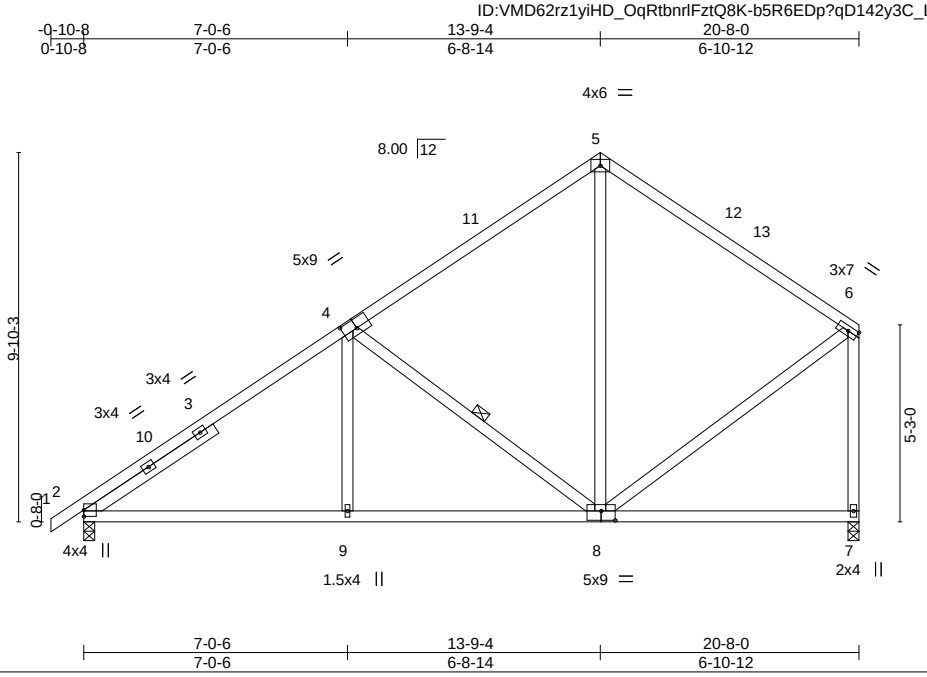

Plate Offsets (X,Y)-- [4:0-4-8,0-3-0], [8:0-4-8,0-3-0]

LOADING (psf)		**SPACING-** 2-0-0	**CSI.**		**DEFL.**	in	(loc)	l/defl	L/d	**PLATES**	**GRIP**
TCLL (roof)	20.0	Plate Grip DOL 1.15	TC	0.72	Vert(LL)	-0.06	2-9	>999	240	MT20	197/144
Snow (Pf/Pg)	11.6/15.0	Lumber DOL 1.15	BC	0.48	Vert(CT)	-0.13	2-9	>999	180		
TCDL	10.0	Rep Stress Incr YES	WB	0.20	Horz(CT)	0.02	7	n/a	n/a		
BCLL	0.0 *	Code IRC2015/TPI2014	Matrix-S							Weight: 128 lb	FT = 20%
BCDL	10.0										

LUMBER-

TOP CHORD 2x4 SP No.2 or 2x4 SPF No.2
BOT CHORD 2x4 SP No.2 or 2x4 SPF No.2
WEBS 2x4 SP No.3
SLIDER Left 2x4 SP No.3 -t 4-1-13

BRACING-

TOP CHORD Structural wood sheathing directly applied or 4-8-2 oc purlins, except end verticals.
BOT CHORD Rigid ceiling directly applied or 10-0-0 oc bracing.
WEBS 1 Row at midpt 4-8

REACTIONS. (size) 2=0-3-8, 7=0-3-8
Max Horz 2=217(LC 14)
Max Uplift 2=-23(LC 14), 7=-30(LC 14)
Max Grav 2=874(LC 2), 7=820(LC 2)

FORCES. (lb) - Max. Comp./Max. Ten. - All forces 250 (lb) or less except when shown.
TOP CHORD 2-4=-1087/26, 4-5=-616/85, 5-6=-604/88, 6-7=-759/68
BOT CHORD 2-9=-139/828, 8-9=-139/828
WEBS 4-9=0/289, 4-8=-528/151, 5-8=0/286, 6-8=-21/482

NOTES-

1) Unbalanced roof live loads have been considered for this design.
2) Wind: ASCE 7-10; Vult=115mph Vasd=91mph; TCDL=6.0psf; BCDL=6.0psf; h=25ft; Cat. II; Exp B; Enclosed; MWFRS (envelope) gable end zone and C-C Exterior(2) -0-10-8 to 2-1-8, Interior(1) 2-1-8 to 13-9-4, Exterior(2) 13-9-4 to 16-9-4, Interior(1) 16-9-4 to 20-6-4 zone;C-C for members and forces & MWFRS for reactions shown; Lumber DOL=1.60 plate grip DOL=1.60
3) TCLL: ASCE 7-10; Pr=20.0 psf (roof live load: Lumber DOL=1.15 Plate DOL=1.15); Pg=15.0 psf (ground snow); Pf=11.6 psf (flat roof snow: Lumber DOL=1.15 Plate DOL=1.15); Category II; Exp B; Partially Exp.; Ct=1.10
4) This truss has been designed for greater of min roof live load of 12.0 psf or 1.00 times flat roof load of 11.6 psf on overhangs non-concurrent with other live loads.
5) This truss has been designed for a 10.0 psf bottom chord live load nonconcurrent with any other live loads.
6) * This truss has been designed for a live load of 20.0psf on the bottom chord in all areas where a rectangle 3-6-0 tall by 2-0-0 wide will fit between the bottom chord and any other members.
7) One RT7A USP connectors recommended to connect truss to bearing walls due to UPLIFT at jt(s) 2 and 7. This connection is for uplift only and does not consider lateral forces.

November 24,2020

WARNING - Verify design parameters and READ NOTES ON THIS AND INCLUDED MITEK REFERENCE PAGE MII-7473 rev. 5/19/2020 BEFORE USE.
Design valid for use only with MiTek® connectors. This design is based only upon parameters shown, and is for an individual building component, not a truss system. Before use, the building designer must verify the applicability of design parameters and properly incorporate this design into the overall building design. Bracing indicated is to prevent buckling of individual truss web and/or chord members only. Additional temporary and permanent bracing is always required for stability and to prevent collapse with possible personal injury and property damage. For general guidance regarding the fabrication, storage, delivery, erection and bracing of trusses and truss systems, see **ANSI/TPI1 Quality Criteria, DSB-89 and BCSI Building Component Safety Information** available from Truss Plate Institute, 2670 Crain Highway, Suite 203 Waldorf, MD 20601

ENGINEERING BY TRENCO A MiTek Affiliate
818 Soundside Road
Edenton, NC 27932

Job	Truss	Truss Type	Qty	Ply	KB Home 150.1910.D
150_1910_D	BE	GABLE	1	1	I43742700
					Job Reference (optional)

8.420 s Oct 9 2020 MiTek Industries, Inc. Tue Nov 24 08:49:14 2020 Page 1
ID:VMD62rz1yiHD_OqRtbnrlFztQ8K-9lbYDK2ObtguNMEQzcRRCb5S2XTzTTllizuyYZyG0kJ

-0-10-8 | 9-3-0 | 18-3-8 | 27-6-8
0-10-8 | 9-3-0 | 9-0-8 | 9-3-0

Scale = 1:51.0

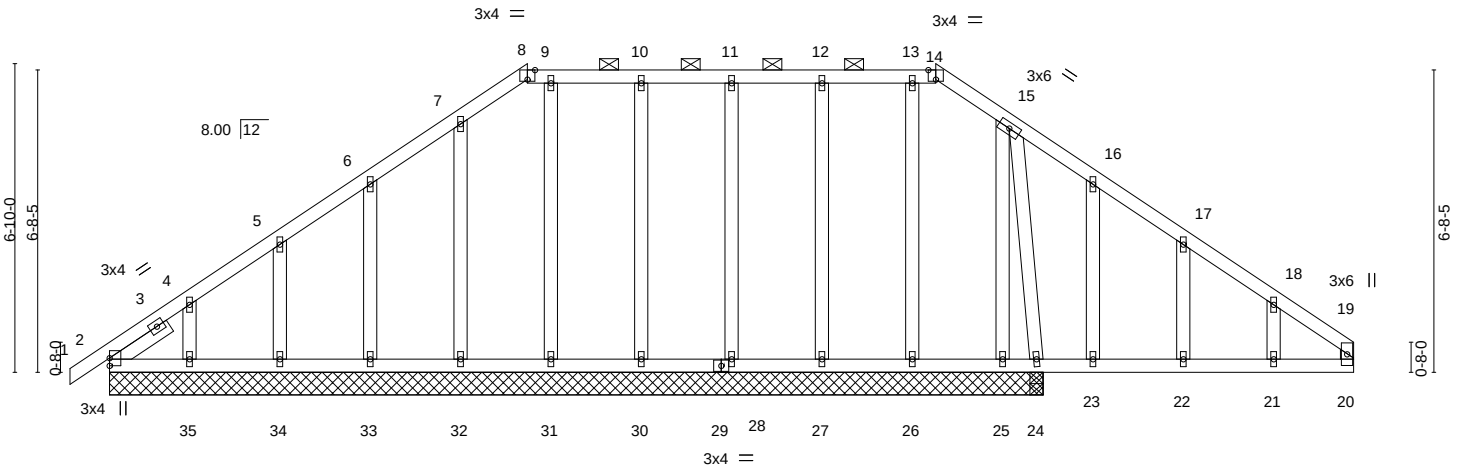

Plate Offsets (X,Y)-- [8:0-2-0,Edge], [14:0-2-0,Edge]

LOADING (psf)		SPACING-	2-0-0	CSI.		DEFL.	in	(loc)	l/defl	L/d	PLATES	GRIP
TCLL (roof)	20.0	Plate Grip DOL	1.15	TC	0.51	Vert(LL)	0.00	24-25	>999	240	MT20	197/144
Snow (Pf/Pg)	16.5/15.0	Lumber DOL	1.15	BC	0.86	Vert(CT)	-0.00	25-26	>999	180		
TCDL	10.0	Rep Stress Incr	YES	WB	0.20	Horz(CT)	-0.01	24	n/a	n/a		
BCLL	0.0 *	Code IRC2015/TPI2014		Matrix-S							Weight: 185 lb	FT = 20%
BCDL	10.0											

LUMBER-

TOP CHORD	2x4 SP No.2 or 2x4 SPF No.2
BOT CHORD	2x4 SP No.2 or 2x4 SPF No.2 *Except* 20-29: 2x4 SP No.2
WEBS	2x4 SP No.3
OTHERS	2x4 SP No.3
SLIDER	Left 2x4 SP or SPF No.2 - 1-6-5

BRACING-

TOP CHORD	Sheathed or 10-0-0 oc purlins, except end verticals, and 2-0-0 oc purlins (10-0-0 max.): 8-14.
BOT CHORD	Rigid ceiling directly applied or 6-0-0 oc bracing.

REACTIONS. All bearings 20-8-0.
(lb) - Max Horz 2=127(LC 11)
Max Uplift All uplift 100 lb or less at joint(s) 28, 30, 32, 33, 34, 35, 27 except 2=-160(LC 31), 25=-651(LC 2), 24=-229(LC 15)
Max Grav All reactions 250 lb or less at joint(s) 2, 28, 30, 32, 33, 34, 35, 27, 25 except 31=293(LC 2), 26=274(LC 31), 24=1242(LC 2), 24=976(LC 1)

FORCES. (lb) - Max. Comp./Max. Ten. - All forces 250 (lb) or less except when shown.

TOP CHORD	2-3=-106/355, 3-4=-93/366, 4-5=-45/327, 5-6=0/319, 6-7=0/325, 7-8=0/277, 15-16=0/374, 16-17=0/429, 17-18=-26/362, 18-19=-63/333
BOT CHORD	23-24=-284/70, 22-23=-284/70, 21-22=-284/70, 20-21=-284/70
WEBS	9-31=-253/0, 15-24=-310/1

NOTES-

1) Unbalanced roof live loads have been considered for this design.
2) Wind: ASCE 7-10; Vult=115mph Vasd=91mph; TCDL=6.0psf; BCDL=6.0psf; h=25ft; Cat. II; Exp B; Enclosed; MWFRS (envelope) gable end zone and C-C Corner(3) -0-10-8 to 2-1-8, Exterior(2) 2-1-8 to 9-3-0, Corner(3) 9-3-0 to 12-3-0, Exterior(2) 12-3-0 to 18-3-8, Corner(3) 18-3-8 to 21-3-8, Exterior(2) 21-3-8 to 27-4-12 zone;C-C for members and forces & MWFRS for reactions shown; Lumber DOL=1.60 plate grip DOL=1.60
3) Truss designed for wind loads in the plane of the truss only. For studs exposed to wind (normal to the face), see Standard Industry Gable End Details as applicable, or consult qualified building designer as per ANSI/TPI 1.
4) TCLL: ASCE 7-10; Pr=20.0 psf (roof live load: Lumber DOL=1.15 Plate DOL=1.15); Pg=15.0 psf (ground snow); Pf=16.5 psf (flat roof snow: Lumber DOL=1.15 Plate DOL=1.15); Category II; Exp B; Partially Exp.; Ct=1.10, Lu=50-0-0; Min. flat roof snow load governs. Rain surcharge applied to all exposed surfaces with slopes less than 0.500/12 in accordance with IBC 1608.3.4.
5) This truss has been designed for greater of min roof live load of 12.0 psf or 1.00 times flat roof load of 11.6 psf on overhangs non-concurrent with other live loads.
6) Provide adequate drainage to prevent water ponding.
7) All plates are 1.5x4 MT20 unless otherwise indicated.
8) Gable studs spaced at 2-0-0 oc.
9) This truss has been designed for a 10.0 psf bottom chord live load nonconcurrent with any other live loads.
10) * This truss has been designed for a live load of 20.0psf on the bottom chord in all areas where a rectangle 3-6-0 tall by 2-0-0 wide will fit between the bottom chord and any other members.
11) All bearings are assumed to be User Defined crushing capacity of 425 psi.
12) Provide mechanical connection (by others) of truss to bearing plate capable of withstanding 100 lb uplift at joint(s) 28, 30, 32, 33, 34, 35, 27 except (jt=lb) 2=160, 25=651, 24=229.

November 24,2020

Continued on page 2

WARNING - Verify design parameters and READ NOTES ON THIS AND INCLUDED MITEK REFERENCE PAGE MII-7473 rev. 5/19/2020 BEFORE USE.
Design valid for use only with MiTek® connectors. This design is based only upon parameters shown, and is for an individual building component, not a truss system. Before use, the building designer must verify the applicability of design parameters and properly incorporate this design into the overall building design. Bracing indicated is to prevent buckling of individual truss web and/or chord members only. Additional temporary and permanent bracing is always required for stability and to prevent collapse with possible personal injury and property damage. For general guidance regarding the fabrication, storage, delivery, erection and bracing of trusses and truss systems, see **ANSI/TPI1 Quality Criteria, DSB-89 and BCSI Building Component Safety Information** available from Truss Plate Institute, 2670 Crain Highway, Suite 203 Waldorf, MD 20601

ENGINEERING BY
TRENCO
A MiTek Affiliate
818 Soundside Road
Edenton, NC 27932

NOTES-

13) This truss is designed in accordance with the 2015 International Residential Code sections R502.11.1 and R802.10.2 and referenced standard ANSI/TPI 1.
14) Graphical purlin representation does not depict the size or the orientation of the purlin along the top and/or bottom chord.

WARNING - Verify design parameters and READ NOTES ON THIS AND INCLUDED MITEK REFERENCE PAGE MII-7473 rev. 5/19/2020 BEFORE USE.
Design valid for use only with MiTek® connectors. This design is based only upon parameters shown, and is for an individual building component, not a truss system. Before use, the building designer must verify the applicability of design parameters and properly incorporate this design into the overall building design. Bracing indicated is to prevent buckling of individual truss web and/or chord members only. Additional temporary and permanent bracing is always required for stability and to prevent collapse with possible personal injury and property damage. For general guidance regarding the fabrication, storage, delivery, erection and bracing of trusses and truss systems, see **ANSI/TPI1 Quality Criteria, DSB-89 and BCSI Building Component Safety Information** available from Truss Plate Institute, 2670 Crain Highway, Suite 203 Waldorf, MD 20601

ENGINEERING BY TRENCO A MiTek Affiliate
818 Soundside Road
Edenton, NC 27932

Job	Truss	Truss Type	Qty	Ply	KB Home 150.1910.D
150_1910_D	BG	Common Girder	1	2	I43742701 Job Reference (optional)

84 Components (Dunn), Dunn, NC - 28334, 8.430 s Nov 18 2020 MiTek Industries, Inc. Mon Nov 23 14:42:22 2020 Page 1
ID:VMD62rz1yiHD_OqRtbnrlFztQ8K-?g6FtFru78PfwPnnfTnx4CDCmBn2B8h6EH3EjLyGGfF

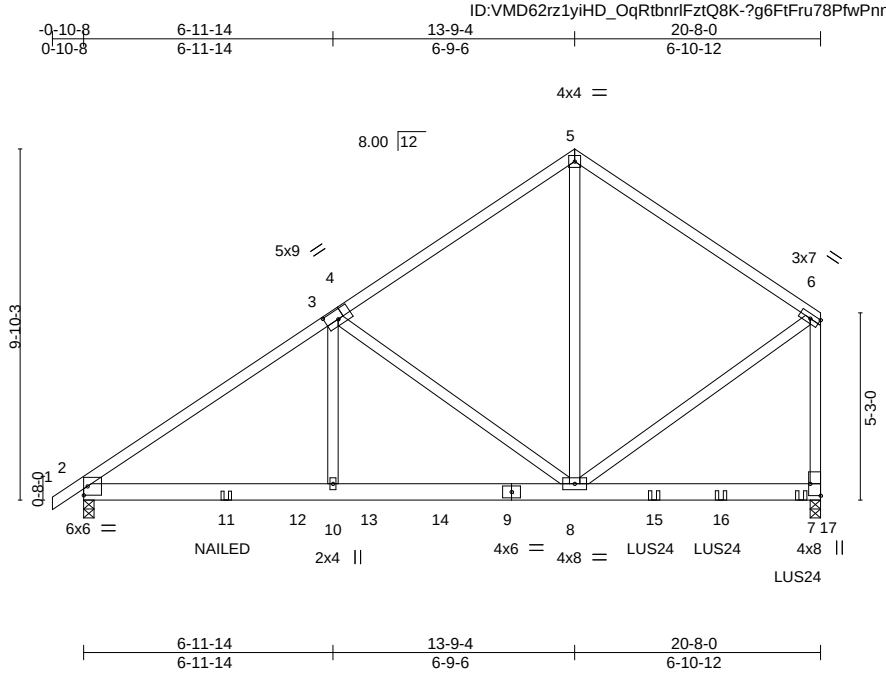

Plate Offsets (X,Y)-- [4:0-4-4,0-3-0], [7:Edge,0-3-8]

LOADING (psf)		**SPACING-** 2-0-0	**CSI.**		**DEFL.**	in	(loc)	l/defl	L/d	**PLATES**	**GRIP**
TCLL (roof)	20.0	Plate Grip DOL 1.15	TC	0.41	Vert(LL)	-0.07	7-8	>999	240	MT20	197/144
Snow (Pf/Pg)	11.6/15.0	Lumber DOL 1.15	BC	0.57	Vert(CT)	-0.11	7-8	>999	180		
TCDL	10.0	Rep Stress Incr NO	WB	0.15	Horz(CT)	0.01	7	n/a	n/a		
BCLL	0.0 *	Code IRC2015/TPI2014	Matrix-S							Weight: 276 lb	FT = 20%
BCDL	10.0										

LUMBER-
TOP CHORD 2x4 SP No.2 or 2x4 SPF No.2
BOT CHORD 2x6 SP No.2
WEBS 2x4 SP No.3

BRACING-
TOP CHORD Structural wood sheathing directly applied or 6-0-0 oc purlins, except end verticals.
BOT CHORD Rigid ceiling directly applied or 6-0-0 oc bracing.

REACTIONS. (size) 2=0-3-8, 7=0-3-8
Max Horz 2=217(LC 10)
Max Uplift 2=-310(LC 10), 7=-412(LC 10)
Max Grav 2=896(LC 53), 7=1620(LC 4)

FORCES. (lb) - Max. Comp./Max. Ten. - All forces 250 (lb) or less except when shown.
TOP CHORD 2-3=-1167/493, 3-5=-867/329, 5-6=-854/340, 6-7=-1031/353
BOT CHORD 2-10=-518/945, 8-10=-518/945
WEBS 3-10=-418/132, 3-8=-411/359, 5-8=-282/522, 6-8=-275/712

NOTES-
1) 2-ply truss to be connected together with 10d (0.131"x3") nails as follows:
Top chords connected as follows: 2x4 - 1 row at 0-9-0 oc.
Bottom chords connected as follows: 2x6 - 2 rows staggered at 0-9-0 oc.
Webs connected as follows: 2x4 - 1 row at 0-9-0 oc.
2) All loads are considered equally applied to all plies, except if noted as front (F) or back (B) face in the LOAD CASE(S) section. Ply to ply connections have been provided to distribute only loads noted as (F) or (B), unless otherwise indicated.
3) Unbalanced roof live loads have been considered for this design.
4) Wind: ASCE 7-10; Vult=115mph Vasd=91mph; TCDL=6.0psf; BCDL=6.0psf; h=25ft; Cat. II; Exp B; Enclosed; MWFRS (envelope) gable end zone; Lumber DOL=1.60 plate grip DOL=1.60
5) TCLL: ASCE 7-10; Pr=20.0 psf (roof live load: Lumber DOL=1.15 Plate DOL=1.15); Pg=15.0 psf (ground snow); Pf=11.6 psf (flat roof snow: Lumber DOL=1.15 Plate DOL=1.15); Category II; Exp B; Partially Exp.; Ct=1.10
6) This truss has been designed for greater of min roof live load of 12.0 psf or 1.00 times flat roof load of 11.6 psf on overhangs non-concurrent with other live loads.
7) This truss has been designed for a 10.0 psf bottom chord live load nonconcurrent with any other live loads.
8) * This truss has been designed for a live load of 20.0psf on the bottom chord in all areas where a rectangle 3-6-0 tall by 2-0-0 wide will fit between the bottom chord and any other members.
9) Two H2.5A Simpson Strong-Tie connectors recommended to connect truss to bearing walls due to UPLIFT at jt(s) 2. This connection is for uplift only and does not consider lateral forces.
10) LGT2 Simpson Strong-Tie connectors recommended to connect truss to bearing walls due to UPLIFT at jt(s) 7. This connection is for uplift only and does not consider lateral forces.

November 24,2020

Continued on page 2

WARNING - Verify design parameters and READ NOTES ON THIS AND INCLUDED MITEK REFERENCE PAGE MII-7473 rev. 5/19/2020 BEFORE USE.
Design valid for use only with MiTek® connectors. This design is based only upon parameters shown, and is for an individual building component, not a truss system. Before use, the building designer must verify the applicability of design parameters and properly incorporate this design into the overall building design. Bracing indicated is to prevent buckling of individual truss web and/or chord members only. Additional temporary and permanent bracing is always required for stability and to prevent collapse with possible personal injury and property damage. For general guidance regarding the fabrication, storage, delivery, erection and bracing of trusses and truss systems, see **ANSI/TPI1 Quality Criteria, DSB-89 and BCSI Building Component Safety Information** available from Truss Plate Institute, 2670 Crain Highway, Suite 203 Waldorf, MD 20601

ENGINEERING BY TRENCO A MiTek Affiliate
818 Soundside Road
Edenton, NC 27932

NOTES-

11) Use Simpson Strong-Tie LUS24 (4-10d Girder, 2-10d Truss, Single Ply Girder) or equivalent spaced at 2-3-0 oc max. starting at 16-0-0 from the left end to 20-1-8 to connect truss(es) to back face of bottom chord.
12) Fill all nail holes where hanger is in contact with lumber.
13) "NAILED" indicates 3-10d (0.148"x3") or 3-12d (0.148"x3.25") toe-nails per NDS guidlines.
14) LGT2 Hurricane ties must have two studs in line below the truss.
15) Hanger(s) or other connection device(s) shall be provided sufficient to support concentrated load(s) 139 lb up at 6-0-0, 12 lb down and 195 lb up at 8-0-0, 79 lb down and 168 lb up at 10-0-0, and 50 lb down and 284 lb up at 12-0-0, and 99 lb down and 285 lb up at 14-0-0 on bottom chord. The design/selection of such connection device(s) is the responsibility of others.

LOAD CASE(S) Standard

1) Dead + Snow (balanced): Lumber Increase=1.15, Plate Increase=1.15
   Uniform Loads (plf)
   Vert: 1-5=-43, 5-6=-43, 2-7=-20
   Concentrated Loads (lb)
   Vert: 9=-27(B) 8=-99(B) 11=62(B) 12=78(B) 13=85(B) 14=-79(B) 15=-332(B) 16=-332(B) 17=-338(B)

WARNING - Verify design parameters and READ NOTES ON THIS AND INCLUDED MITEK REFERENCE PAGE MII-7473 rev. 5/19/2020 BEFORE USE.
Design valid for use only with MiTek® connectors. This design is based only upon parameters shown, and is for an individual building component, not a truss system. Before use, the building designer must verify the applicability of design parameters and properly incorporate this design into the overall building design. Bracing indicated is to prevent buckling of individual truss web and/or chord members only. Additional temporary and permanent bracing is always required for stability and to prevent collapse with possible personal injury and property damage. For general guidance regarding the fabrication, storage, delivery, erection and bracing of trusses and truss systems, see **ANSI/TPI1 Quality Criteria, DSB-89 and BCSI Building Component Safety Information** available from Truss Plate Institute, 2670 Crain Highway, Suite 203 Waldorf, MD 20601

ENGINEERING BY TRENCO A MiTek Affiliate
818 Soundside Road
Edenton, NC 27932

Job	Truss	Truss Type	Qty	Ply	KB Home 150.1910.D
150_1910_D	CE	COMMON SUPPORTED GAB	1	1	I43742702 Job Reference (optional)

84 Components (Dunn), Dunn, NC - 28334, 8.430 s Nov 18 2020 MiTek Industries, Inc. Mon Nov 23 14:42:23 2020 Page 1
ID:VMD62rz1yiHD_OqRtbnrlFztQ8K-Tsgd4bsWtSXWXZMzDAIAcPlT5aFtwdqGTwpnFnyGGfE

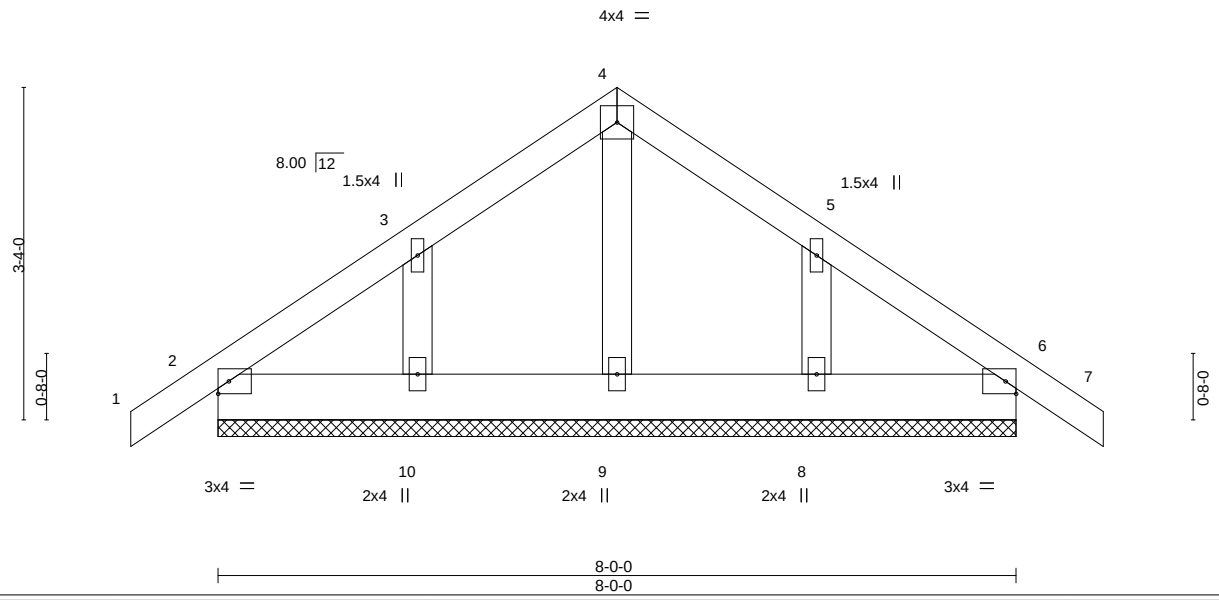

LOADING (psf)		SPACING- 2-0-0	CSI.		DEFL. in (loc) l/defl L/d	PLATES GRIP
TCLL (roof)	20.0	Plate Grip DOL 1.15	TC 0.05		Vert(LL) -0.00 6 n/r 120	MT20 197/144
Snow (Pf/Pg)	11.6/15.0	Lumber DOL 1.15	BC 0.02		Vert(CT) -0.00 7 n/r 120	
TCDL	10.0	Rep Stress Incr YES	WB 0.03		Horz(CT) 0.00 6 n/a n/a	
BCLL	0.0 *	Code IRC2015/TPI2014	Matrix-P			Weight: 44 lb FT = 20%
BCDL	10.0					

LUMBER-
TOP CHORD 2x4 SP No.2 or 2x4 SPF No.2
BOT CHORD 2x6 SP No.2
OTHERS 2x4 SP No.3

BRACING-
TOP CHORD Structural wood sheathing directly applied or 6-0-0 oc purlins.
BOT CHORD Rigid ceiling directly applied or 10-0-0 oc bracing.

REACTIONS. All bearings 8-0-0.
(lb) - Max Horz 2=63(LC 13)
Max Uplift All uplift 100 lb or less at joint(s) 2, 6, 10, 8
Max Grav All reactions 250 lb or less at joint(s) 2, 6, 9, 10, 8

FORCES. (lb) - Max. Comp./Max. Ten. - All forces 250 (lb) or less except when shown.

NOTES-
1) Unbalanced roof live loads have been considered for this design.
2) Wind: ASCE 7-10; Vult=115mph Vasd=91mph; TCDL=6.0psf; BCDL=6.0psf; h=25ft; Cat. II; Exp B; Enclosed; MWFRS (envelope) gable end zone and C-C Corner(3) -0-10-8 to 2-0-0, Exterior(2) 2-0-0 to 4-0-0, Corner(3) 4-0-0 to 7-0-0, Exterior(2) 7-0-0 to 8-10-8 zone; porch left and right exposed;C-C for members and forces & MWFRS for reactions shown; Lumber DOL=1.60 plate grip DOL=1.60
3) Truss designed for wind loads in the plane of the truss only. For studs exposed to wind (normal to the face), see Standard Industry Gable End Details as applicable, or consult qualified building designer as per ANSI/TPI 1.
4) TCLL: ASCE 7-10; Pr=20.0 psf (roof live load: Lumber DOL=1.15 Plate DOL=1.15); Pg=15.0 psf (ground snow); Pf=11.6 psf (flat roof snow: Lumber DOL=1.15 Plate DOL=1.15); Category II; Exp B; Partially Exp.; Ct=1.10
5) This truss has been designed for greater of min roof live load of 12.0 psf or 1.00 times flat roof load of 11.6 psf on overhangs non-concurrent with other live loads.
6) Gable requires continuous bottom chord bearing.
7) Gable studs spaced at 2-0-0 oc.
8) This truss has been designed for a 10.0 psf bottom chord live load nonconcurrent with any other live loads.
9) * This truss has been designed for a live load of 20.0psf on the bottom chord in all areas where a rectangle 3-6-0 tall by 2-0-0 wide will fit between the bottom chord and any other members.
10) n/a

11) Beveled plate or shim required to provide full bearing surface with truss chord at joint(s) 2.

November 24,2020

WARNING - Verify design parameters and READ NOTES ON THIS AND INCLUDED MITEK REFERENCE PAGE MII-7473 rev. 5/19/2020 BEFORE USE.
Design valid for use only with MiTek® connectors. This design is based only upon parameters shown, and is for an individual building component, not a truss system. Before use, the building designer must verify the applicability of design parameters and properly incorporate this design into the overall building design. Bracing indicated is to prevent buckling of individual truss web and/or chord members only. Additional temporary and permanent bracing is always required for stability and to prevent collapse with possible personal injury and property damage. For general guidance regarding the fabrication, storage, delivery, erection and bracing of trusses and truss systems, see **ANSI/TPI1 Quality Criteria, DSB-89 and BCSI Building Component Safety Information** available from Truss Plate Institute, 2670 Crain Highway, Suite 203 Waldorf, MD 20601

ENGINEERING BY TRENCO A MiTek Affiliate
818 Soundside Road
Edenton, NC 27932

Job	Truss	Truss Type	Qty	Ply	KB Home 150.1910.D
150_1910_D	H1	Hip	1	1	I43742703 Job Reference (optional)

84 Components (Dunn), Dunn, NC - 28334, 8.430 s Nov 18 2020 MiTek Industries, Inc. Mon Nov 23 14:42:25 2020 Page 1

ID:VMD62rz1yiHD_OqRtbnrlFztQ8K-PFoNVHumP3nEntWMKbLeiqrhfOk1OJKZwEluKgyGGfC

-0-10-8	4-1-3	8-3-0	14-6-8	16-0-10	20-10-2	24-0-0	31-11-6	39-9-0	42-2-8
0-10-8	4-1-3	4-1-13	6-3-8	1-6-2	4-9-8	3-1-14	7-11-6	7-9-10	2-5-8

Scale = 1:75.1

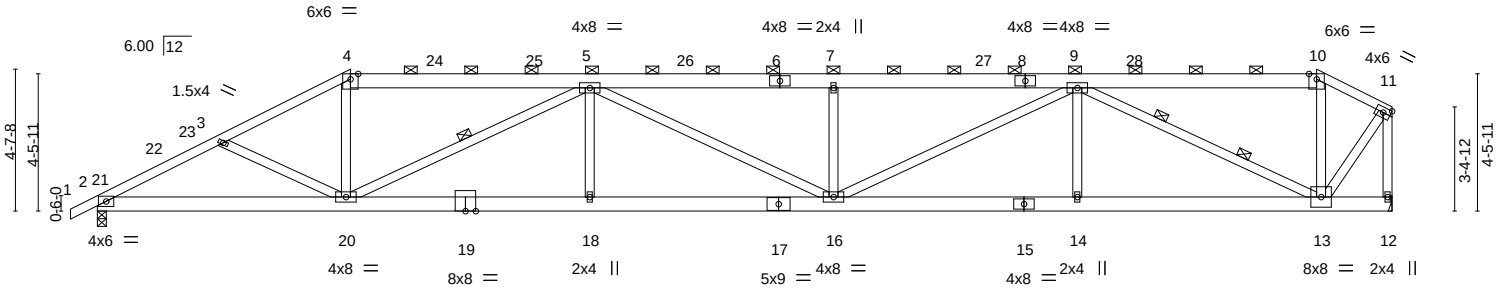

8-3-0	14-6-8	16-0-10	22-11-5	24-0-0	31-4-3	31-11-6	39-9-0	42-2-8
8-3-0	6-3-8	1-6-2	6-10-11	1-0-11	7-4-3	0-7-3	7-9-10	2-5-8

LOADING (psf)		**SPACING-** 2-0-0	**CSI.**		**DEFL.** in (loc) l/defl L/d	**PLATES**	**GRIP**
TCLL (roof)	20.0	Plate Grip DOL 1.15	TC	0.56	Vert(LL) -0.30 16-18 >999 240	MT20	197/144
Snow (Pf/Pg)	16.5/15.0	Lumber DOL 1.15	BC	0.80	Vert(CT) -0.61 16-18 >826 180		
TCDL	10.0	Rep Stress Incr YES	WB	0.92	Horz(CT) 0.15 12 n/a n/a		
BCLL	0.0 *	Code IRC2015/TPI2014	Matrix-S			Weight: 285 lb	FT = 20%
BCDL	10.0						

LUMBER-

TOP CHORD 2x6 SP No.2 *Except*
1-4,10-11: 2x4 SP No.2 or 2x4 SPF No.2
BOT CHORD 2x6 SP No.2
WEBS 2x4 SP No.3

BRACING-

TOP CHORD Structural wood sheathing directly applied or 3-0-12 oc purlins, except end verticals, and 2-0-0 oc purlins (3-2-14 max.): 4-10.
BOT CHORD Rigid ceiling directly applied or 10-0-0 oc bracing.
WEBS 1 Row at midpt 5-20
2 Rows at 1/3 pts 9-13

REACTIONS. (size) 2=0-3-8, 12=Mechanical
Max Horz 2=115(LC 16)
Max Uplift 2=-43(LC 13), 12=-88(LC 12)
Max Grav 2=1739(LC 2), 12=1677(LC 38)

FORCES. (lb) - Max. Comp./Max. Ten. - All forces 250 (lb) or less except when shown.
TOP CHORD 2-3=-3177/209, 3-4=-3044/161, 4-5=-2673/169, 5-7=-4362/308, 7-9=-4362/308, 9-10=-921/71, 10-11=-999/58, 11-12=-1697/84
BOT CHORD 2-20=-240/2740, 18-20=-286/4225, 16-18=-286/4225, 14-16=-232/3360, 13-14=-232/3360
WEBS 4-20=0/974, 7-16=-460/138, 9-14=0/317, 9-13=-2738/211, 11-13=-73/1589, 5-18=0/306, 9-16=-77/1203, 5-20=-1815/189

NOTES-

1) Unbalanced roof live loads have been considered for this design.
2) Wind: ASCE 7-10; Vult=115mph Vasd=91mph; TCDL=6.0psf; BCDL=6.0psf; h=25ft; Cat. II; Exp B; Enclosed; MWFRS (envelope) gable end zone and C-C Exterior(2) -0-10-8 to 3-4-2, Interior(1) 3-4-2 to 8-3-0, Exterior(2) 8-3-0 to 14-2-10, Interior(1) 14-2-10 to 39-9-0, Exterior(2) 39-9-0 to 42-0-12 zone;C-C for members and forces & MWFRS for reactions shown; Lumber DOL=1.60 plate grip DOL=1.60
3) TCLL: ASCE 7-10; Pr=20.0 psf (roof live load: Lumber DOL=1.15 Plate DOL=1.15); Pg=15.0 psf (ground snow); Pf=16.5 psf (flat roof snow: Lumber DOL=1.15 Plate DOL=1.15); Category II; Exp B; Partially Exp.; Ct=1.10, Lu=50-0-0; Min. flat roof snow load governs. Rain surcharge applied to all exposed surfaces with slopes less than 0.500/12 in accordance with IBC 1608.3.4.
4) Unbalanced snow loads have been considered for this design.
5) This truss has been designed for greater of min roof live load of 12.0 psf or 1.00 times flat roof load of 11.6 psf on overhangs non-concurrent with other live loads.
6) Provide adequate drainage to prevent water ponding.
7) This truss has been designed for a 10.0 psf bottom chord live load nonconcurrent with any other live loads.
8) * This truss has been designed for a live load of 20.0psf on the bottom chord in all areas where a rectangle 3-6-0 tall by 2-0-0 wide will fit between the bottom chord and any other members.
9) Refer to girder(s) for truss to truss connections.
10) Provide mechanical connection (by others) of truss to bearing plate capable of withstanding 100 lb uplift at joint(s) 12.
11) One RT7A USP connectors recommended to connect truss to bearing walls due to UPLIFT at jt(s) 2. This connection is for uplift only and does not consider lateral forces.
12) Graphical purlin representation does not depict the size or the orientation of the purlin along the top and/or bottom chord.

November 24,2020

WARNING - Verify design parameters and READ NOTES ON THIS AND INCLUDED MITEK REFERENCE PAGE MII-7473 rev. 5/19/2020 BEFORE USE.
Design valid for use only with MiTek® connectors. This design is based only upon parameters shown, and is for an individual building component, not a truss system. Before use, the building designer must verify the applicability of design parameters and properly incorporate this design into the overall building design. Bracing indicated is to prevent buckling of individual truss web and/or chord members only. Additional temporary and permanent bracing is always required for stability and to prevent collapse with possible personal injury and property damage. For general guidance regarding the fabrication, storage, delivery, erection and bracing of trusses and truss systems, see **ANSI/TPI1 Quality Criteria, DSB-89 and BCSI Building Component Safety Information** available from Truss Plate Institute, 2670 Crain Highway, Suite 203 Waldorf, MD 20601

ENGINEERING BY TRENCO A MiTek Affiliate
818 Soundside Road
Edenton, NC 27932

Job	Truss	Truss Type	Qty	Ply	KB Home 150.1910.D
150_1910_D	H2	Hip	1	1	I43742704 Job Reference (optional)

84 Components (Dunn), Dunn, NC - 28334, 8.430 s Nov 18 2020 MiTek Industries, Inc. Mon Nov 23 14:42:28 2020 Page 1

ID:VMD62rz1yiHD_OqRtbnrlFztQ8K-qqUW7Iwfi_9oeKFx?kuLJTT9rbnubhN?cCWYw?yGGf9

-0-10-8	2-3-8	6-2-12	10-11-0	19-7-1	28-4-15	37-1-0	42-2-8
0-10-8	2-3-8	3-11-4	4-8-4	8-8-1	8-9-14	8-8-1	5-1-8

Scale = 1:75.1

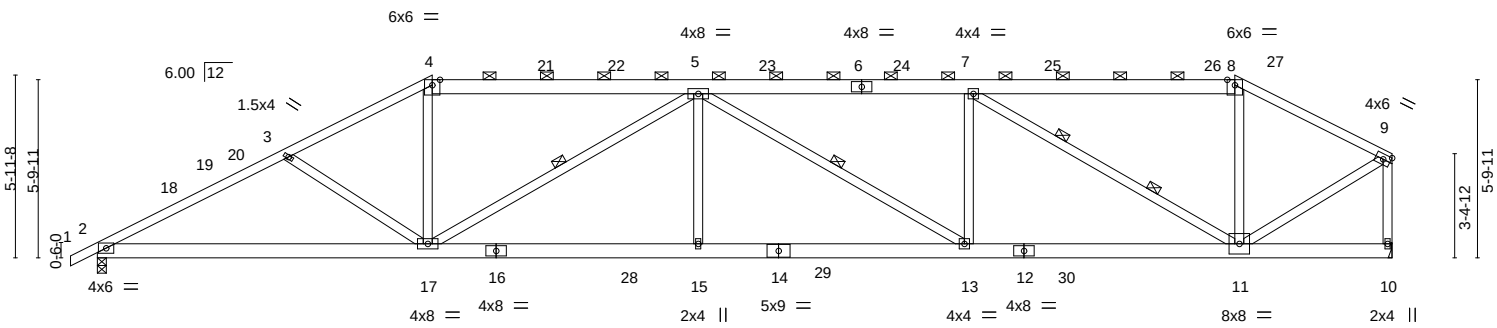

2-3-8	6-2-12	10-11-0	19-7-1	28-4-15	37-1-0	42-2-8
2-3-8	3-11-4	4-8-4	8-8-1	8-9-14	8-8-1	5-1-8

LOADING (psf)		**SPACING-** 2-0-0	**CSI.**		**DEFL.** in (loc) l/defl L/d	**PLATES**	**GRIP**
TCLL (roof)	20.0	Plate Grip DOL 1.15	TC	0.75	Vert(LL) -0.20 13-15 >999 240	MT20	197/144
Snow (Pf/Pg)	16.5/15.0	Lumber DOL 1.15	BC	0.73	Vert(CT) -0.42 13-15 >999 180		
TCDL	10.0	Rep Stress Incr YES	WB	0.84	Horz(CT) 0.12 10 n/a n/a		
BCLL	0.0 *	Code IRC2015/TPI2014	Matrix-S			Weight: 282 lb	FT = 20%
BCDL	10.0						

LUMBER-

TOP CHORD 2x4 SP No.2 or 2x4 SPF No.2 *Except* 6-8,4-6: 2x6 SP No.2

BOT CHORD 2x6 SP No.2

WEBS 2x4 SP No.3

BRACING-

TOP CHORD Structural wood sheathing directly applied or 2-5-3 oc purlins, except end verticals, and 2-0-0 oc purlins (3-2-4 max.): 4-8.

BOT CHORD Rigid ceiling directly applied or 10-0-0 oc bracing.

WEBS 1 Row at midpt 5-13, 5-17

2 Rows at 1/3 pts 7-11

REACTIONS. (size) 10=Mechanical, 2=0-3-8

Max Horz 2=133(LC 16)

Max Uplift 10=-45(LC 12), 2=-12(LC 13)

Max Grav 10=1676(LC 2), 2=1739(LC 2)

FORCES. (lb) - Max. Comp./Max. Ten. - All forces 250 (lb) or less except when shown.

TOP CHORD 2-3=-3125/218, 3-4=-2855/176, 4-5=-2496/184, 5-7=-3094/202, 7-8=-1392/132, 8-9=-1573/115, 9-10=-1642/121

BOT CHORD 2-17=-221/2692, 15-17=-190/3439, 13-15=-190/3439, 11-13=-166/3094

WEBS 4-17=0/872, 5-15=0/327, 5-13=-464/32, 7-13=0/532, 7-11=-1995/149, 8-11=0/378, 9-11=-54/1642, 5-17=-1172/160, 3-17=-356/156

NOTES-

1) Unbalanced roof live loads have been considered for this design.
2) Wind: ASCE 7-10; Vult=115mph Vasd=91mph; TCDL=6.0psf; BCDL=6.0psf; h=25ft; Cat. II; Exp B; Enclosed; MWFRS (envelope) gable end zone and C-C Exterior(2) -0-10-8 to 3-4-2, Interior(1) 3-4-2 to 10-11-0, Exterior(2) 10-11-0 to 16-10-10, Interior(1) 16-10-10 to 37-1-0, Exterior(2) 37-1-0 to 42-0-12 zone;C-C for members and forces & MWFRS for reactions shown; Lumber DOL=1.60 plate grip DOL=1.60
3) TCLL: ASCE 7-10; Pr=20.0 psf (roof live load: Lumber DOL=1.15 Plate DOL=1.15); Pg=15.0 psf (ground snow); Pf=16.5 psf (flat roof snow: Lumber DOL=1.15 Plate DOL=1.15); Category II; Exp B; Partially Exp.; Ct=1.10, Lu=50-0-0; Min. flat roof snow load governs. Rain surcharge applied to all exposed surfaces with slopes less than 0.500/12 in accordance with IBC 1608.3.4.
4) Unbalanced snow loads have been considered for this design.
5) This truss has been designed for greater of min roof live load of 12.0 psf or 1.00 times flat roof load of 11.6 psf on overhangs non-concurrent with other live loads.
6) Provide adequate drainage to prevent water ponding.
7) This truss has been designed for a 10.0 psf bottom chord live load nonconcurrent with any other live loads.
8) * This truss has been designed for a live load of 20.0psf on the bottom chord in all areas where a rectangle 3-6-0 tall by 2-0-0 wide will fit between the bottom chord and any other members, with BCDL = 10.0psf.
9) Refer to girder(s) for truss to truss connections.
10) Provide mechanical connection (by others) of truss to bearing plate capable of withstanding 100 lb uplift at joint(s) 10.
11) One H2.5A Simpson Strong-Tie connectors recommended to connect truss to bearing walls due to UPLIFT at jt(s) 2. This connection is for uplift only and does not consider lateral forces.
12) Graphical purlin representation does not depict the size or the orientation of the purlin along the top and/or bottom chord.

November 24,2020

WARNING - Verify design parameters and READ NOTES ON THIS AND INCLUDED MITEK REFERENCE PAGE MII-7473 rev. 5/19/2020 BEFORE USE.
Design valid for use only with MiTek® connectors. This design is based only upon parameters shown, and is for an individual building component, not a truss system. Before use, the building designer must verify the applicability of design parameters and properly incorporate this design into the overall building design. Bracing indicated is to prevent buckling of individual truss web and/or chord members only. Additional temporary and permanent bracing is always required for stability and to prevent collapse with possible personal injury and property damage. For general guidance regarding the fabrication, storage, delivery, erection and bracing of trusses and truss systems, see **ANSI/TPI1 Quality Criteria, DSB-89 and BCSI Building Component Safety Information** available from Truss Plate Institute, 2670 Crain Highway, Suite 203 Waldorf, MD 20601

ENGINEERING BY TRENCO A MiTek Affiliate
818 Soundside Road
Edenton, NC 27932

Job	Truss	Truss Type	Qty	Ply	KB Home 150.1910.D
150_1910_D	H3	HIP	1	1	I43742705 Job Reference (optional)

84 Components (Dunn), Dunn, NC - 28334, 8.430 s Nov 18 2020 MiTek Industries, Inc. Mon Nov 23 14:42:30 2020 Page 1
ID:VMD62rz1yiHD_OqRtbnrIFztQ8K-mCbGY_yvEbPWtePJ78xpPuYVMPRR3bnI4W?f?tyGGf7

-0-10-8	5-9-8	13-7-0	20-2-8	27-9-8	34-5-0	42-2-8
0-10-8	5-9-8	7-9-8	6-7-8	7-7-0	6-7-8	7-9-8

Scale = 1:76.5

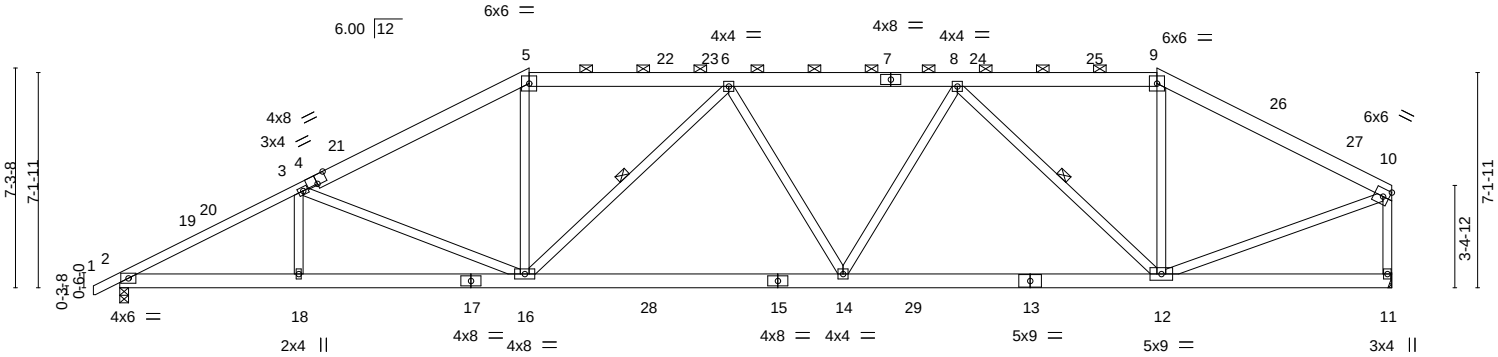

5-9-8	13-7-0	24-0-0	34-5-0	42-2-8
5-9-8	7-9-8	10-5-0	10-5-0	7-9-8

Plate Offsets (X,Y)-- [4:0-4-0,Edge]

LOADING (psf)		**SPACING-** 2-0-0	**CSI.**		**DEFL.** in (loc) l/defl L/d	**PLATES**	**GRIP**
TCLL (roof)	20.0	Plate Grip DOL 1.15	TC	0.69	Vert(LL) -0.18 14-16 >999 240	MT20	197/144
Snow (Pf/Pg)	16.5/15.0	Lumber DOL 1.15	BC	0.79	Vert(CT) -0.36 14-16 >999 180		
TCDL	10.0	Rep Stress Incr YES	WB	0.78	Horz(CT) 0.09 11 n/a n/a		
BCLL	0.0 *	Code IRC2015/TPI2014	Matrix-S			Weight: 297 lb	FT = 20%
BCDL	10.0						

LUMBER-
TOP CHORD 2x6 SP No.2 *Except*
1-4: 2x4 SP No.2 or 2x4 SPF No.2
BOT CHORD 2x6 SP No.2
WEBS 2x4 SP No.3

BRACING-
TOP CHORD Structural wood sheathing directly applied or 2-9-13 oc purlins, except end verticals, and 2-0-0 oc purlins (4-2-11 max.): 5-9.
BOT CHORD Rigid ceiling directly applied or 10-0-0 oc bracing.
WEBS 1 Row at midpt 6-16, 8-12

REACTIONS. (size) 2=0-3-8, 11=Mechanical
Max Horz 2=147(LC 16)
Max Uplift 2=-9(LC 16)
Max Grav 2=1737(LC 2), 11=1676(LC 2)

FORCES. (lb) - Max. Comp./Max. Ten. - All forces 250 (lb) or less except when shown.
TOP CHORD 2-3=-3205/162, 3-5=-2675/179, 5-6=-2306/204, 6-8=-2672/183, 8-9=-1586/155, 9-10=-1867/133, 10-11=-1613/133
BOT CHORD 2-18=-174/2763, 16-18=-174/2763, 14-16=-119/2728, 12-14=-107/2494
WEBS 6-16=-701/139, 8-14=0/499, 8-12=-1280/127, 9-12=0/501, 10-12=-35/1684, 5-16=0/795, 3-16=-626/139

NOTES-
1) Unbalanced roof live loads have been considered for this design.
2) Wind: ASCE 7-10; Vult=115mph Vasd=91mph; TCDL=6.0psf; BCDL=6.0psf; h=25ft; Cat. II; Exp B; Enclosed; MWFRS (envelope) gable end zone and C-C Exterior(2) -0-10-1 to 3-4-9, Interior(1) 3-4-9 to 13-7-0, Exterior(2) 13-7-0 to 19-6-10, Interior(1) 19-6-10 to 34-5-0, Exterior(2) 34-5-0 to 40-4-10, Interior(1) 40-4-10 to 42-0-12 zone;C-C for members and forces & MWFRS for reactions shown; Lumber DOL=1.60 plate grip DOL=1.60
3) TCLL: ASCE 7-10; Pr=20.0 psf (roof live load: Lumber DOL=1.15 Plate DOL=1.15); Pg=15.0 psf (ground snow); Pf=16.5 psf (flat roof snow: Lumber DOL=1.15 Plate DOL=1.15); Category II; Exp B; Partially Exp.; Ct=1.10, Lu=50-0-0; Min. flat roof snow load governs. Rain surcharge applied to all exposed surfaces with slopes less than 0.500/12 in accordance with IBC 1608.3.4.
4) Unbalanced snow loads have been considered for this design.
5) This truss has been designed for greater of min roof live load of 12.0 psf or 1.00 times flat roof load of 11.6 psf on overhangs non-concurrent with other live loads.
6) Provide adequate drainage to prevent water ponding.
7) This truss has been designed for a 10.0 psf bottom chord live load nonconcurrent with any other live loads.
8) * This truss has been designed for a live load of 20.0psf on the bottom chord in all areas where a rectangle 3-6-0 tall by 2-0-0 wide will fit between the bottom chord and any other members, with BCDL = 10.0psf.
9) Refer to girder(s) for truss to truss connections.
10) One RT7A USP connectors recommended to connect truss to bearing walls due to UPLIFT at jt(s) 2. This connection is for uplift only and does not consider lateral forces.
11) Graphical purlin representation does not depict the size or the orientation of the purlin along the top and/or bottom chord.

November 24,2020

WARNING - Verify design parameters and READ NOTES ON THIS AND INCLUDED MITEK REFERENCE PAGE MII-7473 rev. 5/19/2020 BEFORE USE.
Design valid for use only with MiTek® connectors. This design is based only upon parameters shown, and is for an individual building component, not a truss system. Before use, the building designer must verify the applicability of design parameters and properly incorporate this design into the overall building design. Bracing indicated is to prevent buckling of individual truss web and/or chord members only. Additional temporary and permanent bracing is always required for stability and to prevent collapse with possible personal injury and property damage. For general guidance regarding the fabrication, storage, delivery, erection and bracing of trusses and truss systems, see **ANSI/TPI1 Quality Criteria, DSB-89 and BCSI Building Component Safety Information** available from Truss Plate Institute, 2670 Crain Highway, Suite 203 Waldorf, MD 20601

ENGINEERING BY TRENCO A MiTek Affiliate
818 Soundside Road
Edenton, NC 27932

Job	Truss	Truss Type	Qty	Ply	KB Home 150.1910.D
150_1910_D	H4	Hip	1	1	I43742706 Job Reference (optional)

84 Components (Dunn), Dunn, NC - 28334, 8.430 s Nov 18 2020 MiTek Industries, Inc. Mon Nov 23 14:42:31 2020 Page 1
ID:VMD62rz1yiHD_OqRtbnrlFztQ8K-ibj0zgz9mDfE6xYiEZzHUJdteD9FXX0bXqUl3nyGGf5

-0-10-8	5-9-8	11-2-0	16-3-0	24-0-0	31-9-0	36-10-0	42-2-8
0-10-8	5-9-8	5-4-8	5-1-0	7-9-0	7-9-0	5-1-0	5-4-8

Scale = 1:76.5

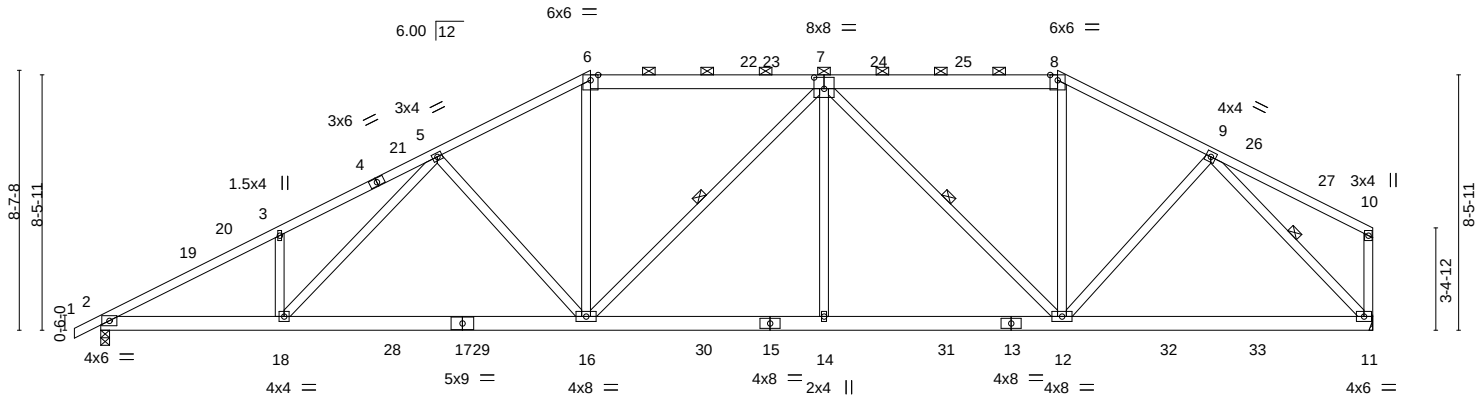

5-9-8	11-2-0	14-6-8	16-3-0	24-0-0	31-9-0	36-10-0	42-2-8
5-9-8	5-4-8	3-4-8	1-8-8	7-9-0	7-9-0	5-1-0	5-4-8

Plate Offsets (X,Y)-- [7:0-4-0,0-4-8]

LOADING (psf)		**SPACING-** 2-0-0	**CSI.**		**DEFL.**	in	(loc)	l/defl	L/d	**PLATES**	**GRIP**
TCLL (roof)	20.0	Plate Grip DOL 1.15	TC	0.57	Vert(LL)	-0.18	16-18	>999	240	MT20	197/144
Snow (Pf/Pg)	16.5/15.0	Lumber DOL 1.15	BC	0.70	Vert(CT)	-0.37	16-18	>999	180		
TCDL	10.0	Rep Stress Incr YES	WB	0.67	Horz(CT)	0.09	11	n/a	n/a		
BCLL	0.0 *	Code IRC2015/TPI2014	Matrix-S							Weight: 299 lb	FT = 20%
BCDL	10.0										

LUMBER-
TOP CHORD 2x4 SP No.2 or 2x4 SPF No.2 *Except* 7-8,6-7: 2x6 SP No.2
BOT CHORD 2x6 SP No.2
WEBS 2x4 SP No.3

BRACING-
TOP CHORD Structural wood sheathing directly applied or 2-7-9 oc purlins, except end verticals, and 2-0-0 oc purlins (4-8-15 max.): 6-8.
BOT CHORD Rigid ceiling directly applied or 10-0-0 oc bracing.
WEBS 1 Row at midpt 7-16, 7-12, 9-11

REACTIONS. (size) 2=0-3-8, 11=Mechanical
Max Horz 2=168(LC 16)
Max Uplift 2=-29(LC 16)
Max Grav 2=1739(LC 2), 11=1705(LC 3)

FORCES. (lb) - Max. Comp./Max. Ten. - All forces 250 (lb) or less except when shown.
TOP CHORD 2-3=-3221/121, 3-5=-3169/192, 5-6=-2434/199, 6-7=-2132/206, 7-8=-1684/171, 8-9=-1933/169
BOT CHORD 2-18=-136/2783, 16-18=-144/2410, 14-16=-79/2296, 12-14=-79/2296, 11-12=-81/1367
WEBS 6-16=0/770, 7-16=-401/117, 7-14=0/356, 7-12=-932/90, 8-12=0/549, 9-12=0/583, 9-11=-1948/127, 5-16=-567/151, 3-18=-253/147, 5-18=-66/569

NOTES-
1) Unbalanced roof live loads have been considered for this design.
2) Wind: ASCE 7-10; Vult=115mph Vasd=91mph; TCDL=6.0psf; BCDL=6.0psf; h=25ft; Cat. II; Exp B; Enclosed; MWFRS (envelope) gable end zone and C-C Exterior(2) -0-10-8 to 3-4-2, Interior(1) 3-4-2 to 16-3-0, Exterior(2) 16-3-0 to 22-2-10, Interior(1) 22-2-10 to 31-9-0, Exterior(2) 31-9-0 to 37-8-10, Interior(1) 37-8-10 to 42-0-12 zone;C-C for members and forces & MWFRS for reactions shown; Lumber DOL=1.60 plate grip DOL=1.60
3) TCLL: ASCE 7-10; Pr=20.0 psf (roof live load: Lumber DOL=1.15 Plate DOL=1.15); Pg=15.0 psf (ground snow); Pf=16.5 psf (flat roof snow: Lumber DOL=1.15 Plate DOL=1.15); Category II; Exp B; Partially Exp.; Ct=1.10, Lu=50-0-0; Min. flat roof snow load governs. Rain surcharge applied to all exposed surfaces with slopes less than 0.500/12 in accordance with IBC 1608.3.4.
4) Unbalanced snow loads have been considered for this design.
5) This truss has been designed for greater of min roof live load of 12.0 psf or 1.00 times flat roof load of 11.6 psf on overhangs non-concurrent with other live loads.
6) Provide adequate drainage to prevent water ponding.
7) This truss has been designed for a 10.0 psf bottom chord live load nonconcurrent with any other live loads.
8) * This truss has been designed for a live load of 20.0psf on the bottom chord in all areas where a rectangle 3-6-0 tall by 2-0-0 wide will fit between the bottom chord and any other members, with BCDL = 10.0psf.
9) Refer to girder(s) for truss to truss connections.
10) One RT7A USP connectors recommended to connect truss to bearing walls due to UPLIFT at jt(s) 2. This connection is for uplift only and does not consider lateral forces.
11) Graphical purlin representation does not depict the size or the orientation of the purlin along the top and/or bottom chord.

November 24,2020

WARNING - Verify design parameters and READ NOTES ON THIS AND INCLUDED MITEK REFERENCE PAGE MII-7473 rev. 5/19/2020 BEFORE USE.
Design valid for use only with MiTek® connectors. This design is based only upon parameters shown, and is for an individual building component, not a truss system. Before use, the building designer must verify the applicability of design parameters and properly incorporate this design into the overall building design. Bracing indicated is to prevent buckling of individual truss web and/or chord members only. Additional temporary and permanent bracing is always required for stability and to prevent collapse with possible personal injury and property damage. For general guidance regarding the fabrication, storage, delivery, erection and bracing of trusses and truss systems, see **ANSI/TPI1 Quality Criteria, DSB-89 and BCSI Building Component Safety Information** available from Truss Plate Institute, 2670 Crain Highway, Suite 203 Waldorf, MD 20601

ENGINEERING BY TRENCO A MiTek Affiliate
818 Soundside Road
Edenton, NC 27932

Job	Truss	Truss Type	Qty	Ply	KB Home 150.1910.D
150_1910_D	H5	Hip	1	1	I43742707 Job Reference (optional)

84 Components (Dunn), Dunn, NC - 28334, 8.430 s Nov 18 2020 MiTek Industries, Inc. Mon Nov 23 14:42:34 2020 Page 1

ID:VMD62rz1yiHD_OqRtbnrlFztQ8K-f_rnOM?QIqvyMFi5M_?lZkjAy0ru?OYt?8zs8fyGGf3

-0-10-8	6-1-0	12-8-4	18-11-0	24-0-0	29-1-0	35-3-12	42-2-8
0-10-8	6-1-0	6-7-4	6-2-12	5-1-0	5-1-0	6-2-12	6-10-12

Scale = 1:75.1

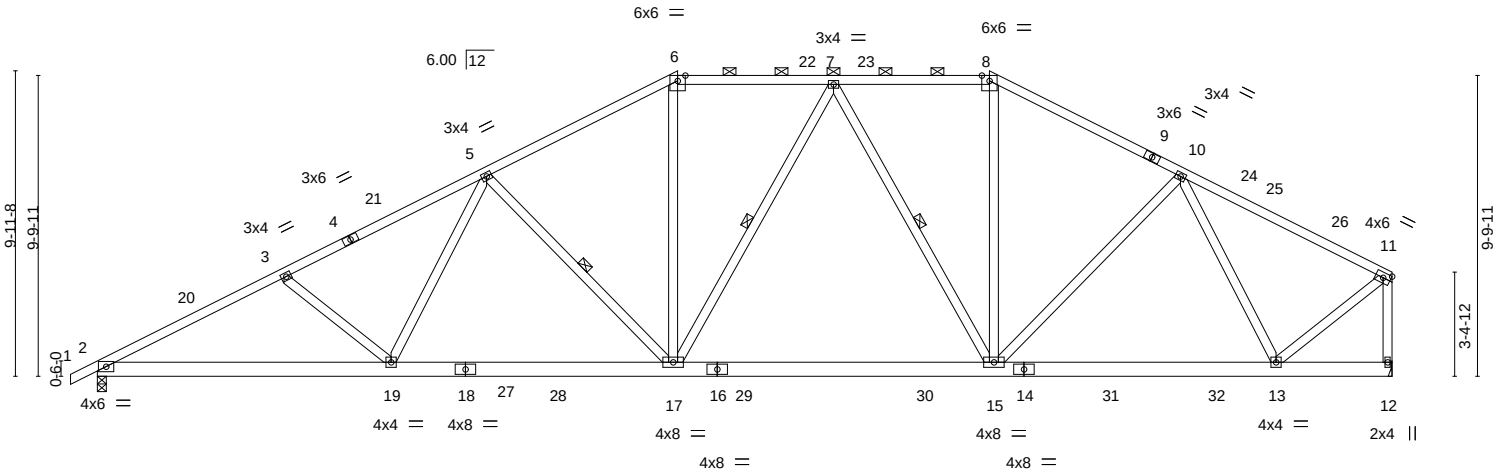

9-6-15	18-11-0	24-0-0	29-1-0	35-3-12	38-5-2	42-2-8
9-6-15	9-4-1	5-1-0	5-1-0	6-2-12	3-1-6	3-9-6

LOADING (psf)		**SPACING-** 2-0-0	**CSI.**		**DEFL.** in (loc) l/defl L/d	**PLATES**	**GRIP**
TCLL (roof)	20.0	Plate Grip DOL 1.15	TC	0.71	Vert(LL) -0.19 15-17 >999 240	MT20	197/144
Snow (Pf/Pg)	16.5/15.0	Lumber DOL 1.15	BC	0.69	Vert(CT) -0.35 15-17 >999 180		
TCDL	10.0	Rep Stress Incr YES	WB	0.86	Horz(CT) 0.08 12 n/a n/a		
BCLL	0.0 *	Code IRC2015/TPI2014	Matrix-S			Weight: 290 lb	FT = 20%
BCDL	10.0						

LUMBER-
TOP CHORD 2x4 SP No.2 or 2x4 SPF No.2
BOT CHORD 2x6 SP No.2
WEBS 2x4 SP No.3

BRACING-
TOP CHORD Structural wood sheathing directly applied or 2-9-4 oc purlins, except end verticals, and 2-0-0 oc purlins (4-0-8 max.): 6-8.
BOT CHORD Rigid ceiling directly applied or 10-0-0 oc bracing.
WEBS 1 Row at midpt 5-17, 7-17, 7-15

REACTIONS. (size) 2=0-3-8, 12=Mechanical
Max Horz 2=185(LC 16)
Max Uplift 2=-46(LC 16)
Max Grav 2=1739(LC 2), 12=1685(LC 3)

FORCES. (lb) - Max. Comp./Max. Ten. - All forces 250 (lb) or less except when shown.
TOP CHORD 2-3=-3154/156, 3-5=-2887/157, 5-6=-2211/202, 6-7=-1908/213, 7-8=-1657/193, 8-10=-1932/186, 10-11=-1358/94, 11-12=-1676/95
BOT CHORD 2-19=-194/2721, 17-19=-122/2322, 15-17=-53/1869, 13-15=-73/1521
WEBS 3-19=-300/156, 5-19=0/498, 5-17=-725/160, 6-17=0/707, 7-15=-571/90, 8-15=-6/586, 10-15=-9/343, 11-13=-20/1471, 10-13=-874/114

NOTES-
1) Unbalanced roof live loads have been considered for this design.
2) Wind: ASCE 7-10; Vult=115mph Vasd=91mph; TCDL=6.0psf; BCDL=6.0psf; h=25ft; Cat. II; Exp B; Enclosed; MWFRS (envelope) gable end zone and C-C Exterior(2) -0-10-8 to 3-4-2, Interior(1) 3-4-2 to 18-11-0, Exterior(2) 18-11-0 to 24-10-10, Interior(1) 24-10-10 to 29-1-0, Exterior(2) 29-1-0 to 35-3-12, Interior(1) 35-3-12 to 42-0-12 zone;C-C for members and forces & MWFRS for reactions shown; Lumber DOL=1.60 plate grip DOL=1.60
3) TCLL: ASCE 7-10; Pr=20.0 psf (roof live load: Lumber DOL=1.15 Plate DOL=1.15); Pg=15.0 psf (ground snow); Pf=16.5 psf (flat roof snow: Lumber DOL=1.15 Plate DOL=1.15); Category II; Exp B; Partially Exp.; Ct=1.10, Lu=50-0-0; Min. flat roof snow load governs. Rain surcharge applied to all exposed surfaces with slopes less than 0.500/12 in accordance with IBC 1608.3.4.
4) Unbalanced snow loads have been considered for this design.
5) This truss has been designed for greater of min roof live load of 12.0 psf or 1.00 times flat roof load of 11.6 psf on overhangs non-concurrent with other live loads.
6) Provide adequate drainage to prevent water ponding.
7) This truss has been designed for a 10.0 psf bottom chord live load nonconcurrent with any other live loads.
8) * This truss has been designed for a live load of 20.0psf on the bottom chord in all areas where a rectangle 3-6-0 tall by 2-0-0 wide will fit between the bottom chord and any other members, with BCDL = 10.0psf.
9) Refer to girder(s) for truss to truss connections.
10) One RT7A USP connectors recommended to connect truss to bearing walls due to UPLIFT at jt(s) 2. This connection is for uplift only and does not consider lateral forces.
11) Graphical purlin representation does not depict the size or the orientation of the purlin along the top and/or bottom chord.

November 24,2020

WARNING - Verify design parameters and READ NOTES ON THIS AND INCLUDED MITEK REFERENCE PAGE MII-7473 rev. 5/19/2020 BEFORE USE.
Design valid for use only with MiTek® connectors. This design is based only upon parameters shown, and is for an individual building component, not a truss system. Before use, the building designer must verify the applicability of design parameters and properly incorporate this design into the overall building design. Bracing indicated is to prevent buckling of individual truss web and/or chord members only. Additional temporary and permanent bracing is always required for stability and to prevent collapse with possible personal injury and property damage. For general guidance regarding the fabrication, storage, delivery, erection and bracing of trusses and truss systems, see **ANSI/TPI1 Quality Criteria, DSB-89 and BCSI Building Component Safety Information** available from Truss Plate Institute, 2670 Crain Highway, Suite 203 Waldorf, MD 20601

ENGINEERING BY TRENCO A MiTek Affiliate
818 Soundside Road
Edenton, NC 27932

Job	Truss	Truss Type	Qty	Ply	KB Home 150.1910.D
150_1910_D	H6	HALF HIP	1	1	I43742708 Job Reference (optional)

84 Components (Dunn), Dunn, NC - 28334, 8.430 s Nov 18 2020 MiTek Industries, Inc. Mon Nov 23 14:42:35 2020 Page 1

ID:VMD62rz1yiHD_OqRtbnrlFztQ8K-7AP9bh?2382pzPHHwiW_6xFJaQ8wkxf1DojQg5yGGf2

-0-10-8	4-2-15	8-3-0	15-3-2	22-3-4	29-3-6	36-7-0
0-10-8	4-2-15	4-0-1	7-0-2	7-0-2	7-0-2	7-3-10

Scale: 3/16"=1'

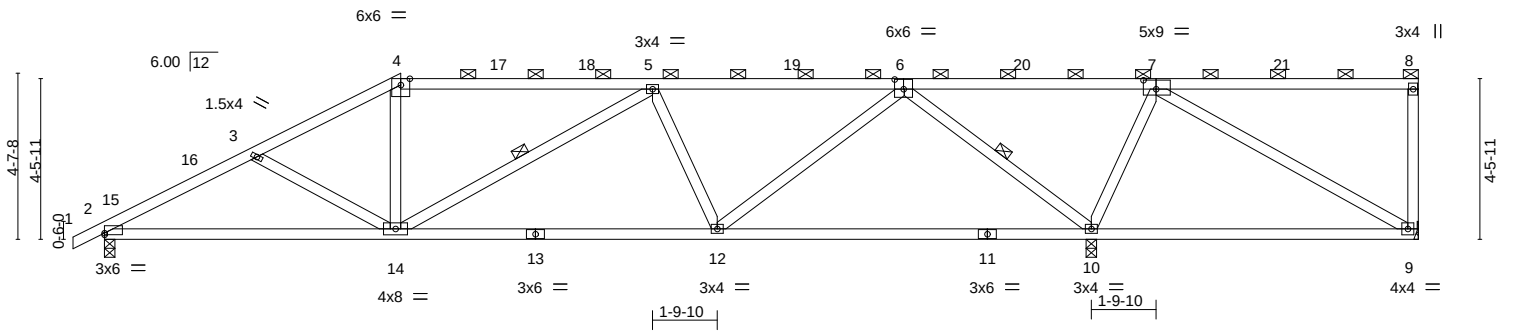

8-3-0	17-0-12	27-5-12	36-7-0
8-3-0	8-9-12	10-5-0	9-1-4

Plate Offsets (X,Y)-- [2:0-0-0,0-0-9], [6:0-3-0,0-3-4], [7:0-4-4,0-3-0]

LOADING (psf)		SPACING- 2-0-0	CSI.		DEFL.	in	(loc)	l/defl	L/d	PLATES	GRIP
TCLL (roof)	20.0	Plate Grip DOL 1.15	TC	0.85	Vert(LL)	-0.18	10-12	>999	240	MT20	197/144
Snow (Pf/Pg)	16.5/15.0	Lumber DOL 1.15	BC	0.83	Vert(CT)	-0.38	10-12	>864	180		
TCDL	10.0	Rep Stress Incr YES	WB	0.48	Horz(CT)	0.04	10	n/a	n/a		
BCLL	0.0 *	Code IRC2015/TPI2014	Matrix-S							Weight: 186 lb	FT = 20%
BCDL	10.0										

LUMBER-

TOP CHORD 2x4 SP No.2 or 2x4 SPF No.2 *Except* 6-7: 2x4 SP No.1

BOT CHORD 2x4 SP No.2 or 2x4 SPF No.2

WEBS 2x4 SP No.3

BRACING-

TOP CHORD Structural wood sheathing directly applied or 4-4-13 oc purlins, except end verticals, and 2-0-0 oc purlins (3-7-11 max.): 4-8.

BOT CHORD Rigid ceiling directly applied or 10-0-0 oc bracing, Except: 6-0-0 oc bracing: 9-10.

WEBS 1 Row at midpt 5-14, 6-10

REACTIONS. (size) 9=Mechanical, 2=0-3-8, 10=0-3-8
Max Horz 2=134(LC 16)
Max Uplift 9=-119(LC 36), 2=-8(LC 16), 10=-142(LC 13)
Max Grav 9=10(LC 16), 2=1001(LC 2), 10=2132(LC 35)

FORCES. (lb) - Max. Comp./Max. Ten. - All forces 250 (lb) or less except when shown.

TOP CHORD 2-3=-1603/120, 3-4=-1412/78, 4-5=-1216/95, 5-6=-1119/50, 6-7=-85/964

BOT CHORD 2-14=-192/1362, 12-14=-98/1327, 10-12=-61/323, 9-10=-602/23

WEBS 3-14=-273/122, 4-14=0/366, 5-12=-525/125, 6-12=0/1076, 6-10=-1634/184, 7-10=-1006/168, 7-9=-27/733

NOTES-

1) Unbalanced roof live loads have been considered for this design.
2) Wind: ASCE 7-10; Vult=115mph Vasd=91mph; TCDL=6.0psf; BCDL=6.0psf; h=25ft; Cat. II; Exp B; Enclosed; MWFRS (envelope) gable end zone and C-C Exterior(2) -0-10-8 to 2-9-6, Interior(1) 2-9-6 to 8-3-0, Exterior(2) 8-3-0 to 13-5-1, Interior(1) 13-5-1 to 36-5-4 zone;C-C for members and forces & MWFRS for reactions shown; Lumber DOL=1.60 plate grip DOL=1.60
3) TCLL: ASCE 7-10; Pr=20.0 psf (roof live load: Lumber DOL=1.15 Plate DOL=1.15); Pg=15.0 psf (ground snow); Pf=16.5 psf (flat roof snow: Lumber DOL=1.15 Plate DOL=1.15); Category II; Exp B; Partially Exp.; Ct=1.10, Lu=50-0-0; Min. flat roof snow load governs. Rain surcharge applied to all exposed surfaces with slopes less than 0.500/12 in accordance with IBC 1608.3.4.
4) Unbalanced snow loads have been considered for this design.
5) This truss has been designed for greater of min roof live load of 12.0 psf or 1.00 times flat roof load of 11.6 psf on overhangs non-concurrent with other live loads.
6) Provide adequate drainage to prevent water ponding.
7) This truss has been designed for a 10.0 psf bottom chord live load nonconcurrent with any other live loads.
8) * This truss has been designed for a live load of 20.0psf on the bottom chord in all areas where a rectangle 3-6-0 tall by 2-0-0 wide will fit between the bottom chord and any other members.
9) Refer to girder(s) for truss to truss connections.
10) Provide mechanical connection (by others) of truss to bearing plate capable of withstanding 100 lb uplift at joint(s) except (jt=lb) 9=119.
11) One H2.5A Simpson Strong-Tie connectors recommended to connect truss to bearing walls due to UPLIFT at jt(s) 2 and 10. This connection is for uplift only and does not consider lateral forces.
12) Graphical purlin representation does not depict the size or the orientation of the purlin along the top and/or bottom chord.

November 24,2020

WARNING - Verify design parameters and READ NOTES ON THIS AND INCLUDED MITEK REFERENCE PAGE MII-7473 rev. 5/19/2020 BEFORE USE.
Design valid for use only with MiTek® connectors. This design is based only upon parameters shown, and is for an individual building component, not a truss system. Before use, the building designer must verify the applicability of design parameters and properly incorporate this design into the overall building design. Bracing indicated is to prevent buckling of individual truss web and/or chord members only. Additional temporary and permanent bracing is always required for stability and to prevent collapse with possible personal injury and property damage. For general guidance regarding the fabrication, storage, delivery, erection and bracing of trusses and truss systems, see **ANSI/TPI1 Quality Criteria, DSB-89 and BCSI Building Component Safety Information** available from Truss Plate Institute, 2670 Crain Highway, Suite 203 Waldorf, MD 20601

ENGINEERING BY TRENCO A MiTek Affiliate
818 Soundside Road
Edenton, NC 27932

Job	Truss	Truss Type	Qty	Ply	KB Home 150.1910.D
150_1910_D	H7	Half Hip	1	1	I43742709 Job Reference (optional)

84 Components (Dunn), Dunn, NC - 28334, 8.430 s Nov 18 2020 MiTek Industries, Inc. Mon Nov 23 14:42:37 2020 Page 1

ID:VMD62rz1yiHD_OqRtbnrlFztQ8K-3YWv0N1IaIlXDjRf17ZSBMLfDEsBCoCKh6CWl_yGGf0

5-6-15	10-11-0	17-3-2	23-7-4	29-11-6	36-7-0
5-6-15	5-4-1	6-4-2	6-4-2	6-4-2	6-7-10

Scale = 1:63.3

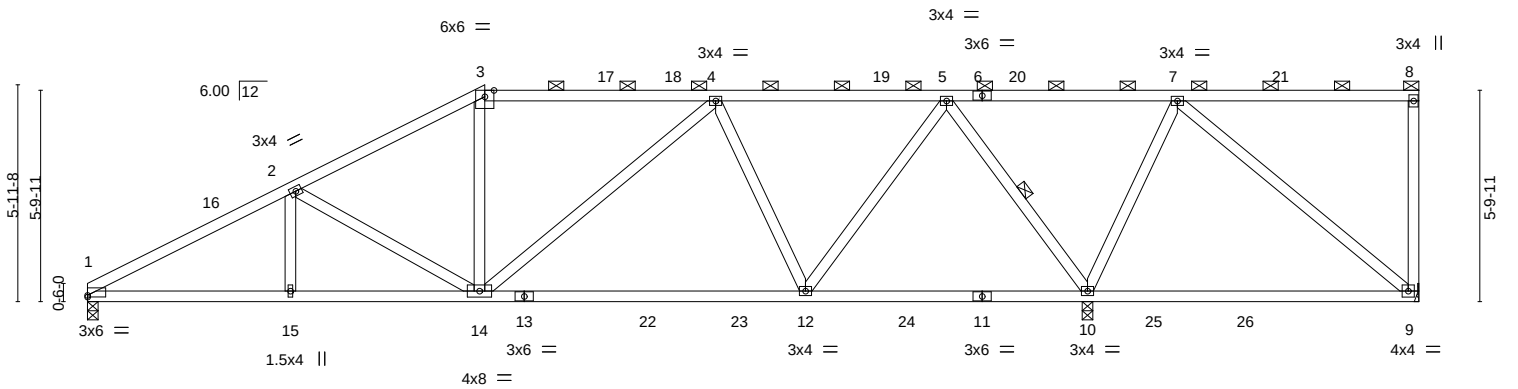

5-6-15	10-11-0	19-8-12	27-5-12	36-7-0
5-6-15	5-4-1	8-9-12	7-9-0	9-1-4

Plate Offsets (X,Y)-- [1:0-0-0,0-0-9]

LOADING (psf)		SPACING-	2-0-0	CSI.		DEFL.	in	(loc)	l/defl	L/d	PLATES	GRIP
TCLL (roof)	20.0	Plate Grip DOL	1.15	TC	0.84	Vert(LL)	-0.17	9-10	>620	240	MT20	197/144
Snow (Pf/Pg)	16.5/15.0	Lumber DOL	1.15	BC	0.65	Vert(CT)	-0.34	9-10	>313	180		
TCDL	10.0	Rep Stress Incr	YES	WB	0.67	Horz(CT)	0.04	10	n/a	n/a		
BCLL	0.0 *	Code	IRC2015/TPI2014	Matrix-S							Weight: 200 lb	FT = 20%
BCDL	10.0											

LUMBER-

TOP CHORD 2x4 SP No.2 or 2x4 SPF No.2
BOT CHORD 2x4 SP No.2 or 2x4 SPF No.2
WEBS 2x4 SP No.3

BRACING-

TOP CHORD Structural wood sheathing directly applied or 3-11-15 oc purlins, except end verticals, and 2-0-0 oc purlins (4-11-7 max.): 3-8.
BOT CHORD Rigid ceiling directly applied or 6-0-0 oc bracing.
WEBS 1 Row at midpt 5-10

REACTIONS. (size) 1=0-3-8, 9=Mechanical, 10=0-3-8
Max Horz 1=168(LC 16)
Max Uplift 1=-5(LC 16), 9=-175(LC 35), 10=-120(LC 13)
Max Grav 1=937(LC 35), 9=24(LC 16), 10=2133(LC 34)

FORCES. (lb) - Max. Comp./Max. Ten. - All forces 250 (lb) or less except when shown.
TOP CHORD 1-2=-1621/69, 2-3=-1207/73, 3-4=-1013/95, 4-5=-585/30, 5-7=-62/768
BOT CHORD 1-15=-172/1377, 14-15=-172/1377, 12-14=-73/853, 9-10=-413/11
WEBS 2-14=-542/117, 3-14=0/282, 4-14=-42/389, 4-12=-657/126, 5-12=-19/933, 5-10=-1364/132, 7-10=-928/132, 7-9=-11/568

NOTES-

1) Unbalanced roof live loads have been considered for this design.
2) Wind: ASCE 7-10; Vult=115mph Vasd=91mph; TCDL=6.0psf; BCDL=6.0psf; h=25ft; Cat. II; Exp B; Enclosed; MWFRS (envelope) gable end zone and C-C Exterior(2) 0-1-12 to 3-9-10, Interior(1) 3-9-10 to 10-11-0, Exterior(2) 10-11-0 to 16-1-1, Interior(1) 16-1-1 to 36-5-4 zone;C-C for members and forces & MWFRS for reactions shown; Lumber DOL=1.60 plate grip DOL=1.60
3) TCLL: ASCE 7-10; Pr=20.0 psf (roof live load: Lumber DOL=1.15 Plate DOL=1.15); Pg=15.0 psf (ground snow); Pf=16.5 psf (flat roof snow: Lumber DOL=1.15 Plate DOL=1.15); Category II; Exp B; Partially Exp.; Ct=1.10, Lu=50-0-0; Min. flat roof snow load governs. Rain surcharge applied to all exposed surfaces with slopes less than 0.500/12 in accordance with IBC 1608.3.4.
4) Unbalanced snow loads have been considered for this design.
5) Provide adequate drainage to prevent water ponding.
6) This truss has been designed for a 10.0 psf bottom chord live load nonconcurrent with any other live loads.
7) * This truss has been designed for a live load of 20.0psf on the bottom chord in all areas where a rectangle 3-6-0 tall by 2-0-0 wide will fit between the bottom chord and any other members, with BCDL = 10.0psf.
8) Refer to girder(s) for truss to truss connections.
9) Provide mechanical connection (by others) of truss to bearing plate capable of withstanding 100 lb uplift at joint(s) except (jt=lb) 9=175.
10) One H2.5A Simpson Strong-Tie connectors recommended to connect truss to bearing walls due to UPLIFT at jt(s) 1 and 10. This connection is for uplift only and does not consider lateral forces.
11) Graphical purlin representation does not depict the size or the orientation of the purlin along the top and/or bottom chord.

NORTH CAROLINA PROFESSIONAL SEAL 044925 ENGINEER SCOTT M. SEVIER

Scott Sevier

November 24,2020

WARNING - Verify design parameters and READ NOTES ON THIS AND INCLUDED MITEK REFERENCE PAGE MII-7473 rev. 5/19/2020 BEFORE USE.
Design valid for use only with MiTek® connectors. This design is based only upon parameters shown, and is for an individual building component, not a truss system. Before use, the building designer must verify the applicability of design parameters and properly incorporate this design into the overall building design. Bracing indicated is to prevent buckling of individual truss web and/or chord members only. Additional temporary and permanent bracing is always required for stability and to prevent collapse with possible personal injury and property damage. For general guidance regarding the fabrication, storage, delivery, erection and bracing of trusses and truss systems, see **ANSI/TPI1 Quality Criteria, DSB-89 and BCSI Building Component Safety Information** available from Truss Plate Institute, 2670 Crain Highway, Suite 203 Waldorf, MD 20601

ENGINEERING BY TRENCO A MiTek Affiliate
818 Soundside Road
Edenton, NC 27932

Job	Truss	Truss Type	Qty	Ply	KB Home 150.1910.D
150_1910_D	H8	Half Hip	1	1	I43742710 Job Reference (optional)

84 Components (Dunn), Dunn, NC - 28334, 8.430 s Nov 18 2020 MiTek Industries, Inc. Mon Nov 23 14:42:38 2020 Page 1
ID:VMD62rz1yiHD_OqRtbnrlFztQ8K-Xl4IEj2wL3QOqs0sbq4hjatpCdCZxCgTvmx4HQyGGf?

6-10-15	13-7-0	20-5-8	27-5-12	28-8-11	36-7-0
6-10-15	6-8-1	6-10-8	7-0-4	1-2-15	7-10-5

Scale = 1:63.3

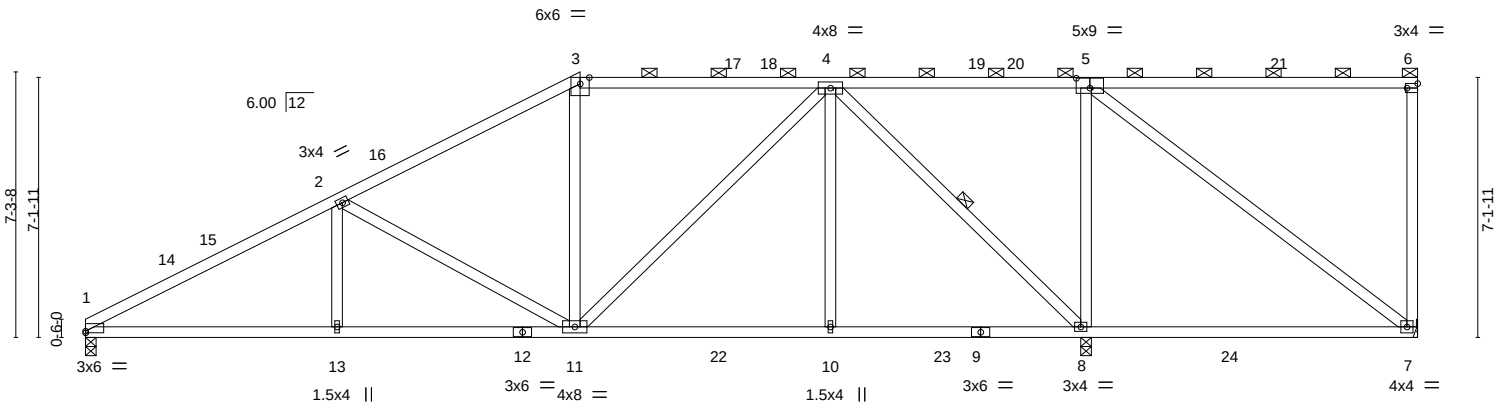

6-10-15	13-7-0	20-5-8	27-5-12	36-7-0
6-10-15	6-8-1	6-10-8	7-0-4	9-1-4

Plate Offsets (X,Y)-- [1:0-0-0,0-0-9], [5:0-4-8,0-3-4], [6:Edge,0-1-8]

LOADING (psf)		**SPACING-** 2-0-0	**CSI.**		**DEFL.**	in	(loc)	l/defl	L/d	**PLATES**	**GRIP**
TCLL (roof)	20.0	Plate Grip DOL 1.15	TC	0.95	Vert(LL)	-0.18	7-8	>611	240	MT20	197/144
Snow (Pf/Pg)	16.5/15.0	Lumber DOL 1.15	BC	0.65	Vert(CT)	-0.35	7-8	>311	180		
TCDL	10.0	Rep Stress Incr YES	WB	0.85	Horz(CT)	0.04	8	n/a	n/a		
BCLL	0.0 *	Code IRC2015/TPI2014	Matrix-S							Weight: 210 lb	FT = 20%
BCDL	10.0										

LUMBER-
TOP CHORD 2x4 SP No.1 *Except*
1-3: 2x4 SP No.2 or 2x4 SPF No.2
BOT CHORD 2x4 SP No.2 or 2x4 SPF No.2
WEBS 2x4 SP No.3

BRACING-
TOP CHORD Structural wood sheathing directly applied or 3-2-8 oc purlins, except end verticals, and 2-0-0 oc purlins (2-2-0 max.): 3-6.
BOT CHORD Rigid ceiling directly applied or 10-0-0 oc bracing, Except: 6-0-0 oc bracing: 7-8.
WEBS 1 Row at midpt 4-8

REACTIONS. (size) 1=0-3-8, 7=Mechanical, 8=0-3-8
Max Horz 1=208(LC 16)
Max Uplift 1=-12(LC 16), 7=-170(LC 39), 8=-83(LC 13)
Max Grav 1=966(LC 2), 7=99(LC 34), 8=2018(LC 36)

FORCES. (lb) - Max. Comp./Max. Ten. - All forces 250 (lb) or less except when shown.
TOP CHORD 1-2=-1641/44, 2-3=-1066/69, 3-4=-869/97, 4-5=-17/429, 6-7=-295/70
BOT CHORD 1-13=-170/1392, 11-13=-170/1392, 10-11=-51/563, 8-10=-51/563, 7-8=-415/15
WEBS 2-13=0/289, 2-11=-722/133, 4-11=-72/602, 4-10=0/321, 4-8=-1313/89, 5-8=-929/154, 5-7=-20/557

NOTES-
1) Unbalanced roof live loads have been considered for this design.
2) Wind: ASCE 7-10; Vult=115mph Vasd=91mph; TCDL=6.0psf; BCDL=6.0psf; h=25ft; Cat. II; Exp B; Enclosed; MWFRS (envelope) gable end zone and C-C Exterior(2) 0-1-12 to 3-9-10, Interior(1) 3-9-10 to 13-7-0, Exterior(2) 13-7-0 to 18-9-1, Interior(1) 18-9-1 to 36-5-4 zone;C-C for members and forces & MWFRS for reactions shown; Lumber DOL=1.60 plate grip DOL=1.60
3) TCLL: ASCE 7-10; Pr=20.0 psf (roof live load: Lumber DOL=1.15 Plate DOL=1.15); Pg=15.0 psf (ground snow); Pf=16.5 psf (flat roof snow: Lumber DOL=1.15 Plate DOL=1.15); Category II; Exp B; Partially Exp.; Ct=1.10, Lu=50-0-0; Min. flat roof snow load governs. Rain surcharge applied to all exposed surfaces with slopes less than 0.500/12 in accordance with IBC 1608.3.4.
4) Unbalanced snow loads have been considered for this design.
5) Provide adequate drainage to prevent water ponding.
6) This truss has been designed for a 10.0 psf bottom chord live load nonconcurrent with any other live loads.
7) * This truss has been designed for a live load of 20.0psf on the bottom chord in all areas where a rectangle 3-6-0 tall by 2-0-0 wide will fit between the bottom chord and any other members, with BCDL = 10.0psf.
8) Refer to girder(s) for truss to truss connections.
9) Provide mechanical connection (by others) of truss to bearing plate capable of withstanding 100 lb uplift at joint(s) except (jt=lb) 7=170.
10) One H2.5A Simpson Strong-Tie connectors recommended to connect truss to bearing walls due to UPLIFT at jt(s) 1 and 8. This connection is for uplift only and does not consider lateral forces.
11) Graphical purlin representation does not depict the size or the orientation of the purlin along the top and/or bottom chord.

November 24,2020

WARNING - Verify design parameters and READ NOTES ON THIS AND INCLUDED MITEK REFERENCE PAGE MII-7473 rev. 5/19/2020 BEFORE USE.
Design valid for use only with MiTek® connectors. This design is based only upon parameters shown, and is for an individual building component, not a truss system. Before use, the building designer must verify the applicability of design parameters and properly incorporate this design into the overall building design. Bracing indicated is to prevent buckling of individual truss web and/or chord members only. Additional temporary and permanent bracing is always required for stability and to prevent collapse with possible personal injury and property damage. For general guidance regarding the fabrication, storage, delivery, erection and bracing of trusses and truss systems, see **ANSI/TPI1 Quality Criteria, DSB-89 and BCSI Building Component Safety Information** available from Truss Plate Institute, 2670 Crain Highway, Suite 203 Waldorf, MD 20601

ENGINEERING BY TRENCO A MiTek Affiliate
818 Soundside Road
Edenton, NC 27932

Job	Truss	Truss Type	Qty	Ply	KB Home 150.1910.D
150_1910_D	H9	Hip	1	1	I43742711 Job Reference (optional)

84 Components (Dunn), Dunn, NC - 28334, 8.430 s Nov 18 2020 MiTek Industries, Inc. Mon Nov 23 14:42:40 2020 Page 1
ID:VMD62rz1yiHD_OqRtbnrlFztQ8K-T7C2eP3Btgg54A9EiF69p?yBaRtRP8gmN4QAKlyGGez

5-6-14	10-10-15	16-3-0	31-9-0	36-7-0
5-6-14	5-4-1	5-4-1	15-6-0	4-10-0

Scale = 1:64.8

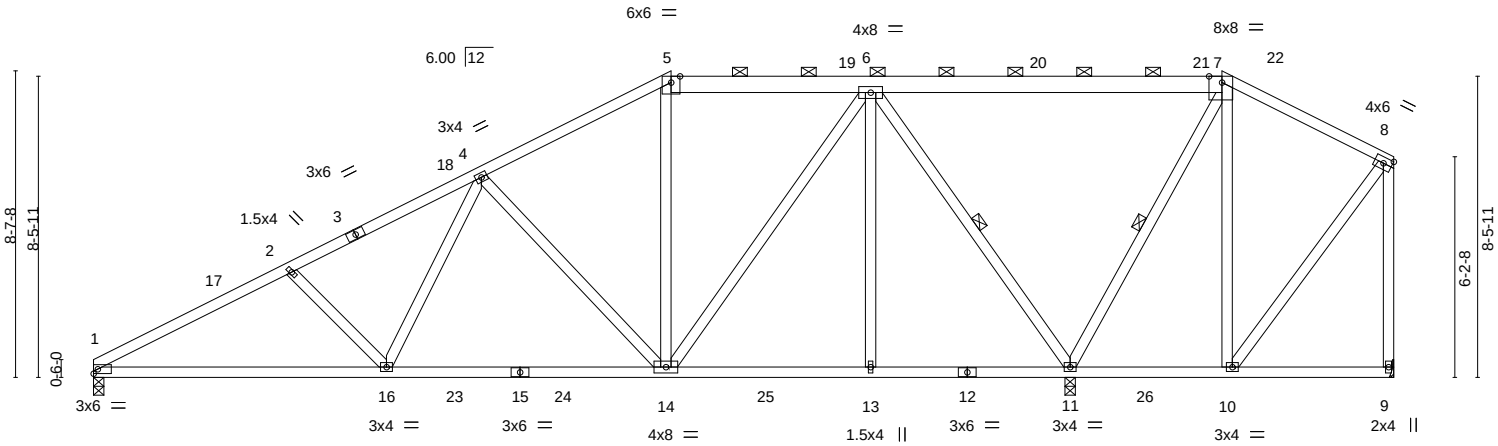

8-2-15	16-3-0	27-5-12	31-9-0	36-7-0
8-2-15	8-0-1	11-2-12	4-3-4	4-10-0

Plate Offsets (X,Y)-- [7:0-4-6,Edge]

LOADING (psf)		**SPACING-** 2-0-0	**CSI.**		**DEFL.**	in	(loc)	l/defl	L/d	**PLATES**	**GRIP**
TCLL (roof)	20.0	Plate Grip DOL 1.15	TC	0.77	Vert(LL)	-0.12	1-16	>999	240	MT20	197/144
Snow (Pf/Pg)	16.5/15.0	Lumber DOL 1.15	BC	0.75	Vert(CT)	-0.26	1-16	>999	180		
TCDL	10.0	Rep Stress Incr YES	WB	0.75	Horz(CT)	0.03	11	n/a	n/a		
BCLL	0.0 *	Code IRC2015/TPI2014	Matrix-S							Weight: 247 lb	FT = 20%
BCDL	10.0										

LUMBER-
TOP CHORD 2x4 SP No.2 or 2x4 SPF No.2 *Except*
5-7: 2x6 SP No.2, 7-8: 2x4 SP No.2
BOT CHORD 2x4 SP No.2 or 2x4 SPF No.2
WEBS 2x4 SP No.3

BRACING-
TOP CHORD Structural wood sheathing directly applied or 3-11-13 oc purlins, except end verticals, and 2-0-0 oc purlins (6-0-0 max.): 5-7.
BOT CHORD Rigid ceiling directly applied or 10-0-0 oc bracing, Except: 6-0-0 oc bracing: 10-11.
WEBS 1 Row at midpt 6-11, 7-11

REACTIONS. (size) 1=0-3-8, 11=0-3-8, 9=Mechanical
Max Horz 1=210(LC 16)
Max Uplift 1=-17(LC 16), 11=-38(LC 13), 9=-264(LC 53)
Max Grav 1=935(LC 53), 11=2128(LC 3), 9=62(LC 16)

FORCES. (lb) - Max. Comp./Max. Ten. - All forces 250 (lb) or less except when shown.
TOP CHORD 1-2=-1584/51, 2-4=-1372/45, 4-5=-737/82, 5-6=-603/102, 6-7=-10/592, 7-8=-25/270, 8-9=-39/305
BOT CHORD 1-16=-200/1347, 14-16=-109/984, 13-14=-41/324, 11-13=-41/324
WEBS 2-16=-269/136, 4-16=0/459, 4-14=-665/132, 6-14=-72/726, 6-13=0/280, 6-11=-1452/133, 7-11=-919/104, 7-10=0/366, 8-10=-302/53

NOTES-
1) Unbalanced roof live loads have been considered for this design.
2) Wind: ASCE 7-10; Vult=115mph Vasd=91mph; TCDL=6.0psf; BCDL=6.0psf; h=25ft; Cat. II; Exp B; Enclosed; MWFRS (envelope) gable end zone and C-C Exterior(2) 0-1-12 to 3-9-10, Interior(1) 3-9-10 to 16-3-0, Exterior(2) 16-3-0 to 21-5-1, Interior(1) 21-5-1 to 31-9-0, Exterior(2) 31-9-0 to 36-5-4 zone;C-C for members and forces & MWFRS for reactions shown; Lumber DOL=1.60 plate grip DOL=1.60
3) TCLL: ASCE 7-10; Pr=20.0 psf (roof live load: Lumber DOL=1.15 Plate DOL=1.15); Pg=15.0 psf (ground snow); Pf=16.5 psf (flat roof snow: Lumber DOL=1.15 Plate DOL=1.15); Category II; Exp B; Partially Exp.; Ct=1.10, Lu=50-0-0; Min. flat roof snow load governs. Rain surcharge applied to all exposed surfaces with slopes less than 0.500/12 in accordance with IBC 1608.3.4.
4) Unbalanced snow loads have been considered for this design.
5) Provide adequate drainage to prevent water ponding.
6) This truss has been designed for a 10.0 psf bottom chord live load nonconcurrent with any other live loads.
7) * This truss has been designed for a live load of 20.0psf on the bottom chord in all areas where a rectangle 3-6-0 tall by 2-0-0 wide will fit between the bottom chord and any other members, with BCDL = 10.0psf.
8) Refer to girder(s) for truss to truss connections.
9) Provide mechanical connection (by others) of truss to bearing plate capable of withstanding 100 lb uplift at joint(s) except (jt=lb) 9=264.
10) One H2.5A Simpson Strong-Tie connectors recommended to connect truss to bearing walls due to UPLIFT at jt(s) 1 and 11. This connection is for uplift only and does not consider lateral forces.
11) Graphical purlin representation does not depict the size or the orientation of the purlin along the top and/or bottom chord.

November 24,2020

WARNING - Verify design parameters and READ NOTES ON THIS AND INCLUDED MITEK REFERENCE PAGE MII-7473 rev. 5/19/2020 BEFORE USE.
Design valid for use only with MiTek® connectors. This design is based only upon parameters shown, and is for an individual building component, not a truss system. Before use, the building designer must verify the applicability of design parameters and properly incorporate this design into the overall building design. Bracing indicated is to prevent buckling of individual truss web and/or chord members only. Additional temporary and permanent bracing is always required for stability and to prevent collapse with possible personal injury and property damage. For general guidance regarding the fabrication, storage, delivery, erection and bracing of trusses and truss systems, see **ANSI/TPI1 Quality Criteria, DSB-89 and BCSI Building Component Safety Information** available from Truss Plate Institute, 2670 Crain Highway, Suite 203 Waldorf, MD 20601

ENGINEERING BY TRENCO A MiTek Affiliate
818 Soundside Road
Edenton, NC 27932

Job	Truss	Truss Type	Qty	Ply	KB Home 150.1910.D
150_1910_D	H10	Hip	1	1	I43742712 Job Reference (optional)

84 Components (Dunn), Dunn, NC - 28334, 8.430 s Nov 18 2020 MiTek Industries, Inc. Mon Nov 23 14:42:26 2020 Page 1
ID:VMD62rz1yiHD_OqRtbnrlFztQ8K-uRMlicuOANv5O05YuJstE2Noto2L7qHi9u1Rs6yGGfB

-0-10-8	6-5-9	12-8-4	18-11-0	23-1-8	29-1-0	36-7-0
0-10-8	6-5-9	6-2-12	6-2-12	4-2-8	5-11-8	7-6-0

Scale = 1:67.6

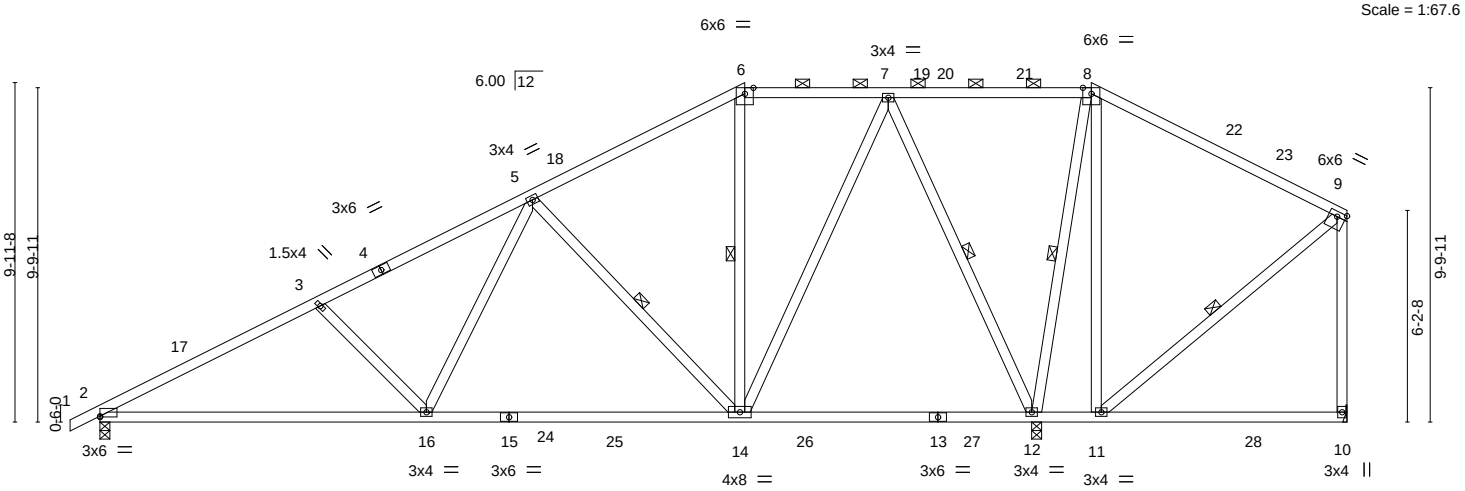

9-6-15	18-11-0	27-5-12	29-1-0	36-7-0
9-6-15	9-4-1	8-6-12	1-7-4	7-6-0

Plate Offsets (X,Y)-- [2:0-0-0,0-0-5], [9:Edge,0-1-12]

LOADING (psf)		**SPACING-** 2-0-0	**CSI.**		**DEFL.**	in	(loc)	l/defl	L/d	**PLATES**	**GRIP**
TCLL (roof)	20.0	Plate Grip DOL 1.15	TC	0.78	Vert(LL)	-0.20	2-16	>999	240	MT20	197/144
Snow (Pf/Pg)	16.5/15.0	Lumber DOL 1.15	BC	0.93	Vert(CT)	-0.43	2-16	>751	180		
TCDL	10.0	Rep Stress Incr YES	WB	0.69	Horz(CT)	0.03	12	n/a	n/a		
BCLL	0.0 *	Code IRC2015/TPI2014	Matrix-S							Weight: 239 lb	FT = 20%
BCDL	10.0										

LUMBER-
TOP CHORD 2x4 SP No.2 or 2x4 SPF No.2 *Except*
8-9: 2x4 SP No.1
BOT CHORD 2x4 SP No.2 or 2x4 SPF No.2
WEBS 2x4 SP No.3 *Except*
9-10: 2x4 SP No.2 or 2x4 SPF No.2

BRACING-
TOP CHORD Structural wood sheathing directly applied or 3-9-10 oc purlins, except end verticals, and 2-0-0 oc purlins (6-0-0 max.): 6-8.
BOT CHORD Rigid ceiling directly applied or 2-2-0 oc bracing.
WEBS 1 Row at midpt 5-14, 6-14, 7-12, 8-12, 9-11

REACTIONS. (size) 2=0-3-8, 12=0-3-8, 10=Mechanical
Max Horz 2=234(LC 16)
Max Uplift 2=-34(LC 16), 12=-55(LC 16), 10=-265(LC 54)
Max Grav 2=998(LC 54), 12=2077(LC 3), 10=119(LC 43)

FORCES. (lb) - Max. Comp./Max. Ten. - All forces 250 (lb) or less except when shown.
TOP CHORD 2-3=-1536/56, 3-5=-1284/47, 5-6=-529/80, 6-7=-409/105, 7-8=0/433, 8-9=-46/417, 9-10=-50/339
BOT CHORD 2-16=-212/1301, 14-16=-108/878, 11-12=-306/54
WEBS 3-16=-331/154, 5-16=0/540, 5-14=-758/158, 7-14=-66/924, 7-12=-1197/119, 8-12=-863/93, 8-11=0/346, 9-11=-410/70

NOTES-
1) Unbalanced roof live loads have been considered for this design.
2) Wind: ASCE 7-10; Vult=115mph Vasd=91mph; TCDL=6.0psf; BCDL=6.0psf; h=25ft; Cat. II; Exp B; Enclosed; MWFRS (envelope) gable end zone and C-C Exterior(2) -0-10-8 to 2-9-6, Interior(1) 2-9-6 to 18-11-0, Exterior(2) 18-11-0 to 24-1-1, Interior(1) 24-1-1 to 29-1-0, Exterior(2) 29-1-0 to 34-3-1, Interior(1) 34-3-1 to 36-5-4 zone;C-C for members and forces & MWFRS for reactions shown; Lumber DOL=1.60 plate grip DOL=1.60
3) TCLL: ASCE 7-10; Pr=20.0 psf (roof live load: Lumber DOL=1.15 Plate DOL=1.15); Pg=15.0 psf (ground snow); Pf=16.5 psf (flat roof snow: Lumber DOL=1.15 Plate DOL=1.15); Category II; Exp B; Partially Exp.; Ct=1.10, Lu=50-0-0; Min. flat roof snow load governs. Rain surcharge applied to all exposed surfaces with slopes less than 0.500/12 in accordance with IBC 1608.3.4.
4) Unbalanced snow loads have been considered for this design.
5) This truss has been designed for greater of min roof live load of 12.0 psf or 1.00 times flat roof load of 11.6 psf on overhangs non-concurrent with other live loads.
6) Provide adequate drainage to prevent water ponding.
7) This truss has been designed for a 10.0 psf bottom chord live load nonconcurrent with any other live loads.
8) * This truss has been designed for a live load of 20.0psf on the bottom chord in all areas where a rectangle 3-6-0 tall by 2-0-0 wide will fit between the bottom chord and any other members, with BCDL = 10.0psf.
9) Refer to girder(s) for truss to truss connections.
10) Provide mechanical connection (by others) of truss to bearing plate capable of withstanding 100 lb uplift at joint(s) except (jt=lb) 10=265.
11) One H2.5A Simpson Strong-Tie connectors recommended to connect truss to bearing walls due to UPLIFT at jt(s) 2 and 12. This connection is for uplift only and does not consider lateral forces.
12) Graphical purlin representation does not depict the size or the orientation of the purlin along the top and/or bottom chord.

November 24,2020

WARNING - Verify design parameters and READ NOTES ON THIS AND INCLUDED MITEK REFERENCE PAGE MII-7473 rev. 5/19/2020 BEFORE USE.
Design valid for use only with MiTek® connectors. This design is based only upon parameters shown, and is for an individual building component, not a truss system. Before use, the building designer must verify the applicability of design parameters and properly incorporate this design into the overall building design. Bracing indicated is to prevent buckling of individual truss web and/or chord members only. Additional temporary and permanent bracing is always required for stability and to prevent collapse with possible personal injury and property damage. For general guidance regarding the fabrication, storage, delivery, erection and bracing of trusses and truss systems, see **ANSI/TPI1 Quality Criteria, DSB-89 and BCSI Building Component Safety Information** available from Truss Plate Institute, 2670 Crain Highway, Suite 203 Waldorf, MD 20601

ENGINEERING BY TRENCO A MiTek Affiliate
818 Soundside Road
Edenton, NC 27932

Job	Truss	Truss Type	Qty	Ply	KB Home 150.1910.D
150_1910_D	HG1	HALF HIP GIRDER	1	1	I43742713 Job Reference (optional)

84 Components (Dunn), Dunn, NC - 28334, 8.430 s Nov 18 2020 MiTek Industries, Inc. Mon Nov 23 14:42:45 2020 Page 1

ID:VMD62rz1yiHD_OqRtbnrlFztQ8K-q5?xi67JiCIOAx2CVoiKW2g0LSc74OgVWM8x0WyGGeu

-0-10-8	5-7-0	10-11-6	16-5-8	17-10-6	21-11-10	24-0-2	27-5-12	30-1-13	31-11-8	36-7-0
0-10-8	5-7-0	5-4-6	5-6-2	1-4-14	4-1-4	2-0-8	3-5-10	2-8-1	1-9-11	4-7-8

Scale: 3/16"=1'

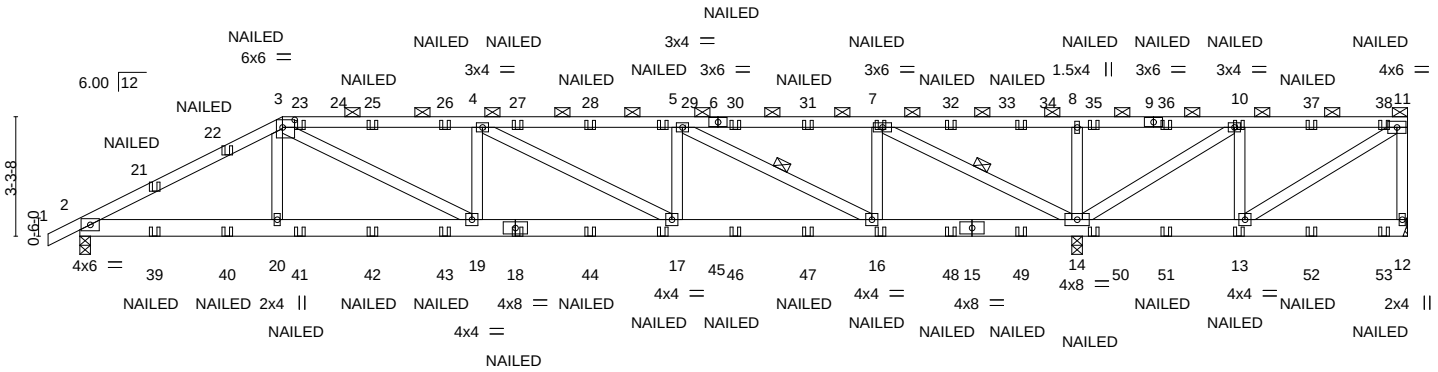

5-7-0	10-11-6	16-5-8	21-11-10	27-5-12	31-11-8	36-7-0
5-7-0	5-4-6	5-6-2	5-6-2	5-6-2	4-5-12	4-7-8

Plate Offsets (X,Y)-- [3:0-4-0,0-2-8]

LOADING (psf)		**SPACING-** 2-0-0	**CSI.**		**DEFL.**	in	(loc)	l/defl	L/d	**PLATES**	**GRIP**
TCLL (roof)	20.0	Plate Grip DOL 1.15	TC	0.90	Vert(LL)	-0.13	17-19	>999	240	MT20	197/144
Snow (Pf/Pg)	16.5/15.0	Lumber DOL 1.15	BC	0.59	Vert(CT)	-0.27	17-19	>999	180		
TCDL	10.0	Rep Stress Incr NO	WB	0.77	Horz(CT)	0.05	14	n/a	n/a		
BCLL	0.0 *	Code IRC2015/TPI2014	Matrix-S							Weight: 218 lb	FT = 20%
BCDL	10.0										

LUMBER-

TOP CHORD 2x4 SP No.2 or 2x4 SPF No.2
BOT CHORD 2x6 SP No.2
WEBS 2x4 SP No.3

BRACING-

TOP CHORD Structural wood sheathing directly applied or 3-1-9 oc purlins, except end verticals, and 2-0-0 oc purlins (3-0-2 max.): 3-11.
BOT CHORD Rigid ceiling directly applied or 10-0-0 oc bracing, Except: 6-0-0 oc bracing: 13-14.
WEBS 1 Row at midpt 5-16, 7-14

REACTIONS. (size) 12=Mechanical, 2=0-3-8, 14=(0-3-8 + H10A Simpson Strong-Tie) (req. 0-4-5)
Max Horz 2=97(LC 12)
Max Uplift 12=-87(LC 2), 2=-136(LC 9), 14=-462(LC 9)
Max Grav 12=12(LC 9), 2=1325(LC 2), 14=2762(LC 2)

FORCES. (lb) - Max. Comp./Max. Ten. - All forces 250 (lb) or less except when shown.
TOP CHORD 2-3=-2262/287, 3-4=-2640/423, 4-5=-2295/372, 5-7=-816/133, 7-8=-285/1700, 8-10=-285/1700, 10-11=-84/504
BOT CHORD 2-20=-271/1910, 19-20=-276/1898, 17-19=-423/2640, 16-17=-372/2295, 14-16=-133/816, 13-14=-504/84
WEBS 3-20=0/340, 3-19=-184/871, 4-19=-266/182, 4-17=-464/57, 5-17=0/443, 5-16=-1673/271, 7-16=-24/905, 7-14=-2847/473, 10-14=-1427/239, 10-13=0/469, 11-13=-627/109, 8-14=-402/176

NOTES-

1) Wind: ASCE 7-10; Vult=115mph Vasd=91mph; TCDL=6.0psf; BCDL=6.0psf; h=25ft; Cat. II; Exp B; Enclosed; MWFRS (envelope) gable end zone; Lumber DOL=1.60 plate grip DOL=1.60
2) TCLL: ASCE 7-10; Pr=20.0 psf (roof live load: Lumber DOL=1.15 Plate DOL=1.15); Pg=15.0 psf (ground snow); Pf=16.5 psf (flat roof snow: Lumber DOL=1.15 Plate DOL=1.15); Category II; Exp B; Partially Exp.; Ct=1.10, Lu=50-0-0; Min. flat roof snow load governs. Rain surcharge applied to all exposed surfaces with slopes less than 0.500/12 in accordance with IBC 1608.3.4.
3) Unbalanced snow loads have been considered for this design.
4) This truss has been designed for greater of min roof live load of 12.0 psf or 1.00 times flat roof load of 11.6 psf on overhangs non-concurrent with other live loads.
5) Provide adequate drainage to prevent water ponding.
6) This truss has been designed for a 10.0 psf bottom chord live load nonconcurrent with any other live loads.
7) * This truss has been designed for a live load of 20.0psf on the bottom chord in all areas where a rectangle 3-6-0 tall by 2-0-0 wide will fit between the bottom chord and any other members.
8) Refer to girder(s) for truss to truss connections.
9) Provide mechanical connection (by others) of truss to bearing plate capable of withstanding 100 lb uplift at joint(s) 12.
10) H10A Simpson Strong-Tie connectors recommended to connect truss to bearing walls due to UPLIFT at jt(s) 14. This connection is for uplift only and does not consider lateral forces.
11) One H2.5A Simpson Strong-Tie connectors recommended to connect truss to bearing walls due to UPLIFT at jt(s) 2. This connection is for uplift only and does not consider lateral forces.
12) Graphical purlin representation does not depict the size or the orientation of the purlin along the top and/or bottom chord.
13) "NAILED" indicates 3-10d (0.148"x3") or 3-12d (0.148"x3.25") toe-nails per NDS guidlines.
14) In the LOAD CASE(S) section, loads applied to the face of the truss are noted as front (F) or back (B).

Continued on page 2

November 24,2020

WARNING - Verify design parameters and READ NOTES ON THIS AND INCLUDED MITEK REFERENCE PAGE MII-7473 rev. 5/19/2020 BEFORE USE.
Design valid for use only with MiTek® connectors. This design is based only upon parameters shown, and is for an individual building component, not a truss system. Before use, the building designer must verify the applicability of design parameters and properly incorporate this design into the overall building design. Bracing indicated is to prevent buckling of individual truss web and/or chord members only. Additional temporary and permanent bracing is always required for stability and to prevent collapse with possible personal injury and property damage. For general guidance regarding the fabrication, storage, delivery, erection and bracing of trusses and truss systems, see **ANSI/TPI1 Quality Criteria, DSB-89 and BCSI Building Component Safety Information** available from Truss Plate Institute, 2670 Crain Highway, Suite 203 Waldorf, MD 20601

ENGINEERING BY TRENCO A MiTek Affiliate
818 Soundside Road
Edenton, NC 27932

LOAD CASE(S) Standard

1) Dead + Snow (balanced): Lumber Increase=1.15, Plate Increase=1.15
   Uniform Loads (plf)
   Vert: 1-3=-43, 3-11=-53, 2-12=-20
   Concentrated Loads (lb)
   Vert: 18=-19(F) 16=-19(F) 7=-16(F) 10=-16(F) 13=-19(F) 21=-34(F) 22=-38(F) 23=-18(F) 25=-16(F) 26=-16(F) 27=-16(F) 28=-16(F) 29=-16(F) 30=-16(F) 31=-16(F) 32=-16(F) 34=-16(F) 35=-16(F) 36=-16(F) 37=-16(F) 38=-29(F) 39=-26(F) 40=-21(F) 41=-19(F) 42=-19(F) 43=-19(F) 44=-19(F) 45=-19(F) 46=-19(F) 47=-19(F) 48=-19(F) 49=-19(F) 50=-19(F) 51=-19(F) 52=-19(F) 53=-24(F)

WARNING - Verify design parameters and READ NOTES ON THIS AND INCLUDED MITEK REFERENCE PAGE MII-7473 rev. 5/19/2020 BEFORE USE.
Design valid for use only with MiTek® connectors. This design is based only upon parameters shown, and is for an individual building component, not a truss system. Before use, the building designer must verify the applicability of design parameters and properly incorporate this design into the overall building design. Bracing indicated is to prevent buckling of individual truss web and/or chord members only. Additional temporary and permanent bracing is always required for stability and to prevent collapse with possible personal injury and property damage. For general guidance regarding the fabrication, storage, delivery, erection and bracing of trusses and truss systems, see **ANSI/TPI1 Quality Criteria, DSB-89 and BCSI Building Component Safety Information** available from Truss Plate Institute, 2670 Crain Highway, Suite 203 Waldorf, MD 20601

ENGINEERING BY TRENCO A MiTek Affiliate
818 Soundside Road
Edenton, NC 27932

Job	Truss	Truss Type	Qty	Ply	KB Home 150.1910.D
150_1910_D	HG2	Half Hip Girder	1	2	I43742714 Job Reference (optional)

84 Components (Dunn), Dunn, NC - 28334, 8.430 s Nov 18 2020 MiTek Industries, Inc. Mon Nov 23 14:43:01 2020 Page 1
ID:VMD62rz1yiHD_OqRtbnrlFztQ8K-MAz_2aKMx7J75PGHR9_49QKsDv0kqdMsCr0oaayGGee

-0-10-8	2-3-8	5-7-0	12-11-6	14-6-8	20-5-8	27-0-8	34-6-10	42-2-8
0-10-8	2-3-8	3-3-8	7-4-6	1-7-2	5-11-0	6-7-0	7-6-2	7-7-14

Scale = 1:72.6

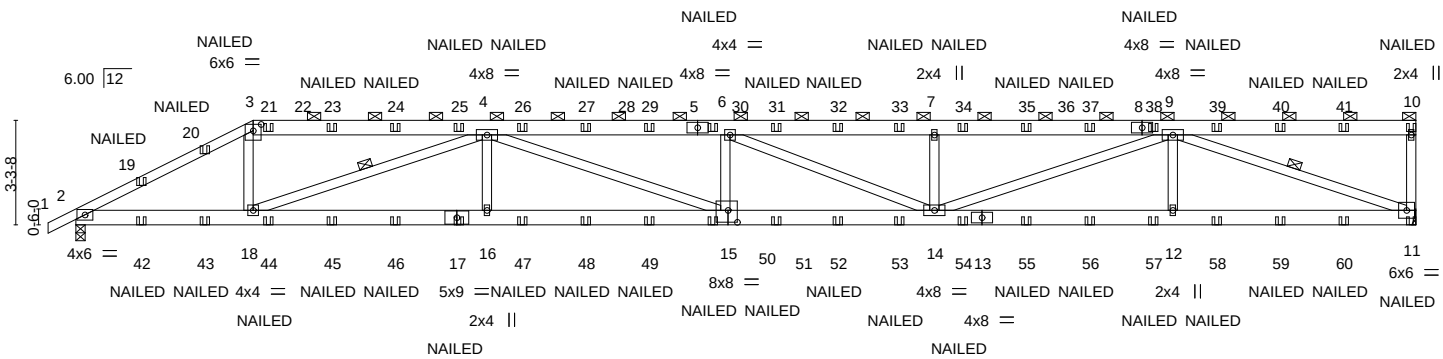

2-3-8	5-7-0	12-11-6	14-6-8	20-5-8	27-0-8	34-6-10	42-2-8
2-3-8	3-3-8	7-4-6	1-7-2	5-11-0	6-7-0	7-6-2	7-7-14

Plate Offsets (X,Y)-- [3:0-3-0,0-2-7], [15:0-3-8,0-4-8]

LOADING (psf)		SPACING-	2-0-0	CSI.		DEFL.	in	(loc)	l/defl	L/d	PLATES	GRIP
TCLL (roof)	20.0	Plate Grip DOL	1.15	TC	0.39	Vert(LL)	-0.37	15	>999	240	MT20	197/144
Snow (Pf/Pg)	16.5/15.0	Lumber DOL	1.15	BC	0.85	Vert(CT)	-0.74	15	>676	180		
TCDL	10.0	Rep Stress Incr	NO	WB	0.79	Horz(CT)	0.13	11	n/a	n/a		
BCLL	0.0 *	Code	IRC2015/TPI2014	Matrix-S							Weight: 543 lb	FT = 20%
BCDL	10.0											

LUMBER-

TOP CHORD 2x6 SP No.2 *Except*
1-3: 2x4 SP No.2 or 2x4 SPF No.2
BOT CHORD 2x6 SP No.2
WEBS 2x4 SP No.3

BRACING-

TOP CHORD Structural wood sheathing directly applied or 5-7-6 oc purlins, except end verticals, and 2-0-0 oc purlins (5-0-12 max.): 3-10.
BOT CHORD Rigid ceiling directly applied or 10-0-0 oc bracing.
WEBS 1 Row at midpt 9-11, 4-18

REACTIONS. (size) 11=Mechanical, 2=0-3-8
Max Horz 2=95(LC 12)
Max Uplift 11=-394(LC 9), 2=-301(LC 9)
Max Grav 11=2323(LC 2), 2=2309(LC 2)

FORCES. (lb) - Max. Comp./Max. Ten. - All forces 250 (lb) or less except when shown.
TOP CHORD 2-3=-4423/638, 3-4=-3753/576, 4-6=-8437/1406, 6-7=-7755/1297, 7-9=-7755/1297, 10-11=-307/135
BOT CHORD 2-18=-582/3832, 16-18=-1190/7201, 15-16=-1190/7201, 14-15=-1400/8430, 12-14=-847/5056, 11-12=-847/5056
WEBS 3-18=-129/1568, 4-16=0/408, 6-14=-734/112, 7-14=-522/237, 9-14=-480/2885, 9-12=0/434, 9-11=-5309/890, 4-18=-3718/670, 4-15=-237/1334

NOTES-

1) 2-ply truss to be connected together with 10d (0.131"x3") nails as follows:
Top chords connected as follows: 2x4 - 1 row at 0-9-0 oc, 2x6 - 2 rows staggered at 0-9-0 oc.
Bottom chords connected as follows: 2x6 - 2 rows staggered at 0-9-0 oc.
Webs connected as follows: 2x4 - 1 row at 0-9-0 oc.
2) All loads are considered equally applied to all plies, except if noted as front (F) or back (B) face in the LOAD CASE(S) section. Ply to ply connections have been provided to distribute only loads noted as (F) or (B), unless otherwise indicated.
3) Unbalanced roof live loads have been considered for this design.
4) Wind: ASCE 7-10; Vult=115mph Vasd=91mph; TCDL=6.0psf; BCDL=6.0psf; h=25ft; Cat. II; Exp B; Enclosed; MWFRS (envelope) gable end zone; Lumber DOL=1.60 plate grip DOL=1.60
5) TCLL: ASCE 7-10; Pr=20.0 psf (roof live load: Lumber DOL=1.15 Plate DOL=1.15); Pg=15.0 psf (ground snow); Pf=16.5 psf (flat roof snow: Lumber DOL=1.15 Plate DOL=1.15); Category II; Exp B; Partially Exp.; Ct=1.10, Lu=50-0-0; Min. flat roof snow load governs. Rain surcharge applied to all exposed surfaces with slopes less than 0.500/12 in accordance with IBC 1608.3.4.
6) Unbalanced snow loads have been considered for this design.
7) This truss has been designed for greater of min roof live load of 12.0 psf or 1.00 times flat roof load of 11.6 psf on overhangs non-concurrent with other live loads.
8) Provide adequate drainage to prevent water ponding.
9) This truss has been designed for a 10.0 psf bottom chord live load nonconcurrent with any other live loads.
10) * This truss has been designed for a live load of 20.0psf on the bottom chord in all areas where a rectangle 3-6-0 tall by 2-0-0 wide will fit between the bottom chord and any other members.
11) Refer to girder(s) for truss to truss connections.
12) Provide mechanical connection (by others) of truss to bearing plate capable of withstanding 100 lb uplift at joint(s) except (jt=lb) 11=394.

November 24,2020

Continued on page 2

WARNING - Verify design parameters and READ NOTES ON THIS AND INCLUDED MITEK REFERENCE PAGE MII-7473 rev. 5/19/2020 BEFORE USE.
Design valid for use only with MiTek® connectors. This design is based only upon parameters shown, and is for an individual building component, not a truss system. Before use, the building designer must verify the applicability of design parameters and properly incorporate this design into the overall building design. Bracing indicated is to prevent buckling of individual truss web and/or chord members only. Additional temporary and permanent bracing is always required for stability and to prevent collapse with possible personal injury and property damage. For general guidance regarding the fabrication, storage, delivery, erection and bracing of trusses and truss systems, see **ANSI/TPI1 Quality Criteria, DSB-89 and BCSI Building Component Safety Information** available from Truss Plate Institute, 2670 Crain Highway, Suite 203 Waldorf, MD 20601

ENGINEERING BY TRENCO A MiTek Affiliate
818 Soundside Road
Edenton, NC 27932

NOTES-

13) One H2.5A Simpson Strong-Tie connectors recommended to connect truss to bearing walls due to UPLIFT at jt(s) 2. This connection is for uplift only and does not consider lateral forces.
14) Graphical purlin representation does not depict the size or the orientation of the purlin along the top and/or bottom chord.
15) "NAILED" indicates 3-10d (0.148"x3") or 3-12d (0.148"x3.25") toe-nails per NDS guidlines.

LOAD CASE(S) Standard

1) Dead + Snow (balanced): Lumber Increase=1.15, Plate Increase=1.15
   Uniform Loads (plf)
   Vert: 1-3=-43, 3-10=-53, 2-11=-20
   Concentrated Loads (lb)
   Vert: 10=-39(B) 11=-28(B) 17=-19(B) 19=-34(B) 20=-38(B) 21=-18(B) 23=-16(B) 24=-16(B) 25=-16(B) 26=-16(B) 27=-16(B) 29=-16(B) 30=-16(B) 31=-16(B) 32=-16(B) 33=-16(B) 34=-16(B) 35=-16(B) 37=-16(B) 38=-16(B) 39=-16(B) 40=-16(B) 41=-16(B) 42=-26(B) 43=-21(B) 44=-19(B) 45=-19(B) 46=-19(B) 47=-19(B) 48=-19(B) 49=-19(B) 50=-19(B) 51=-19(B) 52=-19(B) 53=-19(B) 54=-19(B) 55=-19(B) 56=-19(B) 57=-19(B) 58=-19(B) 59=-19(B) 60=-19(B)

WARNING - Verify design parameters and READ NOTES ON THIS AND INCLUDED MITEK REFERENCE PAGE MII-7473 rev. 5/19/2020 BEFORE USE.
Design valid for use only with MiTek® connectors. This design is based only upon parameters shown, and is for an individual building component, not a truss system. Before use, the building designer must verify the applicability of design parameters and properly incorporate this design into the overall building design. Bracing indicated is to prevent buckling of individual truss web and/or chord members only. Additional temporary and permanent bracing is always required for stability and to prevent collapse with possible personal injury and property damage. For general guidance regarding the fabrication, storage, delivery, erection and bracing of trusses and truss systems, see **ANSI/TPI1 Quality Criteria, DSB-89 and BCSI Building Component Safety Information** available from Truss Plate Institute, 2670 Crain Highway, Suite 203 Waldorf, MD 20601

ENGINEERING BY TRENCO A MiTek Affiliate
818 Soundside Road
Edenton, NC 27932

Job	Truss	Truss Type	Qty	Ply	KB Home 150.1910.D
150_1910_D	J1	Jack-Open	35	1	I43742715 Job Reference (optional)

84 Components (Dunn), Dunn, NC - 28334, 8.430 s Nov 18 2020 MiTek Industries, Inc. Mon Nov 23 14:43:02 2020 Page 1
ID:VMD62rz1yiHD_OqRtbnrlFztQ8K-qMXMGwK_iRR_jZrT?tVJiet57JW7ZGu?RVlL61yGGed

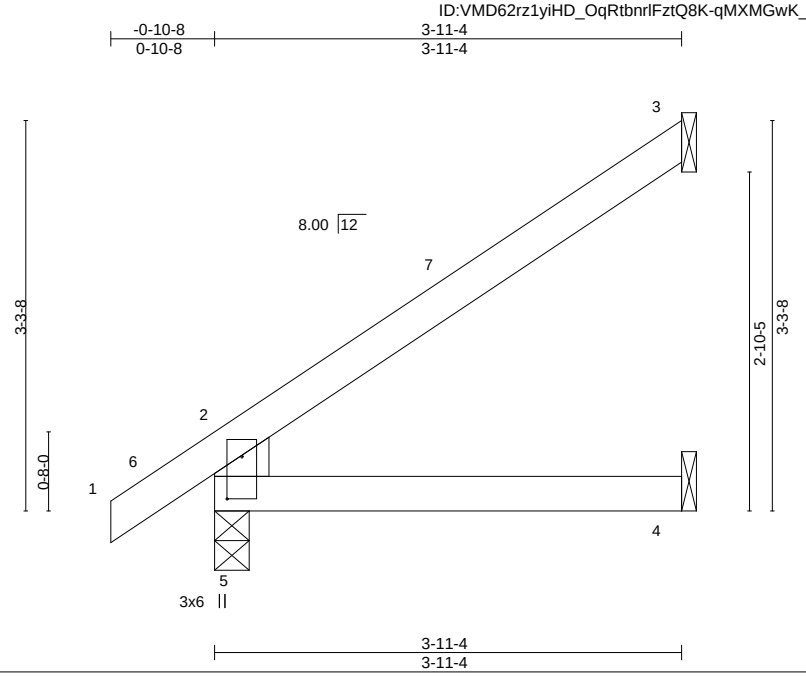

Plate Offsets (X,Y)-- [5:0-4-4,0-1-8]

LOADING (psf)		SPACING-	2-0-0	CSI.		DEFL.	in	(loc)	l/defl	L/d	PLATES	GRIP
TCLL (roof)	20.0	Plate Grip DOL	1.15	TC	0.19	Vert(LL)	-0.01	4-5	>999	240	MT20	197/144
Snow (Pf/Pg)	11.6/15.0	Lumber DOL	1.15	BC	0.14	Vert(CT)	-0.02	4-5	>999	180		
TCDL	10.0	Rep Stress Incr	YES	WB	0.00	Horz(CT)	0.01	3	n/a	n/a		
BCLL	0.0 *	Code IRC2015/TPI2014		Matrix-R							Weight: 16 lb	FT = 20%
BCDL	10.0											

LUMBER-
TOP CHORD 2x4 SP No.2 or 2x4 SPF No.2
BOT CHORD 2x4 SP No.2 or 2x4 SPF No.2
WEBS 2x6 SP No.2

BRACING-
TOP CHORD Structural wood sheathing directly applied or 3-11-4 oc purlins, except end verticals.
BOT CHORD Rigid ceiling directly applied or 10-0-0 oc bracing.

REACTIONS. (size) 5=0-3-8, 3=Mechanical, 4=Mechanical
Max Horz 5=93(LC 14)
Max Uplift 3=-52(LC 14)
Max Grav 5=222(LC 2), 3=99(LC 26), 4=68(LC 5)

FORCES. (lb) - Max. Comp./Max. Ten. - All forces 250 (lb) or less except when shown.

NOTES-
1) Wind: ASCE 7-10; Vult=115mph Vasd=91mph; TCDL=6.0psf; BCDL=6.0psf; h=25ft; Cat. II; Exp B; Enclosed; MWFRS (envelope) gable end zone and C-C Exterior(2) -0-10-8 to 2-1-8, Interior(1) 2-1-8 to 3-10-8 zone;C-C for members and forces & MWFRS for reactions shown; Lumber DOL=1.60 plate grip DOL=1.60
2) TCLL: ASCE 7-10; Pr=20.0 psf (roof live load: Lumber DOL=1.15 Plate DOL=1.15); Pg=15.0 psf (ground snow); Pf=11.6 psf (flat roof snow: Lumber DOL=1.15 Plate DOL=1.15); Category II; Exp B; Partially Exp.; Ct=1.10
3) This truss has been designed for greater of min roof live load of 12.0 psf or 1.00 times flat roof load of 11.6 psf on overhangs non-concurrent with other live loads.
4) This truss has been designed for a 10.0 psf bottom chord live load nonconcurrent with any other live loads.
5) * This truss has been designed for a live load of 20.0psf on the bottom chord in all areas where a rectangle 3-6-0 tall by 2-0-0 wide will fit between the bottom chord and any other members.
6) Refer to girder(s) for truss to truss connections.
7) Provide mechanical connection (by others) of truss to bearing plate capable of withstanding 100 lb uplift at joint(s) 3.

November 24,2020

WARNING - Verify design parameters and READ NOTES ON THIS AND INCLUDED MITEK REFERENCE PAGE MII-7473 rev. 5/19/2020 BEFORE USE.
Design valid for use only with MiTek® connectors. This design is based only upon parameters shown, and is for an individual building component, not a truss system. Before use, the building designer must verify the applicability of design parameters and properly incorporate this design into the overall building design. Bracing indicated is to prevent buckling of individual truss web and/or chord members only. Additional temporary and permanent bracing is always required for stability and to prevent collapse with possible personal injury and property damage. For general guidance regarding the fabrication, storage, delivery, erection and bracing of trusses and truss systems, see **ANSI/TPI1 Quality Criteria, DSB-89 and BCSI Building Component Safety Information** available from Truss Plate Institute, 2670 Crain Highway, Suite 203 Waldorf, MD 20601

ENGINEERING BY TRENCO A MiTek Affiliate
818 Soundside Road
Edenton, NC 27932

Job	Truss	Truss Type	Qty	Ply	KB Home 150.1910.D
150_1910_D	J5	Jack-Open Girder	2	1	I43742716 Job Reference (optional)

84 Components (Dunn), Dunn, NC - 28334, 8.430 s Nov 18 2020 MiTek Industries, Inc. Mon Nov 23 14:43:03 2020 Page 1
ID:VMD62rz1yiHD_OqRtbnrlFztQ8K-IZ5kTGLcTkZrKiQfZa0YErPG6isRIj89f9VueTyGGec

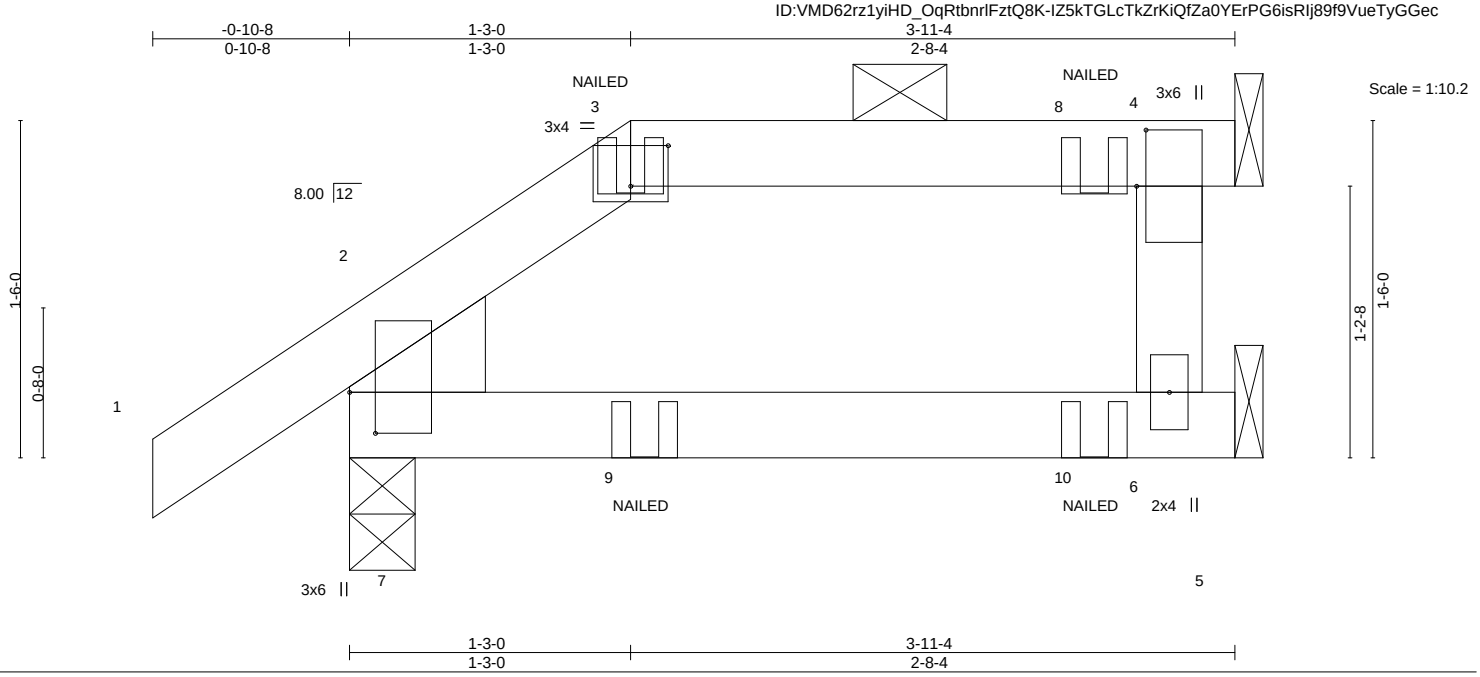

Plate Offsets (X,Y)-- [3:0-2-0,0-2-3], [4:0-3-0,0-0-8], [7:0-2-3,0-1-6]

LOADING (psf)		SPACING- 2-0-0	CSI.		DEFL.	in	(loc)	l/defl	L/d	PLATES	GRIP
TCLL (roof)	20.0	Plate Grip DOL 1.15	TC	0.17	Vert(LL)	-0.01	6-7	>999	240	MT20	197/144
Snow (Pf/Pg)	16.5/15.0	Lumber DOL 1.15	BC	0.13	Vert(CT)	-0.01	6-7	>999	180		
TCDL	10.0	Rep Stress Incr NO	WB	0.00	Horz(CT)	0.02	4	n/a	n/a		
BCLL	0.0 *	Code IRC2015/TPI2014	Matrix-S							Weight: 17 lb	FT = 20%
BCDL	10.0										

LUMBER-
TOP CHORD 2x4 SP No.2 or 2x4 SPF No.2
BOT CHORD 2x4 SP No.2 or 2x4 SPF No.2
WEBS 2x8 SP No.2 *Except*
4-6: 2x4 SP No.3

BRACING-
TOP CHORD Structural wood sheathing directly applied or 3-11-4 oc purlins, except end verticals, and 2-0-0 oc purlins: 3-4.
BOT CHORD Rigid ceiling directly applied or 10-0-0 oc bracing.

REACTIONS. (size) 7=0-3-8, 4=Mechanical, 6=Mechanical
Max Horz 7=40(LC 10)
Max Uplift 7=-23(LC 10), 4=-40(LC 7)
Max Grav 7=218(LC 2), 4=93(LC 28), 6=82(LC 5)

FORCES. (lb) - Max. Comp./Max. Ten. - All forces 250 (lb) or less except when shown.

NOTES-
1) Unbalanced roof live loads have been considered for this design.
2) Wind: ASCE 7-10; Vult=115mph Vasd=91mph; TCDL=6.0psf; BCDL=6.0psf; h=25ft; Cat. II; Exp B; Enclosed; MWFRS (envelope) gable end zone; Lumber DOL=1.60 plate grip DOL=1.60
3) TCLL: ASCE 7-10; Pr=20.0 psf (roof live load: Lumber DOL=1.15 Plate DOL=1.15); Pg=15.0 psf (ground snow); Pf=16.5 psf (flat roof snow: Lumber DOL=1.15 Plate DOL=1.15); Category II; Exp B; Partially Exp.; Ct=1.10, Lu=50-0-0; Min. flat roof snow load governs. Rain surcharge applied to all exposed surfaces with slopes less than 0.500/12 in accordance with IBC 1608.3.4.
4) This truss has been designed for greater of min roof live load of 12.0 psf or 1.00 times flat roof load of 11.6 psf on overhangs non-concurrent with other live loads.
5) Provide adequate drainage to prevent water ponding.
6) This truss has been designed for a 10.0 psf bottom chord live load nonconcurrent with any other live loads.
7) * This truss has been designed for a live load of 20.0psf on the bottom chord in all areas where a rectangle 3-6-0 tall by 2-0-0 wide will fit between the bottom chord and any other members.
8) Refer to girder(s) for truss to truss connections.
9) Provide mechanical connection (by others) of truss to bearing plate capable of withstanding 100 lb uplift at joint(s) 4.
10) One H2.5A Simpson Strong-Tie connectors recommended to connect truss to bearing walls due to UPLIFT at jt(s) 7. This connection is for uplift only and does not consider lateral forces.
11) One MTS12 Simpson Strong-Tie connectors recommended to connect truss to bearing walls due to UPLIFT at jt(s) 6. This connection is for uplift only and does not consider lateral forces.
12) Graphical purlin representation does not depict the size or the orientation of the purlin along the top and/or bottom chord.
13) Gap between inside of top chord bearing and first diagonal or vertical web shall not exceed 0.500in.
14) "NAILED" indicates 3-10d (0.148"x3") or 3-12d (0.148"x3.25") toe-nails per NDS guidlines.
15) In the LOAD CASE(S) section, loads applied to the face of the truss are noted as front (F) or back (B).

LOAD CASE(S) Standard
1) Dead + Snow (balanced): Lumber Increase=1.15, Plate Increase=1.15

November 24,2020

Continued on page 2

WARNING - Verify design parameters and READ NOTES ON THIS AND INCLUDED MITEK REFERENCE PAGE MII-7473 rev. 5/19/2020 BEFORE USE.
Design valid for use only with MiTek® connectors. This design is based only upon parameters shown, and is for an individual building component, not a truss system. Before use, the building designer must verify the applicability of design parameters and properly incorporate this design into the overall building design. Bracing indicated is to prevent buckling of individual truss web and/or chord members only. Additional temporary and permanent bracing is always required for stability and to prevent collapse with possible personal injury and property damage. For general guidance regarding the fabrication, storage, delivery, erection and bracing of trusses and truss systems, see **ANSI/TPI1 Quality Criteria, DSB-89 and BCSI Building Component Safety Information** available from Truss Plate Institute, 2670 Crain Highway, Suite 203 Waldorf, MD 20601

ENGINEERING BY TRENCO A MiTek Affiliate
818 Soundside Road
Edenton, NC 27932

LOAD CASE(S) Standard

Uniform Loads (plf)

Vert: 1-2=-43, 2-3=-43, 3-4=-53, 5-7=-20

Concentrated Loads (lb)

Vert: 8=-2(F) 10=-3(F)

WARNING - Verify design parameters and READ NOTES ON THIS AND INCLUDED MITEK REFERENCE PAGE MII-7473 rev. 5/19/2020 BEFORE USE.
Design valid for use only with MiTek® connectors. This design is based only upon parameters shown, and is for an individual building component, not a truss system. Before use, the building designer must verify the applicability of design parameters and properly incorporate this design into the overall building design. Bracing indicated is to prevent buckling of individual truss web and/or chord members only. Additional temporary and permanent bracing is always required for stability and to prevent collapse with possible personal injury and property damage. For general guidance regarding the fabrication, storage, delivery, erection and bracing of trusses and truss systems, see **ANSI/TPI1 Quality Criteria, DSB-89 and BCSI Building Component Safety Information** available from Truss Plate Institute, 2670 Crain Highway, Suite 203 Waldorf, MD 20601

ENGINEERING BY TRENCO A MiTek Affiliate
818 Soundside Road
Edenton, NC 27932

Job	Truss	Truss Type	Qty	Ply	KB Home 150.1910.D
150_1910_D	J8	Jack-Open	2	1	I43742717 Job Reference (optional)

84 Components (Dunn), Dunn, NC - 28334, 8.430 s Nov 18 2020 MiTek Industries, Inc. Mon Nov 23 14:43:04 2020 Page 1
ID:VMD62rz1yiHD_OqRtbnrlFztQ8K-mlf7hcMEE2hhys?s6HYnn3yQY6CR1AOIupESBvyGGeb

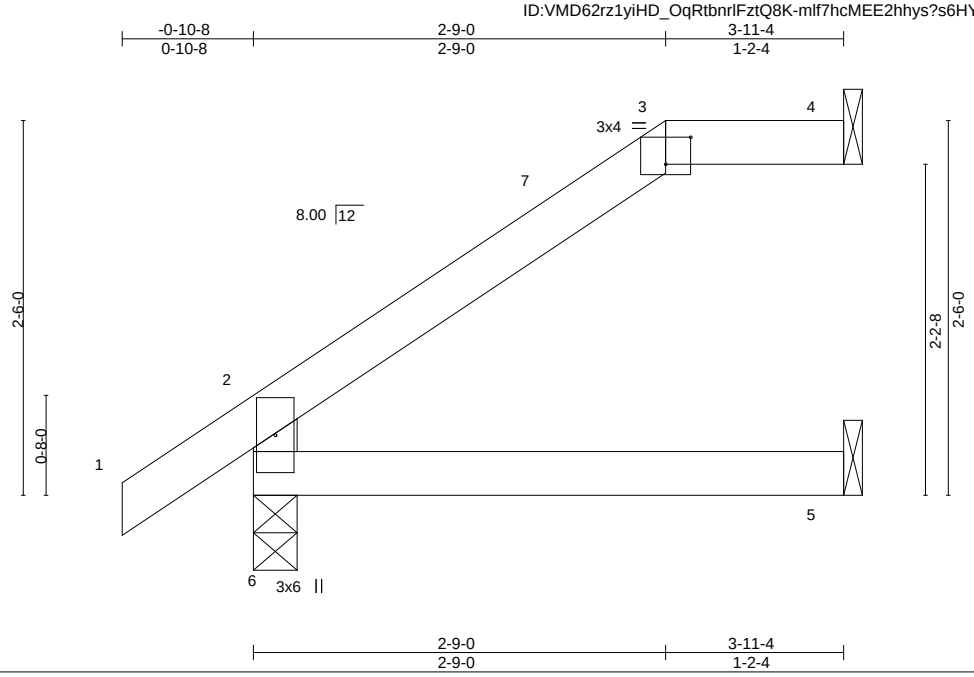

Plate Offsets (X,Y)-- [3:0-2-0,0-2-3]

LOADING (psf)		SPACING-	2-0-0	CSI.		DEFL.	in	(loc)	l/defl	L/d	PLATES	GRIP
TCLL (roof)	20.0	Plate Grip DOL	1.15	TC	0.19	Vert(LL)	-0.01	5-6	>999	240	MT20	197/144
Snow (Pf/Pg)	16.5/15.0	Lumber DOL	1.15	BC	0.15	Vert(CT)	-0.02	5-6	>999	180		
TCDL	10.0	Rep Stress Incr	YES	WB	0.00	Horz(CT)	0.02	4	n/a	n/a		
BCLL	0.0 *	Code IRC2015/TPI2014		Matrix-R							Weight: 15 lb	FT = 20%
BCDL	10.0											

LUMBER-
TOP CHORD 2x4 SP No.2 or 2x4 SPF No.2
BOT CHORD 2x4 SP No.2 or 2x4 SPF No.2
WEBS 2x4 SP No.2 or 2x4 SPF No.2

BRACING-
TOP CHORD Structural wood sheathing directly applied or 3-11-4 oc purlins, except end verticals, and 2-0-0 oc purlins: 3-4.
BOT CHORD Rigid ceiling directly applied or 10-0-0 oc bracing.

REACTIONS. (size) 6=0-3-8, 4=Mechanical, 5=Mechanical
Max Horz 6=71(LC 14)
Max Uplift 6=-6(LC 14), 4=-28(LC 14)
Max Grav 6=219(LC 2), 4=98(LC 2), 5=70(LC 5)

FORCES. (lb) - Max. Comp./Max. Ten. - All forces 250 (lb) or less except when shown.

NOTES-
1) Unbalanced roof live loads have been considered for this design.
2) Wind: ASCE 7-10; Vult=115mph Vasd=91mph; TCDL=6.0psf; BCDL=6.0psf; h=25ft; Cat. II; Exp B; Enclosed; MWFRS (envelope) gable end zone and C-C Exterior(2) -0-10-8 to 2-1-8, Interior(1) 2-1-8 to 2-9-0, Exterior(2) 2-9-0 to 3-10-8 zone;C-C for members and forces & MWFRS for reactions shown; Lumber DOL=1.60 plate grip DOL=1.60
3) TCLL: ASCE 7-10; Pr=20.0 psf (roof live load: Lumber DOL=1.15 Plate DOL=1.15); Pg=15.0 psf (ground snow); Pf=16.5 psf (flat roof snow: Lumber DOL=1.15 Plate DOL=1.15); Category II; Exp B; Partially Exp.; Ct=1.10, Lu=50-0-0; Min. flat roof snow load governs. Rain surcharge applied to all exposed surfaces with slopes less than 0.500/12 in accordance with IBC 1608.3.4.
4) This truss has been designed for greater of min roof live load of 12.0 psf or 1.00 times flat roof load of 11.6 psf on overhangs non-concurrent with other live loads.
5) Provide adequate drainage to prevent water ponding.
6) This truss has been designed for a 10.0 psf bottom chord live load nonconcurrent with any other live loads.
7) * This truss has been designed for a live load of 20.0psf on the bottom chord in all areas where a rectangle 3-6-0 tall by 2-0-0 wide will fit between the bottom chord and any other members.
8) Refer to girder(s) for truss to truss connections.
9) Provide mechanical connection (by others) of truss to bearing plate capable of withstanding 100 lb uplift at joint(s) 4.
10) One H2.5A Simpson Strong-Tie connectors recommended to connect truss to bearing walls due to UPLIFT at jt(s) 6. This connection is for uplift only and does not consider lateral forces.
11) One MTS12 Simpson Strong-Tie connectors recommended to connect truss to bearing walls due to UPLIFT at jt(s) 5. This connection is for uplift only and does not consider lateral forces.
12) Graphical purlin representation does not depict the size or the orientation of the purlin along the top and/or bottom chord.

November 24,2020

WARNING - Verify design parameters and READ NOTES ON THIS AND INCLUDED MITEK REFERENCE PAGE MII-7473 rev. 5/19/2020 BEFORE USE.
Design valid for use only with MiTek® connectors. This design is based only upon parameters shown, and is for an individual building component, not a truss system. Before use, the building designer must verify the applicability of design parameters and properly incorporate this design into the overall building design. Bracing indicated is to prevent buckling of individual truss web and/or chord members only. Additional temporary and permanent bracing is always required for stability and to prevent collapse with possible personal injury and property damage. For general guidance regarding the fabrication, storage, delivery, erection and bracing of trusses and truss systems, see **ANSI/TPI1 Quality Criteria, DSB-89 and BCSI Building Component Safety Information** available from Truss Plate Institute, 2670 Crain Highway, Suite 203 Waldorf, MD 20601

ENGINEERING BY TRENCO A MiTek Affiliate
818 Soundside Road
Edenton, NC 27932

Job	Truss	Truss Type	Qty	Ply	KB Home 150.1910.D
150_1910_D	JC	Jack-Open	4	1	I43742718 Job Reference (optional)

84 Components (Dunn), Dunn, NC - 28334, 8.430 s Nov 18 2020 MiTek Industries, Inc. Mon Nov 23 14:43:05 2020 Page 1
ID:VMD62rz1yiHD_OqRtbnrIFztQ8K-ExDVuyNs_MpYa0a2g?30JGVeSWaKmdeR7T_?jMyGGea

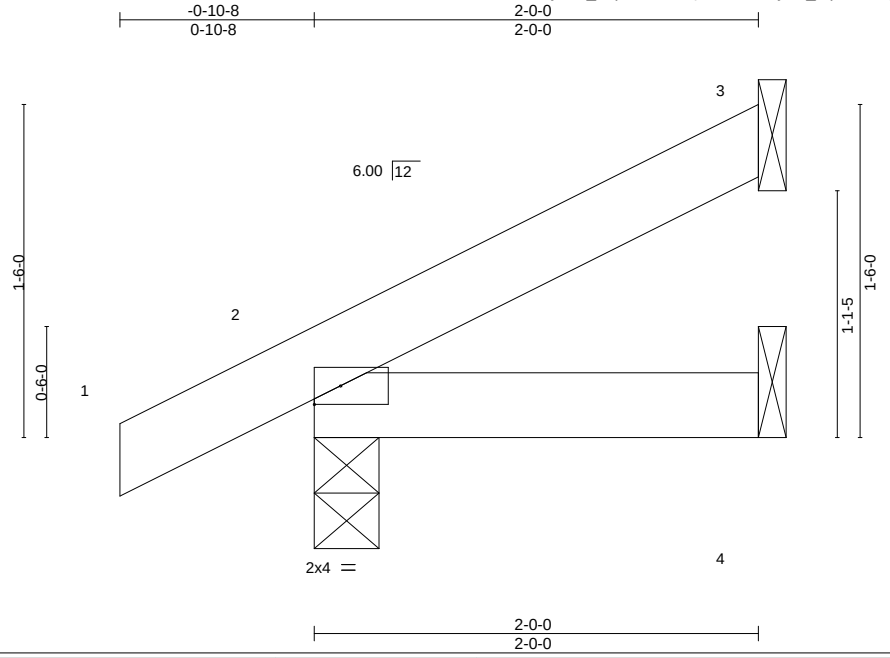

LOADING (psf)		SPACING- 2-0-0	CSI.		DEFL. in (loc) l/defl L/d	PLATES GRIP
TCLL (roof)	20.0	Plate Grip DOL 1.15	TC	0.05	Vert(LL) -0.00 2 >999 240	MT20 197/144
Snow (Pf/Pg)	11.6/15.0	Lumber DOL 1.15	BC	0.04	Vert(CT) -0.00 2-4 >999 180	
TCDL	10.0	Rep Stress Incr YES	WB	0.00	Horz(CT) -0.00 3 n/a n/a	
BCLL	0.0 *	Code IRC2015/TPI2014	Matrix-P			Weight: 8 lb FT = 20%
BCDL	10.0					

LUMBER-
TOP CHORD 2x4 SP No.2 or 2x4 SPF No.2
BOT CHORD 2x4 SP No.2 or 2x4 SPF No.2

BRACING-
TOP CHORD Structural wood sheathing directly applied or 2-0-0 oc purlins.
BOT CHORD Rigid ceiling directly applied or 10-0-0 oc bracing.

REACTIONS. (size) 3=Mechanical, 2=0-3-8, 4=Mechanical
Max Horz 2=42(LC 16)
Max Uplift 3=-25(LC 16), 2=-11(LC 16)
Max Grav 3=46(LC 2), 2=145(LC 2), 4=39(LC 7)

FORCES. (lb) - Max. Comp./Max. Ten. - All forces 250 (lb) or less except when shown.

NOTES-
1) Wind: ASCE 7-10; Vult=115mph Vasd=91mph; TCDL=6.0psf; BCDL=6.0psf; h=25ft; Cat. II; Exp B; Enclosed; MWFRS (envelope) gable end zone and C-C Exterior(2) zone;C-C for members and forces & MWFRS for reactions shown; Lumber DOL=1.60 plate grip DOL=1.60
2) TCLL: ASCE 7-10; Pr=20.0 psf (roof live load: Lumber DOL=1.15 Plate DOL=1.15); Pg=15.0 psf (ground snow); Pf=11.6 psf (flat roof snow: Lumber DOL=1.15 Plate DOL=1.15); Category II; Exp B; Partially Exp.; Ct=1.10
3) Unbalanced snow loads have been considered for this design.
4) This truss has been designed for greater of min roof live load of 12.0 psf or 1.00 times flat roof load of 11.6 psf on overhangs non-concurrent with other live loads.
5) This truss has been designed for a 10.0 psf bottom chord live load nonconcurrent with any other live loads.
6) * This truss has been designed for a live load of 20.0psf on the bottom chord in all areas where a rectangle 3-6-0 tall by 2-0-0 wide will fit between the bottom chord and any other members.
7) Refer to girder(s) for truss to truss connections.
8) Provide mechanical connection (by others) of truss to bearing plate capable of withstanding 100 lb uplift at joint(s) 3.
9) One H2.5A Simpson Strong-Tie connectors recommended to connect truss to bearing walls due to UPLIFT at jt(s) 2. This connection is for uplift only and does not consider lateral forces.

November 24,2020

WARNING - Verify design parameters and READ NOTES ON THIS AND INCLUDED MITEK REFERENCE PAGE MII-7473 rev. 5/19/2020 BEFORE USE.
Design valid for use only with MiTek® connectors. This design is based only upon parameters shown, and is for an individual building component, not a truss system. Before use, the building designer must verify the applicability of design parameters and properly incorporate this design into the overall building design. Bracing indicated is to prevent buckling of individual truss web and/or chord members only. Additional temporary and permanent bracing is always required for stability and to prevent collapse with possible personal injury and property damage. For general guidance regarding the fabrication, storage, delivery, erection and bracing of trusses and truss systems, see **ANSI/TPI1 Quality Criteria, DSB-89 and BCSI Building Component Safety Information** available from Truss Plate Institute, 2670 Crain Highway, Suite 203 Waldorf, MD 20601

ENGINEERING BY TRENCO A MiTek Affiliate
818 Soundside Road
Edenton, NC 27932

Job	Truss	Truss Type	Qty	Ply	KB Home 150.1910.D
150_1910_D	PB1	Piggyback	8	1	I43742719 Job Reference (optional)

84 Components (Dunn), Dunn, NC - 28334, 8.430 s Nov 18 2020 MiTek Industries, Inc. Mon Nov 23 14:43:06 2020 Page 1
ID:VMD62rz1yiHD_OqRtbnrlFztQ8K-j8nt6INUlfyPBA9EEiaFsU1lGwubV4BbM7jZFoyGGeZ

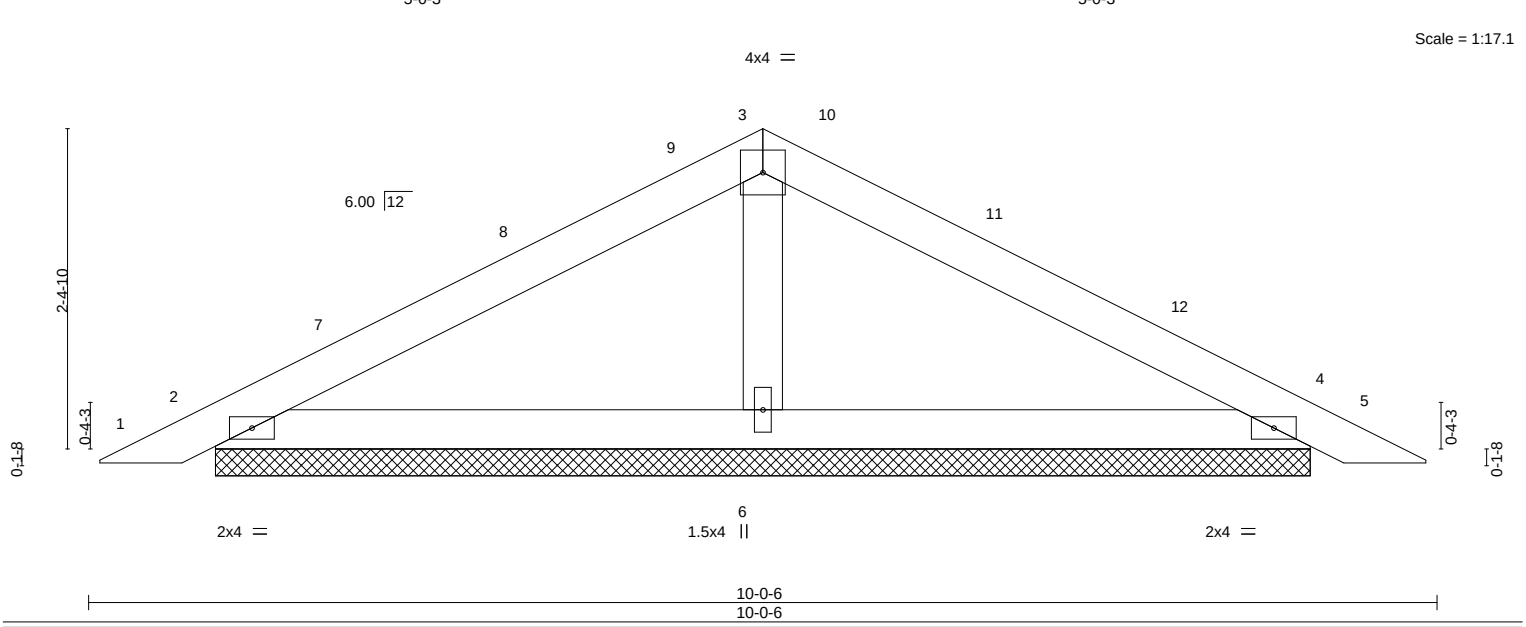

LOADING (psf)		SPACING-	2-0-0	CSI.		DEFL.	in	(loc)	l/defl	L/d	PLATES	GRIP
TCLL (roof)	20.0	Plate Grip DOL	1.15	TC	0.31	Vert(LL)	0.01	5	n/r	120	MT20	197/144
Snow (Pf/Pg)	11.6/15.0	Lumber DOL	1.15	BC	0.17	Vert(CT)	0.02	5	n/r	120		
TCDL	10.0	Rep Stress Incr	YES	WB	0.05	Horz(CT)	0.00	4	n/a	n/a		
BCLL	0.0 *	Code IRC2015/TPI2014		Matrix-P							Weight: 31 lb	FT = 20%
BCDL	10.0											

LUMBER-
TOP CHORD 2x4 SP No.2 or 2x4 SPF No.2
BOT CHORD 2x4 SP No.2 or 2x4 SPF No.2
OTHERS 2x4 SP No.3

BRACING-
TOP CHORD Structural wood sheathing directly applied or 6-0-0 oc purlins.
BOT CHORD Rigid ceiling directly applied or 10-0-0 oc bracing.

REACTIONS. (size) 2=8-1-12, 4=8-1-12, 6=8-1-12
Max Horz 2=-30(LC 17)
Max Uplift 2=-29(LC 16), 4=-35(LC 17)
Max Grav 2=201(LC 2), 4=201(LC 2), 6=317(LC 2)

FORCES. (lb) - Max. Comp./Max. Ten. - All forces 250 (lb) or less except when shown.

NOTES-
1) Unbalanced roof live loads have been considered for this design.
2) Wind: ASCE 7-10; Vult=115mph Vasd=91mph; TCDL=6.0psf; BCDL=6.0psf; h=25ft; Cat. II; Exp B; Enclosed; MWFRS (envelope) gable end zone and C-C Exterior(2) 0-4-11 to 3-4-11, Interior(1) 3-4-11 to 5-0-3, Exterior(2) 5-0-3 to 8-0-3, Interior(1) 8-0-3 to 9-7-12 zone;C-C for members and forces & MWFRS for reactions shown; Lumber DOL=1.60 plate grip DOL=1.60
3) TCLL: ASCE 7-10; Pr=20.0 psf (roof live load: Lumber DOL=1.15 Plate DOL=1.15); Pg=15.0 psf (ground snow); Pf=11.6 psf (flat roof snow: Lumber DOL=1.15 Plate DOL=1.15); Category II; Exp B; Partially Exp.; Ct=1.10
4) Unbalanced snow loads have been considered for this design.
5) This truss has been designed for greater of min roof live load of 12.0 psf or 1.00 times flat roof load of 11.6 psf on overhangs non-concurrent with other live loads.
6) Gable requires continuous bottom chord bearing.
7) This truss has been designed for a 10.0 psf bottom chord live load nonconcurrent with any other live loads.
8) * This truss has been designed for a live load of 20.0psf on the bottom chord in all areas where a rectangle 3-6-0 tall by 2-0-0 wide will fit between the bottom chord and any other members.
9) n/a

10) See Standard Industry Piggyback Truss Connection Detail for Connection to base truss as applicable, or consult qualified building designer.

November 24,2020

WARNING - Verify design parameters and READ NOTES ON THIS AND INCLUDED MITEK REFERENCE PAGE MII-7473 rev. 5/19/2020 BEFORE USE.
Design valid for use only with MiTek® connectors. This design is based only upon parameters shown, and is for an individual building component, not a truss system. Before use, the building designer must verify the applicability of design parameters and properly incorporate this design into the overall building design. Bracing indicated is to prevent buckling of individual truss web and/or chord members only. Additional temporary and permanent bracing is always required for stability and to prevent collapse with possible personal injury and property damage. For general guidance regarding the fabrication, storage, delivery, erection and bracing of trusses and truss systems, see **ANSI/TPI1 Quality Criteria, DSB-89 and BCSI Building Component Safety Information** available from Truss Plate Institute, 2670 Crain Highway, Suite 203 Waldorf, MD 20601

ENGINEERING BY TRENCO A MiTek Affiliate
818 Soundside Road
Edenton, NC 27932

Job	Truss	Truss Type	Qty	Ply	KB Home 150.1910.D
150_1910_D	PB2	Piggyback	2	1	I43742720 Job Reference (optional)

84 Components (Dunn), Dunn, NC - 28334, 8.430 s Nov 18 2020 MiTek Industries, Inc. Mon Nov 23 14:43:07 2020 Page 1
ID:VMD62rz1yiHD_OqRtbnrlFztQ8K-BKKFJeO6Wz4GpKkRoQ5UPhayZKEsEWOkanT6oEyGGeY

2-7-3 | 7-5-3 | 10-0-6
2-7-3 | 4-10-0 | 2-7-3

Scale = 1:17.2

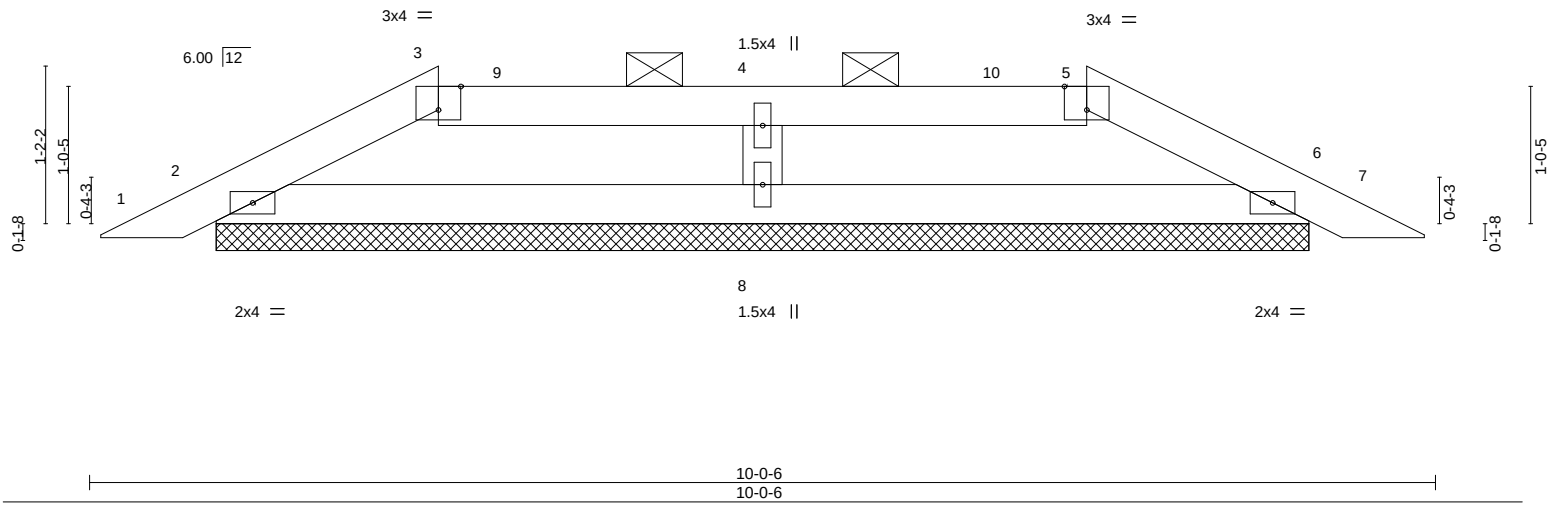

Plate Offsets (X,Y)-- [3:0-2-0,Edge], [5:0-2-0,Edge]

LOADING (psf)		SPACING-	2-0-0	CSI.		DEFL.	in	(loc)	l/defl	L/d	PLATES	GRIP
TCLL (roof)	20.0	Plate Grip DOL	1.15	TC	0.14	Vert(LL)	0.00	7	n/r	120	MT20	197/144
Snow (Pf/Pg)	16.5/15.0	Lumber DOL	1.15	BC	0.16	Vert(CT)	0.00	7	n/r	120		
TCDL	10.0	Rep Stress Incr	YES	WB	0.05	Horz(CT)	0.00	6	n/a	n/a		
BCLL	0.0 *	Code IRC2015/TPI2014		Matrix-S							Weight: 28 lb	FT = 20%
BCDL	10.0											

LUMBER-
TOP CHORD 2x4 SP No.2 or 2x4 SPF No.2
BOT CHORD 2x4 SP No.2 or 2x4 SPF No.2
WEBS 2x4 SP No.3

BRACING-
TOP CHORD Structural wood sheathing directly applied or 6-0-0 oc purlins, except 2-0-0 oc purlins (6-0-0 max.): 3-5.
BOT CHORD Rigid ceiling directly applied or 10-0-0 oc bracing.

REACTIONS. (size) 2=8-1-12, 6=8-1-12, 8=8-1-12
Max Horz 2=-13(LC 17)
Max Uplift 2=-18(LC 16), 6=-18(LC 17), 8=-2(LC 13)
Max Grav 2=215(LC 39), 6=215(LC 39), 8=342(LC 38)

FORCES. (lb) - Max. Comp./Max. Ten. - All forces 250 (lb) or less except when shown.

NOTES-
1) Unbalanced roof live loads have been considered for this design.
2) Wind: ASCE 7-10; Vult=115mph Vasd=91mph; TCDL=6.0psf; BCDL=6.0psf; h=25ft; Cat. II; Exp B; Enclosed; MWFRS (envelope) gable end zone and C-C Exterior(2) 0-4-11 to 6-10-2, Interior(1) 6-10-2 to 7-5-3, Exterior(2) 7-5-3 to 9-7-12 zone;C-C for members and forces & MWFRS for reactions shown; Lumber DOL=1.60 plate grip DOL=1.60
3) TCLL: ASCE 7-10; Pr=20.0 psf (roof live load: Lumber DOL=1.15 Plate DOL=1.15); Pg=15.0 psf (ground snow); Pf=16.5 psf (flat roof snow: Lumber DOL=1.15 Plate DOL=1.15); Category II; Exp B; Partially Exp.; Ct=1.10, Lu=50-0-0; Min. flat roof snow load governs. Rain surcharge applied to all exposed surfaces with slopes less than 0.500/12 in accordance with IBC 1608.3.4.
4) Unbalanced snow loads have been considered for this design.
5) This truss has been designed for greater of min roof live load of 12.0 psf or 1.00 times flat roof load of 11.6 psf on overhangs non-concurrent with other live loads.
6) Provide adequate drainage to prevent water ponding.
7) Gable requires continuous bottom chord bearing.
8) This truss has been designed for a 10.0 psf bottom chord live load nonconcurrent with any other live loads.
9) * This truss has been designed for a live load of 20.0psf on the bottom chord in all areas where a rectangle 3-6-0 tall by 2-0-0 wide will fit between the bottom chord and any other members.
10) n/a

11) See Standard Industry Piggyback Truss Connection Detail for Connection to base truss as applicable, or consult qualified building designer.
12) Graphical purlin representation does not depict the size or the orientation of the purlin along the top and/or bottom chord.

November 24,2020

WARNING - Verify design parameters and READ NOTES ON THIS AND INCLUDED MITEK REFERENCE PAGE MII-7473 rev. 5/19/2020 BEFORE USE.
Design valid for use only with MiTek® connectors. This design is based only upon parameters shown, and is for an individual building component, not a truss system. Before use, the building designer must verify the applicability of design parameters and properly incorporate this design into the overall building design. Bracing indicated is to prevent buckling of individual truss web and/or chord members only. Additional temporary and permanent bracing is always required for stability and to prevent collapse with possible personal injury and property damage. For general guidance regarding the fabrication, storage, delivery, erection and bracing of trusses and truss systems, see **ANSI/TPI1 Quality Criteria, DSB-89 and BCSI Building Component Safety Information** available from Truss Plate Institute, 2670 Crain Highway, Suite 203 Waldorf, MD 20601

ENGINEERING BY TRENCO A MiTek Affiliate
818 Soundside Road
Edenton, NC 27932

Job	Truss	Truss Type	Qty	Ply	KB Home 150.1910.D
150_1910_D	T1	ROOF TRUSS	3	1	I43742721 Job Reference (optional)

84 Components (Dunn), Dunn, NC - 28334, 8.430 s Nov 18 2020 MiTek Industries, Inc. Mon Nov 23 14:43:08 2020 Page 1
ID:VMD62rz1yiHD_OqRtbnrlFztQ8K-fWudW_PlHHC7RUIdL7cjxv70ujN4zr5upRCfKhyGGeX

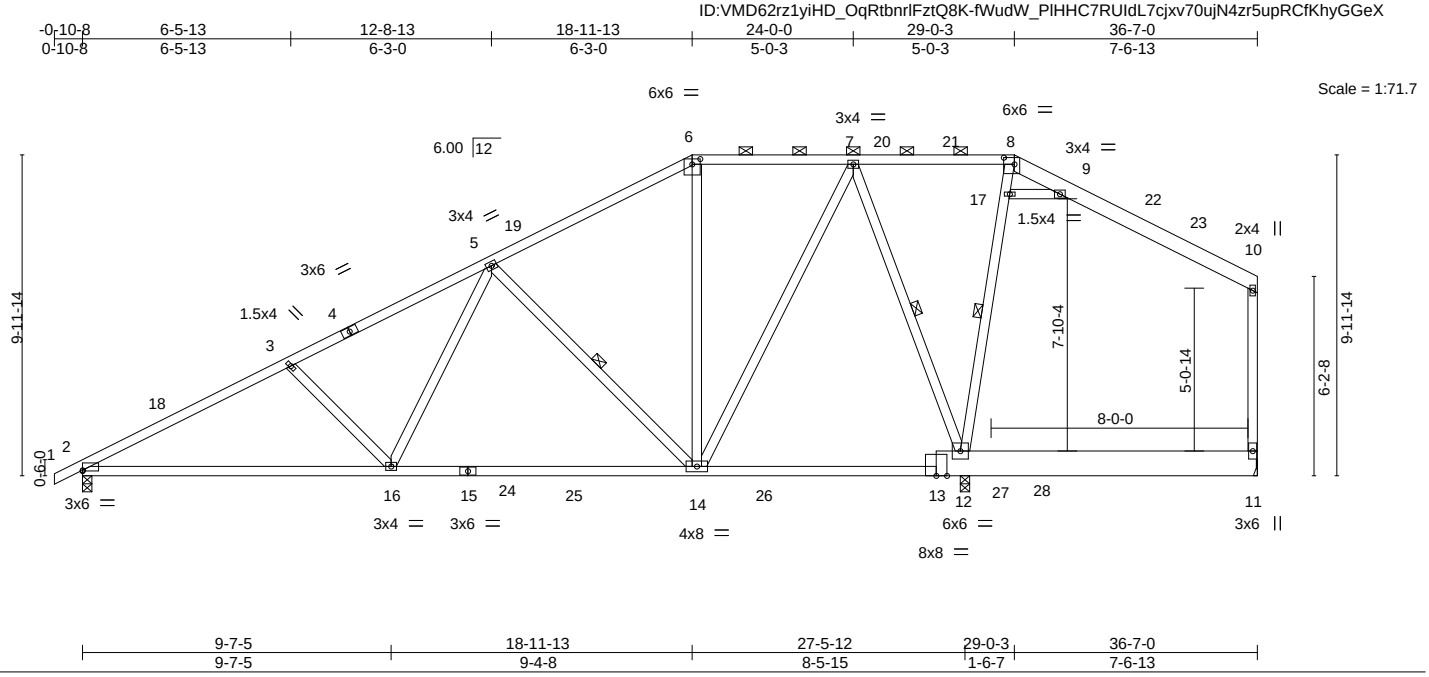

Plate Offsets (X,Y)-- [2:0-0-0,0-0-5], [6:0-3-0,0-2-0], [8:0-4-0,0-2-8]

LOADING (psf)		SPACING- 2-0-0	CSI.		DEFL.	in	(loc)	l/defl	L/d	PLATES	GRIP
TCLL (roof)	20.0	Plate Grip DOL 1.15	TC	0.62	Vert(LL)	-0.24	14-16	>999	240	MT20	197/144
Snow (Pf/Pg)	16.5/15.0	Lumber DOL 1.15	BC	1.00	Vert(CT)	-0.43	2-16	>766	180		
TCDL	10.0	Rep Stress Incr YES	WB	0.53	Horz(CT)	0.05	12	n/a	n/a		
BCLL	0.0 *	Code IRC2015/TPI2014	Matrix-S							Weight: 245 lb	FT = 20%
BCDL	10.0										

LUMBER-

TOP CHORD 2x4 SP No.2 or 2x4 SPF No.2 *Except*
8-10: 2x6 SP No.2
BOT CHORD 2x4 SP No.2 or 2x4 SPF No.2 *Except*
11-13: 2x10 SP No.2
WEBS 2x4 SP No.3 *Except*
10-11: 2x4 SP No.2

BRACING-

TOP CHORD Structural wood sheathing directly applied or 3-4-7 oc purlins, except end verticals, and 2-0-0 oc purlins (6-0-0 max.): 6-8.
BOT CHORD Rigid ceiling directly applied or 2-2-0 oc bracing.
WEBS 1 Row at midpt 5-14, 7-12, 8-12

REACTIONS. (size) 2=0-3-8, 12=0-3-8, 11=Mechanical
Max Horz 2=234(LC 16)
Max Uplift 2=-56(LC 16), 11=-50(LC 17)
Max Grav 2=1138(LC 55), 12=1669(LC 3), 11=417(LC 50)

FORCES. (lb) - Max. Comp./Max. Ten. - All forces 250 (lb) or less except when shown.
TOP CHORD 2-3=-1829/100, 3-5=-1579/92, 5-6=-804/124, 6-7=-642/144, 10-11=-273/96
BOT CHORD 2-16=-250/1558, 14-16=-150/1125, 12-14=-25/343
WEBS 3-16=-322/153, 5-16=0/550, 5-14=-769/157, 7-14=-49/797, 7-12=-1032/105, 12-17=-388/92, 8-17=-379/85

NOTES-

1) Unbalanced roof live loads have been considered for this design.
2) Wind: ASCE 7-10; Vult=115mph Vasd=91mph; TCDL=6.0psf; BCDL=6.0psf; h=25ft; Cat. II; Exp B; Enclosed; MWFRS (envelope) gable end zone and C-C Exterior(2) -0-10-8 to 2-9-6, Interior(1) 2-9-6 to 18-11-13, Exterior(2) 18-11-13 to 24-0-0, Interior(1) 24-0-0 to 29-0-3, Exterior(2) 29-0-3 to 34-2-5, Interior(1) 34-2-5 to 36-5-4 zone;C-C for members and forces & MWFRS for reactions shown; Lumber DOL=1.60 plate grip DOL=1.60
3) TCLL: ASCE 7-10; Pr=20.0 psf (roof live load: Lumber DOL=1.15 Plate DOL=1.15); Pg=15.0 psf (ground snow); Pf=16.5 psf (flat roof snow: Lumber DOL=1.15 Plate DOL=1.15); Category II; Exp B; Partially Exp.; Ct=1.10, Lu=50-0-0; Min. flat roof snow load governs. Rain surcharge applied to all exposed surfaces with slopes less than 0.500/12 in accordance with IBC 1608.3.4.
4) Unbalanced snow loads have been considered for this design.
5) This truss has been designed for greater of min roof live load of 12.0 psf or 1.00 times flat roof load of 11.6 psf on overhangs non-concurrent with other live loads.
6) Provide adequate drainage to prevent water ponding.
7) This truss has been designed for a 10.0 psf bottom chord live load nonconcurrent with any other live loads.
8) * This truss has been designed for a live load of 20.0psf on the bottom chord in all areas where a rectangle 3-6-0 tall by 2-0-0 wide will fit between the bottom chord and any other members, with BCDL = 10.0psf.
9) Refer to girder(s) for truss to truss connections.
10) Provide mechanical connection (by others) of truss to bearing plate capable of withstanding 100 lb uplift at joint(s) 11.
11) One H2.5A Simpson Strong-Tie connectors recommended to connect truss to bearing walls due to UPLIFT at jt(s) 2 and 12. This connection is for uplift only and does not consider lateral forces.
12) Graphical purlin representation does not depict the size or the orientation of the purlin along the top and/or bottom chord.
13) ATTIC SPACE SHOWN IS DESIGNED AS UNINHABITABLE.

November 24,2020

WARNING - Verify design parameters and READ NOTES ON THIS AND INCLUDED MITEK REFERENCE PAGE MII-7473 rev. 5/19/2020 BEFORE USE.
Design valid for use only with MiTek® connectors. This design is based only upon parameters shown, and is for an individual building component, not a truss system. Before use, the building designer must verify the applicability of design parameters and properly incorporate this design into the overall building design. Bracing indicated is to prevent buckling of individual truss web and/or chord members only. Additional temporary and permanent bracing is always required for stability and to prevent collapse with possible personal injury and property damage. For general guidance regarding the fabrication, storage, delivery, erection and bracing of trusses and truss systems, see **ANSI/TPI1 Quality Criteria, DSB-89 and BCSI Building Component Safety Information** available from Truss Plate Institute, 2670 Crain Highway, Suite 203 Waldorf, MD 20601

ENGINEERING BY TRENCO A MiTek Affiliate
818 Soundside Road
Edenton, NC 27932

Job	Truss	Truss Type	Qty	Ply	KB Home 150.1910.D
150_1910_D	T2A	ROOF TRUSS	3	1	I43742722 Job Reference (optional)

84 Components (Dunn), Dunn, NC - 28334, 8.430 s Nov 18 2020 MiTek Industries, Inc. Mon Nov 23 14:43:10 2020 Page 1

ID:VMD62rz1yiHD_OqRtbnrlFztQ8K-bv0OxfQ?puSrgnS?TYeB0KCL3X5cRfhBGkhmOZyGGeV

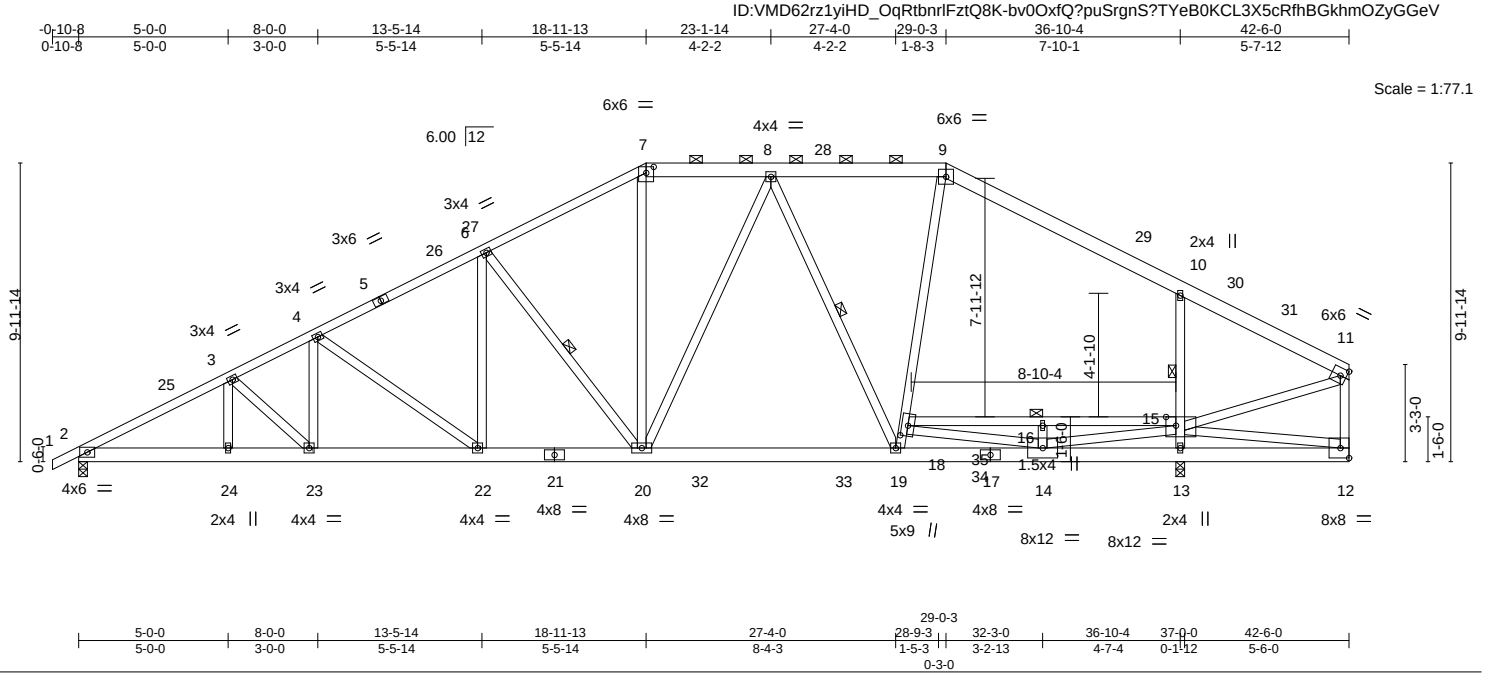

Plate Offsets (X,Y)-- [7:0-3-0,0-2-7], [15:0-4-0,Edge], [18:0-4-4,0-2-8]

LOADING (psf)		**SPACING-** 2-0-0	**CSI.**		**DEFL.**	in	(loc)	l/defl	L/d	**PLATES**	**GRIP**
TCLL (roof)	20.0	Plate Grip DOL 1.15	TC	0.70	Vert(LL)	-0.28	19-20	>999	240	MT20	197/144
Snow (Pf/Pg)	16.5/15.0	Lumber DOL 1.15	BC	0.80	Vert(CT)	-0.54	19-20	>810	180		
TCDL	10.0	Rep Stress Incr YES	WB	0.91	Horz(CT)	0.04	13	n/a	n/a		
BCLL	0.0 *	Code IRC2015/TPI2014	Matrix-S							Weight: 349 lb	FT = 20%
BCDL	10.0										

LUMBER-

TOP CHORD 2x4 SP No.2 or 2x4 SPF No.2 *Except*
7-9,9-11: 2x6 SP No.2

BOT CHORD 2x6 SP No.2 *Except*
15-18: 2x4 SP No.2 or 2x4 SPF No.2

WEBS 2x4 SP No.3 *Except*
12-15: 2x4 SP No.1, 14-15: 2x4 SP No.2 or 2x4 SPF No.2

BRACING-

TOP CHORD Structural wood sheathing directly applied or 3-1-9 oc purlins, except end verticals, and 2-0-0 oc purlins (5-10-6 max.): 7-9.

BOT CHORD Rigid ceiling directly applied or 10-0-0 oc bracing, Except:
2-10-3 oc bracing: 13-14
2-4-4 oc bracing: 12-13.

WEBS 1 Row at midpt 6-20, 8-19, 10-13

JOINTS 1 Brace at Jt(s): 16

REACTIONS. (size) 13=0-3-8 (req. 0-3-13), 2=0-3-8
Max Horz 2=182(LC 16)
Max Uplift 2=-43(LC 16)
Max Grav 13=2422(LC 3), 2=1520(LC 2)

FORCES. (lb) - Max. Comp./Max. Ten. - All forces 250 (lb) or less except when shown.

TOP CHORD 2-3=-2731/62, 3-4=-2539/87, 4-6=-2187/121, 6-7=-1785/150, 7-8=-1532/164, 8-9=-1195/130, 9-10=-1401/111, 10-11=-1257/0, 11-12=-916/20

BOT CHORD 2-24=-165/2342, 23-24=-165/2342, 22-23=-124/2247, 20-22=-53/1905, 19-20=0/1432, 14-19=0/1012, 13-14=-4165/0, 12-13=-4311/0, 16-18=-126/2076, 15-16=-126/2076

WEBS 4-23=0/283, 4-22=-488/88, 6-22=0/395, 6-20=-735/139, 7-20=0/566, 8-20=-59/406, 8-19=-710/107, 18-19=0/784, 9-18=0/443, 13-15=-2018/98, 10-15=-730/185, 14-16=-334/0, 12-15=0/4350, 14-15=0/3531, 14-18=-2011/125, 11-15=0/1221

NOTES-

1) Unbalanced roof live loads have been considered for this design.
2) Wind: ASCE 7-10; Vult=115mph Vasd=91mph; TCDL=6.0psf; BCDL=6.0psf; h=25ft; Cat. II; Exp B; Enclosed; MWFRS (envelope) gable end zone and C-C Exterior(2) -0-10-8 to 3-4-8, Interior(1) 3-4-8 to 18-11-13, Exterior(2) 18-11-13 to 24-11-15, Interior(1) 24-11-15 to 29-0-3, Exterior(2) 29-0-3 to 35-0-5, Interior(1) 35-0-5 to 42-4-4 zone;C-C for members and forces & MWFRS for reactions shown; Lumber DOL=1.60 plate grip DOL=1.60
3) TCLL: ASCE 7-10; Pr=20.0 psf (roof live load: Lumber DOL=1.15 Plate DOL=1.15); Pg=15.0 psf (ground snow); Pf=16.5 psf (flat roof snow: Lumber DOL=1.15 Plate DOL=1.15); Category II; Exp B; Partially Exp.; Ct=1.10, Lu=50-0-0; Min. flat roof snow load governs. Rain surcharge applied to all exposed surfaces with slopes less than 0.500/12 in accordance with IBC 1608.3.4.
4) Unbalanced snow loads have been considered for this design.
5) This truss has been designed for greater of min roof live load of 12.0 psf or 1.00 times flat roof load of 11.6 psf on overhangs non-concurrent with other live loads.
6) Provide adequate drainage to prevent water ponding.
7) This truss has been designed for a 10.0 psf bottom chord live load nonconcurrent with any other live loads.
8) * This truss has been designed for a live load of 20.0psf on the bottom chord in all areas where a rectangle 3-6-0 tall by 2-0-0 wide will fit between the bottom chord and any other members, with BCDL = 10.0psf.
9) WARNING: Required bearing size at joint(s) 13 greater than input bearing size.
10) One RT7A USP connectors recommended to connect truss to bearing walls due to UPLIFT at jt(s) 13 and 2. This connection is for uplift only and does not consider lateral forces.
11) Graphical purlin representation does not depict the size or the orientation of the purlin along the top and/or bottom chord.

November 24,2020

Continued on page 2

WARNING - Verify design parameters and READ NOTES ON THIS AND INCLUDED MITEK REFERENCE PAGE MII-7473 rev. 5/19/2020 BEFORE USE.
Design valid for use only with MiTek® connectors. This design is based only upon parameters shown, and is for an individual building component, not a truss system. Before use, the building designer must verify the applicability of design parameters and properly incorporate this design into the overall building design. Bracing indicated is to prevent buckling of individual truss web and/or chord members only. Additional temporary and permanent bracing is always required for stability and to prevent collapse with possible personal injury and property damage. For general guidance regarding the fabrication, storage, delivery, erection and bracing of trusses and truss systems, see **ANSI/TPI1 Quality Criteria, DSB-89 and BCSI Building Component Safety Information** available from Truss Plate Institute, 2670 Crain Highway, Suite 203 Waldorf, MD 20601

ENGINEERING BY TRENCO A MiTek Affiliate
818 Soundside Road
Edenton, NC 27932

NOTES-

12) ATTIC SPACE SHOWN IS DESIGNED AS UNINHABITABLE.

WARNING - Verify design parameters and READ NOTES ON THIS AND INCLUDED MITEK REFERENCE PAGE MII-7473 rev. 5/19/2020 BEFORE USE.
Design valid for use only with MiTek® connectors. This design is based only upon parameters shown, and is for an individual building component, not a truss system. Before use, the building designer must verify the applicability of design parameters and properly incorporate this design into the overall building design. Bracing indicated is to prevent buckling of individual truss web and/or chord members only. Additional temporary and permanent bracing is always required for stability and to prevent collapse with possible personal injury and property damage. For general guidance regarding the fabrication, storage, delivery, erection and bracing of trusses and truss systems, see **ANSI/TPI1 Quality Criteria, DSB-89 and BCSI Building Component Safety Information** available from Truss Plate Institute, 2670 Crain Highway, Suite 203 Waldorf, MD 20601

ENGINEERING BY TRENCO A MiTek Affiliate
818 Soundside Road
Edenton, NC 27932

Job	Truss	Truss Type	Qty	Ply	KB Home 150.1910.D
150_1910_D	T3A	ROOF TRUSS	2	1	I43742723 Job Reference (optional)

84 Components (Dunn), Dunn, NC - 28334, 8.430 s Nov 18 2020 MiTek Industries, Inc. Mon Nov 23 14:43:13 2020 Page 1

ID:VMD62rz1yiHD_OqRtbnrlFztQ8K-?UiWahTt6pqQXFBa8gCueyqstk9Ee16dziwQ?uyGGeS

-0-10-8	6-5-13	12-8-13	18-11-13	24-0-0	29-0-3	29-3-14	35-3-3	36-8-8	41-6-3	42-4-4	48-0-0	48-10-8
0-10-8	6-5-13	6-3-0	6-3-0	5-0-3	5-0-3	0-3-11	5-11-5	1-5-5	4-9-11	0-10-1	5-7-12	0-10-8

Scale = 1:83.6

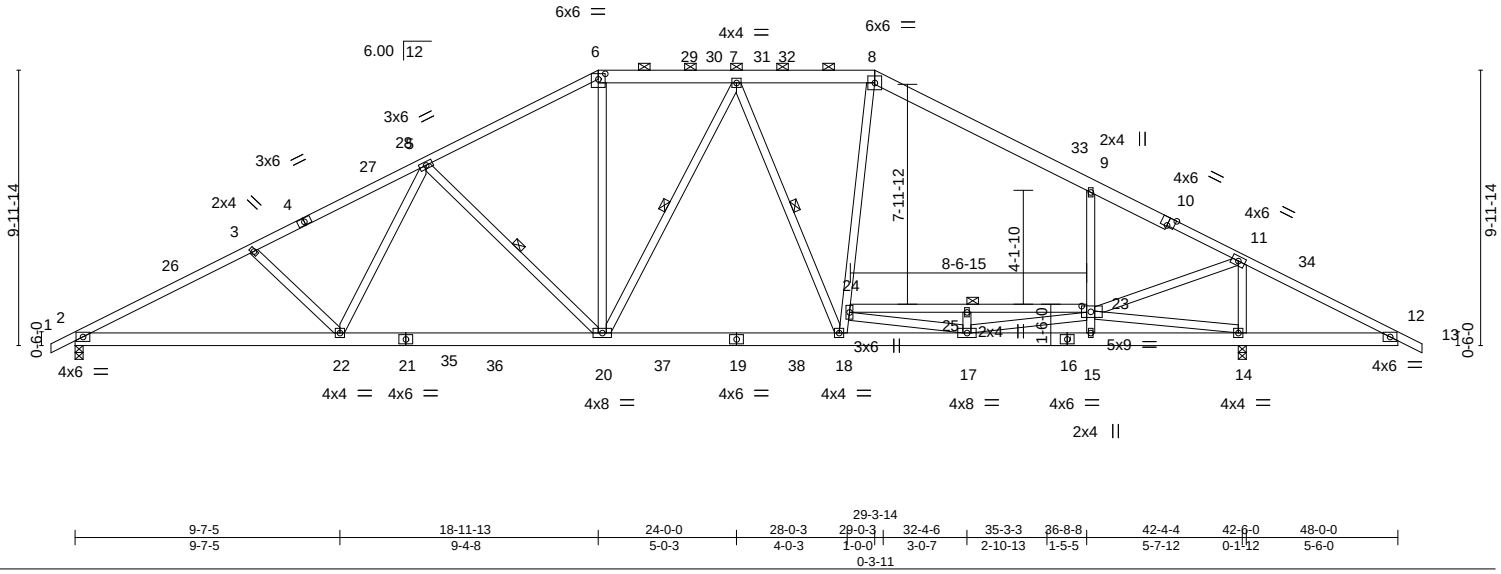

9-7-5	18-11-13	24-0-0	28-0-3	29-0-3 / 29-3-14	32-4-6	35-3-3	36-8-8	42-4-4	42-6-0	48-0-0
9-7-5	9-4-8	5-0-3	4-0-3	1-0-0 / 0-3-11	3-0-7	2-10-13	1-5-5	5-7-12	0-1-12	5-6-0

Plate Offsets (X,Y)-- [6:0-3-0,0-2-7], [10:0-3-0,Edge], [23:0-4-0,0-2-8]

LOADING (psf)		SPACING-	2-0-0	CSI.		DEFL.	in	(loc)	l/defl	L/d	PLATES	GRIP
TCLL (roof)	20.0	Plate Grip DOL	1.15	TC	0.67	Vert(LL)	-0.16	20-22	>999	240	MT20	197/144
Snow (Pf/Pg)	16.5/15.0	Lumber DOL	1.15	BC	0.68	Vert(CT)	-0.31	20-22	>999	180		
TCDL	10.0	Rep Stress Incr	YES	WB	0.86	Horz(CT)	0.07	14	n/a	n/a		
BCLL	0.0 *	Code	IRC2015/TPI2014	Matrix-S							Weight: 353 lb	FT = 20%
BCDL	10.0											

LUMBER-

TOP CHORD 2x4 SP No.2 or 2x4 SPF No.2 *Except* 6-8,8-10: 2x6 SP No.2

BOT CHORD 2x6 SP No.2

WEBS 2x4 SP No.3

BRACING-

TOP CHORD Structural wood sheathing directly applied or 2-7-6 oc purlins, except 2-0-0 oc purlins (5-5-3 max.): 6-8.

BOT CHORD Rigid ceiling directly applied or 6-0-0 oc bracing.

WEBS 1 Row at midpt 5-20, 7-20, 7-18

JOINTS 1 Brace at Jt(s): 25

REACTIONS. (size) 2=0-3-8, 14=0-3-8

Max Horz 2=129(LC 16)

Max Uplift 2=-50(LC 16), 14=-40(LC 17)

Max Grav 2=1713(LC 2), 14=2230(LC 2)

FORCES. (lb) - Max. Comp./Max. Ten. - All forces 250 (lb) or less except when shown.

TOP CHORD 2-3=-3089/155, 3-5=-2827/156, 5-6=-2080/197, 6-7=-1797/206, 7-8=-1579/215, 8-9=-1834/196, 9-11=-1740/74, 11-12=-138/581

BOT CHORD 2-22=-135/2659, 20-22=-33/2251, 18-20=0/1741, 17-18=0/1448, 15-17=-506/441, 14-15=-499/428, 12-14=-447/175

WEBS 3-22=-296/152, 5-22=0/522, 5-20=-738/156, 6-20=-1/627, 7-20=-94/289, 7-18=-529/89, 11-14=-1982/178, 9-23=-582/177, 11-23=-88/2088, 24-25=-77/689, 23-25=-77/689, 17-24=-608/82, 17-23=0/1140, 14-23=-775/390, 18-24=0/686, 8-24=0/510

NOTES-

1) Unbalanced roof live loads have been considered for this design.
2) Wind: ASCE 7-10; Vult=115mph Vasd=91mph; TCDL=6.0psf; BCDL=6.0psf; h=25ft; Cat. II; Exp B; Enclosed; MWFRS (envelope) gable end zone and C-C Exterior(2) -0-10-8 to 3-11-2, Interior(1) 3-11-2 to 18-11-13, Exterior(2) 18-11-13 to 25-9-4, Interior(1) 25-9-4 to 29-0-3, Exterior(2) 29-0-3 to 35-9-11, Interior(1) 35-9-11 to 48-10-8 zone;C-C for members and forces & MWFRS for reactions shown; Lumber DOL=1.60 plate grip DOL=1.60
3) TCLL: ASCE 7-10; Pr=20.0 psf (roof live load: Lumber DOL=1.15 Plate DOL=1.15); Pg=15.0 psf (ground snow); Pf=16.5 psf (flat roof snow: Lumber DOL=1.15 Plate DOL=1.15); Category II; Exp B; Partially Exp.; Ct=1.10, Lu=50-0-0; Min. flat roof snow load governs. Rain surcharge applied to all exposed surfaces with slopes less than 0.500/12 in accordance with IBC 1608.3.4.
4) Unbalanced snow loads have been considered for this design.
5) This truss has been designed for greater of min roof live load of 12.0 psf or 1.00 times flat roof load of 11.6 psf on overhangs non-concurrent with other live loads.
6) Provide adequate drainage to prevent water ponding.
7) This truss has been designed for a 10.0 psf bottom chord live load nonconcurrent with any other live loads.
8) * This truss has been designed for a live load of 20.0psf on the bottom chord in all areas where a rectangle 3-6-0 tall by 2-0-0 wide will fit between the bottom chord and any other members, with BCDL = 10.0psf.
9) One RT7A USP connectors recommended to connect truss to bearing walls due to UPLIFT at jt(s) 2 and 14. This connection is for uplift only and does not consider lateral forces.
10) Graphical purlin representation does not depict the size or the orientation of the purlin along the top and/or bottom chord.
11) ATTIC SPACE SHOWN IS DESIGNED AS UNINHABITABLE.

November 24,2020

WARNING - Verify design parameters and READ NOTES ON THIS AND INCLUDED MITEK REFERENCE PAGE MII-7473 rev. 5/19/2020 BEFORE USE.
Design valid for use only with MiTek® connectors. This design is based only upon parameters shown, and is for an individual building component, not a truss system. Before use, the building designer must verify the applicability of design parameters and properly incorporate this design into the overall building design. Bracing indicated is to prevent buckling of individual truss web and/or chord members only. Additional temporary and permanent bracing is always required for stability and to prevent collapse with possible personal injury and property damage. For general guidance regarding the fabrication, storage, delivery, erection and bracing of trusses and truss systems, see **ANSI/TPI1 Quality Criteria, DSB-89 and BCSI Building Component Safety Information** available from Truss Plate Institute, 2670 Crain Highway, Suite 203 Waldorf, MD 20601

ENGINEERING BY TRENCO A MiTek Affiliate
818 Soundside Road
Edenton, NC 27932

Job	Truss	Truss Type	Qty	Ply	KB Home 150.1910.D
150_1910_D	T4	Piggyback Base	2	1	I43742724 Job Reference (optional)

84 Components (Dunn), Dunn, NC - 28334, 8.430 s Nov 18 2020 MiTek Industries, Inc. Mon Nov 23 14:43:15 2020 Page 1

ID:VMD62rz1yiHD_OqRtbnrlFztQ8K-yspH?NU8eQ48mYLzG5EMjNvC8Yqi6wfwQ0PX4nyGGeQ

-0-10-8	6-5-13	12-8-13	18-11-13	24-0-0	29-0-3	35-3-3	41-6-3	48-0-0	48-10-8
0-10-8	6-5-13	6-3-0	6-3-0	5-0-3	5-0-3	6-3-0	6-3-0	6-5-13	0-10-8

Scale = 1:83.6

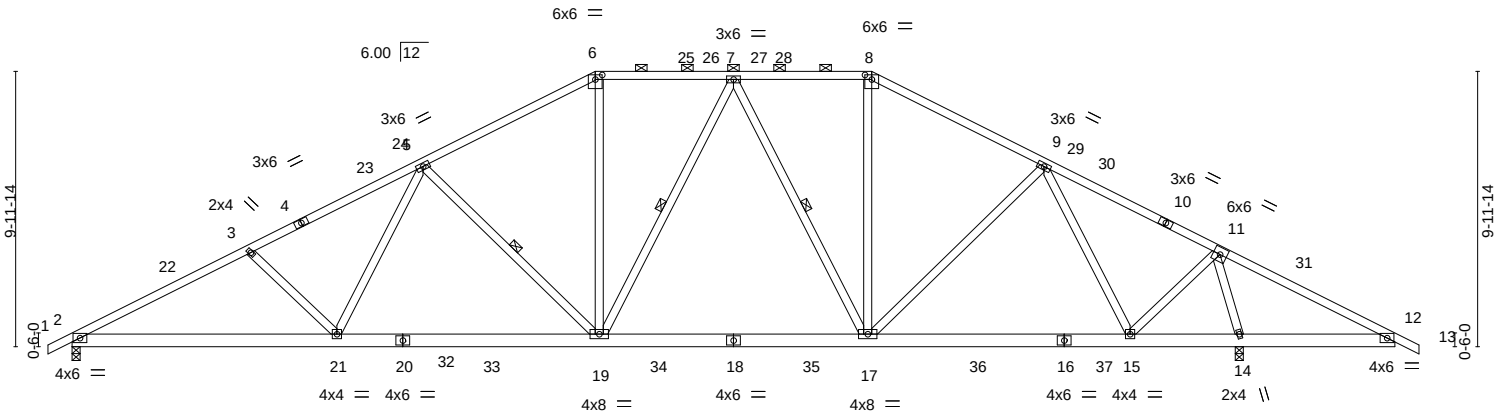

9-7-5	18-11-13	24-0-0	29-0-3	35-3-3	38-4-11	42-4-4	42-6-0	48-0-0
9-7-5	9-4-8	5-0-3	5-0-3	6-3-0	3-1-8	3-11-9	0-1-12	5-6-0

Plate Offsets (X,Y)-- [6:0-3-0,0-2-0], [8:0-3-0,0-2-0]

LOADING (psf)		**SPACING-** 2-0-0	**CSI.**		**DEFL.**	in	(loc)	l/defl	L/d	**PLATES**	**GRIP**
TCLL (roof)	20.0	Plate Grip DOL 1.15	TC	0.68	Vert(LL)	-0.17	17-19	>999	240	MT20	197/144
Snow (Pf/Pg)	16.5/15.0	Lumber DOL 1.15	BC	0.68	Vert(CT)	-0.31	19-21	>999	180		
TCDL	10.0	Rep Stress Incr YES	WB	0.93	Horz(CT)	0.08	14	n/a	n/a		
BCLL	0.0 *	Code IRC2015/TPI2014	Matrix-S							Weight: 316 lb	FT = 20%
BCDL	10.0										

LUMBER-
TOP CHORD 2x4 SP No.2 or 2x4 SPF No.2
BOT CHORD 2x6 SP No.2
WEBS 2x4 SP No.3

BRACING-
TOP CHORD Structural wood sheathing directly applied or 2-7-4 oc purlins, except 2-0-0 oc purlins (4-1-7 max.): 6-8.
BOT CHORD Rigid ceiling directly applied or 6-0-0 oc bracing.
WEBS 1 Row at midpt 5-19, 7-19, 7-17

REACTIONS. (size) 2=0-3-8, 14=0-3-8
Max Horz 2=130(LC 20)
Max Uplift 2=-50(LC 16), 14=-40(LC 17)
Max Grav 2=1716(LC 2), 14=2226(LC 2)

FORCES. (lb) - Max. Comp./Max. Ten. - All forces 250 (lb) or less except when shown.
TOP CHORD 2-3=-3097/156, 3-5=-2853/156, 5-6=-2134/198, 6-7=-1849/206, 7-8=-1601/210, 8-9=-1859/197, 9-11=-1258/117, 11-12=-137/614
BOT CHORD 2-21=-135/2666, 19-21=-34/2280, 17-19=0/1790, 15-17=-12/1428, 12-14=-463/177
WEBS 3-21=-295/151, 5-21=0/521, 5-19=-755/159, 6-19=-3/660, 7-19=-93/262, 7-17=-541/94, 8-17=0/550, 9-17=0/329, 11-15=-14/1362, 11-14=-2116/169, 9-15=-934/118

NOTES-
1) Unbalanced roof live loads have been considered for this design.
2) Wind: ASCE 7-10; Vult=115mph Vasd=91mph; TCDL=6.0psf; BCDL=6.0psf; h=25ft; Cat. II; Exp B; Enclosed; MWFRS (envelope) gable end zone and C-C Exterior(2) -0-10-8 to 3-11-2, Interior(1) 3-11-2 to 18-11-13, Exterior(2) 18-11-13 to 25-9-4, Interior(1) 25-9-4 to 29-0-3, Exterior(2) 29-0-3 to 35-9-11, Interior(1) 35-9-11 to 48-10-8 zone;C-C for members and forces & MWFRS for reactions shown; Lumber DOL=1.60 plate grip DOL=1.60
3) TCLL: ASCE 7-10; Pr=20.0 psf (roof live load: Lumber DOL=1.15 Plate DOL=1.15); Pg=15.0 psf (ground snow); Pf=16.5 psf (flat roof snow: Lumber DOL=1.15 Plate DOL=1.15); Category II; Exp B; Partially Exp.; Ct=1.10, Lu=50-0-0; Min. flat roof snow load governs. Rain surcharge applied to all exposed surfaces with slopes less than 0.500/12 in accordance with IBC 1608.3.4.
4) Unbalanced snow loads have been considered for this design.
5) This truss has been designed for greater of min roof live load of 12.0 psf or 1.00 times flat roof load of 11.6 psf on overhangs non-concurrent with other live loads.
6) Provide adequate drainage to prevent water ponding.
7) This truss has been designed for a 10.0 psf bottom chord live load nonconcurrent with any other live loads.
8) * This truss has been designed for a live load of 20.0psf on the bottom chord in all areas where a rectangle 3-6-0 tall by 2-0-0 wide will fit between the bottom chord and any other members, with BCDL = 10.0psf.
9) One RT7A USP connectors recommended to connect truss to bearing walls due to UPLIFT at jt(s) 2 and 14. This connection is for uplift only and does not consider lateral forces.
10) Graphical purlin representation does not depict the size or the orientation of the purlin along the top and/or bottom chord.

November 24,2020

WARNING - Verify design parameters and READ NOTES ON THIS AND INCLUDED MITEK REFERENCE PAGE MII-7473 rev. 5/19/2020 BEFORE USE.
Design valid for use only with MiTek® connectors. This design is based only upon parameters shown, and is for an individual building component, not a truss system. Before use, the building designer must verify the applicability of design parameters and properly incorporate this design into the overall building design. Bracing indicated is to prevent buckling of individual truss web and/or chord members only. Additional temporary and permanent bracing is always required for stability and to prevent collapse with possible personal injury and property damage. For general guidance regarding the fabrication, storage, delivery, erection and bracing of trusses and truss systems, see **ANSI/TPI1 Quality Criteria, DSB-89 and BCSI Building Component Safety Information** available from Truss Plate Institute, 2670 Crain Highway, Suite 203 Waldorf, MD 20601

ENGINEERING BY TRENCO A MiTek Affiliate
818 Soundside Road
Edenton, NC 27932

Job	Truss	Truss Type	Qty	Ply	KB Home 150.1910.D
150_1910_D	V1	Valley	1	1	I43742725 Job Reference (optional)

84 Components (Dunn), Dunn, NC - 28334, 8.430 s Nov 18 2020 MiTek Industries, Inc. Mon Nov 23 14:43:16 2020 Page 1
ID:VMD62rz1yiHD_OqRtbnrIFztQ8K-Q3NfCjVmPkC_Oiw9pplbGbSXvyJlrbM3fg84cDyGGeP

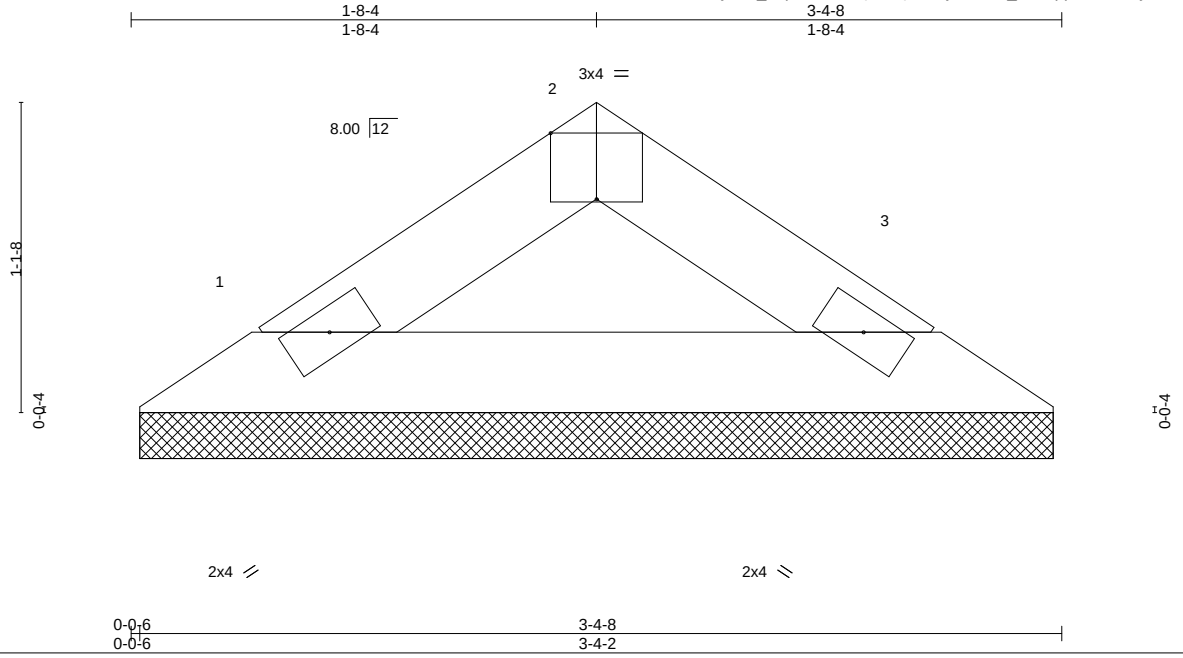

Plate Offsets (X,Y)-- [2:0-2-0,Edge]

LOADING (psf)		SPACING-	2-0-0	CSI.		DEFL.	in	(loc)	l/defl	L/d	PLATES	GRIP
TCLL (roof)	20.0	Plate Grip DOL	1.15	TC	0.04	Vert(LL)	n/a	-	n/a	999	MT20	244/190
Snow (Pf/Pg)	11.6/15.0	Lumber DOL	1.15	BC	0.11	Vert(CT)	n/a	-	n/a	999		
TCDL	10.0	Rep Stress Incr	YES	WB	0.00	Horz(CT)	0.00	3	n/a	n/a		
BCLL	0.0 *	Code IRC2015/TPI2014		Matrix-P							Weight: 9 lb	FT = 20%
BCDL	10.0											

LUMBER-
TOP CHORD 2x4 SP No.3
BOT CHORD 2x4 SP No.3

BRACING-
TOP CHORD Structural wood sheathing directly applied or 3-4-8 oc purlins.
BOT CHORD Rigid ceiling directly applied or 10-0-0 oc bracing.

REACTIONS. (size) 1=3-3-12, 3=3-3-12
Max Horz 1=-16(LC 12)
Max Uplift 1=-2(LC 14), 3=-2(LC 15)
Max Grav 1=96(LC 2), 3=96(LC 2)

FORCES. (lb) - Max. Comp./Max. Ten. - All forces 250 (lb) or less except when shown.

NOTES-
1) Unbalanced roof live loads have been considered for this design.
2) Wind: ASCE 7-10; Vult=115mph Vasd=91mph; TCDL=6.0psf; BCDL=6.0psf; h=25ft; Cat. II; Exp B; Enclosed; MWFRS (envelope) gable end zone and C-C Exterior(2) zone;C-C for members and forces & MWFRS for reactions shown; Lumber DOL=1.60 plate grip DOL=1.60
3) TCLL: ASCE 7-10; Pr=20.0 psf (roof live load: Lumber DOL=1.15 Plate DOL=1.15); Pg=15.0 psf (ground snow); Pf=11.6 psf (flat roof snow: Lumber DOL=1.15 Plate DOL=1.15); Category II; Exp B; Partially Exp.; Ct=1.10
4) Gable requires continuous bottom chord bearing.
5) This truss has been designed for a 10.0 psf bottom chord live load nonconcurrent with any other live loads.
6) * This truss has been designed for a live load of 20.0psf on the bottom chord in all areas where a rectangle 3-6-0 tall by 2-0-0 wide will fit between the bottom chord and any other members.
7) Provide mechanical connection (by others) of truss to bearing plate capable of withstanding 100 lb uplift at joint(s) 1, 3.

November 24,2020

WARNING - Verify design parameters and READ NOTES ON THIS AND INCLUDED MITEK REFERENCE PAGE MII-7473 rev. 5/19/2020 BEFORE USE.
Design valid for use only with MiTek® connectors. This design is based only upon parameters shown, and is for an individual building component, not a truss system. Before use, the building designer must verify the applicability of design parameters and properly incorporate this design into the overall building design. Bracing indicated is to prevent buckling of individual truss web and/or chord members only. Additional temporary and permanent bracing is always required for stability and to prevent collapse with possible personal injury and property damage. For general guidance regarding the fabrication, storage, delivery, erection and bracing of trusses and truss systems, see **ANSI/TPI1 Quality Criteria, DSB-89 and BCSI Building Component Safety Information** available from Truss Plate Institute, 2670 Crain Highway, Suite 203 Waldorf, MD 20601

ENGINEERING BY TRENCO A MiTek Affiliate
818 Soundside Road
Edenton, NC 27932

Job	Truss	Truss Type	Qty	Ply	KB Home 150.1910.D
150_1910_D	V2	Valley	1	1	I43742726 Job Reference (optional)

84 Components (Dunn), Dunn, NC - 28334, 8.430 s Nov 18 2020 MiTek Industries, Inc. Mon Nov 23 14:43:16 2020 Page 1
ID:VMD62rz1yiHD_OqRtbnrIFztQ8K-Q3NfCjVmPkC_Oiw9pplbGbSR8yH7rbm3fg84cDyGGeP

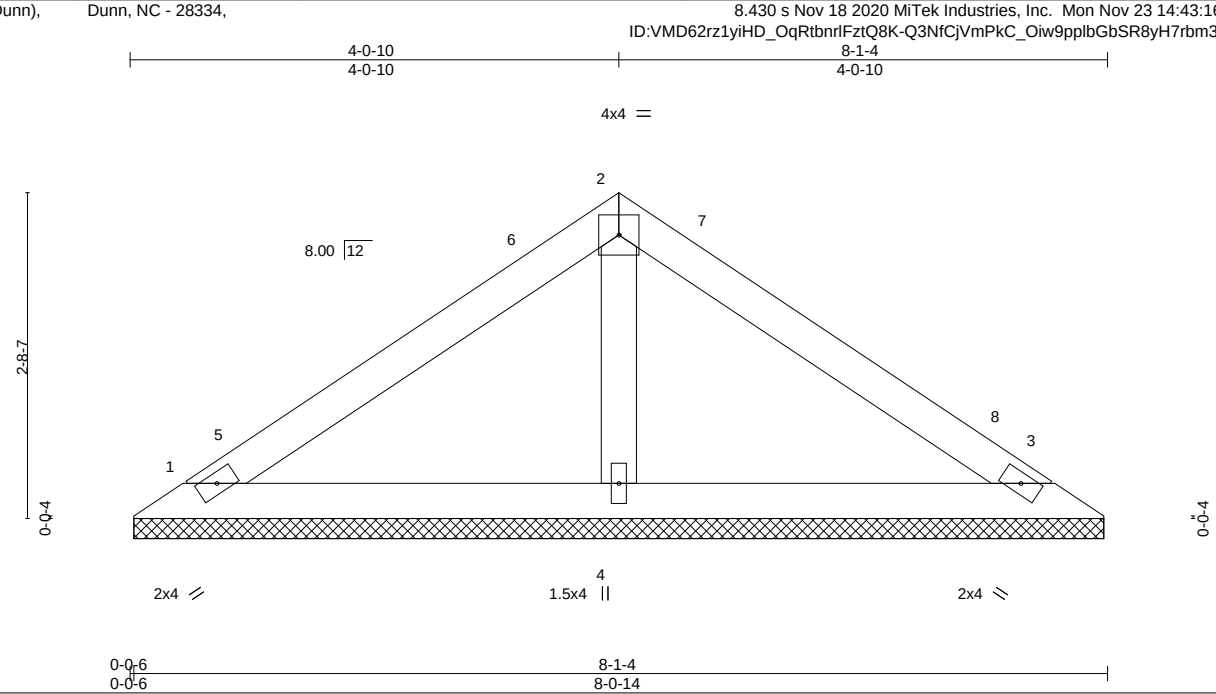

LOADING (psf)		SPACING- 2-0-0	CSI.		DEFL.	in	(loc)	l/defl	L/d	PLATES	GRIP
TCLL (roof)	20.0	Plate Grip DOL 1.15	TC	0.41	Vert(LL)	n/a	-	n/a	999	MT20	244/190
Snow (Pf/Pg)	11.6/15.0	Lumber DOL 1.15	BC	0.22	Vert(CT)	n/a	-	n/a	999		
TCDL	10.0	Rep Stress Incr YES	WB	0.04	Horz(CT)	0.00	3	n/a	n/a		
BCLL	0.0 *	Code IRC2015/TPI2014	Matrix-P							Weight: 28 lb	FT = 20%
BCDL	10.0										

LUMBER-
TOP CHORD 2x4 SP No.3
BOT CHORD 2x4 SP No.3
OTHERS 2x4 SP No.3

BRACING-
TOP CHORD Structural wood sheathing directly applied or 6-0-0 oc purlins.
BOT CHORD Rigid ceiling directly applied or 10-0-0 oc bracing.

REACTIONS. (size) 1=8-0-8, 3=8-0-8, 4=8-0-8
Max Horz 1=-46(LC 10)
Max Uplift 1=-18(LC 14), 3=-24(LC 15)
Max Grav 1=153(LC 2), 3=153(LC 2), 4=265(LC 2)

FORCES. (lb) - Max. Comp./Max. Ten. - All forces 250 (lb) or less except when shown.

NOTES-
1) Unbalanced roof live loads have been considered for this design.
2) Wind: ASCE 7-10; Vult=115mph Vasd=91mph; TCDL=6.0psf; BCDL=6.0psf; h=25ft; Cat. II; Exp B; Enclosed; MWFRS (envelope) gable end zone and C-C Exterior(2) 0-5-12 to 3-5-12, Interior(1) 3-5-12 to 4-0-10, Exterior(2) 4-0-10 to 7-0-10, Interior(1) 7-0-10 to 7-7-7 zone;C-C for members and forces & MWFRS for reactions shown; Lumber DOL=1.60 plate grip DOL=1.60
3) TCLL: ASCE 7-10; Pr=20.0 psf (roof live load: Lumber DOL=1.15 Plate DOL=1.15); Pg=15.0 psf (ground snow); Pf=11.6 psf (flat roof snow: Lumber DOL=1.15 Plate DOL=1.15); Category II; Exp B; Partially Exp.; Ct=1.10
4) Gable requires continuous bottom chord bearing.
5) This truss has been designed for a 10.0 psf bottom chord live load nonconcurrent with any other live loads.
6) * This truss has been designed for a live load of 20.0psf on the bottom chord in all areas where a rectangle 3-6-0 tall by 2-0-0 wide will fit between the bottom chord and any other members.
7) Provide mechanical connection (by others) of truss to bearing plate capable of withstanding 100 lb uplift at joint(s) 1, 3.

November 24,2020

WARNING - Verify design parameters and READ NOTES ON THIS AND INCLUDED MITEK REFERENCE PAGE MII-7473 rev. 5/19/2020 BEFORE USE.
Design valid for use only with MiTek® connectors. This design is based only upon parameters shown, and is for an individual building component, not a truss system. Before use, the building designer must verify the applicability of design parameters and properly incorporate this design into the overall building design. Bracing indicated is to prevent buckling of individual truss web and/or chord members only. Additional temporary and permanent bracing is always required for stability and to prevent collapse with possible personal injury and property damage. For general guidance regarding the fabrication, storage, delivery, erection and bracing of trusses and truss systems, see **ANSI/TPI1 Quality Criteria, DSB-89 and BCSI Building Component Safety Information** available from Truss Plate Institute, 2670 Crain Highway, Suite 203 Waldorf, MD 20601

ENGINEERING BY TRENCO A MiTek Affiliate
818 Soundside Road
Edenton, NC 27932

Job	Truss	Truss Type	Qty	Ply	KB Home 150.1910.D
150_1910_D	V3	Valley	1	1	I43742727 Job Reference (optional)

84 Components (Dunn), Dunn, NC - 28334, 8.430 s Nov 18 2020 MiTek Industries, Inc. Mon Nov 23 14:43:17 2020 Page 1
ID:VMD62rz1yiHD_OqRtbnrlFztQ8K-uFx1P3WOA2Kr0sUMNWGqpo?gJMfca2lCtKue8fyGGeO

Scale = 1:14.0

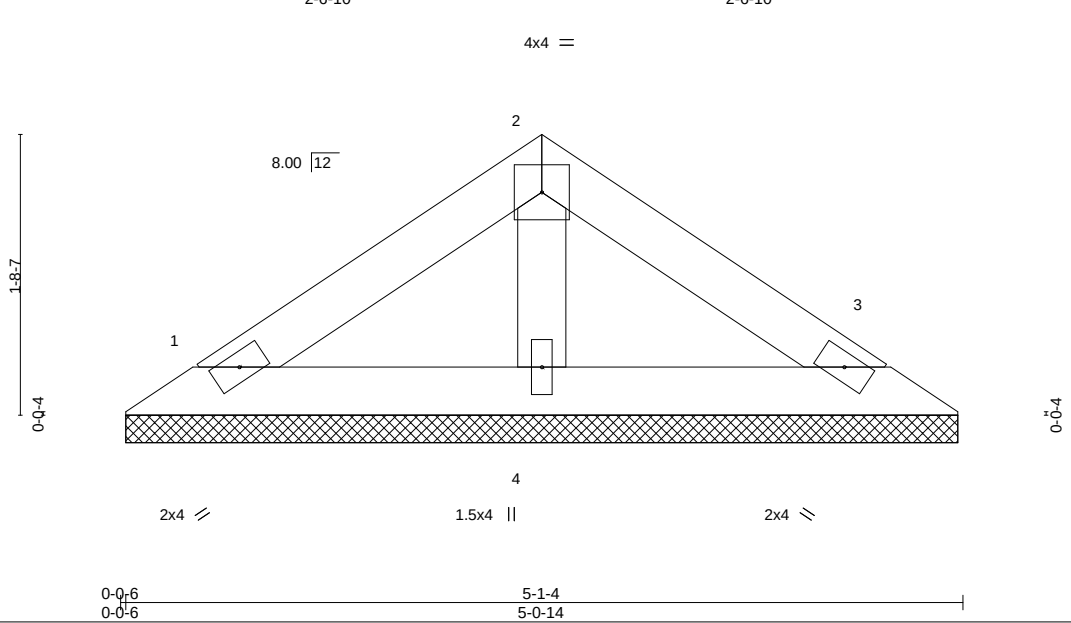

LOADING (psf)		SPACING-	2-0-0	CSI.		DEFL.	in	(loc)	l/defl	L/d	PLATES	GRIP
TCLL (roof)	20.0	Plate Grip DOL	1.15	TC	0.13	Vert(LL)	n/a	-	n/a	999	MT20	244/190
Snow (Pf/Pg)	11.6/15.0	Lumber DOL	1.15	BC	0.07	Vert(CT)	n/a	-	n/a	999		
TCDL	10.0	Rep Stress Incr	YES	WB	0.02	Horz(CT)	0.00	3	n/a	n/a		
BCLL	0.0 *	Code IRC2015/TPI2014		Matrix-P							Weight: 17 lb	FT = 20%
BCDL	10.0											

LUMBER-
TOP CHORD 2x4 SP No.3
BOT CHORD 2x4 SP No.3
OTHERS 2x4 SP No.3

BRACING-
TOP CHORD Structural wood sheathing directly applied or 5-1-4 oc purlins.
BOT CHORD Rigid ceiling directly applied or 10-0-0 oc bracing.

REACTIONS. (size) 1=5-0-8, 3=5-0-8, 4=5-0-8
Max Horz 1=-27(LC 10)
Max Uplift 1=-10(LC 14), 3=-14(LC 15)
Max Grav 1=89(LC 2), 3=89(LC 2), 4=154(LC 2)

FORCES. (lb) - Max. Comp./Max. Ten. - All forces 250 (lb) or less except when shown.

NOTES-
1) Unbalanced roof live loads have been considered for this design.
2) Wind: ASCE 7-10; Vult=115mph Vasd=91mph; TCDL=6.0psf; BCDL=6.0psf; h=25ft; Cat. II; Exp B; Enclosed; MWFRS (envelope) gable end zone and C-C Exterior(2) zone;C-C for members and forces & MWFRS for reactions shown; Lumber DOL=1.60 plate grip DOL=1.60
3) TCLL: ASCE 7-10; Pr=20.0 psf (roof live load: Lumber DOL=1.15 Plate DOL=1.15); Pg=15.0 psf (ground snow); Pf=11.6 psf (flat roof snow: Lumber DOL=1.15 Plate DOL=1.15); Category II; Exp B; Partially Exp.; Ct=1.10
4) Gable requires continuous bottom chord bearing.
5) This truss has been designed for a 10.0 psf bottom chord live load nonconcurrent with any other live loads.
6) * This truss has been designed for a live load of 20.0psf on the bottom chord in all areas where a rectangle 3-6-0 tall by 2-0-0 wide will fit between the bottom chord and any other members.
7) Provide mechanical connection (by others) of truss to bearing plate capable of withstanding 100 lb uplift at joint(s) 1, 3.

November 24,2020

WARNING - Verify design parameters and READ NOTES ON THIS AND INCLUDED MITEK REFERENCE PAGE MII-7473 rev. 5/19/2020 BEFORE USE.
Design valid for use only with MiTek® connectors. This design is based only upon parameters shown, and is for an individual building component, not a truss system. Before use, the building designer must verify the applicability of design parameters and properly incorporate this design into the overall building design. Bracing indicated is to prevent buckling of individual truss web and/or chord members only. Additional temporary and permanent bracing is always required for stability and to prevent collapse with possible personal injury and property damage. For general guidance regarding the fabrication, storage, delivery, erection and bracing of trusses and truss systems, see **ANSI/TPI1 Quality Criteria, DSB-89 and BCSI Building Component Safety Information** available from Truss Plate Institute, 2670 Crain Highway, Suite 203 Waldorf, MD 20601

ENGINEERING BY TRENCO A MiTek Affiliate
818 Soundside Road
Edenton, NC 27932

Symbols

PLATE LOCATION AND ORIENTATION

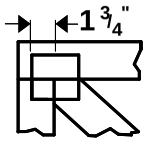

Center plate on joint unless x, y offsets are indicated. Dimensions are in ft-in-sixteenths. Apply plates to both sides of truss and fully embed teeth.

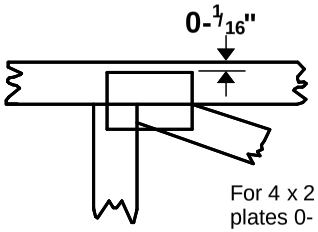

For 4 x 2 orientation, locate plates 0- 1/16" from outside edge of truss.

This symbol indicates the required direction of slots in connector plates.

*** Plate location details available in MiTek 20/20 software or upon request.**

PLATE SIZE

4 x 4

The first dimension is the plate width measured perpendicular to slots. Second dimension is the length parallel to slots.

LATERAL BRACING LOCATION

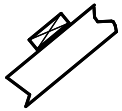

Indicated by symbol shown and/or by text in the bracing section of the output. Use T or I bracing if indicated.

BEARING

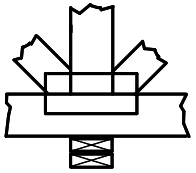

Indicates location where bearings (supports) occur. Icons vary but reaction section indicates joint number where bearings occur. Min size shown is for crushing only.

Industry Standards:

ANSI/TPI1: National Design Specification for Metal Plate Connected Wood Truss Construction.
DSB-89: Design Standard for Bracing.
BCSI: Building Component Safety Information, Guide to Good Practice for Handling, Installing & Bracing of Metal Plate Connected Wood Trusses.

Numbering System

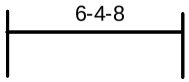

dimensions shown in ft-in-sixteenths
(Drawings not to scale)

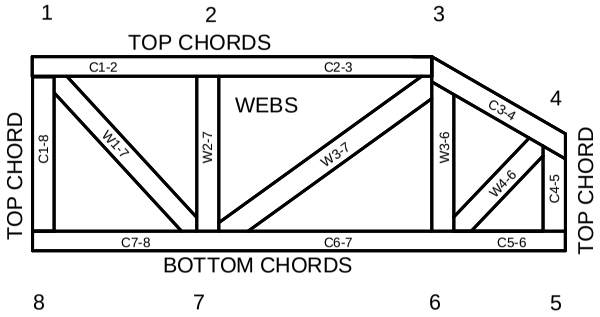

JOINTS ARE GENERALLY NUMBERED/LETTERED CLOCKWISE AROUND THE TRUSS STARTING AT THE JOINT FARTHEST TO THE LEFT.

CHORDS AND WEBS ARE IDENTIFIED BY END JOINT NUMBERS/LETTERS.

PRODUCT CODE APPROVALS

ICC-ES Reports:

ESR-1311, ESR-1352, ESR1988
ER-3907, ESR-2362, ESR-1397, ESR-3282

Trusses are designed for wind loads in the plane of the truss unless otherwise shown.

Lumber design values are in accordance with ANSI/TPI 1 section 6.3 These truss designs rely on lumber values established by others.

© 2012 MiTek® All Rights Reserved

MiTek

ENGINEERING BY TRENCO
A MiTek Affiliate

General Safety Notes

Failure to Follow Could Cause Property Damage or Personal Injury

1. Additional stability bracing for truss system, e.g. diagonal or X-bracing, is always required. See BCSI.
2. Truss bracing must be designed by an engineer. For wide truss spacing, individual lateral braces themselves may require bracing, or alternative Tor I bracing should be considered.
3. Never exceed the design loading shown and never stack materials on inadequately braced trusses.
4. Provide copies of this truss design to the building designer, erection supervisor, property owner and all other interested parties.
5. Cut members to bear tightly against each other.
6. Place plates on each face of truss at each joint and embed fully. Knots and wane at joint locations are regulated by ANSI/TPI 1.
7. Design assumes trusses will be suitably protected from the environment in accord with ANSI/TPI 1.
8. Unless otherwise noted, moisture content of lumber shall not exceed 19% at time of fabrication.
9. Unless expressly noted, this design is not applicable for use with fire retardant, preservative treated, or green lumber.
10. Camber is a non-structural consideration and is the responsibility of truss fabricator. General practice is to camber for dead load deflection.
11. Plate type, size, orientation and location dimensions indicated are minimum plating requirements.
12. Lumber used shall be of the species and size, and in all respects, equal to or better than that specified.
13. Top chords must be sheathed or purlins provided at spacing indicated on design.
14. Bottom chords require lateral bracing at 10 ft. spacing, or less, if no ceiling is installed, unless otherwise noted.
15. Connections not shown are the responsibility of others.
16. Do not cut or alter truss member or plate without prior approval of an engineer.
17. Install and load vertically unless indicated otherwise.
18. Use of green or treated lumber may pose unacceptable environmental, health or performance risks. Consult with project engineer before use.
19. Review all portions of this design (front, back, words and pictures) before use. Reviewing pictures alone is not sufficient.
20. Design assumes manufacture in accordance with ANSI/TPI 1 Quality Criteria.
21. The design does not take into account any dynamic or other loads other than those expressly stated.