ENGINEERING BY TRENCO
A MiTek Affiliate

Trenco
818 Soundside Rd
Edenton, NC 27932

Re: 149_2115_C_Vo_T
KB Home 149.2115.C Vol ceiling and tray

The truss drawing(s) referenced below have been prepared by Truss Engineering Co. under my direct supervision based on the parameters provided by 84 Components - #2383.

Pages or sheets covered by this seal: I48539491 thru I48539537

My license renewal date for the state of North Carolina is December 31, 2021.

North Carolina COA: C-0844

NORTH CAROLINA PROFESSIONAL SEAL 044925 ENGINEER SCOTT M. SEVIER

October 27,2021

Sevier, Scott

IMPORTANT NOTE: The seal on these truss component designs is a certification that the engineer named is licensed in the jurisdiction(s) identified and that the designs comply with ANSI/TPI 1. These designs are based upon parameters shown (e.g., loads, supports, dimensions, shapes and design codes), which were given to MiTek or TRENCO. Any project specific information included is for MiTek's or TRENCO's customers file reference purpose only, and was not taken into account in the preparation of these designs. MiTek or TRENCO has not independently verified the applicability of the design parameters or the designs for any particular building. Before use, the building designer should verify applicability of design parameters and properly incorporate these designs into the overall building design per ANSI/TPI 1, Chapter 2.

Job	Truss	Truss Type	Qty	Ply	KB Home 149.2115.C Vol ceiling and tray
149_2115_C_VO_T	A1V	PIGGYBACK BASE	2	1	I48539491 Job Reference (optional)

84 Components (Dunn), Dunn, NC - 28334, 8.520 s Aug 27 2021 MiTek Industries, Inc. Wed Oct 27 08:07:05 2021 Page 1

ID:bNZHYySm82JAWDNgfw9uCLzLbIt-CHz8?qEK_T9L8hX6ajAtBEptYh7oIvTY96lP_pyPGs4

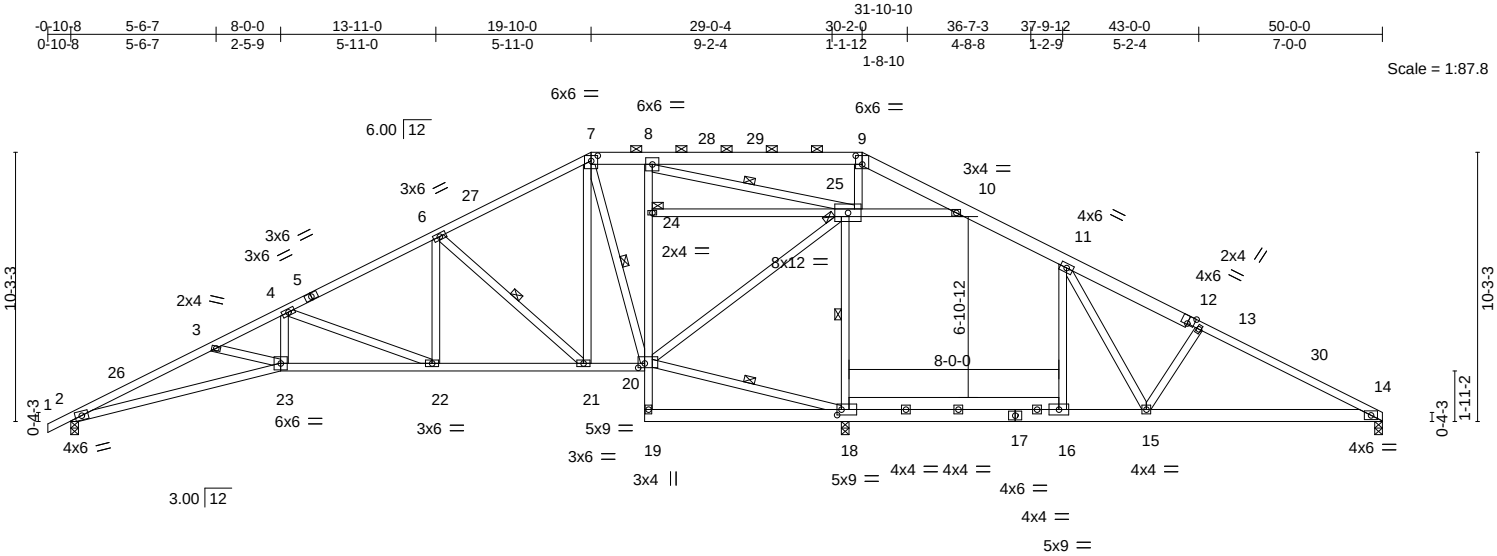

Plate Offsets (X,Y)-- [7:0-3-0,0-2-7], [9:0-3-0,0-4-0], [12:0-3-0,Edge], [18:0-2-0,0-2-8], [20:0-3-0,0-2-0]

LOADING (psf)		SPACING- 2-0-0		CSI.		DEFL.	in	(loc)	l/defl	L/d	PLATES	GRIP
TCLL	20.0	Plate Grip DOL	1.15	TC	0.87	Vert(LL)	-0.24	15-16	>999	240	MT20	197/144
TCDL	10.0	Lumber DOL	1.15	BC	1.00	Vert(CT)	-0.43	2-23	>821	180		
BCLL	0.0 *	Rep Stress Incr	YES	WB	0.90	Horz(CT)	0.13	18	n/a	n/a		
BCDL	10.0	Code IRC2018/TPI2014		Matrix-S							Weight: 382 lb	FT = 20%

LUMBER-

TOP CHORD 2x4 SP No.2 or 2x4 SPF No.2 *Except* 7-9: 2x6 SP No.2, 9-12: 2x6 SP DSS

BOT CHORD 2x4 SP No.2 or 2x4 SPF No.2 *Except* 8-19: 2x4 SP No.3, 17-19,16-18: 2x6 SP No.2, 14-17: 2x6 SP DSS

WEBS 2x4 SP No.3

BRACING-

TOP CHORD Structural wood sheathing directly applied or 3-4-0 oc purlins, except 2-0-0 oc purlins (10-0-0 max.): 7-9.

BOT CHORD Rigid ceiling directly applied.

WEBS 1 Row at midpt 6-21, 7-20, 18-20, 18-25, 8-25

JOINTS 1 Brace at Jt(s): 24, 25

REACTIONS. (size) 2=0-3-8, 18=(0-3-8 + H10A Simpson Strong-Tie) (req. 0-5-9), 14=0-3-8
Max Horz 2=144(LC 11)
Max Uplift 2=-39(LC 12), 18=-3(LC 12), 14=-263(LC 23)
Max Grav 2=795(LC 25), 18=3545(LC 17), 14=385(LC 24)

FORCES. (lb) - Max. Comp./Max. Ten. - All forces 250 (lb) or less except when shown.

TOP CHORD 2-3=-2121/96, 3-4=-1823/47, 4-6=-611/78, 6-7=0/370, 7-8=0/568, 8-9=-40/2819, 9-10=-60/2745, 10-11=0/1580, 11-13=-213/938, 13-14=-439/872

BOT CHORD 2-23=-56/2034, 22-23=0/1636, 21-22=0/519, 20-21=-267/131, 20-24=-35/266, 8-24=-38/263, 16-18=-1217/88, 15-16=-1204/88, 14-15=-746/322

WEBS 4-23=0/798, 4-22=-1194/37, 6-22=0/641, 6-21=-978/69, 7-21=0/790, 7-20=-1057/0, 18-20=-1238/79, 20-25=0/1024, 18-25=-2590/127, 11-16=-511/73, 11-15=-40/1395, 13-15=-534/125, 10-25=-1480/192, 9-25=-1448/108, 8-25=-2366/179, 3-23=-272/89

NOTES-

1) Unbalanced roof live loads have been considered for this design.
2) Wind: ASCE 7-16; Vult=120mph (3-second gust) Vasd=95mph; TCDL=6.0psf; BCDL=6.0psf; h=25ft; B=45ft; L=24ft; eave=6ft; Cat. II; Exp B; Enclosed; MWFRS (directional) and C-C Exterior(2E) -0-10-8 to 2-1-8, Interior(1) 2-1-8 to 19-10-0, Exterior(2R) 19-10-0 to 24-0-15, Interior(1) 24-0-15 to 30-2-0, Exterior(2R) 30-2-0 to 34-1-12, Interior(1) 34-1-12 to 49-10-4 zone;C-C for members and forces & MWFRS for reactions shown; Lumber DOL=1.60 plate grip DOL=1.60
3) Provide adequate drainage to prevent water ponding.
4) This truss has been designed for a 10.0 psf bottom chord live load nonconcurrent with any other live loads.
5) * This truss has been designed for a live load of 20.0psf on the bottom chord in all areas where a rectangle 3-6-0 tall by 2-0-0 wide will fit between the bottom chord and any other members, with BCDL = 10.0psf.
6) Bearing at joint(s) 2 considers parallel to grain value using ANSI/TPI 1 angle to grain formula. Building designer should verify capacity of bearing surface.
7) H10A Simpson Strong-Tie connectors recommended to connect truss to bearing walls due to UPLIFT at jt(s) 18. This connection is for uplift only and does not consider lateral forces.
8) One H2.5A Simpson Strong-Tie connectors recommended to connect truss to bearing walls due to UPLIFT at jt(s) 2 and 14. This connection is for uplift only and does not consider lateral forces.
9) This truss is designed in accordance with the 2018 International Residential Code sections R502.11.1 and R802.10.2 and referenced standard ANSI/TPI 1.
10) Graphical purlin representation does not depict the size or the orientation of the purlin along the top and/or bottom chord.

October 27,2021

WARNING - Verify design parameters and READ NOTES ON THIS AND INCLUDED MITEK REFERENCE PAGE MII-7473 rev. 5/19/2020 BEFORE USE.
Design valid for use only with MiTek® connectors. This design is based only upon parameters shown, and is for an individual building component, not a truss system. Before use, the building designer must verify the applicability of design parameters and properly incorporate this design into the overall building design. Bracing indicated is to prevent buckling of individual truss web and/or chord members only. Additional temporary and permanent bracing is always required for stability and to prevent collapse with possible personal injury and property damage. For general guidance regarding the fabrication, storage, delivery, erection and bracing of trusses and truss systems, see **ANSI/TPI1 Quality Criteria, DSB-89 and BCSI Building Component Safety Information** available from Truss Plate Institute, 2670 Crain Highway, Suite 203 Waldorf, MD 20601

ENGINEERING BY TRENCO A MiTek Affiliate
818 Soundside Road
Edenton, NC 27932

Job	Truss	Truss Type	Qty	Ply	KB Home 149.2115.C Vol ceiling and tray
149_2115_C_VO_T	A2V	PIGGYBACK BASE	1	1	I48539492 Job Reference (optional)

84 Components (Dunn), Dunn, NC - 28334, 8.520 s Aug 27 2021 MiTek Industries, Inc. Wed Oct 27 08:07:07 2021 Page 1

ID:bNZHYySm82JAWDNgfw9uCLzLbIt-8f5vQWGaW5P2O?hVh8DLGfuFEUtJmq7rdQEW2hyPGs2

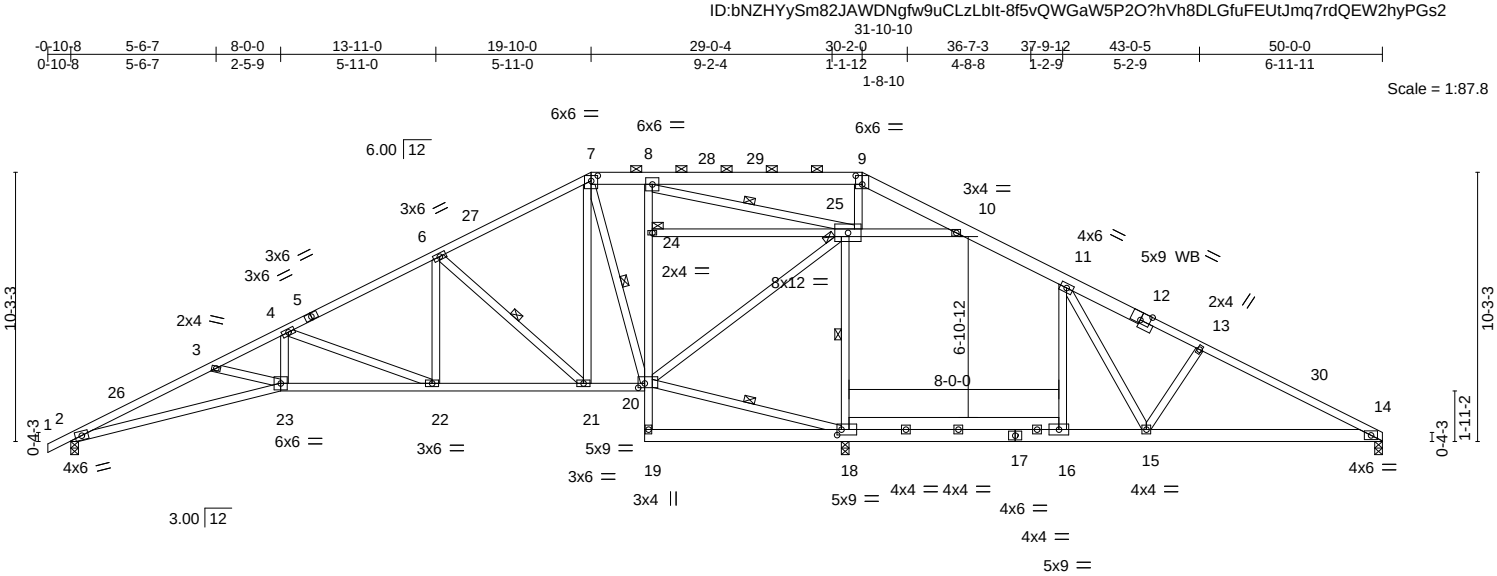

8-0-0 13-11-0 19-10-0 21-10-8 29-8-0 30-2-0 37-9-12 41-0-0 50-0-0
8-0-0 5-11-0 5-11-0 2-0-8 7-9-8 0-6-0 7-7-12 3-2-4 9-0-0

Plate Offsets (X,Y)-- [7:0-3-0,0-2-7], [9:0-3-0,0-4-0], [12:0-4-8,Edge], [18:0-2-0,0-2-8], [20:0-3-0,0-2-0]

LOADING (psf)		SPACING- 2-0-0		CSI.		DEFL.	in	(loc)	l/defl	L/d	PLATES	GRIP
TCLL	20.0	Plate Grip DOL	1.15	TC	0.73	Vert(LL)	-0.25	15-16	>974	240	MT20	197/144
TCDL	10.0	Lumber DOL	1.15	BC	0.74	Vert(CT)	-0.44	15-16	>554	180		
BCLL	0.0 *	Rep Stress Incr	YES	WB	0.89	Horz(CT)	0.12	18	n/a	n/a		
BCDL	10.0	Code IRC2018/TPI2014		Matrix-S							Weight: 381 lb	FT = 20%

LUMBER-

TOP CHORD 2x4 SP No.2 or 2x4 SPF No.2 *Except*
7-9: 2x6 SP No.2, 9-12: 2x6 SP DSS, 12-14: 2x4 SP No.1

BOT CHORD 2x6 SP No.2 *Except*
2-23: 2x4 SP No.1, 20-23: 2x4 SP No.2 or 2x4 SPF No.2
8-19: 2x4 SP No.3, 14-17: 2x6 SP DSS

WEBS 2x4 SP No.3

OTHERS 2x4 SP No.3

BRACING-

TOP CHORD Structural wood sheathing directly applied or 3-4-0 oc purlins, except 2-0-0 oc purlins (10-0-0 max.): 7-9.

BOT CHORD Rigid ceiling directly applied or 6-0-0 oc bracing.

WEBS 1 Row at midpt 6-21, 7-20, 18-20, 18-25, 8-25

JOINTS 1 Brace at Jt(s): 24, 25

REACTIONS. (size) 2=0-3-8, 18=(0-3-8 + H10A Simpson Strong-Tie) (req. 0-5-8), 14=0-3-8
Max Horz 2=144(LC 11)
Max Uplift 2=-39(LC 12), 18=-2(LC 12), 14=-251(LC 23)
Max Grav 2=805(LC 25), 18=3515(LC 17), 14=396(LC 24)

FORCES. (lb) - Max. Comp./Max. Ten. - All forces 250 (lb) or less except when shown.

TOP CHORD 2-3=-2169/98, 3-4=-1872/49, 4-6=-638/79, 6-7=0/336, 7-8=0/534, 8-9=-39/2780, 9-10=-59/2705, 10-11=0/1536, 11-13=-245/905, 13-14=-474/837

BOT CHORD 2-23=-57/2077, 22-23=0/1679, 21-22=0/553, 20-24=-36/264, 8-24=-39/261, 16-18=-1186/87, 15-16=-1173/87, 14-15=-713/356

WEBS 4-23=0/808, 4-22=-1204/38, 6-22=0/646, 6-21=-982/70, 7-21=0/793, 7-20=-1044/0, 18-20=-1205/78, 20-25=0/1021, 18-25=-2561/127, 11-16=-528/74, 11-15=-38/1411, 13-15=-538/123, 10-25=-1483/192, 9-25=-1423/107, 8-25=-2361/179, 3-23=-270/89

NOTES-

1) Unbalanced roof live loads have been considered for this design.
2) Wind: ASCE 7-16; Vult=120mph (3-second gust) Vasd=95mph; TCDL=6.0psf; BCDL=6.0psf; h=25ft; B=45ft; L=24ft; eave=6ft; Cat. II; Exp B; Enclosed; MWFRS (directional) and C-C Exterior(2E) -0-10-8 to 2-1-8, Interior(1) 2-1-8 to 19-10-0, Exterior(2R) 19-10-0 to 24-0-15, Interior(1) 24-0-15 to 30-2-0, Exterior(2R) 30-2-0 to 34-1-12, Interior(1) 34-1-12 to 49-10-4 zone;C-C for members and forces & MWFRS for reactions shown; Lumber DOL=1.60 plate grip DOL=1.60
3) Provide adequate drainage to prevent water ponding.
4) This truss has been designed for a 10.0 psf bottom chord live load nonconcurrent with any other live loads.
5) * This truss has been designed for a live load of 20.0psf on the bottom chord in all areas where a rectangle 3-6-0 tall by 2-0-0 wide will fit between the bottom chord and any other members, with BCDL = 10.0psf.
6) Bearing at joint(s) 2 considers parallel to grain value using ANSI/TPI 1 angle to grain formula. Building designer should verify capacity of bearing surface.
7) H10A Simpson Strong-Tie connectors recommended to connect truss to bearing walls due to UPLIFT at jt(s) 18. This connection is for uplift only and does not consider lateral forces.
8) One H2.5A Simpson Strong-Tie connectors recommended to connect truss to bearing walls due to UPLIFT at jt(s) 2 and 14. This connection is for uplift only and does not consider lateral forces.
9) This truss is designed in accordance with the 2018 International Residential Code sections R502.11.1 and R802.10.2 and referenced standard ANSI/TPI 1.
10) Graphical purlin representation does not depict the size or the orientation of the purlin along the top and/or bottom chord.

NORTH CAROLINA PROFESSIONAL SEAL 044925 ENGINEER SCOTT M. SEVIER

October 27,2021

WARNING - Verify design parameters and READ NOTES ON THIS AND INCLUDED MITEK REFERENCE PAGE MII-7473 rev. 5/19/2020 BEFORE USE.
Design valid for use only with MiTek® connectors. This design is based only upon parameters shown, and is for an individual building component, not a truss system. Before use, the building designer must verify the applicability of design parameters and properly incorporate this design into the overall building design. Bracing indicated is to prevent buckling of individual truss web and/or chord members only. Additional temporary and permanent bracing is always required for stability and to prevent collapse with possible personal injury and property damage. For general guidance regarding the fabrication, storage, delivery, erection and bracing of trusses and truss systems, see **ANSI/TPI1 Quality Criteria, DSB-89 and BCSI Building Component Safety Information** available from Truss Plate Institute, 2670 Crain Highway, Suite 203 Waldorf, MD 20601

ENGINEERING BY TRENCO A MiTek Affiliate
818 Soundside Road
Edenton, NC 27932

Job	Truss	Truss Type	Qty	Ply	KB Home 149.2115.C Vol ceiling and tray
149_2115_C_VO_T	A3V	PIGGYBACK BASE	3	1	I48539493 Job Reference (optional)

84 Components (Dunn), Dunn, NC - 28334, 8.520 s Aug 27 2021 MiTek Industries, Inc. Wed Oct 27 08:07:09 2021 Page 1
ID:bNZHYySm82JAWDNgfw9uCLzLbIt-52DfrBHr2ifmdIqtpYFpL4_bdIWHEmf74kjd7ayPGs0

-0-10-8	5-6-7	8-0-0	13-11-0	19-10-0	30-2-0	37-9-12	43-0-5	43-4-4	50-0-0	50-10-8
0-10-8	5-6-7	2-5-9	5-11-0	5-11-0	10-4-0	7-7-12	5-2-9	0-3-15	6-7-12	0-10-8

Scale = 1:87.9

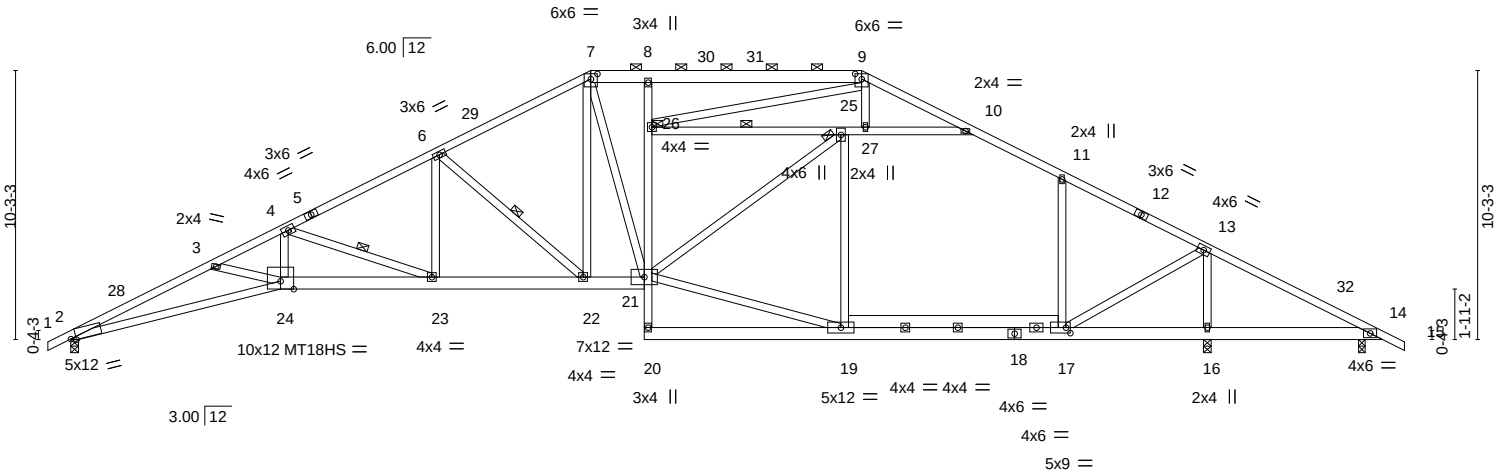

5-6-7	8-0-0	13-11-0	19-10-0	21-10-8	30-2-0	37-9-12	43-4-4	49-4-8	50-0-0
5-6-7	2-5-9	5-11-0	5-11-0	2-0-8	8-3-8	7-7-12	5-6-8	6-0-4	0-7-8

Plate Offsets (X,Y)-- [2:0-2-7,Edge], [7:0-3-0,0-2-7], [9:0-3-0,0-2-7], [17:0-2-0,0-2-8]

LOADING (psf)		SPACING- 2-0-0		CSI.		DEFL.	in	(loc)	l/defl	L/d	PLATES	GRIP
TCLL	20.0	Plate Grip DOL	1.15	TC	0.74	Vert(LL)	-0.42	23-24	>999	240	MT20	197/144
TCDL	10.0	Lumber DOL	1.15	BC	0.84	Vert(CT)	-0.79	23-24	>658	180	MT18HS	244/190
BCLL	0.0 *	Rep Stress Incr	YES	WB	0.76	Horz(CT)	0.37	14	n/a	n/a		
BCDL	10.0	Code IRC2018/TPI2014		Matrix-S							Weight: 382 lb	FT = 20%

LUMBER-

TOP CHORD 2x4 SP No.2 or 2x4 SPF No.2 *Except*
7-9: 2x6 SP No.2, 1-5,12-15: 2x4 SP DSS
BOT CHORD 2x6 SP No.2 *Except*
2-24: 2x4 SP DSS, 21-24: 2x6 SP DSS, 8-20: 2x4 SP No.3
WEBS 2x4 SP No.3 *Except*
10-26: 2x4 SP No.2 or 2x4 SPF No.2

BRACING-

TOP CHORD Structural wood sheathing directly applied or 2-2-0 oc purlins, except 2-0-0 oc purlins (3-11-2 max.): 7-9.
BOT CHORD Rigid ceiling directly applied or 10-0-0 oc bracing.
WEBS 1 Row at midpt 4-23, 6-22, 25-26
JOINTS 1 Brace at Jt(s): 25, 26

REACTIONS. (size) 2=0-3-8, 16=0-3-8, 14=0-3-0
Max Horz 2=-146(LC 10)
Max Uplift 2=-34(LC 12), 16=-44(LC 12), 14=-1(LC 12)
Max Grav 2=1995(LC 17), 16=2035(LC 18), 14=554(LC 1)

FORCES. (lb) - Max. Comp./Max. Ten. - All forces 250 (lb) or less except when shown.
TOP CHORD 2-3=-6910/120, 3-4=-6784/72, 4-6=-4253/101, 6-7=-3102/135, 7-8=-2734/152, 8-9=-2750/153, 9-10=-2247/32, 10-11=-2214/134, 11-13=-2178/78, 13-14=-661/0
BOT CHORD 2-24=-55/6386, 23-24=0/6056, 22-23=0/3839, 21-22=0/2766, 21-26=-309/73, 8-26=-475/109, 17-19=0/1931, 16-17=0/516, 14-16=0/516
WEBS 4-24=0/1713, 4-23=-2356/39, 6-23=0/1088, 6-22=-1391/69, 7-22=0/1113, 7-21=-44/359, 19-21=0/1868, 21-25=0/1092, 19-25=-368/87, 11-17=-405/87, 13-17=0/1682, 13-16=-1899/117, 25-26=-802/122, 10-27=-142/267, 9-27=0/539, 9-26=-121/839

NOTES-

1) Unbalanced roof live loads have been considered for this design.
2) Wind: ASCE 7-16; Vult=120mph (3-second gust) Vasd=95mph; TCDL=6.0psf; BCDL=6.0psf; h=25ft; B=45ft; L=24ft; eave=6ft; Cat. II; Exp B; Enclosed; MWFRS (directional) and C-C Exterior(2E) -0-10-8 to 2-1-8, Interior(1) 2-1-8 to 19-10-0, Exterior(2R) 19-10-0 to 24-0-15, Interior(1) 24-0-15 to 30-2-5, Exterior(2R) 30-2-5 to 34-5-7, Interior(1) 34-5-7 to 50-10-8 zone;C-C for members and forces & MWFRS for reactions shown; Lumber DOL=1.60 plate grip DOL=1.60
3) Provide adequate drainage to prevent water ponding.
4) All plates are MT20 plates unless otherwise indicated.
5) This truss has been designed for a 10.0 psf bottom chord live load nonconcurrent with any other live loads.
6) * This truss has been designed for a live load of 20.0psf on the bottom chord in all areas where a rectangle 3-6-0 tall by 2-0-0 wide will fit between the bottom chord and any other members, with BCDL = 10.0psf.
7) Bearing at joint(s) 2 considers parallel to grain value using ANSI/TPI 1 angle to grain formula. Building designer should verify capacity of bearing surface.
8) One H2.5A Simpson Strong-Tie connectors recommended to connect truss to bearing walls due to UPLIFT at jt(s) 2, 16, and 14. This connection is for uplift only and does not consider lateral forces.
9) This truss is designed in accordance with the 2018 International Residential Code sections R502.11.1 and R802.10.2 and referenced standard ANSI/TPI 1.
10) Graphical purlin representation does not depict the size or the orientation of the purlin along the top and/or bottom chord.

October 27,2021

WARNING - Verify design parameters and READ NOTES ON THIS AND INCLUDED MITEK REFERENCE PAGE MII-7473 rev. 5/19/2020 BEFORE USE.
Design valid for use only with MiTek® connectors. This design is based only upon parameters shown, and is for an individual building component, not a truss system. Before use, the building designer must verify the applicability of design parameters and properly incorporate this design into the overall building design. Bracing indicated is to prevent buckling of individual truss web and/or chord members only. Additional temporary and permanent bracing is always required for stability and to prevent collapse with possible personal injury and property damage. For general guidance regarding the fabrication, storage, delivery, erection and bracing of trusses and truss systems, see **ANSI/TPI1 Quality Criteria, DSB-89 and BCSI Building Component Safety Information** available from Truss Plate Institute, 2670 Crain Highway, Suite 203 Waldorf, MD 20601

ENGINEERING BY TRENCO A MiTek Affiliate
818 Soundside Road
Edenton, NC 27932

Job	Truss	Truss Type	Qty	Ply	KB Home 149.2115.C Vol ceiling and tray
149_2115_C_VO_T	A4V	PIGGYBACK BASE	3	1	I48539494 Job Reference (optional)

84 Components (Dunn), Dunn, NC - 28334, 8.520 s Aug 27 2021 MiTek Industries, Inc. Wed Oct 27 08:07:11 2021 Page 1

ID:bNZHYySm82JAWDNgfw9uCLzLbIt-1RLQGtJ5aJvUsc_GwzHHRV3vL5BqicnQY2CjBSyPGs_

-0-10-8	5-6-7	8-0-0	13-11-0	19-10-0	25-5-0	30-2-0	36-7-3	43-0-5	43-4-4	50-0-0	50-10-8
0-10-8	5-6-7	2-5-9	5-11-0	5-11-0	5-7-0	4-9-0	6-5-3	6-5-3	0-3-15	6-7-12	0-10-8

Scale = 1:87.9

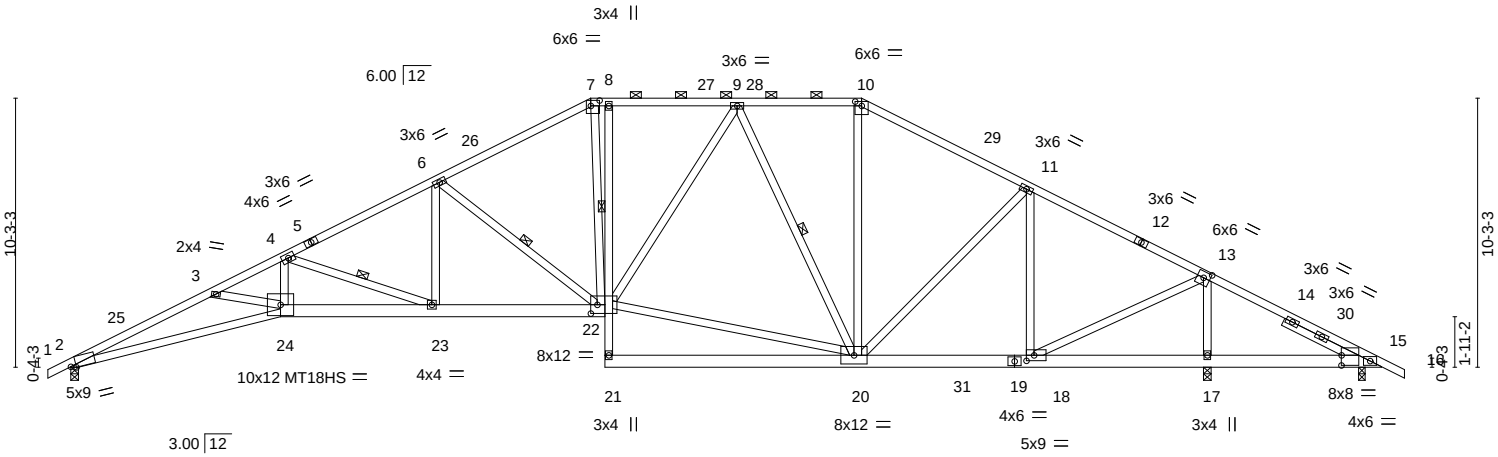

8-0-0	13-11-0	20-4-8	30-2-0	36-7-3	43-4-4	49-4-8	50-0-0
8-0-0	5-11-0	6-5-8	9-9-8	6-5-3	6-9-1	6-0-4	0-7-8

Plate Offsets (X,Y)-- [2:0-2-7,Edge], [7:0-4-0,0-2-8], [10:0-3-0,0-2-0], [13:0-3-0,0-2-12], [15:0-0-1,0-4-10], [18:0-3-8,0-2-8], [22:0-3-0,0-4-0]

LOADING (psf)		**SPACING-** 2-0-0	**CSI.**		**DEFL.** in (loc) l/defl L/d	**PLATES**	**GRIP**
TCLL	20.0	Plate Grip DOL 1.15	TC	0.85	Vert(LL) -0.38 23-24 >999 240	MT20	197/144
TCDL	10.0	Lumber DOL 1.15	BC	0.90	Vert(CT) -0.71 23-24 >728 180	MT18HS	244/190
BCLL	0.0 *	Rep Stress Incr YES	WB	0.97	Horz(CT) 0.34 17 n/a n/a		
BCDL	10.0	Code IRC2018/TPI2014	Matrix-S			Weight: 353 lb	FT = 20%

LUMBER-

TOP CHORD 2x4 SP No.2 or 2x4 SPF No.2 *Except*
1-5,12-16: 2x4 SP No.1

BOT CHORD 2x6 SP No.2 *Except*
2-24: 2x4 SP DSS, 8-21: 2x4 SP No.3

WEBS 2x4 SP No.3 *Except*
13-18: 2x4 SP No.2 or 2x4 SPF No.2

SLIDER Right 2x4 SP No.3 3-1-12

BRACING-

TOP CHORD Structural wood sheathing directly applied or 1-11-7 oc purlins, except
2-0-0 oc purlins (3-10-0 max.): 7-10.

BOT CHORD Rigid ceiling directly applied or 10-0-0 oc bracing, Except:
4-10-9 oc bracing: 17-18
4-10-11 oc bracing: 15-17.
1 Row at midpt 8-22

WEBS 1 Row at midpt 4-23, 6-22, 9-20

REACTIONS. (size) 2=0-3-8, 17=(0-3-8 + H10A Simpson Strong-Tie) (req. 0-5-6), 15=0-3-0
Max Horz 2=-146(LC 10)
Max Uplift 2=-39(LC 12), 17=-8(LC 12), 15=-836(LC 25)
Max Grav 2=1770(LC 17), 17=3423(LC 19)

FORCES. (lb) - Max. Comp./Max. Ten. - All forces 250 (lb) or less except when shown.

TOP CHORD 2-3=-6018/126, 3-4=-5853/76, 4-6=-3574/102, 6-7=-2354/138, 7-8=-2110/147, 8-9=-2105/148, 9-10=-1294/156, 10-11=-1512/149, 11-13=-954/101, 13-15=-38/2421

BOT CHORD 2-24=-60/5575, 23-24=0/5228, 22-23=0/3233, 18-20=0/780, 17-18=-2076/78, 15-17=-2076/78

WEBS 4-24=0/1530, 4-23=-2122/41, 6-23=0/1044, 6-22=-1405/63, 7-22=-11/752, 20-22=0/1692, 9-22=0/816, 9-20=-1059/40, 10-20=0/388, 11-20=0/821, 11-18=-1159/74, 13-18=-9/3101, 13-17=-3091/131

NOTES-

1) Unbalanced roof live loads have been considered for this design.
2) Wind: ASCE 7-16; Vult=120mph (3-second gust) Vasd=95mph; TCDL=6.0psf; BCDL=6.0psf; h=25ft; B=45ft; L=24ft; eave=6ft; Cat. II; Exp B; Enclosed; MWFRS (directional) and C-C Exterior(2E) -0-10-8 to 2-1-8, Interior(1) 2-1-8 to 19-10-0, Exterior(2R) 19-10-0 to 24-0-15, Interior(1) 24-0-15 to 30-2-0, Exterior(2R) 30-2-0 to 34-4-15, Interior(1) 34-4-15 to 50-10-8 zone;C-C for members and forces & MWFRS for reactions shown; Lumber DOL=1.60 plate grip DOL=1.60
3) Provide adequate drainage to prevent water ponding.
4) All plates are MT20 plates unless otherwise indicated.
5) This truss has been designed for a 10.0 psf bottom chord live load nonconcurrent with any other live loads.
6) * This truss has been designed for a live load of 20.0psf on the bottom chord in all areas where a rectangle 3-6-0 tall by 2-0-0 wide will fit between the bottom chord and any other members, with BCDL = 10.0psf.
7) Bearing at joint(s) 2 considers parallel to grain value using ANSI/TPI 1 angle to grain formula. Building designer should verify capacity of bearing surface.
8) H10A Simpson Strong-Tie connectors recommended to connect truss to bearing walls due to UPLIFT at jt(s) 17. This connection is for uplift only and does not consider lateral forces.
9) One H2.5A Simpson Strong-Tie connectors recommended to connect truss to bearing walls due to UPLIFT at jt(s) 2. This connection is for uplift only and does not consider lateral forces.
10) Two H2.5A Simpson Strong-Tie connectors recommended to connect truss to bearing walls due to UPLIFT at jt(s) 15. This connection is for uplift only and does not consider lateral forces.

Continued on page 2

October 27,2021

WARNING - Verify design parameters and READ NOTES ON THIS AND INCLUDED MITEK REFERENCE PAGE MII-7473 rev. 5/19/2020 BEFORE USE.
Design valid for use only with MiTek® connectors. This design is based only upon parameters shown, and is for an individual building component, not a truss system. Before use, the building designer must verify the applicability of design parameters and properly incorporate this design into the overall building design. Bracing indicated is to prevent buckling of individual truss web and/or chord members only. Additional temporary and permanent bracing is always required for stability and to prevent collapse with possible personal injury and property damage. For general guidance regarding the fabrication, storage, delivery, erection and bracing of trusses and truss systems, see **ANSI/TPI1 Quality Criteria, DSB-89 and BCSI Building Component Safety Information** available from Truss Plate Institute, 2670 Crain Highway, Suite 203 Waldorf, MD 20601

ENGINEERING BY TRENCO A MiTek Affiliate
818 Soundside Road
Edenton, NC 27932

NOTES-

11) This truss is designed in accordance with the 2018 International Residential Code sections R502.11.1 and R802.10.2 and referenced standard ANSI/TPI 1.
12) Graphical purlin representation does not depict the size or the orientation of the purlin along the top and/or bottom chord.

WARNING - Verify design parameters and READ NOTES ON THIS AND INCLUDED MITEK REFERENCE PAGE MII-7473 rev. 5/19/2020 BEFORE USE.
Design valid for use only with MiTek® connectors. This design is based only upon parameters shown, and is for an individual building component, not a truss system. Before use, the building designer must verify the applicability of design parameters and properly incorporate this design into the overall building design. Bracing indicated is to prevent buckling of individual truss web and/or chord members only. Additional temporary and permanent bracing is always required for stability and to prevent collapse with possible personal injury and property damage. For general guidance regarding the fabrication, storage, delivery, erection and bracing of trusses and truss systems, see **ANSI/TPI1 Quality Criteria, DSB-89 and BCSI Building Component Safety Information** available from Truss Plate Institute, 2670 Crain Highway, Suite 203 Waldorf, MD 20601

ENGINEERING BY TRENCO A MiTek Affiliate
818 Soundside Road
Edenton, NC 27932

Job	Truss	Truss Type	Qty	Ply	KB Home 149.2115.C Vol ceiling and tray
149_2115_C_VO_T	B1	Common	4	1	I48539495 Job Reference (optional)

84 Components (Dunn), Dunn, NC - 28334, 8.520 s Aug 27 2021 MiTek Industries, Inc. Wed Oct 27 08:07:12 2021 Page 1
ID:bNZHYySm82JAWDNgfw9uCLzLbIt-VdvoTDKjLd1LUmZSUhoWzjb6YVYvRGNamixHivyPGrz

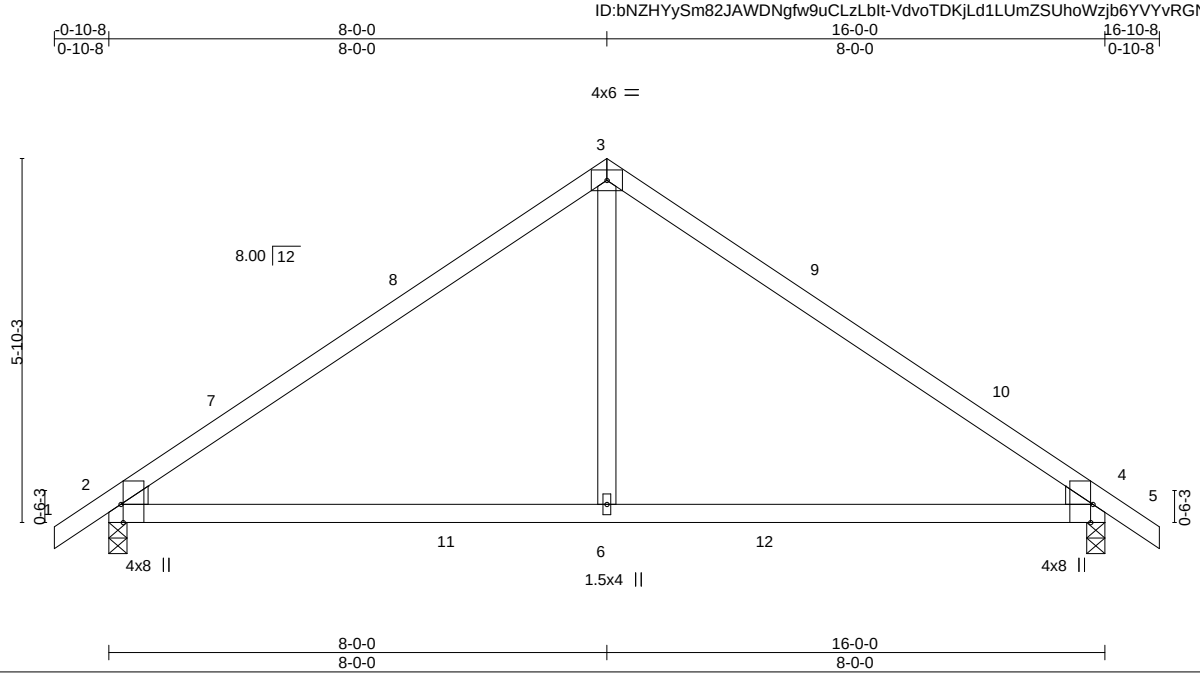

Plate Offsets (X,Y)-- [2:0-3-8,Edge], [4:0-3-8,Edge]

LOADING (psf)		SPACING- 2-0-0		CSI.		DEFL. in (loc) l/defl L/d		PLATES	GRIP
TCLL	20.0	Plate Grip DOL	1.15	TC	0.76	Vert(LL) -0.13 2-6 >999 240		MT20	197/144
TCDL	10.0	Lumber DOL	1.15	BC	0.85	Vert(CT) -0.24 2-6 >788 180			
BCLL	0.0 *	Rep Stress Incr	YES	WB	0.18	Horz(CT) 0.02 4 n/a n/a			
BCDL	10.0	Code IRC2018/TPI2014		Matrix-S				Weight: 65 lb	FT = 20%

LUMBER-
TOP CHORD 2x4 SP No.1
BOT CHORD 2x4 SP No.2 or 2x4 SPF No.2
WEBS 2x4 SP No.3
WEDGE
Left: 2x4 SP No.3 , Right: 2x4 SP No.3

BRACING-
TOP CHORD Structural wood sheathing directly applied or 4-8-2 oc purlins.
BOT CHORD Rigid ceiling directly applied or 10-0-0 oc bracing.

REACTIONS. (size) 2=0-3-8, 4=0-3-8
Max Horz 2=101(LC 11)
Max Uplift 2=-30(LC 12), 4=-30(LC 12)
Max Grav 2=775(LC 17), 4=775(LC 18)

FORCES. (lb) - Max. Comp./Max. Ten. - All forces 250 (lb) or less except when shown.
TOP CHORD 2-3=-854/64, 3-4=-854/64
BOT CHORD 2-6=0/649, 4-6=0/649
WEBS 3-6=0/479

NOTES-
1) Unbalanced roof live loads have been considered for this design.
2) Wind: ASCE 7-16; Vult=120mph (3-second gust) Vasd=95mph; TCDL=6.0psf; BCDL=6.0psf; h=25ft; B=45ft; L=24ft; eave=4ft; Cat. II; Exp B; Enclosed; MWFRS (directional) and C-C Exterior(2E) -0-10-8 to 2-1-8, Interior(1) 2-1-8 to 8-0-0, Exterior(2R) 8-0-0 to 11-0-0, Interior(1) 11-0-0 to 16-10-8 zone; cantilever left and right exposed ; end vertical left and right exposed;C-C for members and forces & MWFRS for reactions shown; Lumber DOL=1.60 plate grip DOL=1.60
3) This truss has been designed for a 10.0 psf bottom chord live load nonconcurrent with any other live loads.
4) * This truss has been designed for a live load of 20.0psf on the bottom chord in all areas where a rectangle 3-6-0 tall by 2-0-0 wide will fit between the bottom chord and any other members, with BCDL = 10.0psf.
5) One H2.5A Simpson Strong-Tie connectors recommended to connect truss to bearing walls due to UPLIFT at jt(s) 2 and 4. This connection is for uplift only and does not consider lateral forces.
6) This truss is designed in accordance with the 2018 International Residential Code sections R502.11.1 and R802.10.2 and referenced standard ANSI/TPI 1.

October 27,2021

WARNING - Verify design parameters and READ NOTES ON THIS AND INCLUDED MITEK REFERENCE PAGE MII-7473 rev. 5/19/2020 BEFORE USE.
Design valid for use only with MiTek® connectors. This design is based only upon parameters shown, and is for an individual building component, not a truss system. Before use, the building designer must verify the applicability of design parameters and properly incorporate this design into the overall building design. Bracing indicated is to prevent buckling of individual truss web and/or chord members only. Additional temporary and permanent bracing is always required for stability and to prevent collapse with possible personal injury and property damage. For general guidance regarding the fabrication, storage, delivery, erection and bracing of trusses and truss systems, see **ANSI/TPI1 Quality Criteria, DSB-89 and BCSI Building Component Safety Information** available from Truss Plate Institute, 2670 Crain Highway, Suite 203 Waldorf, MD 20601

ENGINEERING BY TRENCO A MiTek Affiliate
818 Soundside Road
Edenton, NC 27932

Job	Truss	Truss Type	Qty	Ply	KB Home 149.2115.C Vol ceiling and tray
149_2115_C_VO_T	B2	Common	1	1	I48539496 Job Reference (optional)

84 Components (Dunn), Dunn, NC - 28334, 8.520 s Aug 27 2021 MiTek Industries, Inc. Wed Oct 27 08:07:12 2021 Page 1
ID:bNZHYySm82JAWDNgfw9uCLzLbIt-VdvoTDKjLd1LUmZSUhoWzjb5lVYxRGMamixHivyPGrz

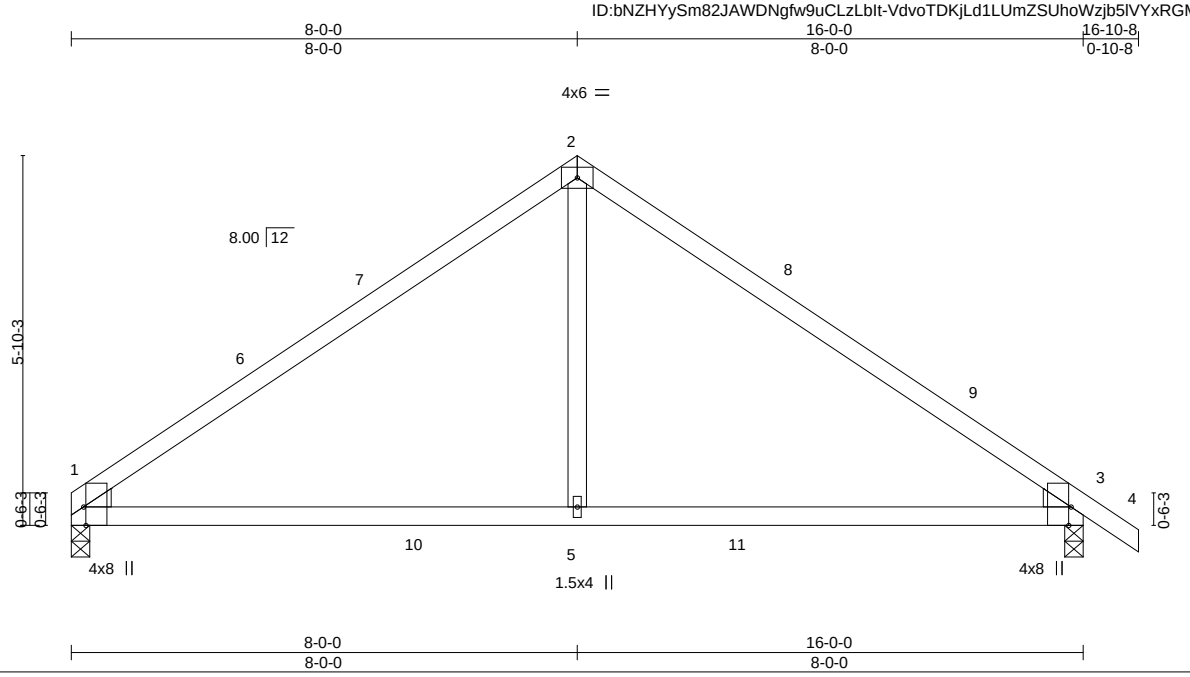

Plate Offsets (X,Y)-- [1:0-3-8,Edge], [3:0-3-8,Edge]

LOADING (psf)		SPACING- 2-0-0		CSI.		DEFL. in (loc) l/defl L/d					PLATES	GRIP
TCLL	20.0	Plate Grip DOL	1.15	TC	0.81	Vert(LL)	-0.13	3-5	>999	240	MT20	197/144
TCDL	10.0	Lumber DOL	1.15	BC	0.84	Vert(CT)	-0.24	3-5	>793	180		
BCLL	0.0 *	Rep Stress Incr	YES	WB	0.18	Horz(CT)	0.02	3	n/a	n/a		
BCDL	10.0	Code IRC2018/TPI2014		Matrix-S							Weight: 64 lb	FT = 20%

LUMBER-
TOP CHORD 2x4 SP No.1
BOT CHORD 2x4 SP No.2 or 2x4 SPF No.2
WEBS 2x4 SP No.3
WEDGE
Left: 2x4 SP No.3 , Right: 2x4 SP No.3

BRACING-
TOP CHORD Structural wood sheathing directly applied or 2-4-4 oc purlins.
BOT CHORD Rigid ceiling directly applied or 10-0-0 oc bracing.

REACTIONS. (size) 3=0-3-8, 1=0-3-8
Max Horz 1=-99(LC 10)
Max Uplift 3=-31(LC 12), 1=-4(LC 12)
Max Grav 3=776(LC 18), 1=719(LC 17)

FORCES. (lb) - Max. Comp./Max. Ten. - All forces 250 (lb) or less except when shown.
TOP CHORD 1-2=-849/63, 2-3=-857/64
BOT CHORD 1-5=0/652, 3-5=0/652
WEBS 2-5=0/481

NOTES-
1) Unbalanced roof live loads have been considered for this design.
2) Wind: ASCE 7-16; Vult=120mph (3-second gust) Vasd=95mph; TCDL=6.0psf; BCDL=6.0psf; h=25ft; B=45ft; L=24ft; eave=4ft; Cat. II; Exp B; Enclosed; MWFRS (directional) and C-C Exterior(2E) 0-1-12 to 3-1-12, Interior(1) 3-1-12 to 8-0-0, Exterior(2R) 8-0-0 to 11-0-0, Interior(1) 11-0-0 to 16-10-8 zone;C-C for members and forces & MWFRS for reactions shown; Lumber DOL=1.60 plate grip DOL=1.60
3) This truss has been designed for a 10.0 psf bottom chord live load nonconcurrent with any other live loads.
4) * This truss has been designed for a live load of 20.0psf on the bottom chord in all areas where a rectangle 3-6-0 tall by 2-0-0 wide will fit between the bottom chord and any other members, with BCDL = 10.0psf.
5) One H2.5A Simpson Strong-Tie connectors recommended to connect truss to bearing walls due to UPLIFT at jt(s) 3 and 1. This connection is for uplift only and does not consider lateral forces.
6) This truss is designed in accordance with the 2018 International Residential Code sections R502.11.1 and R802.10.2 and referenced standard ANSI/TPI 1.

October 27,2021

WARNING - Verify design parameters and READ NOTES ON THIS AND INCLUDED MITEK REFERENCE PAGE MII-7473 rev. 5/19/2020 BEFORE USE.
Design valid for use only with MiTek® connectors. This design is based only upon parameters shown, and is for an individual building component, not a truss system. Before use, the building designer must verify the applicability of design parameters and properly incorporate this design into the overall building design. Bracing indicated is to prevent buckling of individual truss web and/or chord members only. Additional temporary and permanent bracing is always required for stability and to prevent collapse with possible personal injury and property damage. For general guidance regarding the fabrication, storage, delivery, erection and bracing of trusses and truss systems, see **ANSI/TPI1 Quality Criteria, DSB-89 and BCSI Building Component Safety Information** available from Truss Plate Institute, 2670 Crain Highway, Suite 203 Waldorf, MD 20601

ENGINEERING BY TRENCO A MiTek Affiliate
818 Soundside Road
Edenton, NC 27932

Job	Truss	Truss Type	Qty	Ply	KB Home 149.2115.C Vol ceiling and tray
149_2115_C_VO_T	BE	Common Supported Gable	1	1	I48539497 Job Reference (optional)

84 Components (Dunn), Dunn, NC - 28334, 8.520 s Aug 27 2021 MiTek Industries, Inc. Wed Oct 27 08:07:14 2021 Page 1
ID:bNZHYySm82JAWDNgfw9uCLzLbIt-R00YuvLztEI3k3jrb6r_28hd6JQ4vCstE0QNnnyPGrx

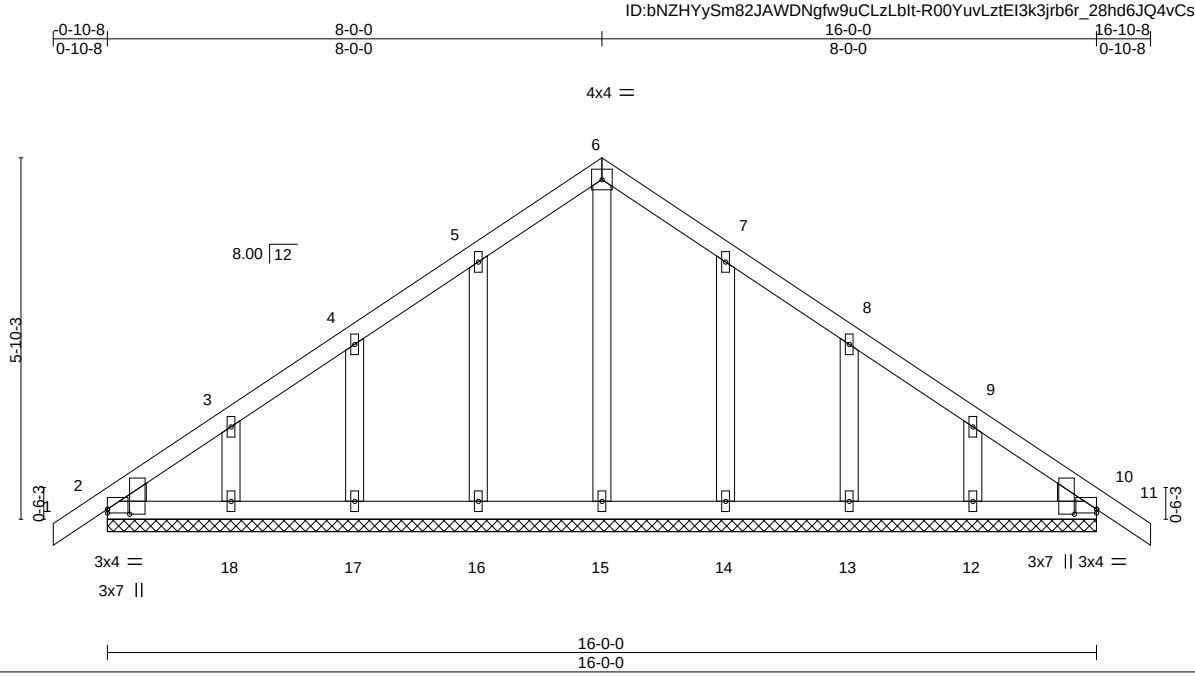

Plate Offsets (X,Y)-- [2:0-0-0,0-0-12], [2:0-0-15,0-4-5], [10:0-0-0,0-0-12], [10:0-0-15,0-4-5]

LOADING (psf)		SPACING- 2-0-0		CSI.		DEFL. in (loc) l/defl L/d				PLATES	GRIP
TCLL	20.0	Plate Grip DOL	1.15	TC	0.05	Vert(LL)	-0.00	10	n/r	120	MT20	197/144
TCDL	10.0	Lumber DOL	1.15	BC	0.03	Vert(CT)	-0.00	10	n/r	120		
BCLL	0.0 *	Rep Stress Incr	YES	WB	0.06	Horz(CT)	0.00	10	n/a	n/a		
BCDL	10.0	Code IRC2018/TPI2014		Matrix-S							Weight: 89 lb	FT = 20%

LUMBER-
TOP CHORD 2x4 SP No.2 or 2x4 SPF No.2
BOT CHORD 2x4 SP No.2 or 2x4 SPF No.2
OTHERS 2x4 SP No.3
WEDGE
Left: 2x4 SP No.3 , Right: 2x4 SP No.3

BRACING-
TOP CHORD Structural wood sheathing directly applied or 6-0-0 oc purlins.
BOT CHORD Rigid ceiling directly applied or 10-0-0 oc bracing.

REACTIONS. All bearings 16-0-0.
(lb) - Max Horz 2=-101(LC 10)
Max Uplift All uplift 100 lb or less at joint(s) 2, 10, 16, 17, 18, 14, 13, 12
Max Grav All reactions 250 lb or less at joint(s) 2, 10, 15, 16, 17, 18, 14, 13, 12

FORCES. (lb) - Max. Comp./Max. Ten. - All forces 250 (lb) or less except when shown.

NOTES-
1) Unbalanced roof live loads have been considered for this design.
2) Wind: ASCE 7-16; Vult=120mph (3-second gust) Vasd=95mph; TCDL=6.0psf; BCDL=6.0psf; h=25ft; B=45ft; L=24ft; eave=2ft; Cat. II; Exp B; Enclosed; MWFRS (directional) and C-C Corner(3E) -0-10-8 to 2-0-0, Exterior(2N) 2-0-0 to 8-0-0, Corner(3R) 8-0-0 to 11-0-0, Exterior(2N) 11-0-0 to 16-10-8 zone; cantilever left and right exposed ; end vertical left and right exposed;C-C for members and forces & MWFRS for reactions shown; Lumber DOL=1.60 plate grip DOL=1.60
3) Truss designed for wind loads in the plane of the truss only. For studs exposed to wind (normal to the face), see Standard Industry Gable End Details as applicable, or consult qualified building designer as per ANSI/TPI 1.
4) All plates are 1.5x4 MT20 unless otherwise indicated.
5) Gable requires continuous bottom chord bearing.
6) Gable studs spaced at 2-0-0 oc.
7) This truss has been designed for a 10.0 psf bottom chord live load nonconcurrent with any other live loads.
8) * This truss has been designed for a live load of 20.0psf on the bottom chord in all areas where a rectangle 3-6-0 tall by 2-0-0 wide will fit between the bottom chord and any other members.
9) N/A
10) This truss is designed in accordance with the 2018 International Residential Code sections R502.11.1 and R802.10.2 and referenced standard ANSI/TPI 1.

October 27,2021

WARNING - Verify design parameters and READ NOTES ON THIS AND INCLUDED MITEK REFERENCE PAGE MII-7473 rev. 5/19/2020 BEFORE USE.
Design valid for use only with MiTek® connectors. This design is based only upon parameters shown, and is for an individual building component, not a truss system. Before use, the building designer must verify the applicability of design parameters and properly incorporate this design into the overall building design. Bracing indicated is to prevent buckling of individual truss web and/or chord members only. Additional temporary and permanent bracing is always required for stability and to prevent collapse with possible personal injury and property damage. For general guidance regarding the fabrication, storage, delivery, erection and bracing of trusses and truss systems, see **ANSI/TPI1 Quality Criteria, DSB-89 and BCSI Building Component Safety Information** available from Truss Plate Institute, 2670 Crain Highway, Suite 203 Waldorf, MD 20601

ENGINEERING BY TRENCO A MiTek Affiliate
818 Soundside Road
Edenton, NC 27932

Job	Truss	Truss Type	Qty	Ply	KB Home 149.2115.C Vol ceiling and tray
149_2115_C_VO_T	BG	COMMON GIRDER	1	3	I48539498 Job Reference (optional)

84 Components (Dunn), Dunn, NC - 28334, 8.520 s Aug 27 2021 MiTek Industries, Inc. Wed Oct 27 08:07:15 2021 Page 1
ID:bNZHYySm82JAWDNgfw9uCLzLbIt-vCaw6FMceYQwLDI19pMDbLDijjgCeRf0TgAxJEyPGrw

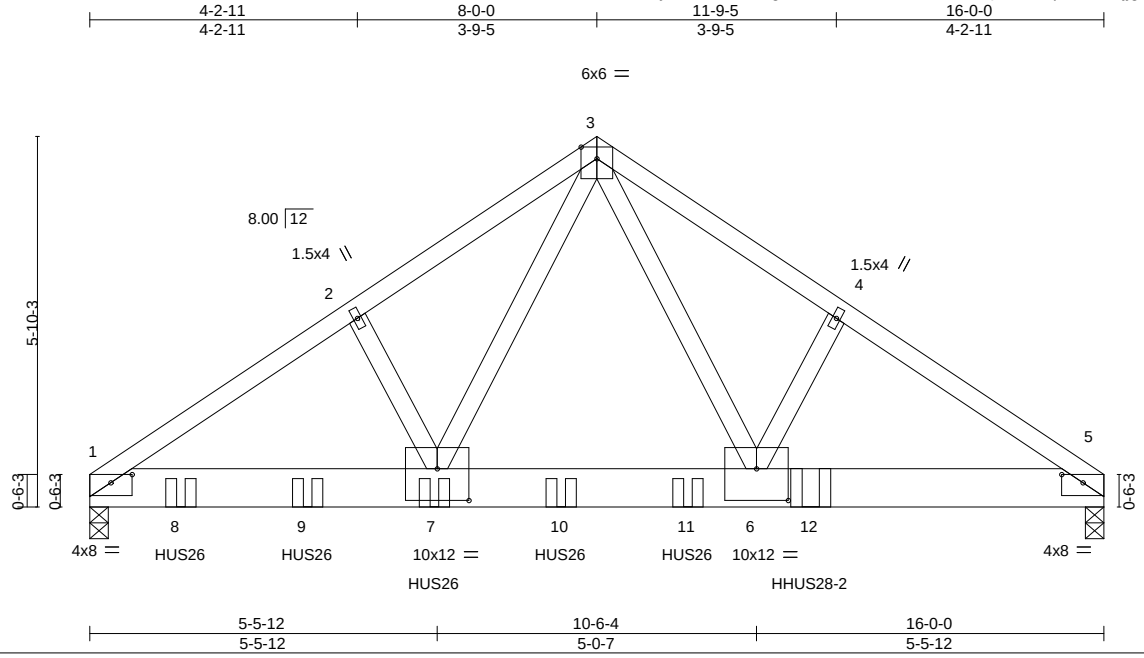

Plate Offsets (X,Y)-- [1:0-4-0,0-1-9], [5:0-4-0,0-1-9], [6:0-6-0,0-6-0], [7:0-6-0,0-6-0]

LOADING (psf)		SPACING- 2-0-0		CSI.		DEFL. in (loc) l/defl L/d				PLATES	GRIP
TCLL	20.0	Plate Grip DOL	1.15	TC	0.44	Vert(LL) -0.08 6-7 >999 240				MT20	197/144
TCDL	10.0	Lumber DOL	1.15	BC	0.42	Vert(CT) -0.15 6-7 >999 180					
BCLL	0.0 *	Rep Stress Incr	NO	WB	0.92	Horz(CT) 0.02 5 n/a n/a					
BCDL	10.0	Code IRC2018/TPI2014		Matrix-S						Weight: 309 lb	FT = 20%

LUMBER-
TOP CHORD 2x4 SP No.2 or 2x4 SPF No.2
BOT CHORD 2x8 SP DSS
WEBS 2x4 SP No.3

BRACING-
TOP CHORD Structural wood sheathing directly applied or 6-0-0 oc purlins.
BOT CHORD Rigid ceiling directly applied or 10-0-0 oc bracing.

REACTIONS. (size) 1=0-3-8 (req. 0-4-4), 5=0-3-8
Max Horz 1=91(LC 26)
Max Uplift 1=-265(LC 8), 5=-488(LC 8)
Max Grav 1=8138(LC 2), 5=6211(LC 1)

SUPPLEMENTARY BEARING PLATES, SPECIAL ANCHORAGE, OR OTHER MEANS TO ALLOW FOR THE MINIMUM REQUIRED SUPPORT WIDTH (SUCH AS COLUMN CAPS, BEARING BLOCKS, ETC.) ARE THE RESPONSIBILITY OF THE TRUSS MANUFACTURER OR THE BUILDING DESIGNER.

FORCES. (lb) - Max. Comp./Max. Ten. - All forces 250 (lb) or less except when shown.
TOP CHORD 1-2=-10337/435, 2-3=-10210/473, 3-4=-9921/780, 4-5=-10083/744
BOT CHORD 1-7=-313/8436, 6-7=-259/5796, 5-6=-566/8197
WEBS 3-6=-654/5725, 3-7=-50/6637

NOTES-
1) 3-ply truss to be connected together with 10d (0.131"x3") nails as follows:
Top chords connected as follows: 2x4 - 1 row at 0-9-0 oc.
Bottom chords connected as follows: 2x8 - 4 rows staggered at 0-5-0 oc.
Webs connected as follows: 2x4 - 1 row at 0-9-0 oc.
2) All loads are considered equally applied to all plies, except if noted as front (F) or back (B) face in the LOAD CASE(S) section. Ply to ply connections have been provided to distribute only loads noted as (F) or (B), unless otherwise indicated.
3) Unbalanced roof live loads have been considered for this design.
4) Wind: ASCE 7-16; Vult=120mph (3-second gust) Vasd=95mph; TCDL=6.0psf; BCDL=6.0psf; h=25ft; B=45ft; L=24ft; eave=4ft; Cat. II; Exp B; Enclosed; MWFRS (directional); Lumber DOL=1.60 plate grip DOL=1.60
5) This truss has been designed for a 10.0 psf bottom chord live load nonconcurrent with any other live loads.
6) * This truss has been designed for a live load of 20.0psf on the bottom chord in all areas where a rectangle 3-6-0 tall by 2-0-0 wide will fit between the bottom chord and any other members.
7) WARNING: Required bearing size at joint(s) 1 greater than input bearing size.
8) One H2.5A Simpson Strong-Tie connectors recommended to connect truss to bearing walls due to UPLIFT at jt(s) 1 and 5. This connection is for uplift only and does not consider lateral forces.
9) This truss is designed in accordance with the 2018 International Residential Code sections R502.11.1 and R802.10.2 and referenced standard ANSI/TPI 1.
10) Use Simpson Strong-Tie HUS26 (14-10d Girder, 6-10d Truss) or equivalent spaced at 2-0-0 oc max. starting at 1-5-4 from the left end to 7-5-4 to connect truss(es) to back face of bottom chord.
11) Use Simpson Strong-Tie HUS26 (14-10d Girder, 6-10d Truss, Single Ply Girder) or equivalent at 9-5-4 from the left end to connect truss(es) to back face of bottom chord.
12) Use Simpson Strong-Tie HHUS28-2 (22-16d Girder, 4-16d Truss) or equivalent at 11-4-8 from the left end to connect truss(es) to back face of bottom chord.
13) Fill all nail holes where hanger is in contact with lumber.

October 27,2021

LOAD CASE(S) Standard

Continued on page 2

WARNING - Verify design parameters and READ NOTES ON THIS AND INCLUDED MITEK REFERENCE PAGE MII-7473 rev. 5/19/2020 BEFORE USE.
Design valid for use only with MiTek® connectors. This design is based only upon parameters shown, and is for an individual building component, not a truss system. Before use, the building designer must verify the applicability of design parameters and properly incorporate this design into the overall building design. Bracing indicated is to prevent buckling of individual truss web and/or chord members only. Additional temporary and permanent bracing is always required for stability and to prevent collapse with possible personal injury and property damage. For general guidance regarding the fabrication, storage, delivery, erection and bracing of trusses and truss systems, see **ANSI/TPI1 Quality Criteria, DSB-89 and BCSI Building Component Safety Information** available from Truss Plate Institute, 2670 Crain Highway, Suite 203 Waldorf, MD 20601

ENGINEERING BY TRENCO A MiTek Affiliate
818 Soundside Road
Edenton, NC 27932

LOAD CASE(S) Standard

1) Dead + Roof Live (balanced): Lumber Increase=1.15, Plate Increase=1.15
   Uniform Loads (plf)
   Vert: 1-3=-60, 3-5=-60, 1-5=-20
   Concentrated Loads (lb)
   Vert: 7=-1938(B) 8=-1938(B) 9=-1938(B) 10=-1938(B) 11=-1938(B) 12=-3236(B)

WARNING - Verify design parameters and READ NOTES ON THIS AND INCLUDED MITEK REFERENCE PAGE MII-7473 rev. 5/19/2020 BEFORE USE.
Design valid for use only with MiTek® connectors. This design is based only upon parameters shown, and is for an individual building component, not a truss system. Before use, the building designer must verify the applicability of design parameters and properly incorporate this design into the overall building design. Bracing indicated is to prevent buckling of individual truss web and/or chord members only. Additional temporary and permanent bracing is always required for stability and to prevent collapse with possible personal injury and property damage. For general guidance regarding the fabrication, storage, delivery, erection and bracing of trusses and truss systems, see **ANSI/TPI1 Quality Criteria, DSB-89 and BCSI Building Component Safety Information** available from Truss Plate Institute, 2670 Crain Highway, Suite 203 Waldorf, MD 20601

ENGINEERING BY TRENCO A MiTek Affiliate
818 Soundside Road
Edenton, NC 27932

Job	Truss	Truss Type	Qty	Ply	KB Home 149.2115.C Vol ceiling and tray
149_2115_C_VO_T	H1	HIP	1	1	I48539499 Job Reference (optional)

84 Components (Dunn), Dunn, NC - 28334, 8.520 s Aug 27 2021 MiTek Industries, Inc. Wed Oct 27 08:07:17 2021 Page 1

ID:bNZHYySm82JAWDNgfw9uCLzLbIt-saihXwNsA9gebXSQHEOhgmJ_tWJV6LlJw_f2O6yPGru

-0-10-8	6-11-0	13-3-8	19-8-0	24-9-4	30-4-0	36-8-8	43-1-0	50-0-0
0-10-8	6-11-0	6-4-8	6-4-8	5-1-4	5-6-12	6-4-8	6-4-8	6-11-0

Scale = 1:87.8

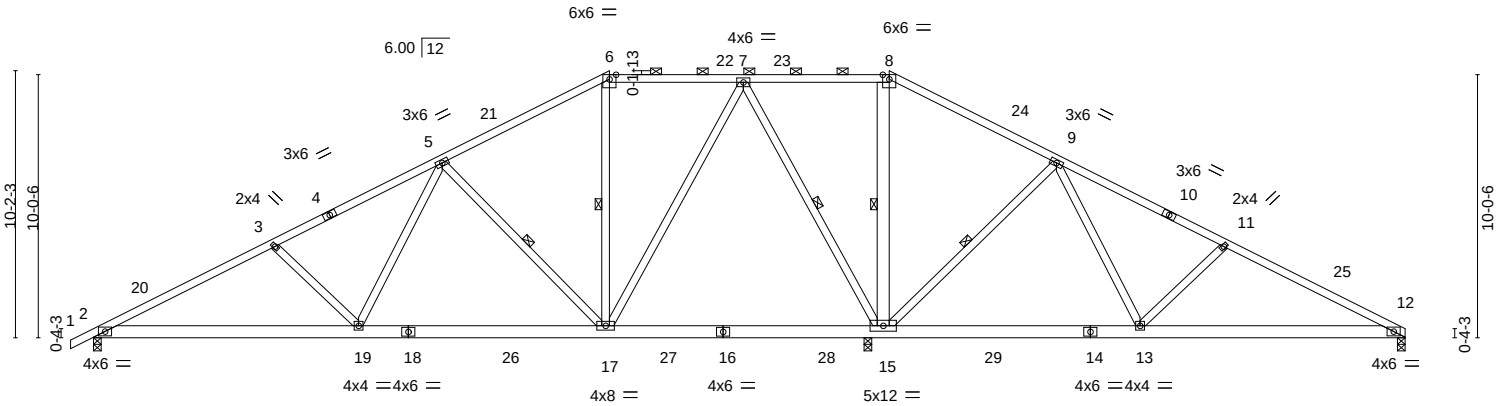

10-1-4	19-8-0	24-9-4	29-8-0	30-4-0	39-10-12	50-0-0
10-1-4	9-6-12	5-1-4	4-10-12	0-8-0	9-6-12	10-1-4

LOADING (psf)		**SPACING-** 2-0-0	**CSI.**		**DEFL.** in (loc) l/defl L/d	**PLATES**	**GRIP**
TCLL	20.0	Plate Grip DOL 1.15	TC	0.66	Vert(LL) -0.11 15-17 >999 240	MT20	197/144
TCDL	10.0	Lumber DOL 1.15	BC	0.63	Vert(CT) -0.22 2-19 >999 180		
BCLL	0.0 *	Rep Stress Incr YES	WB	0.94	Horz(CT) 0.02 15 n/a n/a		
BCDL	10.0	Code IRC2018/TPI2014	Matrix-S			Weight: 327 lb	FT = 20%

LUMBER-

TOP CHORD 2x4 SP No.2 or 2x4 SPF No.2
BOT CHORD 2x6 SP No.2
WEBS 2x4 SP No.3 *Except*
8-15: 2x6 SP No.2

BRACING-

TOP CHORD Structural wood sheathing directly applied or 3-10-0 oc purlins, except
2-0-0 oc purlins (6-0-0 max.): 6-8.
BOT CHORD Rigid ceiling directly applied or 6-0-0 oc bracing.
WEBS 1 Row at midpt 5-17, 6-17, 7-15, 8-15, 9-15

REACTIONS. (size) 2=0-3-8, 15=(0-3-8 + H10A Simpson Strong-Tie) (req. 0-4-13), 12=0-3-8
Max Horz 2=143(LC 11)
Max Uplift 2=-26(LC 12), 15=-35(LC 12)
Max Grav 2=1099(LC 17), 15=3071(LC 19), 12=460(LC 24)

FORCES. (lb) - Max. Comp./Max. Ten. - All forces 250 (lb) or less except when shown.
TOP CHORD 2-3=-1761/60, 3-5=-1513/60, 5-6=-586/103, 6-7=-458/117, 7-8=0/954, 8-9=0/1096, 9-11=-252/310, 11-12=-554/209
BOT CHORD 2-19=0/1586, 17-19=0/1015, 13-15=-434/99, 12-13=-155/425
WEBS 3-19=-380/114, 5-19=0/738, 5-17=-819/101, 7-17=0/1234, 7-15=-1566/84, 8-15=-744/59, 9-15=-846/99, 9-13=0/758, 11-13=-399/125

NOTES-

1) Unbalanced roof live loads have been considered for this design.
2) Wind: ASCE 7-16; Vult=120mph (3-second gust) Vasd=95mph; TCDL=6.0psf; BCDL=6.0psf; h=25ft; B=45ft; L=24ft; eave=6ft; Cat. II; Exp B; Enclosed; MWFRS (directional) and C-C Exterior(2E) -0-10-8 to 2-1-8, Interior(1) 2-1-8 to 19-8-0, Exterior(2R) 19-8-0 to 23-10-15, Interior(1) 23-10-15 to 30-4-0, Exterior(2R) 30-4-0 to 34-6-15, Interior(1) 34-6-15 to 49-10-4 zone;C-C for members and forces & MWFRS for reactions shown; Lumber DOL=1.60 plate grip DOL=1.60
3) Provide adequate drainage to prevent water ponding.
4) This truss has been designed for a 10.0 psf bottom chord live load nonconcurrent with any other live loads.
5) * This truss has been designed for a live load of 20.0psf on the bottom chord in all areas where a rectangle 3-6-0 tall by 2-0-0 wide will fit between the bottom chord and any other members, with BCDL = 10.0psf.
6) H10A Simpson Strong-Tie connectors recommended to connect truss to bearing walls due to UPLIFT at jt(s) 15. This connection is for uplift only and does not consider lateral forces.
7) One H2.5A Simpson Strong-Tie connectors recommended to connect truss to bearing walls due to UPLIFT at jt(s) 2. This connection is for uplift only and does not consider lateral forces.
8) This truss is designed in accordance with the 2018 International Residential Code sections R502.11.1 and R802.10.2 and referenced standard ANSI/TPI 1.
9) Graphical purlin representation does not depict the size or the orientation of the purlin along the top and/or bottom chord.

October 27,2021

WARNING - Verify design parameters and READ NOTES ON THIS AND INCLUDED MITEK REFERENCE PAGE MII-7473 rev. 5/19/2020 BEFORE USE.
Design valid for use only with MiTek® connectors. This design is based only upon parameters shown, and is for an individual building component, not a truss system. Before use, the building designer must verify the applicability of design parameters and properly incorporate this design into the overall building design. Bracing indicated is to prevent buckling of individual truss web and/or chord members only. Additional temporary and permanent bracing is always required for stability and to prevent collapse with possible personal injury and property damage. For general guidance regarding the fabrication, storage, delivery, erection and bracing of trusses and truss systems, see **ANSI/TPI1 Quality Criteria, DSB-89 and BCSI Building Component Safety Information** available from Truss Plate Institute, 2670 Crain Highway, Suite 203 Waldorf, MD 20601

ENGINEERING BY TRENCO A MiTek Affiliate
818 Soundside Road
Edenton, NC 27932

Job	Truss	Truss Type	Qty	Ply	KB Home 149.2115.C Vol ceiling and tray
149_2115_C_VO_T	H2	HIP	1	1	I48539500 Job Reference (optional)

84 Components (Dunn), Dunn, NC - 28334, 8.520 s Aug 27 2021 MiTek Industries, Inc. Wed Oct 27 08:07:20 2021 Page 1

ID:bNZHYySm82JAWDNgfw9uCLzLbIt-G9Np9yQkS42CS_A?yMyOIPxUokJoJholcxti?RyPGrr

-0-10-8	6-0-5	11-6-3	17-0-0	23-3-2	25-0-0	33-0-0	38-5-13	43-11-11	50-0-0
0-10-8	6-0-5	5-5-13	5-5-13	6-3-2	1-8-14	8-0-0	5-5-13	5-5-13	6-0-5

Scale = 1:88.3

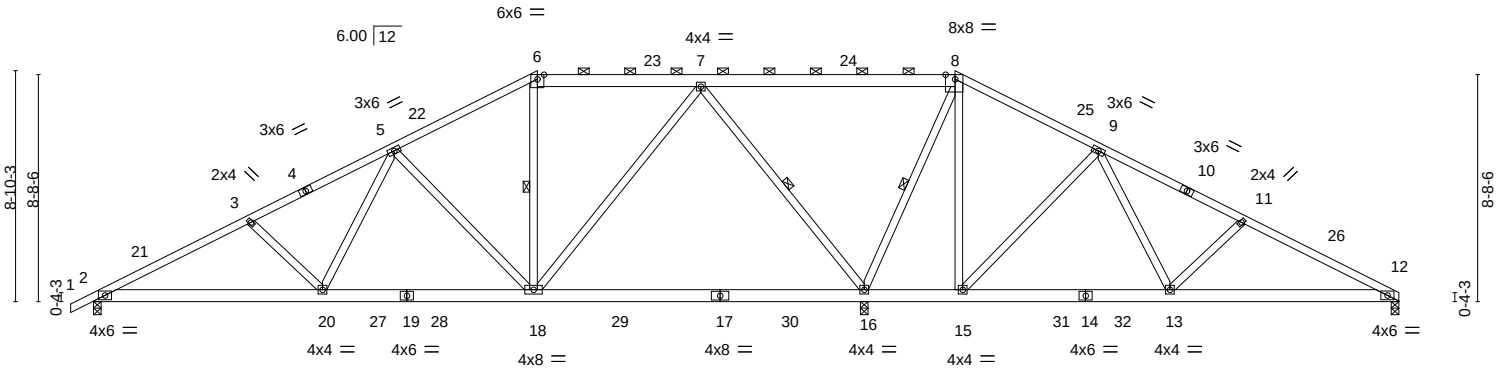

8-9-4	17-0-0	25-0-0	29-6-4	33-0-0	41-2-12	50-0-0
8-9-4	8-2-12	8-0-0	4-6-4	3-5-12	8-2-12	8-9-4

Plate Offsets (X,Y)-- [8:0-4-6,Edge]

LOADING (psf)		**SPACING-** 2-0-0	**CSI.**		**DEFL.** in (loc) l/defl L/d	**PLATES**	**GRIP**
TCLL	20.0	Plate Grip DOL 1.15	TC	0.68	Vert(LL) -0.25 16-18 >999 240	MT20	197/144
TCDL	10.0	Lumber DOL 1.15	BC	0.65	Vert(CT) -0.39 16-18 >902 180		
BCLL	0.0 *	Rep Stress Incr YES	WB	0.92	Horz(CT) 0.02 16 n/a n/a		
BCDL	10.0	Code IRC2018/TPI2014	Matrix-S			Weight: 330 lb	FT = 20%

LUMBER-

TOP CHORD 2x4 SP No.2 or 2x4 SPF No.2 *Except* 6-8: 2x6 SP No.2

BOT CHORD 2x6 SP No.2

WEBS 2x4 SP No.3

BRACING-

TOP CHORD Structural wood sheathing directly applied or 4-0-6 oc purlins, except 2-0-0 oc purlins (6-0-0 max.): 6-8.

BOT CHORD Rigid ceiling directly applied or 6-0-0 oc bracing.

WEBS 1 Row at midpt 6-18, 7-16, 8-16

REACTIONS. (size) 2=0-3-8, 16=(0-3-8 + H10A Simpson Strong-Tie) (req. 0-4-11), 12=0-3-8

Max Horz 2=124(LC 11)

Max Uplift 2=-31(LC 12), 16=-23(LC 12)

Max Grav 2=1075(LC 17), 16=3002(LC 19), 12=496(LC 24)

FORCES. (lb) - Max. Comp./Max. Ten. - All forces 250 (lb) or less except when shown.

TOP CHORD 2-3=-1756/67, 3-5=-1542/68, 5-6=-803/93, 6-7=-666/105, 7-8=0/1091, 8-9=0/731, 9-11=-439/152, 11-12=-701/65

BOT CHORD 2-20=-13/1581, 18-20=0/1117, 15-16=-588/118, 13-15=-259/101, 12-13=-30/566

WEBS 3-20=-326/98, 5-20=0/579, 5-18=-661/95, 7-18=0/1093, 7-16=-1702/122, 8-16=-1294/102, 8-15=-25/561, 9-15=-732/77, 9-13=0/690, 11-13=-348/111

NOTES-

1) Unbalanced roof live loads have been considered for this design.
2) Wind: ASCE 7-16; Vult=120mph (3-second gust) Vasd=95mph; TCDL=6.0psf; BCDL=6.0psf; h=25ft; B=45ft; L=24ft; eave=6ft; Cat. II; Exp B; Enclosed; MWFRS (directional) and C-C Exterior(2E) -0-10-8 to 2-1-8, Interior(1) 2-1-8 to 17-0-0, Exterior(2R) 17-0-0 to 21-2-15, Interior(1) 21-2-15 to 33-0-0, Exterior(2R) 33-0-0 to 37-2-15, Interior(1) 37-2-15 to 49-10-4 zone;C-C for members and forces & MWFRS for reactions shown; Lumber DOL=1.60 plate grip DOL=1.60
3) Provide adequate drainage to prevent water ponding.
4) This truss has been designed for a 10.0 psf bottom chord live load nonconcurrent with any other live loads.
5) * This truss has been designed for a live load of 20.0psf on the bottom chord in all areas where a rectangle 3-6-0 tall by 2-0-0 wide will fit between the bottom chord and any other members, with BCDL = 10.0psf.
6) H10A Simpson Strong-Tie connectors recommended to connect truss to bearing walls due to UPLIFT at jt(s) 16. This connection is for uplift only and does not consider lateral forces.
7) One H2.5A Simpson Strong-Tie connectors recommended to connect truss to bearing walls due to UPLIFT at jt(s) 2 and 12. This connection is for uplift only and does not consider lateral forces.
8) This truss is designed in accordance with the 2018 International Residential Code sections R502.11.1 and R802.10.2 and referenced standard ANSI/TPI 1.
9) Graphical purlin representation does not depict the size or the orientation of the purlin along the top and/or bottom chord.

October 27,2021

WARNING - Verify design parameters and READ NOTES ON THIS AND INCLUDED MITEK REFERENCE PAGE MII-7473 rev. 5/19/2020 BEFORE USE.
Design valid for use only with MiTek® connectors. This design is based only upon parameters shown, and is for an individual building component, not a truss system. Before use, the building designer must verify the applicability of design parameters and properly incorporate this design into the overall building design. Bracing indicated is to prevent buckling of individual truss web and/or chord members only. Additional temporary and permanent bracing is always required for stability and to prevent collapse with possible personal injury and property damage. For general guidance regarding the fabrication, storage, delivery, erection and bracing of trusses and truss systems, see **ANSI/TPI1 Quality Criteria, DSB-89 and BCSI Building Component Safety Information** available from Truss Plate Institute, 2670 Crain Highway, Suite 203 Waldorf, MD 20601

ENGINEERING BY TRENCO A MiTek Affiliate
818 Soundside Road
Edenton, NC 27932

Job	Truss	Truss Type	Qty	Ply	KB Home 149.2115.C Vol ceiling and tray
149_2115_C_VO_T	H3T	HIP	1	1	I48539501 Job Reference (optional)

84 Components (Dunn), Dunn, NC - 28334, 8.520 s Aug 27 2021 MiTek Industries, Inc. Wed Oct 27 08:07:21 2021 Page 1
ID:bNZHYySm82JAWDNgfw9uCLzLbIt-kMxBMIRMDOA338lBW4TdrcTb87h028LurbdFXtyPGrq

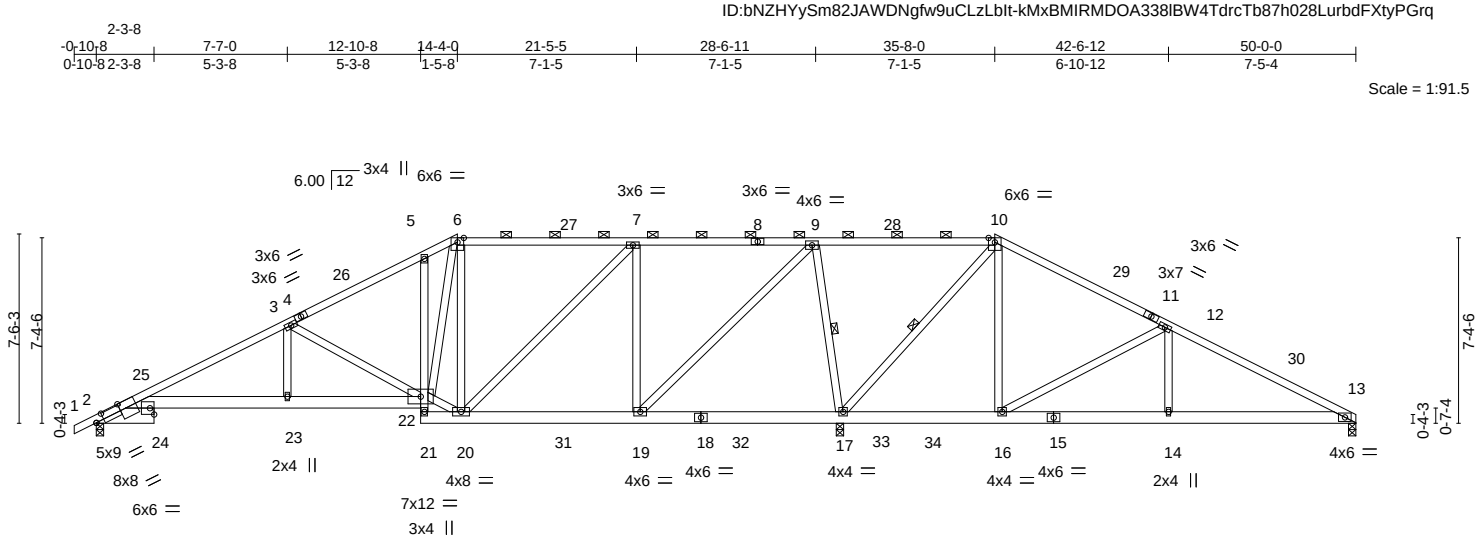

Plate Offsets (X,Y)-- [2:0-3-14,0-3-0], [2:1-0-14,Edge]

LOADING (psf)		SPACING-	2-0-0	CSI.		DEFL.	in	(loc)	l/defl	L/d	PLATES	GRIP
TCLL	20.0	Plate Grip DOL	1.15	TC	0.90	Vert(LL)	-0.12	2-23	>999	240	MT20	197/144
TCDL	10.0	Lumber DOL	1.15	BC	0.52	Vert(CT)	-0.21	2-23	>999	180		
BCLL	0.0 *	Rep Stress Incr	YES	WB	0.90	Horz(CT)	0.06	17	n/a	n/a		
BCDL	10.0	Code IRC2018/TPI2014		Matrix-S							Weight: 333 lb	FT = 20%

LUMBER-
TOP CHORD 2x4 SP No.2 or 2x4 SPF No.2
BOT CHORD 2x6 SP No.2 *Except*
2-24: 2x8 SP No.2, 2-22: 2x6 SP DSS, 5-21: 2x4 SP No.3
WEBS 2x4 SP No.3

BRACING-
TOP CHORD Structural wood sheathing directly applied or 3-5-2 oc purlins, except 2-0-0 oc purlins (5-8-7 max.): 6-10.
BOT CHORD Rigid ceiling directly applied or 6-0-0 oc bracing.
WEBS 1 Row at midpt 9-17, 10-17

REACTIONS. (size) 2=0-3-8, 13=0-3-8, 17=(0-3-8 + H10A Simpson Strong-Tie) (req. 0-4-12)
Max Horz 2=106(LC 11)
Max Uplift 2=-34(LC 12), 13=-4(LC 12), 17=-16(LC 12)
Max Grav 2=1040(LC 17), 13=488(LC 24), 17=3015(LC 19)

FORCES. (lb) - Max. Comp./Max. Ten. - All forces 250 (lb) or less except when shown.
TOP CHORD 2-3=-2006/52, 3-5=-1116/88, 5-6=-1018/125, 6-7=-771/106, 7-9=-260/97, 9-10=0/1322, 10-12=0/506, 12-13=-653/128
BOT CHORD 2-23=0/1793, 22-23=0/1793, 19-20=0/260, 17-19=-1064/101, 16-17=-417/93, 14-16=-82/507, 13-14=-82/507
WEBS 3-23=0/492, 3-22=-957/54, 20-22=0/607, 6-22=-50/783, 6-20=-551/42, 7-20=-20/793, 7-19=-960/110, 9-19=-20/1786, 9-17=-1642/114, 10-17=-1429/40, 10-16=0/601, 12-16=-821/76, 12-14=0/331

NOTES-
1) Unbalanced roof live loads have been considered for this design.
2) Wind: ASCE 7-16; Vult=120mph (3-second gust) Vasd=95mph; TCDL=6.0psf; BCDL=6.0psf; h=25ft; B=45ft; L=24ft; eave=6ft; Cat. II; Exp B; Enclosed; MWFRS (directional) and C-C Exterior(2E) -0-10-8 to 2-1-8, Interior(1) 2-1-8 to 14-4-0, Exterior(2R) 14-4-0 to 18-6-15, Interior(1) 18-6-15 to 35-8-0, Exterior(2R) 35-8-0 to 39-10-15, Interior(1) 39-10-15 to 49-10-4 zone; cantilever left and right exposed ; end vertical left and right exposed;C-C for members and forces & MWFRS for reactions shown; Lumber DOL=1.60 plate grip DOL=1.60
3) Provide adequate drainage to prevent water ponding.
4) This truss has been designed for a 10.0 psf bottom chord live load nonconcurrent with any other live loads.
5) * This truss has been designed for a live load of 20.0psf on the bottom chord in all areas where a rectangle 3-6-0 tall by 2-0-0 wide will fit between the bottom chord and any other members, with BCDL = 10.0psf.
6) H10A Simpson Strong-Tie connectors recommended to connect truss to bearing walls due to UPLIFT at jt(s) 17. This connection is for uplift only and does not consider lateral forces.
7) One H2.5A Simpson Strong-Tie connectors recommended to connect truss to bearing walls due to UPLIFT at jt(s) 2 and 13. This connection is for uplift only and does not consider lateral forces.
8) This truss is designed in accordance with the 2018 International Residential Code sections R502.11.1 and R802.10.2 and referenced standard ANSI/TPI 1.
9) Graphical purlin representation does not depict the size or the orientation of the purlin along the top and/or bottom chord.

October 27,2021

WARNING - Verify design parameters and READ NOTES ON THIS AND INCLUDED MITEK REFERENCE PAGE MII-7473 rev. 5/19/2020 BEFORE USE.
Design valid for use only with MiTek® connectors. This design is based only upon parameters shown, and is for an individual building component, not a truss system. Before use, the building designer must verify the applicability of design parameters and properly incorporate this design into the overall building design. Bracing indicated is to prevent buckling of individual truss web and/or chord members only. Additional temporary and permanent bracing is always required for stability and to prevent collapse with possible personal injury and property damage. For general guidance regarding the fabrication, storage, delivery, erection and bracing of trusses and truss systems, see **ANSI/TPI1 Quality Criteria, DSB-89 and BCSI Building Component Safety Information** available from Truss Plate Institute, 2670 Crain Highway, Suite 203 Waldorf, MD 20601

ENGINEERING BY TRENCO A MiTek Affiliate
818 Soundside Road
Edenton, NC 27932

Job	Truss	Truss Type	Qty	Ply	KB Home 149.2115.C Vol ceiling and tray
149_2115_C_VO_T	H4T	HIP	1	1	I48539502 Job Reference (optional)

84 Components (Dunn), Dunn, NC - 28334, 8.520 s Aug 27 2021 MiTek Industries, Inc. Wed Oct 27 08:07:23 2021 Page 1
ID:bNZHYySm82JAWDNgfw9uCLzLbIt-gk3yn_Sdl?QnJSvadVV5w1ZyHxNIW28BIv6MbmyPGro

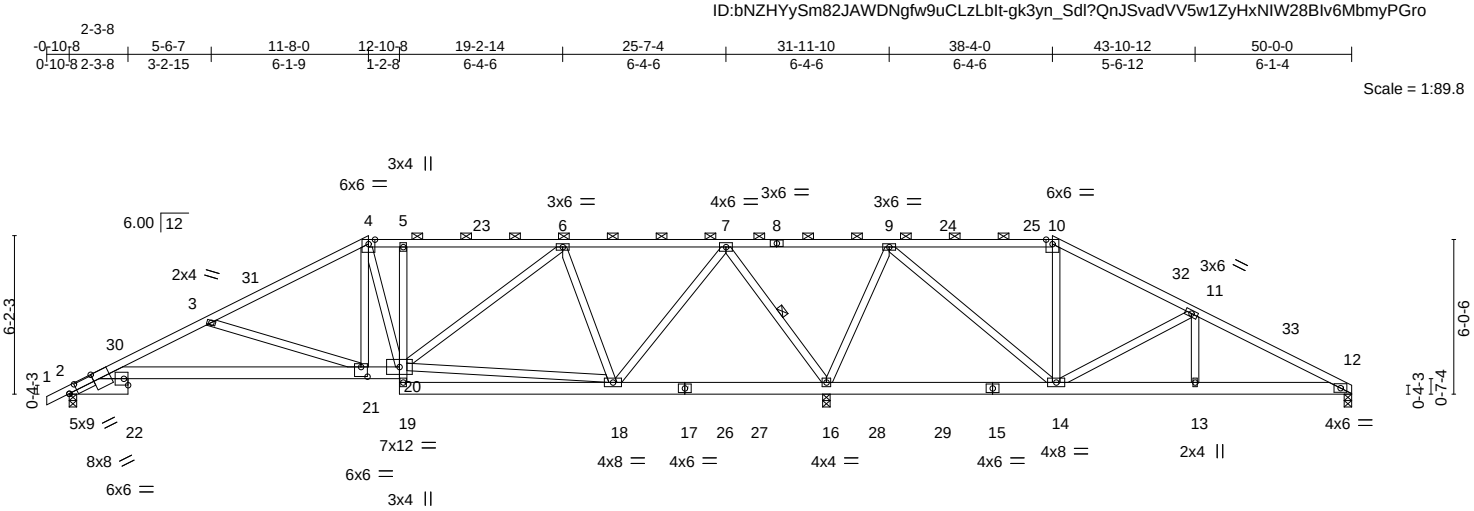

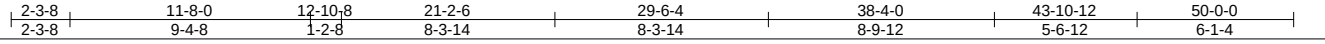

Plate Offsets (X,Y)-- [2:0-3-14,0-3-0], [2:1-0-14,Edge], [21:0-3-0,0-4-8]

LOADING (psf)		SPACING-	2-0-0	CSI.		DEFL.	in	(loc)	l/defl	L/d	PLATES	GRIP
TCLL	20.0	Plate Grip DOL	1.15	TC	0.86	Vert(LL)	-0.20	2-21	>999	240	MT20	197/144
TCDL	10.0	Lumber DOL	1.15	BC	0.54	Vert(CT)	-0.40	2-21	>871	180		
BCLL	0.0 *	Rep Stress Incr	YES	WB	0.95	Horz(CT)	0.08	16	n/a	n/a		
BCDL	10.0	Code IRC2018/TPI2014		Matrix-S							Weight: 326 lb	FT = 20%

LUMBER-
TOP CHORD 2x4 SP No.2 or 2x4 SPF No.2
BOT CHORD 2x6 SP No.2 *Except*
2-22: 2x8 SP No.2, 2-20: 2x6 SP DSS, 5-19: 2x4 SP No.3
WEBS 2x4 SP No.3

BRACING-
TOP CHORD Structural wood sheathing directly applied or 3-8-11 oc purlins, except
2-0-0 oc purlins (5-4-14 max.): 4-10.
BOT CHORD Rigid ceiling directly applied or 6-0-0 oc bracing.
WEBS 1 Row at midpt 7-16

REACTIONS. (size) 2=0-3-8, 12=0-3-8, 16=(0-3-8 + H10A Simpson Strong-Tie) (req. 0-4-10)
Max Horz 2=87(LC 11)
Max Uplift 2=-38(LC 12), 12=-10(LC 12), 16=-7(LC 12)
Max Grav 2=1023(LC 17), 12=463(LC 24), 16=2967(LC 19)

FORCES. (lb) - Max. Comp./Max. Ten. - All forces 250 (lb) or less except when shown.
TOP CHORD 4-5=-1041/104, 5-6=-1039/105, 7-9=0/1634, 2-3=-1864/140, 3-4=-1404/61, 10-11=-130/287, 11-12=-664/59
BOT CHORD 2-21=-98/1709, 20-21=0/1203, 5-20=-329/65, 18-19=0/288, 16-18=-648/59, 14-16=-1085/58, 13-14=-4/530, 12-13=-4/530
WEBS 3-21=-528/160, 4-21=0/991, 4-20=-547/0, 18-20=-10/266, 6-20=-1/743, 6-18=-853/88, 7-18=0/1367, 7-16=-1702/67, 9-16=-1316/97, 9-14=0/1311, 10-14=-358/52, 11-14=-617/76

NOTES-
1) Unbalanced roof live loads have been considered for this design.
2) Wind: ASCE 7-16; Vult=120mph (3-second gust) Vasd=95mph; TCDL=6.0psf; BCDL=6.0psf; h=25ft; B=45ft; L=24ft; eave=6ft; Cat. II; Exp B; Enclosed; MWFRS (directional) and C-C Exterior(2E) -0-10-8 to 2-1-8, Interior(1) 2-1-8 to 11-8-0, Exterior(2R) 11-8-0 to 15-10-15, Interior(1) 15-10-15 to 38-4-0, Exterior(2R) 38-4-0 to 42-6-15, Interior(1) 42-6-15 to 49-10-4 zone; cantilever left and right exposed ; end vertical left and right exposed;C-C for members and forces & MWFRS for reactions shown; Lumber DOL=1.60 plate grip DOL=1.60
3) Provide adequate drainage to prevent water ponding.
4) This truss has been designed for a 10.0 psf bottom chord live load nonconcurrent with any other live loads.
5) * This truss has been designed for a live load of 20.0psf on the bottom chord in all areas where a rectangle 3-6-0 tall by 2-0-0 wide will fit between the bottom chord and any other members, with BCDL = 10.0psf.
6) H10A Simpson Strong-Tie connectors recommended to connect truss to bearing walls due to UPLIFT at jt(s) 16. This connection is for uplift only and does not consider lateral forces.
7) One H2.5A Simpson Strong-Tie connectors recommended to connect truss to bearing walls due to UPLIFT at jt(s) 2 and 12. This connection is for uplift only and does not consider lateral forces.
8) This truss is designed in accordance with the 2018 International Residential Code sections R502.11.1 and R802.10.2 and referenced standard ANSI/TPI 1.
9) Graphical purlin representation does not depict the size or the orientation of the purlin along the top and/or bottom chord.

October 27,2021

WARNING - Verify design parameters and READ NOTES ON THIS AND INCLUDED MITEK REFERENCE PAGE MII-7473 rev. 5/19/2020 BEFORE USE.
Design valid for use only with MiTek® connectors. This design is based only upon parameters shown, and is for an individual building component, not a truss system. Before use, the building designer must verify the applicability of design parameters and properly incorporate this design into the overall building design. Bracing indicated is to prevent buckling of individual truss web and/or chord members only. Additional temporary and permanent bracing is always required for stability and to prevent collapse with possible personal injury and property damage. For general guidance regarding the fabrication, storage, delivery, erection and bracing of trusses and truss systems, see **ANSI/TPI1 Quality Criteria, DSB-89 and BCSI Building Component Safety Information** available from Truss Plate Institute, 2670 Crain Highway, Suite 203 Waldorf, MD 20601

ENGINEERING BY TRENCO A MiTek Affiliate
818 Soundside Road
Edenton, NC 27932

Job	Truss	Truss Type	Qty	Ply	KB Home 149.2115.C Vol ceiling and tray
149_2115_C_VO_T	H5T	HIP	1	1	I48539503 Job Reference (optional)

84 Components (Dunn), Dunn, NC - 28334, 8.520 s Aug 27 2021 MiTek Industries, Inc. Wed Oct 27 08:07:24 2021 Page 1
ID:bNZHYySm82JAWDNgfw9uCLzLbIt-9xdK?KTFWJYewcUmBC0KSF5CTLjwFWhLXZrv8CyPGrn

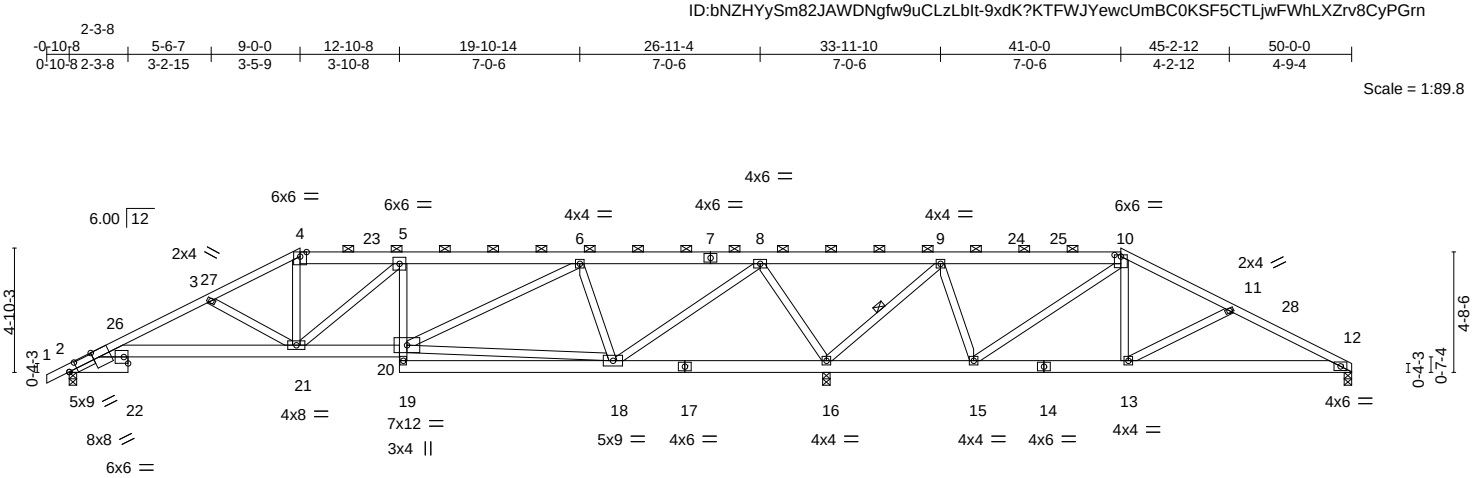

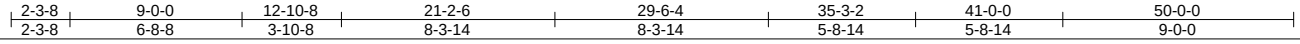

Plate Offsets (X,Y)-- [2:0-3-14,0-3-0], [2:1-0-14,Edge], [10:0-3-0,0-0-12]

LOADING (psf)		**SPACING-** 2-0-0	**CSI.**		**DEFL.**	in	(loc)	l/defl	L/d	**PLATES**	**GRIP**
TCLL	20.0	Plate Grip DOL 1.15	TC	0.57	Vert(LL)	-0.10	2-21	>999	240	MT20	197/144
TCDL	10.0	Lumber DOL 1.15	BC	0.58	Vert(CT)	-0.23	2-21	>999	180		
BCLL	0.0 *	Rep Stress Incr YES	WB	0.86	Horz(CT)	0.06	12	n/a	n/a		
BCDL	10.0	Code IRC2018/TPI2014	Matrix-S							Weight: 335 lb	FT = 20%

LUMBER-
TOP CHORD 2x6 SP No.2 *Except*
1-4,10-12: 2x4 SP No.2 or 2x4 SPF No.2
BOT CHORD 2x6 SP No.2 *Except*
2-22: 2x8 SP No.2, 2-20: 2x6 SP DSS, 5-19: 2x4 SP No.3
WEBS 2x4 SP No.3

BRACING-
TOP CHORD Structural wood sheathing directly applied or 3-7-14 oc purlins, except
2-0-0 oc purlins (5-9-2 max.): 4-10.
BOT CHORD Rigid ceiling directly applied or 10-0-0 oc bracing, Except:
6-0-0 oc bracing: 16-18,15-16.
WEBS 1 Row at midpt 9-16

REACTIONS. (size) 2=0-3-8, 12=0-3-8, 16=(0-3-8 + H10A Simpson Strong-Tie) (req. 0-4-1)
Max Horz 2=68(LC 11)
Max Uplift 2=-34(LC 12), 12=-5(LC 12), 16=-16(LC 12)
Max Grav 2=995(LC 23), 12=482(LC 24), 16=2610(LC 1)

FORCES. (lb) - Max. Comp./Max. Ten. - All forces 250 (lb) or less except when shown.
TOP CHORD 4-5=-1454/65, 5-6=-1512/89, 6-8=-464/43, 8-9=0/1742, 9-10=0/505, 2-3=-1979/97, 3-4=-1681/56, 10-11=-408/49, 11-12=-702/90
BOT CHORD 2-21=-54/1719, 20-21=0/1515, 5-20=-333/59, 18-19=0/321, 16-18=-894/58, 15-16=-653/48, 13-15=0/302, 12-13=-43/593
WEBS 4-21=0/552, 18-20=-3/412, 6-20=-16/896, 6-18=-881/102, 8-18=0/1618, 8-16=-1628/86, 9-16=-1519/79, 9-15=0/621, 10-15=-865/11, 10-13=0/408, 11-13=-320/111, 3-21=-288/107

NOTES-
1) Unbalanced roof live loads have been considered for this design.
2) Wind: ASCE 7-16; Vult=120mph (3-second gust) Vasd=95mph; TCDL=6.0psf; BCDL=6.0psf; h=25ft; B=45ft; L=24ft; eave=6ft; Cat. II; Exp B; Enclosed; MWFRS (directional) and C-C Exterior(2E) -0-10-8 to 2-1-8, Interior(1) 2-1-8 to 9-0-0, Exterior(2R) 9-0-0 to 13-0-4, Interior(1) 13-0-4 to 41-0-0, Exterior(2R) 41-0-0 to 45-4-11, Interior(1) 45-4-11 to 49-10-4 zone; cantilever left and right exposed ; end vertical left and right exposed;C-C for members and forces & MWFRS for reactions shown; Lumber DOL=1.60 plate grip DOL=1.60
3) Provide adequate drainage to prevent water ponding.
4) This truss has been designed for a 10.0 psf bottom chord live load nonconcurrent with any other live loads.
5) * This truss has been designed for a live load of 20.0psf on the bottom chord in all areas where a rectangle 3-6-0 tall by 2-0-0 wide will fit between the bottom chord and any other members.
6) H10A Simpson Strong-Tie connectors recommended to connect truss to bearing walls due to UPLIFT at jt(s) 16. This connection is for uplift only and does not consider lateral forces.
7) One H2.5A Simpson Strong-Tie connectors recommended to connect truss to bearing walls due to UPLIFT at jt(s) 2 and 12. This connection is for uplift only and does not consider lateral forces.
8) This truss is designed in accordance with the 2018 International Residential Code sections R502.11.1 and R802.10.2 and referenced standard ANSI/TPI 1.
9) Graphical purlin representation does not depict the size or the orientation of the purlin along the top and/or bottom chord.

October 27,2021

WARNING - Verify design parameters and READ NOTES ON THIS AND INCLUDED MITEK REFERENCE PAGE MII-7473 rev. 5/19/2020 BEFORE USE.
Design valid for use only with MiTek® connectors. This design is based only upon parameters shown, and is for an individual building component, not a truss system. Before use, the building designer must verify the applicability of design parameters and properly incorporate this design into the overall building design. Bracing indicated is to prevent buckling of individual truss web and/or chord members only. Additional temporary and permanent bracing is always required for stability and to prevent collapse with possible personal injury and property damage. For general guidance regarding the fabrication, storage, delivery, erection and bracing of trusses and truss systems, see **ANSI/TPI1 Quality Criteria, DSB-89 and BCSI Building Component Safety Information** available from Truss Plate Institute, 2670 Crain Highway, Suite 203 Waldorf, MD 20601

ENGINEERING BY TRENCO A MiTek Affiliate
818 Soundside Road
Edenton, NC 27932

Job	Truss	Truss Type	Qty	Ply	KB Home 149.2115.C Vol ceiling and tray
149_2115_C_VO_T	H6V	Hip	1	1	I48539504 Job Reference (optional)

84 Components (Dunn), Dunn, NC - 28334, 8.520 s Aug 27 2021 MiTek Industries, Inc. Wed Oct 27 08:07:26 2021 Page 1
ID:bNZHYySm82JAWDNgfw9uCLzLbIt-5Jl4P?UV2woMAve8Id2oYgBRd8IDjQce?tK0C5yPGrI

-0-10-8	5-6-7	8-0-0	13-10-0	19-8-0	25-6-0	30-4-0	39-0-0	42-8-5	49-2-0
0-10-8	5-6-7	2-5-9	5-10-0	5-10-0	5-10-0	4-10-0	8-8-0	3-8-5	6-5-11

Scale = 1:88.2

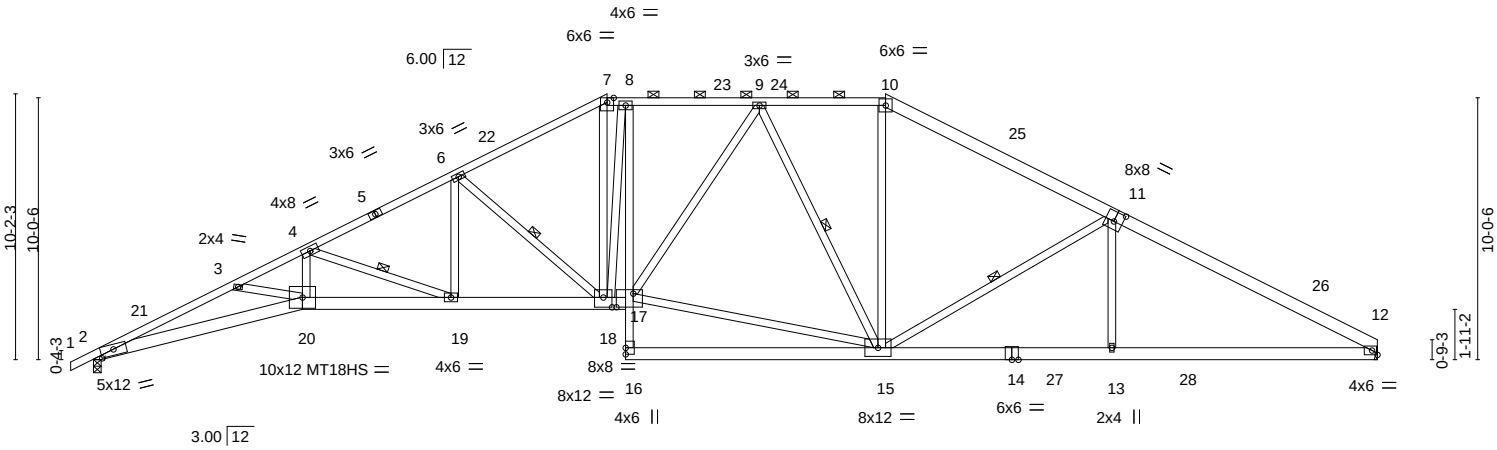

8-0-0	13-10-0	19-8-0	20-4-8	30-4-0	39-0-0	39-7-4	42-8-5	49-2-0
8-0-0	5-10-0	5-10-0	0-8-8	9-11-8	8-8-0	0-7-4	3-1-1	6-5-11

Plate Offsets (X,Y)-- [2:0-6-0,0-2-12], [11:0-4-0,0-4-8], [17:0-7-12,0-6-4], [18:0-4-0,0-4-8]

LOADING (psf)		SPACING-	2-0-0	CSI.		DEFL.	in	(loc)	l/defl	L/d	PLATES	GRIP
TCLL	20.0	Plate Grip DOL	1.15	TC	0.98	Vert(LL)	-0.51	19-20	>999	240	MT20	197/144
TCDL	10.0	Lumber DOL	1.15	BC	0.97	Vert(CT)	-0.96	19-20	>612	180	MT18HS	244/190
BCLL	0.0 *	Rep Stress Incr	YES	WB	0.84	Horz(CT)	0.48	12	n/a	n/a		
BCDL	10.0	Code IRC2018/TPI2014		Matrix-S							Weight: 362 lb	FT = 20%

LUMBER-

TOP CHORD 2x4 SP No.2 or 2x4 SPF No.2 *Except*
10-11,11-12: 2x6 SP No.2, 1-5: 2x4 SP No.1

BOT CHORD 2x6 SP No.2 *Except*
2-20,17-20: 2x6 SP DSS, 8-16: 2x4 SP No.2 or 2x4 SPF No.2

WEBS 2x4 SP No.3 *Except*
15-17: 2x4 SP No.2 or 2x4 SPF No.2

BRACING-

TOP CHORD Structural wood sheathing directly applied, except
2-0-0 oc purlins (2-9-3 max.): 7-10.

BOT CHORD Rigid ceiling directly applied or 10-0-0 oc bracing, Except:
2-2-0 oc bracing: 12-13.

WEBS 1 Row at midpt 4-19, 6-18, 9-15, 11-15

REACTIONS. (size) 2=0-3-8, 12=Mechanical
Max Horz 2=143(LC 11)
Max Uplift 2=-40(LC 12), 12=-14(LC 12)
Max Grav 2=2187(LC 17), 12=2176(LC 18)

FORCES. (lb) - Max. Comp./Max. Ten. - All forces 250 (lb) or less except when shown.

TOP CHORD 2-3=-7959/176, 3-4=-7764/123, 4-6=-4859/133, 6-7=-3701/157, 7-8=-3238/165, 8-9=-3339/167, 9-10=-2597/172, 10-11=-2998/161, 11-12=-3922/116

BOT CHORD 2-20=-128/7359, 19-20=-28/6887, 18-19=0/4376, 17-18=0/3347, 8-17=0/522, 13-15=-11/3405, 12-13=-15/3390

WEBS 4-20=0/2001, 4-19=-2677/55, 6-19=0/1120, 6-18=-1386/75, 7-18=-33/1490, 8-18=-734/44, 15-17=0/2867, 9-17=0/691, 9-15=-966/46, 10-15=0/997, 11-15=-1015/100, 11-13=0/504

NOTES-

1) Unbalanced roof live loads have been considered for this design.
2) Wind: ASCE 7-16; Vult=120mph (3-second gust) Vasd=95mph; TCDL=6.0psf; BCDL=6.0psf; h=25ft; B=45ft; L=24ft; eave=6ft; Cat. II; Exp B; Enclosed; MWFRS (directional) and C-C Exterior(2E) -0-10-8 to 2-1-8, Interior(1) 2-1-8 to 19-8-0, Exterior(2R) 19-8-0 to 23-10-15, Interior(1) 23-10-15 to 30-4-0, Exterior(2R) 30-4-0 to 34-6-15, Interior(1) 34-6-15 to 49-1-4 zone;C-C for members and forces & MWFRS for reactions shown; Lumber DOL=1.60 plate grip DOL=1.60
3) Provide adequate drainage to prevent water ponding.
4) All plates are MT20 plates unless otherwise indicated.
5) This truss has been designed for a 10.0 psf bottom chord live load nonconcurrent with any other live loads.
6) * This truss has been designed for a live load of 20.0psf on the bottom chord in all areas where a rectangle 3-6-0 tall by 2-0-0 wide will fit between the bottom chord and any other members, with BCDL = 10.0psf.
7) Refer to girder(s) for truss to truss connections.
8) Bearing at joint(s) 2 considers parallel to grain value using ANSI/TPI 1 angle to grain formula. Building designer should verify capacity of bearing surface.
9) Provide mechanical connection (by others) of truss to bearing plate capable of withstanding 100 lb uplift at joint(s) 12.
10) One H2.5A Simpson Strong-Tie connectors recommended to connect truss to bearing walls due to UPLIFT at jt(s) 2. This connection is for uplift only and does not consider lateral forces.
11) This truss is designed in accordance with the 2018 International Residential Code sections R502.11.1 and R802.10.2 and referenced standard ANSI/TPI 1.
12) Graphical purlin representation does not depict the size or the orientation of the purlin along the top and/or bottom chord.

October 27,2021

WARNING - Verify design parameters and READ NOTES ON THIS AND INCLUDED MITEK REFERENCE PAGE MII-7473 rev. 5/19/2020 BEFORE USE.
Design valid for use only with MiTek® connectors. This design is based only upon parameters shown, and is for an individual building component, not a truss system. Before use, the building designer must verify the applicability of design parameters and properly incorporate this design into the overall building design. Bracing indicated is to prevent buckling of individual truss web and/or chord members only. Additional temporary and permanent bracing is always required for stability and to prevent collapse with possible personal injury and property damage. For general guidance regarding the fabrication, storage, delivery, erection and bracing of trusses and truss systems, see **ANSI/TPI1 Quality Criteria, DSB-89 and BCSI Building Component Safety Information** available from Truss Plate Institute, 2670 Crain Highway, Suite 203 Waldorf, MD 20601

ENGINEERING BY TRENCO A MiTek Affiliate
818 Soundside Road
Edenton, NC 27932

Job	Truss	Truss Type	Qty	Ply	KB Home 149.2115.C Vol ceiling and tray
149_2115_C_VO_T	H7V	Hip	1	1	I48539505 Job Reference (optional)

84 Components (Dunn), Dunn, NC - 28334, 8.520 s Aug 27 2021 MiTek Industries, Inc. Wed Oct 27 08:07:28 2021 Page 1

ID:bNZHYySm82JAWDNgfw9uCLzLbIt-1isrqhWlaY24PDnXQ25Gd4Gn9y0NBJswSBp7HzyPGrj

-0-10-8	5-6-7	8-0-0	12-6-0	17-0-0	20-4-8	26-10-0	33-0-0	40-0-0	43-7-0	49-2-0
0-10-8	5-6-7	2-5-9	4-6-0	4-6-0	3-4-8	6-5-8	6-2-0	7-0-0	3-7-0	5-7-0

Scale = 1:88.7

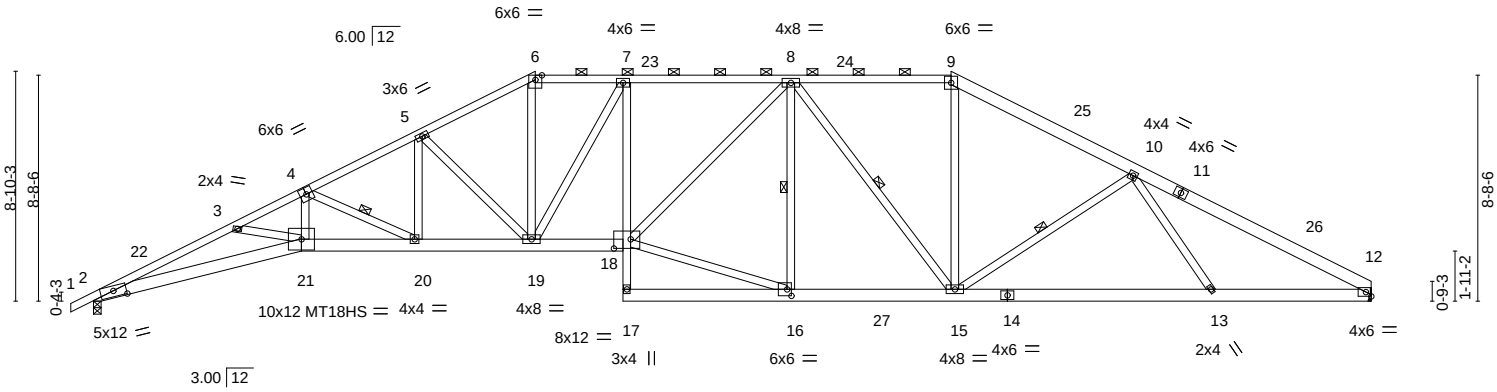

8-0-0	12-6-0	17-0-0	20-4-8	26-10-0	33-0-0	43-0-0	49-2-0
8-0-0	4-6-0	4-6-0	3-4-8	6-5-8	6-2-0	10-0-0	6-2-0

Plate Offsets (X,Y)-- [2:0-6-0,0-2-12], [16:0-2-0,0-3-0], [18:0-7-12,0-4-4]

LOADING (psf)		SPACING- 2-0-0		CSI.		DEFL.	in	(loc)	l/defl	L/d	PLATES	GRIP
TCLL	20.0	Plate Grip DOL	1.15	TC	0.97	Vert(LL)	-0.52	20	>999	240	MT20	197/144
TCDL	10.0	Lumber DOL	1.15	BC	0.80	Vert(CT)	-0.97	19-20	>606	180	MT18HS	244/190
BCLL	0.0 *	Rep Stress Incr	YES	WB	0.92	Horz(CT)	0.47	12	n/a	n/a		
BCDL	10.0	Code IRC2018/TPI2014		Matrix-S							Weight: 351 lb	FT = 20%

LUMBER-

TOP CHORD 2x4 SP No.2 or 2x4 SPF No.2 *Except*
9-11,11-12: 2x6 SP No.2, 1-4: 2x4 SP No.1

BOT CHORD 2x6 SP No.2 *Except*
2-21,18-21: 2x6 SP DSS, 7-17: 2x4 SP No.3

WEBS 2x4 SP No.3 *Except*
16-18: 2x4 SP No.2 or 2x4 SPF No.2

BRACING-

TOP CHORD Structural wood sheathing directly applied, except 2-0-0 oc purlins (2-4-4 max.): 6-9.

BOT CHORD Rigid ceiling directly applied or 10-0-0 oc bracing.

WEBS 1 Row at midpt 4-20, 8-16, 8-15, 10-15

REACTIONS. (size) 2=0-3-8, 12=Mechanical
Max Horz 2=124(LC 11)
Max Uplift 2=-40(LC 12), 12=-14(LC 12)
Max Grav 2=2195(LC 17), 12=2147(LC 18)

FORCES. (lb) - Max. Comp./Max. Ten. - All forces 250 (lb) or less except when shown.

TOP CHORD 2-3=-7976/184, 3-4=-7764/125, 4-5=-5232/136, 5-6=-4171/149, 6-7=-3673/153, 7-8=-4033/159, 8-9=-2805/157, 9-10=-3232/152, 10-12=-4044/69

BOT CHORD 2-21=-136/7361, 20-21=-27/6891, 19-20=0/4718, 18-19=0/4086, 7-18=0/426, 15-16=0/3173, 13-15=-41/3262, 12-13=0/3468

WEBS 4-21=0/1978, 4-20=-2408/40, 5-19=-1344/72, 6-19=-10/1677, 7-19=-849/30, 16-18=0/3202, 8-18=0/1285, 8-16=-794/60, 8-15=-688/28, 9-15=0/1110, 10-15=-583/122, 10-13=0/423, 5-20=0/1198

NOTES-

1) Unbalanced roof live loads have been considered for this design.
2) Wind: ASCE 7-16; Vult=120mph (3-second gust) Vasd=95mph; TCDL=6.0psf; BCDL=6.0psf; h=25ft; B=45ft; L=24ft; eave=6ft; Cat. II; Exp B; Enclosed; MWFRS (directional) and C-C Exterior(2E) -0-10-8 to 2-1-8, Interior(1) 2-1-8 to 17-0-0, Exterior(2R) 17-0-0 to 21-2-15, Interior(1) 21-2-15 to 33-0-0, Exterior(2R) 33-0-0 to 37-2-15, Interior(1) 37-2-15 to 49-1-4 zone;C-C for members and forces & MWFRS for reactions shown; Lumber DOL=1.60 plate grip DOL=1.60
3) Provide adequate drainage to prevent water ponding.
4) All plates are MT20 plates unless otherwise indicated.
5) This truss has been designed for a 10.0 psf bottom chord live load nonconcurrent with any other live loads.
6) * This truss has been designed for a live load of 20.0psf on the bottom chord in all areas where a rectangle 3-6-0 tall by 2-0-0 wide will fit between the bottom chord and any other members, with BCDL = 10.0psf.
7) Refer to girder(s) for truss to truss connections.
8) Bearing at joint(s) 2 considers parallel to grain value using ANSI/TPI 1 angle to grain formula. Building designer should verify capacity of bearing surface.
9) Provide mechanical connection (by others) of truss to bearing plate capable of withstanding 100 lb uplift at joint(s) 12.
10) One H2.5A Simpson Strong-Tie connectors recommended to connect truss to bearing walls due to UPLIFT at jt(s) 2. This connection is for uplift only and does not consider lateral forces.
11) This truss is designed in accordance with the 2018 International Residential Code sections R502.11.1 and R802.10.2 and referenced standard ANSI/TPI 1.
12) Graphical purlin representation does not depict the size or the orientation of the purlin along the top and/or bottom chord.

October 27,2021

WARNING - Verify design parameters and READ NOTES ON THIS AND INCLUDED MITEK REFERENCE PAGE MII-7473 rev. 5/19/2020 BEFORE USE.
Design valid for use only with MiTek® connectors. This design is based only upon parameters shown, and is for an individual building component, not a truss system. Before use, the building designer must verify the applicability of design parameters and properly incorporate this design into the overall building design. Bracing indicated is to prevent buckling of individual truss web and/or chord members only. Additional temporary and permanent bracing is always required for stability and to prevent collapse with possible personal injury and property damage. For general guidance regarding the fabrication, storage, delivery, erection and bracing of trusses and truss systems, see **ANSI/TPI1 Quality Criteria, DSB-89 and BCSI Building Component Safety Information** available from Truss Plate Institute, 2670 Crain Highway, Suite 203 Waldorf, MD 20601

ENGINEERING BY TRENCO A MiTek Affiliate
818 Soundside Road
Edenton, NC 27932

Job	Truss	Truss Type	Qty	Ply	KB Home 149.2115.C Vol ceiling and tray
149_2115_C_VO_T	H8V	Hip	1	1	I48539506 Job Reference (optional)

84 Components (Dunn), Dunn, NC - 28334, 8.520 s Aug 27 2021 MiTek Industries, Inc. Wed Oct 27 08:07:37 2021 Page 1

ID:bNZHYySm82JAWDNgfw9uCLzLbIt-GRvFjmdPSJBo_czGRRlOU_8Jra5ioO6FW5V55yyPGra

-0-10-8	5-6-7	8-0-0	14-4-0	20-4-8	28-2-0	35-8-0	42-3-4	49-2-0
0-10-8	5-6-7	2-5-9	6-4-0	6-0-8	7-9-8	7-6-0	6-7-4	6-10-12

Scale = 1:90.3

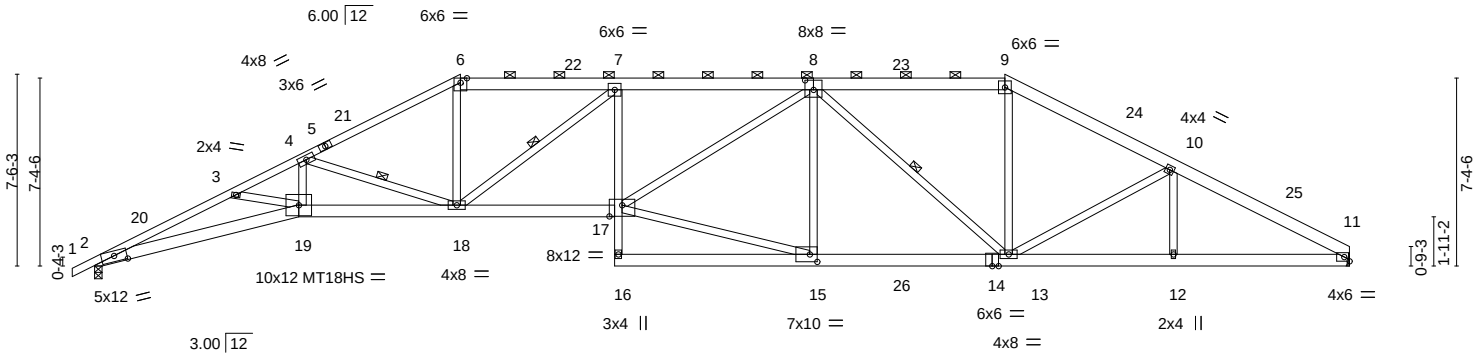

8-0-0	14-4-0	20-4-8	28-2-0	35-8-0	42-3-4	49-2-0
8-0-0	6-4-0	6-0-8	7-9-8	7-6-0	6-7-4	6-10-12

Plate Offsets (X,Y)-- [2:0-6-0,0-2-12], [8:0-4-0,0-4-8], [15:0-3-8,0-3-8], [17:0-6-0,0-5-4]

LOADING (psf)		**SPACING-** 2-0-0	**CSI.**		**DEFL.** in (loc) l/defl L/d	**PLATES**	**GRIP**
TCLL	20.0	Plate Grip DOL 1.15	TC	0.98	Vert(LL) -0.55 17-18 >999 240	MT20	197/144
TCDL	10.0	Lumber DOL 1.15	BC	0.78	Vert(CT) -1.02 17-18 >574 180	MT18HS	244/190
BCLL	0.0 *	Rep Stress Incr YES	WB	0.92	Horz(CT) 0.50 11 n/a n/a		
BCDL	10.0	Code IRC2018/TPI2014	Matrix-S			Weight: 344 lb	FT = 20%

LUMBER-

TOP CHORD 2x6 SP No.2 *Except*
5-6: 2x4 SP DSS, 1-5: 2x4 SP No.1

BOT CHORD 2x6 SP No.2 *Except*
2-19,17-19: 2x6 SP DSS, 7-16: 2x4 SP No.3

WEBS 2x4 SP No.3 *Except*
15-17: 2x4 SP No.2 or 2x4 SPF No.2

BRACING-

TOP CHORD Structural wood sheathing directly applied, except 2-0-0 oc purlins (2-11-10 max.): 6-9.

BOT CHORD Rigid ceiling directly applied or 10-0-0 oc bracing.

WEBS 1 Row at midpt 4-18, 7-18, 8-13

REACTIONS. (size) 11=Mechanical, 2=0-3-8
Max Horz 2=105(LC 11)
Max Uplift 11=-14(LC 12), 2=-40(LC 12)
Max Grav 11=2148(LC 18), 2=2194(LC 17)

FORCES. (lb) - Max. Comp./Max. Ten. - All forces 250 (lb) or less except when shown.

TOP CHORD 2-3=-7952/174, 3-4=-7752/135, 4-6=-4873/121, 6-7=-4289/137, 7-8=-5195/153, 8-9=-3027/146, 9-10=-3466/138, 10-11=-3981/102

BOT CHORD 2-19=-125/7324, 18-19=-43/6849, 17-18=0/5251, 7-17=0/398, 13-15=0/3785, 12-13=-28/3440, 11-12=-28/3440

WEBS 4-19=0/1965, 4-18=-2613/91, 6-18=0/1830, 7-18=-1304/34, 15-17=0/3763, 8-17=-1/1722, 8-15=-737/98, 8-13=-1110/17, 9-13=0/1182, 10-13=-486/73, 10-12=0/271

NOTES-

1) Unbalanced roof live loads have been considered for this design.
2) Wind: ASCE 7-16; Vult=120mph (3-second gust) Vasd=95mph; TCDL=6.0psf; BCDL=6.0psf; h=25ft; B=45ft; L=24ft; eave=6ft; Cat. II; Exp B; Enclosed; MWFRS (directional) and C-C Exterior(2E) -0-10-8 to 2-1-8, Interior(1) 2-1-8 to 14-4-0, Exterior(2R) 14-4-0 to 18-6-15, Interior(1) 18-6-15 to 35-8-0, Exterior(2R) 35-8-0 to 39-10-15, Interior(1) 39-10-15 to 49-1-4 zone;C-C for members and forces & MWFRS for reactions shown; Lumber DOL=1.60 plate grip DOL=1.60
3) Provide adequate drainage to prevent water ponding.
4) All plates are MT20 plates unless otherwise indicated.
5) This truss has been designed for a 10.0 psf bottom chord live load nonconcurrent with any other live loads.
6) * This truss has been designed for a live load of 20.0psf on the bottom chord in all areas where a rectangle 3-6-0 tall by 2-0-0 wide will fit between the bottom chord and any other members, with BCDL = 10.0psf.
7) Refer to girder(s) for truss to truss connections.
8) Bearing at joint(s) 2 considers parallel to grain value using ANSI/TPI 1 angle to grain formula. Building designer should verify capacity of bearing surface.
9) Provide mechanical connection (by others) of truss to bearing plate capable of withstanding 100 lb uplift at joint(s) 11.
10) One H2.5A Simpson Strong-Tie connectors recommended to connect truss to bearing walls due to UPLIFT at jt(s) 2. This connection is for uplift only and does not consider lateral forces.
11) This truss is designed in accordance with the 2018 International Residential Code sections R502.11.1 and R802.10.2 and referenced standard ANSI/TPI 1.
12) Graphical purlin representation does not depict the size or the orientation of the purlin along the top and/or bottom chord.

October 27,2021

WARNING - Verify design parameters and READ NOTES ON THIS AND INCLUDED MITEK REFERENCE PAGE MII-7473 rev. 5/19/2020 BEFORE USE.
Design valid for use only with MiTek® connectors. This design is based only upon parameters shown, and is for an individual building component, not a truss system. Before use, the building designer must verify the applicability of design parameters and properly incorporate this design into the overall building design. Bracing indicated is to prevent buckling of individual truss web and/or chord members only. Additional temporary and permanent bracing is always required for stability and to prevent collapse with possible personal injury and property damage. For general guidance regarding the fabrication, storage, delivery, erection and bracing of trusses and truss systems, see **ANSI/TPI1 Quality Criteria, DSB-89 and BCSI Building Component Safety Information** available from Truss Plate Institute, 2670 Crain Highway, Suite 203 Waldorf, MD 20601

ENGINEERING BY TRENCO A MiTek Affiliate
818 Soundside Road
Edenton, NC 27932

Job	Truss	Truss Type	Qty	Ply	KB Home 149.2115.C Vol ceiling and tray
149_2115_C_VO_T	H9V	Hip	1	1	I48539507 Job Reference (optional)

84 Components (Dunn), Dunn, NC - 28334, 8.520 s Aug 27 2021 MiTek Industries, Inc. Wed Oct 27 08:07:42 2021 Page 1

ID:bNZHYySm82JAWDNgfw9uCLzLbIt-dOj8mUhYHrp54NsDE_LZB1rAnbppTe?_gMDsm9yPGrV

-0-10-8	5-6-7	8-0-0	11-8-0	16-2-0	20-4-8	26-6-11	32-6-3	38-4-0	43-7-4	49-2-0
0-10-8	5-6-7	2-5-9	3-8-0	4-6-0	4-2-8	6-2-3	5-11-9	5-9-13	5-3-4	5-6-12

Scale = 1:88.7

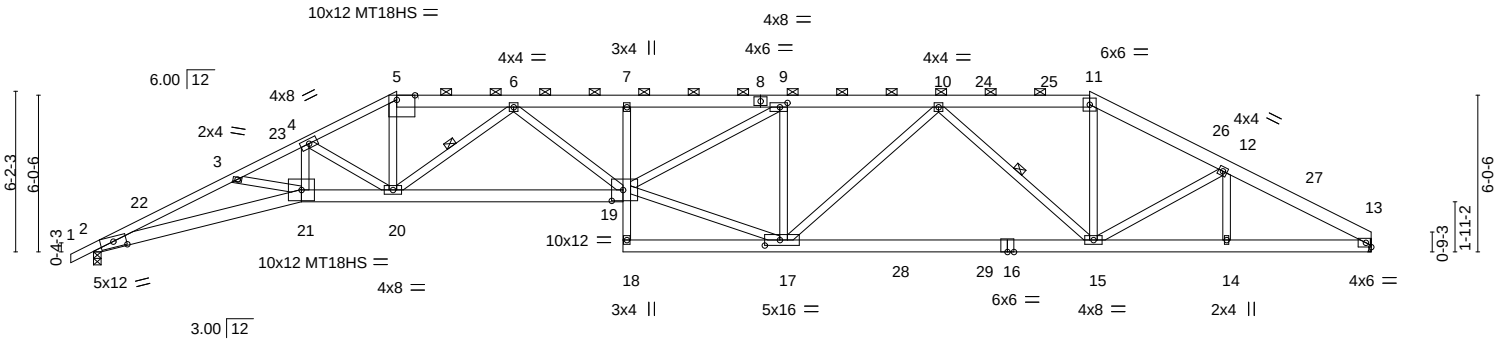

8-0-0	11-8-0	20-4-8	26-6-11	29-6-0	38-4-0	43-7-4	49-2-0
8-0-0	3-8-0	8-8-8	6-2-3	2-11-5	8-10-0	5-3-4	5-6-12

Plate Offsets (X,Y)-- [2:0-6-0,0-2-12], [5:0-8-6,Edge], [9:0-3-8,0-2-0], [17:0-7-0,0-2-8], [19:0-5-4,0-5-0]

LOADING (psf)		SPACING- 2-0-0		CSI.		DEFL.	in	(loc)	l/defl	L/d	PLATES	GRIP
TCLL	20.0	Plate Grip DOL	1.15	TC	0.96	Vert(LL)	-0.67	19-20	>877	240	MT20	197/144
TCDL	10.0	Lumber DOL	1.15	BC	0.72	Vert(CT)	-1.26	19-20	>466	180	MT18HS	244/190
BCLL	0.0 *	Rep Stress Incr	YES	WB	0.94	Horz(CT)	0.51	13	n/a	n/a		
BCDL	10.0	Code IRC2018/TPI2014		Matrix-S							Weight: 338 lb	FT = 20%

LUMBER-

TOP CHORD 2x6 SP No.2 *Except*
1-5: 2x4 SP No.1

BOT CHORD 2x6 SP DSS *Except*
7-18: 2x4 SP No.3

WEBS 2x4 SP No.3 *Except*
17-19: 2x4 SP No.1, 9-19: 2x4 SP No.2 or 2x4 SPF No.2

BRACING-

TOP CHORD Structural wood sheathing directly applied, except 2-0-0 oc purlins (2-5-6 max.): 5-11.

BOT CHORD Rigid ceiling directly applied or 10-0-0 oc bracing.

WEBS 1 Row at midpt 6-20, 10-15

REACTIONS. (size) 13=Mechanical, 2=0-3-8
Max Horz 2=86(LC 11)
Max Uplift 13=-14(LC 12), 2=-40(LC 12)
Max Grav 13=2149(LC 18), 2=2190(LC 17)

FORCES. (lb) - Max. Comp./Max. Ten. - All forces 250 (lb) or less except when shown.

TOP CHORD 2-3=-7914/184, 3-4=-7686/126, 4-5=-5697/105, 5-6=-5056/111, 6-7=-6913/138, 7-9=-6878/143, 9-10=-4734/129, 10-11=-3263/115, 11-12=-3720/109, 12-13=-3959/104

BOT CHORD 2-21=-135/7275, 20-21=-26/6774, 19-20=-17/6257, 7-19=-280/65, 15-17=-23/4164, 14-15=-40/3412, 13-14=-40/3412

WEBS 4-21=0/1850, 4-20=-1881/73, 5-20=0/2294, 6-20=-1563/82, 6-19=0/984, 17-19=0/4845, 9-19=-17/2530, 9-17=-1645/86, 10-17=0/823, 10-15=-1311/75, 11-15=0/1358

NOTES-

1) Unbalanced roof live loads have been considered for this design.
2) Wind: ASCE 7-16; Vult=120mph (3-second gust) Vasd=95mph; TCDL=6.0psf; BCDL=6.0psf; h=25ft; B=45ft; L=24ft; eave=6ft; Cat. II; Exp B; Enclosed; MWFRS (directional) and C-C Exterior(2E) -0-10-8 to 2-1-8, Interior(1) 2-1-8 to 11-8-0, Exterior(2R) 11-8-0 to 16-2-0, Interior(1) 16-2-0 to 38-4-0, Exterior(2R) 38-4-0 to 42-6-15, Interior(1) 42-6-15 to 49-1-4 zone;C-C for members and forces & MWFRS for reactions shown; Lumber DOL=1.60 plate grip DOL=1.60
3) Provide adequate drainage to prevent water ponding.
4) All plates are MT20 plates unless otherwise indicated.
5) This truss has been designed for a 10.0 psf bottom chord live load nonconcurrent with any other live loads.
6) * This truss has been designed for a live load of 20.0psf on the bottom chord in all areas where a rectangle 3-6-0 tall by 2-0-0 wide will fit between the bottom chord and any other members, with BCDL = 10.0psf.
7) Refer to girder(s) for truss to truss connections.
8) Bearing at joint(s) 2 considers parallel to grain value using ANSI/TPI 1 angle to grain formula. Building designer should verify capacity of bearing surface.
9) Provide mechanical connection (by others) of truss to bearing plate capable of withstanding 100 lb uplift at joint(s) 13.
10) One H2.5A Simpson Strong-Tie connectors recommended to connect truss to bearing walls due to UPLIFT at jt(s) 2. This connection is for uplift only and does not consider lateral forces.
11) This truss is designed in accordance with the 2018 International Residential Code sections R502.11.1 and R802.10.2 and referenced standard ANSI/TPI 1.
12) Graphical purlin representation does not depict the size or the orientation of the purlin along the top and/or bottom chord.

October 27,2021

WARNING - Verify design parameters and READ NOTES ON THIS AND INCLUDED MITEK REFERENCE PAGE MII-7473 rev. 5/19/2020 BEFORE USE.
Design valid for use only with MiTek® connectors. This design is based only upon parameters shown, and is for an individual building component, not a truss system. Before use, the building designer must verify the applicability of design parameters and properly incorporate this design into the overall building design. Bracing indicated is to prevent buckling of individual truss web and/or chord members only. Additional temporary and permanent bracing is always required for stability and to prevent collapse with possible personal injury and property damage. For general guidance regarding the fabrication, storage, delivery, erection and bracing of trusses and truss systems, see **ANSI/TPI1 Quality Criteria, DSB-89 and BCSI Building Component Safety Information** available from Truss Plate Institute, 2670 Crain Highway, Suite 203 Waldorf, MD 20601

ENGINEERING BY TRENCO A MiTek Affiliate
818 Soundside Road
Edenton, NC 27932

Job	Truss	Truss Type	Qty	Ply	KB Home 149.2115.C Vol ceiling and tray
149_2115_C_VO_T	H10V	Hip	1	1	I48539508 Job Reference (optional)

84 Components (Dunn), Dunn, NC - 28334, 8.520 s Aug 27 2021 MiTek Industries, Inc. Wed Oct 27 08:07:18 2021 Page 1
ID:bNZHYySm82JAWDNgfw9uCLzLbIt-KnG3kGOUwToVCh0cqxvwD_r4mwZTrnAS9eObwZyPGrt

-0-10-8	6-7-8	9-0-0	14-10-0	20-4-8	25-0-0	33-0-14	41-0-0	44-11-4	49-2-0
0-10-8	6-7-8	2-4-8	5-10-0	5-6-8	4-7-8	8-0-14	7-11-2	3-11-4	4-2-12

Scale = 1:88.7

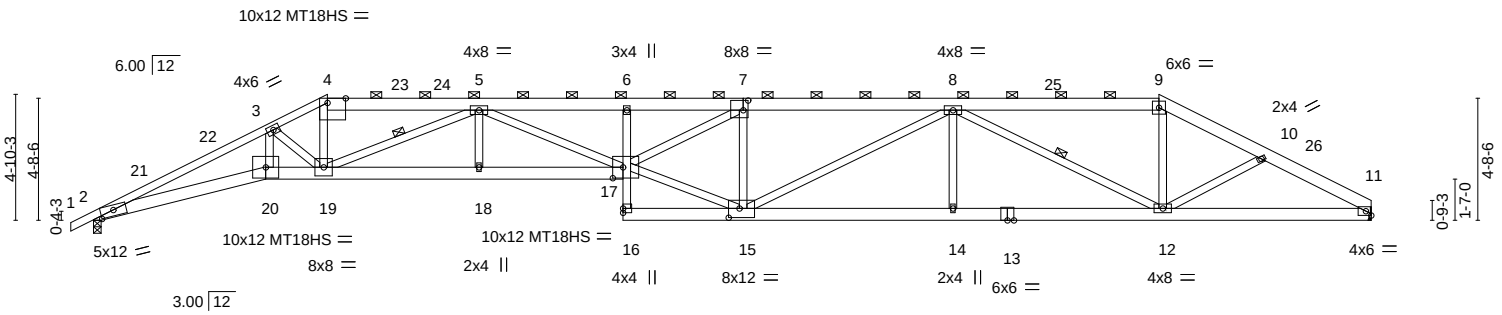

6-7-8	9-0-0	14-10-0	20-4-8	25-0-0	33-0-14	41-0-0	49-2-0
6-7-8	2-4-8	5-10-0	5-6-8	4-7-8	8-0-14	7-11-2	8-2-0

Plate Offsets (X,Y)-- [2:0-6-0,0-2-12], [4:0-8-6,Edge], [7:0-2-4,0-4-8], [15:0-5-0,0-4-4], [17:0-4-12,0-5-0]

LOADING (psf)		SPACING- 2-0-0		CSI.		DEFL.	in	(loc)	l/defl	L/d	PLATES	GRIP
TCLL	20.0	Plate Grip DOL	1.15	TC	0.97	Vert(LL)	-0.81	17	>730	240	MT20	197/144
TCDL	10.0	Lumber DOL	1.15	BC	0.96	Vert(CT)	-1.61	17	>365	180	MT18HS	197/144
BCLL	0.0 *	Rep Stress Incr	YES	WB	0.99	Horz(CT)	0.54	11	n/a	n/a		
BCDL	10.0	Code IRC2018/TPI2014		Matrix-S							Weight: 327 lb	FT = 20%

LUMBER-

TOP CHORD 2x6 SP No.2 *Except*
1-4: 2x4 SP DSS
BOT CHORD 2x6 SP No.2 *Except*
2-20,17-20: 2x6 SP DSS, 6-16: 2x4 SP No.2 or 2x4 SPF No.2
WEBS 2x4 SP No.3 *Except*
15-17: 2x4 SP No.1, 7-17: 2x4 SP No.2 or 2x4 SPF No.2

BRACING-

TOP CHORD Structural wood sheathing directly applied or 2-1-1 oc purlins, except 2-0-0 oc purlins (2-0-11 max.): 4-9.
BOT CHORD Rigid ceiling directly applied or 10-0-0 oc bracing, Except: 2-2-0 oc bracing: 14-15,12-14.
WEBS 1 Row at midpt 5-19, 8-12

REACTIONS. (size) 11=Mechanical, 2=0-3-8
Max Horz 2=67(LC 11)
Max Uplift 11=-14(LC 12), 2=-40(LC 12)
Max Grav 11=1958(LC 1), 2=2020(LC 1)

FORCES. (lb) - Max. Comp./Max. Ten. - All forces 250 (lb) or less except when shown.
TOP CHORD 2-3=-7265/134, 3-4=-5783/121, 4-5=-5137/110, 5-6=-8637/148, 6-7=-8565/149, 7-8=-5709/135, 8-9=-3105/108, 9-10=-3518/101, 10-11=-3576/121
BOT CHORD 2-20=-76/6591, 19-20=-66/6263, 18-19=-29/7585, 17-18=-29/7585, 15-16=-8/318, 14-15=-29/5062, 12-14=-29/5062, 11-12=-62/3049
WEBS 3-20=0/1503, 3-19=-1325/90, 4-19=-23/2221, 5-19=-2738/47, 5-17=-11/1237, 15-17=-16/5719, 7-17=-16/3320, 7-15=-2147/90, 8-15=-2/787, 8-14=0/319, 8-12=-2270/39, 9-12=0/1161, 10-12=0/269

NOTES-

1) Unbalanced roof live loads have been considered for this design.
2) Wind: ASCE 7-16; Vult=120mph (3-second gust) Vasd=95mph; TCDL=6.0psf; BCDL=6.0psf; h=25ft; B=45ft; L=24ft; eave=6ft; Cat. II; Exp B; Enclosed; MWFRS (directional) and C-C Exterior(2E) -0-10-8 to 2-1-8, Interior(1) 2-1-8 to 9-0-0, Exterior(2R) 9-0-0 to 13-2-15, Interior(1) 13-2-15 to 41-0-0, Exterior(2R) 41-0-0 to 45-2-4, Interior(1) 45-2-4 to 49-1-4 zone;C-C for members and forces & MWFRS for reactions shown; Lumber DOL=1.60 plate grip DOL=1.60
3) Provide adequate drainage to prevent water ponding.
4) All plates are MT20 plates unless otherwise indicated.
5) This truss has been designed for a 10.0 psf bottom chord live load nonconcurrent with any other live loads.
6) * This truss has been designed for a live load of 20.0psf on the bottom chord in all areas where a rectangle 3-6-0 tall by 2-0-0 wide will fit between the bottom chord and any other members.
7) Refer to girder(s) for truss to truss connections.
8) Bearing at joint(s) 2 considers parallel to grain value using ANSI/TPI 1 angle to grain formula. Building designer should verify capacity of bearing surface.
9) Provide mechanical connection (by others) of truss to bearing plate capable of withstanding 100 lb uplift at joint(s) 11.
10) One H2.5A Simpson Strong-Tie connectors recommended to connect truss to bearing walls due to UPLIFT at jt(s) 2. This connection is for uplift only and does not consider lateral forces.
11) This truss is designed in accordance with the 2018 International Residential Code sections R502.11.1 and R802.10.2 and referenced standard ANSI/TPI 1.
12) Graphical purlin representation does not depict the size or the orientation of the purlin along the top and/or bottom chord.

October 27,2021

WARNING - Verify design parameters and READ NOTES ON THIS AND INCLUDED MITEK REFERENCE PAGE MII-7473 rev. 5/19/2020 BEFORE USE.
Design valid for use only with MiTek® connectors. This design is based only upon parameters shown, and is for an individual building component, not a truss system. Before use, the building designer must verify the applicability of design parameters and properly incorporate this design into the overall building design. Bracing indicated is to prevent buckling of individual truss web and/or chord members only. Additional temporary and permanent bracing is always required for stability and to prevent collapse with possible personal injury and property damage. For general guidance regarding the fabrication, storage, delivery, erection and bracing of trusses and truss systems, see **ANSI/TPI1 Quality Criteria, DSB-89 and BCSI Building Component Safety Information** available from Truss Plate Institute, 2670 Crain Highway, Suite 203 Waldorf, MD 20601

ENGINEERING BY TRENCO A MiTek Affiliate
818 Soundside Road
Edenton, NC 27932

Job	Truss	Truss Type	Qty	Ply	KB Home 149.2115.C Vol ceiling and tray
149_2115_C_VO_T	HG1	HALF HIP GIRDER	1	1	I48539509 Job Reference (optional)

84 Components (Dunn), Dunn, NC - 28334, 8.520 s Aug 27 2021 MiTek Industries, Inc. Wed Oct 27 08:07:45 2021 Page 1
ID:bNZHYySm82JAWDNgfw9uCLzLbIt-1zOGPVjQamBfyqbov6uGpgThgpqPg_rRMKRWNUyPGrS

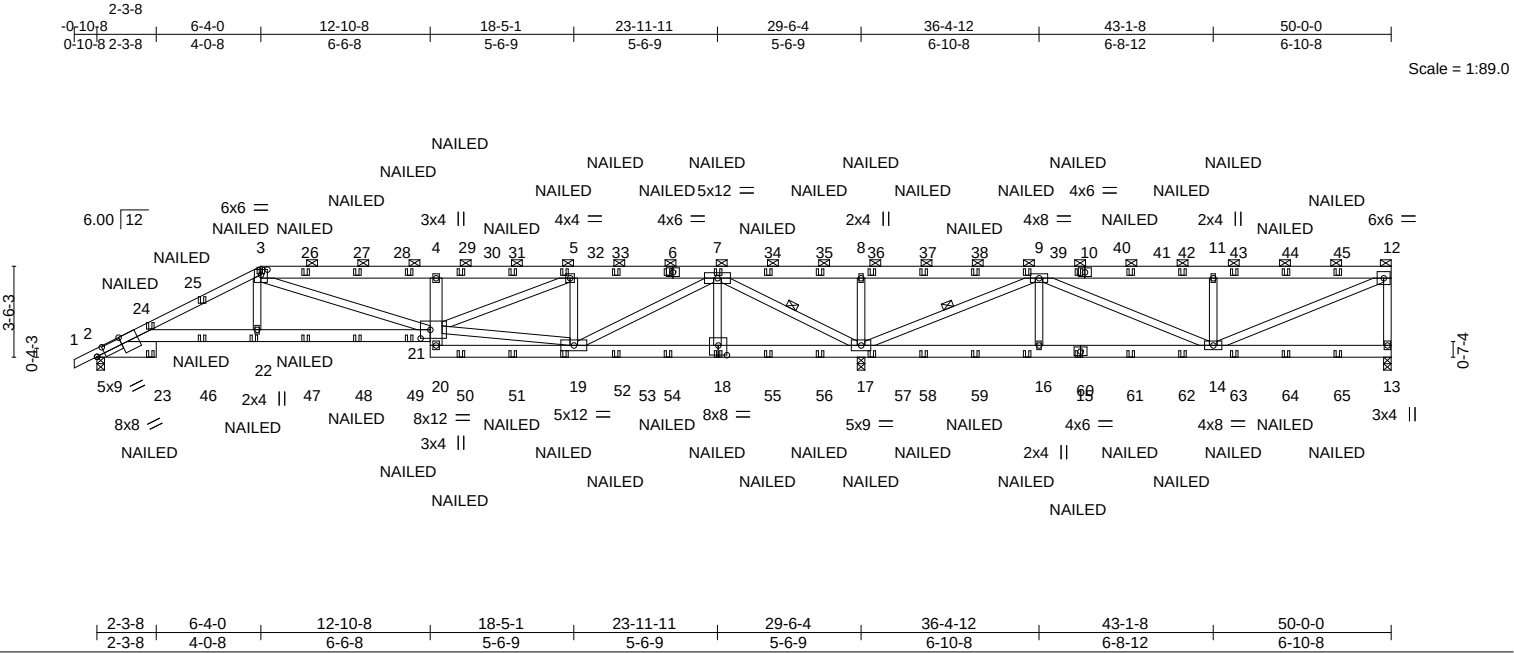

Plate Offsets (X,Y)-- [2:1-0-14,Edge], [2:0-3-14,0-3-0], [3:0-3-0,0-2-7], [18:0-4-0,0-4-8], [21:0-4-8,0-4-0]

LOADING (psf)		SPACING- 2-0-0		CSI.		DEFL.	in	(loc)	l/defl	L/d	PLATES	GRIP
TCLL	20.0	Plate Grip DOL	1.15	TC	0.99	Vert(LL)	-0.17	21	>999	240	MT20	244/190
TCDL	10.0	Lumber DOL	1.15	BC	0.80	Vert(CT)	-0.36	21-22	>988	180		
BCLL	0.0 *	Rep Stress Incr	NO	WB	1.00	Horz(CT)	0.09	17	n/a	n/a		
BCDL	10.0	Code IRC2018/TPI2014		Matrix-S							Weight: 342 lb	FT = 20%

LUMBER-

TOP CHORD 2x6 SP DSS *Except*
1-3: 2x4 SP No.2, 10-12: 2x6 SP No.2
BOT CHORD 2x6 SP No.2 *Except*
2-23: 2x8 SP No.2, 2-21: 2x6 SP DSS
WEBS 2x4 SP No.3

BRACING-

TOP CHORD Structural wood sheathing directly applied, except end verticals, and 2-0-0 oc purlins (4-4-5 max.): 3-12.
BOT CHORD Rigid ceiling directly applied or 10-0-0 oc bracing, Except: 6-0-0 oc bracing: 16-17,14-16.
WEBS 1 Row at midpt 7-17, 9-17

REACTIONS. (size) 13=0-3-8, 2=0-3-8, 17=(0-3-8 + TBE4 Simpson Strong-Tie) (req. 0-6-1)
Max Horz 2=98(LC 7)
Max Uplift 13=-122(LC 5), 2=-73(LC 8), 17=-358(LC 8)
Max Grav 13=747(LC 20), 2=1479(LC 1), 17=3864(LC 1)

FORCES. (lb) - Max. Comp./Max. Ten. - All forces 250 (lb) or less except when shown.
TOP CHORD 2-3=-3350/104, 3-4=-3570/240, 4-5=-3349/234, 5-7=-2117/196, 7-8=-215/2969, 8-9=-215/2969, 9-11=-922/164, 11-12=-922/164, 12-13=-659/166
BOT CHORD 2-22=-93/2914, 21-22=-88/2873, 4-21=-524/165, 19-20=-77/1003
WEBS 3-22=0/708, 3-21=-130/811, 19-21=-62/1122, 5-21=-42/1356, 5-19=-1089/192, 7-19=-150/2338, 7-18=0/295, 7-17=-3469/292, 8-17=-675/210, 9-17=-3041/309, 9-16=0/392, 9-14=-107/1206, 11-14=-667/268, 12-14=-194/967

NOTES-

1) Unbalanced roof live loads have been considered for this design.
2) Wind: ASCE 7-16; Vult=120mph (3-second gust) Vasd=95mph; TCDL=6.0psf; BCDL=6.0psf; h=25ft; B=45ft; L=24ft; eave=6ft; Cat. II; Exp B; Enclosed; MWFRS (directional); cantilever left and right exposed ; end vertical left and right exposed; Lumber DOL=1.60 plate grip DOL=1.60
3) Provide adequate drainage to prevent water ponding.
4) This truss has been designed for a 10.0 psf bottom chord live load nonconcurrent with any other live loads.
5) * This truss has been designed for a live load of 20.0psf on the bottom chord in all areas where a rectangle 3-6-0 tall by 2-0-0 wide will fit between the bottom chord and any other members.
6) TBE4 Simpson Strong-Tie connectors recommended to connect truss to bearing walls due to UPLIFT at jt(s) 17. This connection is for uplift only and does not consider lateral forces.
7) One H2.5A Simpson Strong-Tie connectors recommended to connect truss to bearing walls due to UPLIFT at jt(s) 13 and 2. This connection is for uplift only and does not consider lateral forces.
8) This truss is designed in accordance with the 2018 International Residential Code sections R502.11.1 and R802.10.2 and referenced standard ANSI/TPI 1.
9) Graphical purlin representation does not depict the size or the orientation of the purlin along the top and/or bottom chord.
10) "NAILED" indicates 3-10d (0.148"x3") or 3-12d (0.148"x3.25") toe-nails per NDS guidlines.
11) In the LOAD CASE(S) section, loads applied to the face of the truss are noted as front (F) or back (B).

LOAD CASE(S) Standard

October 27,2021

Continued on page 2

WARNING - Verify design parameters and READ NOTES ON THIS AND INCLUDED MITEK REFERENCE PAGE MII-7473 rev. 5/19/2020 BEFORE USE.
Design valid for use only with MiTek® connectors. This design is based only upon parameters shown, and is for an individual building component, not a truss system. Before use, the building designer must verify the applicability of design parameters and properly incorporate this design into the overall building design. Bracing indicated is to prevent buckling of individual truss web and/or chord members only. Additional temporary and permanent bracing is always required for stability and to prevent collapse with possible personal injury and property damage. For general guidance regarding the fabrication, storage, delivery, erection and bracing of trusses and truss systems, see **ANSI/TPI1 Quality Criteria, DSB-89 and BCSI Building Component Safety Information** available from Truss Plate Institute, 2670 Crain Highway, Suite 203 Waldorf, MD 20601

ENGINEERING BY TRENCO A MiTek Affiliate
818 Soundside Road
Edenton, NC 27932

LOAD CASE(S) Standard

1) Dead + Roof Live (balanced): Lumber Increase=1.15, Plate Increase=1.15
   Uniform Loads (plf)
   Vert: 1-3=-60, 3-12=-60, 2-21=-20, 13-20=-20
   Concentrated Loads (lb)
   Vert: 3=-42(F) 6=-61(F) 12=-23 23=-34(F) 15=-23(F) 22=-42(F) 7=-61(F) 18=-23(F) 10=-61(F) 24=-48(F) 25=-38(F) 26=-34(F) 27=-34(F) 29=-34(F) 30=-61(F) 31=-61(F) 32=-61(F) 33=-61(F) 34=-61(F) 35=-61(F) 36=-61(F) 37=-61(F) 38=-61(F) 39=-61(F) 41=-61(F) 42=-61(F) 43=-61(F) 44=-61(F) 45=-61(F) 46=-46(F) 47=-50(F) 48=-50(F) 49=-50(F) 50=-23(F) 51=-23(F) 52=-23(F) 53=-23(F) 54=-23(F) 55=-23(F) 56=-23(F) 57=-23(F) 58=-23(F) 59=-23(F) 60=-23(F) 61=-23(F) 62=-23(F) 63=-23(F) 64=-23(F) 65=-23(F)

WARNING - Verify design parameters and READ NOTES ON THIS AND INCLUDED MITEK REFERENCE PAGE MII-7473 rev. 5/19/2020 BEFORE USE.
Design valid for use only with MiTek® connectors. This design is based only upon parameters shown, and is for an individual building component, not a truss system. Before use, the building designer must verify the applicability of design parameters and properly incorporate this design into the overall building design. Bracing indicated is to prevent buckling of individual truss web and/or chord members only. Additional temporary and permanent bracing is always required for stability and to prevent collapse with possible personal injury and property damage. For general guidance regarding the fabrication, storage, delivery, erection and bracing of trusses and truss systems, see **ANSI/TPI1 Quality Criteria, DSB-89 and BCSI Building Component Safety Information** available from Truss Plate Institute, 2670 Crain Highway, Suite 203 Waldorf, MD 20601

ENGINEERING BY TRENCO A MiTek Affiliate
818 Soundside Road
Edenton, NC 27932

Job	Truss	Truss Type	Qty	Ply	KB Home 149.2115.C Vol ceiling and tray
149_2115_C_VO_T	HGV	HALF HIP GIRDER	1	2	I48539510 Job Reference (optional)

84 Components (Dunn), Dunn, NC - 28334, 8.520 s Aug 27 2021 MiTek Industries, Inc. Wed Oct 27 08:07:57 2021 Page 1

ID:bNZHYySm82JAWDNgfw9uCLzLbIt-hH7owcsylSiyOgV6ce64ICzmfew3UPKC7CL9ooyPGrG

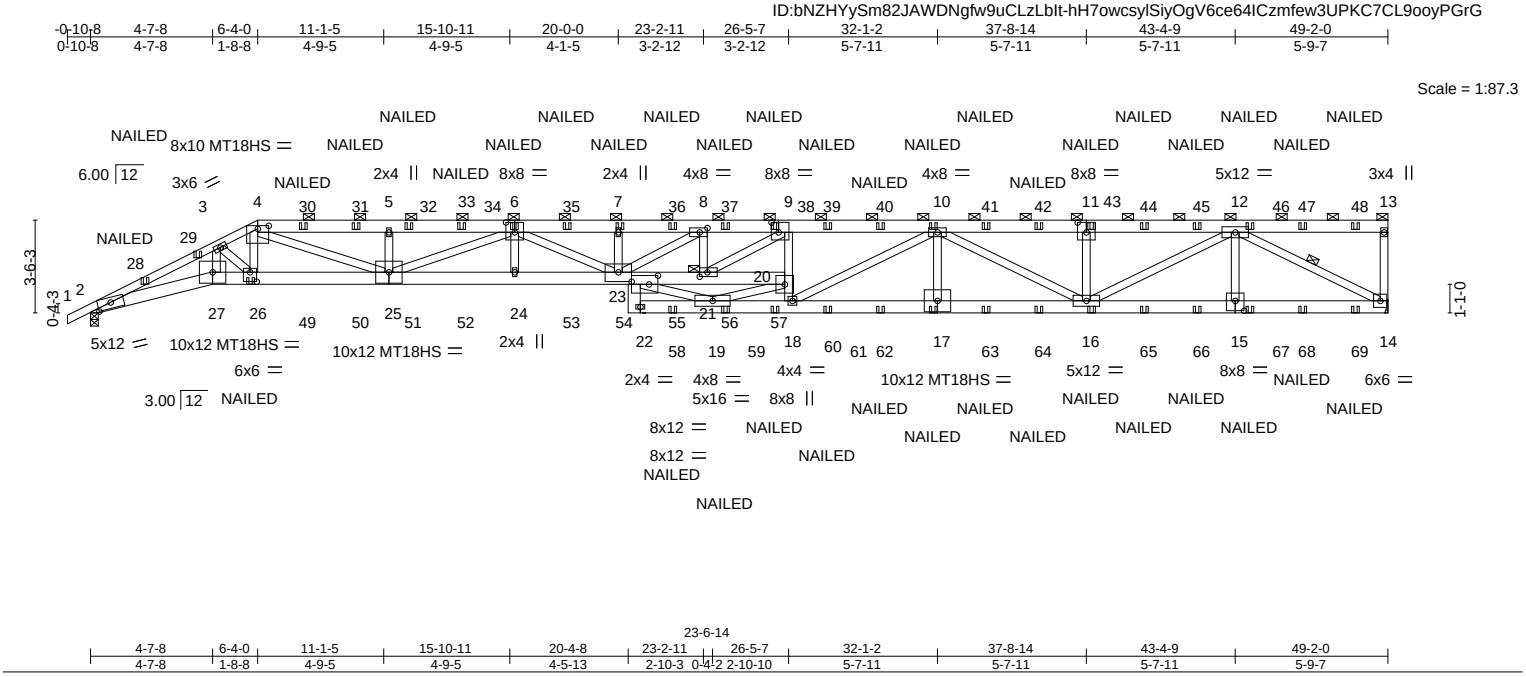

Plate Offsets (X,Y)-- [2:0-6-0,0-2-12], [4:0-5-0,0-1-7], [6:0-4-0,0-4-8], [8:0-3-8,0-2-0], [9:0-3-4,0-4-8], [11:0-4-0,0-4-8], [15:0-4-0,0-4-8], [21:0-3-8,0-2-0], [23:0-4-1,0-4-0], [23:0-6-0,0-4-4], [26:0-3-0,0-4-4]

LOADING (psf)		SPACING- 2-0-0		CSI.		DEFL. in (loc) l/defl L/d		PLATES	GRIP
TCLL	20.0	Plate Grip DOL	1.15	TC	0.86	Vert(LL) -1.21 23-24 >486 240		MT20	197/144
TCDL	10.0	Lumber DOL	1.15	BC	0.80	Vert(CT) -2.04 23 >287 180		MT18HS	197/144
BCLL	0.0 *	Rep Stress Incr	NO	WB	0.96	Horz(CT) 0.49 14 n/a n/a			
BCDL	10.0	Code IRC2018/TPI2014		Matrix-S				Weight: 703 lb	FT = 20%

LUMBER-

TOP CHORD 2x6 SP No.2 *Except*
1-4: 2x4 SP No.1, 6-9: 2x6 SP DSS

BOT CHORD 2x6 SP DSS *Except*
14-15: 2x6 SP No.2

WEBS 2x4 SP No.3 *Except*
4-25,9-21,19-23,8-23,19-20: 2x4 SP No.2 or 2x4 SPF No.2

BRACING-

TOP CHORD Structural wood sheathing directly applied or 2-6-11 oc purlins, except end verticals, and 2-0-0 oc purlins (3-1-2 max.): 4-13.

BOT CHORD Rigid ceiling directly applied or 10-0-0 oc bracing, Except:
7-8-0 oc bracing: 24-25
7-8-2 oc bracing: 23-24.

WEBS 1 Row at midpt 12-14

JOINTS 1 Brace at Jt(s): 13, 21

REACTIONS. (size) 14=Mechanical, 2=0-3-8
Max Horz 2=93(LC 35)
Max Uplift 14=-603(LC 5), 2=-982(LC 8)
Max Grav 14=3256(LC 1), 2=3581(LC 1)

FORCES. (lb) - Max. Comp./Max. Ten. - All forces 250 (lb) or less except when shown.

TOP CHORD 2-3=-13115/3750, 3-4=-11465/3416, 4-5=-16262/4948, 5-6=-16261/4947, 6-7=-21435/5885, 7-8=-21412/5874, 8-9=-18141/4725, 9-10=-13761/3308, 10-11=-9482/1940, 11-12=-9482/1940

BOT CHORD 2-27=-3463/11893, 26-27=-3316/11354, 25-26=-3069/10268, 24-25=-5939/20220, 23-24=-5939/20220, 21-23=-3048/10736, 20-21=-1653/6441, 18-19=-3268/13606, 17-18=-2724/12388, 16-17=-2724/12388, 15-16=-1050/5452, 14-15=-1050/5452

WEBS 3-27=-447/1887, 3-26=-1254/273, 4-26=-615/2161, 4-25=-2026/6474, 5-25=-473/96, 6-25=-4353/1073, 6-24=-342/718, 6-23=0/1591, 9-21=-1635/5077, 18-20=-936/441, 9-20=-3104/1021, 10-18=-664/1655, 10-17=0/433, 10-16=-3305/892, 11-16=-477/181, 12-16=-1013/4582, 12-15=0/385, 12-14=-6132/1183, 19-23=-1777/7847, 8-21=-2639/911, 8-23=-1415/4127, 19-20=-6625/1700

NOTES-

1) 2-ply truss to be connected together with 10d (0.131"x3") nails as follows:
Top chords connected as follows: 2x4 - 1 row at 0-7-0 oc, 2x6 - 2 rows staggered at 0-9-0 oc.
Bottom chords connected as follows: 2x6 - 2 rows staggered at 0-9-0 oc.
Webs connected as follows: 2x4 - 1 row at 0-9-0 oc.
2) All loads are considered equally applied to all plies, except if noted as front (F) or back (B) face in the LOAD CASE(S) section. Ply to ply connections have been provided to distribute only loads noted as (F) or (B), unless otherwise indicated.
3) Unbalanced roof live loads have been considered for this design.
4) Wind: ASCE 7-16; Vult=120mph (3-second gust) Vasd=95mph; TCDL=6.0psf; BCDL=6.0psf; h=25ft; B=45ft; L=24ft; eave=6ft; Cat. II; Exp B; Enclosed; MWFRS (directional); Lumber DOL=1.60 plate grip DOL=1.60
5) Provide adequate drainage to prevent water ponding.
6) All plates are MT20 plates unless otherwise indicated.
7) This truss has been designed for a 10.0 psf bottom chord live load nonconcurrent with any other live loads.
8) * This truss has been designed for a live load of 20.0psf on the bottom chord in all areas where a rectangle 3-6-0 tall by 2-0-0 wide will fit between the bottom chord and any other members.

Continued on page 2

NORTH CAROLINA PROFESSIONAL SEAL 044925 ENGINEER SCOTT M. SEVIER

October 27,2021

WARNING - Verify design parameters and READ NOTES ON THIS AND INCLUDED MITEK REFERENCE PAGE MII-7473 rev. 5/19/2020 BEFORE USE.
Design valid for use only with MiTek® connectors. This design is based only upon parameters shown, and is for an individual building component, not a truss system. Before use, the building designer must verify the applicability of design parameters and properly incorporate this design into the overall building design. Bracing indicated is to prevent buckling of individual truss web and/or chord members only. Additional temporary and permanent bracing is always required for stability and to prevent collapse with possible personal injury and property damage. For general guidance regarding the fabrication, storage, delivery, erection and bracing of trusses and truss systems, see **ANSI/TPI1 Quality Criteria, DSB-89 and BCSI Building Component Safety Information** available from Truss Plate Institute, 2670 Crain Highway, Suite 203 Waldorf, MD 20601

ENGINEERING BY TRENCO A MiTek Affiliate
818 Soundside Road
Edenton, NC 27932

NOTES-

9) Refer to girder(s) for truss to truss connections.
10) Bearing at joint(s) 2 considers parallel to grain value using ANSI/TPI 1 angle to grain formula. Building designer should verify capacity of bearing surface.
11) Provide mechanical connection (by others) of truss to bearing plate capable of withstanding 100 lb uplift at joint(s) except (jt=lb) 14=603.
12) Two H2.5A Simpson Strong-Tie connectors recommended to connect truss to bearing walls due to UPLIFT at jt(s) 2. This connection is for uplift only and does not consider lateral forces.
13) This truss is designed in accordance with the 2018 International Residential Code sections R502.11.1 and R802.10.2 and referenced standard ANSI/TPI 1.
14) Graphical purlin representation does not depict the size or the orientation of the purlin along the top and/or bottom chord.
15) "NAILED" indicates 3-10d (0.148"x3") or 3-12d (0.148"x3.25") toe-nails per NDS guidlines.
16) Hanger(s) or other connection device(s) shall be provided sufficient to support concentrated load(s) 215 lb down and 166 lb up at 8-0-12, 215 lb down and 166 lb up at 10-0-12, 215 lb down and 166 lb up at 12-0-12, 215 lb down and 166 lb up at 14-0-12, 215 lb down and 166 lb up at 16-0-12, and 215 lb down and 166 lb up at 18-0-12, and 215 lb down and 166 lb up at 20-0-12 on bottom chord. The design/selection of such connection device(s) is the responsibility of others.

LOAD CASE(S) Standard

1) Dead + Roof Live (balanced): Lumber Increase=1.15, Plate Increase=1.15
   Uniform Loads (plf)
   Vert: 1-4=-60, 4-13=-60, 2-27=-20, 23-27=-20, 14-22=-20
   Concentrated Loads (lb)
   Vert: 26=-22(B) 6=-14(B) 24=-215(B) 17=-23(B) 10=-61(B) 11=-61(B) 16=-23(B) 7=-14(B) 28=-40(B) 29=-25(B) 30=-14(B) 31=-14(B) 33=-14(B) 34=-14(B) 35=-14(B) 36=-61(B) 37=-61(B) 38=-61(B) 39=-61(B) 40=-61(B) 41=-61(B) 42=-61(B) 44=-61(B) 45=-61(B) 46=-61(B) 47=-61(B) 48=-61(B) 49=-215(B) 50=-215(B) 51=-215(B) 52=-215(B) 53=-215(B) 54=-215(B) 55=-23(B) 56=-23(B) 57=-23(B) 61=-23(B) 62=-23(B) 63=-23(B) 64=-23(B) 65=-23(B) 66=-23(B) 67=-23(B) 68=-23(B) 69=-23(B)

WARNING - Verify design parameters and READ NOTES ON THIS AND INCLUDED MITEK REFERENCE PAGE MII-7473 rev. 5/19/2020 BEFORE USE.
Design valid for use only with MiTek® connectors. This design is based only upon parameters shown, and is for an individual building component, not a truss system. Before use, the building designer must verify the applicability of design parameters and properly incorporate this design into the overall building design. Bracing indicated is to prevent buckling of individual truss web and/or chord members only. Additional temporary and permanent bracing is always required for stability and to prevent collapse with possible personal injury and property damage. For general guidance regarding the fabrication, storage, delivery, erection and bracing of trusses and truss systems, see **ANSI/TPI1 Quality Criteria, DSB-89 and BCSI Building Component Safety Information** available from Truss Plate Institute, 2670 Crain Highway, Suite 203 Waldorf, MD 20601

ENGINEERING BY TRENCO A MiTek Affiliate
818 Soundside Road
Edenton, NC 27932

Job	Truss	Truss Type	Qty	Ply	KB Home 149.2115.C Vol ceiling and tray
149_2115_C_VO_T	J1	Jack-Open	32	1	I48539511 Job Reference (optional)

84 Components (Dunn), Dunn, NC - 28334, 8.520 s Aug 27 2021 MiTek Industries, Inc. Wed Oct 27 08:08:00 2021 Page 1
ID:bNZHYySm82JAWDNgfw9uCLzLbIt-5soxYdvq1N4XF8EhImfnwqbPIs4rh?6epAapP7yPGrD

-0-10-8 4-6-0
0-10-8 4-6-0

Scale = 1:20.5

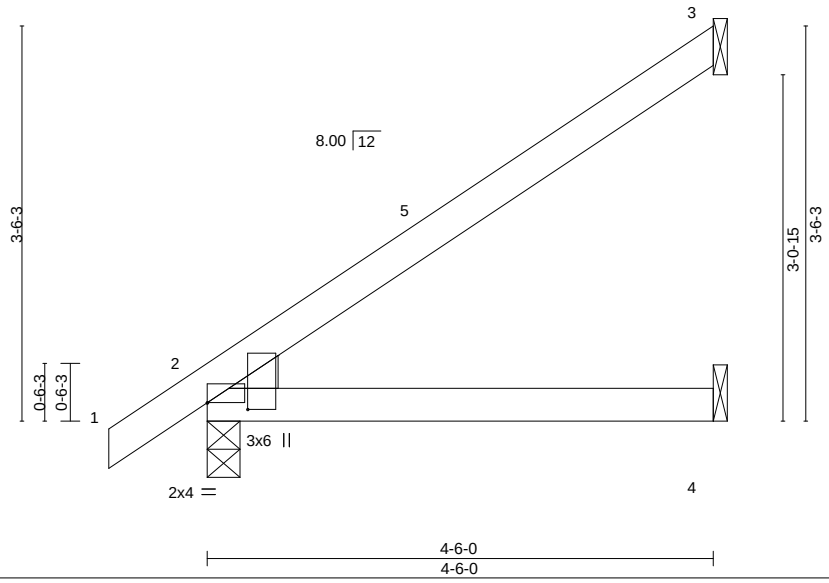

Plate Offsets (X,Y)-- [2:0-0-0,0-0-0], [2:0-0-11,0-4-5]

LOADING (psf)		SPACING- 2-0-0		CSI.		DEFL. in (loc) l/defl L/d		PLATES GRIP
TCLL	20.0	Plate Grip DOL	1.15	TC	0.32	Vert(LL) -0.02 2-4 >999 240		MT20 197/144
TCDL	10.0	Lumber DOL	1.15	BC	0.22	Vert(CT) -0.04 2-4 >999 180		
BCLL	0.0 *	Rep Stress Incr	YES	WB	0.00	Horz(CT) -0.00 3 n/a n/a		
BCDL	10.0	Code IRC2018/TPI2014		Matrix-P				Weight: 17 lb FT = 20%

LUMBER-
TOP CHORD 2x4 SP No.2 or 2x4 SPF No.2
BOT CHORD 2x4 SP No.2 or 2x4 SPF No.2
WEDGE
Left: 2x4 SP No.3

BRACING-
TOP CHORD Structural wood sheathing directly applied or 4-6-0 oc purlins.
BOT CHORD Rigid ceiling directly applied or 10-0-0 oc bracing.

REACTIONS. (size) 3=Mechanical, 2=0-3-8, 4=Mechanical
Max Horz 2=92(LC 12)
Max Uplift 3=-52(LC 12), 2=-2(LC 12)
Max Grav 3=122(LC 17), 2=240(LC 1), 4=86(LC 3)

FORCES. (lb) - Max. Comp./Max. Ten. - All forces 250 (lb) or less except when shown.

NOTES-
1) Wind: ASCE 7-16; Vult=120mph (3-second gust) Vasd=95mph; TCDL=6.0psf; BCDL=6.0psf; h=25ft; B=45ft; L=24ft; eave=4ft; Cat. II; Exp B; Enclosed; MWFRS (directional) and C-C Exterior(2E) -0-10-8 to 2-1-8, Interior(1) 2-1-8 to 4-5-4 zone;C-C for members and forces & MWFRS for reactions shown; Lumber DOL=1.60 plate grip DOL=1.60
2) This truss has been designed for a 10.0 psf bottom chord live load nonconcurrent with any other live loads.
3) * This truss has been designed for a live load of 20.0psf on the bottom chord in all areas where a rectangle 3-6-0 tall by 2-0-0 wide will fit between the bottom chord and any other members.
4) Refer to girder(s) for truss to truss connections.
5) Provide mechanical connection (by others) of truss to bearing plate capable of withstanding 100 lb uplift at joint(s) 3.
6) One H2.5A Simpson Strong-Tie connectors recommended to connect truss to bearing walls due to UPLIFT at jt(s) 2. This connection is for uplift only and does not consider lateral forces.
7) This truss is designed in accordance with the 2018 International Residential Code sections R502.11.1 and R802.10.2 and referenced standard ANSI/TPI 1.

October 27,2021

WARNING - Verify design parameters and READ NOTES ON THIS AND INCLUDED MITEK REFERENCE PAGE MII-7473 rev. 5/19/2020 BEFORE USE.
Design valid for use only with MiTek® connectors. This design is based only upon parameters shown, and is for an individual building component, not a truss system. Before use, the building designer must verify the applicability of design parameters and properly incorporate this design into the overall building design. Bracing indicated is to prevent buckling of individual truss web and/or chord members only. Additional temporary and permanent bracing is always required for stability and to prevent collapse with possible personal injury and property damage. For general guidance regarding the fabrication, storage, delivery, erection and bracing of trusses and truss systems, see **ANSI/TPI1 Quality Criteria, DSB-89 and BCSI Building Component Safety Information** available from Truss Plate Institute, 2670 Crain Highway, Suite 203 Waldorf, MD 20601

ENGINEERING BY TRENCO A MiTek Affiliate
818 Soundside Road
Edenton, NC 27932

Job	Truss	Truss Type	Qty	Ply	KB Home 149.2115.C Vol ceiling and tray
149_2115_C_VO_T	J1T	Jack-Open	3	1	I48539512 Job Reference (optional)

84 Components (Dunn), Dunn, NC - 28334, 8.520 s Aug 27 2021 MiTek Industries, Inc. Wed Oct 27 08:08:01 2021 Page 1
ID:bNZHYySm82JAWDNgfw9uCLzLbIt-Z2MJmzwSogCOsIptrTB0S27dLFPZQSMn2qJNxZyPGrC

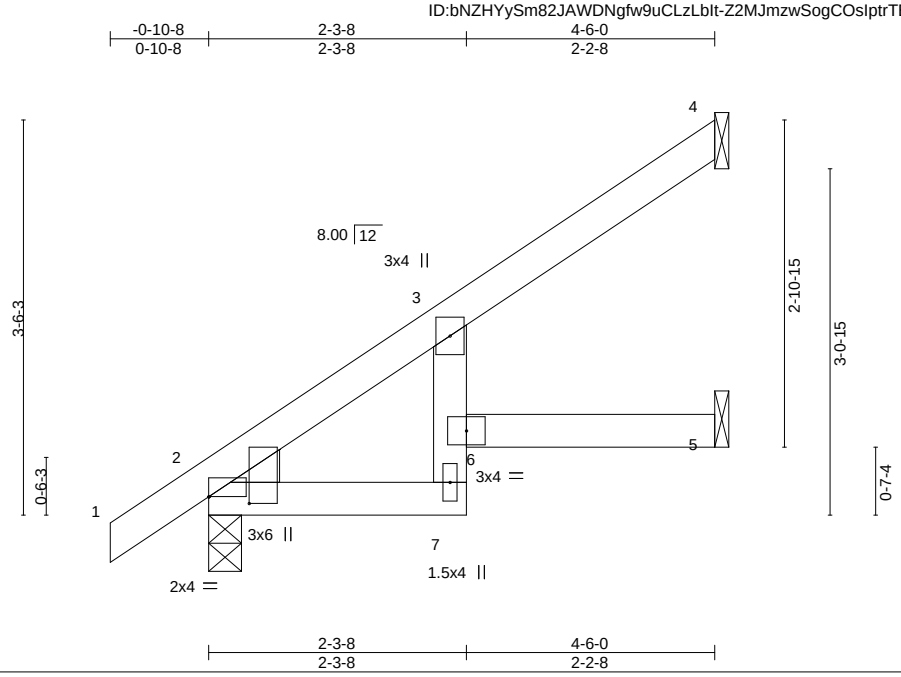

Plate Offsets (X,Y)-- [2:0-0-0,0-0-0], [2:0-0-11,0-4-5]

LOADING (psf)		SPACING- 2-0-0		CSI.		DEFL. in (loc) l/defl L/d					PLATES	GRIP
TCLL	20.0	Plate Grip DOL	1.15	TC	0.17	Vert(LL)	0.02	5-6	>999	240	MT20	197/144
TCDL	10.0	Lumber DOL	1.15	BC	0.26	Vert(CT)	-0.03	5-6	>999	180		
BCLL	0.0 *	Rep Stress Incr	YES	WB	0.00	Horz(CT)	0.01	5	n/a	n/a		
BCDL	10.0	Code IRC2018/TPI2014		Matrix-R							Weight: 19 lb	FT = 20%

LUMBER-
TOP CHORD 2x4 SP No.2 or 2x4 SPF No.2
BOT CHORD 2x4 SP No.2 or 2x4 SPF No.2 *Except*
3-7: 2x4 SP No.3
WEDGE
Left: 2x4 SP No.3

BRACING-
TOP CHORD Structural wood sheathing directly applied or 4-6-0 oc purlins.
BOT CHORD Rigid ceiling directly applied or 10-0-0 oc bracing.

REACTIONS. (size) 4=Mechanical, 2=0-3-8, 5=Mechanical
Max Horz 2=92(LC 12)
Max Uplift 4=-28(LC 12), 2=-2(LC 12)
Max Grav 4=94(LC 17), 2=240(LC 1), 5=77(LC 3)

FORCES. (lb) - Max. Comp./Max. Ten. - All forces 250 (lb) or less except when shown.

NOTES-
1) Wind: ASCE 7-16; Vult=120mph (3-second gust) Vasd=95mph; TCDL=6.0psf; BCDL=6.0psf; h=25ft; B=45ft; L=24ft; eave=4ft; Cat. II; Exp B; Enclosed; MWFRS (directional) and C-C Exterior(2E) -0-10-8 to 2-1-12, Interior(1) 2-1-12 to 4-5-4 zone; cantilever left and right exposed ; end vertical left and right exposed;C-C for members and forces & MWFRS for reactions shown; Lumber DOL=1.60 plate grip DOL=1.60
2) This truss has been designed for a 10.0 psf bottom chord live load nonconcurrent with any other live loads.
3) * This truss has been designed for a live load of 20.0psf on the bottom chord in all areas where a rectangle 3-6-0 tall by 2-0-0 wide will fit between the bottom chord and any other members.
4) Refer to girder(s) for truss to truss connections.
5) Provide mechanical connection (by others) of truss to bearing plate capable of withstanding 100 lb uplift at joint(s) 4.
6) One H2.5A Simpson Strong-Tie connectors recommended to connect truss to bearing walls due to UPLIFT at jt(s) 2. This connection is for uplift only and does not consider lateral forces.
7) This truss is designed in accordance with the 2018 International Residential Code sections R502.11.1 and R802.10.2 and referenced standard ANSI/TPI 1.

October 27,2021

WARNING - Verify design parameters and READ NOTES ON THIS AND INCLUDED MITEK REFERENCE PAGE MII-7473 rev. 5/19/2020 BEFORE USE.
Design valid for use only with MiTek® connectors. This design is based only upon parameters shown, and is for an individual building component, not a truss system. Before use, the building designer must verify the applicability of design parameters and properly incorporate this design into the overall building design. Bracing indicated is to prevent buckling of individual truss web and/or chord members only. Additional temporary and permanent bracing is always required for stability and to prevent collapse with possible personal injury and property damage. For general guidance regarding the fabrication, storage, delivery, erection and bracing of trusses and truss systems, see **ANSI/TPI1 Quality Criteria, DSB-89 and BCSI Building Component Safety Information** available from Truss Plate Institute, 2670 Crain Highway, Suite 203 Waldorf, MD 20601

ENGINEERING BY TRENCO A MiTek Affiliate
818 Soundside Road
Edenton, NC 27932

Job	Truss	Truss Type	Qty	Ply	KB Home 149.2115.C Vol ceiling and tray
149_2115_C_VO_T	J1V	Jack-Open	7	1	I48539513 Job Reference (optional)

84 Components (Dunn), Dunn, NC - 28334, 8.520 s Aug 27 2021 MiTek Industries, Inc. Wed Oct 27 08:08:02 2021 Page 1
ID:bNZHYySm82JAWDNgfw9uCLzLbIt-1FwhzJw4Z_LFURO3PBiF?Fgmnfmh9uxxGU3wU?yPGrB

-0-10-8 4-6-0
0-10-8 4-6-0

Scale = 1:20.5

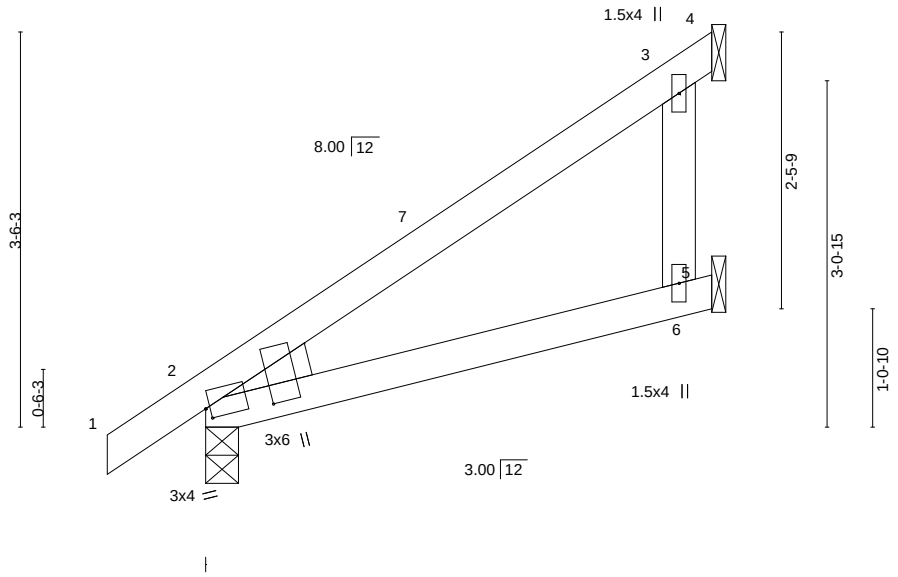

Plate Offsets (X,Y)-- [2:0-0-8,0-1-2], [2:0-1-4,0-7-2]

LOADING (psf)		SPACING- 2-0-0		CSI.		DEFL. in (loc) l/defl L/d		PLATES	GRIP
TCLL	20.0	Plate Grip DOL	1.15	TC	0.26	Vert(LL) -0.02 2-6 >999 240		MT20	197/144
TCDL	10.0	Lumber DOL	1.15	BC	0.20	Vert(CT) -0.04 2-6 >999 180			
BCLL	0.0 *	Rep Stress Incr	YES	WB	0.11	Horz(CT) -0.00 4 n/a n/a			
BCDL	10.0	Code IRC2018/TPI2014		Matrix-P				Weight: 21 lb	FT = 20%

LUMBER-
TOP CHORD 2x4 SP No.2 or 2x4 SPF No.2
BOT CHORD 2x4 SP No.2 or 2x4 SPF No.2
WEBS 2x4 SP No.3
WEDGE
Left: 2x4 SP No.3

BRACING-
TOP CHORD Structural wood sheathing directly applied or 4-6-0 oc purlins.
BOT CHORD Rigid ceiling directly applied or 6-0-0 oc bracing.

REACTIONS. (size) 4=Mechanical, 2=0-3-8, 5=Mechanical
Max Horz 2=92(LC 12)
Max Uplift 4=-75(LC 17), 2=-1(LC 12), 5=-146(LC 12)
Max Grav 4=121(LC 3), 2=240(LC 1), 5=240(LC 17)

FORCES. (lb) - Max. Comp./Max. Ten. - All forces 250 (lb) or less except when shown.
WEBS 3-6=-208/359

NOTES-
1) Wind: ASCE 7-16; Vult=120mph (3-second gust) Vasd=95mph; TCDL=6.0psf; BCDL=6.0psf; h=25ft; B=45ft; L=24ft; eave=4ft; Cat. II; Exp B; Enclosed; MWFRS (directional) and C-C Exterior(2E) -0-10-8 to 2-1-8, Interior(1) 2-1-8 to 4-5-4 zone;C-C for members and forces & MWFRS for reactions shown; Lumber DOL=1.60 plate grip DOL=1.60
2) This truss has been designed for a 10.0 psf bottom chord live load nonconcurrent with any other live loads.
3) * This truss has been designed for a live load of 20.0psf on the bottom chord in all areas where a rectangle 3-6-0 tall by 2-0-0 wide will fit between the bottom chord and any other members.
4) Refer to girder(s) for truss to truss connections.
5) Bearing at joint(s) 2 considers parallel to grain value using ANSI/TPI 1 angle to grain formula. Building designer should verify capacity of bearing surface.
6) Provide mechanical connection (by others) of truss to bearing plate capable of withstanding 100 lb uplift at joint(s) 4 except (jt=lb) 5=146.
7) One H2.5A Simpson Strong-Tie connectors recommended to connect truss to bearing walls due to UPLIFT at jt(s) 2. This connection is for uplift only and does not consider lateral forces.
8) This truss is designed in accordance with the 2018 International Residential Code sections R502.11.1 and R802.10.2 and referenced standard ANSI/TPI 1.

October 27,2021

WARNING - Verify design parameters and READ NOTES ON THIS AND INCLUDED MITEK REFERENCE PAGE MII-7473 rev. 5/19/2020 BEFORE USE.
Design valid for use only with MiTek® connectors. This design is based only upon parameters shown, and is for an individual building component, not a truss system. Before use, the building designer must verify the applicability of design parameters and properly incorporate this design into the overall building design. Bracing indicated is to prevent buckling of individual truss web and/or chord members only. Additional temporary and permanent bracing is always required for stability and to prevent collapse with possible personal injury and property damage. For general guidance regarding the fabrication, storage, delivery, erection and bracing of trusses and truss systems, see **ANSI/TPI1 Quality Criteria, DSB-89 and BCSI Building Component Safety Information** available from Truss Plate Institute, 2670 Crain Highway, Suite 203 Waldorf, MD 20601

ENGINEERING BY TRENCO A MiTek Affiliate
818 Soundside Road
Edenton, NC 27932

Job	Truss	Truss Type	Qty	Ply	KB Home 149.2115.C Vol ceiling and tray
149_2115_C_VO_T	J2V	Jack-Open	1	1	I48539514 Job Reference (optional)

84 Components (Dunn), Dunn, NC - 28334, 8.520 s Aug 27 2021 MiTek Industries, Inc. Wed Oct 27 08:08:03 2021 Page 1

ID:bNZHYySm82JAWDNgfw9uCLzLbIt-VRU4AfxjKIT66bzGzuDUYTDxl36guMr4V8oT0SyPGrA

-0-10-8 4-3-0 4-6-0
0-10-8 4-3-0 0-3-0

Scale = 1:19.6

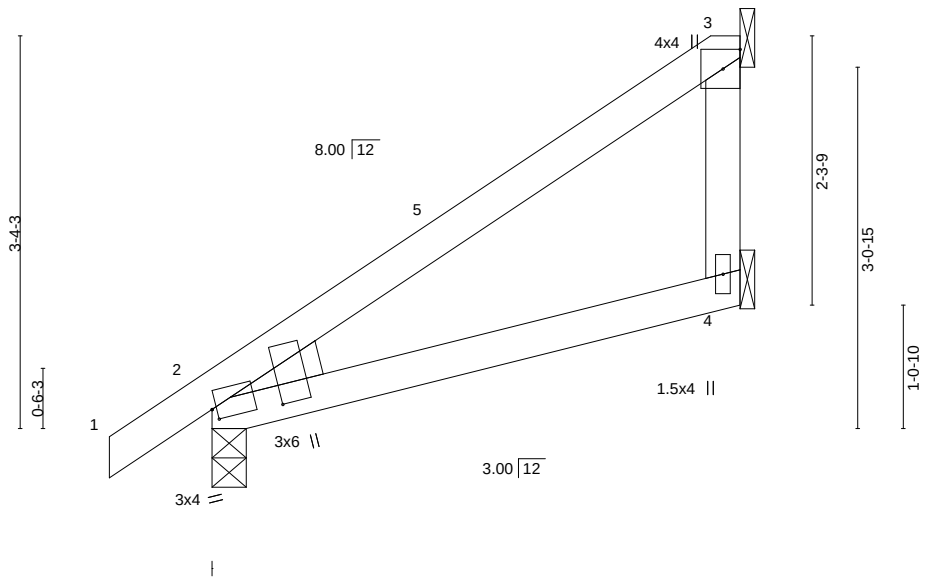

Plate Offsets (X,Y)-- [2:0-0-8,0-1-2], [2:0-1-4,0-7-2]

LOADING (psf)		SPACING- 2-0-0		CSI.		DEFL. in (loc) l/defl L/d					PLATES	GRIP
TCLL	20.0	Plate Grip DOL	1.15	TC	0.31	Vert(LL)	-0.02	2-4	>999	240	MT20	197/144
TCDL	10.0	Lumber DOL	1.15	BC	0.22	Vert(CT)	-0.04	2-4	>999	180		
BCLL	0.0 *	Rep Stress Incr	YES	WB	0.00	Horz(CT)	-0.00	3	n/a	n/a		
BCDL	10.0	Code IRC2018/TPI2014		Matrix-P							Weight: 21 lb	FT = 20%

LUMBER-
TOP CHORD 2x4 SP No.2 or 2x4 SPF No.2
BOT CHORD 2x4 SP No.2 or 2x4 SPF No.2
WEBS 2x4 SP No.2 or 2x4 SPF No.2
WEDGE
Left: 2x4 SP No.3

BRACING-
TOP CHORD Structural wood sheathing directly applied or 4-6-0 oc purlins, except end verticals.
BOT CHORD Rigid ceiling directly applied or 10-0-0 oc bracing.

REACTIONS. (size) 4=Mechanical, 2=0-3-8, 3=Mechanical
Max Horz 2=90(LC 12)
Max Uplift 2=-2(LC 12), 3=-51(LC 12)
Max Grav 4=84(LC 3), 2=237(LC 1), 3=120(LC 17)

FORCES. (lb) - Max. Comp./Max. Ten. - All forces 250 (lb) or less except when shown.

NOTES-
1) Wind: ASCE 7-16; Vult=120mph (3-second gust) Vasd=95mph; TCDL=6.0psf; BCDL=6.0psf; h=25ft; B=45ft; L=24ft; eave=4ft; Cat. II; Exp B; Enclosed; MWFRS (directional) and C-C Exterior(2E) -0-10-8 to 2-1-8, Interior(1) 2-1-8 to 4-4-4 zone;C-C for members and forces & MWFRS for reactions shown; Lumber DOL=1.60 plate grip DOL=1.60
2) This truss has been designed for a 10.0 psf bottom chord live load nonconcurrent with any other live loads.
3) * This truss has been designed for a live load of 20.0psf on the bottom chord in all areas where a rectangle 3-6-0 tall by 2-0-0 wide will fit between the bottom chord and any other members.
4) Refer to girder(s) for truss to truss connections.
5) Bearing at joint(s) 2 considers parallel to grain value using ANSI/TPI 1 angle to grain formula. Building designer should verify capacity of bearing surface.
6) Provide mechanical connection (by others) of truss to bearing plate capable of withstanding 100 lb uplift at joint(s) 3.
7) One H2.5A Simpson Strong-Tie connectors recommended to connect truss to bearing walls due to UPLIFT at jt(s) 2. This connection is for uplift only and does not consider lateral forces.
8) This truss is designed in accordance with the 2018 International Residential Code sections R502.11.1 and R802.10.2 and referenced standard ANSI/TPI 1.
9) Gap between inside of top chord bearing and first diagonal or vertical web shall not exceed 0.500in.

October 27,2021

WARNING - Verify design parameters and READ NOTES ON THIS AND INCLUDED MITEK REFERENCE PAGE MII-7473 rev. 5/19/2020 BEFORE USE.
Design valid for use only with MiTek® connectors. This design is based only upon parameters shown, and is for an individual building component, not a truss system. Before use, the building designer must verify the applicability of design parameters and properly incorporate this design into the overall building design. Bracing indicated is to prevent buckling of individual truss web and/or chord members only. Additional temporary and permanent bracing is always required for stability and to prevent collapse with possible personal injury and property damage. For general guidance regarding the fabrication, storage, delivery, erection and bracing of trusses and truss systems, see **ANSI/TPI1 Quality Criteria, DSB-89 and BCSI Building Component Safety Information** available from Truss Plate Institute, 2670 Crain Highway, Suite 203 Waldorf, MD 20601

ENGINEERING BY TRENCO A MiTek Affiliate
818 Soundside Road
Edenton, NC 27932

Job	Truss	Truss Type	Qty	Ply	KB Home 149.2115.C Vol ceiling and tray
149_2115_C_VO_T	J3V	Jack-Open	1	1	I48539515 Job Reference (optional)

84 Components (Dunn), Dunn, NC - 28334, 8.520 s Aug 27 2021 MiTek Industries, Inc. Wed Oct 27 08:08:04 2021 Page 1
ID:bNZHYySm82JAWDNgfw9uCLzLbIt-_d2SO?yL5bbzjlYSXckj4gl8STSTdplEkoY1YuyPGr9

Scale = 1:14.5

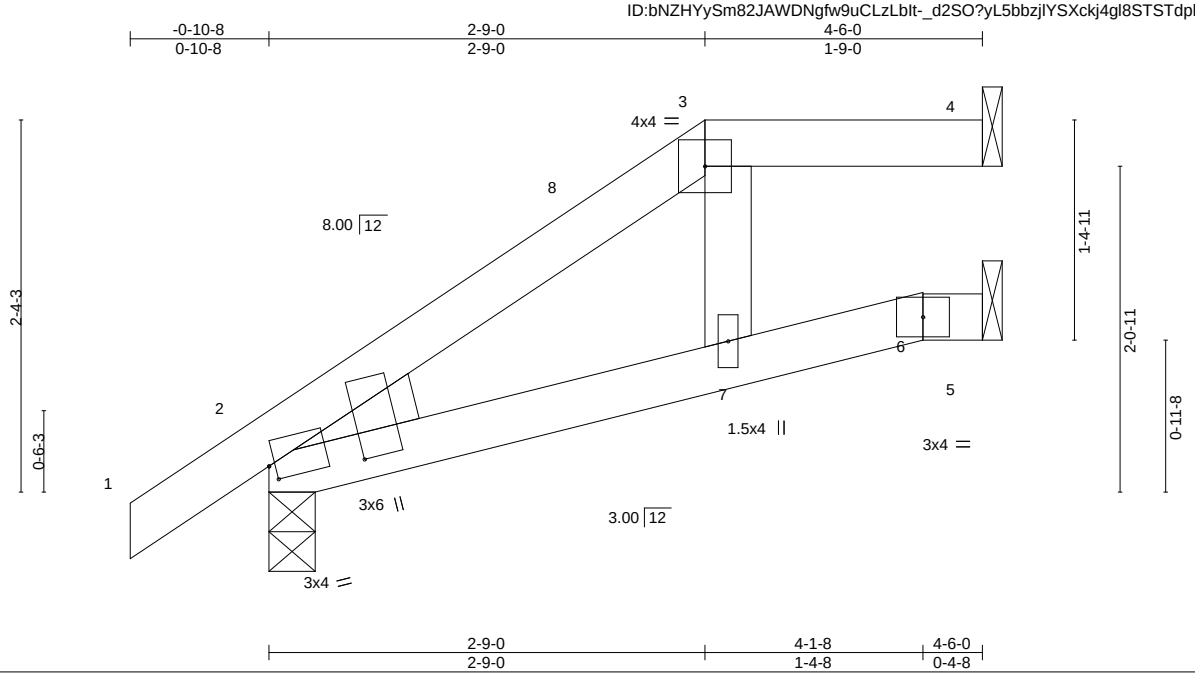

Plate Offsets (X,Y)-- [2:0-0-8,0-1-2], [2:0-1-4,0-7-2]

LOADING (psf)		SPACING- 2-0-0		CSI.		DEFL. in (loc) l/defl L/d					PLATES	GRIP
TCLL	20.0	Plate Grip DOL	1.15	TC	0.18	Vert(LL)	-0.02	2-7	>999	240	MT20	197/144
TCDL	10.0	Lumber DOL	1.15	BC	0.24	Vert(CT)	-0.04	2-7	>999	180		
BCLL	0.0 *	Rep Stress Incr	YES	WB	0.02	Horz(CT)	0.03	4	n/a	n/a		
BCDL	10.0	Code IRC2018/TPI2014		Matrix-P							Weight: 19 lb	FT = 20%

LUMBER-
TOP CHORD 2x4 SP No.2 or 2x4 SPF No.2
BOT CHORD 2x4 SP No.2 or 2x4 SPF No.2
WEBS 2x4 SP No.3
WEDGE
Left: 2x4 SP No.3

BRACING-
TOP CHORD Structural wood sheathing directly applied or 4-6-0 oc purlins, except 2-0-0 oc purlins: 3-4.
BOT CHORD Rigid ceiling directly applied or 6-0-0 oc bracing.

REACTIONS. (size) 4=Mechanical, 2=0-3-8, 5=Mechanical
Max Horz 2=65(LC 12)
Max Uplift 4=-15(LC 9), 2=-18(LC 12), 5=-1(LC 12)
Max Grav 4=85(LC 1), 2=240(LC 1), 5=80(LC 1)

FORCES. (lb) - Max. Comp./Max. Ten. - All forces 250 (lb) or less except when shown.

NOTES-
1) Unbalanced roof live loads have been considered for this design.
2) Wind: ASCE 7-16; Vult=120mph (3-second gust) Vasd=95mph; TCDL=6.0psf; BCDL=6.0psf; h=25ft; B=45ft; L=24ft; eave=4ft; Cat. II; Exp B; Enclosed; MWFRS (directional) and C-C Exterior(2E) -0-10-8 to 2-1-8, Interior(1) 2-1-8 to 2-9-0, Exterior(2E) 2-9-0 to 4-5-4 zone;C-C for members and forces & MWFRS for reactions shown; Lumber DOL=1.60 plate grip DOL=1.60
3) Provide adequate drainage to prevent water ponding.
4) This truss has been designed for a 10.0 psf bottom chord live load nonconcurrent with any other live loads.
5) * This truss has been designed for a live load of 20.0psf on the bottom chord in all areas where a rectangle 3-6-0 tall by 2-0-0 wide will fit between the bottom chord and any other members.
6) Refer to girder(s) for truss to truss connections.
7) Bearing at joint(s) 2 considers parallel to grain value using ANSI/TPI 1 angle to grain formula. Building designer should verify capacity of bearing surface.
8) Provide mechanical connection (by others) of truss to bearing plate capable of withstanding 100 lb uplift at joint(s) 4.
9) One MTS12 Simpson Strong-Tie connectors recommended to connect truss to bearing walls due to UPLIFT at jt(s) 5. This connection is for uplift only and does not consider lateral forces.
10) One H2.5A Simpson Strong-Tie connectors recommended to connect truss to bearing walls due to UPLIFT at jt(s) 2. This connection is for uplift only and does not consider lateral forces.
11) This truss is designed in accordance with the 2018 International Residential Code sections R502.11.1 and R802.10.2 and referenced standard ANSI/TPI 1.
12) Graphical purlin representation does not depict the size or the orientation of the purlin along the top and/or bottom chord.

October 27,2021

WARNING - Verify design parameters and READ NOTES ON THIS AND INCLUDED MITEK REFERENCE PAGE MII-7473 rev. 5/19/2020 BEFORE USE.
Design valid for use only with MiTek® connectors. This design is based only upon parameters shown, and is for an individual building component, not a truss system. Before use, the building designer must verify the applicability of design parameters and properly incorporate this design into the overall building design. Bracing indicated is to prevent buckling of individual truss web and/or chord members only. Additional temporary and permanent bracing is always required for stability and to prevent collapse with possible personal injury and property damage. For general guidance regarding the fabrication, storage, delivery, erection and bracing of trusses and truss systems, see **ANSI/TPI1 Quality Criteria, DSB-89 and BCSI Building Component Safety Information** available from Truss Plate Institute, 2670 Crain Highway, Suite 203 Waldorf, MD 20601

ENGINEERING BY TRENCO A MiTek Affiliate
818 Soundside Road
Edenton, NC 27932

Job	Truss	Truss Type	Qty	Ply	KB Home 149.2115.C Vol ceiling and tray
149_2115_C_VO_T	J4	Jack-Open Girder	1	1	I48539516 Job Reference (optional)

84 Components (Dunn), Dunn, NC - 28334, 8.520 s Aug 27 2021 MiTek Industries, Inc. Wed Oct 27 08:08:05 2021 Page 1
ID:bNZHYySm82JAWDNgfw9uCLzLbIt-SpbqbLzzsvjqLv6e4JFydulHutoZMGLNySHa4KyPGr8

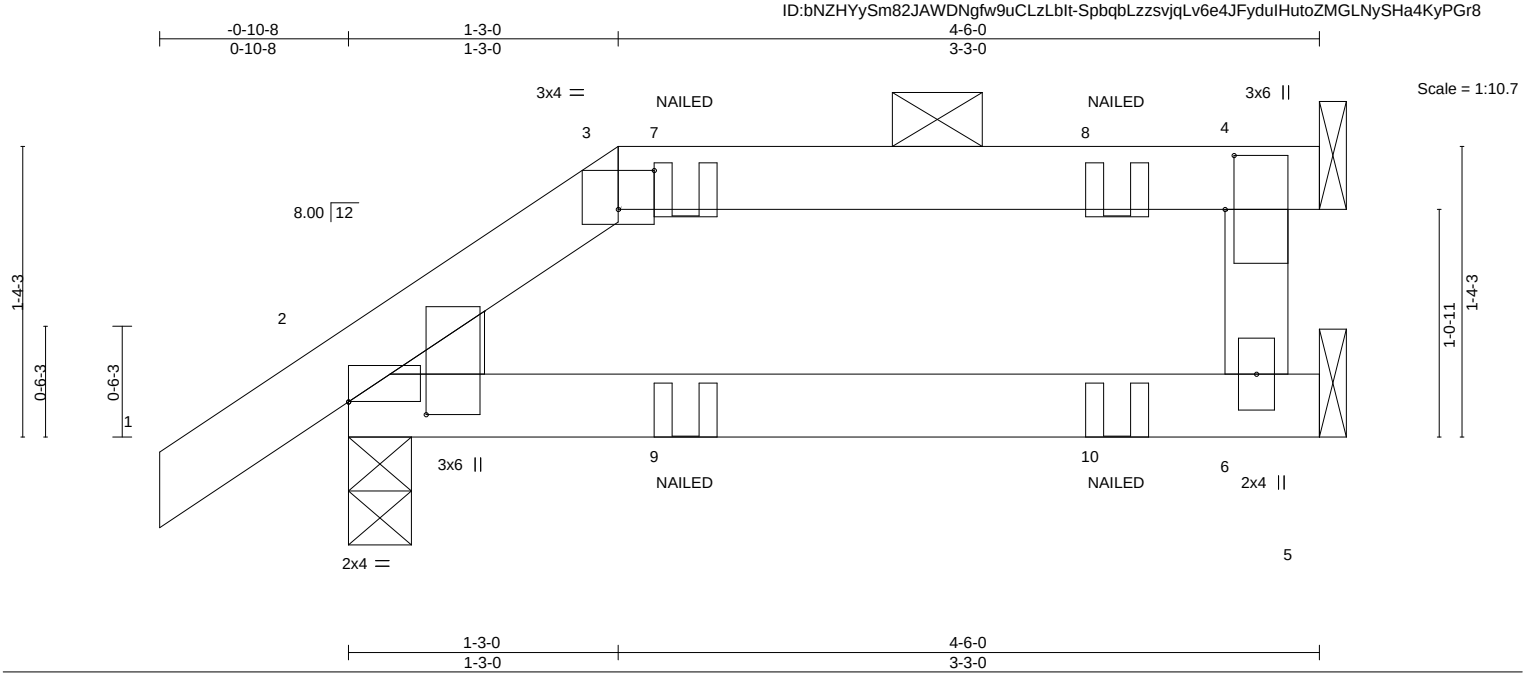

Plate Offsets (X,Y)-- [2:0-0-11,0-4-5], [2:0-0-0,0-0-0], [3:0-2-0,0-2-3], [4:0-3-0,0-0-8]

LOADING (psf)		**SPACING-** 2-0-0	**CSI.**		**DEFL.**	in	(loc)	l/defl	L/d	**PLATES**	**GRIP**
TCLL	20.0	Plate Grip DOL 1.15	TC	0.27	Vert(LL)	-0.01	2-6	>999	240	MT20	197/144
TCDL	10.0	Lumber DOL 1.15	BC	0.19	Vert(CT)	-0.03	2-6	>999	180		
BCLL	0.0 *	Rep Stress Incr NO	WB	0.00	Horz(CT)	0.02	4	n/a	n/a		
BCDL	10.0	Code IRC2018/TPI2014	Matrix-P							Weight: 17 lb	FT = 20%

LUMBER-
TOP CHORD 2x4 SP No.2 or 2x4 SPF No.2
BOT CHORD 2x4 SP No.2 or 2x4 SPF No.2
WEBS 2x4 SP No.3
WEDGE
Left: 2x4 SP No.3

BRACING-
TOP CHORD Structural wood sheathing directly applied or 4-6-0 oc purlins, except 2-0-0 oc purlins: 3-4.
BOT CHORD Rigid ceiling directly applied or 10-0-0 oc bracing.

REACTIONS. (size) 2=0-3-8, 4=Mechanical, 6=Mechanical
Max Horz 2=40(LC 8)
Max Uplift 2=-28(LC 8), 4=-35(LC 5)
Max Grav 2=231(LC 1), 4=108(LC 1), 6=88(LC 3)

FORCES. (lb) - Max. Comp./Max. Ten. - All forces 250 (lb) or less except when shown.

NOTES-
1) Unbalanced roof live loads have been considered for this design.
2) Wind: ASCE 7-16; Vult=120mph (3-second gust) Vasd=95mph; TCDL=6.0psf; BCDL=6.0psf; h=25ft; B=45ft; L=24ft; eave=4ft; Cat. II; Exp B; Enclosed; MWFRS (directional); Lumber DOL=1.60 plate grip DOL=1.60
3) Provide adequate drainage to prevent water ponding.
4) This truss has been designed for a 10.0 psf bottom chord live load nonconcurrent with any other live loads.
5) * This truss has been designed for a live load of 20.0psf on the bottom chord in all areas where a rectangle 3-6-0 tall by 2-0-0 wide will fit between the bottom chord and any other members.
6) Refer to girder(s) for truss to truss connections.
7) Provide mechanical connection (by others) of truss to bearing plate capable of withstanding 100 lb uplift at joint(s) 4.
8) One H2.5A Simpson Strong-Tie connectors recommended to connect truss to bearing walls due to UPLIFT at jt(s) 2. This connection is for uplift only and does not consider lateral forces.
9) One MTS12 Simpson Strong-Tie connectors recommended to connect truss to bearing walls due to UPLIFT at jt(s) 6. This connection is for uplift only and does not consider lateral forces.
10) This truss is designed in accordance with the 2018 International Residential Code sections R502.11.1 and R802.10.2 and referenced standard ANSI/TPI 1.
11) Graphical purlin representation does not depict the size or the orientation of the purlin along the top and/or bottom chord.
12) Gap between inside of top chord bearing and first diagonal or vertical web shall not exceed 0.500in.
13) "NAILED" indicates 3-10d (0.148"x3") or 3-12d (0.148"x3.25") toe-nails per NDS guidlines.
14) In the LOAD CASE(S) section, loads applied to the face of the truss are noted as front (F) or back (B).

LOAD CASE(S) Standard
1) Dead + Roof Live (balanced): Lumber Increase=1.15, Plate Increase=1.15
Uniform Loads (plf)
Vert: 1-3=-60, 3-4=-60, 2-5=-20

October 27,2021

Continued on page 2

WARNING - Verify design parameters and READ NOTES ON THIS AND INCLUDED MITEK REFERENCE PAGE MII-7473 rev. 5/19/2020 BEFORE USE.
Design valid for use only with MiTek® connectors. This design is based only upon parameters shown, and is for an individual building component, not a truss system. Before use, the building designer must verify the applicability of design parameters and properly incorporate this design into the overall building design. Bracing indicated is to prevent buckling of individual truss web and/or chord members only. Additional temporary and permanent bracing is always required for stability and to prevent collapse with possible personal injury and property damage. For general guidance regarding the fabrication, storage, delivery, erection and bracing of trusses and truss systems, see **ANSI/TPI1 Quality Criteria, DSB-89 and BCSI Building Component Safety Information** available from Truss Plate Institute, 2670 Crain Highway, Suite 203 Waldorf, MD 20601

ENGINEERING BY TRENCO A MiTek Affiliate
818 Soundside Road
Edenton, NC 27932

LOAD CASE(S) Standard
Concentrated Loads (lb)
Vert: 10=-0(B)

WARNING - Verify design parameters and READ NOTES ON THIS AND INCLUDED MITEK REFERENCE PAGE MII-7473 rev. 5/19/2020 BEFORE USE.
Design valid for use only with MiTek® connectors. This design is based only upon parameters shown, and is for an individual building component, not a truss system. Before use, the building designer must verify the applicability of design parameters and properly incorporate this design into the overall building design. Bracing indicated is to prevent buckling of individual truss web and/or chord members only. Additional temporary and permanent bracing is always required for stability and to prevent collapse with possible personal injury and property damage. For general guidance regarding the fabrication, storage, delivery, erection and bracing of trusses and truss systems, see **ANSI/TPI1 Quality Criteria, DSB-89 and BCSI Building Component Safety Information** available from Truss Plate Institute, 2670 Crain Highway, Suite 203 Waldorf, MD 20601

ENGINEERING BY TRENCO A MiTek Affiliate
818 Soundside Road
Edenton, NC 27932

Job	Truss	Truss Type	Qty	Ply	KB Home 149.2115.C Vol ceiling and tray
149_2115_C_VO_T	J4V	Jack-Open Girder	1	1	I48539517 Job Reference (optional)

84 Components (Dunn), Dunn, NC - 28334, 8.520 s Aug 27 2021 MiTek Industries, Inc. Wed Oct 27 08:08:06 2021 Page 1
ID:bNZHYySm82JAWDNgfw9uCLzLbIt-w09CphzbdDrhz3hqe1mB95rTBG6b5jKWB518dmyPGr7

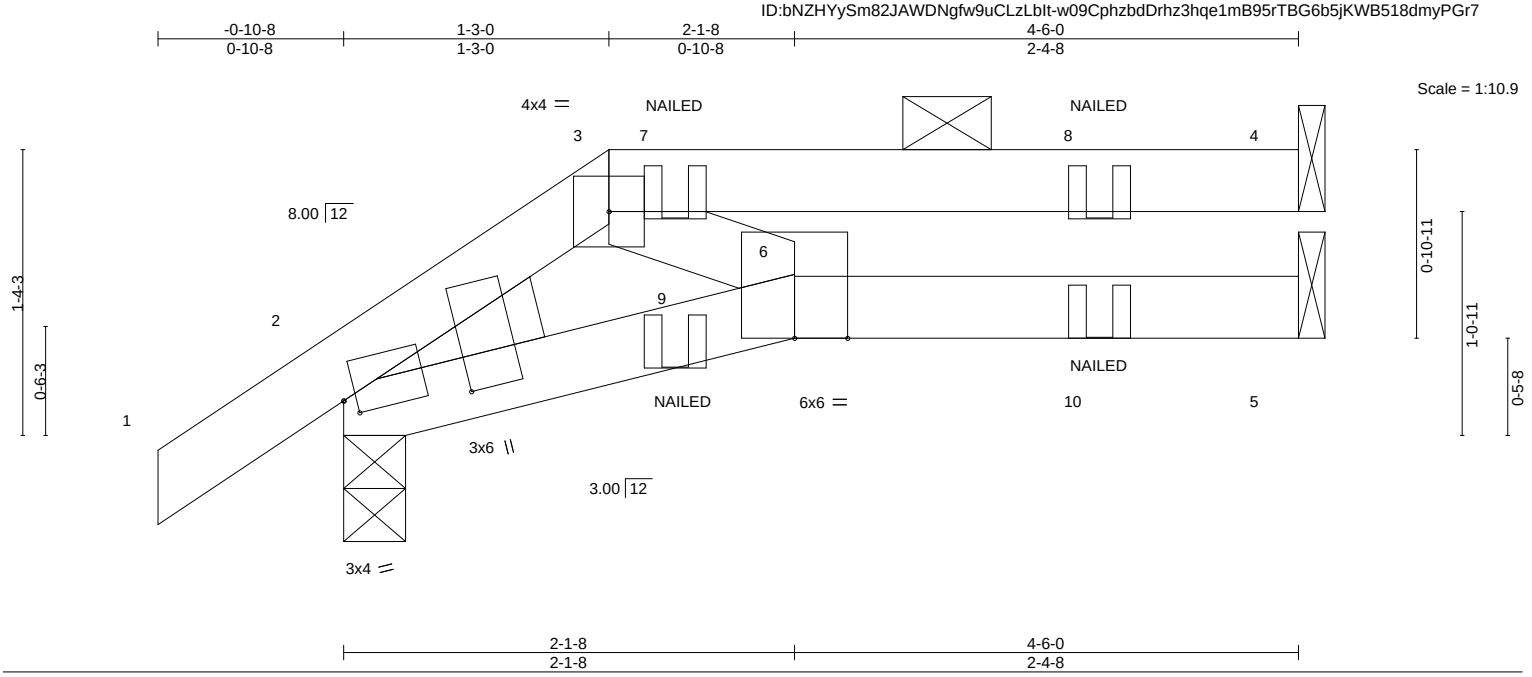

Plate Offsets (X,Y)-- [2:0-0-12,0-0-14], [2:0-1-4,0-7-2]

LOADING (psf)		SPACING- 2-0-0		CSI.		DEFL.	in	(loc)	l/defl	L/d	PLATES	GRIP
TCLL	20.0	Plate Grip DOL	1.15	TC	0.23	Vert(LL)	-0.02	6	>999	240	MT20	197/144
TCDL	10.0	Lumber DOL	1.15	BC	0.27	Vert(CT)	-0.04	6	>999	180		
BCLL	0.0 *	Rep Stress Incr	NO	WB	0.02	Horz(CT)	0.02	4	n/a	n/a		
BCDL	10.0	Code IRC2018/TPI2014		Matrix-P							Weight: 18 lb	FT = 20%

LUMBER-
TOP CHORD 2x4 SP No.2 or 2x4 SPF No.2
BOT CHORD 2x4 SP No.2 or 2x4 SPF No.2
WEBS 2x4 SP No.3
WEDGE
Left: 2x4 SP No.3

BRACING-
TOP CHORD Structural wood sheathing directly applied or 4-6-0 oc purlins, except 2-0-0 oc purlins: 3-4.
BOT CHORD Rigid ceiling directly applied or 6-0-0 oc bracing.

REACTIONS. (size) 4=Mechanical, 2=0-3-8, 5=Mechanical
Max Horz 2=40(LC 8)
Max Uplift 4=-28(LC 5), 2=-28(LC 8)
Max Grav 4=100(LC 20), 2=241(LC 1), 5=82(LC 3)

FORCES. (lb) - Max. Comp./Max. Ten. - All forces 250 (lb) or less except when shown.

NOTES-
1) Unbalanced roof live loads have been considered for this design.
2) Wind: ASCE 7-16; Vult=120mph (3-second gust) Vasd=95mph; TCDL=6.0psf; BCDL=6.0psf; h=25ft; B=45ft; L=24ft; eave=4ft; Cat. II; Exp B; Enclosed; MWFRS (directional); Lumber DOL=1.60 plate grip DOL=1.60
3) Provide adequate drainage to prevent water ponding.
4) This truss has been designed for a 10.0 psf bottom chord live load nonconcurrent with any other live loads.
5) * This truss has been designed for a live load of 20.0psf on the bottom chord in all areas where a rectangle 3-6-0 tall by 2-0-0 wide will fit between the bottom chord and any other members.
6) Refer to girder(s) for truss to truss connections.
7) Bearing at joint(s) 2 considers parallel to grain value using ANSI/TPI 1 angle to grain formula. Building designer should verify capacity of bearing surface.
8) Provide mechanical connection (by others) of truss to bearing plate capable of withstanding 100 lb uplift at joint(s) 4.
9) One MTS12 Simpson Strong-Tie connectors recommended to connect truss to bearing walls due to UPLIFT at jt(s) 5. This connection is for uplift only and does not consider lateral forces.
10) One H2.5A Simpson Strong-Tie connectors recommended to connect truss to bearing walls due to UPLIFT at jt(s) 2. This connection is for uplift only and does not consider lateral forces.
11) This truss is designed in accordance with the 2018 International Residential Code sections R502.11.1 and R802.10.2 and referenced standard ANSI/TPI 1.
12) Graphical purlin representation does not depict the size or the orientation of the purlin along the top and/or bottom chord.
13) "NAILED" indicates 3-10d (0.148"x3") or 3-12d (0.148"x3.25") toe-nails per NDS guidlines.
14) In the LOAD CASE(S) section, loads applied to the face of the truss are noted as front (F) or back (B).

LOAD CASE(S) Standard
1) Dead + Roof Live (balanced): Lumber Increase=1.15, Plate Increase=1.15
Uniform Loads (plf)
Vert: 1-3=-60, 3-4=-60, 2-6=-20, 5-6=-20

October 27,2021

Continued on page 2

WARNING - Verify design parameters and READ NOTES ON THIS AND INCLUDED MITEK REFERENCE PAGE MII-7473 rev. 5/19/2020 BEFORE USE.
Design valid for use only with MiTek® connectors. This design is based only upon parameters shown, and is for an individual building component, not a truss system. Before use, the building designer must verify the applicability of design parameters and properly incorporate this design into the overall building design. Bracing indicated is to prevent buckling of individual truss web and/or chord members only. Additional temporary and permanent bracing is always required for stability and to prevent collapse with possible personal injury and property damage. For general guidance regarding the fabrication, storage, delivery, erection and bracing of trusses and truss systems, see **ANSI/TPI1 Quality Criteria, DSB-89 and BCSI Building Component Safety Information** available from Truss Plate Institute, 2670 Crain Highway, Suite 203 Waldorf, MD 20601

ENGINEERING BY TRENCO A MiTek Affiliate
818 Soundside Road
Edenton, NC 27932

LOAD CASE(S) Standard
Concentrated Loads (lb)
Vert: 9=-1(F) 10=-1(F)

WARNING - Verify design parameters and READ NOTES ON THIS AND INCLUDED MITEK REFERENCE PAGE MII-7473 rev. 5/19/2020 BEFORE USE.
Design valid for use only with MiTek® connectors. This design is based only upon parameters shown, and is for an individual building component, not a truss system. Before use, the building designer must verify the applicability of design parameters and properly incorporate this design into the overall building design. Bracing indicated is to prevent buckling of individual truss web and/or chord members only. Additional temporary and permanent bracing is always required for stability and to prevent collapse with possible personal injury and property damage. For general guidance regarding the fabrication, storage, delivery, erection and bracing of trusses and truss systems, see **ANSI/TPI1 Quality Criteria, DSB-89 and BCSI Building Component Safety Information** available from Truss Plate Institute, 2670 Crain Highway, Suite 203 Waldorf, MD 20601

ENGINEERING BY TRENCO A MiTek Affiliate
818 Soundside Road
Edenton, NC 27932

Job	Truss	Truss Type	Qty	Ply	KB Home 149.2115.C Vol ceiling and tray
149_2115_C_VO_T	J5	Jack-Open	2	1	I48539518 Job Reference (optional)

84 Components (Dunn), Dunn, NC - 28334, 8.520 s Aug 27 2021 MiTek Industries, Inc. Wed Oct 27 08:08:07 2021 Page 1

ID:bNZHYySm82JAWDNgfw9uCLzLbIt-OCja01_DOWzYaDG1CkHQiJNghgWLqArgQlmh9DyPGr6

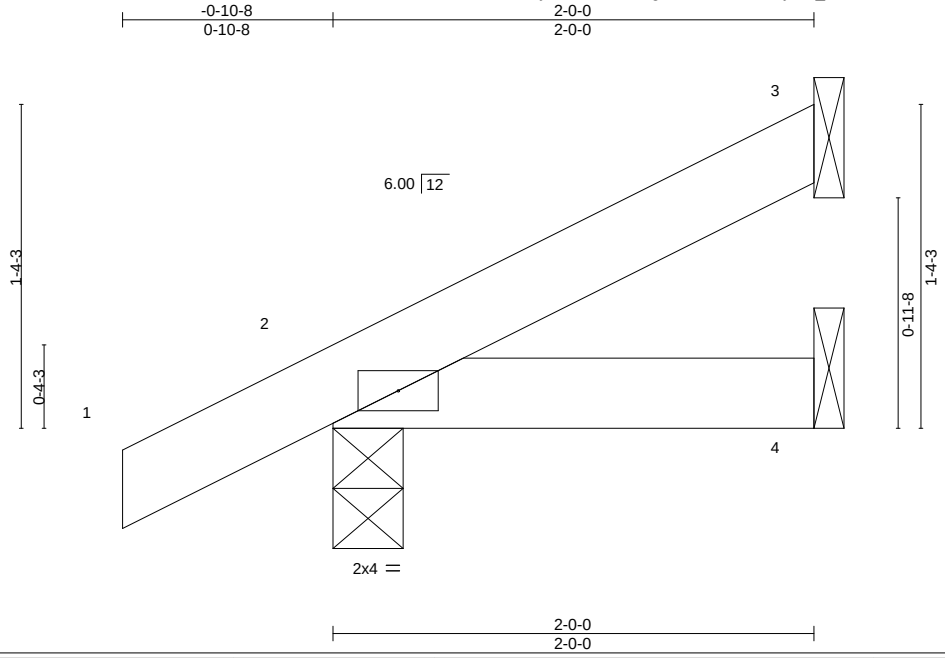

LOADING (psf)			SPACING- 2-0-0		CSI.		DEFL.	in	(loc)	l/defl	L/d	PLATES	GRIP
TCLL	20.0		Plate Grip DOL	1.15	TC	0.06	Vert(LL)	-0.00	2	>999	240	MT20	197/144
TCDL	10.0		Lumber DOL	1.15	BC	0.04	Vert(CT)	-0.00	2-4	>999	180		
BCLL	0.0	*	Rep Stress Incr	YES	WB	0.00	Horz(CT)	-0.00	3	n/a	n/a		
BCDL	10.0		Code IRC2018/TPI2014		Matrix-P							Weight: 8 lb	FT = 20%

LUMBER-
TOP CHORD 2x4 SP No.2 or 2x4 SPF No.2
BOT CHORD 2x4 SP No.2 or 2x4 SPF No.2

BRACING-
TOP CHORD Structural wood sheathing directly applied or 2-0-0 oc purlins.
BOT CHORD Rigid ceiling directly applied or 10-0-0 oc bracing.

REACTIONS. (size) 3=Mechanical, 2=0-3-8, 4=Mechanical
Max Horz 2=40(LC 12)
Max Uplift 3=-12(LC 12), 2=-23(LC 12)
Max Grav 3=46(LC 1), 2=145(LC 1), 4=39(LC 3)

FORCES. (lb) - Max. Comp./Max. Ten. - All forces 250 (lb) or less except when shown.

NOTES-
1) Wind: ASCE 7-16; Vult=120mph (3-second gust) Vasd=95mph; TCDL=6.0psf; BCDL=6.0psf; h=25ft; B=45ft; L=24ft; eave=4ft; Cat. II; Exp B; Enclosed; MWFRS (directional) and C-C Exterior(2E) zone;C-C for members and forces & MWFRS for reactions shown; Lumber DOL=1.60 plate grip DOL=1.60
2) This truss has been designed for a 10.0 psf bottom chord live load nonconcurrent with any other live loads.
3) * This truss has been designed for a live load of 20.0psf on the bottom chord in all areas where a rectangle 3-6-0 tall by 2-0-0 wide will fit between the bottom chord and any other members.
4) Refer to girder(s) for truss to truss connections.
5) Provide mechanical connection (by others) of truss to bearing plate capable of withstanding 100 lb uplift at joint(s) 3.
6) One H2.5A Simpson Strong-Tie connectors recommended to connect truss to bearing walls due to UPLIFT at jt(s) 2. This connection is for uplift only and does not consider lateral forces.
7) This truss is designed in accordance with the 2018 International Residential Code sections R502.11.1 and R802.10.2 and referenced standard ANSI/TPI 1.

October 27,2021

WARNING - Verify design parameters and READ NOTES ON THIS AND INCLUDED MITEK REFERENCE PAGE MII-7473 rev. 5/19/2020 BEFORE USE.
Design valid for use only with MiTek® connectors. This design is based only upon parameters shown, and is for an individual building component, not a truss system. Before use, the building designer must verify the applicability of design parameters and properly incorporate this design into the overall building design. Bracing indicated is to prevent buckling of individual truss web and/or chord members only. Additional temporary and permanent bracing is always required for stability and to prevent collapse with possible personal injury and property damage. For general guidance regarding the fabrication, storage, delivery, erection and bracing of trusses and truss systems, see **ANSI/TPI1 Quality Criteria, DSB-89 and BCSI Building Component Safety Information** available from Truss Plate Institute, 2670 Crain Highway, Suite 203 Waldorf, MD 20601

ENGINEERING BY TRENCO A MiTek Affiliate
818 Soundside Road
Edenton, NC 27932

Job	Truss	Truss Type	Qty	Ply	KB Home 149.2115.C Vol ceiling and tray
149_2115_C_VO_T	J5V	Jack-Open	1	1	I48539519 Job Reference (optional)

84 Components (Dunn), Dunn, NC - 28334, 8.520 s Aug 27 2021 MiTek Industries, Inc. Wed Oct 27 08:08:07 2021 Page 1
ID:bNZHYySm82JAWDNgfw9uCLzLbIt-OCja01_DOWzYaDG1CkHQiJNghgWKqArgQlmh9DyPGr6

-0-10-8 / 0-10-8 | 2-0-0 / 2-0-0

Scale = 1:9.6

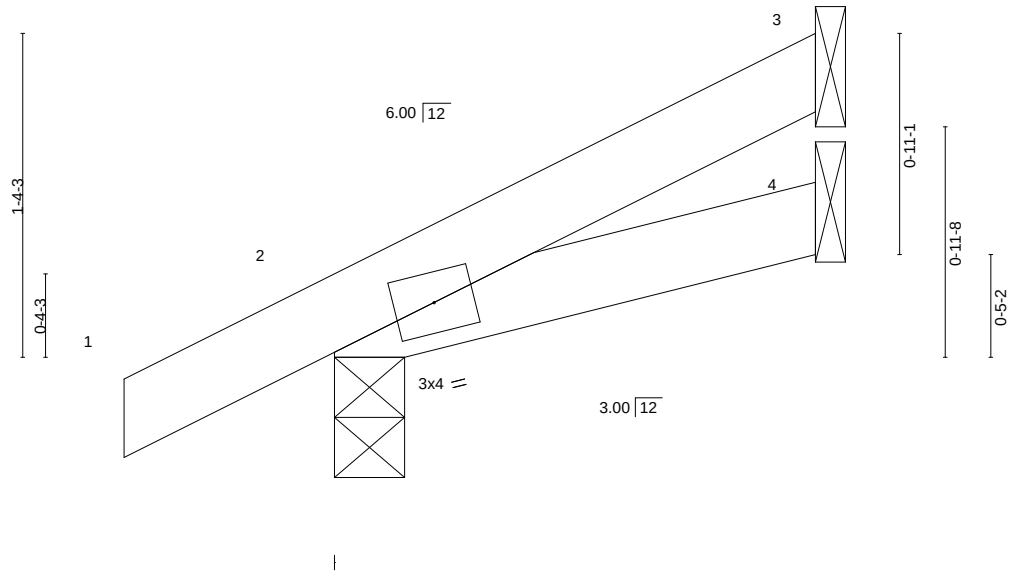

LOADING (psf)			SPACING- 2-0-0		CSI.		DEFL.	in	(loc)	l/defl	L/d	PLATES	GRIP
TCLL	20.0		Plate Grip DOL	1.15	TC	0.06	Vert(LL)	-0.00	2	>999	240	MT20	197/144
TCDL	10.0		Lumber DOL	1.15	BC	0.04	Vert(CT)	-0.00	2-4	>999	180		
BCLL	0.0	*	Rep Stress Incr	YES	WB	0.00	Horz(CT)	-0.00	3	n/a	n/a		
BCDL	10.0		Code IRC2018/TPI2014		Matrix-P							Weight: 8 lb	FT = 20%

LUMBER-
TOP CHORD 2x4 SP No.2 or 2x4 SPF No.2
BOT CHORD 2x4 SP No.2 or 2x4 SPF No.2

BRACING-
TOP CHORD Structural wood sheathing directly applied or 2-0-0 oc purlins.
BOT CHORD Rigid ceiling directly applied or 10-0-0 oc bracing.

REACTIONS. (size) 3=Mechanical, 2=0-3-8, 4=Mechanical
Max Horz 2=39(LC 12)
Max Uplift 3=-13(LC 12), 2=-22(LC 12)
Max Grav 3=46(LC 1), 2=145(LC 1), 4=39(LC 3)

FORCES. (lb) - Max. Comp./Max. Ten. - All forces 250 (lb) or less except when shown.

NOTES-
1) Wind: ASCE 7-16; Vult=120mph (3-second gust) Vasd=95mph; TCDL=6.0psf; BCDL=6.0psf; h=25ft; B=45ft; L=24ft; eave=4ft; Cat. II; Exp B; Enclosed; MWFRS (directional) and C-C Exterior(2E) zone;C-C for members and forces & MWFRS for reactions shown; Lumber DOL=1.60 plate grip DOL=1.60
2) This truss has been designed for a 10.0 psf bottom chord live load nonconcurrent with any other live loads.
3) * This truss has been designed for a live load of 20.0psf on the bottom chord in all areas where a rectangle 3-6-0 tall by 2-0-0 wide will fit between the bottom chord and any other members.
4) Refer to girder(s) for truss to truss connections.
5) Bearing at joint(s) 2 considers parallel to grain value using ANSI/TPI 1 angle to grain formula. Building designer should verify capacity of bearing surface.
6) Provide mechanical connection (by others) of truss to bearing plate capable of withstanding 100 lb uplift at joint(s) 3.
7) One H2.5A Simpson Strong-Tie connectors recommended to connect truss to bearing walls due to UPLIFT at jt(s) 2. This connection is for uplift only and does not consider lateral forces.
8) This truss is designed in accordance with the 2018 International Residential Code sections R502.11.1 and R802.10.2 and referenced standard ANSI/TPI 1.

October 27,2021

WARNING - Verify design parameters and READ NOTES ON THIS AND INCLUDED MITEK REFERENCE PAGE MII-7473 rev. 5/19/2020 BEFORE USE.
Design valid for use only with MiTek® connectors. This design is based only upon parameters shown, and is for an individual building component, not a truss system. Before use, the building designer must verify the applicability of design parameters and properly incorporate this design into the overall building design. Bracing indicated is to prevent buckling of individual truss web and/or chord members only. Additional temporary and permanent bracing is always required for stability and to prevent collapse with possible personal injury and property damage. For general guidance regarding the fabrication, storage, delivery, erection and bracing of trusses and truss systems, see **ANSI/TPI1 Quality Criteria, DSB-89 and BCSI Building Component Safety Information** available from Truss Plate Institute, 2670 Crain Highway, Suite 203 Waldorf, MD 20601

ENGINEERING BY TRENCO A MiTek Affiliate
818 Soundside Road
Edenton, NC 27932

Job	Truss	Truss Type	Qty	Ply	KB Home 149.2115.C Vol ceiling and tray
149_2115_C_VO_T	J6V	Jack-Open	1	1	I48539520 Job Reference (optional)

84 Components (Dunn), Dunn, NC - 28334, 8.520 s Aug 27 2021 MiTek Industries, Inc. Wed Oct 27 08:08:08 2021 Page 1
ID:bNZHYySm82JAWDNgfw9uCLzLbIt-sOHzEN?r9q5PCMrDmRpfFWwrQ4sjZd4pfPWEhfyPGr5

Scale = 1:9.6

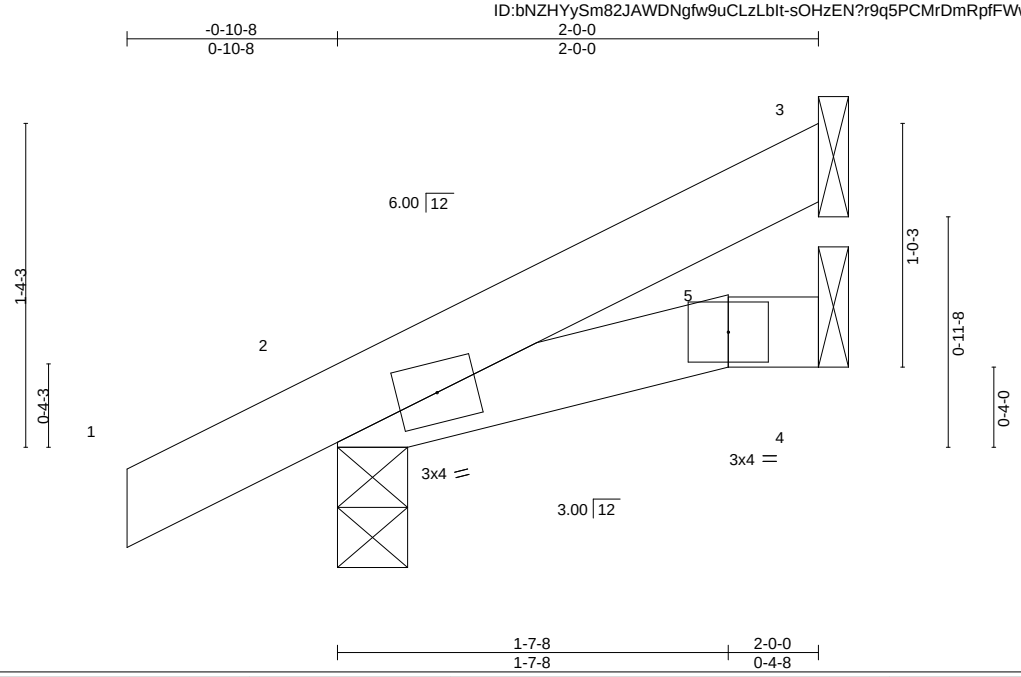

LOADING (psf)			SPACING- 2-0-0		CSI.		DEFL.	in	(loc)	l/defl	L/d	PLATES	GRIP
TCLL	20.0		Plate Grip DOL	1.15	TC	0.06	Vert(LL)	-0.00	2	>999	240	MT20	197/144
TCDL	10.0		Lumber DOL	1.15	BC	0.03	Vert(CT)	-0.00	5	>999	180		
BCLL	0.0	*	Rep Stress Incr	YES	WB	0.00	Horz(CT)	0.00	4	n/a	n/a		
BCDL	10.0		Code IRC2018/TPI2014		Matrix-P							Weight: 8 lb	FT = 20%

LUMBER-
TOP CHORD 2x4 SP No.2 or 2x4 SPF No.2
BOT CHORD 2x4 SP No.2 or 2x4 SPF No.2

BRACING-
TOP CHORD Structural wood sheathing directly applied or 2-0-0 oc purlins.
BOT CHORD Rigid ceiling directly applied or 6-0-0 oc bracing.

REACTIONS. (size) 3=Mechanical, 2=0-3-8, 4=Mechanical
Max Horz 2=39(LC 12)
Max Uplift 3=-13(LC 12), 2=-22(LC 12)
Max Grav 3=47(LC 1), 2=145(LC 1), 4=35(LC 3)

FORCES. (lb) - Max. Comp./Max. Ten. - All forces 250 (lb) or less except when shown.

NOTES-
1) Wind: ASCE 7-16; Vult=120mph (3-second gust) Vasd=95mph; TCDL=6.0psf; BCDL=6.0psf; h=25ft; B=45ft; L=24ft; eave=4ft; Cat. II; Exp B; Enclosed; MWFRS (directional) and C-C Exterior(2E) zone;C-C for members and forces & MWFRS for reactions shown; Lumber DOL=1.60 plate grip DOL=1.60
2) This truss has been designed for a 10.0 psf bottom chord live load nonconcurrent with any other live loads.
3) * This truss has been designed for a live load of 20.0psf on the bottom chord in all areas where a rectangle 3-6-0 tall by 2-0-0 wide will fit between the bottom chord and any other members.
4) Refer to girder(s) for truss to truss connections.
5) Bearing at joint(s) 2 considers parallel to grain value using ANSI/TPI 1 angle to grain formula. Building designer should verify capacity of bearing surface.
6) Provide mechanical connection (by others) of truss to bearing plate capable of withstanding 100 lb uplift at joint(s) 3.
7) One H2.5A Simpson Strong-Tie connectors recommended to connect truss to bearing walls due to UPLIFT at jt(s) 2. This connection is for uplift only and does not consider lateral forces.
8) This truss is designed in accordance with the 2018 International Residential Code sections R502.11.1 and R802.10.2 and referenced standard ANSI/TPI 1.

October 27,2021

WARNING - Verify design parameters and READ NOTES ON THIS AND INCLUDED MITEK REFERENCE PAGE MII-7473 rev. 5/19/2020 BEFORE USE.
Design valid for use only with MiTek® connectors. This design is based only upon parameters shown, and is for an individual building component, not a truss system. Before use, the building designer must verify the applicability of design parameters and properly incorporate this design into the overall building design. Bracing indicated is to prevent buckling of individual truss web and/or chord members only. Additional temporary and permanent bracing is always required for stability and to prevent collapse with possible personal injury and property damage. For general guidance regarding the fabrication, storage, delivery, erection and bracing of trusses and truss systems, see **ANSI/TPI1 Quality Criteria, DSB-89 and BCSI Building Component Safety Information** available from Truss Plate Institute, 2670 Crain Highway, Suite 203 Waldorf, MD 20601

ENGINEERING BY TRENCO A MiTek Affiliate
818 Soundside Road
Edenton, NC 27932

Job	Truss	Truss Type	Qty	Ply	KB Home 149.2115.C Vol ceiling and tray
149_2115_C_VO_T	JAT	Jack-Open	1	1	I48539521 Job Reference (optional)

84 Components (Dunn), Dunn, NC - 28334, 8.520 s Aug 27 2021 MiTek Industries, Inc. Wed Oct 27 08:08:09 2021 Page 1
ID:bNZHYySm82JAWDNgfw9uCLzLbIt-KbrLRi0Tw8DFqWQPJ9KunkTzuU96I4Kzt3FoD5yPGr4

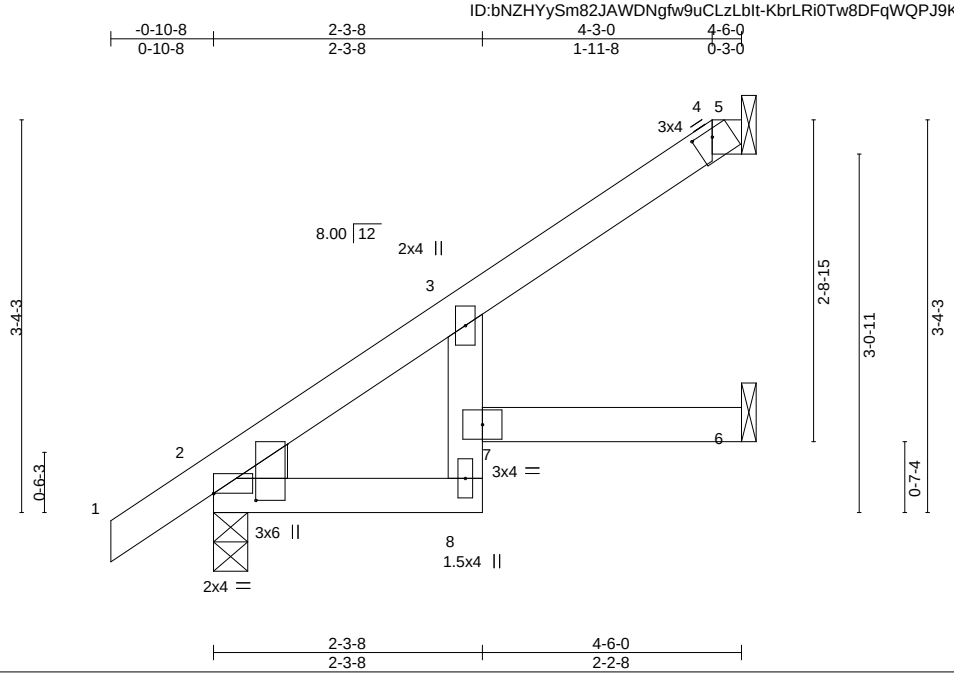

Plate Offsets (X,Y)-- [2:0-0-11,0-4-5], [2:0-0-0,0-0-0], [4:0-2-0,0-0-12]

LOADING (psf)		SPACING- 2-0-0		CSI.		DEFL.	in	(loc)	l/defl	L/d	PLATES	GRIP
TCLL	20.0	Plate Grip DOL	1.15	TC	0.20	Vert(LL)	-0.02	7	>999	240	MT20	197/144
TCDL	10.0	Lumber DOL	1.15	BC	0.21	Vert(CT)	-0.03	7	>999	180		
BCLL	0.0 *	Rep Stress Incr	YES	WB	0.00	Horz(CT)	0.01	6	n/a	n/a		
BCDL	10.0	Code IRC2018/TPI2014		Matrix-R							Weight: 19 lb	FT = 20%

LUMBER-
TOP CHORD 2x4 SP No.2 or 2x4 SPF No.2
BOT CHORD 2x4 SP No.2 or 2x4 SPF No.2 *Except*
3-8: 2x4 SP No.3
WEDGE
Left: 2x4 SP No.3

BRACING-
TOP CHORD Structural wood sheathing directly applied or 4-6-0 oc purlins, except 2-0-0 oc purlins: 4-5.
BOT CHORD Rigid ceiling directly applied or 10-0-0 oc bracing.

REACTIONS. (size) 5=Mechanical, 2=0-3-8, 6=Mechanical
Max Horz 2=90(LC 12)
Max Uplift 5=-29(LC 12), 2=-4(LC 12)
Max Grav 5=102(LC 1), 2=240(LC 1), 6=72(LC 3)

FORCES. (lb) - Max. Comp./Max. Ten. - All forces 250 (lb) or less except when shown.

NOTES-
1) Unbalanced roof live loads have been considered for this design.
2) Wind: ASCE 7-16; Vult=120mph (3-second gust) Vasd=95mph; TCDL=6.0psf; BCDL=6.0psf; h=25ft; B=45ft; L=24ft; eave=4ft; Cat. II; Exp B; Enclosed; MWFRS (directional) and C-C Exterior(2E) -0-10-8 to 2-1-12, Interior(1) 2-1-12 to 4-3-0, Exterior(2E) 4-3-0 to 4-5-4 zone; cantilever left and right exposed ; end vertical left and right exposed;C-C for members and forces & MWFRS for reactions shown; Lumber DOL=1.60 plate grip DOL=1.60
3) Provide adequate drainage to prevent water ponding.
4) This truss has been designed for a 10.0 psf bottom chord live load nonconcurrent with any other live loads.
5) * This truss has been designed for a live load of 20.0psf on the bottom chord in all areas where a rectangle 3-6-0 tall by 2-0-0 wide will fit between the bottom chord and any other members.
6) Refer to girder(s) for truss to truss connections.
7) Provide mechanical connection (by others) of truss to bearing plate capable of withstanding 100 lb uplift at joint(s) 5.
8) One MTS12 Simpson Strong-Tie connectors recommended to connect truss to bearing walls due to UPLIFT at jt(s) 6. This connection is for uplift only and does not consider lateral forces.
9) One H2.5A Simpson Strong-Tie connectors recommended to connect truss to bearing walls due to UPLIFT at jt(s) 2. This connection is for uplift only and does not consider lateral forces.
10) This truss is designed in accordance with the 2018 International Residential Code sections R502.11.1 and R802.10.2 and referenced standard ANSI/TPI 1.
11) Graphical purlin representation does not depict the size or the orientation of the purlin along the top and/or bottom chord.

October 27,2021

WARNING - Verify design parameters and READ NOTES ON THIS AND INCLUDED MITEK REFERENCE PAGE MII-7473 rev. 5/19/2020 BEFORE USE.
Design valid for use only with MiTek® connectors. This design is based only upon parameters shown, and is for an individual building component, not a truss system. Before use, the building designer must verify the applicability of design parameters and properly incorporate this design into the overall building design. Bracing indicated is to prevent buckling of individual truss web and/or chord members only. Additional temporary and permanent bracing is always required for stability and to prevent collapse with possible personal injury and property damage. For general guidance regarding the fabrication, storage, delivery, erection and bracing of trusses and truss systems, see **ANSI/TPI1 Quality Criteria, DSB-89 and BCSI Building Component Safety Information** available from Truss Plate Institute, 2670 Crain Highway, Suite 203 Waldorf, MD 20601

ENGINEERING BY TRENCO A MiTek Affiliate
818 Soundside Road
Edenton, NC 27932

Job	Truss	Truss Type	Qty	Ply	KB Home 149.2115.C Vol ceiling and tray
149_2115_C_VO_T	JBT	Jack-Open	1	1	I48539522 Job Reference (optional)

84 Components (Dunn), Dunn, NC - 28334, 8.520 s Aug 27 2021 MiTek Industries, Inc. Wed Oct 27 08:08:15 2021 Page 1
ID:bNZHYySm82JAWDNgfw9uCLzLbIt-9lCcim4EV_zPYRtZgQRI1?i0fuCAinprG?i6RlyPGr_

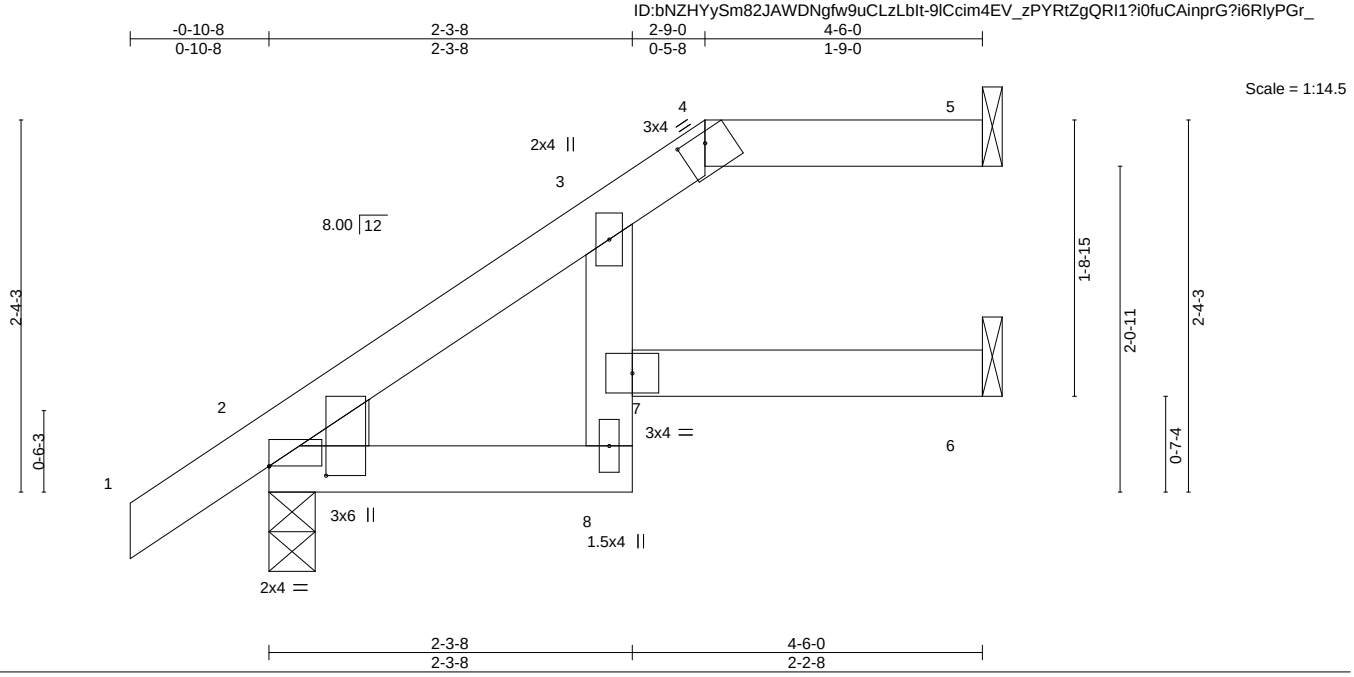

Plate Offsets (X,Y)-- [2:0-0-11,0-4-5], [2:0-0-0,0-0-0], [4:0-2-0,0-0-12]

LOADING (psf)		SPACING- 2-0-0		CSI.		DEFL.	in	(loc)	l/defl	L/d	PLATES	GRIP
TCLL	20.0	Plate Grip DOL	1.15	TC	0.18	Vert(LL)	-0.02	7	>999	240	MT20	197/144
TCDL	10.0	Lumber DOL	1.15	BC	0.24	Vert(CT)	-0.04	7	>999	180		
BCLL	0.0 *	Rep Stress Incr	YES	WB	0.00	Horz(CT)	0.03	5	n/a	n/a		
BCDL	10.0	Code IRC2018/TPI2014		Matrix-R							Weight: 19 lb	FT = 20%

LUMBER-
TOP CHORD 2x4 SP No.2 or 2x4 SPF No.2
BOT CHORD 2x4 SP No.2 or 2x4 SPF No.2 *Except*
3-8: 2x4 SP No.3
WEDGE
Left: 2x4 SP No.3

BRACING-
TOP CHORD Structural wood sheathing directly applied or 4-6-0 oc purlins, except 2-0-0 oc purlins: 4-5.
BOT CHORD Rigid ceiling directly applied or 10-0-0 oc bracing.

REACTIONS. (size) 5=Mechanical, 2=0-3-8, 6=Mechanical
Max Horz 2=65(LC 12)
Max Uplift 5=-22(LC 9), 2=-18(LC 12)
Max Grav 5=98(LC 1), 2=240(LC 1), 6=75(LC 3)

FORCES. (lb) - Max. Comp./Max. Ten. - All forces 250 (lb) or less except when shown.

NOTES-
1) Unbalanced roof live loads have been considered for this design.
2) Wind: ASCE 7-16; Vult=120mph (3-second gust) Vasd=95mph; TCDL=6.0psf; BCDL=6.0psf; h=25ft; B=45ft; L=24ft; eave=4ft; Cat. II; Exp B; Enclosed; MWFRS (directional) and C-C Exterior(2E) -0-10-8 to 2-1-12, Interior(1) 2-1-12 to 2-9-0, Exterior(2E) 2-9-0 to 4-5-4 zone; cantilever left and right exposed ; end vertical left and right exposed;C-C for members and forces & MWFRS for reactions shown; Lumber DOL=1.60 plate grip DOL=1.60
3) Provide adequate drainage to prevent water ponding.
4) This truss has been designed for a 10.0 psf bottom chord live load nonconcurrent with any other live loads.
5) * This truss has been designed for a live load of 20.0psf on the bottom chord in all areas where a rectangle 3-6-0 tall by 2-0-0 wide will fit between the bottom chord and any other members.
6) Refer to girder(s) for truss to truss connections.
7) Provide mechanical connection (by others) of truss to bearing plate capable of withstanding 100 lb uplift at joint(s) 5.
8) One MTS12 Simpson Strong-Tie connectors recommended to connect truss to bearing walls due to UPLIFT at jt(s) 6. This connection is for uplift only and does not consider lateral forces.
9) One H2.5A Simpson Strong-Tie connectors recommended to connect truss to bearing walls due to UPLIFT at jt(s) 2. This connection is for uplift only and does not consider lateral forces.
10) This truss is designed in accordance with the 2018 International Residential Code sections R502.11.1 and R802.10.2 and referenced standard ANSI/TPI 1.
11) Graphical purlin representation does not depict the size or the orientation of the purlin along the top and/or bottom chord.

October 27,2021

WARNING - Verify design parameters and READ NOTES ON THIS AND INCLUDED MITEK REFERENCE PAGE MII-7473 rev. 5/19/2020 BEFORE USE.
Design valid for use only with MiTek® connectors. This design is based only upon parameters shown, and is for an individual building component, not a truss system. Before use, the building designer must verify the applicability of design parameters and properly incorporate this design into the overall building design. Bracing indicated is to prevent buckling of individual truss web and/or chord members only. Additional temporary and permanent bracing is always required for stability and to prevent collapse with possible personal injury and property damage. For general guidance regarding the fabrication, storage, delivery, erection and bracing of trusses and truss systems, see **ANSI/TPI1 Quality Criteria, DSB-89 and BCSI Building Component Safety Information** available from Truss Plate Institute, 2670 Crain Highway, Suite 203 Waldorf, MD 20601

ENGINEERING BY TRENCO A MiTek Affiliate
818 Soundside Road
Edenton, NC 27932

Job	Truss	Truss Type	Qty	Ply	KB Home 149.2115.C Vol ceiling and tray
149_2115_C_VO_T	JE	Jack-Open Supported Gable	1	1	I48539523 Job Reference (optional)

84 Components (Dunn), Dunn, NC - 28334, 8.520 s Aug 27 2021 MiTek Industries, Inc. Wed Oct 27 08:08:21 2021 Page 1
ID:bNZHYySm82JAWDNgfw9uCLzLbIt-_uZtyp9?5qkYGMLj0gYiGGy3sJIT6UEkex9QePyPGqu

-0-10-8 4-6-0
0-10-8 4-6-0

Scale = 1:20.5

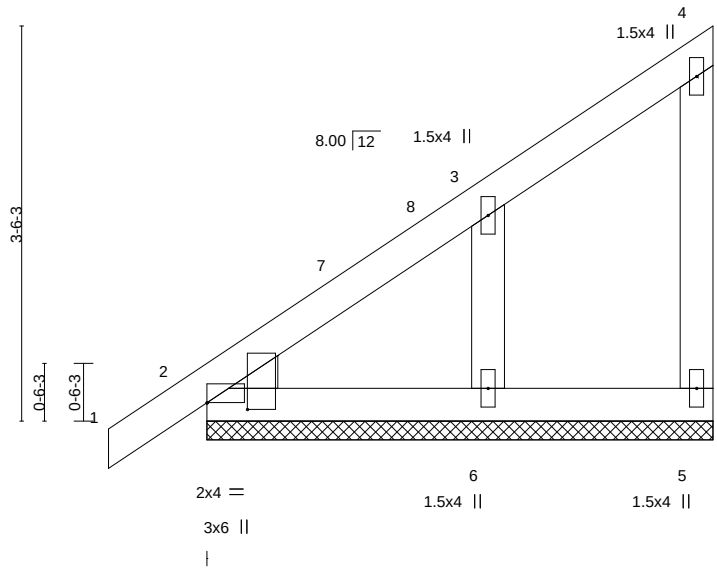

Plate Offsets (X,Y)-- [2:0-0-0,0-0-0], [2:0-0-11,0-4-5]

LOADING (psf)		SPACING- 2-0-0		CSI.		DEFL. in (loc) l/defl L/d					PLATES	GRIP
TCLL	20.0	Plate Grip DOL	1.15	TC	0.07	Vert(LL)	0.00	1	n/r	120	MT20	197/144
TCDL	10.0	Lumber DOL	1.15	BC	0.05	Vert(CT)	0.00	1	n/r	120		
BCLL	0.0 *	Rep Stress Incr	YES	WB	0.07	Horz(CT)	0.00		n/a	n/a		
BCDL	10.0	Code IRC2018/TPI2014		Matrix-P							Weight: 24 lb	FT = 20%

LUMBER-
TOP CHORD 2x4 SP No.2 or 2x4 SPF No.2
BOT CHORD 2x4 SP No.2 or 2x4 SPF No.2
WEBS 2x4 SP No.3
OTHERS 2x4 SP No.3
WEDGE
Left: 2x4 SP No.3

BRACING-
TOP CHORD Structural wood sheathing directly applied or 4-6-0 oc purlins, except end verticals.
BOT CHORD Rigid ceiling directly applied or 10-0-0 oc bracing.

REACTIONS. (size) 5=4-6-0, 2=4-6-0, 6=4-6-0
Max Horz 2=91(LC 12)
Max Uplift 5=-8(LC 12), 6=-30(LC 12)
Max Grav 5=51(LC 1), 2=144(LC 1), 6=207(LC 17)

FORCES. (lb) - Max. Comp./Max. Ten. - All forces 250 (lb) or less except when shown.

NOTES-
1) Wind: ASCE 7-16; Vult=120mph (3-second gust) Vasd=95mph; TCDL=6.0psf; BCDL=6.0psf; h=25ft; B=45ft; L=24ft; eave=2ft; Cat. II; Exp B; Enclosed; MWFRS (directional) and C-C Corner(3E) -0-10-8 to 2-1-8, Exterior(2N) 2-1-8 to 4-4-4 zone;C-C for members and forces & MWFRS for reactions shown; Lumber DOL=1.60 plate grip DOL=1.60
2) Truss designed for wind loads in the plane of the truss only. For studs exposed to wind (normal to the face), see Standard Industry Gable End Details as applicable, or consult qualified building designer as per ANSI/TPI 1.
3) Gable requires continuous bottom chord bearing.
4) Gable studs spaced at 2-0-0 oc.
5) This truss has been designed for a 10.0 psf bottom chord live load nonconcurrent with any other live loads.
6) * This truss has been designed for a live load of 20.0psf on the bottom chord in all areas where a rectangle 3-6-0 tall by 2-0-0 wide will fit between the bottom chord and any other members.
7) N/A

8) This truss is designed in accordance with the 2018 International Residential Code sections R502.11.1 and R802.10.2 and referenced standard ANSI/TPI 1.

October 27,2021

WARNING - Verify design parameters and READ NOTES ON THIS AND INCLUDED MITEK REFERENCE PAGE MII-7473 rev. 5/19/2020 BEFORE USE.
Design valid for use only with MiTek® connectors. This design is based only upon parameters shown, and is for an individual building component, not a truss system. Before use, the building designer must verify the applicability of design parameters and properly incorporate this design into the overall building design. Bracing indicated is to prevent buckling of individual truss web and/or chord members only. Additional temporary and permanent bracing is always required for stability and to prevent collapse with possible personal injury and property damage. For general guidance regarding the fabrication, storage, delivery, erection and bracing of trusses and truss systems, see **ANSI/TPI1 Quality Criteria, DSB-89 and BCSI Building Component Safety Information** available from Truss Plate Institute, 2670 Crain Highway, Suite 203 Waldorf, MD 20601

ENGINEERING BY TRENCO A MiTek Affiliate
818 Soundside Road
Edenton, NC 27932

Job	Truss	Truss Type	Qty	Ply	KB Home 149.2115.C Vol ceiling and tray
149_2115_C_VO_T	PB1	Piggyback	1	1	I48539524 Job Reference (optional)

84 Components (Dunn), Dunn, NC - 28334, 8.520 s Aug 27 2021 MiTek Industries, Inc. Wed Oct 27 08:08:23 2021 Page 1
ID:bNZHYySm82JAWDNgfw9uCLzLbIt-wHheNVBFdR_GVgU685aALh2Fz7xOaP715FeXiHyPGqs

10-4-0
10-4-0

Scale = 1:17.7

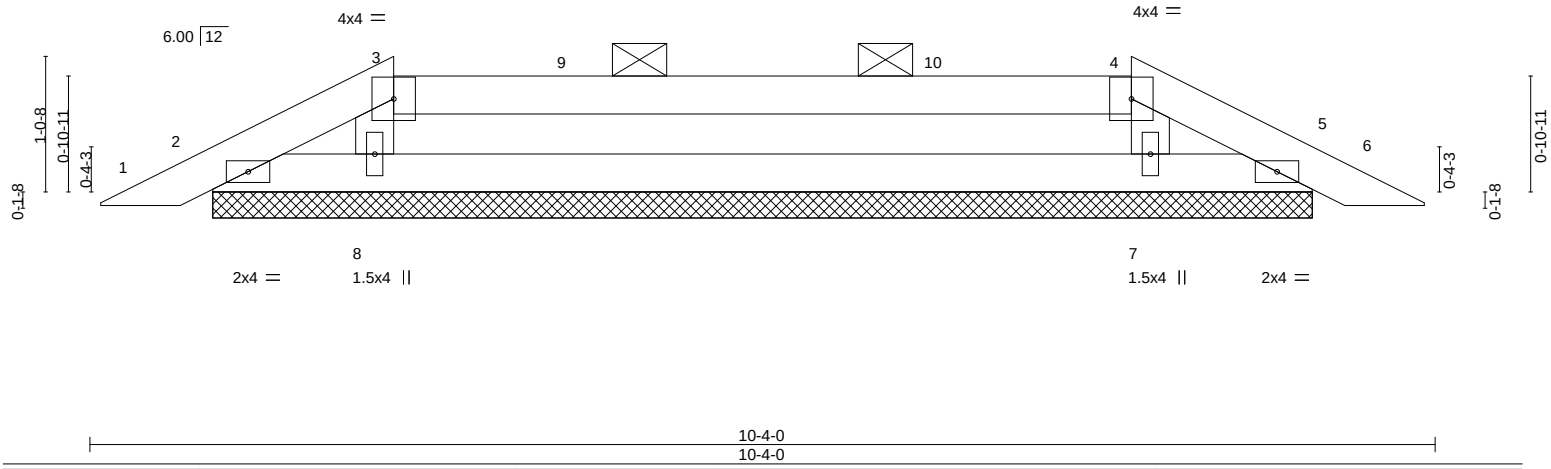

10-4-0
10-4-0

LOADING (psf)		SPACING- 2-0-0		CSI.		DEFL. in (loc) l/defl L/d		PLATES GRIP
TCLL	20.0	Plate Grip DOL	1.15	TC	0.67	Vert(LL) 0.00 5 n/r 120		MT20 197/144
TCDL	10.0	Lumber DOL	1.15	BC	0.21	Vert(CT) 0.00 5 n/r 120		
BCLL	0.0 *	Rep Stress Incr	YES	WB	0.04	Horz(CT) 0.00 7 n/a n/a		
BCDL	10.0	Code IRC2018/TPI2014		Matrix-P				Weight: 30 lb FT = 20%

LUMBER-
TOP CHORD 2x4 SP No.2 or 2x4 SPF No.2
BOT CHORD 2x4 SP No.2 or 2x4 SPF No.2
WEBS 2x4 SP No.3

BRACING-
TOP CHORD Structural wood sheathing directly applied or 10-0-0 oc purlins, except
2-0-0 oc purlins (6-0-0 max.): 3-4.
BOT CHORD Rigid ceiling directly applied or 6-0-0 oc bracing.

REACTIONS. All bearings 8-5-6.
(lb) - Max Horz 2=13(LC 11)
Max Uplift All uplift 100 lb or less at joint(s) 2, 5
Max Grav All reactions 250 lb or less at joint(s) 2, 5 except 8=330(LC 23), 7=330(LC 24)

FORCES. (lb) - Max. Comp./Max. Ten. - All forces 250 (lb) or less except when shown.

NOTES-
1) Unbalanced roof live loads have been considered for this design.
2) Wind: ASCE 7-16; Vult=120mph (3-second gust) Vasd=95mph; TCDL=6.0psf; BCDL=6.0psf; h=25ft; B=45ft; L=24ft; eave=4ft; Cat. II; Exp B; Enclosed; MWFRS (directional) and C-C Exterior(2E) 0-4-11 to 2-4-0, Exterior(2R) 2-4-0 to 6-6-15, Interior(1) 6-6-15 to 8-0-0, Exterior(2E) 8-0-0 to 9-11-5 zone;C-C for members and forces & MWFRS for reactions shown; Lumber DOL=1.60 plate grip DOL=1.60
3) Provide adequate drainage to prevent water ponding.
4) Gable requires continuous bottom chord bearing.
5) This truss has been designed for a 10.0 psf bottom chord live load nonconcurrent with any other live loads.
6) * This truss has been designed for a live load of 20.0psf on the bottom chord in all areas where a rectangle 3-6-0 tall by 2-0-0 wide will fit between the bottom chord and any other members.
7) N/A
8) This truss is designed in accordance with the 2018 International Residential Code sections R502.11.1 and R802.10.2 and referenced standard ANSI/TPI 1.
9) See Standard Industry Piggyback Truss Connection Detail for Connection to base truss as applicable, or consult qualified building designer.
10) Graphical purlin representation does not depict the size or the orientation of the purlin along the top and/or bottom chord.

October 27,2021

WARNING - Verify design parameters and READ NOTES ON THIS AND INCLUDED MITEK REFERENCE PAGE MII-7473 rev. 5/19/2020 BEFORE USE.
Design valid for use only with MiTek® connectors. This design is based only upon parameters shown, and is for an individual building component, not a truss system. Before use, the building designer must verify the applicability of design parameters and properly incorporate this design into the overall building design. Bracing indicated is to prevent buckling of individual truss web and/or chord members only. Additional temporary and permanent bracing is always required for stability and to prevent collapse with possible personal injury and property damage. For general guidance regarding the fabrication, storage, delivery, erection and bracing of trusses and truss systems, see **ANSI/TPI1 Quality Criteria, DSB-89 and BCSI Building Component Safety Information** available from Truss Plate Institute, 2670 Crain Highway, Suite 203 Waldorf, MD 20601

ENGINEERING BY TRENCO A MiTek Affiliate
818 Soundside Road
Edenton, NC 27932

Job	Truss	Truss Type	Qty	Ply	KB Home 149.2115.C Vol ceiling and tray
149_2115_C_VO_T	PB2	Piggyback	7	1	I48539525 Job Reference (optional)

84 Components (Dunn), Dunn, NC - 28334, 8.520 s Aug 27 2021 MiTek Industries, Inc. Wed Oct 27 08:08:23 2021 Page 1
ID:bNZHYySm82JAWDNgfw9uCLzLbIt-wHheNVBFdR_GVgU685aALh2KK7ywaP315FeXiHyPGqs

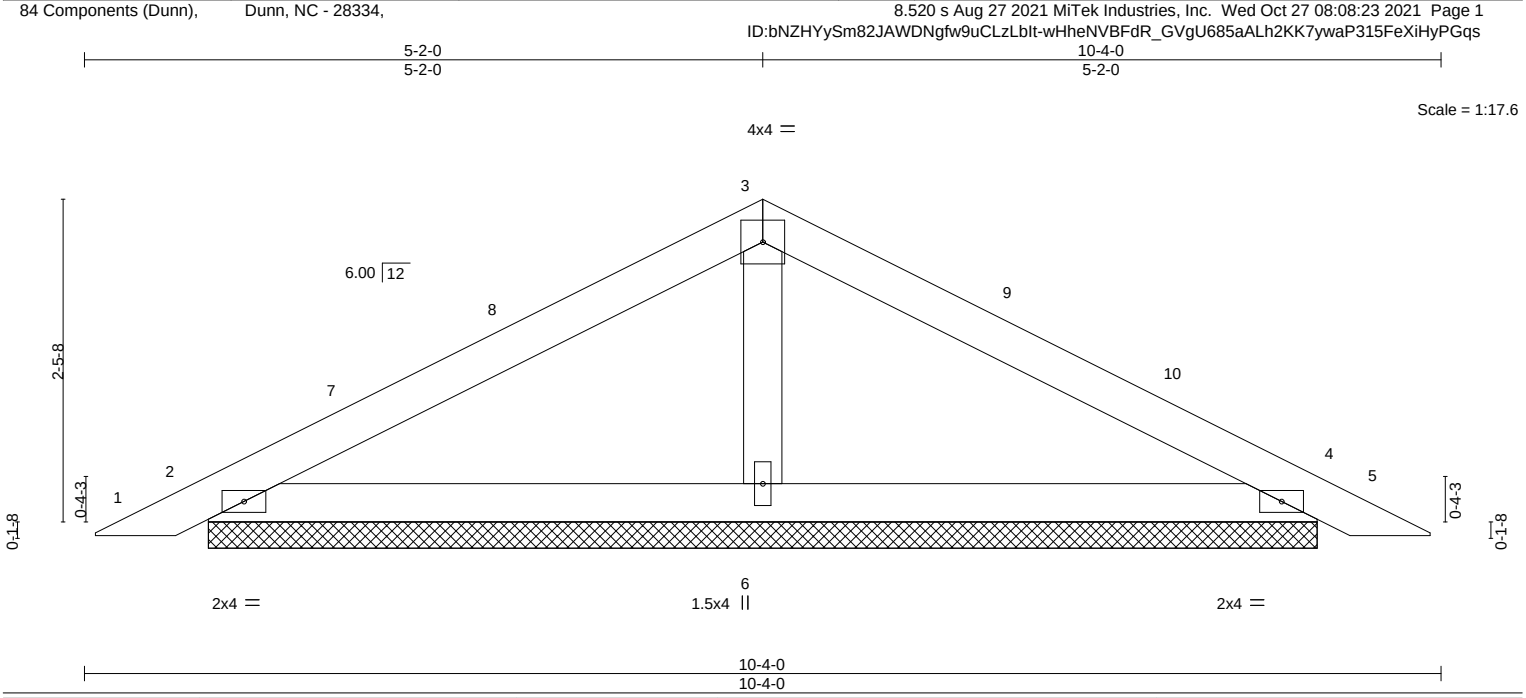

LOADING (psf)		SPACING- 2-0-0		CSI.		DEFL. in (loc) l/defl L/d		PLATES GRIP
TCLL	20.0	Plate Grip DOL	1.15	TC	0.33	Vert(LL) 0.01 5 n/r 120		MT20 197/144
TCDL	10.0	Lumber DOL	1.15	BC	0.18	Vert(CT) 0.02 5 n/r 120		
BCLL	0.0 *	Rep Stress Incr	YES	WB	0.05	Horz(CT) 0.00 4 n/a n/a		
BCDL	10.0	Code IRC2018/TPI2014		Matrix-P				Weight: 32 lb FT = 20%

LUMBER-
TOP CHORD 2x4 SP No.2 or 2x4 SPF No.2
BOT CHORD 2x4 SP No.2 or 2x4 SPF No.2
OTHERS 2x4 SP No.3

BRACING-
TOP CHORD Structural wood sheathing directly applied or 6-0-0 oc purlins.
BOT CHORD Rigid ceiling directly applied or 10-0-0 oc bracing.

REACTIONS. (size) 2=8-5-6, 4=8-5-6, 6=8-5-6
Max Horz 2=-34(LC 10)
Max Uplift 2=-32(LC 12), 4=-32(LC 12)
Max Grav 2=207(LC 1), 4=207(LC 1), 6=329(LC 1)

FORCES. (lb) - Max. Comp./Max. Ten. - All forces 250 (lb) or less except when shown.

NOTES-
1) Unbalanced roof live loads have been considered for this design.
2) Wind: ASCE 7-16; Vult=120mph (3-second gust) Vasd=95mph; TCDL=6.0psf; BCDL=6.0psf; h=25ft; B=45ft; L=24ft; eave=4ft; Cat. II; Exp B; Enclosed; MWFRS (directional) and C-C Exterior(2E) 0-4-11 to 3-4-11, Interior(1) 3-4-11 to 5-2-0, Exterior(2R) 5-2-0 to 8-2-0, Interior(1) 8-2-0 to 9-11-5 zone;C-C for members and forces & MWFRS for reactions shown; Lumber DOL=1.60 plate grip DOL=1.60
3) Gable requires continuous bottom chord bearing.
4) This truss has been designed for a 10.0 psf bottom chord live load nonconcurrent with any other live loads.
5) * This truss has been designed for a live load of 20.0psf on the bottom chord in all areas where a rectangle 3-6-0 tall by 2-0-0 wide will fit between the bottom chord and any other members.
6) N/A

7) This truss is designed in accordance with the 2018 International Residential Code sections R502.11.1 and R802.10.2 and referenced standard ANSI/TPI 1.
8) See Standard Industry Piggyback Truss Connection Detail for Connection to base truss as applicable, or consult qualified building designer.

October 27,2021

WARNING - Verify design parameters and READ NOTES ON THIS AND INCLUDED MITEK REFERENCE PAGE MII-7473 rev. 5/19/2020 BEFORE USE.
Design valid for use only with MiTek® connectors. This design is based only upon parameters shown, and is for an individual building component, not a truss system. Before use, the building designer must verify the applicability of design parameters and properly incorporate this design into the overall building design. Bracing indicated is to prevent buckling of individual truss web and/or chord members only. Additional temporary and permanent bracing is always required for stability and to prevent collapse with possible personal injury and property damage. For general guidance regarding the fabrication, storage, delivery, erection and bracing of trusses and truss systems, see **ANSI/TPI1 Quality Criteria, DSB-89 and BCSI Building Component Safety Information** available from Truss Plate Institute, 2670 Crain Highway, Suite 203 Waldorf, MD 20601

ENGINEERING BY TRENCO A MiTek Affiliate
818 Soundside Road
Edenton, NC 27932

Job	Truss	Truss Type	Qty	Ply	KB Home 149.2115.C Vol ceiling and tray
149_2115_C_VO_T	PB3	Piggyback	1	1	I48539526 Job Reference (optional)

84 Components (Dunn), Dunn, NC - 28334, 8.520 s Aug 27 2021 MiTek Industries, Inc. Wed Oct 27 08:08:27 2021 Page 1
ID:bNZHYySm82JAWDNgfw9uCLzLbIt-o2x8DsEmhgUi_HotNxe6WXCyHkJkWD8c0tclr3yPGqo

10-4-0
10-4-0

Scale = 1:17.7

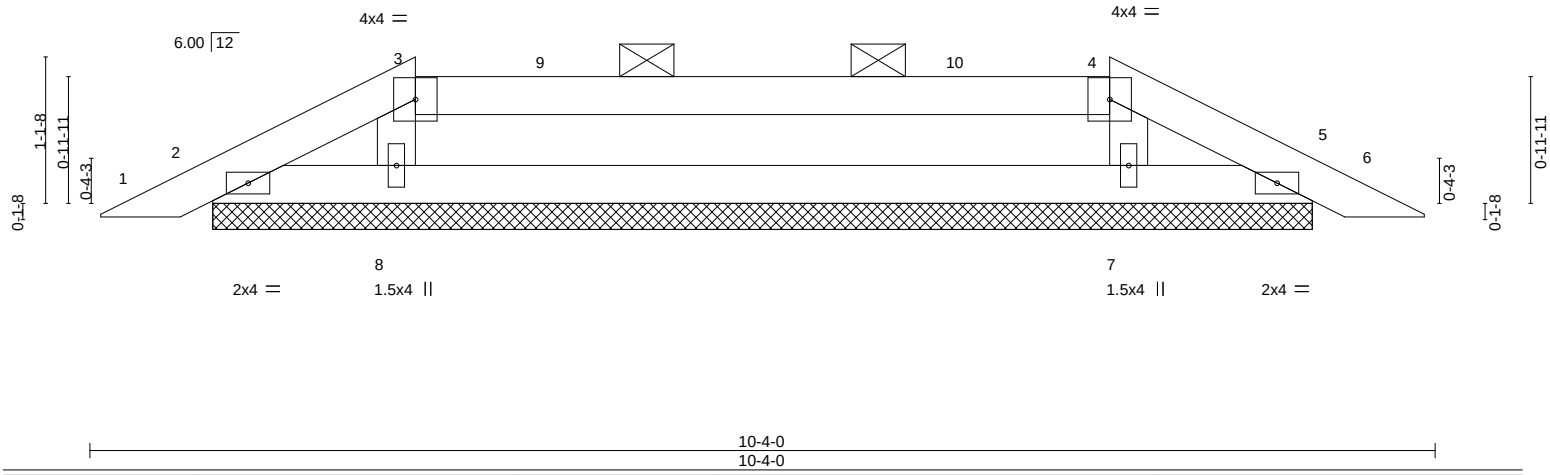

LOADING (psf)		SPACING- 2-0-0		CSI.		DEFL. in (loc) l/defl L/d		PLATES GRIP
TCLL	20.0	Plate Grip DOL	1.15	TC	0.59	Vert(LL) 0.00 5 n/r 120		MT20 197/144
TCDL	10.0	Lumber DOL	1.15	BC	0.19	Vert(CT) 0.00 5 n/r 120		
BCLL	0.0 *	Rep Stress Incr	YES	WB	0.04	Horz(CT) 0.00 7 n/a n/a		
BCDL	10.0	Code IRC2018/TPI2014		Matrix-P				Weight: 30 lb FT = 20%

LUMBER-
TOP CHORD 2x4 SP No.2 or 2x4 SPF No.2
BOT CHORD 2x4 SP No.2 or 2x4 SPF No.2
WEBS 2x4 SP No.3

BRACING-
TOP CHORD Structural wood sheathing directly applied or 10-0-0 oc purlins, except
2-0-0 oc purlins (6-0-0 max.): 3-4.
BOT CHORD Rigid ceiling directly applied or 6-0-0 oc bracing.

REACTIONS. All bearings 8-5-6.
(lb) - Max Horz 2=-14(LC 10)
Max Uplift All uplift 100 lb or less at joint(s) 2, 5
Max Grav All reactions 250 lb or less at joint(s) 2, 5 except 8=311(LC 23), 7=311(LC 24)

FORCES. (lb) - Max. Comp./Max. Ten. - All forces 250 (lb) or less except when shown.

NOTES-
1) Unbalanced roof live loads have been considered for this design.
2) Wind: ASCE 7-16; Vult=120mph (3-second gust) Vasd=95mph; TCDL=6.0psf; BCDL=6.0psf; h=25ft; B=45ft; L=24ft; eave=4ft; Cat. II; Exp B; Enclosed; MWFRS (directional) and C-C Exterior(2E) 0-4-11 to 2-6-0, Exterior(2R) 2-6-0 to 6-8-15, Interior(1) 6-8-15 to 7-10-0, Exterior(2E) 7-10-0 to 9-11-5 zone;C-C for members and forces & MWFRS for reactions shown; Lumber DOL=1.60 plate grip DOL=1.60
3) Provide adequate drainage to prevent water ponding.
4) Gable requires continuous bottom chord bearing.
5) This truss has been designed for a 10.0 psf bottom chord live load nonconcurrent with any other live loads.
6) * This truss has been designed for a live load of 20.0psf on the bottom chord in all areas where a rectangle 3-6-0 tall by 2-0-0 wide will fit between the bottom chord and any other members.
7) N/A
8) This truss is designed in accordance with the 2018 International Residential Code sections R502.11.1 and R802.10.2 and referenced standard ANSI/TPI 1.
9) See Standard Industry Piggyback Truss Connection Detail for Connection to base truss as applicable, or consult qualified building designer.
10) Graphical purlin representation does not depict the size or the orientation of the purlin along the top and/or bottom chord.

October 27,2021

WARNING - Verify design parameters and READ NOTES ON THIS AND INCLUDED MITEK REFERENCE PAGE MII-7473 rev. 5/19/2020 BEFORE USE.
Design valid for use only with MiTek® connectors. This design is based only upon parameters shown, and is for an individual building component, not a truss system. Before use, the building designer must verify the applicability of design parameters and properly incorporate this design into the overall building design. Bracing indicated is to prevent buckling of individual truss web and/or chord members only. Additional temporary and permanent bracing is always required for stability and to prevent collapse with possible personal injury and property damage. For general guidance regarding the fabrication, storage, delivery, erection and bracing of trusses and truss systems, see **ANSI/TPI1 Quality Criteria, DSB-89 and BCSI Building Component Safety Information** available from Truss Plate Institute, 2670 Crain Highway, Suite 203 Waldorf, MD 20601

ENGINEERING BY TRENCO A MiTek Affiliate
818 Soundside Road
Edenton, NC 27932

Job	Truss	Truss Type	Qty	Ply	KB Home 149.2115.C Vol ceiling and tray
149_2115_C_VO_T	VA1	GABLE	1	1	I48539527 Job Reference (optional)

84 Components (Dunn), Dunn, NC - 28334, 8.520 s Aug 27 2021 MiTek Industries, Inc. Wed Oct 27 08:08:29 2021 Page 1
ID:bNZHYySm82JAWDNgfw9uCLzLbIt-lR2veYF0CHkQDbyFUMhabyIQjY1X_6YvUA5rwxyPGqm

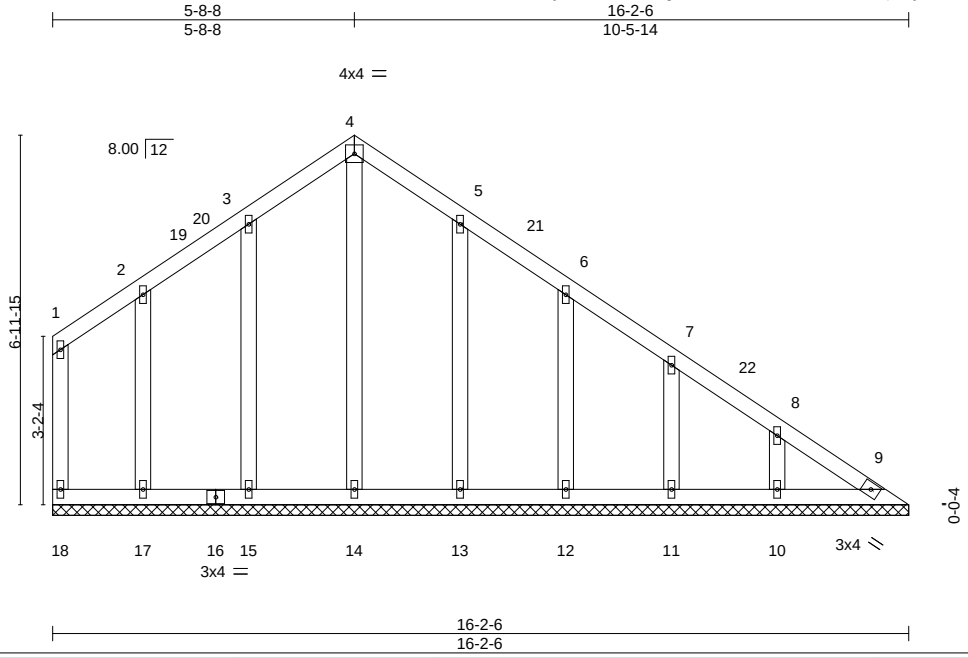

LOADING (psf)		SPACING- 2-0-0		CSI.		DEFL.	in	(loc)	l/defl	L/d	PLATES	GRIP
TCLL	20.0	Plate Grip DOL	1.15	TC	0.08	Vert(LL)	n/a	-	n/a	999	MT20	197/144
TCDL	10.0	Lumber DOL	1.15	BC	0.04	Vert(CT)	n/a	-	n/a	999		
BCLL	0.0 *	Rep Stress Incr	YES	WB	0.11	Horz(CT)	0.00	9	n/a	n/a		
BCDL	10.0	Code IRC2018/TPI2014		Matrix-S							Weight: 98 lb	FT = 20%

LUMBER-
TOP CHORD 2x4 SP No.2 or 2x4 SPF No.2
BOT CHORD 2x4 SP No.2 or 2x4 SPF No.2
WEBS 2x4 SP No.3
OTHERS 2x4 SP No.3

BRACING-
TOP CHORD Structural wood sheathing directly applied or 6-0-0 oc purlins, except end verticals.
BOT CHORD Rigid ceiling directly applied or 10-0-0 oc bracing.

REACTIONS. All bearings 16-2-6.
(lb) - Max Horz 18=-151(LC 10)
Max Uplift All uplift 100 lb or less at joint(s) 18, 9, 14, 15, 17, 13, 12, 11, 10
Max Grav All reactions 250 lb or less at joint(s) 18, 9, 14, 15, 17, 13, 12, 11, 10

FORCES. (lb) - Max. Comp./Max. Ten. - All forces 250 (lb) or less except when shown.

NOTES-
1) Unbalanced roof live loads have been considered for this design.
2) Wind: ASCE 7-16; Vult=120mph (3-second gust) Vasd=95mph; TCDL=6.0psf; BCDL=6.0psf; h=25ft; B=45ft; L=24ft; eave=4ft; Cat. II; Exp B; Enclosed; MWFRS (directional) and C-C Exterior(2E) 0-1-12 to 3-1-12, Interior(1) 3-1-12 to 5-8-8, Exterior(2R) 5-8-8 to 8-8-8, Interior(1) 8-8-8 to 15-8-10 zone; cantilever left and right exposed ; end vertical left and right exposed;C-C for members and forces & MWFRS for reactions shown; Lumber DOL=1.60 plate grip DOL=1.60
3) All plates are 1.5x4 MT20 unless otherwise indicated.
4) Gable requires continuous bottom chord bearing.
5) This truss has been designed for a 10.0 psf bottom chord live load nonconcurrent with any other live loads.
6) * This truss has been designed for a live load of 20.0psf on the bottom chord in all areas where a rectangle 3-6-0 tall by 2-0-0 wide will fit between the bottom chord and any other members.
7) N/A

8) N/A

9) This truss is designed in accordance with the 2018 International Residential Code sections R502.11.1 and R802.10.2 and referenced standard ANSI/TPI 1.

October 27,2021

WARNING - Verify design parameters and READ NOTES ON THIS AND INCLUDED MITEK REFERENCE PAGE MII-7473 rev. 5/19/2020 BEFORE USE.
Design valid for use only with MiTek® connectors. This design is based only upon parameters shown, and is for an individual building component, not a truss system. Before use, the building designer must verify the applicability of design parameters and properly incorporate this design into the overall building design. Bracing indicated is to prevent buckling of individual truss web and/or chord members only. Additional temporary and permanent bracing is always required for stability and to prevent collapse with possible personal injury and property damage. For general guidance regarding the fabrication, storage, delivery, erection and bracing of trusses and truss systems, see **ANSI/TPI1 Quality Criteria, DSB-89 and BCSI Building Component Safety Information** available from Truss Plate Institute, 2670 Crain Highway, Suite 203 Waldorf, MD 20601

ENGINEERING BY TRENCO A MiTek Affiliate
818 Soundside Road
Edenton, NC 27932

Job	Truss	Truss Type	Qty	Ply	KB Home 149.2115.C Vol ceiling and tray
149_2115_C_VO_T	VA2	Valley	1	1	I48539528 Job Reference (optional)

84 Components (Dunn), Dunn, NC - 28334, 8.520 s Aug 27 2021 MiTek Industries, Inc. Wed Oct 27 08:08:31 2021 Page 1
ID:bNZHYySm82JAWDNgfw9uCLzLbIt-hqAf2EHHku_8Tv6ecnj2gNNg8LguS?jCxUay_qyPGqk

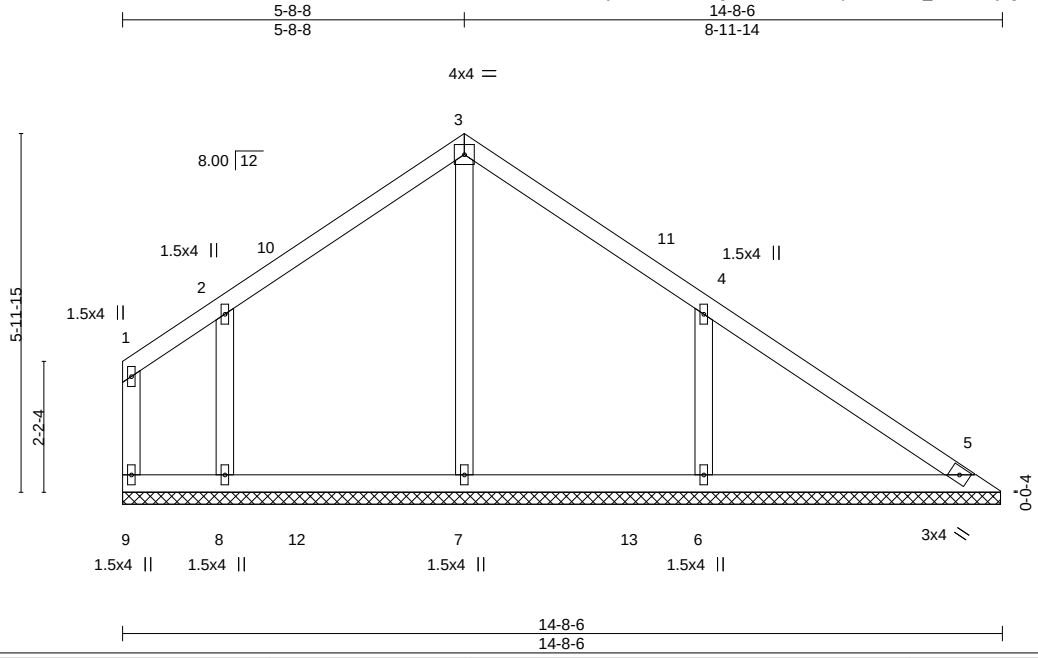

LOADING (psf)			SPACING- 2-0-0		CSI.		DEFL.	in	(loc)	l/defl	L/d	PLATES	GRIP
TCLL	20.0		Plate Grip DOL	1.15	TC	0.47	Vert(LL)	n/a	-	n/a	999	MT20	197/144
TCDL	10.0		Lumber DOL	1.15	BC	0.17	Vert(CT)	n/a	-	n/a	999		
BCLL	0.0	*	Rep Stress Incr	YES	WB	0.13	Horz(CT)	0.00	5	n/a	n/a		
BCDL	10.0		Code IRC2018/TPI2014		Matrix-S							Weight: 66 lb	FT = 20%

LUMBER-
TOP CHORD 2x4 SP No.3
BOT CHORD 2x4 SP No.2 or 2x4 SPF No.2
WEBS 2x4 SP No.3
OTHERS 2x4 SP No.3

BRACING-
TOP CHORD Structural wood sheathing directly applied or 6-0-0 oc purlins, except end verticals.
BOT CHORD Rigid ceiling directly applied or 6-0-0 oc bracing.

REACTIONS. All bearings 14-8-0.
(lb) - Max Horz 9=-121(LC 10)
Max Uplift All uplift 100 lb or less at joint(s) 9, 8, 6
Max Grav All reactions 250 lb or less at joint(s) 9, 5 except 7=401(LC 18), 8=372(LC 17), 6=489(LC 18)

FORCES. (lb) - Max. Comp./Max. Ten. - All forces 250 (lb) or less except when shown.
WEBS 4-6=-303/145

NOTES-
1) Unbalanced roof live loads have been considered for this design.
2) Wind: ASCE 7-16; Vult=120mph (3-second gust) Vasd=95mph; TCDL=6.0psf; BCDL=6.0psf; h=25ft; B=45ft; L=24ft; eave=4ft; Cat. II; Exp B; Enclosed; MWFRS (directional) and C-C Exterior(2E) 0-1-12 to 3-1-12, Interior(1) 3-1-12 to 5-8-8, Exterior(2R) 5-8-8 to 8-8-8, Interior(1) 8-8-8 to 14-2-10 zone; cantilever left and right exposed ; end vertical left and right exposed;C-C for members and forces & MWFRS for reactions shown; Lumber DOL=1.60 plate grip DOL=1.60
3) Gable requires continuous bottom chord bearing.
4) This truss has been designed for a 10.0 psf bottom chord live load nonconcurrent with any other live loads.
5) * This truss has been designed for a live load of 20.0psf on the bottom chord in all areas where a rectangle 3-6-0 tall by 2-0-0 wide will fit between the bottom chord and any other members, with BCDL = 10.0psf.
6) N/A

7) This truss is designed in accordance with the 2018 International Residential Code sections R502.11.1 and R802.10.2 and referenced standard ANSI/TPI 1.

October 27,2021

WARNING - Verify design parameters and READ NOTES ON THIS AND INCLUDED MITEK REFERENCE PAGE MII-7473 rev. 5/19/2020 BEFORE USE.
Design valid for use only with MiTek® connectors. This design is based only upon parameters shown, and is for an individual building component, not a truss system. Before use, the building designer must verify the applicability of design parameters and properly incorporate this design into the overall building design. Bracing indicated is to prevent buckling of individual truss web and/or chord members only. Additional temporary and permanent bracing is always required for stability and to prevent collapse with possible personal injury and property damage. For general guidance regarding the fabrication, storage, delivery, erection and bracing of trusses and truss systems, see **ANSI/TPI1 Quality Criteria, DSB-89 and BCSI Building Component Safety Information** available from Truss Plate Institute, 2670 Crain Highway, Suite 203 Waldorf, MD 20601

ENGINEERING BY TRENCO A MiTek Affiliate
818 Soundside Road
Edenton, NC 27932

Job	Truss	Truss Type	Qty	Ply	KB Home 149.2115.C Vol ceiling and tray
149_2115_C_VO_T	VA3	Valley	1	1	I48539529 Job Reference (optional)

84 Components (Dunn), Dunn, NC - 28334, 8.520 s Aug 27 2021 MiTek Industries, Inc. Wed Oct 27 08:08:33 2021 Page 1
ID:bNZHYySm82JAWDNgfw9uCLzLbIt-dCIQTwIXGWFsiCF1jBlWloS2s9NFwvoVPo333iyPGqi

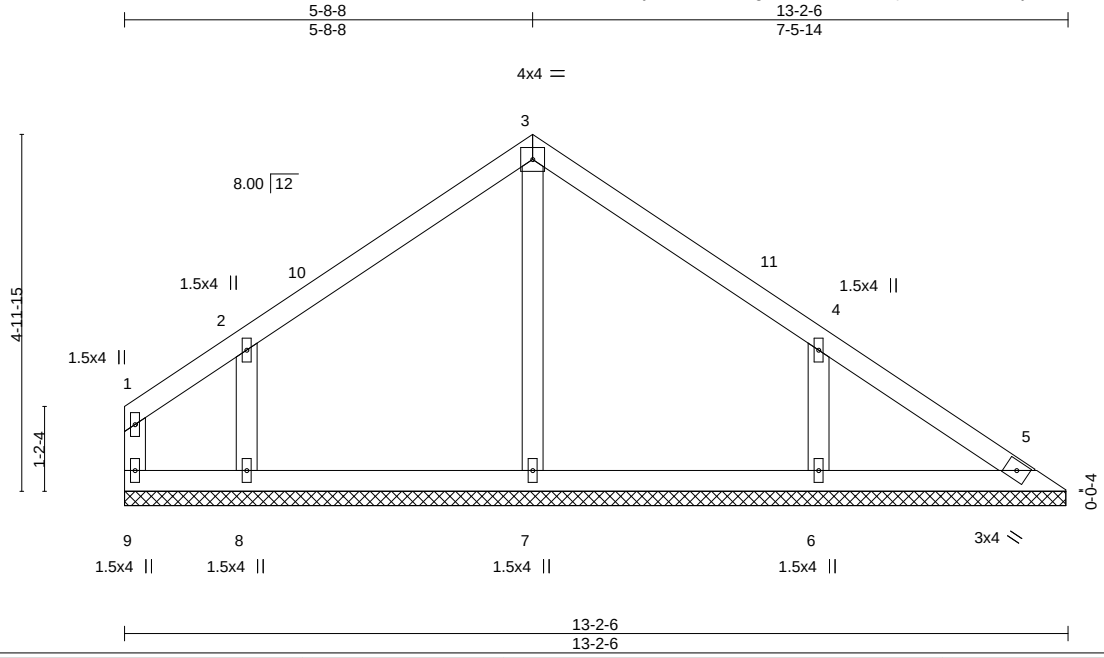

LOADING (psf)			SPACING-	2-0-0	CSI.		DEFL.	in	(loc)	l/defl	L/d	PLATES	GRIP
TCLL	20.0		Plate Grip DOL	1.15	TC	0.33	Vert(LL)	n/a	-	n/a	999	MT20	197/144
TCDL	10.0		Lumber DOL	1.15	BC	0.12	Vert(CT)	n/a	-	n/a	999		
BCLL	0.0	*	Rep Stress Incr	YES	WB	0.10	Horz(CT)	0.00	5	n/a	n/a		
BCDL	10.0		Code IRC2018/TPI2014		Matrix-S							Weight: 55 lb	FT = 20%

LUMBER-
TOP CHORD 2x4 SP No.3
BOT CHORD 2x4 SP No.2 or 2x4 SPF No.2
WEBS 2x4 SP No.3
OTHERS 2x4 SP No.3

BRACING-
TOP CHORD Structural wood sheathing directly applied or 6-0-0 oc purlins, except end verticals.
BOT CHORD Rigid ceiling directly applied or 10-0-0 oc bracing.

REACTIONS. All bearings 13-2-0.
(lb) - Max Horz 9=-92(LC 10)
Max Uplift All uplift 100 lb or less at joint(s) 9, 8, 6
Max Grav All reactions 250 lb or less at joint(s) 9, 5 except 7=299(LC 1), 8=297(LC 17), 6=331(LC 24)

FORCES. (lb) - Max. Comp./Max. Ten. - All forces 250 (lb) or less except when shown.
WEBS 4-6=-252/134

NOTES-
1) Unbalanced roof live loads have been considered for this design.
2) Wind: ASCE 7-16; Vult=120mph (3-second gust) Vasd=95mph; TCDL=6.0psf; BCDL=6.0psf; h=25ft; B=45ft; L=24ft; eave=4ft; Cat. II; Exp B; Enclosed; MWFRS (directional) and C-C Exterior(2E) 0-1-12 to 3-1-12, Interior(1) 3-1-12 to 5-8-8, Exterior(2R) 5-8-8 to 8-8-8, Interior(1) 8-8-8 to 12-8-10 zone; cantilever left and right exposed ; end vertical left and right exposed;C-C for members and forces & MWFRS for reactions shown; Lumber DOL=1.60 plate grip DOL=1.60
3) Gable requires continuous bottom chord bearing.
4) This truss has been designed for a 10.0 psf bottom chord live load nonconcurrent with any other live loads.
5) * This truss has been designed for a live load of 20.0psf on the bottom chord in all areas where a rectangle 3-6-0 tall by 2-0-0 wide will fit between the bottom chord and any other members.
6) N/A

7) This truss is designed in accordance with the 2018 International Residential Code sections R502.11.1 and R802.10.2 and referenced standard ANSI/TPI 1.

October 27,2021

WARNING - Verify design parameters and READ NOTES ON THIS AND INCLUDED MITEK REFERENCE PAGE MII-7473 rev. 5/19/2020 BEFORE USE.
Design valid for use only with MiTek® connectors. This design is based only upon parameters shown, and is for an individual building component, not a truss system. Before use, the building designer must verify the applicability of design parameters and properly incorporate this design into the overall building design. Bracing indicated is to prevent buckling of individual truss web and/or chord members only. Additional temporary and permanent bracing is always required for stability and to prevent collapse with possible personal injury and property damage. For general guidance regarding the fabrication, storage, delivery, erection and bracing of trusses and truss systems, see **ANSI/TPI1 Quality Criteria, DSB-89 and BCSI Building Component Safety Information** available from Truss Plate Institute, 2670 Crain Highway, Suite 203 Waldorf, MD 20601

ENGINEERING BY TRENCO A MiTek Affiliate
818 Soundside Road
Edenton, NC 27932

Job	Truss	Truss Type	Qty	Ply	KB Home 149.2115.C Vol ceiling and tray
149_2115_C_VO_T	VA4	Valley	1	1	I48539530 Job Reference (optional)

84 Components (Dunn), Dunn, NC - 28334, 8.520 s Aug 27 2021 MiTek Industries, Inc. Wed Oct 27 08:08:34 2021 Page 1
ID:bNZHYySm82JAWDNgfw9uCLzLbIt-5PsohGJ91pNiKMqDHvGlI??EtZh2fNfedSpcb9yPGqh

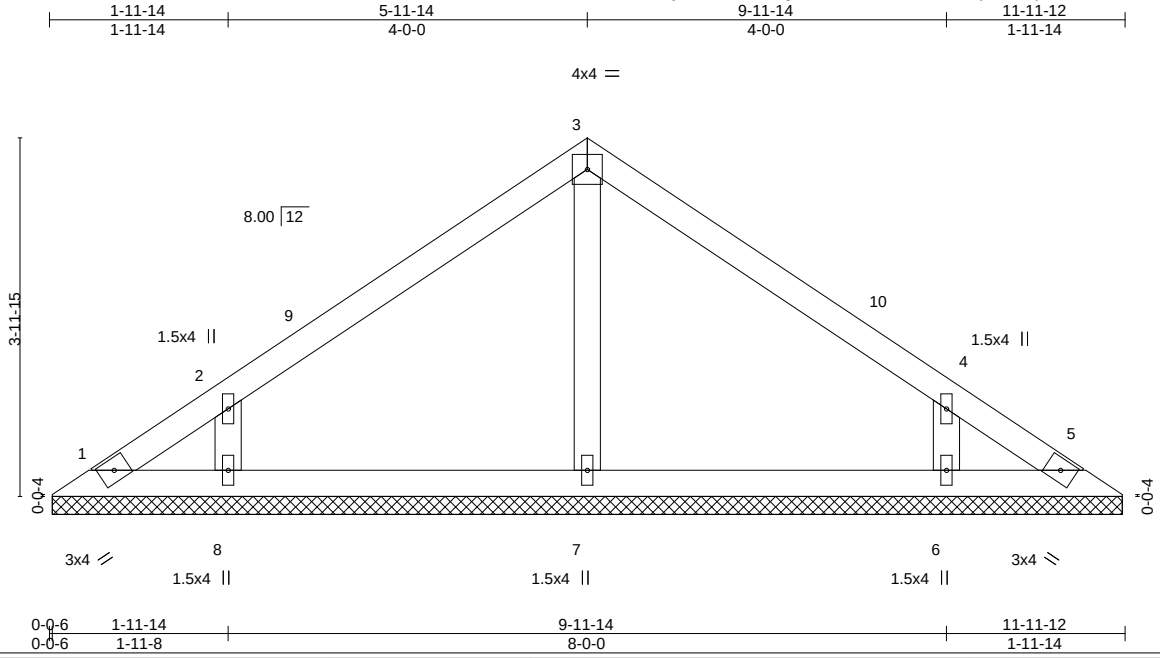

LOADING (psf)		SPACING- 2-0-0		CSI.		DEFL.	in	(loc)	l/defl	L/d	PLATES	GRIP
TCLL	20.0	Plate Grip DOL	1.15	TC	0.31	Vert(LL)	n/a	-	n/a	999	MT20	244/190
TCDL	10.0	Lumber DOL	1.15	BC	0.21	Vert(CT)	n/a	-	n/a	999		
BCLL	0.0 *	Rep Stress Incr	YES	WB	0.06	Horz(CT)	0.00	5	n/a	n/a		
BCDL	10.0	Code IRC2018/TPI2014		Matrix-S							Weight: 45 lb	FT = 20%

LUMBER-
TOP CHORD 2x4 SP No.3
BOT CHORD 2x4 SP No.3
WEBS 2x4 SP No.3
OTHERS 2x4 SP No.3

BRACING-
TOP CHORD Structural wood sheathing directly applied or 6-0-0 oc purlins.
BOT CHORD Rigid ceiling directly applied or 10-0-0 oc bracing.

REACTIONS. All bearings 11-11-0.
(lb) - Max Horz 1=-62(LC 10)
Max Uplift All uplift 100 lb or less at joint(s) 1, 5, 8, 6
Max Grav All reactions 250 lb or less at joint(s) 1, 5 except 7=268(LC 1), 8=296(LC 23), 6=296(LC 24)

FORCES. (lb) - Max. Comp./Max. Ten. - All forces 250 (lb) or less except when shown.

NOTES-
1) Unbalanced roof live loads have been considered for this design.
2) Wind: ASCE 7-16; Vult=120mph (3-second gust) Vasd=95mph; TCDL=6.0psf; BCDL=6.0psf; h=25ft; B=45ft; L=24ft; eave=4ft; Cat. II; Exp B; Enclosed; MWFRS (directional) and C-C Exterior(2E) 0-5-12 to 3-5-12, Interior(1) 3-5-12 to 5-11-14, Exterior(2R) 5-11-14 to 8-11-14, Interior(1) 8-11-14 to 11-6-0 zone; cantilever left and right exposed ; end vertical left and right exposed;C-C for members and forces & MWFRS for reactions shown; Lumber DOL=1.60 plate grip DOL=1.60
3) Gable requires continuous bottom chord bearing.
4) This truss has been designed for a 10.0 psf bottom chord live load nonconcurrent with any other live loads.
5) * This truss has been designed for a live load of 20.0psf on the bottom chord in all areas where a rectangle 3-6-0 tall by 2-0-0 wide will fit between the bottom chord and any other members.
6) N/A

7) N/A

8) This truss is designed in accordance with the 2018 International Residential Code sections R502.11.1 and R802.10.2 and referenced standard ANSI/TPI 1.

October 27,2021

WARNING - Verify design parameters and READ NOTES ON THIS AND INCLUDED MITEK REFERENCE PAGE MII-7473 rev. 5/19/2020 BEFORE USE.
Design valid for use only with MiTek® connectors. This design is based only upon parameters shown, and is for an individual building component, not a truss system. Before use, the building designer must verify the applicability of design parameters and properly incorporate this design into the overall building design. Bracing indicated is to prevent buckling of individual truss web and/or chord members only. Additional temporary and permanent bracing is always required for stability and to prevent collapse with possible personal injury and property damage. For general guidance regarding the fabrication, storage, delivery, erection and bracing of trusses and truss systems, see **ANSI/TPI1 Quality Criteria, DSB-89 and BCSI Building Component Safety Information** available from Truss Plate Institute, 2670 Crain Highway, Suite 203 Waldorf, MD 20601

ENGINEERING BY TRENCO A MiTek Affiliate
818 Soundside Road
Edenton, NC 27932

Job	Truss	Truss Type	Qty	Ply	KB Home 149.2115.C Vol ceiling and tray
149_2115_C_VO_T	VA5	GABLE	1	1	I48539531 Job Reference (optional)

84 Components (Dunn), Dunn, NC - 28334, 8.520 s Aug 27 2021 MiTek Industries, Inc. Wed Oct 27 08:08:36 2021 Page 1
ID:bNZHYySm82JAWDNgfw9uCLzLbIt-2nzY6xLPZRdQZg_bPKJDNQ4W0MMT7HJx5mIjf1yPGqf

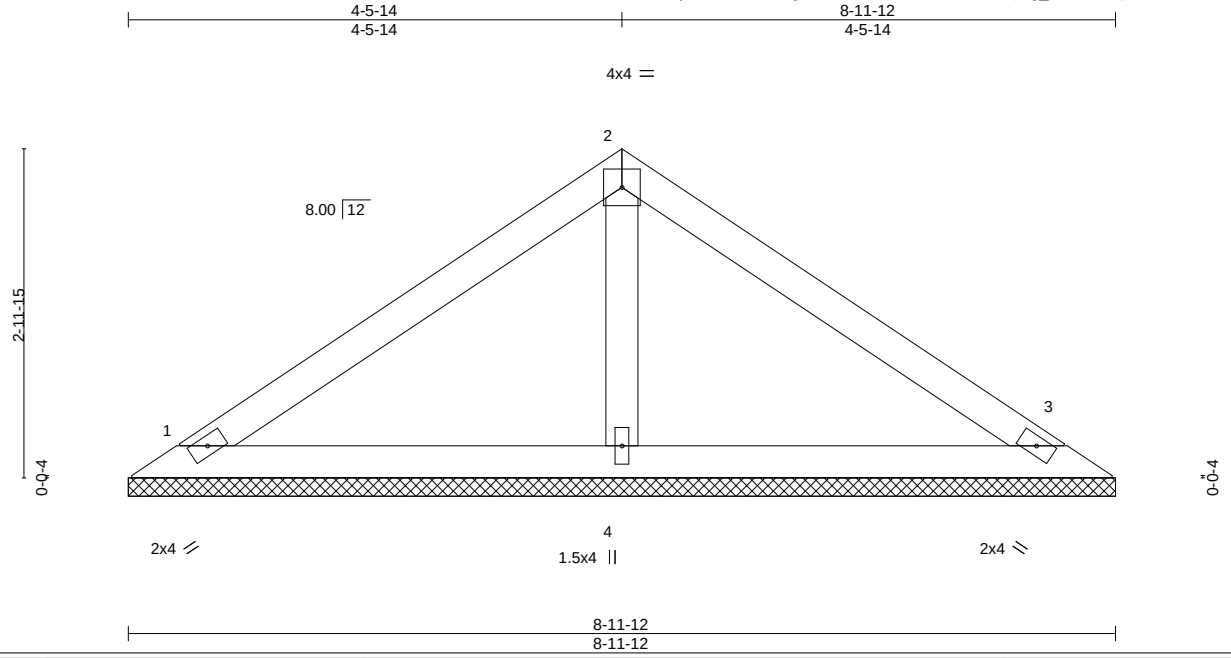

LOADING (psf)			SPACING- 2-0-0		CSI.		DEFL.	in	(loc)	l/defl	L/d	PLATES	GRIP
TCLL	20.0		Plate Grip DOL	1.15	TC	0.53	Vert(LL)	n/a	-	n/a	999	MT20	244/190
TCDL	10.0		Lumber DOL	1.15	BC	0.27	Vert(CT)	n/a	-	n/a	999		
BCLL	0.0	*	Rep Stress Incr	YES	WB	0.05	Horz(CT)	0.00	3	n/a	n/a		
BCDL	10.0		Code IRC2018/TPI2014		Matrix-P							Weight: 31 lb	FT = 20%

LUMBER-
TOP CHORD 2x4 SP No.3
BOT CHORD 2x4 SP No.3
OTHERS 2x4 SP No.3

BRACING-
TOP CHORD Structural wood sheathing directly applied or 6-0-0 oc purlins.
BOT CHORD Rigid ceiling directly applied or 10-0-0 oc bracing.

REACTIONS. (size) 1=8-11-12, 3=8-11-12, 4=8-11-12
Max Horz 1=45(LC 11)
Max Uplift 1=-18(LC 12), 3=-18(LC 12)
Max Grav 1=172(LC 1), 3=172(LC 1), 4=298(LC 1)

FORCES. (lb) - Max. Comp./Max. Ten. - All forces 250 (lb) or less except when shown.

NOTES-
1) Unbalanced roof live loads have been considered for this design.
2) Wind: ASCE 7-16; Vult=120mph (3-second gust) Vasd=95mph; TCDL=6.0psf; BCDL=6.0psf; h=25ft; B=45ft; L=24ft; eave=4ft; Cat. II; Exp B; Enclosed; MWFRS (directional) and C-C Exterior(2E) 0-5-12 to 3-5-12, Interior(1) 3-5-12 to 4-5-14, Exterior(2R) 4-5-14 to 7-5-14, Interior(1) 7-5-14 to 8-6-0 zone;C-C for members and forces & MWFRS for reactions shown; Lumber DOL=1.60 plate grip DOL=1.60
3) Gable requires continuous bottom chord bearing.
4) This truss has been designed for a 10.0 psf bottom chord live load nonconcurrent with any other live loads.
5) * This truss has been designed for a live load of 20.0psf on the bottom chord in all areas where a rectangle 3-6-0 tall by 2-0-0 wide will fit between the bottom chord and any other members.
6) N/A

7) This truss is designed in accordance with the 2018 International Residential Code sections R502.11.1 and R802.10.2 and referenced standard ANSI/TPI 1.

October 27,2021

WARNING - Verify design parameters and READ NOTES ON THIS AND INCLUDED MITEK REFERENCE PAGE MII-7473 rev. 5/19/2020 BEFORE USE.
Design valid for use only with MiTek® connectors. This design is based only upon parameters shown, and is for an individual building component, not a truss system. Before use, the building designer must verify the applicability of design parameters and properly incorporate this design into the overall building design. Bracing indicated is to prevent buckling of individual truss web and/or chord members only. Additional temporary and permanent bracing is always required for stability and to prevent collapse with possible personal injury and property damage. For general guidance regarding the fabrication, storage, delivery, erection and bracing of trusses and truss systems, see **ANSI/TPI1 Quality Criteria, DSB-89 and BCSI Building Component Safety Information** available from Truss Plate Institute, 2670 Crain Highway, Suite 203 Waldorf, MD 20601

ENGINEERING BY TRENCO A MiTek Affiliate
818 Soundside Road
Edenton, NC 27932

Job	Truss	Truss Type	Qty	Ply	KB Home 149.2115.C Vol ceiling and tray
149_2115_C_VO_T	VA6	Valley	1	1	I48539532 Job Reference (optional)

84 Components (Dunn), Dunn, NC - 28334, 8.520 s Aug 27 2021 MiTek Industries, Inc. Wed Oct 27 08:08:37 2021 Page 1
ID:bNZHYySm82JAWDNgfw9uCLzLbIt-WzXwJHL1KklHBqZoy1qSwedn?mkIskt4JQ1HCTyPGqe

Scale = 1:15.5

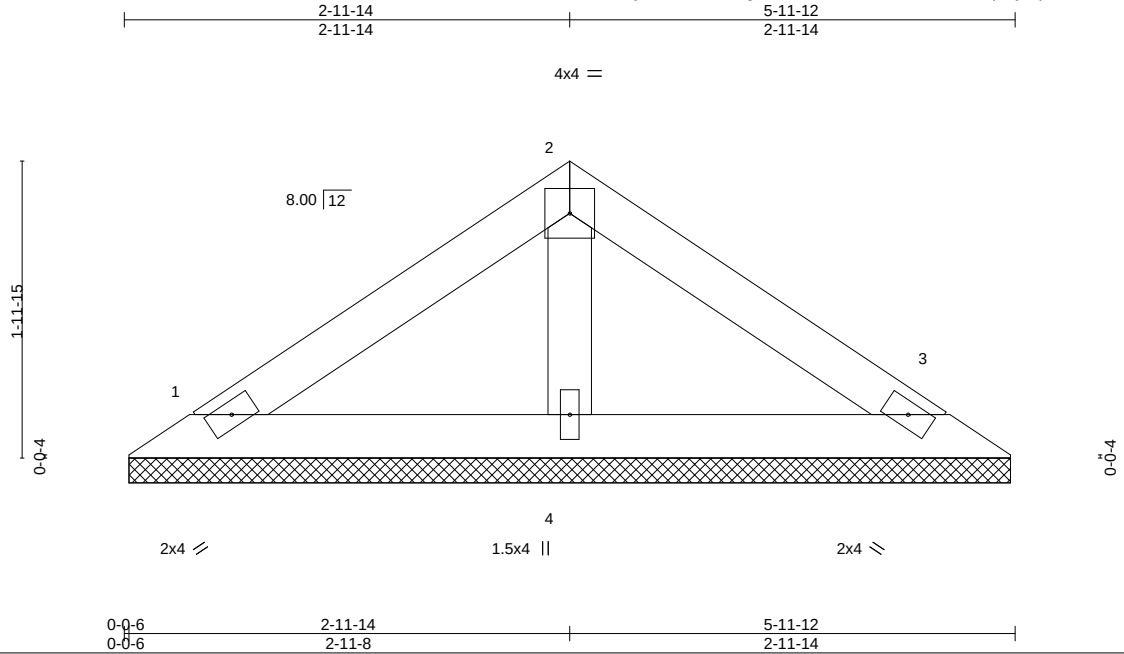

LOADING (psf)			SPACING- 2-0-0		CSI.		DEFL. in (loc) l/defl L/d					PLATES	GRIP
TCLL	20.0		Plate Grip DOL	1.15	TC	0.19	Vert(LL)	n/a	-	n/a	999	MT20	244/190
TCDL	10.0		Lumber DOL	1.15	BC	0.11	Vert(CT)	n/a	-	n/a	999		
BCLL	0.0	*	Rep Stress Incr	YES	WB	0.03	Horz(CT)	0.00	3	n/a	n/a		
BCDL	10.0		Code IRC2018/TPI2014		Matrix-P							Weight: 20 lb	FT = 20%

LUMBER-
TOP CHORD 2x4 SP No.3
BOT CHORD 2x4 SP No.3
WEBS 2x4 SP No.3

BRACING-
TOP CHORD Structural wood sheathing directly applied or 5-11-12 oc purlins.
BOT CHORD Rigid ceiling directly applied or 10-0-0 oc bracing.

REACTIONS. (size) 1=5-11-0, 3=5-11-0, 4=5-11-0
Max Horz 1=-28(LC 10)
Max Uplift 1=-11(LC 12), 3=-11(LC 12)
Max Grav 1=107(LC 1), 3=107(LC 1), 4=186(LC 1)

FORCES. (lb) - Max. Comp./Max. Ten. - All forces 250 (lb) or less except when shown.

NOTES-
1) Unbalanced roof live loads have been considered for this design.
2) Wind: ASCE 7-16; Vult=120mph (3-second gust) Vasd=95mph; TCDL=6.0psf; BCDL=6.0psf; h=25ft; B=45ft; L=24ft; eave=4ft; Cat. II; Exp B; Enclosed; MWFRS (directional) and C-C Exterior(2E) zone;C-C for members and forces & MWFRS for reactions shown; Lumber DOL=1.60 plate grip DOL=1.60
3) Gable requires continuous bottom chord bearing.
4) This truss has been designed for a 10.0 psf bottom chord live load nonconcurrent with any other live loads.
5) * This truss has been designed for a live load of 20.0psf on the bottom chord in all areas where a rectangle 3-6-0 tall by 2-0-0 wide will fit between the bottom chord and any other members.
6) N/A

7) This truss is designed in accordance with the 2018 International Residential Code sections R502.11.1 and R802.10.2 and referenced standard ANSI/TPI 1.

October 27,2021

WARNING - Verify design parameters and READ NOTES ON THIS AND INCLUDED MITEK REFERENCE PAGE MII-7473 rev. 5/19/2020 BEFORE USE.
Design valid for use only with MiTek® connectors. This design is based only upon parameters shown, and is for an individual building component, not a truss system. Before use, the building designer must verify the applicability of design parameters and properly incorporate this design into the overall building design. Bracing indicated is to prevent buckling of individual truss web and/or chord members only. Additional temporary and permanent bracing is always required for stability and to prevent collapse with possible personal injury and property damage. For general guidance regarding the fabrication, storage, delivery, erection and bracing of trusses and truss systems, see **ANSI/TPI1 Quality Criteria, DSB-89 and BCSI Building Component Safety Information** available from Truss Plate Institute, 2670 Crain Highway, Suite 203 Waldorf, MD 20601

ENGINEERING BY TRENCO A MiTek Affiliate
818 Soundside Road
Edenton, NC 27932

Job	Truss	Truss Type	Qty	Ply	KB Home 149.2115.C Vol ceiling and tray
149_2115_C_VO_T	VA7	Valley	1	1	I48539533 Job Reference (optional)

84 Components (Dunn), Dunn, NC - 28334, 8.520 s Aug 27 2021 MiTek Industries, Inc. Wed Oct 27 08:08:38 2021 Page 1
ID:bNZHYySm82JAWDNgfw9uCLzLbIt-_A5IXdMg52t8o_8_WlLhSr9zHA4?bBWEY4nqkwyPGqd

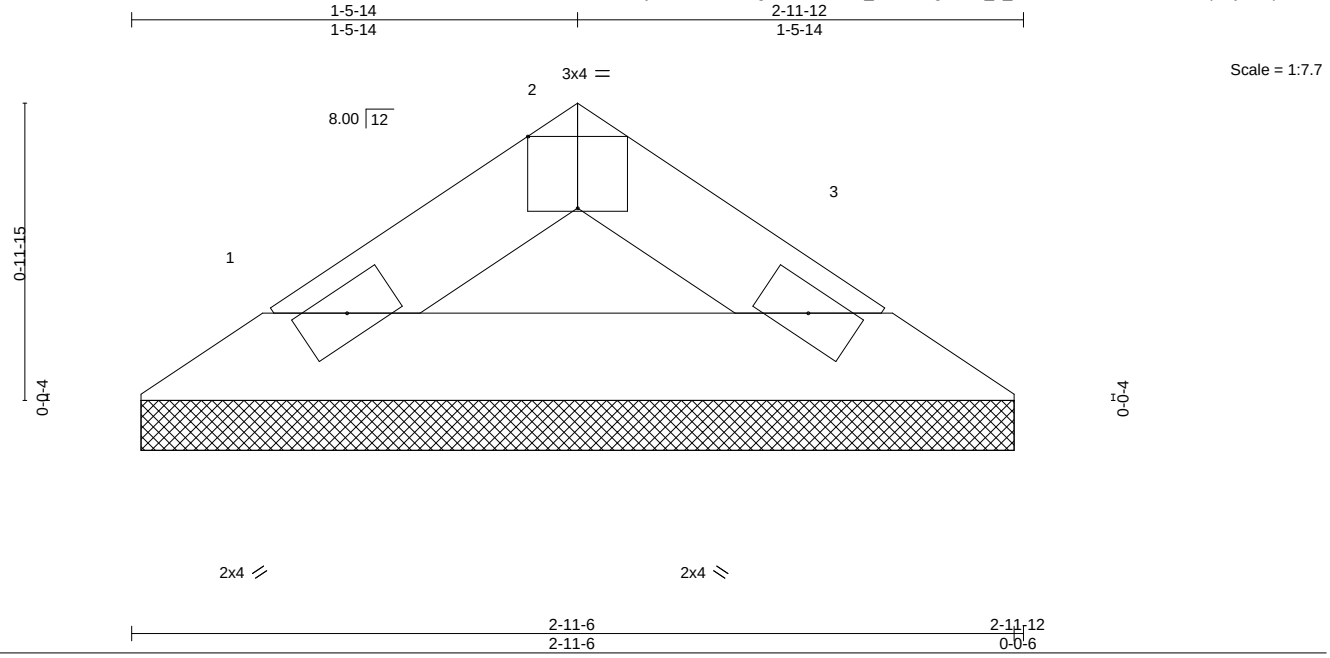

Plate Offsets (X,Y)-- [2:0-2-0,Edge]

LOADING (psf)		SPACING- 2-0-0		CSI.		DEFL. in (loc) l/defl L/d		PLATES GRIP
TCLL	20.0	Plate Grip DOL	1.15	TC	0.03	Vert(LL) n/a - n/a 999		MT20 244/190
TCDL	10.0	Lumber DOL	1.15	BC	0.08	Vert(CT) n/a - n/a 999		
BCLL	0.0 *	Rep Stress Incr	YES	WB	0.00	Horz(CT) 0.00 3 n/a n/a		
BCDL	10.0	Code IRC2018/TPI2014		Matrix-P				Weight: 8 lb FT = 20%

LUMBER-
TOP CHORD 2x4 SP No.3
BOT CHORD 2x4 SP No.3

BRACING-
TOP CHORD Structural wood sheathing directly applied or 2-11-12 oc purlins.
BOT CHORD Rigid ceiling directly applied or 10-0-0 oc bracing.

REACTIONS. (size) 1=2-11-0, 3=2-11-0
Max Horz 1=-11(LC 10)
Max Uplift 1=-1(LC 12), 3=-1(LC 12)
Max Grav 1=81(LC 1), 3=81(LC 1)

FORCES. (lb) - Max. Comp./Max. Ten. - All forces 250 (lb) or less except when shown.

NOTES-
1) Unbalanced roof live loads have been considered for this design.
2) Wind: ASCE 7-16; Vult=120mph (3-second gust) Vasd=95mph; TCDL=6.0psf; BCDL=6.0psf; h=25ft; B=45ft; L=24ft; eave=4ft; Cat. II; Exp B; Enclosed; MWFRS (directional) and C-C Exterior(2E) zone;C-C for members and forces & MWFRS for reactions shown; Lumber DOL=1.60 plate grip DOL=1.60
3) Gable requires continuous bottom chord bearing.
4) This truss has been designed for a 10.0 psf bottom chord live load nonconcurrent with any other live loads.
5) * This truss has been designed for a live load of 20.0psf on the bottom chord in all areas where a rectangle 3-6-0 tall by 2-0-0 wide will fit between the bottom chord and any other members.
6) N/A

7) This truss is designed in accordance with the 2018 International Residential Code sections R502.11.1 and R802.10.2 and referenced standard ANSI/TPI 1.

October 27,2021

WARNING - Verify design parameters and READ NOTES ON THIS AND INCLUDED MITEK REFERENCE PAGE MII-7473 rev. 5/19/2020 BEFORE USE.
Design valid for use only with MiTek® connectors. This design is based only upon parameters shown, and is for an individual building component, not a truss system. Before use, the building designer must verify the applicability of design parameters and properly incorporate this design into the overall building design. Bracing indicated is to prevent buckling of individual truss web and/or chord members only. Additional temporary and permanent bracing is always required for stability and to prevent collapse with possible personal injury and property damage. For general guidance regarding the fabrication, storage, delivery, erection and bracing of trusses and truss systems, see **ANSI/TPI1 Quality Criteria, DSB-89 and BCSI Building Component Safety Information** available from Truss Plate Institute, 2670 Crain Highway, Suite 203 Waldorf, MD 20601

ENGINEERING BY TRENCO A MiTek Affiliate
818 Soundside Road
Edenton, NC 27932

Job	Truss	Truss Type	Qty	Ply	KB Home 149.2115.C Vol ceiling and tray
149_2115_C_VO_T	VB1	Valley	1	1	I48539534 Job Reference (optional)

84 Components (Dunn), Dunn, NC - 28334, 8.520 s Aug 27 2021 MiTek Industries, Inc. Wed Oct 27 08:08:39 2021 Page 1
ID:bNZHYySm82JAWDNgfw9uCLzLbIt-SMfhkzNIsM??Q7jA4Ssw?3i53aPjKcpNnkWNGMyPGqc

Scale = 1:43.6

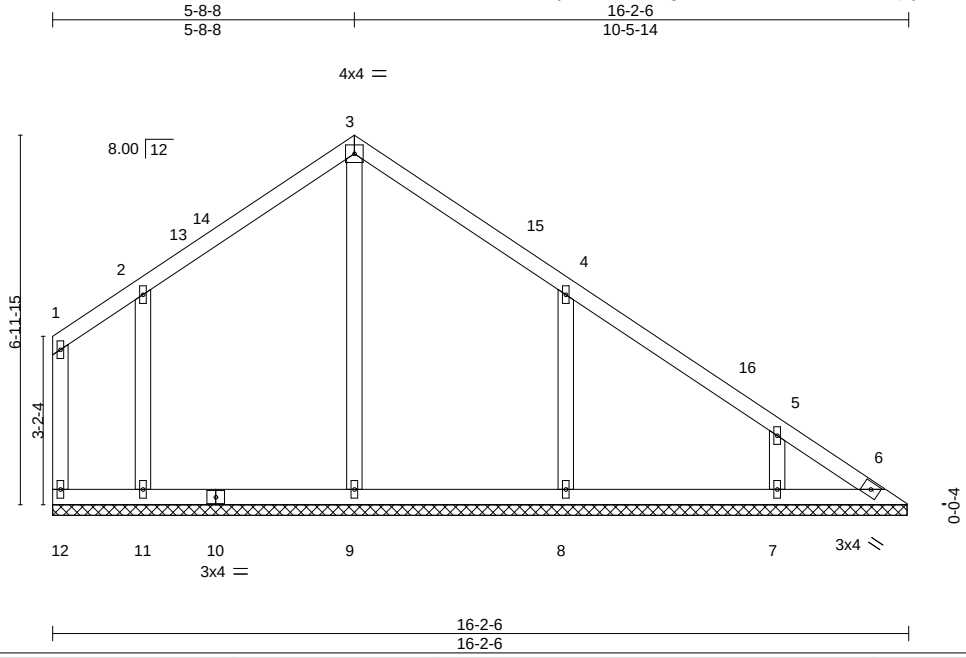

LOADING (psf)			SPACING-	2-0-0	CSI.		DEFL.	in	(loc)	l/defl	L/d	PLATES	GRIP
TCLL	20.0		Plate Grip DOL	1.15	TC	0.22	Vert(LL)	n/a	-	n/a	999	MT20	197/144
TCDL	10.0		Lumber DOL	1.15	BC	0.18	Vert(CT)	n/a	-	n/a	999		
BCLL	0.0	*	Rep Stress Incr	YES	WB	0.19	Horz(CT)	0.00	6	n/a	n/a		
BCDL	10.0		Code IRC2018/TPI2014		Matrix-S							Weight: 79 lb	FT = 20%

LUMBER-
TOP CHORD 2x4 SP No.2 or 2x4 SPF No.2
BOT CHORD 2x4 SP No.2 or 2x4 SPF No.2
WEBS 2x4 SP No.3
OTHERS 2x4 SP No.3

BRACING-
TOP CHORD Structural wood sheathing directly applied or 6-0-0 oc purlins, except end verticals.
BOT CHORD Rigid ceiling directly applied or 6-0-0 oc bracing.

REACTIONS. All bearings 16-2-0.
(lb) - Max Horz 12=-151(LC 10)
Max Uplift All uplift 100 lb or less at joint(s) 12, 6, 11, 8, 7
Max Grav All reactions 250 lb or less at joint(s) 12, 6 except 9=431(LC 18), 11=383(LC 17), 8=435(LC 18), 7=313(LC 18)

FORCES. (lb) - Max. Comp./Max. Ten. - All forces 250 (lb) or less except when shown.
WEBS 4-8=-267/120

NOTES-
1) Unbalanced roof live loads have been considered for this design.
2) Wind: ASCE 7-16; Vult=120mph (3-second gust) Vasd=95mph; TCDL=6.0psf; BCDL=6.0psf; h=25ft; B=45ft; L=24ft; eave=4ft; Cat. II; Exp B; Enclosed; MWFRS (directional) and C-C Exterior(2E) 0-1-12 to 3-1-12, Interior(1) 3-1-12 to 5-8-8, Exterior(2R) 5-8-8 to 8-8-8, Interior(1) 8-8-8 to 15-8-10 zone; cantilever left and right exposed ; end vertical left and right exposed;C-C for members and forces & MWFRS for reactions shown; Lumber DOL=1.60 plate grip DOL=1.60
3) All plates are 1.5x4 MT20 unless otherwise indicated.
4) Gable requires continuous bottom chord bearing.
5) This truss has been designed for a 10.0 psf bottom chord live load nonconcurrent with any other live loads.
6) * This truss has been designed for a live load of 20.0psf on the bottom chord in all areas where a rectangle 3-6-0 tall by 2-0-0 wide will fit between the bottom chord and any other members, with BCDL = 10.0psf.
7) N/A

8) N/A

9) This truss is designed in accordance with the 2018 International Residential Code sections R502.11.1 and R802.10.2 and referenced standard ANSI/TPI 1.

October 27,2021

WARNING - Verify design parameters and READ NOTES ON THIS AND INCLUDED MITEK REFERENCE PAGE MII-7473 rev. 5/19/2020 BEFORE USE.
Design valid for use only with MiTek® connectors. This design is based only upon parameters shown, and is for an individual building component, not a truss system. Before use, the building designer must verify the applicability of design parameters and properly incorporate this design into the overall building design. Bracing indicated is to prevent buckling of individual truss web and/or chord members only. Additional temporary and permanent bracing is always required for stability and to prevent collapse with possible personal injury and property damage. For general guidance regarding the fabrication, storage, delivery, erection and bracing of trusses and truss systems, see **ANSI/TPI1 Quality Criteria, DSB-89 and BCSI Building Component Safety Information** available from Truss Plate Institute, 2670 Crain Highway, Suite 203 Waldorf, MD 20601

ENGINEERING BY TRENCO A MiTek Affiliate
818 Soundside Road
Edenton, NC 27932

Job	Truss	Truss Type	Qty	Ply	KB Home 149.2115.C Vol ceiling and tray
149_2115_C_VO_T	VB2	Valley	1	1	I48539535 Job Reference (optional)

84 Components (Dunn), Dunn, NC - 28334, 8.520 s Aug 27 2021 MiTek Industries, Inc. Wed Oct 27 08:08:40 2021 Page 1
ID:bNZHYySm82JAWDNgfw9uCLzLbIt-wYD3xJOwdf7s2HINeAN9YGFCtzl?33xX0OGxpoyPGqb

Scale = 1:38.5

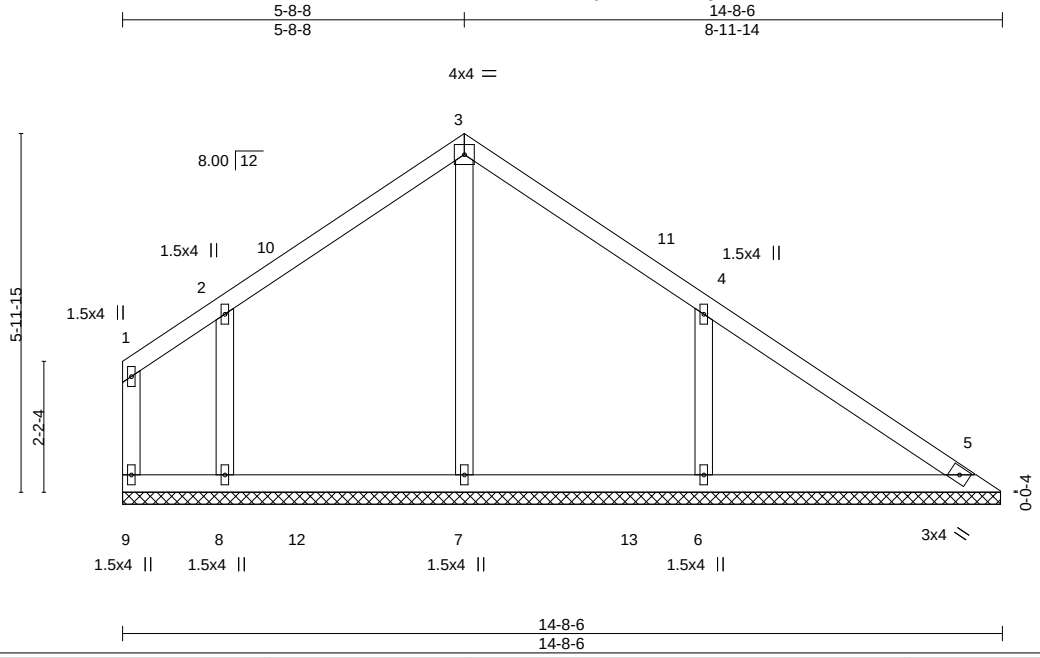

LOADING (psf)			SPACING-	2-0-0	CSI.		DEFL.	in	(loc)	l/defl	L/d	PLATES	GRIP
TCLL	20.0		Plate Grip DOL	1.15	TC	0.47	Vert(LL)	n/a	-	n/a	999	MT20	197/144
TCDL	10.0		Lumber DOL	1.15	BC	0.17	Vert(CT)	n/a	-	n/a	999		
BCLL	0.0	*	Rep Stress Incr	YES	WB	0.13	Horz(CT)	0.00	5	n/a	n/a		
BCDL	10.0		Code IRC2018/TPI2014		Matrix-S							Weight: 66 lb	FT = 20%

LUMBER-
TOP CHORD 2x4 SP No.3
BOT CHORD 2x4 SP No.2 or 2x4 SPF No.2
WEBS 2x4 SP No.3
OTHERS 2x4 SP No.3

BRACING-
TOP CHORD Structural wood sheathing directly applied or 6-0-0 oc purlins, except end verticals.
BOT CHORD Rigid ceiling directly applied or 6-0-0 oc bracing.

REACTIONS. All bearings 14-8-0.
(lb) - Max Horz 9=-121(LC 10)
Max Uplift All uplift 100 lb or less at joint(s) 9, 8, 6
Max Grav All reactions 250 lb or less at joint(s) 9, 5 except 7=401(LC 18), 8=372(LC 17), 6=489(LC 18)

FORCES. (lb) - Max. Comp./Max. Ten. - All forces 250 (lb) or less except when shown.
WEBS 4-6=-303/145

NOTES-
1) Unbalanced roof live loads have been considered for this design.
2) Wind: ASCE 7-16; Vult=120mph (3-second gust) Vasd=95mph; TCDL=6.0psf; BCDL=6.0psf; h=25ft; B=45ft; L=24ft; eave=4ft; Cat. II; Exp B; Enclosed; MWFRS (directional) and C-C Exterior(2E) 0-1-12 to 3-1-12, Interior(1) 3-1-12 to 5-8-8, Exterior(2R) 5-8-8 to 8-8-8, Interior(1) 8-8-8 to 14-2-10 zone; cantilever left and right exposed ; end vertical left and right exposed;C-C for members and forces & MWFRS for reactions shown; Lumber DOL=1.60 plate grip DOL=1.60
3) Gable requires continuous bottom chord bearing.
4) This truss has been designed for a 10.0 psf bottom chord live load nonconcurrent with any other live loads.
5) * This truss has been designed for a live load of 20.0psf on the bottom chord in all areas where a rectangle 3-6-0 tall by 2-0-0 wide will fit between the bottom chord and any other members, with BCDL = 10.0psf.
6) N/A

7) This truss is designed in accordance with the 2018 International Residential Code sections R502.11.1 and R802.10.2 and referenced standard ANSI/TPI 1.

October 27,2021

WARNING - Verify design parameters and READ NOTES ON THIS AND INCLUDED MITEK REFERENCE PAGE MII-7473 rev. 5/19/2020 BEFORE USE.
Design valid for use only with MiTek® connectors. This design is based only upon parameters shown, and is for an individual building component, not a truss system. Before use, the building designer must verify the applicability of design parameters and properly incorporate this design into the overall building design. Bracing indicated is to prevent buckling of individual truss web and/or chord members only. Additional temporary and permanent bracing is always required for stability and to prevent collapse with possible personal injury and property damage. For general guidance regarding the fabrication, storage, delivery, erection and bracing of trusses and truss systems, see **ANSI/TPI1 Quality Criteria, DSB-89 and BCSI Building Component Safety Information** available from Truss Plate Institute, 2670 Crain Highway, Suite 203 Waldorf, MD 20601

ENGINEERING BY TRENCO A MiTek Affiliate
818 Soundside Road
Edenton, NC 27932

Job	Truss	Truss Type	Qty	Ply	KB Home 149.2115.C Vol ceiling and tray
149_2115_C_VO_T	VB3	Valley	1	1	I48539536 Job Reference (optional)

84 Components (Dunn), Dunn, NC - 28334, 8.520 s Aug 27 2021 MiTek Industries, Inc. Wed Oct 27 08:08:42 2021 Page 1
ID:bNZHYySm82JAWDNgfw9uCLzLbIt-sxLpM?PA8HNaHbRllaQddhKaanSMW_0qTil1thyPGqZ

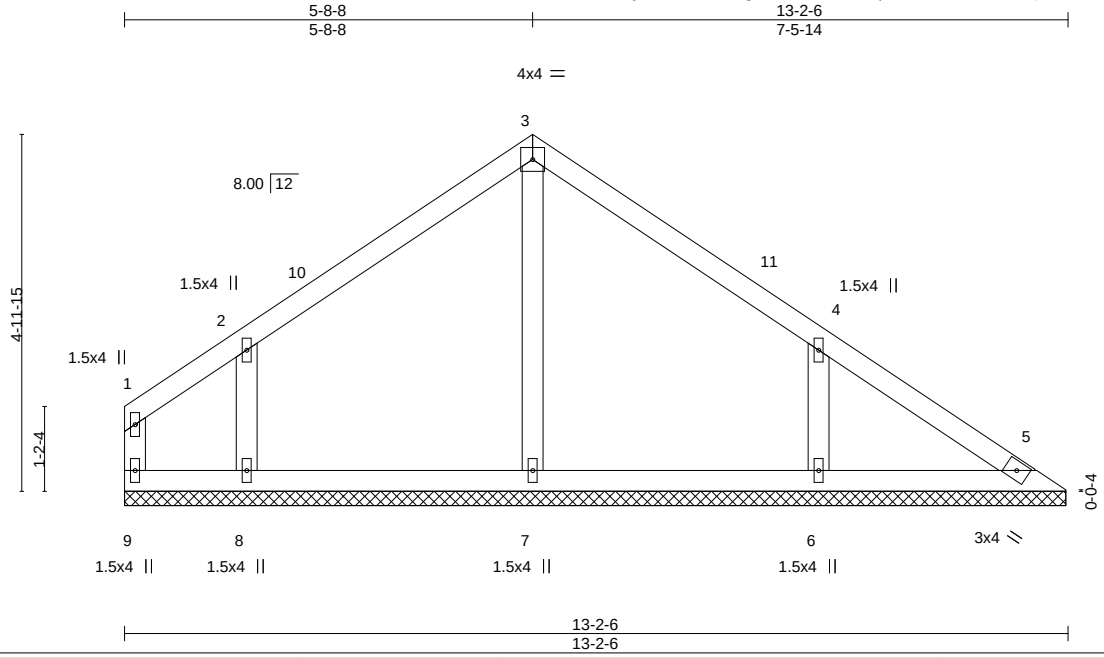

LOADING (psf)			SPACING- 2-0-0		CSI.		DEFL.	in	(loc)	l/defl	L/d	PLATES	GRIP
TCLL	20.0		Plate Grip DOL	1.15	TC	0.33	Vert(LL)	n/a	-	n/a	999	MT20	197/144
TCDL	10.0		Lumber DOL	1.15	BC	0.12	Vert(CT)	n/a	-	n/a	999		
BCLL	0.0	*	Rep Stress Incr	YES	WB	0.10	Horz(CT)	0.00	5	n/a	n/a		
BCDL	10.0		Code IRC2018/TPI2014		Matrix-S							Weight: 55 lb	FT = 20%

LUMBER-
TOP CHORD 2x4 SP No.3
BOT CHORD 2x4 SP No.2 or 2x4 SPF No.2
WEBS 2x4 SP No.3
OTHERS 2x4 SP No.3

BRACING-
TOP CHORD Structural wood sheathing directly applied or 6-0-0 oc purlins, except end verticals.
BOT CHORD Rigid ceiling directly applied or 10-0-0 oc bracing.

REACTIONS. All bearings 13-2-0.
(lb) - Max Horz 9=-92(LC 10)
Max Uplift All uplift 100 lb or less at joint(s) 9, 8, 6
Max Grav All reactions 250 lb or less at joint(s) 9, 5 except 7=299(LC 1), 8=297(LC 17), 6=331(LC 24)

FORCES. (lb) - Max. Comp./Max. Ten. - All forces 250 (lb) or less except when shown.
WEBS 4-6=-252/134

NOTES-
1) Unbalanced roof live loads have been considered for this design.
2) Wind: ASCE 7-16; Vult=120mph (3-second gust) Vasd=95mph; TCDL=6.0psf; BCDL=6.0psf; h=25ft; B=45ft; L=24ft; eave=4ft; Cat. II; Exp B; Enclosed; MWFRS (directional) and C-C Exterior(2E) 0-1-12 to 3-1-12, Interior(1) 3-1-12 to 5-8-8, Exterior(2R) 5-8-8 to 8-8-8, Interior(1) 8-8-8 to 12-8-10 zone; cantilever left and right exposed ; end vertical left and right exposed;C-C for members and forces & MWFRS for reactions shown; Lumber DOL=1.60 plate grip DOL=1.60
3) Gable requires continuous bottom chord bearing.
4) This truss has been designed for a 10.0 psf bottom chord live load nonconcurrent with any other live loads.
5) * This truss has been designed for a live load of 20.0psf on the bottom chord in all areas where a rectangle 3-6-0 tall by 2-0-0 wide will fit between the bottom chord and any other members.
6) N/A

7) This truss is designed in accordance with the 2018 International Residential Code sections R502.11.1 and R802.10.2 and referenced standard ANSI/TPI 1.

October 27,2021

WARNING - Verify design parameters and READ NOTES ON THIS AND INCLUDED MITEK REFERENCE PAGE MII-7473 rev. 5/19/2020 BEFORE USE.
Design valid for use only with MiTek® connectors. This design is based only upon parameters shown, and is for an individual building component, not a truss system. Before use, the building designer must verify the applicability of design parameters and properly incorporate this design into the overall building design. Bracing indicated is to prevent buckling of individual truss web and/or chord members only. Additional temporary and permanent bracing is always required for stability and to prevent collapse with possible personal injury and property damage. For general guidance regarding the fabrication, storage, delivery, erection and bracing of trusses and truss systems, see **ANSI/TPI1 Quality Criteria, DSB-89 and BCSI Building Component Safety Information** available from Truss Plate Institute, 2670 Crain Highway, Suite 203 Waldorf, MD 20601

ENGINEERING BY TRENCO A MiTek Affiliate
818 Soundside Road
Edenton, NC 27932

Job	Truss	Truss Type	Qty	Ply	KB Home 149.2115.C Vol ceiling and tray
149_2115_C_VO_T	VB4	Valley	1	1	I48539537 Job Reference (optional)

8.520 s Aug 27 2021 MiTek Industries, Inc. Wed Oct 27 09:32:17 2021 Page 1
ID:bNZHYySm82JAWDNgfw9uCLzLbIt-nk8gk9ZD67rU0uT4CIeavlXa0MzT26f_gR3vPWyPFcC

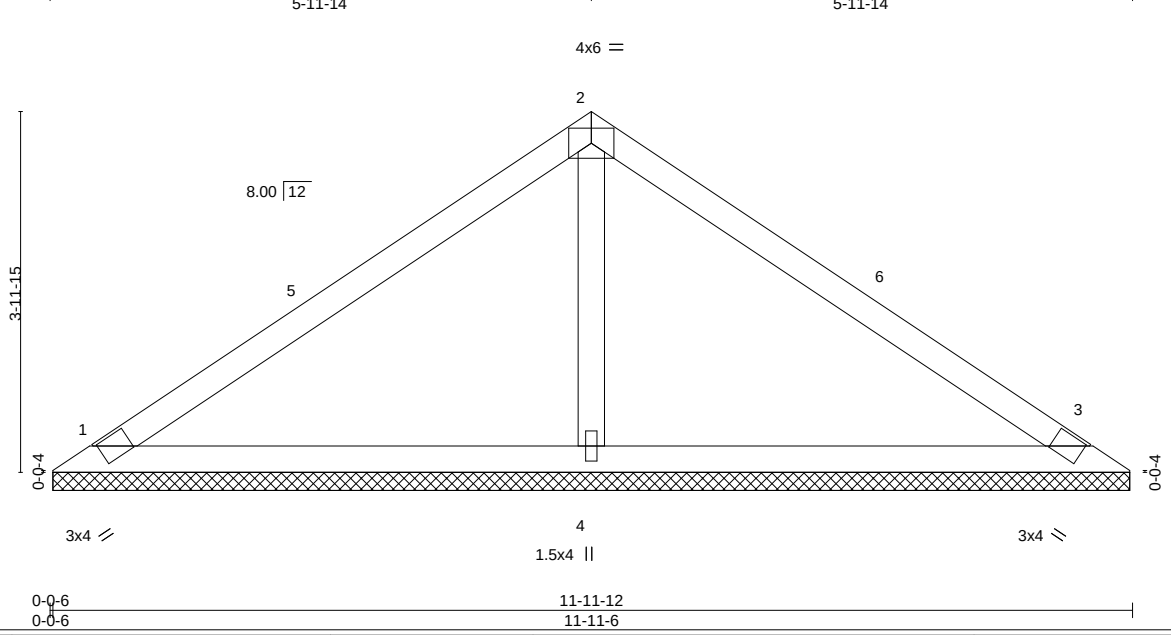

LOADING (psf)		SPACING- 2-0-0		CSI.		DEFL.	in	(loc)	l/defl	L/d	PLATES	GRIP
TCLL	20.0	Plate Grip DOL	1.15	TC	0.45	Vert(LL)	n/a	-	n/a	999	MT20	197/144
TCDL	10.0	Lumber DOL	1.15	BC	0.51	Vert(CT)	n/a	-	n/a	999		
BCLL	0.0 *	Rep Stress Incr	YES	WB	0.09	Horz(CT)	0.00	3	n/a	n/a		
BCDL	10.0	Code IRC2018/TPI2014		Matrix-S							Weight: 42 lb	FT = 20%

LUMBER-
TOP CHORD 2x4 SP No.2 or 2x4 SPF No.2
BOT CHORD 2x4 SP No.3
OTHERS 2x4 SP No.3

BRACING-
TOP CHORD Structural wood sheathing directly applied or 6-0-0 oc purlins.
BOT CHORD Rigid ceiling directly applied or 10-0-0 oc bracing.

REACTIONS. (lb/size) 1=216/11-11-0 (min. 0-1-8), 3=216/11-11-0 (min. 0-1-8), 4=449/11-11-0 (min. 0-1-8)
Max Horz 1=-62(LC 10)
Max Uplift 1=-16(LC 12), 3=-16(LC 12)

FORCES. (lb) - Max. Comp./Max. Ten. - All forces 250 (lb) or less except when shown.
WEBS 2-4=-287/78

NOTES-
1) Unbalanced roof live loads have been considered for this design.
2) Wind: ASCE 7-16; Vult=120mph (3-second gust) Vasd=95mph; TCDL=6.0psf; BCDL=6.0psf; h=25ft; B=45ft; L=24ft; eave=4ft; Cat. II; Exp B; Enclosed; MWFRS (directional) and C-C Exterior(2E) 0-5-12 to 3-5-12, Interior(1) 3-5-12 to 5-11-14, Exterior(2R) 5-11-14 to 8-11-14, Interior(1) 8-11-14 to 11-6-0 zone; cantilever left and right exposed ; end vertical left and right exposed;C-C for members and forces & MWFRS for reactions shown; Lumber DOL=1.60 plate grip DOL=1.60
3) Gable requires continuous bottom chord bearing.
4) This truss has been designed for a 10.0 psf bottom chord live load nonconcurrent with any other live loads.
5) * This truss has been designed for a live load of 20.0psf on the bottom chord in all areas where a rectangle 3-6-0 tall by 2-0-0 wide will fit between the bottom chord and any other members.
6) N/A

7) This truss is designed in accordance with the 2018 International Residential Code sections R502.11.1 and R802.10.2 and referenced standard ANSI/TPI 1.

LOAD CASE(S)
1) Dead + Roof Live (balanced): Lumber Increase=1.15, Plate Increase=1.15
Uniform Loads (plf)
Vert: 1-2=-60, 2-3=-60, 1-3=-20
2) Dead + 0.75 Roof Live (balanced): Lumber Increase=1.15, Plate Increase=1.15
Uniform Loads (plf)
Vert: 1-2=-50, 2-3=-50, 1-3=-20
3) Dead + Uninhabitable Attic Without Storage: Lumber Increase=1.25, Plate Increase=1.25
Uniform Loads (plf)
Vert: 1-2=-20, 2-3=-20, 1-3=-40
4) Dead + 0.6 C-C Wind (Pos. Internal) Case 1: Lumber Increase=1.60, Plate Increase=1.60
Uniform Loads (plf)
Vert: 1-2=21, 2-6=22, 3-6=21, 1-3=-12
Horz: 1-2=-33, 2-6=34, 3-6=33

October 27,2021

Continued on page 2

WARNING - Verify design parameters and READ NOTES ON THIS AND INCLUDED MITEK REFERENCE PAGE MII-7473 rev. 5/19/2020 BEFORE USE.
Design valid for use only with MiTek® connectors. This design is based only upon parameters shown, and is for an individual building component, not a truss system. Before use, the building designer must verify the applicability of design parameters and properly incorporate this design into the overall building design. Bracing indicated is to prevent buckling of individual truss web and/or chord members only. Additional temporary and permanent bracing is always required for stability and to prevent collapse with possible personal injury and property damage. For general guidance regarding the fabrication, storage, delivery, erection and bracing of trusses and truss systems, see **ANSI/TPI1 Quality Criteria, DSB-89 and BCSI Building Component Safety Information** available from Truss Plate Institute, 2670 Crain Highway, Suite 203 Waldorf, MD 20601

ENGINEERING BY
TRENCO
A MiTek Affiliate
818 Soundside Road
Edenton, NC 27932

LOAD CASE(S)

5) Dead + 0.6 C-C Wind (Pos. Internal) Case 2: Lumber Increase=1.60, Plate Increase=1.60
Uniform Loads (plf)
Vert: 1-5=21, 2-5=22, 2-3=21, 1-3=-12
Horz: 1-5=-33, 2-5=-34, 2-3=33
6) Dead + 0.6 C-C Wind (Neg. Internal) Case 1: Lumber Increase=1.60, Plate Increase=1.60
Uniform Loads (plf)
Vert: 1-2=-40, 2-3=-40, 1-3=-20
Horz: 1-2=20, 2-3=-20
7) Dead + 0.6 C-C Wind (Neg. Internal) Case 2: Lumber Increase=1.60, Plate Increase=1.60
Uniform Loads (plf)
Vert: 1-2=-40, 2-3=-40, 1-3=-20
Horz: 1-2=20, 2-3=-20
8) Dead + 0.6 MWFRS Wind (Pos. Internal) Left: Lumber Increase=1.60, Plate Increase=1.60
Uniform Loads (plf)
Vert: 1-2=-3, 2-3=5, 1-3=-12
Horz: 1-2=-9, 2-3=17
9) Dead + 0.6 MWFRS Wind (Pos. Internal) Right: Lumber Increase=1.60, Plate Increase=1.60
Uniform Loads (plf)
Vert: 1-2=5, 2-3=-3, 1-3=-12
Horz: 1-2=-17, 2-3=9
10) Dead + 0.6 MWFRS Wind (Neg. Internal) Left: Lumber Increase=1.60, Plate Increase=1.60
Uniform Loads (plf)
Vert: 1-2=-29, 2-3=-12, 1-3=-20
Horz: 1-2=9, 2-3=8
11) Dead + 0.6 MWFRS Wind (Neg. Internal) Right: Lumber Increase=1.60, Plate Increase=1.60
Uniform Loads (plf)
Vert: 1-2=-12, 2-3=-29, 1-3=-20
Horz: 1-2=-8, 2-3=-9
12) Dead + 0.6 MWFRS Wind (Pos. Internal) 1st Parallel: Lumber Increase=1.60, Plate Increase=1.60
Uniform Loads (plf)
Vert: 1-2=13, 2-3=13, 1-3=-12
Horz: 1-2=-25, 2-3=25
13) Dead + 0.6 MWFRS Wind (Pos. Internal) 2nd Parallel: Lumber Increase=1.60, Plate Increase=1.60
Uniform Loads (plf)
Vert: 1-2=4, 2-3=4, 1-3=-12
Horz: 1-2=-16, 2-3=16
14) Dead + 0.6 MWFRS Wind (Neg. Internal) 1st Parallel: Lumber Increase=1.60, Plate Increase=1.60
Uniform Loads (plf)
Vert: 1-2=-21, 2-3=-21, 1-3=-20
Horz: 1-2=1, 2-3=-1
15) Dead + 0.6 MWFRS Wind (Neg. Internal) 2nd Parallel: Lumber Increase=1.60, Plate Increase=1.60
Uniform Loads (plf)
Vert: 1-2=-21, 2-3=-21, 1-3=-20
Horz: 1-2=1, 2-3=-1
16) Dead: Lumber Increase=0.90, Plate Increase=0.90 Plt. metal=0.90
Uniform Loads (plf)
Vert: 1-2=-20, 2-3=-20, 1-3=-20
17) Dead + 0.75 Roof Live (bal.) + 0.75(0.6 MWFRS Wind (Neg. Int) Left): Lumber Increase=1.60, Plate Increase=1.60
Uniform Loads (plf)
Vert: 1-2=-57, 2-3=-44, 1-3=-20
Horz: 1-2=7, 2-3=6
18) Dead + 0.75 Roof Live (bal.) + 0.75(0.6 MWFRS Wind (Neg. Int) Right): Lumber Increase=1.60, Plate Increase=1.60
Uniform Loads (plf)
Vert: 1-2=-44, 2-3=-57, 1-3=-20
Horz: 1-2=-6, 2-3=-7
19) Dead + 0.75 Roof Live (bal.) + 0.75(0.6 MWFRS Wind (Neg. Int) 1st Parallel): Lumber Increase=1.60, Plate Increase=1.60
Uniform Loads (plf)
Vert: 1-2=-51, 2-3=-51, 1-3=-20
Horz: 1-2=1, 2-3=-1
20) Dead + 0.75 Roof Live (bal.) + 0.75(0.6 MWFRS Wind (Neg. Int) 2nd Parallel): Lumber Increase=1.60, Plate Increase=1.60
Uniform Loads (plf)
Vert: 1-2=-51, 2-3=-51, 1-3=-20
Horz: 1-2=1, 2-3=-1
21) Dead + 0.6 C-C Wind Min. Down: Lumber Increase=1.60, Plate Increase=1.60
Uniform Loads (plf)
Vert: 1-2=-28, 2-3=-28, 1-3=-12
Horz: 1-2=16, 2-3=-16
22) Dead + 0.6 C-C Wind Min. Upward: Lumber Increase=1.60, Plate Increase=1.60
Uniform Loads (plf)
Vert: 1-2=4, 2-3=4, 1-3=-12
Horz: 1-2=-16, 2-3=16
23) 1st Dead + Roof Live (unbalanced): Lumber Increase=1.15, Plate Increase=1.15
Uniform Loads (plf)
Vert: 1-2=-60, 2-3=-20, 1-3=-20
24) 2nd Dead + Roof Live (unbalanced): Lumber Increase=1.15, Plate Increase=1.15
Uniform Loads (plf)
Vert: 1-2=-20, 2-3=-60, 1-3=-20

Continued on page 3

WARNING - Verify design parameters and READ NOTES ON THIS AND INCLUDED MITEK REFERENCE PAGE MII-7473 rev. 5/19/2020 BEFORE USE.
Design valid for use only with MiTek® connectors. This design is based only upon parameters shown, and is for an individual building component, not a truss system. Before use, the building designer must verify the applicability of design parameters and properly incorporate this design into the overall building design. Bracing indicated is to prevent buckling of individual truss web and/or chord members only. Additional temporary and permanent bracing is always required for stability and to prevent collapse with possible personal injury and property damage. For general guidance regarding the fabrication, storage, delivery, erection and bracing of trusses and truss systems, see **ANSI/TPI1 Quality Criteria, DSB-89 and BCSI Building Component Safety Information** available from Truss Plate Institute, 2670 Crain Highway, Suite 203 Waldorf, MD 20601

ENGINEERING BY TRENCO A MiTek Affiliate
818 Soundside Road
Edenton, NC 27932

LOAD CASE(S)

25) 3rd Dead + 0.75 Roof Live (unbalanced): Lumber Increase=1.15, Plate Increase=1.15
Uniform Loads (plf)
Vert: 1-2=-50, 2-3=-20, 1-3=-20

26) 4th Dead + 0.75 Roof Live (unbalanced): Lumber Increase=1.15, Plate Increase=1.15
Uniform Loads (plf)
Vert: 1-2=-20, 2-3=-50, 1-3=-20

WARNING - Verify design parameters and READ NOTES ON THIS AND INCLUDED MITEK REFERENCE PAGE MII-7473 rev. 5/19/2020 BEFORE USE.
Design valid for use only with MiTek® connectors. This design is based only upon parameters shown, and is for an individual building component, not a truss system. Before use, the building designer must verify the applicability of design parameters and properly incorporate this design into the overall building design. Bracing indicated is to prevent buckling of individual truss web and/or chord members only. Additional temporary and permanent bracing is always required for stability and to prevent collapse with possible personal injury and property damage. For general guidance regarding the fabrication, storage, delivery, erection and bracing of trusses and truss systems, see **ANSI/TPI1 Quality Criteria, DSB-89 and BCSI Building Component Safety Information** available from Truss Plate Institute, 2670 Crain Highway, Suite 203 Waldorf, MD 20601

ENGINEERING BY TRENCO A MiTek Affiliate
818 Soundside Road
Edenton, NC 27932

Symbols

PLATE LOCATION AND ORIENTATION

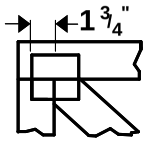

Center plate on joint unless x, y offsets are indicated. Dimensions are in ft-in-sixteenths. Apply plates to both sides of truss and fully embed teeth.

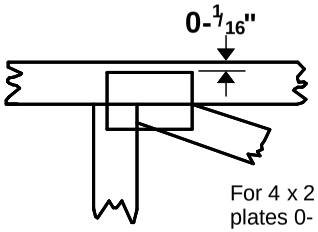

For 4 x 2 orientation, locate plates 0- 1/16" from outside edge of truss.

This symbol indicates the required direction of slots in connector plates.

*** Plate location details available in MiTek 20/20 software or upon request.**

PLATE SIZE

4 x 4

The first dimension is the plate width measured perpendicular to slots. Second dimension is the length parallel to slots.

LATERAL BRACING LOCATION

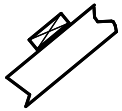

Indicated by symbol shown and/or by text in the bracing section of the output. Use T or I bracing if indicated.

BEARING

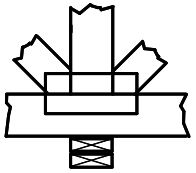

Indicates location where bearings (supports) occur. Icons vary but reaction section indicates joint number where bearings occur. Min size shown is for crushing only.

Industry Standards:

ANSI/TPI1: National Design Specification for Metal Plate Connected Wood Truss Construction.
DSB-89: Design Standard for Bracing.
BCSI: Building Component Safety Information, Guide to Good Practice for Handling, Installing & Bracing of Metal Plate Connected Wood Trusses.

Numbering System

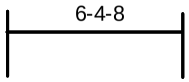

dimensions shown in ft-in-sixteenths
(Drawings not to scale)

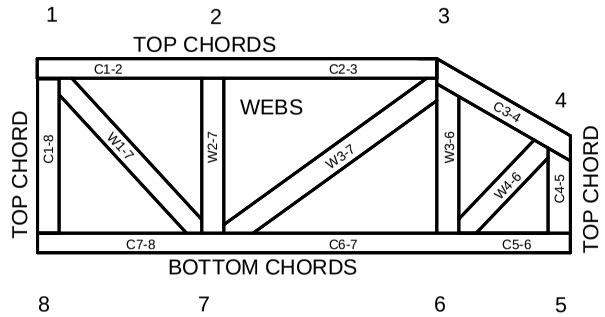

JOINTS ARE GENERALLY NUMBERED/LETTERED CLOCKWISE AROUND THE TRUSS STARTING AT THE JOINT FARTHEST TO THE LEFT.

CHORDS AND WEBS ARE IDENTIFIED BY END JOINT NUMBERS/LETTERS.

PRODUCT CODE APPROVALS

ICC-ES Reports:

ESR-1311, ESR-1352, ESR1988
ER-3907, ESR-2362, ESR-1397, ESR-3282

Trusses are designed for wind loads in the plane of the truss unless otherwise shown.

Lumber design values are in accordance with ANSI/TPI 1 section 6.3 These truss designs rely on lumber values established by others.

© 2012 MiTek® All Rights Reserved

MiTek

ENGINEERING BY TRENCO
A MiTek Affiliate

General Safety Notes

Failure to Follow Could Cause Property Damage or Personal Injury

1. Additional stability bracing for truss system, e.g. diagonal or X-bracing, is always required. See BCSI.
2. Truss bracing must be designed by an engineer. For wide truss spacing, individual lateral braces themselves may require bracing, or alternative Tor I bracing should be considered.
3. Never exceed the design loading shown and never stack materials on inadequately braced trusses.
4. Provide copies of this truss design to the building designer, erection supervisor, property owner and all other interested parties.
5. Cut members to bear tightly against each other.
6. Place plates on each face of truss at each joint and embed fully. Knots and wane at joint locations are regulated by ANSI/TPI 1.
7. Design assumes trusses will be suitably protected from the environment in accord with ANSI/TPI 1.
8. Unless otherwise noted, moisture content of lumber shall not exceed 19% at time of fabrication.
9. Unless expressly noted, this design is not applicable for use with fire retardant, preservative treated, or green lumber.
10. Camber is a non-structural consideration and is the responsibility of truss fabricator. General practice is to camber for dead load deflection.
11. Plate type, size, orientation and location dimensions indicated are minimum plating requirements.
12. Lumber used shall be of the species and size, and in all respects, equal to or better than that specified.
13. Top chords must be sheathed or purlins provided at spacing indicated on design.
14. Bottom chords require lateral bracing at 10 ft. spacing, or less, if no ceiling is installed, unless otherwise noted.
15. Connections not shown are the responsibility of others.
16. Do not cut or alter truss member or plate without prior approval of an engineer.
17. Install and load vertically unless indicated otherwise.
18. Use of green or treated lumber may pose unacceptable environmental, health or performance risks. Consult with project engineer before use.
19. Review all portions of this design (front, back, words and pictures) before use. Reviewing pictures alone is not sufficient.
20. Design assumes manufacture in accordance with ANSI/TPI 1 Quality Criteria.
21. The design does not take into account any dynamic or other loads other than those expressly stated.