ENGINEERING BY TRENCO
A MiTek Affiliate

Trenco
818 Soundside Rd
Edenton, NC 27932

Re: 150_1910_A_Va
KB Home 150.1910.A Vault

The truss drawing(s) referenced below have been prepared by Truss Engineering Co. under my direct supervision based on the parameters provided by 84 Components - #2383.

Pages or sheets covered by this seal: I49904338 thru I49904353

My license renewal date for the state of North Carolina is December 31, 2022.

North Carolina COA: C-0844

January 27,2022

Sevier, Scott

IMPORTANT NOTE: The seal on these truss component designs is a certification that the engineer named is licensed in the jurisdiction(s) identified and that the designs comply with ANSI/TPI 1. These designs are based upon parameters shown (e.g., loads, supports, dimensions, shapes and design codes), which were given to MiTek or TRENCO. Any project specific information included is for MiTek's or TRENCO's customers file reference purpose only, and was not taken into account in the preparation of these designs. MiTek or TRENCO has not independently verified the applicability of the design parameters or the designs for any particular building. Before use, the building designer should verify applicability of design parameters and properly incorporate these designs into the overall building design per ANSI/TPI 1, Chapter 2.

Job	Truss	Truss Type	Qty	Ply	KB Home 150.1910.A Vault
150_1910_A_VA	A1	PIGGYBACK BASE	7	1	I49904338 Job Reference (optional)

84 Components (Dunn), Dunn, NC - 28334, 8.530 s Dec 6 2021 MiTek Industries, Inc. Wed Jan 26 11:28:41 2022 Page 1

ID:VMD62rz1yiHD_OqRtbnrlFztQ8K-?QSppeNXaEcDozDtJvG2aSTYrfJqVRK7bH8Ln3zrVGq

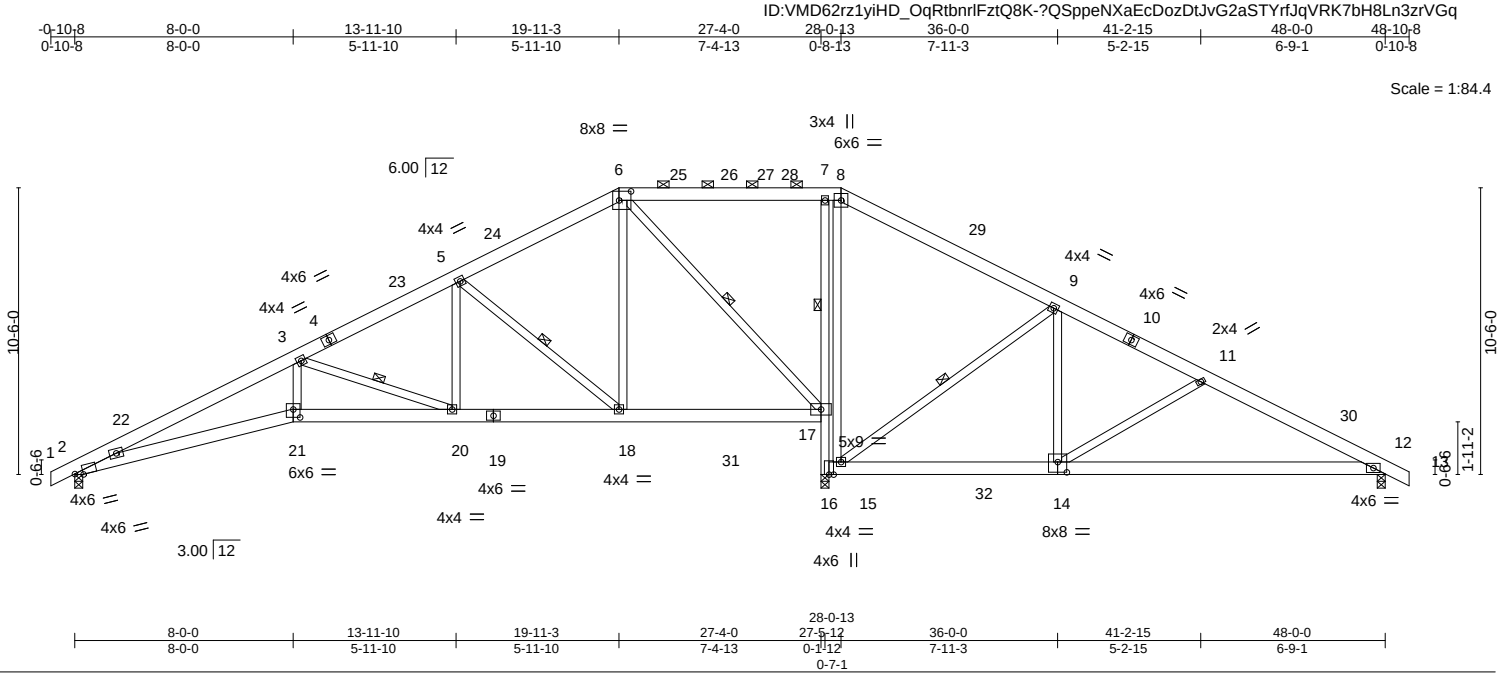

Plate Offsets (X,Y)-- [2:0-3-11,Edge], [6:0-5-4,0-4-0], [14:0-4-0,0-4-8], [21:0-3-0,0-3-8]

LOADING (psf)		**SPACING-** 2-0-0	**CSI.**		**DEFL.**	in	(loc)	l/defl	L/d	**PLATES**	**GRIP**
TCLL (roof)	20.0	Plate Grip DOL 1.15	TC	0.50	Vert(LL)	-0.15	21	>999	240	MT20	197/144
Snow (Pf/Pg)	16.5/15.0	Lumber DOL 1.15	BC	0.82	Vert(CT)	-0.29	2-21	>999	180		
TCDL	10.0	Rep Stress Incr YES	WB	0.75	Horz(CT)	0.03	12	n/a	n/a		
BCLL	0.0 *	Code IRC2018/TPI2014	Matrix-S							Weight: 358 lb	FT = 20%
BCDL	10.0										

LUMBER-

TOP CHORD 2x6 SP No.2

BOT CHORD 2x6 SP No.2 *Except*
7-16: 2x4 SP No.2 or 2x4 SPF No.2

WEBS 2x4 SP No.3

BRACING-

TOP CHORD Structural wood sheathing directly applied or 3-5-13 oc purlins, except
2-0-0 oc purlins (10-0-0 max.): 6-8.

BOT CHORD Rigid ceiling directly applied or 10-0-0 oc bracing, Except:
2-9-14 oc bracing: 16-17
6-0-0 oc bracing: 15-16.
1 Row at midpt 7-17

WEBS 1 Row at midpt 3-20, 5-18, 6-17, 9-15

REACTIONS. (size) 2=0-3-8, 12=0-3-8, 16=(0-3-8 + H10A Simpson Strong-Tie) (req. 0-3-10)
Max Horz 2=141(LC 16)
Max Uplift 2=-98(LC 16), 12=-168(LC 17)
Max Grav 2=1132(LC 58), 12=840(LC 59), 16=2319(LC 3)

FORCES. (lb) - Max. Comp./Max. Ten. - All forces 250 (lb) or less except when shown.

TOP CHORD 2-3=-3249/347, 3-5=-1647/206, 5-6=-749/208, 6-7=-45/377, 7-8=-47/380, 8-9=-44/464, 9-11=-811/304, 11-12=-1110/350

BOT CHORD 2-21=-380/2938, 20-21=-355/2761, 18-20=-124/1420, 17-18=0/626, 16-17=-1901/11, 7-17=-836/70, 14-15=-107/694, 12-14=-231/949

WEBS 3-21=-11/944, 3-20=-1479/247, 5-20=-21/739, 5-18=-1091/178, 6-18=-18/968, 6-17=-1245/39, 9-14=0/679, 11-14=-370/144, 8-15=-36/334, 9-15=-1087/141

NOTES-

1) Unbalanced roof live loads have been considered for this design.
2) Wind: ASCE 7-16; Vult=120mph (3-second gust) Vasd=95mph; TCDL=6.0psf; BCDL=6.0psf; h=25ft; Cat. II; Exp B; Enclosed; MWFRS (envelope) gable end zone and C-C Exterior(2E) -0-10-8 to 2-1-8, Interior(1) 2-1-8 to 19-11-3, Exterior(2R) 19-11-3 to 24-2-2, Interior(1) 24-2-2 to 28-0-13, Exterior(2R) 28-0-13 to 32-3-11, Interior(1) 32-3-11 to 48-10-8 zone;C-C for members and forces & MWFRS for reactions shown; Lumber DOL=1.60 plate grip DOL=1.60
3) TCLL: ASCE 7-16; Pr=20.0 psf (roof LL: Lum DOL=1.15 Plate DOL=1.15); Pg=15.0 psf; Pf=16.5 psf (Lum DOL=1.15 Plate DOL=1.15); Is=1.0; Rough Cat B; Partially Exp.; Ce=1.0; Cs=1.00; Ct=1.10, Lu=50-0-0; Min. flat roof snow load governs. Rain surcharge applied to all exposed surfaces with slopes less than 0.500/12 in accordance with IBC 1608.3.4.
4) Unbalanced snow loads have been considered for this design.
5) This truss has been designed for greater of min roof live load of 12.0 psf or 1.00 times flat roof load of 11.6 psf on overhangs non-concurrent with other live loads.
6) Provide adequate drainage to prevent water ponding.
7) This truss has been designed for a 10.0 psf bottom chord live load nonconcurrent with any other live loads.
8) * This truss has been designed for a live load of 20.0psf on the bottom chord in all areas where a rectangle 3-6-0 tall by 2-0-0 wide will fit between the bottom chord and any other members, with BCDL = 10.0psf.
9) Bearing at joint(s) 2, 16 considers parallel to grain value using ANSI/TPI 1 angle to grain formula. Building designer should verify capacity of bearing surface.
10) H10A Simpson Strong-Tie connectors recommended to connect truss to bearing walls due to UPLIFT at jt(s) 16. This connection is for uplift only and does not consider lateral forces.

Continued on page 2

NORTH CAROLINA PROFESSIONAL SEAL 044925 ENGINEER SCOTT M. SEVIER

January 27,2022

WARNING - Verify design parameters and READ NOTES ON THIS AND INCLUDED MITEK REFERENCE PAGE MII-7473 rev. 5/19/2020 BEFORE USE.
Design valid for use only with MiTek® connectors. This design is based only upon parameters shown, and is for an individual building component, not a truss system. Before use, the building designer must verify the applicability of design parameters and properly incorporate this design into the overall building design. Bracing indicated is to prevent buckling of individual truss web and/or chord members only. Additional temporary and permanent bracing is always required for stability and to prevent collapse with possible personal injury and property damage. For general guidance regarding the fabrication, storage, delivery, erection and bracing of trusses and truss systems, see **ANSI/TPI1 Quality Criteria, DSB-89 and BCSI Building Component Safety Information** available from Truss Plate Institute, 2670 Crain Highway, Suite 203 Waldorf, MD 20601

ENGINEERING BY TRENCO A MiTek Affiliate
818 Soundside Road
Edenton, NC 27932

NOTES-

11) One H2.5A Simpson Strong-Tie connectors recommended to connect truss to bearing walls due to UPLIFT at jt(s) 2 and 12. This connection is for uplift only and does not consider lateral forces.
12) This truss is designed in accordance with the 2018 International Residential Code sections R502.11.1 and R802.10.2 and referenced standard ANSI/TPI 1.
13) Graphical purlin representation does not depict the size or the orientation of the purlin along the top and/or bottom chord.

WARNING - Verify design parameters and READ NOTES ON THIS AND INCLUDED MITEK REFERENCE PAGE MII-7473 rev. 5/19/2020 BEFORE USE.
Design valid for use only with MiTek® connectors. This design is based only upon parameters shown, and is for an individual building component, not a truss system. Before use, the building designer must verify the applicability of design parameters and properly incorporate this design into the overall building design. Bracing indicated is to prevent buckling of individual truss web and/or chord members only. Additional temporary and permanent bracing is always required for stability and to prevent collapse with possible personal injury and property damage. For general guidance regarding the fabrication, storage, delivery, erection and bracing of trusses and truss systems, see **ANSI/TPI1 Quality Criteria, DSB-89 and BCSI Building Component Safety Information** available from Truss Plate Institute, 2670 Crain Highway, Suite 203 Waldorf, MD 20601

ENGINEERING BY TRENCO A MiTek Affiliate
818 Soundside Road
Edenton, NC 27932

Job	Truss	Truss Type	Qty	Ply	KB Home 150.1910.A Vault
150_1910_A_VA	A1A	ROOF TRUSS	3	1	I49904339 Job Reference (optional)

84 Components (Dunn), Dunn, NC - 28334, 8.530 s Dec 6 2021 MiTek Industries, Inc. Wed Jan 26 11:28:43 2022 Page 1

ID:VMD62rz1yiHD_OqRtbnrlFztQ8K-xpaZEJPn6rsx1HNGRKIWftYq1TzrzH?Q3bdSryzrVGo

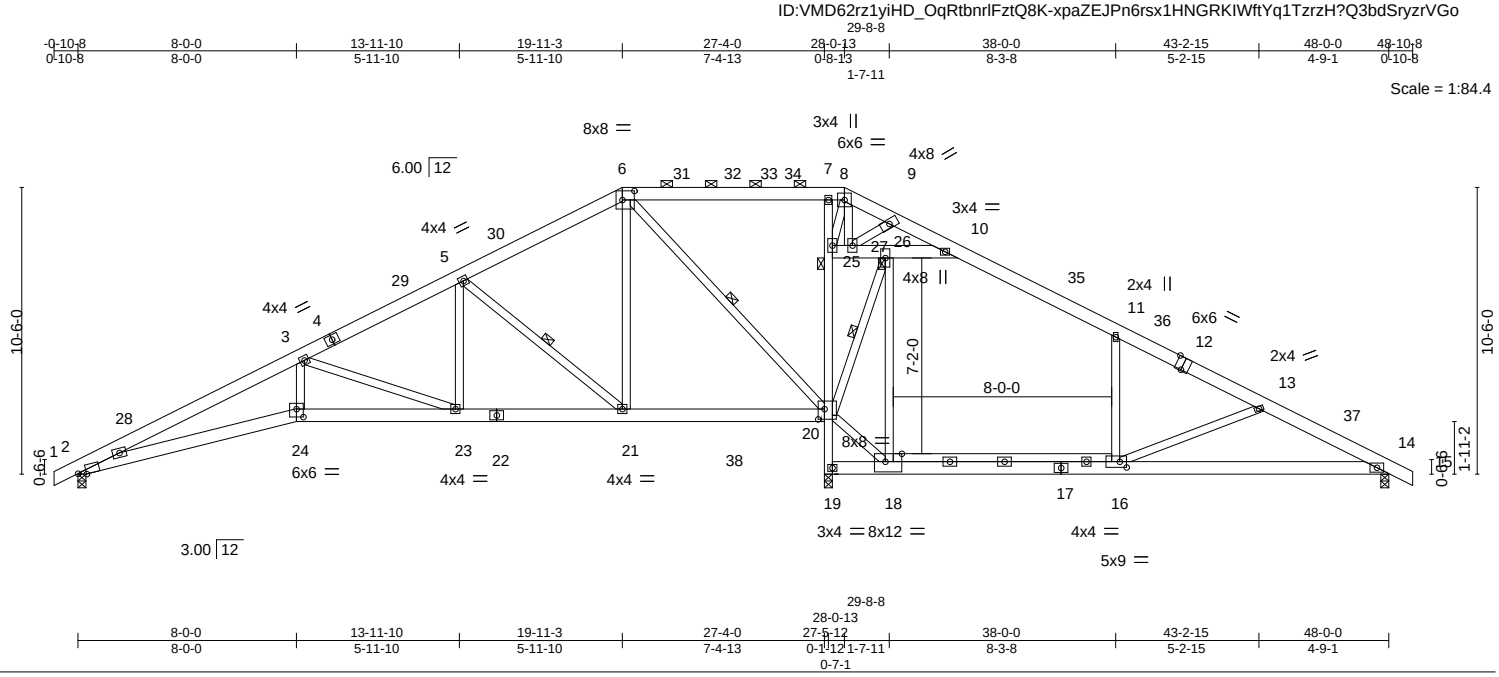

Plate Offsets (X,Y)-- [2:0-3-11,Edge], [6:0-5-4,0-4-0], [12:0-3-0,Edge], [16:0-3-0,0-2-8], [18:0-7-4,Edge], [20:0-2-12,0-4-8], [24:0-3-0,0-3-8]

LOADING (psf)		**SPACING-** 2-0-0	**CSI.**		**DEFL.**	in	(loc)	l/defl	L/d	**PLATES**	**GRIP**
TCLL (roof)	20.0	Plate Grip DOL 1.15	TC	0.71	Vert(LL)	-0.44	14-16	>557	240	MT20	197/144
Snow (Pf/Pg)	16.5/15.0	Lumber DOL 1.15	BC	0.85	Vert(CT)	-0.81	14-16	>303	180		
TCDL	10.0	Rep Stress Incr YES	WB	1.00	Horz(CT)	0.07	14	n/a	n/a		
BCLL	0.0 *	Code IRC2018/TPI2014	Matrix-S							Weight: 381 lb	FT = 20%
BCDL	10.0										

LUMBER-

TOP CHORD 2x6 SP No.2 *Except*
8-12: 2x6 SP DSS

BOT CHORD 2x6 SP No.2 *Except*
7-19,16-18: 2x4 SP No.2 or 2x4 SPF No.2, 17-19: 2x6 SP DSS

WEBS 2x4 SP No.3 *Except*
11-16,18-26: 2x4 SP No.2 or 2x4 SPF No.2, 10-25: 2x6 SP No.2

BRACING-

TOP CHORD Structural wood sheathing directly applied or 4-5-0 oc purlins, except 2-0-0 oc purlins (10-0-0 max.): 6-8.

BOT CHORD Rigid ceiling directly applied or 2-7-2 oc bracing.

WEBS 1 Row at midpt 5-21, 6-20, 20-26

JOINTS 1 Brace at Jt(s): 25, 26

REACTIONS. (size) 2=0-3-8, 14=0-3-8, 19=(0-3-8 + H10A Simpson Strong-Tie) (req. 0-4-12)
Max Horz 2=-141(LC 21)
Max Uplift 2=-54(LC 16), 14=-143(LC 17), 19=-22(LC 16)
Max Grav 2=869(LC 58), 14=597(LC 59), 19=3032(LC 3)

FORCES. (lb) - Max. Comp./Max. Ten. - All forces 250 (lb) or less except when shown.

TOP CHORD 2-3=-2186/171, 3-5=-810/88, 6-7=-5/1228, 7-8=-9/1288, 8-9=-23/1918, 9-10=-11/2148, 10-11=-57/770, 11-13=-170/620, 13-14=-790/315

BOT CHORD 2-24=-219/1975, 23-24=-202/1834, 21-23=-6/714, 19-20=-3600/53, 20-25=-583/167, 7-25=-885/198, 16-18=-592/166, 14-16=-224/703

WEBS 3-24=0/717, 3-23=-1251/209, 5-23=-5/646, 5-21=-985/161, 6-21=-13/928, 6-20=-1650/103, 11-16=0/451, 13-16=-832/190, 25-27=-401/125, 26-27=-981/168, 10-26=-1768/268, 18-20=-676/231, 18-26=-41/1251, 20-26=-2466/285, 9-27=-22/579, 8-27=-1769/361, 8-25=-371/1166

NOTES-

1) Unbalanced roof live loads have been considered for this design.
2) Wind: ASCE 7-16; Vult=120mph (3-second gust) Vasd=95mph; TCDL=6.0psf; BCDL=6.0psf; h=25ft; Cat. II; Exp B; Enclosed; MWFRS (envelope) gable end zone and C-C Exterior(2E) -0-10-8 to 2-1-8, Interior(1) 2-1-8 to 19-11-3, Exterior(2R) 19-11-3 to 24-2-2, Interior(1) 24-2-2 to 28-0-13, Exterior(2R) 28-0-13 to 32-3-2, Interior(1) 32-3-2 to 48-10-8 zone;C-C for members and forces & MWFRS for reactions shown; Lumber DOL=1.60 plate grip DOL=1.60
3) TCLL: ASCE 7-16; Pr=20.0 psf (roof LL: Lum DOL=1.15 Plate DOL=1.15); Pg=15.0 psf; Pf=16.5 psf (Lum DOL=1.15 Plate DOL=1.15); Is=1.0; Rough Cat B; Partially Exp.; Ce=1.0; Cs=1.00; Ct=1.10, Lu=50-0-0; Min. flat roof snow load governs. Rain surcharge applied to all exposed surfaces with slopes less than 0.500/12 in accordance with IBC 1608.3.4.
4) Unbalanced snow loads have been considered for this design.
5) This truss has been designed for greater of min roof live load of 12.0 psf or 1.00 times flat roof load of 11.6 psf on overhangs non-concurrent with other live loads.
6) Provide adequate drainage to prevent water ponding.
7) All plates are 4x6 MT20 unless otherwise indicated.
8) This truss has been designed for a 10.0 psf bottom chord live load nonconcurrent with any other live loads.
9) * This truss has been designed for a live load of 20.0psf on the bottom chord in all areas where a rectangle 3-6-0 tall by 2-0-0 wide will fit between the bottom chord and any other members, with BCDL = 10.0psf.
10) Bearing at joint(s) 2, 19 considers parallel to grain value using ANSI/TPI 1 angle to grain formula. Building designer should verify capacity of bearing surface.

Continued on page 2

January 27,2022

WARNING - Verify design parameters and READ NOTES ON THIS AND INCLUDED MITEK REFERENCE PAGE MII-7473 rev. 5/19/2020 BEFORE USE.
Design valid for use only with MiTek® connectors. This design is based only upon parameters shown, and is for an individual building component, not a truss system. Before use, the building designer must verify the applicability of design parameters and properly incorporate this design into the overall building design. Bracing indicated is to prevent buckling of individual truss web and/or chord members only. Additional temporary and permanent bracing is always required for stability and to prevent collapse with possible personal injury and property damage. For general guidance regarding the fabrication, storage, delivery, erection and bracing of trusses and truss systems, see **ANSI/TPI1 Quality Criteria, DSB-89 and BCSI Building Component Safety Information** available from Truss Plate Institute, 2670 Crain Highway, Suite 203 Waldorf, MD 20601

ENGINEERING BY TRENCO A MiTek Affiliate
818 Soundside Road
Edenton, NC 27932

NOTES-

11) H10A Simpson Strong-Tie connectors recommended to connect truss to bearing walls due to UPLIFT at jt(s) 19. This connection is for uplift only and does not consider lateral forces.
12) One H2.5A Simpson Strong-Tie connectors recommended to connect truss to bearing walls due to UPLIFT at jt(s) 2 and 14. This connection is for uplift only and does not consider lateral forces.
13) This truss is designed in accordance with the 2018 International Residential Code sections R502.11.1 and R802.10.2 and referenced standard ANSI/TPI 1.
14) Graphical purlin representation does not depict the size or the orientation of the purlin along the top and/or bottom chord.

WARNING - Verify design parameters and READ NOTES ON THIS AND INCLUDED MITEK REFERENCE PAGE MII-7473 rev. 5/19/2020 BEFORE USE.
Design valid for use only with MiTek® connectors. This design is based only upon parameters shown, and is for an individual building component, not a truss system. Before use, the building designer must verify the applicability of design parameters and properly incorporate this design into the overall building design. Bracing indicated is to prevent buckling of individual truss web and/or chord members only. Additional temporary and permanent bracing is always required for stability and to prevent collapse with possible personal injury and property damage. For general guidance regarding the fabrication, storage, delivery, erection and bracing of trusses and truss systems, see **ANSI/TPI1 Quality Criteria, DSB-89 and BCSI Building Component Safety Information** available from Truss Plate Institute, 2670 Crain Highway, Suite 203 Waldorf, MD 20601

ENGINEERING BY TRENCO A MiTek Affiliate
818 Soundside Road
Edenton, NC 27932

Job	Truss	Truss Type	Qty	Ply	KB Home 150.1910.A Vault
150_1910_A_VA	A1E	PIGGYBACK BASE SUPPO	1	1	I49904340 Job Reference (optional)

84 Components (Dunn), Dunn, NC - 28334, 8.530 s Dec 6 2021 MiTek Industries, Inc. Wed Jan 26 11:28:46 2022 Page 1

ID:VMD62rz1yiHD_OqRtbnrlFztQ8K-MOFisLRgPmFWuk5r6SsDHWAV7gBv9qAsIZr6SHzrVGl

-0-10-8 19-11-3 27-4-0 28-0-13 48-0-0 48-10-8

0-10-8 19-11-3 7-4-13 0-8-13 19-11-3 0-10-8

Scale = 1:85.1

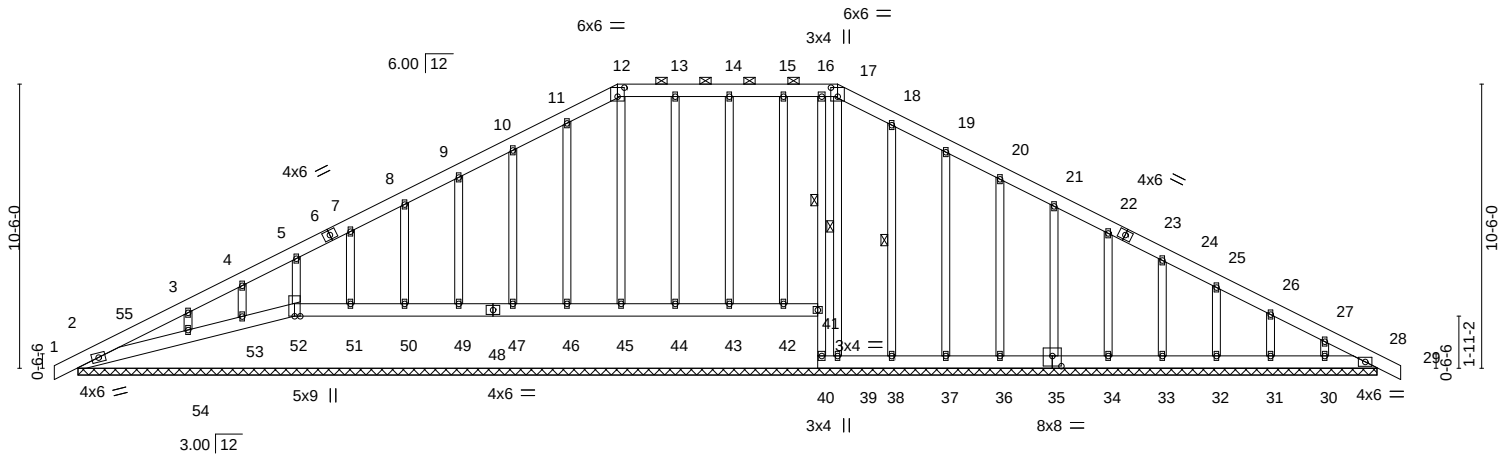

8-0-0 27-4-0 48-0-0

8-0-0 19-4-0 20-8-0

Plate Offsets (X,Y)-- [12:0-3-0,0-4-0], [17:0-3-0,0-4-0], [35:0-4-0,0-4-8]

LOADING (psf)		**SPACING-** 2-0-0	**CSI.**		**DEFL.**	in	(loc)	l/defl	L/d	**PLATES**	**GRIP**
TCLL (roof)	20.0	Plate Grip DOL 1.15	TC	0.08	Vert(LL)	0.00	28	n/r	120	MT20	244/190
Snow (Pf/Pg)	16.5/15.0	Lumber DOL 1.15	BC	0.12	Vert(CT)	0.00	28	n/r	120		
TCDL	10.0	Rep Stress Incr YES	WB	0.20	Horz(CT)	0.01	28	n/a	n/a		
BCLL	0.0 *	Code IRC2018/TPI2014	Matrix-S							Weight: 418 lb	FT = 20%
BCDL	10.0										

LUMBER-

TOP CHORD 2x6 SP No.2

BOT CHORD 2x6 SP No.2 *Except*
16-40: 2x4 SP No.3

OTHERS 2x4 SP No.3

BRACING-

TOP CHORD Structural wood sheathing directly applied or 6-0-0 oc purlins, except 2-0-0 oc purlins (6-0-0 max.): 12-17.

BOT CHORD Rigid ceiling directly applied or 10-0-0 oc bracing, Except:
6-0-0 oc bracing: 53-54.
1 Row at midpt 16-41

WEBS 1 Row at midpt 17-39, 18-38

REACTIONS. All bearings 48-0-0.

(lb) - Max Horz 2=-141(LC 21)

Max Uplift All uplift 100 lb or less at joint(s) 2, 52, 40, 42, 43, 44, 46, 47, 49, 50, 51, 53, 54, 38, 37, 36, 35, 34, 33, 32, 31, 30, 28

Max Grav All reactions 250 lb or less at joint(s) 2, 52, 40, 39, 42, 43, 44, 45, 46, 47, 49, 50, 51, 53, 38, 37, 36, 35, 34, 33, 32, 31, 30, 41, 28 except 54=318(LC 56)

FORCES. (lb) - Max. Comp./Max. Ten. - All forces 250 (lb) or less except when shown.

TOP CHORD 8-9=-114/255, 9-10=-133/293, 10-11=-152/334, 11-12=-167/364, 12-13=-154/344, 13-14=-154/344, 14-15=-154/344, 15-16=-154/344, 16-17=-155/346, 17-18=-166/365, 18-19=-152/334, 19-20=-132/293, 20-21=-114/255

NOTES-

1) Unbalanced roof live loads have been considered for this design.
2) Wind: ASCE 7-16; Vult=120mph (3-second gust) Vasd=95mph; TCDL=6.0psf; BCDL=6.0psf; h=25ft; Cat. II; Exp B; Enclosed; MWFRS (envelope) gable end zone and C-C Corner(3E) -0-10-8 to 2-1-8, Exterior(2N) 2-1-8 to 19-11-3, Corner(3R) 19-11-3 to 22-11-3, Exterior(2N) 22-11-3 to 28-0-13, Corner(3R) 28-0-13 to 31-0-13, Exterior(2N) 31-0-13 to 48-10-8 zone;C-C for members and forces & MWFRS for reactions shown; Lumber DOL=1.60 plate grip DOL=1.60
3) Truss designed for wind loads in the plane of the truss only. For studs exposed to wind (normal to the face), see Standard Industry Gable End Details as applicable, or consult qualified building designer as per ANSI/TPI 1.
4) TCLL: ASCE 7-16; Pr=20.0 psf (roof LL: Lum DOL=1.15 Plate DOL=1.15); Pg=15.0 psf; Pf=16.5 psf (Lum DOL=1.15 Plate DOL=1.15); Is=1.0; Rough Cat B; Partially Exp.; Ce=1.0; Cs=1.00; Ct=1.10, Lu=50-0-0; Min. flat roof snow load governs. Rain surcharge applied to all exposed surfaces with slopes less than 0.500/12 in accordance with IBC 1608.3.4.
5) Unbalanced snow loads have been considered for this design.
6) This truss has been designed for greater of min roof live load of 12.0 psf or 1.00 times flat roof load of 11.6 psf on overhangs non-concurrent with other live loads.
7) Provide adequate drainage to prevent water ponding.
8) All plates are 2x4 MT20 unless otherwise indicated.
9) Gable requires continuous bottom chord bearing.
10) Gable studs spaced at 2-0-0 oc.
11) This truss has been designed for a 10.0 psf bottom chord live load nonconcurrent with any other live loads.
12) * This truss has been designed for a live load of 20.0psf on the bottom chord in all areas where a rectangle 3-6-0 tall by 2-0-0 wide will fit between the bottom chord and any other members.
13) Bearing at joint(s) 41 considers parallel to grain value using ANSI/TPI 1 angle to grain formula. Building designer should verify capacity of bearing surface.

Continued on page 2

NORTH CAROLINA PROFESSIONAL SEAL 044925 ENGINEER SCOTT M. SEVIER

January 27,2022

WARNING - Verify design parameters and READ NOTES ON THIS AND INCLUDED MITEK REFERENCE PAGE MII-7473 rev. 5/19/2020 BEFORE USE.
Design valid for use only with MiTek® connectors. This design is based only upon parameters shown, and is for an individual building component, not a truss system. Before use, the building designer must verify the applicability of design parameters and properly incorporate this design into the overall building design. Bracing indicated is to prevent buckling of individual truss web and/or chord members only. Additional temporary and permanent bracing is always required for stability and to prevent collapse with possible personal injury and property damage. For general guidance regarding the fabrication, storage, delivery, erection and bracing of trusses and truss systems, see **ANSI/TPI1 Quality Criteria, DSB-89 and BCSI Building Component Safety Information** available from Truss Plate Institute, 2670 Crain Highway, Suite 203 Waldorf, MD 20601

ENGINEERING BY TRENCO A MiTek Affiliate
818 Soundside Road
Edenton, NC 27932

NOTES-

14) Provide mechanical connection (by others) of truss to bearing plate capable of withstanding 100 lb uplift at joint(s) 52, 40, 53, 54.
15) n/a

16) Beveled plate or shim required to provide full bearing surface with truss chord at joint(s) 52, 42, 43, 44, 45, 46, 47, 49, 50, 51, 53, 54.
17) This truss is designed in accordance with the 2018 International Residential Code sections R502.11.1 and R802.10.2 and referenced standard ANSI/TPI 1.
18) Graphical purlin representation does not depict the size or the orientation of the purlin along the top and/or bottom chord.

WARNING - Verify design parameters and READ NOTES ON THIS AND INCLUDED MITEK REFERENCE PAGE MII-7473 rev. 5/19/2020 BEFORE USE.
Design valid for use only with MiTek® connectors. This design is based only upon parameters shown, and is for an individual building component, not a truss system. Before use, the building designer must verify the applicability of design parameters and properly incorporate this design into the overall building design. Bracing indicated is to prevent buckling of individual truss web and/or chord members only. Additional temporary and permanent bracing is always required for stability and to prevent collapse with possible personal injury and property damage. For general guidance regarding the fabrication, storage, delivery, erection and bracing of trusses and truss systems, see **ANSI/TPI1 Quality Criteria, DSB-89 and BCSI Building Component Safety Information** available from Truss Plate Institute, 2670 Crain Highway, Suite 203 Waldorf, MD 20601

ENGINEERING BY TRENCO A MiTek Affiliate
818 Soundside Road
Edenton, NC 27932

Job	Truss	Truss Type	Qty	Ply	KB Home 150.1910.A Vault
150_1910_A_VA	A2A	ROOF TRUSS	3	1	I49904341 Job Reference (optional)

84 Components (Dunn), Dunn, NC - 28334, 8.530 s Dec 6 2021 MiTek Industries, Inc. Wed Jan 26 11:28:49 2022 Page 1

ID:VMD62rz1yiHD_OqRtbnrlFztQ8K-mzxqVNUYihd4lCqQnbPwv8oqdt3wM?BJRX4m3czrVGi

-0-10-8	8-0-0	13-11-10	19-11-3	25-3-0	28-0-13	29-9-0	34-7-14	38-0-8	41-2-15	42-4-2	48-0-0	48-10-8
0-10-8	8-0-0	5-11-10	5-11-10	5-3-13	2-9-13	1-8-3	4-10-14	3-4-10	3-2-7	1-1-3	5-7-14	0-10-8

Scale = 1:84.4

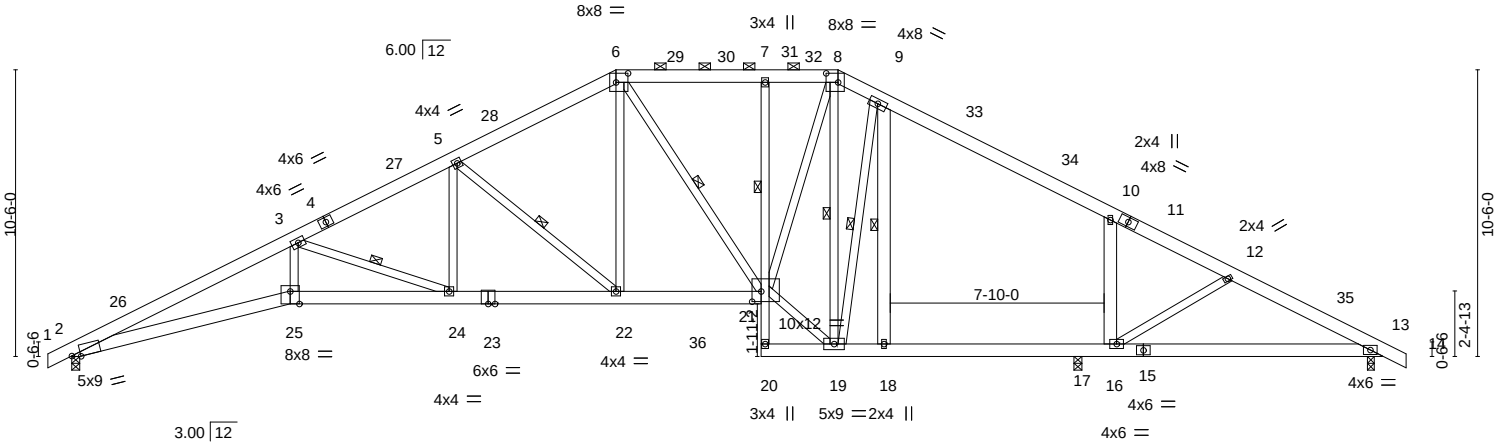

8-0-0	13-11-10	19-11-3	25-3-0	28-0-13	29-9-0	36-10-4	38-0-8	42-4-2	47-8-8	48-0-0
8-0-0	5-11-10	5-11-10	5-3-13	2-9-13	1-8-3	7-1-4	1-2-4	4-3-10	5-4-6	0-3-8

Plate Offsets (X,Y)-- [2:0-3-15,Edge], [6:0-5-4,0-4-0], [8:0-5-4,0-4-0], [21:0-4-0,0-4-8], [25:0-4-0,Edge]

LOADING (psf)		**SPACING-** 2-0-0	**CSI.**		**DEFL.**	in	(loc)	l/defl	L/d	**PLATES**	**GRIP**
TCLL (roof)	20.0	Plate Grip DOL 1.15	TC	0.77	Vert(LL)	-0.36	24-25	>999	240	MT20	244/190
Snow (Pf/Pg)	16.5/15.0	Lumber DOL 1.15	BC	0.68	Vert(CT)	-0.66	24-25	>669	180		
TCDL	10.0	Rep Stress Incr YES	WB	0.95	Horz(CT)	0.36	13	n/a	n/a		
BCLL	0.0 *	Code IRC2018/TPI2014	Matrix-S		Attic	-0.25	17-18	681	360	Weight: 393 lb	FT = 20%
BCDL	10.0										

LUMBER-

TOP CHORD 2x6 SP No.2

BOT CHORD 2x6 SP DSS *Except*
7-20: 2x4 SP No.3, 21-23,13-15: 2x6 SP No.2

WEBS 2x4 SP No.3 *Except*
9-18,10-16: 2x6 SP No.2

BRACING-

TOP CHORD Structural wood sheathing directly applied or 2-2-0 oc purlins, except 2-0-0 oc purlins (4-6-7 max.): 6-8.

BOT CHORD Rigid ceiling directly applied or 10-0-0 oc bracing, Except: 6-0-0 oc bracing: 20-21.
1 Row at midpt 7-21

WEBS 1 Row at midpt 3-24, 5-22, 6-21, 8-19, 9-18, 9-19

REACTIONS. (size) 2=0-3-8, 17=0-3-8, 13=0-3-0
Max Horz 2=-141(LC 21)
Max Uplift 2=-59(LC 16), 17=-90(LC 17)
Max Grav 2=1919(LC 3), 17=1400(LC 3), 13=1352(LC 3)

FORCES. (lb) - Max. Comp./Max. Ten. - All forces 250 (lb) or less except when shown.

TOP CHORD 2-3=-6456/191, 3-5=-3965/88, 5-6=-2885/85, 6-7=-2449/92, 7-8=-2443/92, 8-9=-2163/136, 9-10=-2244/83, 10-12=-2101/0, 12-13=-2258/0

BOT CHORD 2-25=-237/5846, 24-25=-219/5539, 22-24=-18/3508, 21-22=0/2535, 7-21=-336/102, 18-19=0/1886, 17-18=0/1884, 16-17=0/1884, 13-16=0/1962

WEBS 3-25=0/1624, 3-24=-2170/214, 5-24=-1/998, 5-22=-1344/158, 6-22=-26/1124, 6-21=-281/95, 19-21=0/2297, 8-21=0/1806, 8-19=-930/14, 9-18=-584/68, 10-16=-650/142, 9-19=-155/283

NOTES-

1) Unbalanced roof live loads have been considered for this design.
2) Wind: ASCE 7-16; Vult=120mph (3-second gust) Vasd=95mph; TCDL=6.0psf; BCDL=6.0psf; h=25ft; Cat. II; Exp B; Enclosed; MWFRS (envelope) gable end zone and C-C Exterior(2E) -0-10-8 to 2-1-8, Interior(1) 2-1-8 to 19-11-3, Exterior(2R) 19-11-3 to 24-2-2, Interior(1) 24-2-2 to 28-0-13, Exterior(2R) 28-0-13 to 32-3-11, Interior(1) 32-3-11 to 48-10-8 zone;C-C for members and forces & MWFRS for reactions shown; Lumber DOL=1.60 plate grip DOL=1.60
3) TCLL: ASCE 7-16; Pr=20.0 psf (roof LL: Lum DOL=1.15 Plate DOL=1.15); Pg=15.0 psf; Pf=16.5 psf (Lum DOL=1.15 Plate DOL=1.15); Is=1.0; Rough Cat B; Partially Exp.; Ce=1.0; Cs=1.00; Ct=1.10, Lu=50-0-0; Min. flat roof snow load governs. Rain surcharge applied to all exposed surfaces with slopes less than 0.500/12 in accordance with IBC 1608.3.4.
4) Unbalanced snow loads have been considered for this design.
5) This truss has been designed for greater of min roof live load of 12.0 psf or 1.00 times flat roof load of 11.6 psf on overhangs non-concurrent with other live loads.
6) Provide adequate drainage to prevent water ponding.
7) This truss has been designed for a 10.0 psf bottom chord live load nonconcurrent with any other live loads.
8) * This truss has been designed for a live load of 20.0psf on the bottom chord in all areas where a rectangle 3-6-0 tall by 2-0-0 wide will fit between the bottom chord and any other members, with BCDL = 10.0psf.
9) Ceiling dead load (5.0 psf) on member(s). 8-9, 9-10
10) Bottom chord live load (40.0 psf) and additional bottom chord dead load (0.0 psf) applied only to room. 17-18, 16-17
11) Bearing at joint(s) 2 considers parallel to grain value using ANSI/TPI 1 angle to grain formula. Building designer should verify capacity of bearing surface.

January 27,2022

Continued on page 2

WARNING - Verify design parameters and READ NOTES ON THIS AND INCLUDED MITEK REFERENCE PAGE MII-7473 rev. 5/19/2020 BEFORE USE.
Design valid for use only with MiTek® connectors. This design is based only upon parameters shown, and is for an individual building component, not a truss system. Before use, the building designer must verify the applicability of design parameters and properly incorporate this design into the overall building design. Bracing indicated is to prevent buckling of individual truss web and/or chord members only. Additional temporary and permanent bracing is always required for stability and to prevent collapse with possible personal injury and property damage. For general guidance regarding the fabrication, storage, delivery, erection and bracing of trusses and truss systems, see **ANSI/TPI1 Quality Criteria, DSB-89 and BCSI Building Component Safety Information** available from Truss Plate Institute, 2670 Crain Highway, Suite 203 Waldorf, MD 20601

ENGINEERING BY TRENCO A MiTek Affiliate
818 Soundside Road
Edenton, NC 27932

NOTES-

12) One H2.5A Simpson Strong-Tie connectors recommended to connect truss to bearing walls due to UPLIFT at jt(s) 2 and 17. This connection is for uplift only and does not consider lateral forces.
13) This truss is designed in accordance with the 2018 International Residential Code sections R502.11.1 and R802.10.2 and referenced standard ANSI/TPI 1.
14) Graphical purlin representation does not depict the size or the orientation of the purlin along the top and/or bottom chord.
15) ATTIC SPACE SHOWN IS DESIGNED AS UNINHABITABLE.

WARNING - Verify design parameters and READ NOTES ON THIS AND INCLUDED MITEK REFERENCE PAGE MII-7473 rev. 5/19/2020 BEFORE USE.
Design valid for use only with MiTek® connectors. This design is based only upon parameters shown, and is for an individual building component, not a truss system. Before use, the building designer must verify the applicability of design parameters and properly incorporate this design into the overall building design. Bracing indicated is to prevent buckling of individual truss web and/or chord members only. Additional temporary and permanent bracing is always required for stability and to prevent collapse with possible personal injury and property damage. For general guidance regarding the fabrication, storage, delivery, erection and bracing of trusses and truss systems, see **ANSI/TPI1 Quality Criteria, DSB-89 and BCSI Building Component Safety Information** available from Truss Plate Institute, 2670 Crain Highway, Suite 203 Waldorf, MD 20601

ENGINEERING BY TRENCO A MiTek Affiliate
818 Soundside Road
Edenton, NC 27932

Job	Truss	Truss Type	Qty	Ply	KB Home 150.1910.A Vault
150_1910_A_VA	A3	ROOF TRUSS	5	1	I49904342 Job Reference (optional)

84 Components (Dunn), Dunn, NC - 28334, 8.530 s Dec 6 2021 MiTek Industries, Inc. Wed Jan 26 11:28:51 2022 Page 1
ID:VMD62rz1yiHD_OqRtbnrlFztQ8K-iM3bv2VpEIto_V_ov0RO_ZtEFhibquAcvrZt7UzrVGg

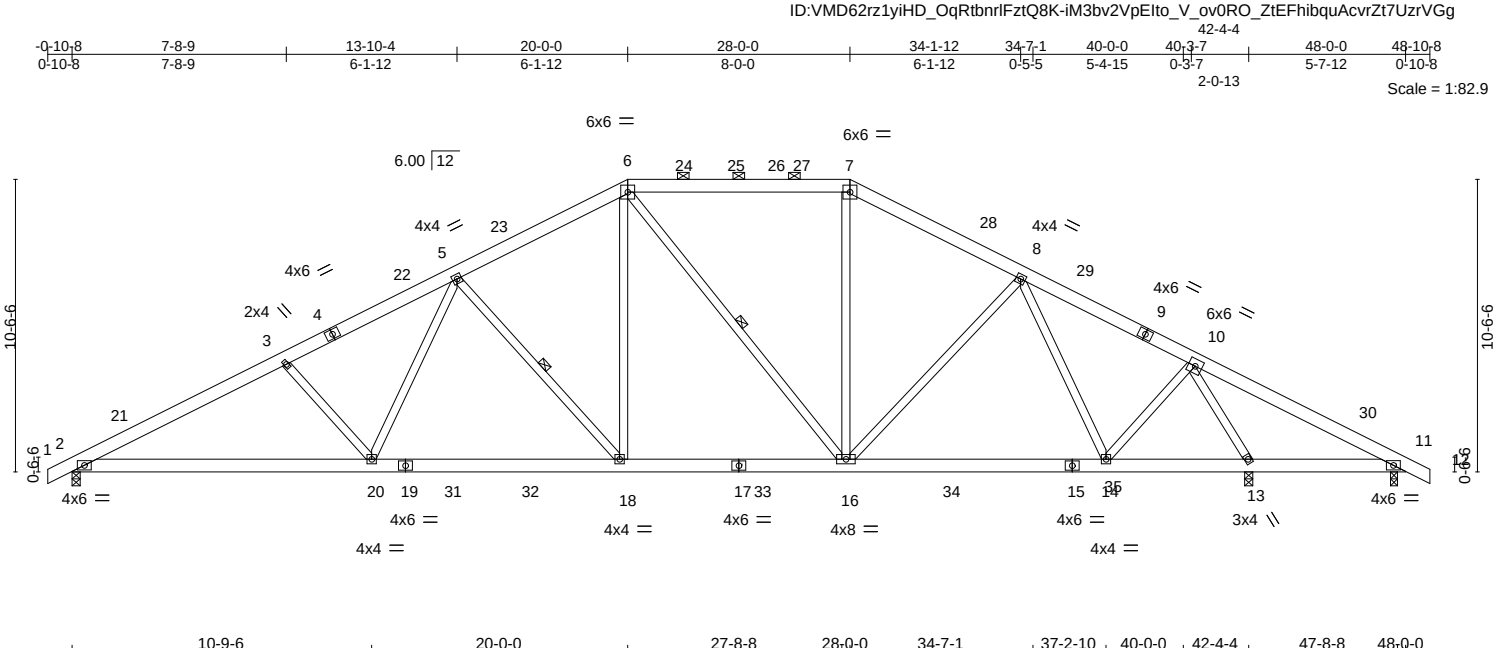

-0-10-8	7-8-9	13-10-4	20-0-0	28-0-0	34-1-12	34-7-1	40-0-0	42-4-4	48-0-0	48-10-8													
0-10-8	7-8-9	6-1-12	6-1-12	8-0-0	6-1-12	0-5-5	5-4-15	0-3-7	5-7-12	0-10-8													
								40-3-7															
								2-0-13															

10-9-6	20-0-0	27-8-8	28-0-0	34-7-1	37-2-10	40-0-0	42-4-4	47-8-8	48-0-0														
10-9-6	9-2-10	7-8-8	0-3-8	6-7-1	2-7-9	2-9-6	2-4-4	5-4-4	0-3-8														

LOADING (psf)		**SPACING-**	2-0-0	**CSI.**		**DEFL.**	in	(loc)	l/defl	L/d	**PLATES**	**GRIP**
TCLL (roof)	20.0	Plate Grip DOL	1.15	TC	0.57	Vert(LL)	-0.16	18-20	>999	240	MT20	197/144
Snow (Pf/Pg)	16.5/15.0	Lumber DOL	1.15	BC	0.86	Vert(CT)	-0.30	2-20	>999	180		
TCDL	10.0	Rep Stress Incr	YES	WB	0.98	Horz(CT)	0.09	13	n/a	n/a		
BCLL	0.0 *	Code IRC2018/TPI2014		Matrix-S							Weight: 355 lb	FT = 20%
BCDL	10.0											

LUMBER-
TOP CHORD 2x6 SP No.2
BOT CHORD 2x6 SP No.2
WEBS 2x4 SP No.3 *Except*
6-16: 2x4 SP No.2 or 2x4 SPF No.2

BRACING-
TOP CHORD Structural wood sheathing directly applied or 3-6-8 oc purlins, except 2-0-0 oc purlins (5-0-5 max.): 6-7.
BOT CHORD Rigid ceiling directly applied or 10-0-0 oc bracing, Except: 6-0-0 oc bracing: 11-13.
WEBS 1 Row at midpt 5-18, 6-16

REACTIONS. (size) 2=0-3-8, 13=(0-3-8 + H10A Simpson Strong-Tie) (req. 0-4-2), 11=0-3-0
Max Horz 2=-141(LC 21)
Max Uplift 2=-72(LC 16), 13=-12(LC 17), 11=-248(LC 58)
Max Grav 2=1877(LC 3), 13=2640(LC 3), 11=18(LC 16)

FORCES. (lb) - Max. Comp./Max. Ten. - All forces 250 (lb) or less except when shown.
TOP CHORD 2-3=-3355/126, 3-5=-3130/120, 5-6=-2251/163, 6-7=-1709/166, 7-8=-1971/158, 8-10=-1478/108, 10-11=-35/1039
BOT CHORD 2-20=-166/2934, 18-20=-49/2441, 16-18=0/1938, 14-16=0/1552, 13-14=0/455, 11-13=-840/75
WEBS 3-20=-383/176, 5-20=-8/724, 6-18=-32/967, 5-18=-815/167, 7-16=0/559, 8-16=-17/360, 8-14=-762/52, 10-14=0/1287, 6-16=-464/87, 10-13=-2724/96

NOTES-
1) Unbalanced roof live loads have been considered for this design.
2) Wind: ASCE 7-16; Vult=120mph (3-second gust) Vasd=95mph; TCDL=6.0psf; BCDL=6.0psf; h=25ft; Cat. II; Exp B; Enclosed; MWFRS (envelope) gable end zone and C-C Exterior(2E) -0-10-8 to 2-1-8, Interior(1) 2-1-8 to 20-0-0, Exterior(2R) 20-0-0 to 24-2-15, Interior(1) 24-2-15 to 28-0-0, Exterior(2R) 28-0-0 to 32-2-15, Interior(1) 32-2-15 to 48-10-8 zone;C-C for members and forces & MWFRS for reactions shown; Lumber DOL=1.60 plate grip DOL=1.60
3) TCLL: ASCE 7-16; Pr=20.0 psf (roof LL: Lum DOL=1.15 Plate DOL=1.15); Pg=15.0 psf; Pf=16.5 psf (Lum DOL=1.15 Plate DOL=1.15); Is=1.0; Rough Cat B; Partially Exp.; Ce=1.0; Cs=1.00; Ct=1.10, Lu=50-0-0; Min. flat roof snow load governs. Rain surcharge applied to all exposed surfaces with slopes less than 0.500/12 in accordance with IBC 1608.3.4.
4) Unbalanced snow loads have been considered for this design.
5) This truss has been designed for greater of min roof live load of 12.0 psf or 1.00 times flat roof load of 11.6 psf on overhangs non-concurrent with other live loads.
6) Provide adequate drainage to prevent water ponding.
7) This truss has been designed for a 10.0 psf bottom chord live load nonconcurrent with any other live loads.
8) * This truss has been designed for a live load of 20.0psf on the bottom chord in all areas where a rectangle 3-6-0 tall by 2-0-0 wide will fit between the bottom chord and any other members, with BCDL = 10.0psf.
9) H10A Simpson Strong-Tie connectors recommended to connect truss to bearing walls due to UPLIFT at jt(s) 13. This connection is for uplift only and does not consider lateral forces.
10) One H2.5A Simpson Strong-Tie connectors recommended to connect truss to bearing walls due to UPLIFT at jt(s) 2 and 11. This connection is for uplift only and does not consider lateral forces.
11) This truss is designed in accordance with the 2018 International Residential Code sections R502.11.1 and R802.10.2 and referenced standard ANSI/TPI 1.
12) Graphical purlin representation does not depict the size or the orientation of the purlin along the top and/or bottom chord.

January 27,2022

WARNING - Verify design parameters and READ NOTES ON THIS AND INCLUDED MITEK REFERENCE PAGE MII-7473 rev. 5/19/2020 BEFORE USE.
Design valid for use only with MiTek® connectors. This design is based only upon parameters shown, and is for an individual building component, not a truss system. Before use, the building designer must verify the applicability of design parameters and properly incorporate this design into the overall building design. Bracing indicated is to prevent buckling of individual truss web and/or chord members only. Additional temporary and permanent bracing is always required for stability and to prevent collapse with possible personal injury and property damage. For general guidance regarding the fabrication, storage, delivery, erection and bracing of trusses and truss systems, see **ANSI/TPI1 Quality Criteria, DSB-89 and BCSI Building Component Safety Information** available from Truss Plate Institute, 2670 Crain Highway, Suite 203 Waldorf, MD 20601

ENGINEERING BY TRENCO A MiTek Affiliate
818 Soundside Road
Edenton, NC 27932

Job	Truss	Truss Type	Qty	Ply	KB Home 150.1910.A Vault
150_1910_A_VA	A4	PIGGYBACK BASE	7	1	I49904343 Job Reference (optional)

84 Components (Dunn), Dunn, NC - 28334, 8.530 s Dec 6 2021 MiTek Industries, Inc. Wed Jan 26 11:28:53 2022 Page 1
ID:VMD62rz1yiHD_OqRtbnrIFztQ8K-fkALKkX3lw7WEp8B0RUs3_zZEVMGIxnuM92_CNzrVGe

-0-10-8	7-8-9	13-10-4	20-0-0	28-0-0	34-1-12	40-3-7	48-0-0
0-10-8	7-8-9	6-1-12	6-1-12	8-0-0	6-1-12	6-1-12	7-8-9

Scale = 1:83.0

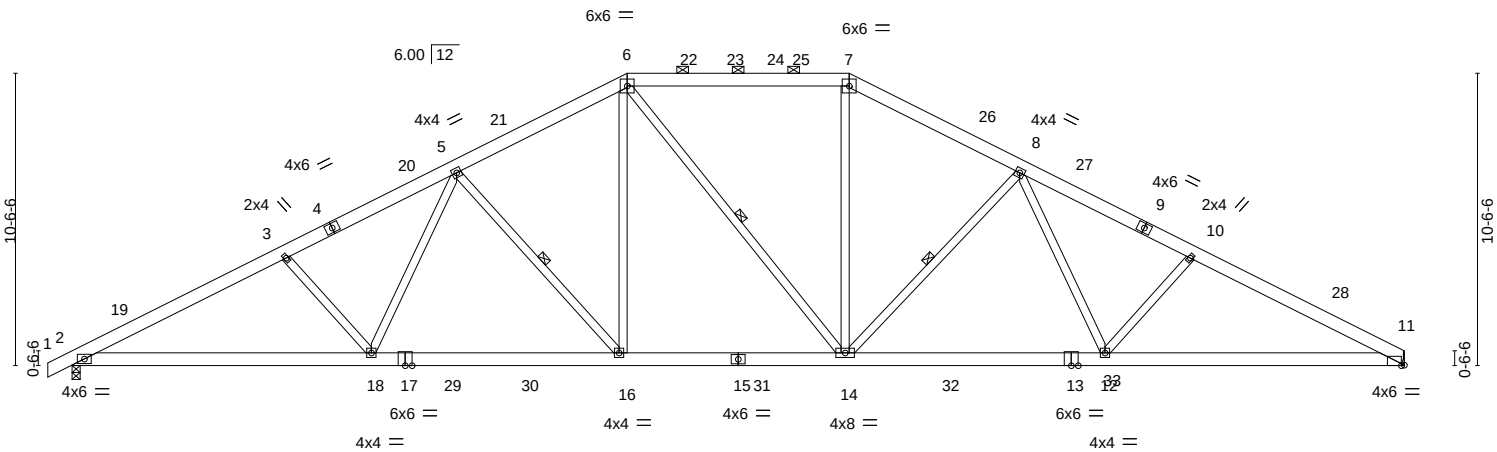

10-9-6	20-0-0	27-8-8	28-0-0	37-2-10	48-0-0
10-9-6	9-2-10	7-8-8	0-3-8	9-2-10	10-9-6

Plate Offsets (X,Y)-- [11:0-1-4,Edge]

LOADING (psf)		SPACING- 2-0-0	CSI.		DEFL. in (loc) l/defl L/d	PLATES	GRIP
TCLL (roof)	20.0	Plate Grip DOL 1.15	TC	0.60	Vert(LL) -0.23 12-14 >999 240	MT20	197/144
Snow (Pf/Pg)	16.5/15.0	Lumber DOL 1.15	BC	0.97	Vert(CT) -0.41 16-18 >999 180		
TCDL	10.0	Rep Stress Incr YES	WB	0.40	Horz(CT) 0.16 11 n/a n/a		
BCLL	0.0 *	Code IRC2018/TPI2014	Matrix-S			Weight: 347 lb	FT = 20%
BCDL	10.0						

LUMBER-
TOP CHORD 2x6 SP No.2
BOT CHORD 2x6 SP No.2
WEBS 2x4 SP No.3 *Except*
6-14: 2x4 SP No.2 or 2x4 SPF No.2

BRACING-
TOP CHORD Structural wood sheathing directly applied or 3-0-9 oc purlins, except 2-0-0 oc purlins (4-0-14 max.): 6-7.
BOT CHORD Rigid ceiling directly applied or 2-2-0 oc bracing.
WEBS 1 Row at midpt 5-16, 8-14, 6-14

REACTIONS. (size) 2=0-3-8, 11=Mechanical
Max Horz 2=146(LC 20)
Max Uplift 2=-64(LC 16), 11=-49(LC 17)
Max Grav 2=2179(LC 3), 11=2122(LC 3)

FORCES. (lb) - Max. Comp./Max. Ten. - All forces 250 (lb) or less except when shown.
TOP CHORD 2-3=-4009/123, 3-5=-3787/130, 5-6=-2920/173, 6-7=-2538/181, 7-8=-2891/175, 8-10=-3804/135, 10-11=-4033/131
BOT CHORD 2-18=-157/3514, 16-18=-39/3034, 14-16=0/2536, 12-14=0/3037, 11-12=-47/3544
WEBS 3-18=-375/176, 5-18=-9/713, 6-16=-30/972, 5-16=-809/167, 7-14=0/952, 8-14=-830/167, 8-12=-10/742, 10-12=-398/183

NOTES-
1) Unbalanced roof live loads have been considered for this design.
2) Wind: ASCE 7-16; Vult=120mph (3-second gust) Vasd=95mph; TCDL=6.0psf; BCDL=6.0psf; h=25ft; Cat. II; Exp B; Enclosed; MWFRS (envelope) gable end zone and C-C Exterior(2E) -0-10-8 to 2-1-8, Interior(1) 2-1-8 to 20-0-0, Exterior(2R) 20-0-0 to 24-2-15, Interior(1) 24-2-15 to 28-0-0, Exterior(2R) 28-0-0 to 32-2-15, Interior(1) 32-2-15 to 47-11-4 zone;C-C for members and forces & MWFRS for reactions shown; Lumber DOL=1.60 plate grip DOL=1.60
3) TCLL: ASCE 7-16; Pr=20.0 psf (roof LL: Lum DOL=1.15 Plate DOL=1.15); Pg=15.0 psf; Pf=16.5 psf (Lum DOL=1.15 Plate DOL=1.15); Is=1.0; Rough Cat B; Partially Exp.; Ce=1.0; Cs=1.00; Ct=1.10, Lu=50-0-0; Min. flat roof snow load governs. Rain surcharge applied to all exposed surfaces with slopes less than 0.500/12 in accordance with IBC 1608.3.4.
4) Unbalanced snow loads have been considered for this design.
5) This truss has been designed for greater of min roof live load of 12.0 psf or 1.00 times flat roof load of 11.6 psf on overhangs non-concurrent with other live loads.
6) Provide adequate drainage to prevent water ponding.
7) This truss has been designed for a 10.0 psf bottom chord live load nonconcurrent with any other live loads.
8) * This truss has been designed for a live load of 20.0psf on the bottom chord in all areas where a rectangle 3-6-0 tall by 2-0-0 wide will fit between the bottom chord and any other members, with BCDL = 10.0psf.
9) Refer to girder(s) for truss to truss connections.
10) Provide mechanical connection (by others) of truss to bearing plate capable of withstanding 100 lb uplift at joint(s) 11.
11) One H2.5A Simpson Strong-Tie connectors recommended to connect truss to bearing walls due to UPLIFT at jt(s) 2. This connection is for uplift only and does not consider lateral forces.
12) This truss is designed in accordance with the 2018 International Residential Code sections R502.11.1 and R802.10.2 and referenced standard ANSI/TPI 1.
13) Graphical purlin representation does not depict the size or the orientation of the purlin along the top and/or bottom chord.

January 27,2022

WARNING - Verify design parameters and READ NOTES ON THIS AND INCLUDED MITEK REFERENCE PAGE MII-7473 rev. 5/19/2020 BEFORE USE.
Design valid for use only with MiTek® connectors. This design is based only upon parameters shown, and is for an individual building component, not a truss system. Before use, the building designer must verify the applicability of design parameters and properly incorporate this design into the overall building design. Bracing indicated is to prevent buckling of individual truss web and/or chord members only. Additional temporary and permanent bracing is always required for stability and to prevent collapse with possible personal injury and property damage. For general guidance regarding the fabrication, storage, delivery, erection and bracing of trusses and truss systems, see **ANSI/TPI1 Quality Criteria, DSB-89 and BCSI Building Component Safety Information** available from Truss Plate Institute, 2670 Crain Highway, Suite 203 Waldorf, MD 20601

ENGINEERING BY TRENCO A MiTek Affiliate
818 Soundside Road
Edenton, NC 27932

Job	Truss	Truss Type	Qty	Ply	KB Home 150.1910.A Vault
150_1910_A_VA	A4E	PIGGYBACK BASE SUPPO	1	1	I49904344 Job Reference (optional)

84 Components (Dunn), Dunn, NC - 28334, 8.530 s Dec 6 2021 MiTek Industries, Inc. Wed Jan 26 11:28:57 2022 Page 1

ID:VMD62rz1yiHD_OqRtbnrlFztQ8K-XVQsA6aZp8dyjRRyFGYoEq7Oz6y4Ep9UHn0BL8zrVGa

-0-10-8 20-0-0 28-0-0 48-0-0

0-10-8 20-0-0 8-0-0 20-0-0

Scale = 1:83.8

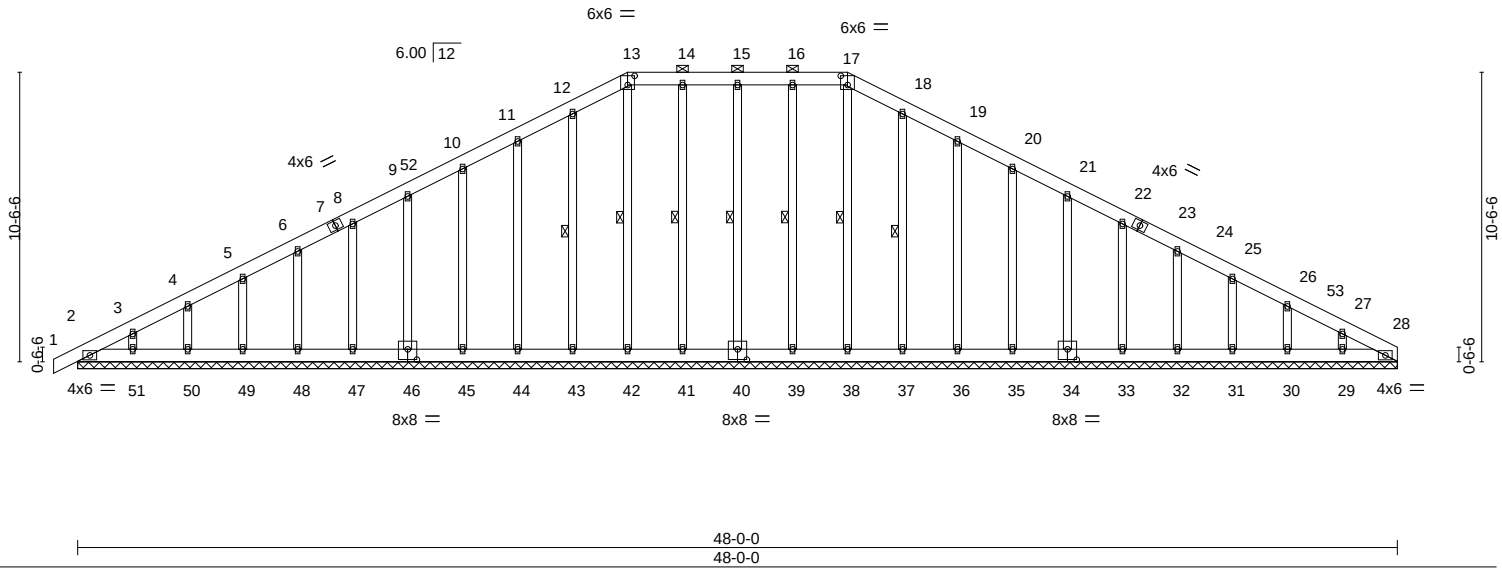

Plate Offsets (X,Y)-- [13:0-3-0,0-4-0], [17:0-3-0,0-4-0], [34:0-4-0,0-4-8], [40:0-4-0,0-4-8], [46:0-4-0,0-4-8]

LOADING (psf)		SPACING- 2-0-0	CSI.		DEFL.	in	(loc)	l/defl	L/d	PLATES	GRIP
TCLL (roof)	20.0	Plate Grip DOL 1.15	TC	0.04	Vert(LL)	-0.00	1	n/r	120	MT20	244/190
Snow (Pf/Pg)	16.5/15.0	Lumber DOL 1.15	BC	0.02	Vert(CT)	-0.00	1	n/r	120		
TCDL	10.0	Rep Stress Incr YES	WB	0.18	Horz(CT)	0.01	28	n/a	n/a		
BCLL	0.0 *	Code IRC2018/TPI2014	Matrix-S							Weight: 434 lb	FT = 20%
BCDL	10.0										

LUMBER-

TOP CHORD 2x6 SP No.2
BOT CHORD 2x6 SP No.2
OTHERS 2x4 SP No.3

BRACING-

TOP CHORD Structural wood sheathing directly applied or 6-0-0 oc purlins, except 2-0-0 oc purlins (6-0-0 max.): 13-17.
BOT CHORD Rigid ceiling directly applied or 10-0-0 oc bracing.
WEBS 1 Row at midpt 17-38, 16-39, 15-40, 14-41, 13-42, 12-43, 18-37

REACTIONS. All bearings 48-0-0.
(lb) - Max Horz 2=146(LC 16)
Max Uplift All uplift 100 lb or less at joint(s) 2, 39, 40, 41, 43, 44, 45, 46, 47, 48, 49, 50, 51, 37, 36, 35, 34, 33, 32, 31, 30, 29
Max Grav All reactions 250 lb or less at joint(s) 2, 38, 39, 40, 41, 42, 43, 44, 45, 46, 47, 48, 49, 50, 51, 37, 36, 35, 34, 33, 32, 31, 30, 29, 28

FORCES. (lb) - Max. Comp./Max. Ten. - All forces 250 (lb) or less except when shown.

NOTES-

1) Unbalanced roof live loads have been considered for this design.
2) Wind: ASCE 7-16; Vult=120mph (3-second gust) Vasd=95mph; TCDL=6.0psf; BCDL=6.0psf; h=25ft; Cat. II; Exp B; Enclosed; MWFRS (envelope) gable end zone and C-C Corner(3E) -0-10-8 to 2-0-0, Exterior(2N) 2-0-0 to 20-0-0, Corner(3R) 20-0-0 to 23-0-0, Exterior(2N) 23-0-0 to 28-0-0, Corner(3R) 28-0-0 to 31-0-0, Exterior(2N) 31-0-0 to 48-0-0 zone;C-C for members and forces & MWFRS for reactions shown; Lumber DOL=1.60 plate grip DOL=1.60
3) Truss designed for wind loads in the plane of the truss only. For studs exposed to wind (normal to the face), see Standard Industry Gable End Details as applicable, or consult qualified building designer as per ANSI/TPI 1.
4) TCLL: ASCE 7-16; Pr=20.0 psf (roof LL: Lum DOL=1.15 Plate DOL=1.15); Pg=15.0 psf; Pf=16.5 psf (Lum DOL=1.15 Plate DOL=1.15); Is=1.0; Rough Cat B; Partially Exp.; Ce=1.0; Cs=1.00; Ct=1.10, Lu=50-0-0; Min. flat roof snow load governs. Rain surcharge applied to all exposed surfaces with slopes less than 0.500/12 in accordance with IBC 1608.3.4.
5) Unbalanced snow loads have been considered for this design.
6) This truss has been designed for greater of min roof live load of 12.0 psf or 1.00 times flat roof load of 11.6 psf on overhangs non-concurrent with other live loads.
7) Provide adequate drainage to prevent water ponding.
8) All plates are 2x4 MT20 unless otherwise indicated.
9) Gable requires continuous bottom chord bearing.
10) Gable studs spaced at 2-0-0 oc.
11) This truss has been designed for a 10.0 psf bottom chord live load nonconcurrent with any other live loads.
12) * This truss has been designed for a live load of 20.0psf on the bottom chord in all areas where a rectangle 3-6-0 tall by 2-0-0 wide will fit between the bottom chord and any other members.
13) n/a
14) Beveled plate or shim required to provide full bearing surface with truss chord at joint(s) 28.
15) This truss is designed in accordance with the 2018 International Residential Code sections R502.11.1 and R802.10.2 and referenced standard ANSI/TPI 1.

Continued on page 2

NORTH CAROLINA PROFESSIONAL SEAL 044925 ENGINEER SCOTT M. SEVIER

January 27,2022

WARNING - Verify design parameters and READ NOTES ON THIS AND INCLUDED MITEK REFERENCE PAGE MII-7473 rev. 5/19/2020 BEFORE USE.
Design valid for use only with MiTek® connectors. This design is based only upon parameters shown, and is for an individual building component, not a truss system. Before use, the building designer must verify the applicability of design parameters and properly incorporate this design into the overall building design. Bracing indicated is to prevent buckling of individual truss web and/or chord members only. Additional temporary and permanent bracing is always required for stability and to prevent collapse with possible personal injury and property damage. For general guidance regarding the fabrication, storage, delivery, erection and bracing of trusses and truss systems, see **ANSI/TPI1 Quality Criteria, DSB-89 and BCSI Building Component Safety Information** available from Truss Plate Institute, 2670 Crain Highway, Suite 203 Waldorf, MD 20601

ENGINEERING BY TRENCO A MiTek Affiliate
818 Soundside Road
Edenton, NC 27932

NOTES-

16) Graphical purlin representation does not depict the size or the orientation of the purlin along the top and/or bottom chord.

WARNING - Verify design parameters and READ NOTES ON THIS AND INCLUDED MITEK REFERENCE PAGE MII-7473 rev. 5/19/2020 BEFORE USE.
Design valid for use only with MiTek® connectors. This design is based only upon parameters shown, and is for an individual building component, not a truss system. Before use, the building designer must verify the applicability of design parameters and properly incorporate this design into the overall building design. Bracing indicated is to prevent buckling of individual truss web and/or chord members only. Additional temporary and permanent bracing is always required for stability and to prevent collapse with possible personal injury and property damage. For general guidance regarding the fabrication, storage, delivery, erection and bracing of trusses and truss systems, see **ANSI/TPI1 Quality Criteria, DSB-89 and BCSI Building Component Safety Information** available from Truss Plate Institute, 2670 Crain Highway, Suite 203 Waldorf, MD 20601

ENGINEERING BY TRENCO A MiTek Affiliate
818 Soundside Road
Edenton, NC 27932

Job	Truss	Truss Type	Qty	Ply	KB Home 150.1910.A Vault
150_1910_A_VA	B1	COMMON	1	1	I49904345 Job Reference (optional)

84 Components (Dunn), Dunn, NC - 28334, 8.530 s Dec 6 2021 MiTek Industries, Inc. Wed Jan 26 11:28:59 2022 Page 1
ID:VMD62rz1yiHD_OqRtbnrlFztQ8K-TuYcbnbqLmtgykbLNhbGJFDY?vWeikXnk5VIQ1zrVGY

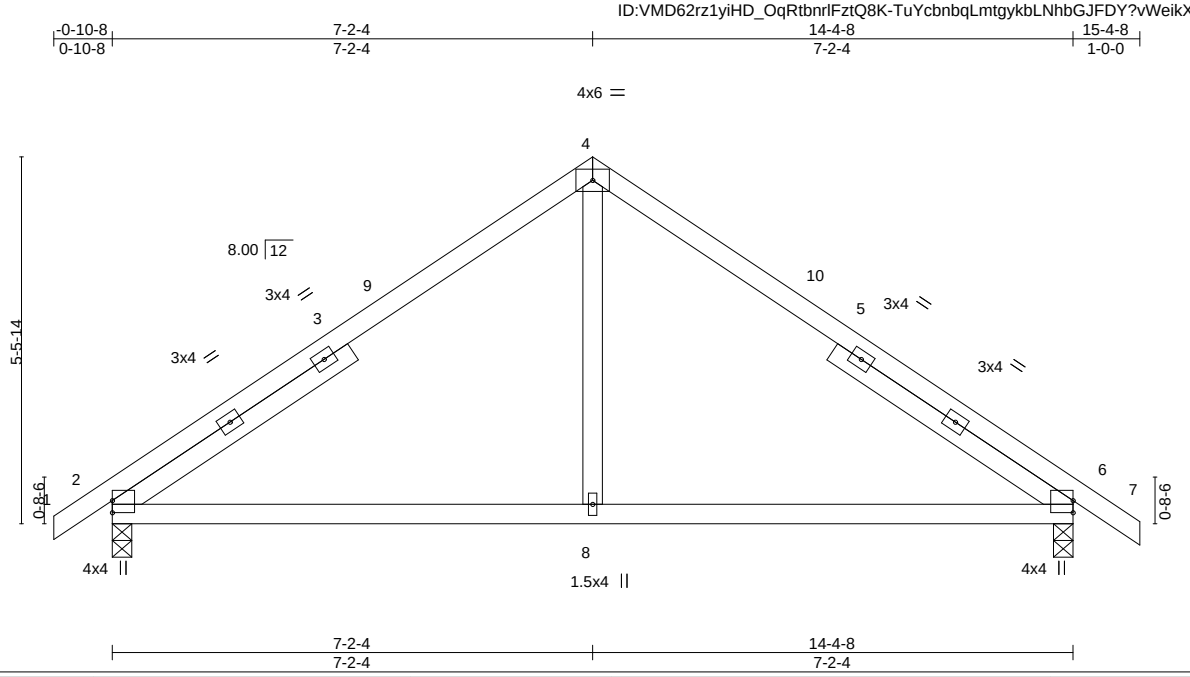

LOADING (psf)		SPACING-	2-0-0	CSI.		DEFL.	in	(loc)	l/defl	L/d	PLATES	GRIP
TCLL (roof)	20.0	Plate Grip DOL	1.15	TC	0.77	Vert(LL)	-0.05	6-8	>999	240	MT20	197/144
Snow (Pf/Pg)	11.6/15.0	Lumber DOL	1.15	BC	0.53	Vert(CT)	-0.11	2-8	>999	180		
TCDL	10.0	Rep Stress Incr	YES	WB	0.13	Horz(CT)	0.01	6	n/a	n/a		
BCLL	0.0 *	Code IRC2018/TPI2014		Matrix-S							Weight: 71 lb	FT = 20%
BCDL	10.0											

LUMBER-
TOP CHORD 2x4 SP No.2 or 2x4 SPF No.2
BOT CHORD 2x4 SP No.2 or 2x4 SPF No.2
WEBS 2x4 SP No.3
SLIDER Left 2x4 SP No.3 4-3-2, Right 2x4 SP No.3 4-3-2

BRACING-
TOP CHORD Structural wood sheathing directly applied or 4-9-13 oc purlins.
BOT CHORD Rigid ceiling directly applied or 10-0-0 oc bracing.

REACTIONS. (size) 2=0-3-8, 6=0-3-8
Max Horz 2=-109(LC 12)
Max Uplift 2=-29(LC 14), 6=-31(LC 15)
Max Grav 2=627(LC 2), 6=635(LC 2)

FORCES. (lb) - Max. Comp./Max. Ten. - All forces 250 (lb) or less except when shown.
TOP CHORD 2-4=-679/74, 4-6=-680/74
BOT CHORD 2-8=0/450, 6-8=0/450
WEBS 4-8=0/335

NOTES-
1) Unbalanced roof live loads have been considered for this design.
2) Wind: ASCE 7-16; Vult=120mph (3-second gust) Vasd=95mph; TCDL=6.0psf; BCDL=6.0psf; h=25ft; Cat. II; Exp B; Enclosed; MWFRS (envelope) gable end zone and C-C Exterior(2E) -0-10-8 to 2-1-8, Interior(1) 2-1-8 to 7-2-4, Exterior(2R) 7-2-4 to 10-2-4, Interior(1) 10-2-4 to 15-4-8 zone;C-C for members and forces & MWFRS for reactions shown; Lumber DOL=1.60 plate grip DOL=1.60
3) TCLL: ASCE 7-16; Pr=20.0 psf (roof LL: Lum DOL=1.15 Plate DOL=1.15); Pg=15.0 psf; Pf=11.6 psf (Lum DOL=1.15 Plate DOL=1.15); Is=1.0; Rough Cat B; Partially Exp.; Ce=1.0; Cs=1.00; Ct=1.10
4) This truss has been designed for greater of min roof live load of 12.0 psf or 1.00 times flat roof load of 11.6 psf on overhangs non-concurrent with other live loads.
5) This truss has been designed for a 10.0 psf bottom chord live load nonconcurrent with any other live loads.
6) * This truss has been designed for a live load of 20.0psf on the bottom chord in all areas where a rectangle 3-6-0 tall by 2-0-0 wide will fit between the bottom chord and any other members.
7) One H2.5A Simpson Strong-Tie connectors recommended to connect truss to bearing walls due to UPLIFT at jt(s) 2 and 6. This connection is for uplift only and does not consider lateral forces.
8) This truss is designed in accordance with the 2018 International Residential Code sections R502.11.1 and R802.10.2 and referenced standard ANSI/TPI 1.

January 27,2022

WARNING - Verify design parameters and READ NOTES ON THIS AND INCLUDED MITEK REFERENCE PAGE MII-7473 rev. 5/19/2020 BEFORE USE.
Design valid for use only with MiTek® connectors. This design is based only upon parameters shown, and is for an individual building component, not a truss system. Before use, the building designer must verify the applicability of design parameters and properly incorporate this design into the overall building design. Bracing indicated is to prevent buckling of individual truss web and/or chord members only. Additional temporary and permanent bracing is always required for stability and to prevent collapse with possible personal injury and property damage. For general guidance regarding the fabrication, storage, delivery, erection and bracing of trusses and truss systems, see **ANSI/TPI1 Quality Criteria, DSB-89 and BCSI Building Component Safety Information** available from Truss Plate Institute, 2670 Crain Highway, Suite 203 Waldorf, MD 20601

ENGINEERING BY TRENCO A MiTek Affiliate
818 Soundside Road
Edenton, NC 27932

Job	Truss	Truss Type	Qty	Ply	KB Home 150.1910.A Vault
150_1910_A_VA	BE	GABLE	1	1	I49904346 Job Reference (optional)

84 Components (Dunn), Dunn, NC - 28334, 8.530 s Dec 6 2021 MiTek Industries, Inc. Wed Jan 26 11:29:00 2022 Page 1
ID:VMD62rz1yiHD_OqRtbnrlFztQ8K-y45_o7cS63?WauAXwP6VsTlv3J_ORC6wzlEryTzrVGX

-0-10-8 | 7-2-4 | 14-4-8 | 15-3-0
0-10-8 | 7-2-4 | 7-2-4 | 0-10-8

Scale = 1:34.9

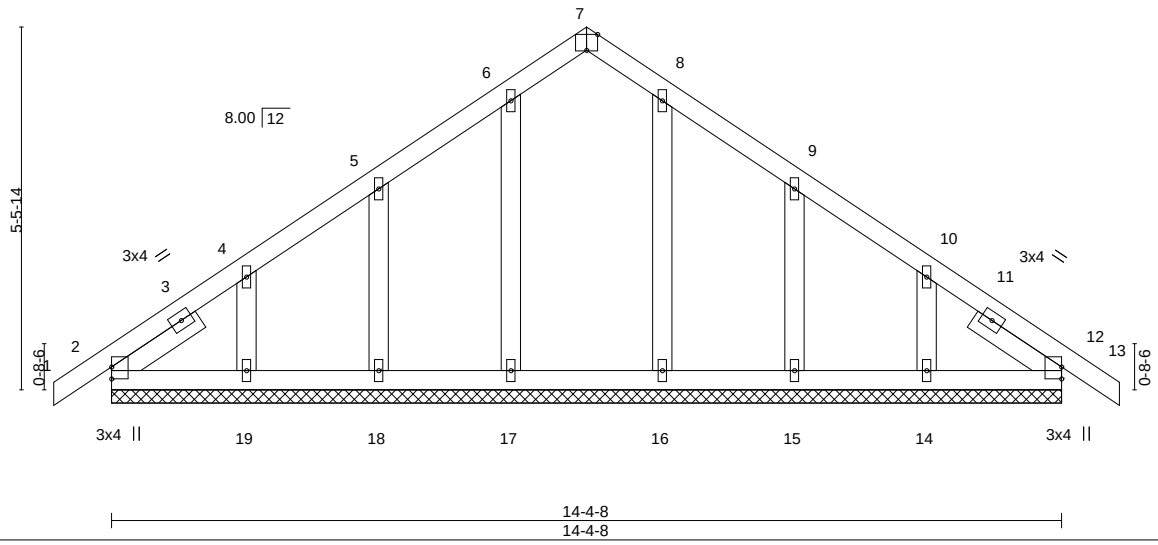

Plate Offsets (X,Y)-- [7:0-2-0,Edge]

LOADING (psf)		SPACING- 2-0-0	CSI.		DEFL. in (loc) l/defl L/d	PLATES GRIP
TCLL (roof)	20.0	Plate Grip DOL 1.15	TC	0.05	Vert(LL) -0.00 12 n/r 120	MT20 197/144
Snow (Pf/Pg)	11.6/15.0	Lumber DOL 1.15	BC	0.05	Vert(CT) -0.00 12 n/r 120	
TCDL	10.0	Rep Stress Incr YES	WB	0.04	Horz(CT) 0.00 12 n/a n/a	
BCLL	0.0 *	Code IRC2018/TPI2014	Matrix-S			Weight: 81 lb FT = 20%
BCDL	10.0					

LUMBER-
TOP CHORD 2x4 SP No.2 or 2x4 SPF No.2
BOT CHORD 2x4 SP No.2 or 2x4 SPF No.2
OTHERS 2x4 SP No.3
SLIDER Left 2x4 SP No.3 1-6-10, Right 2x4 SP No.3 1-6-10

BRACING-
TOP CHORD Structural wood sheathing directly applied or 6-0-0 oc purlins.
BOT CHORD Rigid ceiling directly applied or 10-0-0 oc bracing.

REACTIONS. All bearings 14-4-8.
(lb) - Max Horz 2=-108(LC 12)
Max Uplift All uplift 100 lb or less at joint(s) 17, 18, 19, 15, 14
Max Grav All reactions 250 lb or less at joint(s) 2, 12, 17, 18, 19, 16, 15, 14

FORCES. (lb) - Max. Comp./Max. Ten. - All forces 250 (lb) or less except when shown.

NOTES-
1) Unbalanced roof live loads have been considered for this design.
2) Wind: ASCE 7-16; Vult=120mph (3-second gust) Vasd=95mph; TCDL=6.0psf; BCDL=6.0psf; h=25ft; Cat. II; Exp B; Enclosed; MWFRS (envelope) gable end zone and C-C Corner(3E) -0-10-8 to 2-0-8, Exterior(2N) 2-0-8 to 7-2-4, Corner(3R) 7-2-4 to 10-4-0, Exterior(2N) 10-4-0 to 15-3-0 zone;C-C for members and forces & MWFRS for reactions shown; Lumber DOL=1.60 plate grip DOL=1.60
3) Truss designed for wind loads in the plane of the truss only. For studs exposed to wind (normal to the face), see Standard Industry Gable End Details as applicable, or consult qualified building designer as per ANSI/TPI 1.
4) TCLL: ASCE 7-16; Pr=20.0 psf (roof LL: Lum DOL=1.15 Plate DOL=1.15); Pg=15.0 psf; Pf=11.6 psf (Lum DOL=1.15 Plate DOL=1.15); Is=1.0; Rough Cat B; Partially Exp.; Ce=1.0; Cs=1.00; Ct=1.10
5) This truss has been designed for greater of min roof live load of 12.0 psf or 1.00 times flat roof load of 11.6 psf on overhangs non-concurrent with other live loads.
6) All plates are 1.5x4 MT20 unless otherwise indicated.
7) Gable requires continuous bottom chord bearing.
8) Gable studs spaced at 2-0-0 oc.
9) This truss has been designed for a 10.0 psf bottom chord live load nonconcurrent with any other live loads.
10) * This truss has been designed for a live load of 20.0psf on the bottom chord in all areas where a rectangle 3-6-0 tall by 2-0-0 wide will fit between the bottom chord and any other members, with BCDL = 10.0psf.
11) n/a
12) This truss is designed in accordance with the 2018 International Residential Code sections R502.11.1 and R802.10.2 and referenced standard ANSI/TPI 1.

January 27,2022

WARNING - Verify design parameters and READ NOTES ON THIS AND INCLUDED MITEK REFERENCE PAGE MII-7473 rev. 5/19/2020 BEFORE USE.
Design valid for use only with MiTek® connectors. This design is based only upon parameters shown, and is for an individual building component, not a truss system. Before use, the building designer must verify the applicability of design parameters and properly incorporate this design into the overall building design. Bracing indicated is to prevent buckling of individual truss web and/or chord members only. Additional temporary and permanent bracing is always required for stability and to prevent collapse with possible personal injury and property damage. For general guidance regarding the fabrication, storage, delivery, erection and bracing of trusses and truss systems, see **ANSI/TPI1 Quality Criteria, DSB-89 and BCSI Building Component Safety Information** available from Truss Plate Institute, 2670 Crain Highway, Suite 203 Waldorf, MD 20601

ENGINEERING BY TRENCO A MiTek Affiliate
818 Soundside Road
Edenton, NC 27932

Job	Truss	Truss Type	Qty	Ply	KB Home 150.1910.A Vault
150_1910_A_VA	BG	COMMON GIRDER	1	3	I49904347 Job Reference (optional)

84 Components (Dunn), Dunn, NC - 28334, 8.530 s Dec 6 2021 MiTek Industries, Inc. Wed Jan 26 11:29:02 2022 Page 1
ID:Ov_vMYxBAji_08MKTWr6UgzrWcO-uTDlDpeiehGEpCKw2p8zxurBI7UMvzdDQ2jy0MzrVGV

Scale = 1:35.6

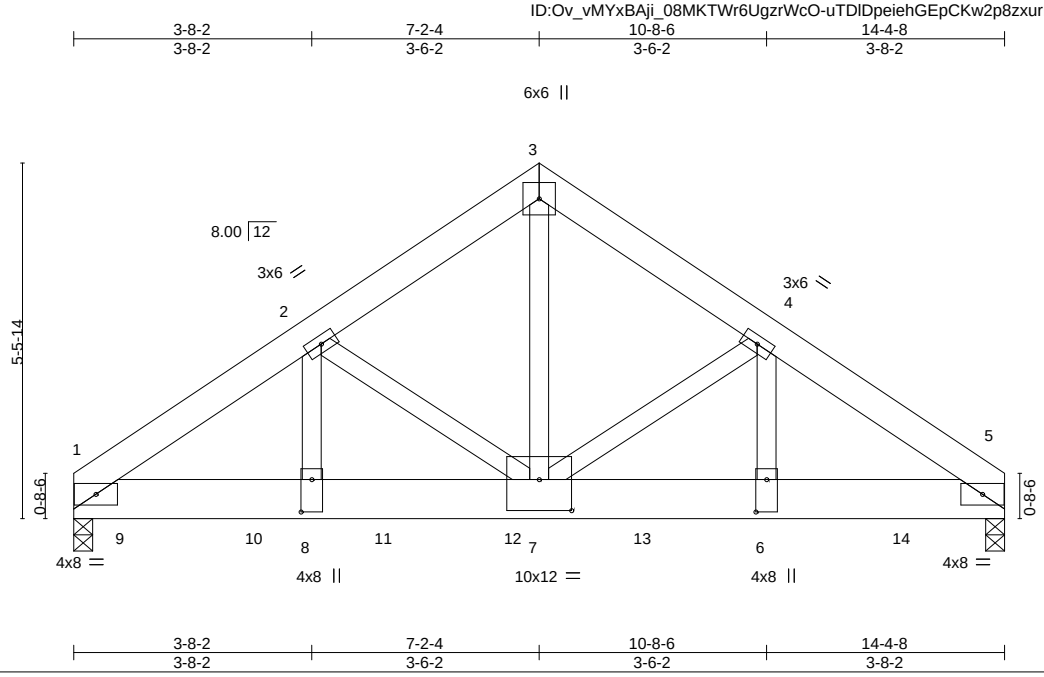

Plate Offsets (X,Y)-- [6:0-6-0,0-2-0], [7:0-6-0,0-5-12], [8:0-6-0,0-2-0]

LOADING (psf)		SPACING- 2-0-0	CSI.		DEFL.	in	(loc)	l/defl	L/d	PLATES	GRIP
TCLL (roof)	20.0	Plate Grip DOL 1.15	TC	0.20	Vert(LL)	-0.05	6-7	>999	240	MT20	197/144
Snow (Pf/Pg)	11.6/15.0	Lumber DOL 1.15	BC	0.72	Vert(CT)	-0.09	6-7	>999	180		
TCDL	10.0	Rep Stress Incr YES	WB	0.62	Horz(CT)	0.03	5	n/a	n/a		
BCLL	0.0 *	Code IRC2018/TPI2014	Matrix-S							Weight: 330 lb	FT = 20%
BCDL	10.0										

LUMBER-
TOP CHORD 2x6 SP No.2
BOT CHORD 2x8 SP No.2
WEBS 2x4 SP No.3 *Except*
3-7: 2x4 SP No.2 or 2x4 SPF No.2

BRACING-
TOP CHORD Structural wood sheathing directly applied or 6-0-0 oc purlins.
BOT CHORD Rigid ceiling directly applied or 10-0-0 oc bracing.

REACTIONS. (size) 1=(0-3-8 + TBE4 Simpson Strong-Tie) (req. 0-4-5), 5=(0-3-8 + TBE4 Simpson Strong-Tie) (req. 0-3-14)
Max Horz 1=-98(LC 31)
Max Uplift 1=-241(LC 10), 5=-219(LC 11)
Max Grav 1=8261(LC 3), 5=7441(LC 3)

FORCES. (lb) - Max. Comp./Max. Ten. - All forces 250 (lb) or less except when shown.
TOP CHORD 1-2=-10197/304, 2-3=-7191/259, 3-4=-7190/259, 4-5=-10198/306
BOT CHORD 1-8=-265/8195, 7-8=-265/8195, 6-7=-207/8191, 5-6=-207/8191
WEBS 3-7=-223/7546, 4-7=-2715/156, 4-6=-66/3574, 2-7=-2721/154, 2-8=-66/3567

NOTES-
1) 3-ply truss to be connected together with 10d (0.131"x3") nails as follows:
Top chords connected as follows: 2x6 - 2 rows staggered at 0-9-0 oc.
Bottom chords connected as follows: 2x8 - 4 rows staggered at 0-4-0 oc.
Webs connected as follows: 2x4 - 1 row at 0-9-0 oc.
2) All loads are considered equally applied to all plies, except if noted as front (F) or back (B) face in the LOAD CASE(S) section. Ply to ply connections have been provided to distribute only loads noted as (F) or (B), unless otherwise indicated.
3) Unbalanced roof live loads have been considered for this design.
4) Wind: ASCE 7-16; Vult=120mph (3-second gust) Vasd=95mph; TCDL=6.0psf; BCDL=6.0psf; h=25ft; Cat. II; Exp B; Enclosed; MWFRS (envelope) gable end zone; Lumber DOL=1.60 plate grip DOL=1.60
5) TCLL: ASCE 7-16; Pr=20.0 psf (roof LL: Lum DOL=1.15 Plate DOL=1.15); Pg=15.0 psf; Pf=11.6 psf (Lum DOL=1.15 Plate DOL=1.15); Is=1.0; Rough Cat B; Partially Exp.; Ce=1.0; Cs=1.00; Ct=1.10
6) This truss has been designed for a 10.0 psf bottom chord live load nonconcurrent with any other live loads.
7) * This truss has been designed for a live load of 20.0psf on the bottom chord in all areas where a rectangle 3-6-0 tall by 2-0-0 wide will fit between the bottom chord and any other members.
8) TBE4 Simpson Strong-Tie connectors recommended to connect truss to bearing walls due to UPLIFT at jt(s) 1 and 5. This connection is for uplift only and does not consider lateral forces.
9) This truss is designed in accordance with the 2018 International Residential Code sections R502.11.1 and R802.10.2 and referenced standard ANSI/TPI 1.
10) Hanger(s) or other connection device(s) shall be provided sufficient to support concentrated load(s) 2105 lb down and 66 lb up at 0-9-12, 2102 lb down and 69 lb up at 2-9-12, 2102 lb down and 69 lb up at 4-9-12, 2102 lb down and 69 lb up at 6-9-12, 2102 lb down and 69 lb up at 8-9-12, and 2102 lb down and 69 lb up at 10-9-12, and 2102 lb down and 69 lb up at 12-9-12 on bottom chord. The design/selection of such connection device(s) is the responsibility of others.

LOAD CASE(S) Standard

January 27,2022

Continued on page 2

WARNING - Verify design parameters and READ NOTES ON THIS AND INCLUDED MITEK REFERENCE PAGE MII-7473 rev. 5/19/2020 BEFORE USE.
Design valid for use only with MiTek® connectors. This design is based only upon parameters shown, and is for an individual building component, not a truss system. Before use, the building designer must verify the applicability of design parameters and properly incorporate this design into the overall building design. Bracing indicated is to prevent buckling of individual truss web and/or chord members only. Additional temporary and permanent bracing is always required for stability and to prevent collapse with possible personal injury and property damage. For general guidance regarding the fabrication, storage, delivery, erection and bracing of trusses and truss systems, see **ANSI/TPI1 Quality Criteria, DSB-89 and BCSI Building Component Safety Information** available from Truss Plate Institute, 2670 Crain Highway, Suite 203 Waldorf, MD 20601

ENGINEERING BY TRENCO A MiTek Affiliate
818 Soundside Road
Edenton, NC 27932

LOAD CASE(S) Standard

1) Dead + Snow (balanced): Lumber Increase=1.15, Plate Increase=1.15
   Uniform Loads (plf)
   Vert: 1-3=-43, 3-5=-43, 1-5=-20
   Concentrated Loads (lb)
   Vert: 6=-1768(B) 9=-1772(B) 10=-1768(B) 11=-1768(B) 12=-1768(B) 13=-1768(B) 14=-1768(B)

WARNING - Verify design parameters and READ NOTES ON THIS AND INCLUDED MITEK REFERENCE PAGE MII-7473 rev. 5/19/2020 BEFORE USE.
Design valid for use only with MiTek® connectors. This design is based only upon parameters shown, and is for an individual building component, not a truss system. Before use, the building designer must verify the applicability of design parameters and properly incorporate this design into the overall building design. Bracing indicated is to prevent buckling of individual truss web and/or chord members only. Additional temporary and permanent bracing is always required for stability and to prevent collapse with possible personal injury and property damage. For general guidance regarding the fabrication, storage, delivery, erection and bracing of trusses and truss systems, see **ANSI/TPI1 Quality Criteria, DSB-89 and BCSI Building Component Safety Information** available from Truss Plate Institute, 2670 Crain Highway, Suite 203 Waldorf, MD 20601

ENGINEERING BY TRENCO A MiTek Affiliate
818 Soundside Road
Edenton, NC 27932

Job	Truss	Truss Type	Qty	Ply	KB Home 150.1910.A Vault
150_1910_A_VA	PB1	Piggyback	25	1	I49904348 Job Reference (optional)

8.530 s Dec 6 2021 MiTek Industries, Inc. Wed Jan 26 12:44:05 2022 Page 1
ID:VMD62rz1yiHD_OqRtbnrlFztQ8K-om527vabADDo7pCrW?AsTzrk2JWWTgX0u70kaszrUA8

8-1-10
8-1-10

Scale = 1:15.3

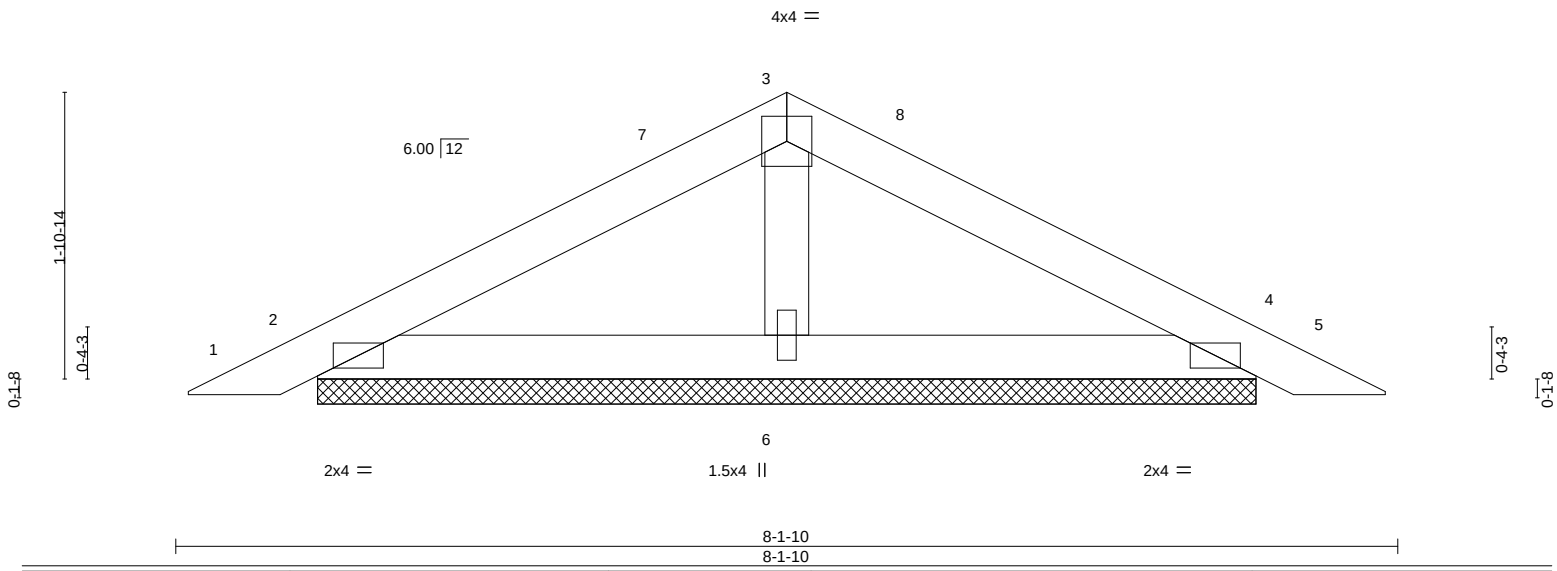

LOADING (psf)		SPACING-	2-0-0	CSI.		DEFL.	in	(loc)	l/defl	L/d	PLATES	GRIP
TCLL (roof)	20.0	Plate Grip DOL	1.15	TC	0.19	Vert(LL)	0.00	5	n/r	120	MT20	197/144
Snow (Pf/Pg)	11.6/15.0	Lumber DOL	1.15	BC	0.10	Vert(CT)	0.01	5	n/r	120		
TCDL	10.0	Rep Stress Incr	YES	WB	0.03	Horz(CT)	0.00	4	n/a	n/a		
BCLL	0.0 *	Code IRC2018/TPI2014		Matrix-P							Weight: 24 lb	FT = 20%
BCDL	10.0											

LUMBER-
TOP CHORD 2x4 SP No.2 or 2x4 SPF No.2
BOT CHORD 2x4 SP No.2 or 2x4 SPF No.2
WEBS 2x4 SP No.3

BRACING-
TOP CHORD Sheathed or 6-0-0 oc purlins.
BOT CHORD Rigid ceiling directly applied or 10-0-0 oc bracing.

REACTIONS. (lb/size) 2=124/6-2-15 (min. 0-1-8), 4=124/6-2-15 (min. 0-1-8), 6=195/6-2-15 (min. 0-1-8)
Max Horz 2=25(LC 16)
Max Uplift 2=-27(LC 16), 4=-31(LC 17)
Max Grav 2=169(LC 23), 4=169(LC 24), 6=241(LC 2)

FORCES. (lb) - Max. Comp./Max. Ten. - All forces 250 (lb) or less except when shown.

NOTES-
1) Unbalanced roof live loads have been considered for this design.
2) Wind: ASCE 7-16; Vult=120mph (3-second gust) Vasd=95mph; TCDL=6.0psf; BCDL=6.0psf; h=25ft; Cat. II; Exp B; Enclosed; MWFRS (envelope) gable end zone and C-C Exterior(2E) 0-4-11 to 3-4-11, Interior(1) 3-4-11 to 4-0-13, Exterior(2R) 4-0-13 to 7-2-4, Interior(1) 7-2-4 to 7-8-15 zone;C-C for members and forces & MWFRS for reactions shown; Lumber DOL=1.60 plate grip DOL=1.60
3) TCLL: ASCE 7-16; Pr=20.0 psf (roof LL: Lum DOL=1.15 Plate DOL=1.15); Pg=15.0 psf; Pf=11.6 psf (Lum DOL=1.15 Plate DOL=1.15); Is=1.0; Rough Cat B; Partially Exp.; Ce=1.0; Cs=1.00; Ct=1.10
4) Unbalanced snow loads have been considered for this design.
5) This truss has been designed for greater of min roof live load of 12.0 psf or 1.00 times flat roof load of 11.6 psf on overhangs non-concurrent with other live loads.
6) Gable requires continuous bottom chord bearing.
7) This truss has been designed for a 10.0 psf bottom chord live load nonconcurrent with any other live loads.
8) * This truss has been designed for a live load of 20.0psf on the bottom chord in all areas where a rectangle 3-6-0 tall by 2-0-0 wide will fit between the bottom chord and any other members.
9) Provide mechanical connection (by others) of truss to bearing plate capable of withstanding 27 lb uplift at joint 2 and 31 lb uplift at joint 4.
10) This truss is designed in accordance with the 2018 International Residential Code sections R502.11.1 and R802.10.2 and referenced standard ANSI/TPI 1.
11) See Standard Industry Piggyback Truss Connection Detail for Connection to base truss as applicable, or consult qualified building designer.

LOAD CASE(S)
1) Dead + Snow (balanced): Lumber Increase=1.15, Plate Increase=1.15
Uniform Loads (plf)
Vert: 1-3=-43, 3-5=-43, 2-4=-20
2) Dead + Roof Live (balanced): Lumber Increase=1.15, Plate Increase=1.15
Uniform Loads (plf)
Vert: 1-3=-60, 3-5=-60, 2-4=-20
3) Dead + 0.75 Roof Live (balanced): Lumber Increase=1.15, Plate Increase=1.15

January 27,2022

Continued on page 2

WARNING - Verify design parameters and READ NOTES ON THIS AND INCLUDED MITEK REFERENCE PAGE MII-7473 rev. 5/19/2020 BEFORE USE.
Design valid for use only with MiTek® connectors. This design is based only upon parameters shown, and is for an individual building component, not a truss system. Before use, the building designer must verify the applicability of design parameters and properly incorporate this design into the overall building design. Bracing indicated is to prevent buckling of individual truss web and/or chord members only. Additional temporary and permanent bracing is always required for stability and to prevent collapse with possible personal injury and property damage. For general guidance regarding the fabrication, storage, delivery, erection and bracing of trusses and truss systems, see **ANSI/TPI1 Quality Criteria, DSB-89 and BCSI Building Component Safety Information** available from Truss Plate Institute, 2670 Crain Highway, Suite 203 Waldorf, MD 20601

ENGINEERING BY
TRENCO
A MiTek Affiliate
818 Soundside Road
Edenton, NC 27932

LOAD CASE(S)

Uniform Loads (plf)
Vert: 1-3=-50, 3-5=-50, 2-4=-20

4) Dead + 0.75 Snow (balanced): Lumber Increase=1.15, Plate Increase=1.15
Uniform Loads (plf)
Vert: 1-3=-37, 3-5=-37, 2-4=-20

5) Dead + 0.75 Snow (Unbal. Left): Lumber Increase=1.15, Plate Increase=1.15
Uniform Loads (plf)
Vert: 1-3=-53, 3-5=-25, 2-4=-20

6) Dead + 0.75 Snow (Unbal. Right): Lumber Increase=1.15, Plate Increase=1.15
Uniform Loads (plf)
Vert: 1-3=-25, 3-5=-53, 2-4=-20

7) Dead + Uninhabitable Attic Without Storage: Lumber Increase=1.25, Plate Increase=1.25
Uniform Loads (plf)
Vert: 1-3=-20, 3-5=-20, 2-4=-40

8) Dead + 0.6 C-C Wind (Pos. Internal) Case 1: Lumber Increase=1.60, Plate Increase=1.60
Uniform Loads (plf)
Vert: 1-2=49, 2-7=40, 3-7=30, 3-4=52, 4-5=26, 2-4=-12
Horz: 1-2=-61, 2-7=-52, 3-7=-42, 3-4=64, 4-5=38

9) Dead + 0.6 C-C Wind (Pos. Internal) Case 2: Lumber Increase=1.60, Plate Increase=1.60
Uniform Loads (plf)
Vert: 1-2=26, 2-3=52, 3-8=30, 4-8=40, 4-5=49, 2-4=-12
Horz: 1-2=-38, 2-3=-64, 3-8=42, 4-8=52, 4-5=61

10) Dead + 0.6 C-C Wind (Neg. Internal) Case 1: Lumber Increase=1.60, Plate Increase=1.60
Uniform Loads (plf)
Vert: 1-2=-4, 2-3=-41, 3-4=-41, 4-5=-36, 2-4=-20
Horz: 1-2=-16, 2-3=21, 3-4=-21, 4-5=-16

11) Dead + 0.6 C-C Wind (Neg. Internal) Case 2: Lumber Increase=1.60, Plate Increase=1.60
Uniform Loads (plf)
Vert: 1-2=-36, 2-3=-41, 3-4=-41, 4-5=-4, 2-4=-20
Horz: 1-2=16, 2-3=21, 3-4=-21, 4-5=16

12) Dead + 0.6 MWFRS Wind (Pos. Internal) Left: Lumber Increase=1.60, Plate Increase=1.60
Uniform Loads (plf)
Vert: 1-2=8, 2-3=-3, 3-4=7, 4-5=3, 2-4=-12
Horz: 1-2=-20, 2-3=-9, 3-4=19, 4-5=15

13) Dead + 0.6 MWFRS Wind (Pos. Internal) Right: Lumber Increase=1.60, Plate Increase=1.60
Uniform Loads (plf)
Vert: 1-2=3, 2-3=7, 3-4=-3, 4-5=8, 2-4=-12
Horz: 1-2=-15, 2-3=-19, 3-4=9, 4-5=20

14) Dead + 0.6 MWFRS Wind (Neg. Internal) Left: Lumber Increase=1.60, Plate Increase=1.60
Uniform Loads (plf)
Vert: 1-2=-15, 2-3=-20, 3-4=-10, 4-5=-5, 2-4=-20
Horz: 1-2=-5, 2-3=-0, 3-4=10, 4-5=15

15) Dead + 0.6 MWFRS Wind (Neg. Internal) Right: Lumber Increase=1.60, Plate Increase=1.60
Uniform Loads (plf)
Vert: 1-2=-5, 2-3=-10, 3-4=-20, 4-5=-15, 2-4=-20
Horz: 1-2=-15, 2-3=-10, 3-4=0, 4-5=5

16) Dead + 0.6 MWFRS Wind (Pos. Internal) 1st Parallel: Lumber Increase=1.60, Plate Increase=1.60
Uniform Loads (plf)
Vert: 1-2=15, 2-3=19, 3-4=6, 4-5=1, 2-4=-12
Horz: 1-2=-27, 2-3=-31, 3-4=18, 4-5=13

17) Dead + 0.6 MWFRS Wind (Pos. Internal) 2nd Parallel: Lumber Increase=1.60, Plate Increase=1.60
Uniform Loads (plf)
Vert: 1-2=1, 2-3=6, 3-4=19, 4-5=15, 2-4=-12
Horz: 1-2=-13, 2-3=-18, 3-4=31, 4-5=27

18) Dead + 0.6 MWFRS Wind (Pos. Internal) 3rd Parallel: Lumber Increase=1.60, Plate Increase=1.60
Uniform Loads (plf)
Vert: 1-2=15, 2-3=19, 3-4=6, 4-5=1, 2-4=-12
Horz: 1-2=-27, 2-3=-31, 3-4=18, 4-5=13

19) Dead + 0.6 MWFRS Wind (Pos. Internal) 4th Parallel: Lumber Increase=1.60, Plate Increase=1.60
Uniform Loads (plf)
Vert: 1-2=1, 2-3=6, 3-4=19, 4-5=15, 2-4=-12
Horz: 1-2=-13, 2-3=-18, 3-4=31, 4-5=27

20) Dead + 0.6 MWFRS Wind (Neg. Internal) 1st Parallel: Lumber Increase=1.60, Plate Increase=1.60
Uniform Loads (plf)
Vert: 1-2=7, 2-3=2, 3-4=-11, 4-5=-7, 2-4=-20
Horz: 1-2=-27, 2-3=-22, 3-4=9, 4-5=13

21) Dead + 0.6 MWFRS Wind (Neg. Internal) 2nd Parallel: Lumber Increase=1.60, Plate Increase=1.60
Uniform Loads (plf)
Vert: 1-2=-7, 2-3=-11, 3-4=2, 4-5=7, 2-4=-20
Horz: 1-2=-13, 2-3=-9, 3-4=22, 4-5=27

22) Dead + Snow on Overhangs: Lumber Increase=1.15, Plate Increase=1.15
Uniform Loads (plf)
Vert: 1-2=-43, 2-3=-20, 3-4=-20, 4-5=-43, 2-4=-20

23) Dead + Snow (Unbal. Left): Lumber Increase=1.15, Plate Increase=1.15
Uniform Loads (plf)
Vert: 1-3=-64, 3-5=-27, 2-4=-20

Continued on page 3

WARNING - Verify design parameters and READ NOTES ON THIS AND INCLUDED MITEK REFERENCE PAGE MII-7473 rev. 5/19/2020 BEFORE USE.
Design valid for use only with MiTek® connectors. This design is based only upon parameters shown, and is for an individual building component, not a truss system. Before use, the building designer must verify the applicability of design parameters and properly incorporate this design into the overall building design. Bracing indicated is to prevent buckling of individual truss web and/or chord members only. Additional temporary and permanent bracing is always required for stability and to prevent collapse with possible personal injury and property damage. For general guidance regarding the fabrication, storage, delivery, erection and bracing of trusses and truss systems, see **ANSI/TPI1 Quality Criteria, DSB-89 and BCSI Building Component Safety Information** available from Truss Plate Institute, 2670 Crain Highway, Suite 203 Waldorf, MD 20601

ENGINEERING BY TRENCO A MiTek Affiliate
818 Soundside Road
Edenton, NC 27932

LOAD CASE(S)

24) Dead + Snow (Unbal. Right): Lumber Increase=1.15, Plate Increase=1.15
Uniform Loads (plf)
Vert: 1-3=-27, 3-5=-64, 2-4=-20
25) Dead: Lumber Increase=0.90, Plate Increase=0.90 Plt. metal=0.90
Uniform Loads (plf)
Vert: 1-3=-20, 3-5=-20, 2-4=-20
26) Dead + 0.75 Snow (bal.) + 0.75(0.6 MWFRS Wind (Neg. Int) Left): Lumber Increase=1.60, Plate Increase=1.60
Uniform Loads (plf)
Vert: 1-2=-34, 2-3=-37, 3-4=-30, 4-5=-26, 2-4=-20
Horz: 1-2=-4, 2-3=-0, 3-4=8, 4-5=11
27) Dead + 0.75 Snow (bal.) + 0.75(0.6 MWFRS Wind (Neg. Int) Right): Lumber Increase=1.60, Plate Increase=1.60
Uniform Loads (plf)
Vert: 1-2=-26, 2-3=-30, 3-4=-37, 4-5=-34, 2-4=-20
Horz: 1-2=-11, 2-3=-8, 3-4=0, 4-5=4
28) Dead + 0.75 Snow (bal.) + 0.75(0.6 MWFRS Wind (Neg. Int) 1st Parallel): Lumber Increase=1.60, Plate Increase=1.60
Uniform Loads (plf)
Vert: 1-2=-17, 2-3=-21, 3-4=-31, 4-5=-27, 2-4=-20
Horz: 1-2=-20, 2-3=-17, 3-4=7, 4-5=10
29) Dead + 0.75 Snow (bal.) + 0.75(0.6 MWFRS Wind (Neg. Int) 2nd Parallel): Lumber Increase=1.60, Plate Increase=1.60
Uniform Loads (plf)
Vert: 1-2=-27, 2-3=-31, 3-4=-21, 4-5=-17, 2-4=-20
Horz: 1-2=-10, 2-3=-7, 3-4=17, 4-5=20
30) Dead + 0.75 Roof Live (bal.) + 0.75(0.6 MWFRS Wind (Neg. Int) Left): Lumber Increase=1.60, Plate Increase=1.60
Uniform Loads (plf)
Vert: 1-2=-46, 2-3=-50, 3-4=-42, 4-5=-39, 2-4=-20
Horz: 1-2=-4, 2-3=-0, 3-4=8, 4-5=11
31) Dead + 0.75 Roof Live (bal.) + 0.75(0.6 MWFRS Wind (Neg. Int) Right): Lumber Increase=1.60, Plate Increase=1.60
Uniform Loads (plf)
Vert: 1-2=-39, 2-3=-42, 3-4=-50, 4-5=-46, 2-4=-20
Horz: 1-2=-11, 2-3=-8, 3-4=0, 4-5=4
32) Dead + 0.75 Roof Live (bal.) + 0.75(0.6 MWFRS Wind (Neg. Int) 1st Parallel): Lumber Increase=1.60, Plate Increase=1.60
Uniform Loads (plf)
Vert: 1-2=-30, 2-3=-33, 3-4=-43, 4-5=-40, 2-4=-20
Horz: 1-2=-20, 2-3=-17, 3-4=7, 4-5=10
33) Dead + 0.75 Roof Live (bal.) + 0.75(0.6 MWFRS Wind (Neg. Int) 2nd Parallel): Lumber Increase=1.60, Plate Increase=1.60
Uniform Loads (plf)
Vert: 1-2=-40, 2-3=-43, 3-4=-33, 4-5=-30, 2-4=-20
Horz: 1-2=-10, 2-3=-7, 3-4=17, 4-5=20
34) Dead + 0.6 C-C Wind Min. Down: Lumber Increase=1.60, Plate Increase=1.60
Uniform Loads (plf)
Vert: 1-2=4, 2-3=-28, 3-5=-28, 2-4=-12
Horz: 1-2=-16, 2-3=16, 3-5=-16
35) Dead + 0.6 C-C Wind Min. Upward: Lumber Increase=1.60, Plate Increase=1.60
Uniform Loads (plf)
Vert: 1-3=4, 3-5=4, 2-4=-12
Horz: 1-3=-16, 3-5=16
36) 1st Dead + Roof Live (unbalanced): Lumber Increase=1.15, Plate Increase=1.15
Uniform Loads (plf)
Vert: 1-3=-60, 3-5=-20, 2-4=-20
37) 2nd Dead + Roof Live (unbalanced): Lumber Increase=1.15, Plate Increase=1.15
Uniform Loads (plf)
Vert: 1-3=-20, 3-5=-60, 2-4=-20
38) 3rd Dead + 0.75 Roof Live (unbalanced): Lumber Increase=1.15, Plate Increase=1.15
Uniform Loads (plf)
Vert: 1-3=-50, 3-5=-20, 2-4=-20
39) 4th Dead + 0.75 Roof Live (unbalanced): Lumber Increase=1.15, Plate Increase=1.15
Uniform Loads (plf)
Vert: 1-3=-20, 3-5=-50, 2-4=-20

WARNING - Verify design parameters and READ NOTES ON THIS AND INCLUDED MITEK REFERENCE PAGE MII-7473 rev. 5/19/2020 BEFORE USE.
Design valid for use only with MiTek® connectors. This design is based only upon parameters shown, and is for an individual building component, not a truss system. Before use, the building designer must verify the applicability of design parameters and properly incorporate this design into the overall building design. Bracing indicated is to prevent buckling of individual truss web and/or chord members only. Additional temporary and permanent bracing is always required for stability and to prevent collapse with possible personal injury and property damage. For general guidance regarding the fabrication, storage, delivery, erection and bracing of trusses and truss systems, see **ANSI/TPI1 Quality Criteria, DSB-89 and BCSI Building Component Safety Information** available from Truss Plate Institute, 2670 Crain Highway, Suite 203 Waldorf, MD 20601

ENGINEERING BY TRENCO A MiTek Affiliate
818 Soundside Road
Edenton, NC 27932

Job	Truss	Truss Type	Qty	Ply	KB Home 150.1910.A Vault
150_1910_A_VA	PBE	Piggyback	2	1	I49904349 Job Reference (optional)

84 Components (Dunn), Dunn, NC - 28334, 8.530 s Dec 6 2021 MiTek Industries, Inc. Wed Jan 26 11:29:04 2022 Page 1
ID:VMD62rz1yiHD_OqRtbnrlFztQ8K-qsLVeVfyAIWy2VTI9EAR0JwY3wKVN0FWuMC35EzrVGT

4-0-13 | 8-1-10
4-0-13 | 4-0-13

Scale = 1:15.5

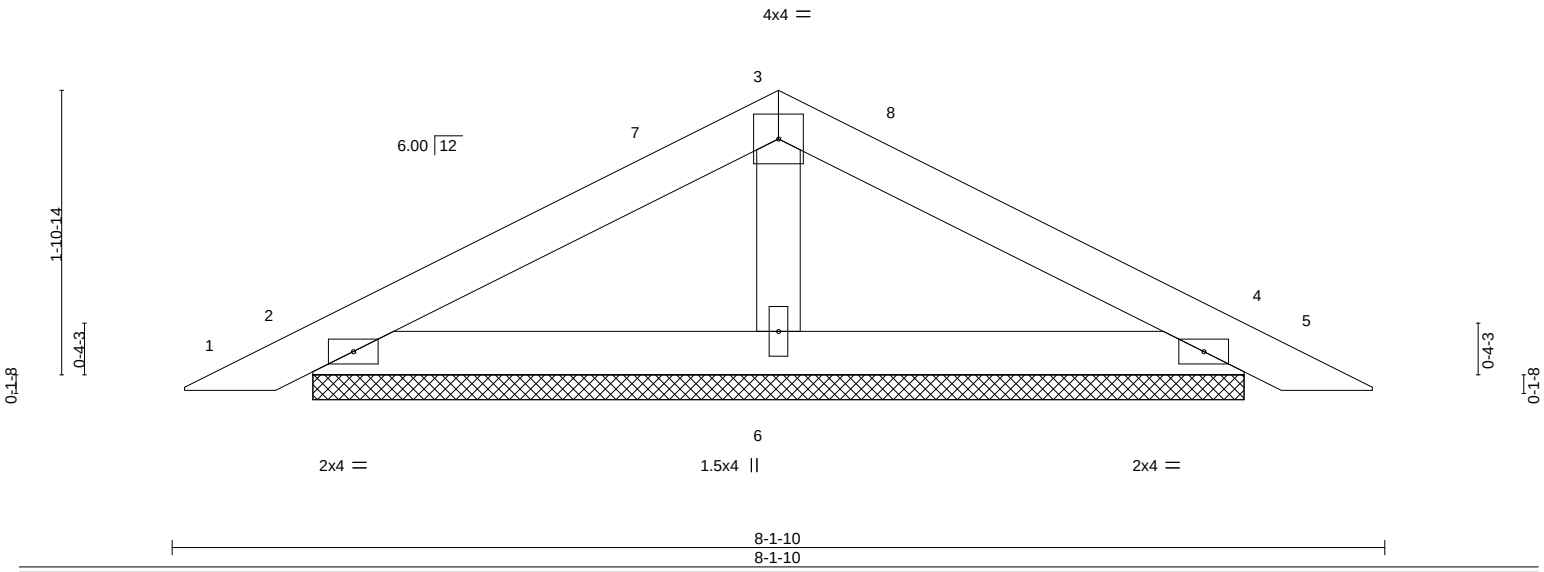

LOADING (psf)		SPACING-	2-0-0	CSI.		DEFL.	in	(loc)	l/defl	L/d	PLATES	GRIP
TCLL (roof)	20.0	Plate Grip DOL	1.15	TC	0.18	Vert(LL)	0.00	5	n/r	120	MT20	197/144
Snow (Pf/Pg)	11.6/15.0	Lumber DOL	1.15	BC	0.10	Vert(CT)	0.01	5	n/r	120		
TCDL	10.0	Rep Stress Incr	YES	WB	0.03	Horz(CT)	0.00	4	n/a	n/a		
BCLL	0.0 *	Code IRC2018/TPI2014		Matrix-P							Weight: 24 lb	FT = 20%
BCDL	10.0											

LUMBER-
TOP CHORD 2x4 SP No.2 or 2x4 SPF No.2
BOT CHORD 2x4 SP No.2 or 2x4 SPF No.2
OTHERS 2x4 SP No.3

BRACING-
TOP CHORD Structural wood sheathing directly applied or 6-0-0 oc purlins.
BOT CHORD Rigid ceiling directly applied or 10-0-0 oc bracing.

REACTIONS. (size) 2=6-2-15, 4=6-2-15, 6=6-2-15
Max Horz 2=25(LC 16)
Max Uplift 2=-27(LC 16), 4=-31(LC 17)
Max Grav 2=169(LC 23), 4=169(LC 24), 6=241(LC 2)

FORCES. (lb) - Max. Comp./Max. Ten. - All forces 250 (lb) or less except when shown.

NOTES-
1) Unbalanced roof live loads have been considered for this design.
2) Wind: ASCE 7-16; Vult=120mph (3-second gust) Vasd=95mph; TCDL=6.0psf; BCDL=6.0psf; h=25ft; Cat. II; Exp B; Enclosed; MWFRS (envelope) gable end zone and C-C Exterior(2E) 0-4-11 to 3-4-11, Interior(1) 3-4-11 to 4-0-13, Exterior(2R) 4-0-13 to 7-2-4, Interior(1) 7-2-4 to 7-8-15 zone;C-C for members and forces & MWFRS for reactions shown; Lumber DOL=1.60 plate grip DOL=1.60
3) TCLL: ASCE 7-16; Pr=20.0 psf (roof LL: Lum DOL=1.15 Plate DOL=1.15); Pg=15.0 psf; Pf=11.6 psf (Lum DOL=1.15 Plate DOL=1.15); Is=1.0; Rough Cat B; Partially Exp.; Ce=1.0; Cs=1.00; Ct=1.10
4) Unbalanced snow loads have been considered for this design.
5) This truss has been designed for greater of min roof live load of 12.0 psf or 1.00 times flat roof load of 11.6 psf on overhangs non-concurrent with other live loads.
6) Gable requires continuous bottom chord bearing.
7) This truss has been designed for a 10.0 psf bottom chord live load nonconcurrent with any other live loads.
8) * This truss has been designed for a live load of 20.0psf on the bottom chord in all areas where a rectangle 3-6-0 tall by 2-0-0 wide will fit between the bottom chord and any other members.
9) n/a

10) This truss is designed in accordance with the 2018 International Residential Code sections R502.11.1 and R802.10.2 and referenced standard ANSI/TPI 1.
11) See Standard Industry Piggyback Truss Connection Detail for Connection to base truss as applicable, or consult qualified building designer.

January 27,2022

WARNING - Verify design parameters and READ NOTES ON THIS AND INCLUDED MITEK REFERENCE PAGE MII-7473 rev. 5/19/2020 BEFORE USE.
Design valid for use only with MiTek® connectors. This design is based only upon parameters shown, and is for an individual building component, not a truss system. Before use, the building designer must verify the applicability of design parameters and properly incorporate this design into the overall building design. Bracing indicated is to prevent buckling of individual truss web and/or chord members only. Additional temporary and permanent bracing is always required for stability and to prevent collapse with possible personal injury and property damage. For general guidance regarding the fabrication, storage, delivery, erection and bracing of trusses and truss systems, see **ANSI/TPI1 Quality Criteria, DSB-89 and BCSI Building Component Safety Information** available from Truss Plate Institute, 2670 Crain Highway, Suite 203 Waldorf, MD 20601

ENGINEERING BY TRENCO A MiTek Affiliate
818 Soundside Road
Edenton, NC 27932

Job	Truss	Truss Type	Qty	Ply	KB Home 150.1910.A Vault
150_1910_A_VA	V1	Valley	1	1	I49904350 Job Reference (optional)

84 Components (Dunn), Dunn, NC - 28334, 8.530 s Dec 6 2021 MiTek Industries, Inc. Wed Jan 26 11:29:05 2022 Page 1
ID:VMD62rz1yiHD_OqRtbnrlFztQ8K-I2vtsrgbxcepgf2VjyhgZWTZYKdR6Scf70ycdgzrVGS

6-0-6 | 12-0-12
6-0-6 | 6-0-6

Scale = 1:25.8

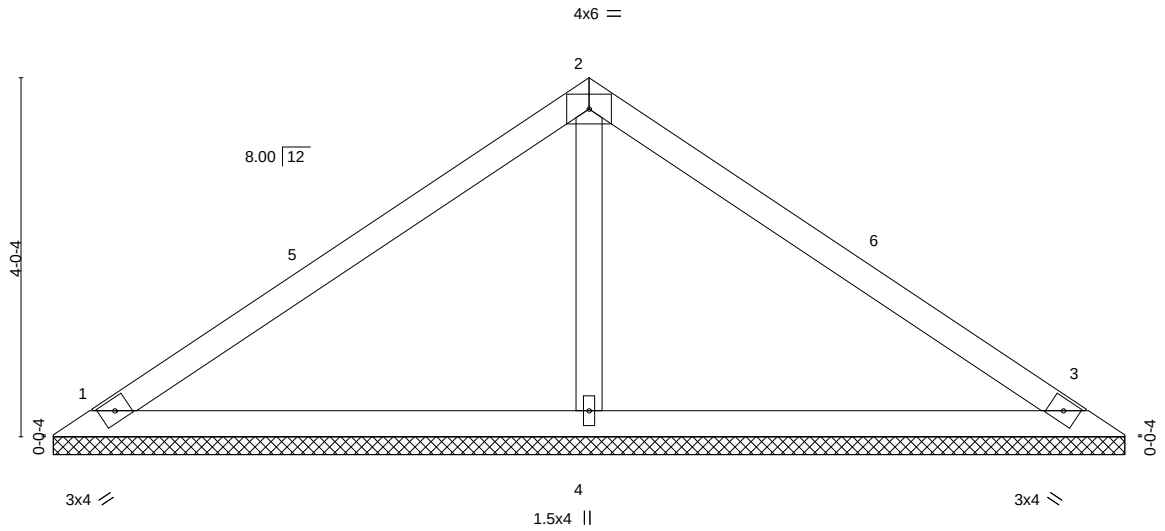

0-0-6 | 12-0-12
0-0-6 | 12-0-6

LOADING (psf)		SPACING-	2-0-0	CSI.		DEFL.	in	(loc)	l/defl	L/d	PLATES	GRIP
TCLL (roof)	20.0	Plate Grip DOL	1.15	TC	0.77	Vert(LL)	n/a	-	n/a	999	MT20	197/144
Snow (Pf/Pg)	11.6/15.0	Lumber DOL	1.15	BC	0.31	Vert(CT)	n/a	-	n/a	999		
TCDL	10.0	Rep Stress Incr	YES	WB	0.09	Horz(CT)	0.00	3	n/a	n/a		
BCLL	0.0 *	Code IRC2018/TPI2014		Matrix-S							Weight: 43 lb	FT = 20%
BCDL	10.0											

LUMBER-
TOP CHORD 2x4 SP No.3
BOT CHORD 2x4 SP No.2 or 2x4 SPF No.2
OTHERS 2x4 SP No.3

BRACING-
TOP CHORD Structural wood sheathing directly applied or 6-0-0 oc purlins.
BOT CHORD Rigid ceiling directly applied or 10-0-0 oc bracing.

REACTIONS. (size) 1=12-0-0, 3=12-0-0, 4=12-0-0
Max Horz 1=74(LC 11)
Max Uplift 1=-21(LC 14), 3=-30(LC 15)
Max Grav 1=217(LC 2), 3=217(LC 2), 4=454(LC 2)

FORCES. (lb) - Max. Comp./Max. Ten. - All forces 250 (lb) or less except when shown.
WEBS 2-4=-289/80

NOTES-
1) Unbalanced roof live loads have been considered for this design.
2) Wind: ASCE 7-16; Vult=120mph (3-second gust) Vasd=95mph; TCDL=6.0psf; BCDL=6.0psf; h=25ft; Cat. II; Exp B; Enclosed; MWFRS (envelope) gable end zone and C-C Exterior(2E) 0-5-12 to 3-5-12, Interior(1) 3-5-12 to 6-0-6, Exterior(2R) 6-0-6 to 9-0-6, Interior(1) 9-0-6 to 11-7-0 zone;C-C for members and forces & MWFRS for reactions shown; Lumber DOL=1.60 plate grip DOL=1.60
3) TCLL: ASCE 7-16; Pr=20.0 psf (roof LL: Lum DOL=1.15 Plate DOL=1.15); Pg=15.0 psf; Pf=11.6 psf (Lum DOL=1.15 Plate DOL=1.15); Is=1.0; Rough Cat B; Partially Exp.; Ce=1.0; Cs=1.00; Ct=1.10
4) Gable requires continuous bottom chord bearing.
5) This truss has been designed for a 10.0 psf bottom chord live load nonconcurrent with any other live loads.
6) * This truss has been designed for a live load of 20.0psf on the bottom chord in all areas where a rectangle 3-6-0 tall by 2-0-0 wide will fit between the bottom chord and any other members.
7) n/a

8) This truss is designed in accordance with the 2018 International Residential Code sections R502.11.1 and R802.10.2 and referenced standard ANSI/TPI 1.

January 27,2022

WARNING - Verify design parameters and READ NOTES ON THIS AND INCLUDED MITEK REFERENCE PAGE MII-7473 rev. 5/19/2020 BEFORE USE.
Design valid for use only with MiTek® connectors. This design is based only upon parameters shown, and is for an individual building component, not a truss system. Before use, the building designer must verify the applicability of design parameters and properly incorporate this design into the overall building design. Bracing indicated is to prevent buckling of individual truss web and/or chord members only. Additional temporary and permanent bracing is always required for stability and to prevent collapse with possible personal injury and property damage. For general guidance regarding the fabrication, storage, delivery, erection and bracing of trusses and truss systems, see **ANSI/TPI1 Quality Criteria, DSB-89 and BCSI Building Component Safety Information** available from Truss Plate Institute, 2670 Crain Highway, Suite 203 Waldorf, MD 20601

ENGINEERING BY TRENCO A MiTek Affiliate
818 Soundside Road
Edenton, NC 27932

Job	Truss	Truss Type	Qty	Ply	KB Home 150.1910.A Vault
150_1910_A_VA	V2	Valley	1	1	I49904351 Job Reference (optional)

84 Components (Dunn), Dunn, NC - 28334, 8.530 s Dec 6 2021 MiTek Industries, Inc. Wed Jan 26 11:29:06 2022 Page 1
ID:VMD62rz1yiHD_OqRtbnrlFztQ8K-mETG3BhDivmgIpdhHfDv5k?oxkz7rwXpLghA97zrVGR

Scale = 1:21.1

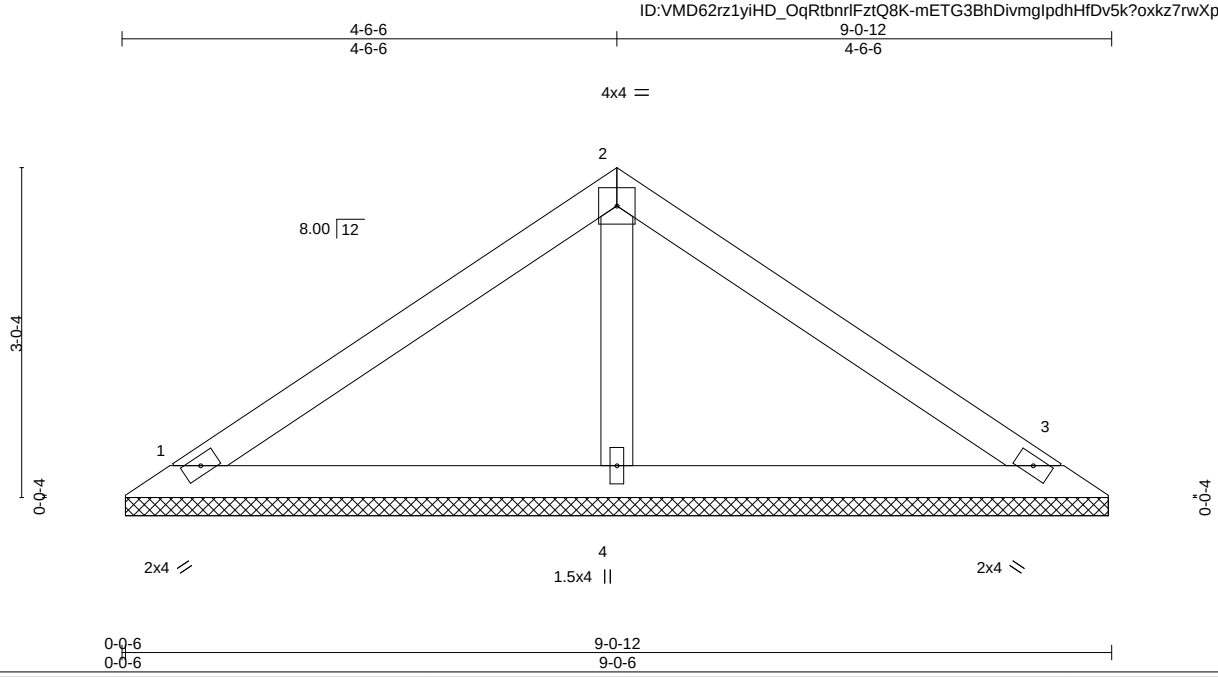

LOADING (psf)		SPACING- 2-0-0	CSI.		DEFL.	in	(loc)	l/defl	L/d	PLATES	GRIP
TCLL (roof)	20.0	Plate Grip DOL 1.15	TC	0.54	Vert(LL)	n/a	-	n/a	999	MT20	244/190
Snow (Pf/Pg)	11.6/15.0	Lumber DOL 1.15	BC	0.28	Vert(CT)	n/a	-	n/a	999		
TCDL	10.0	Rep Stress Incr YES	WB	0.05	Horz(CT)	0.00	3	n/a	n/a		
BCLL	0.0 *	Code IRC2018/TPI2014	Matrix-S							Weight: 31 lb	FT = 20%
BCDL	10.0										

LUMBER-
TOP CHORD 2x4 SP No.3
BOT CHORD 2x4 SP No.3
OTHERS 2x4 SP No.3

BRACING-
TOP CHORD Structural wood sheathing directly applied or 6-0-0 oc purlins.
BOT CHORD Rigid ceiling directly applied or 10-0-0 oc bracing.

REACTIONS. (size) 1=9-0-0, 3=9-0-0, 4=9-0-0
Max Horz 1=-54(LC 10)
Max Uplift 1=-22(LC 14), 3=-29(LC 15)
Max Grav 1=173(LC 2), 3=173(LC 2), 4=301(LC 2)

FORCES. (lb) - Max. Comp./Max. Ten. - All forces 250 (lb) or less except when shown.

NOTES-
1) Unbalanced roof live loads have been considered for this design.
2) Wind: ASCE 7-16; Vult=120mph (3-second gust) Vasd=95mph; TCDL=6.0psf; BCDL=6.0psf; h=25ft; Cat. II; Exp B; Enclosed; MWFRS (envelope) gable end zone and C-C Exterior(2E) 0-5-12 to 3-5-12, Interior(1) 3-5-12 to 4-6-6, Exterior(2R) 4-6-6 to 7-6-6, Interior(1) 7-6-6 to 8-7-0 zone;C-C for members and forces & MWFRS for reactions shown; Lumber DOL=1.60 plate grip DOL=1.60
3) TCLL: ASCE 7-16; Pr=20.0 psf (roof LL: Lum DOL=1.15 Plate DOL=1.15); Pg=15.0 psf; Pf=11.6 psf (Lum DOL=1.15 Plate DOL=1.15); Is=1.0; Rough Cat B; Partially Exp.; Ce=1.0; Cs=1.00; Ct=1.10
4) Gable requires continuous bottom chord bearing.
5) This truss has been designed for a 10.0 psf bottom chord live load nonconcurrent with any other live loads.
6) * This truss has been designed for a live load of 20.0psf on the bottom chord in all areas where a rectangle 3-6-0 tall by 2-0-0 wide will fit between the bottom chord and any other members.
7) n/a

8) This truss is designed in accordance with the 2018 International Residential Code sections R502.11.1 and R802.10.2 and referenced standard ANSI/TPI 1.

January 27,2022

WARNING - Verify design parameters and READ NOTES ON THIS AND INCLUDED MITEK REFERENCE PAGE MII-7473 rev. 5/19/2020 BEFORE USE.
Design valid for use only with MiTek® connectors. This design is based only upon parameters shown, and is for an individual building component, not a truss system. Before use, the building designer must verify the applicability of design parameters and properly incorporate this design into the overall building design. Bracing indicated is to prevent buckling of individual truss web and/or chord members only. Additional temporary and permanent bracing is always required for stability and to prevent collapse with possible personal injury and property damage. For general guidance regarding the fabrication, storage, delivery, erection and bracing of trusses and truss systems, see **ANSI/TPI1 Quality Criteria, DSB-89 and BCSI Building Component Safety Information** available from Truss Plate Institute, 2670 Crain Highway, Suite 203 Waldorf, MD 20601

ENGINEERING BY TRENCO A MiTek Affiliate
818 Soundside Road
Edenton, NC 27932

Job	Truss	Truss Type	Qty	Ply	KB Home 150.1910.A Vault
150_1910_A_VA	V3	Valley	1	1	I49904352 Job Reference (optional)

84 Components (Dunn), Dunn, NC - 28334, 8.530 s Dec 6 2021 MiTek Industries, Inc. Wed Jan 26 11:29:07 2022 Page 1
ID:VMD62rz1yiHD_OqRtbnrlFztQ8K-ER1eGXirSDuXvzCtrNk8exY2?8M?aM6yaKRjiZzrVGQ

3-0-6 6-0-12
3-0-6 3-0-6

Scale = 1:15.6

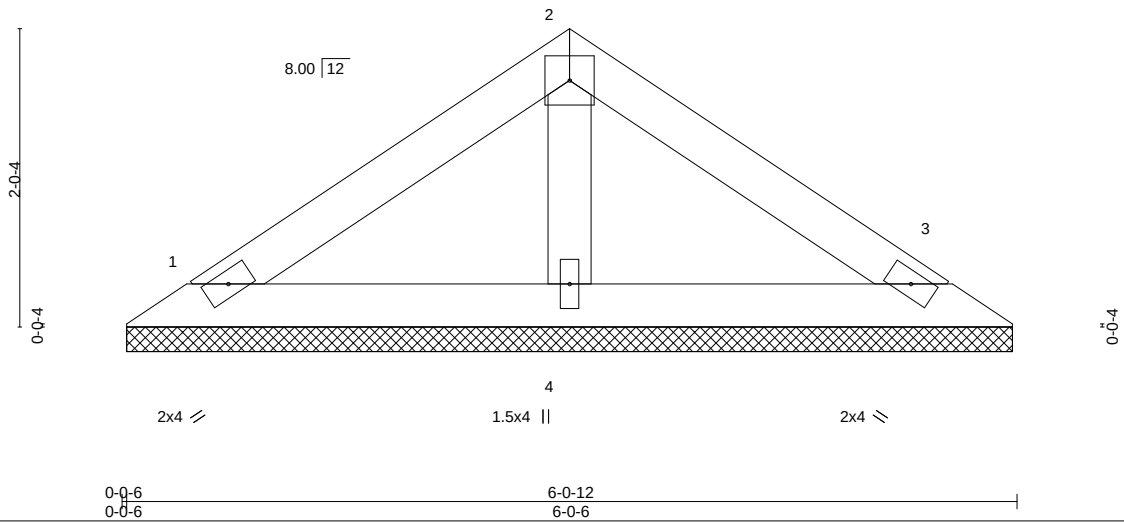

0-0-6 6-0-12
0-0-6 6-0-6

LOADING (psf)		SPACING-	2-0-0	CSI.		DEFL.	in	(loc)	l/defl	L/d	PLATES	GRIP
TCLL (roof)	20.0	Plate Grip DOL	1.15	TC	0.20	Vert(LL)	n/a	-	n/a	999	MT20	244/190
Snow (Pf/Pg)	11.6/15.0	Lumber DOL	1.15	BC	0.11	Vert(CT)	n/a	-	n/a	999		
TCDL	10.0	Rep Stress Incr	YES	WB	0.03	Horz(CT)	0.00	3	n/a	n/a		
BCLL	0.0 *	Code IRC2018/TPI2014		Matrix-P							Weight: 20 lb	FT = 20%
BCDL	10.0											

LUMBER-
TOP CHORD 2x4 SP No.3
BOT CHORD 2x4 SP No.3
OTHERS 2x4 SP No.3

BRACING-
TOP CHORD Structural wood sheathing directly applied or 6-0-0 oc purlins.
BOT CHORD Rigid ceiling directly applied or 10-0-0 oc bracing.

REACTIONS. (size) 1=6-0-0, 3=6-0-0, 4=6-0-0
Max Horz 1=-34(LC 10)
Max Uplift 1=-14(LC 14), 3=-19(LC 15)
Max Grav 1=109(LC 2), 3=109(LC 2), 4=189(LC 2)

FORCES. (lb) - Max. Comp./Max. Ten. - All forces 250 (lb) or less except when shown.

NOTES-
1) Unbalanced roof live loads have been considered for this design.
2) Wind: ASCE 7-16; Vult=120mph (3-second gust) Vasd=95mph; TCDL=6.0psf; BCDL=6.0psf; h=25ft; Cat. II; Exp B; Enclosed; MWFRS (envelope) gable end zone and C-C Exterior(2E) zone;C-C for members and forces & MWFRS for reactions shown; Lumber DOL=1.60 plate grip DOL=1.60
3) TCLL: ASCE 7-16; Pr=20.0 psf (roof LL: Lum DOL=1.15 Plate DOL=1.15); Pg=15.0 psf; Pf=11.6 psf (Lum DOL=1.15 Plate DOL=1.15); Is=1.0; Rough Cat B; Partially Exp.; Ce=1.0; Cs=1.00; Ct=1.10
4) Gable requires continuous bottom chord bearing.
5) This truss has been designed for a 10.0 psf bottom chord live load nonconcurrent with any other live loads.
6) * This truss has been designed for a live load of 20.0psf on the bottom chord in all areas where a rectangle 3-6-0 tall by 2-0-0 wide will fit between the bottom chord and any other members.
7) n/a

8) This truss is designed in accordance with the 2018 International Residential Code sections R502.11.1 and R802.10.2 and referenced standard ANSI/TPI 1.

January 27,2022

WARNING - Verify design parameters and READ NOTES ON THIS AND INCLUDED MITEK REFERENCE PAGE MII-7473 rev. 5/19/2020 BEFORE USE.
Design valid for use only with MiTek® connectors. This design is based only upon parameters shown, and is for an individual building component, not a truss system. Before use, the building designer must verify the applicability of design parameters and properly incorporate this design into the overall building design. Bracing indicated is to prevent buckling of individual truss web and/or chord members only. Additional temporary and permanent bracing is always required for stability and to prevent collapse with possible personal injury and property damage. For general guidance regarding the fabrication, storage, delivery, erection and bracing of trusses and truss systems, see **ANSI/TPI1 Quality Criteria, DSB-89 and BCSI Building Component Safety Information** available from Truss Plate Institute, 2670 Crain Highway, Suite 203 Waldorf, MD 20601

ENGINEERING BY TRENCO A MiTek Affiliate
818 Soundside Road
Edenton, NC 27932

Job	Truss	Truss Type	Qty	Ply	KB Home 150.1910.A Vault
150_1910_A_VA	V4	Valley	1	1	I49904353 Job Reference (optional)

84 Components (Dunn), Dunn, NC - 28334, 8.530 s Dec 6 2021 MiTek Industries, Inc. Wed Jan 26 11:29:08 2022 Page 1
ID:VMD62rz1yiHD_OqRtbnrIFztQ8K-jda0UsiTDX0OX7n4O4FNA94GMYheJpl6p_AGE?zrVGP

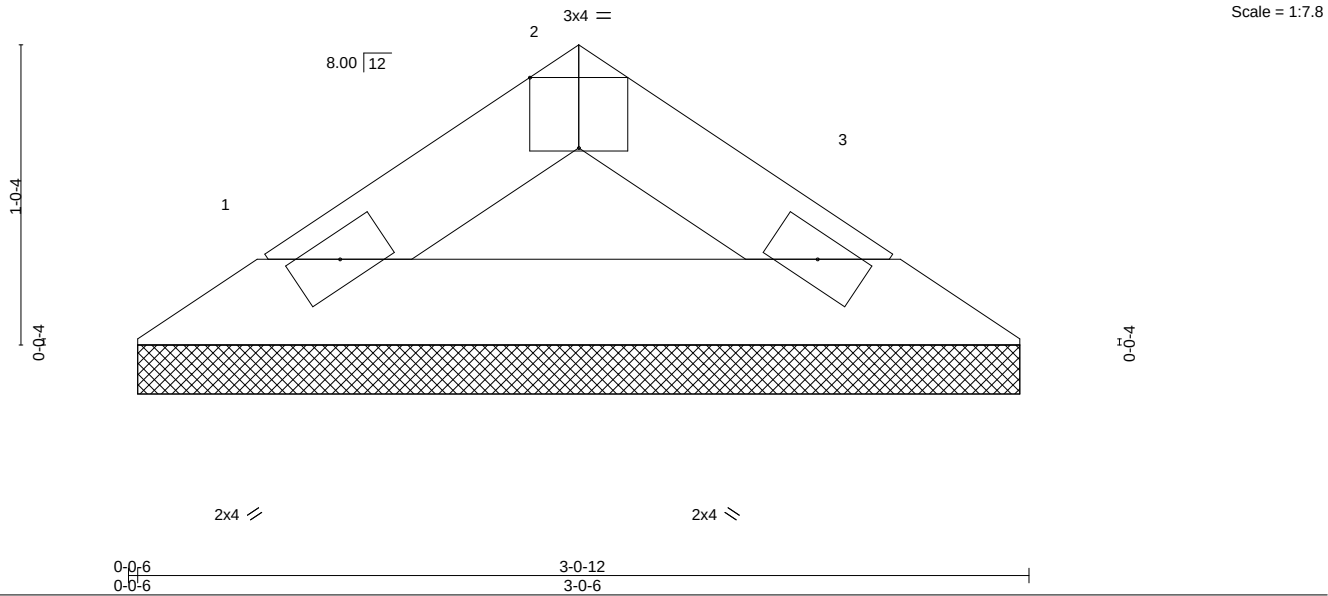

Plate Offsets (X,Y)-- [2:0-2-0,Edge]

LOADING (psf)		SPACING-	2-0-0	CSI.		DEFL.	in	(loc)	l/defl	L/d	PLATES	GRIP
TCLL (roof)	20.0	Plate Grip DOL	1.15	TC	0.03	Vert(LL)	n/a	-	n/a	999	MT20	244/190
Snow (Pf/Pg)	11.6/15.0	Lumber DOL	1.15	BC	0.09	Vert(CT)	n/a	-	n/a	999		
TCDL	10.0	Rep Stress Incr	YES	WB	0.00	Horz(CT)	0.00	3	n/a	n/a		
BCLL	0.0 *	Code IRC2018/TPI2014		Matrix-P							Weight: 8 lb	FT = 20%
BCDL	10.0											

LUMBER-
TOP CHORD 2x4 SP No.3
BOT CHORD 2x4 SP No.3

BRACING-
TOP CHORD Structural wood sheathing directly applied or 3-0-12 oc purlins.
BOT CHORD Rigid ceiling directly applied or 10-0-0 oc bracing.

REACTIONS. (size) 1=3-0-0, 3=3-0-0
Max Horz 1=-14(LC 12)
Max Uplift 1=-2(LC 14), 3=-2(LC 15)
Max Grav 1=84(LC 2), 3=84(LC 2)

FORCES. (lb) - Max. Comp./Max. Ten. - All forces 250 (lb) or less except when shown.

NOTES-
1) Unbalanced roof live loads have been considered for this design.
2) Wind: ASCE 7-16; Vult=120mph (3-second gust) Vasd=95mph; TCDL=6.0psf; BCDL=6.0psf; h=25ft; Cat. II; Exp B; Enclosed; MWFRS (envelope) gable end zone and C-C Exterior(2E) zone;C-C for members and forces & MWFRS for reactions shown; Lumber DOL=1.60 plate grip DOL=1.60
3) TCLL: ASCE 7-16; Pr=20.0 psf (roof LL: Lum DOL=1.15 Plate DOL=1.15); Pg=15.0 psf; Pf=11.6 psf (Lum DOL=1.15 Plate DOL=1.15); Is=1.0; Rough Cat B; Partially Exp.; Ce=1.0; Cs=1.00; Ct=1.10
4) Gable requires continuous bottom chord bearing.
5) This truss has been designed for a 10.0 psf bottom chord live load nonconcurrent with any other live loads.
6) * This truss has been designed for a live load of 20.0psf on the bottom chord in all areas where a rectangle 3-6-0 tall by 2-0-0 wide will fit between the bottom chord and any other members.
7) n/a

8) This truss is designed in accordance with the 2018 International Residential Code sections R502.11.1 and R802.10.2 and referenced standard ANSI/TPI 1.

January 27,2022

WARNING - Verify design parameters and READ NOTES ON THIS AND INCLUDED MITEK REFERENCE PAGE MII-7473 rev. 5/19/2020 BEFORE USE.
Design valid for use only with MiTek® connectors. This design is based only upon parameters shown, and is for an individual building component, not a truss system. Before use, the building designer must verify the applicability of design parameters and properly incorporate this design into the overall building design. Bracing indicated is to prevent buckling of individual truss web and/or chord members only. Additional temporary and permanent bracing is always required for stability and to prevent collapse with possible personal injury and property damage. For general guidance regarding the fabrication, storage, delivery, erection and bracing of trusses and truss systems, see **ANSI/TPI1 Quality Criteria, DSB-89 and BCSI Building Component Safety Information** available from Truss Plate Institute, 2670 Crain Highway, Suite 203 Waldorf, MD 20601

ENGINEERING BY TRENCO A MiTek Affiliate
818 Soundside Road
Edenton, NC 27932

Symbols

PLATE LOCATION AND ORIENTATION

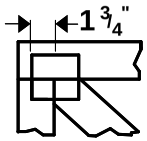

Center plate on joint unless x, y offsets are indicated. Dimensions are in ft-in-sixteenths. Apply plates to both sides of truss and fully embed teeth.

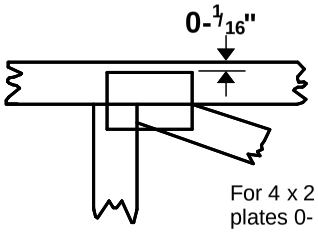

For 4 x 2 orientation, locate plates 0- 1/16" from outside edge of truss.

This symbol indicates the required direction of slots in connector plates.

*** Plate location details available in MiTek 20/20 software or upon request.**

PLATE SIZE

4 x 4

The first dimension is the plate width measured perpendicular to slots. Second dimension is the length parallel to slots.

LATERAL BRACING LOCATION

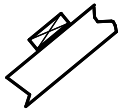

Indicated by symbol shown and/or by text in the bracing section of the output. Use T or I bracing if indicated.

BEARING

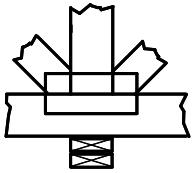

Indicates location where bearings (supports) occur. Icons vary but reaction section indicates joint number where bearings occur. Min size shown is for crushing only.

Industry Standards:

ANSI/TPI1: National Design Specification for Metal Plate Connected Wood Truss Construction.
DSB-89: Design Standard for Bracing.
BCSI: Building Component Safety Information, Guide to Good Practice for Handling, Installing & Bracing of Metal Plate Connected Wood Trusses.

Numbering System

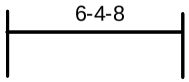

dimensions shown in ft-in-sixteenths
(Drawings not to scale)

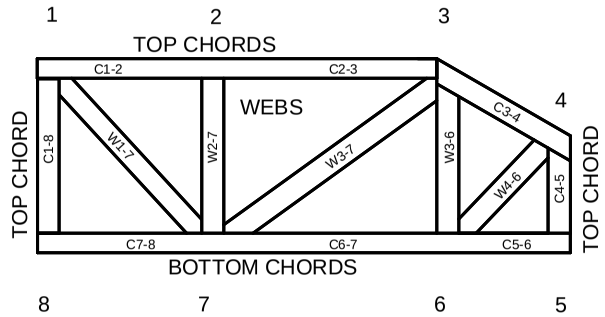

JOINTS ARE GENERALLY NUMBERED/LETTERED CLOCKWISE AROUND THE TRUSS STARTING AT THE JOINT FARTHEST TO THE LEFT.

CHORDS AND WEBS ARE IDENTIFIED BY END JOINT NUMBERS/LETTERS.

PRODUCT CODE APPROVALS

ICC-ES Reports:

ESR-1311, ESR-1352, ESR1988
ER-3907, ESR-2362, ESR-1397, ESR-3282

Trusses are designed for wind loads in the plane of the truss unless otherwise shown.

Lumber design values are in accordance with ANSI/TPI 1 section 6.3 These truss designs rely on lumber values established by others.

© 2012 MiTek® All Rights Reserved

MiTek

ENGINEERING BY TRENCO
A MiTek Affiliate

General Safety Notes

Failure to Follow Could Cause Property Damage or Personal Injury

1. Additional stability bracing for truss system, e.g. diagonal or X-bracing, is always required. See BCSI.
2. Truss bracing must be designed by an engineer. For wide truss spacing, individual lateral braces themselves may require bracing, or alternative Tor I bracing should be considered.
3. Never exceed the design loading shown and never stack materials on inadequately braced trusses.
4. Provide copies of this truss design to the building designer, erection supervisor, property owner and all other interested parties.
5. Cut members to bear tightly against each other.
6. Place plates on each face of truss at each joint and embed fully. Knots and wane at joint locations are regulated by ANSI/TPI 1.
7. Design assumes trusses will be suitably protected from the environment in accord with ANSI/TPI 1.
8. Unless otherwise noted, moisture content of lumber shall not exceed 19% at time of fabrication.
9. Unless expressly noted, this design is not applicable for use with fire retardant, preservative treated, or green lumber.
10. Camber is a non-structural consideration and is the responsibility of truss fabricator. General practice is to camber for dead load deflection.
11. Plate type, size, orientation and location dimensions indicated are minimum plating requirements.
12. Lumber used shall be of the species and size, and in all respects, equal to or better than that specified.
13. Top chords must be sheathed or purlins provided at spacing indicated on design.
14. Bottom chords require lateral bracing at 10 ft. spacing, or less, if no ceiling is installed, unless otherwise noted.
15. Connections not shown are the responsibility of others.
16. Do not cut or alter truss member or plate without prior approval of an engineer.
17. Install and load vertically unless indicated otherwise.
18. Use of green or treated lumber may pose unacceptable environmental, health or performance risks. Consult with project engineer before use.
19. Review all portions of this design (front, back, words and pictures) before use. Reviewing pictures alone is not sufficient.
20. Design assumes manufacture in accordance with ANSI/TPI 1 Quality Criteria.
21. The design does not take into account any dynamic or other loads other than those expressly stated.