Department of Environment, Health and Natural Resources
Division of Environmental Health
On-Site Wastewater Section

Sheet:
Property ID:
Lot #:
File #: SFD 2204-0007
Code:

COLLEGE ACRES
LOT 15

SOIL/SITE EVALUATION
for ON-SITE WASTEWATER SYSTEM

Owner: TOBER Applicant: JEFF ROPE
Address: POVAL LN. Date Evaluated: 04/13/2022
Proposed Facility: Design Flow (.1949): Property Size:
Location of Site: 302 SFD Property Recorded: 3606 SFD
Water Supply: ☒ Public ☐ Individual ☐ Well ☐ Spring ☐ Other
Evaluation Method: ☒ Auger Boring ☐ Pit ☐ Cut
Type of Wastewater: ☒ Sewage ☐ Industrial Process ☐ Mixed

PROFILE #	.1940 Landscape Position/ Slope %	Horizon Depth (In.)	SOIL MORPHOLOGY .1941		OTHER PROFILE FACTORS				Profile Class & LTAR
			.1941 Structure/ Texture	.1941 Consistence Mineralogy	.1942 Soil Wetness/ Color	.1943 Soil Depth (IN.)	.1956 Sapro Class	.1944 Restr Horiz	
1,2,3	L 4%	0-14	GR LS	VFR NSNP					PS
		14-34	BR SCL	FR SP	7.5YR 7/1 @ 32"	34			0.375
4	L 3-4%	0-14	GR LS	VFR NSNP					PS
		14-36	BR SCL	FR SP		36			0.375

Description	Initial System	Repair System
Available Space (.1945)	✓	✓
System Type(s)	25% RED	25% RED
Site LTAR	0.375	0.375

Other Factors (.1946):
Site Classification (.1948): PROVISIONALLY SUITABLE
Evaluated By: ANTHONY CORRIN, NEHS
Others Present:

FILE #

COMMENTS: _____

LANDSCAPE POSITIONS	GROUP	TEXTURES	.1955 LTAR	CONSISTENCE MOIST	WET
R-RIDGE	I	S-SAND	1.2 - 0.8		
S-SHOULDER SLOPE		LS-LOAMY SAND		VFR-VERY FRIABLE	NS-NON-STICKY
L-LINEAR SLOPE				FR-FRIABLE	SS-SLIGHTY STICKY
FS-FOOT SLOPE	II	SL-SANDY LOAM	0.8 - 0.6	FI-FIRM	S-STICKY
N-NOSE SLOPE		L-LOAM		VFI-VERY FIRM	VS-VERY STICKY
H-HEAD SLOPE				EFI-EXTREMELY FIRM	NP-NON-PLASTIC
CC-CONCLAVE SLOPE	III	SI-SILT	0.6 - 0.3		SP-SLIGHTLY STICKY
CV-CONVEX SLOPE		SIL-SILT LOAM			P-PLASTIC
T-TERRACE		CL-CLAY LOAM			VP-VERY PLASTIC
FP-FLOOD PLAN		SCL-SANDY CLAY LOAM			
	IV	SIC-SILTY CLAY	0.4 - 0.1		
		C-CLAY			
		SC-SANDY CLAY			

STRUCTURE	MINERALOGY
SG-SINGLE GRAIN	SLIGHTLY EXPANSIVE
M- MASSIVE	
CR-CRUMB	EXPANSIVE
GR-GRANULAR	
SBK-SUBANGULAR BLOCKY	
ABK-ANGULAR BLOCKY	
PL-PLATY	
PR-PRISMATIC	
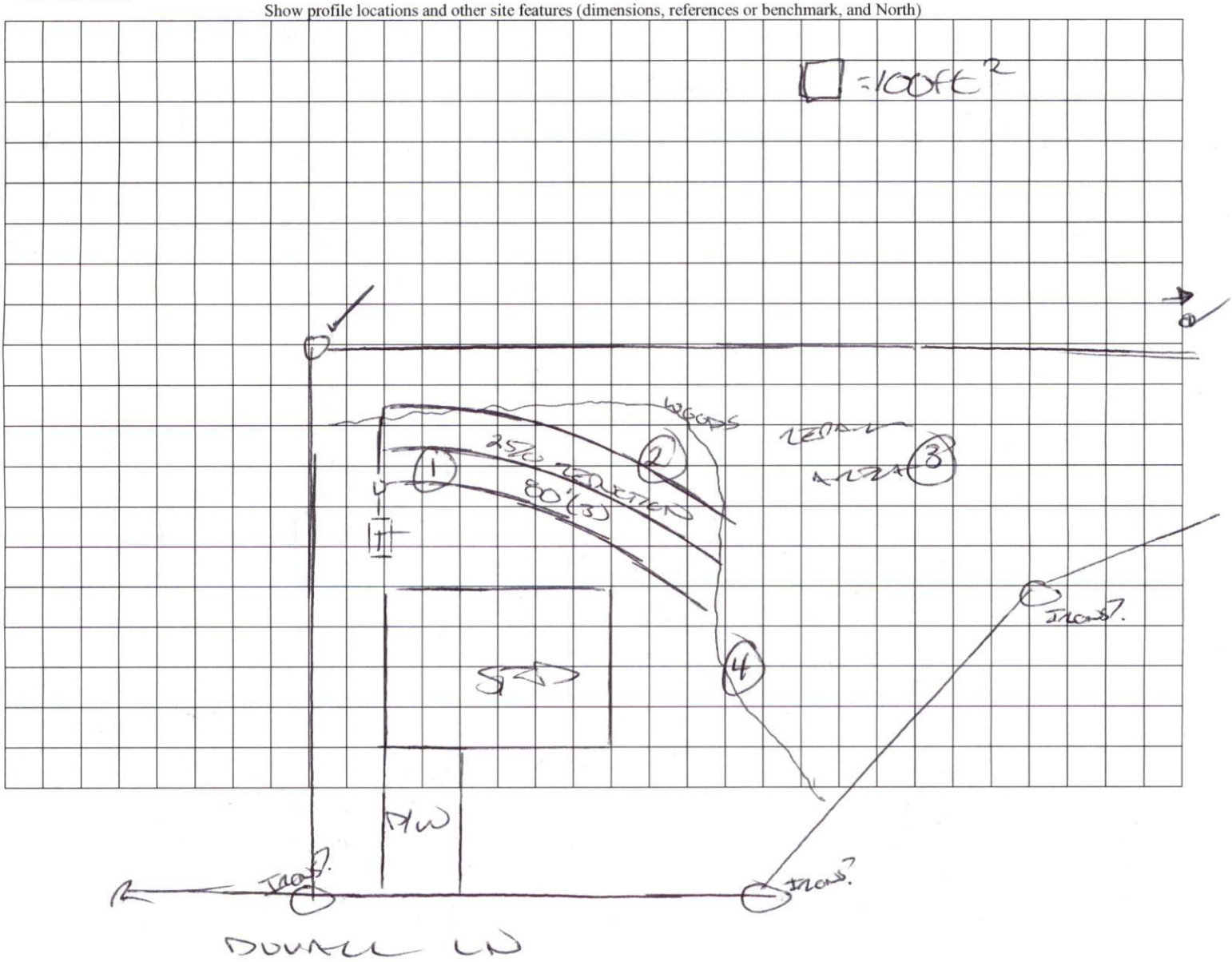
Show profile locations and other site features (dimensions, references or benchmark, and North)