ENGINEERING BY TRENCO
A MiTek Affiliate

Trenco
818 Soundside Rd
Edenton, NC 27932

Re: 237_2723_B
KB Home 237.2723.B

The truss drawing(s) referenced below have been prepared by Truss Engineering Co. under my direct supervision based on the parameters provided by 84 Components - #2383.

Pages or sheets covered by this seal: I45358813 thru I45358828

My license renewal date for the state of North Carolina is December 31, 2021.

North Carolina COA: C-0844

NORTH CAROLINA PROFESSIONAL SEAL 28228 ENGINEER XUEGANG LIU

March 26,2021

Liu, Xuegang

IMPORTANT NOTE: The seal on these truss component designs is a certification that the engineer named is licensed in the jurisdiction(s) identified and that the designs comply with ANSI/TPI 1. These designs are based upon parameters shown (e.g., loads, supports, dimensions, shapes and design codes), which were given to MiTek or TRENCO. Any project specific information included is for MiTek's or TRENCO's customers file reference purpose only, and was not taken into account in the preparation of these designs. MiTek or TRENCO has not independently verified the applicability of the design parameters or the designs for any particular building. Before use, the building designer should verify applicability of design parameters and properly incorporate these designs into the overall building design per ANSI/TPI 1, Chapter 2.

Job	Truss	Truss Type	Qty	Ply	KB Home 237.2723.B
237_2723_B	A1	Common	1	1	I45358813 Job Reference (optional)

84 Components (Dunn), Dunn, NC - 28334, 8.430 s Mar 4 2021 MiTek Industries, Inc. Thu Mar 25 10:44:12 2021 Page 1
ID:ytBjKryWUodVVgHGUH7JdBzXTGY-anGVVgx6KfeML4zl?zmGqGL6ireNmDo9fivqfYzXQ4n

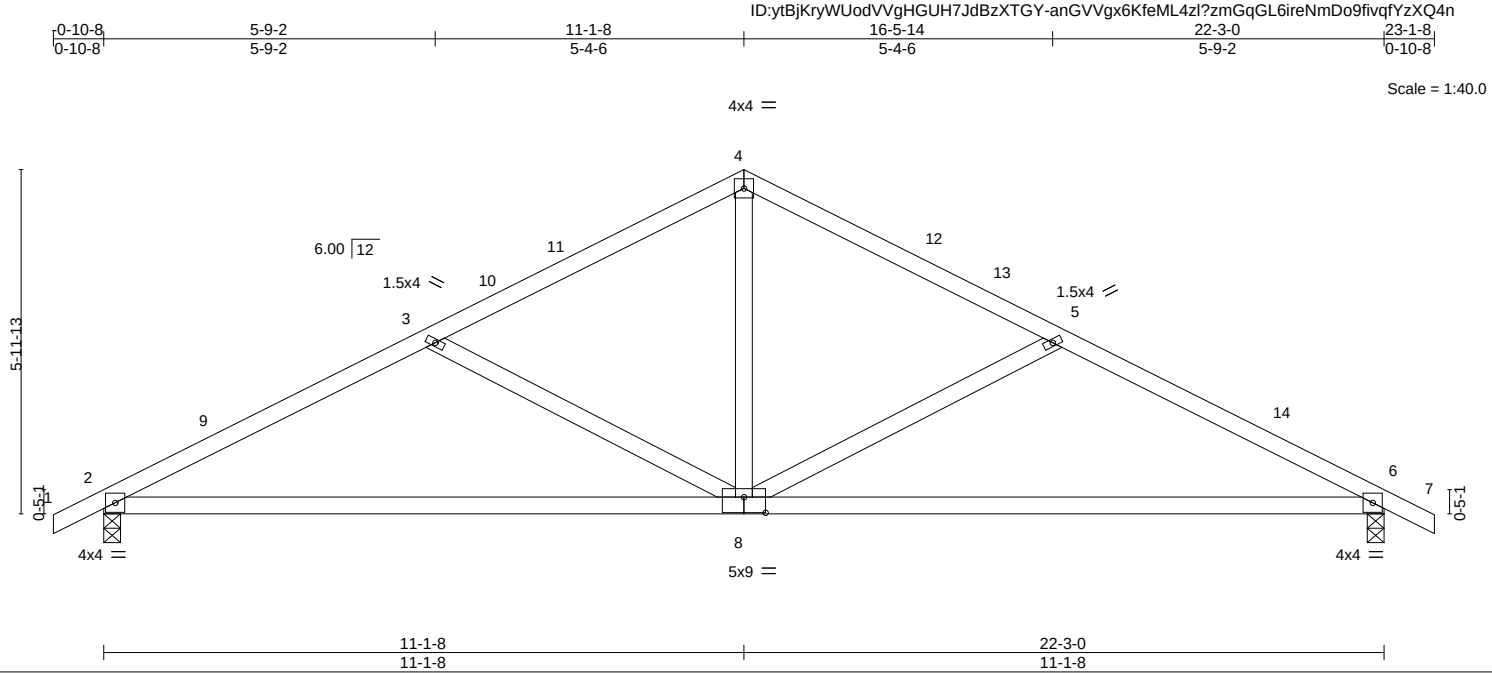

Plate Offsets (X,Y)-- [8:0-4-8,0-3-4]

LOADING (psf)		SPACING-	2-0-0	CSI.		DEFL.	in	(loc)	l/defl	L/d	PLATES	GRIP
TCLL (roof)	20.0	Plate Grip DOL	1.15	TC	0.44	Vert(LL)	-0.27	6-8	>976	240	MT20	197/144
Snow (Pf/Pg)	11.6/15.0	Lumber DOL	1.15	BC	0.94	Vert(CT)	-0.56	6-8	>467	180		
TCDL	10.0	Rep Stress Incr	YES	WB	0.30	Horz(CT)	0.04	6	n/a	n/a		
BCLL	0.0 *	Code IRC2018/TPI2014		Matrix-S							Weight: 99 lb	FT = 20%
BCDL	10.0											

LUMBER-
TOP CHORD 2x4 SP No.2 or 2x4 SPF No.2
BOT CHORD 2x4 SP No.1
WEBS 2x4 SP No.3

BRACING-
TOP CHORD Structural wood sheathing directly applied or 4-3-6 oc purlins.
BOT CHORD Rigid ceiling directly applied or 2-2-0 oc bracing.

REACTIONS. (size) 2=0-3-8, 6=0-3-8
Max Horz 2=85(LC 16)
Max Uplift 2=-65(LC 16), 6=-65(LC 17)
Max Grav 2=940(LC 2), 6=940(LC 2)

FORCES. (lb) - Max. Comp./Max. Ten. - All forces 250 (lb) or less except when shown.
TOP CHORD 2-3=-1452/192, 3-4=-1096/134, 4-5=-1096/134, 5-6=-1452/192
BOT CHORD 2-8=-126/1242, 6-8=-105/1242
WEBS 4-8=0/648, 5-8=-398/189, 3-8=-398/189

NOTES-
1) Unbalanced roof live loads have been considered for this design.
2) Wind: ASCE 7-16; Vult=120mph (3-second gust) Vasd=95mph; TCDL=6.0psf; BCDL=6.0psf; h=30ft; Cat. II; Exp B; Enclosed; MWFRS (envelope) gable end zone and C-C Exterior(2E) -0-10-8 to 2-1-8, Interior(1) 2-1-8 to 11-1-8, Exterior(2R) 11-1-8 to 14-1-8, Interior(1) 14-1-8 to 23-1-8 zone; cantilever left and right exposed ; end vertical left and right exposed;C-C for members and forces & MWFRS for reactions shown; Lumber DOL=1.60 plate grip DOL=1.60
3) TCLL: ASCE 7-16; Pr=20.0 psf (roof LL: Lum DOL=1.15 Plate DOL=1.15); Pg=15.0 psf; Pf=11.6 psf (Lum DOL=1.15 Plate DOL=1.15); Is=1.0; Rough Cat B; Partially Exp.; Ce=1.0; Cs=1.00; Ct=1.10
4) Unbalanced snow loads have been considered for this design.
5) This truss has been designed for greater of min roof live load of 12.0 psf or 1.00 times flat roof load of 11.6 psf on overhangs non-concurrent with other live loads.
6) This truss has been designed for a 10.0 psf bottom chord live load nonconcurrent with any other live loads.
7) * This truss has been designed for a live load of 20.0psf on the bottom chord in all areas where a rectangle 3-6-0 tall by 2-0-0 wide will fit between the bottom chord and any other members.
8) One H2.5A Simpson Strong-Tie connectors recommended to connect truss to bearing walls due to UPLIFT at jt(s) 2 and 6. This connection is for uplift only and does not consider lateral forces.
9) This truss is designed in accordance with the 2018 International Residential Code sections R502.11.1 and R802.10.2 and referenced standard ANSI/TPI 1.

March 26,2021

WARNING - Verify design parameters and READ NOTES ON THIS AND INCLUDED MITEK REFERENCE PAGE MII-7473 rev. 5/19/2020 BEFORE USE.
Design valid for use only with MiTek® connectors. This design is based only upon parameters shown, and is for an individual building component, not a truss system. Before use, the building designer must verify the applicability of design parameters and properly incorporate this design into the overall building design. Bracing indicated is to prevent buckling of individual truss web and/or chord members only. Additional temporary and permanent bracing is always required for stability and to prevent collapse with possible personal injury and property damage. For general guidance regarding the fabrication, storage, delivery, erection and bracing of trusses and truss systems, see **ANSI/TPI1 Quality Criteria, DSB-89 and BCSI Building Component Safety Information** available from Truss Plate Institute, 2670 Crain Highway, Suite 203 Waldorf, MD 20601

ENGINEERING BY TRENCO A MiTek Affiliate
818 Soundside Road
Edenton, NC 27932

Job	Truss	Truss Type	Qty	Ply	KB Home 237.2723.B
237_2723_B	A2	Common	1	1	I45358814 Job Reference (optional)

84 Components (Dunn), Dunn, NC - 28334, 8.430 s Mar 4 2021 MiTek Industries, Inc. Thu Mar 25 10:44:15 2021 Page 1
ID:ytBjKryWUodVVgHGUH7JdBzXTGY-_Mye8i_?da1xCXhKh6JzSvzck2ekzaUbMg8UGtzXQ4k

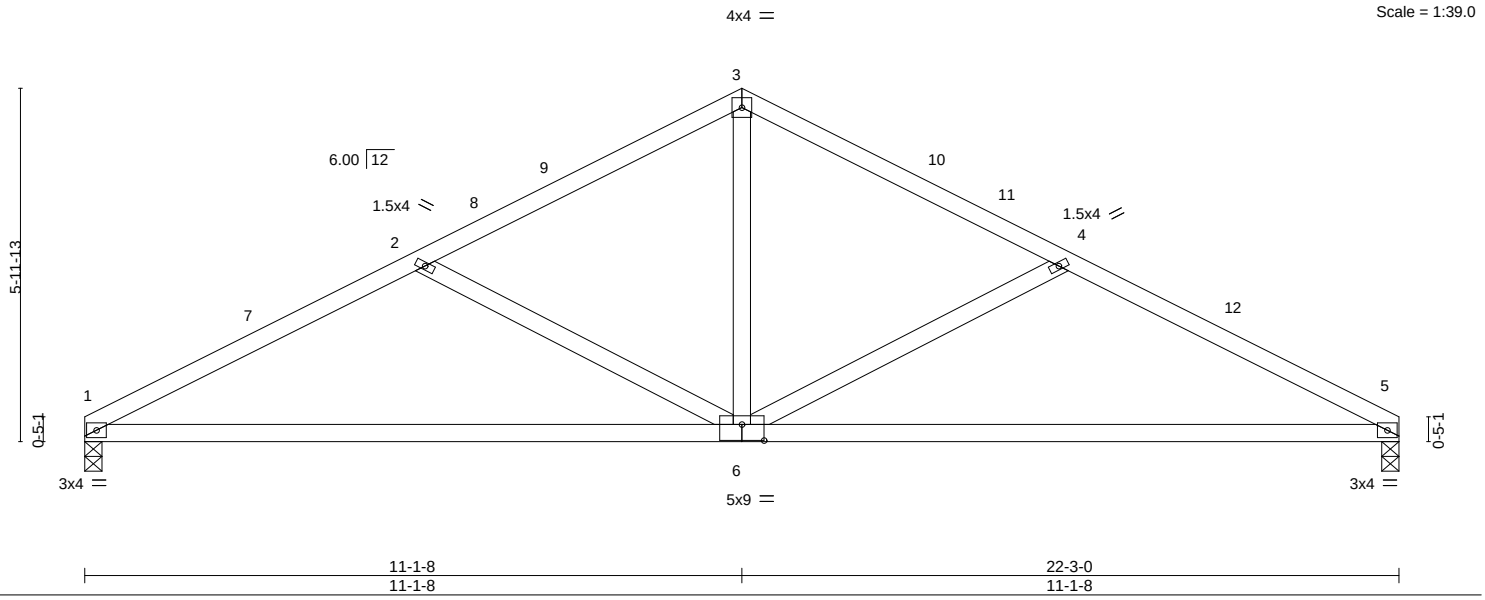

Plate Offsets (X,Y)-- [6:0-4-8,0-3-4]

LOADING (psf)		SPACING-	2-0-0	CSI.		DEFL.	in	(loc)	l/defl	L/d	PLATES	GRIP
TCLL (roof)	20.0	Plate Grip DOL	1.15	TC	0.46	Vert(LL)	-0.28	5-6	>936	240	MT20	197/144
Snow (Pf/Pg)	11.6/15.0	Lumber DOL	1.15	BC	0.96	Vert(CT)	-0.59	5-6	>449	180		
TCDL	10.0	Rep Stress Incr	YES	WB	0.30	Horz(CT)	0.04	5	n/a	n/a		
BCLL	0.0 *	Code IRC2018/TPI2014		Matrix-S							Weight: 96 lb	FT = 20%
BCDL	10.0											

LUMBER-
TOP CHORD 2x4 SP No.2 or 2x4 SPF No.2
BOT CHORD 2x4 SP No.1
WEBS 2x4 SP No.3

BRACING-
TOP CHORD Structural wood sheathing directly applied or 4-1-9 oc purlins.
BOT CHORD Rigid ceiling directly applied or 2-2-0 oc bracing.

REACTIONS. (size) 1=0-3-8, 5=0-3-8
Max Horz 1=81(LC 16)
Max Uplift 1=-49(LC 16), 5=-49(LC 17)
Max Grav 1=878(LC 2), 5=878(LC 2)

FORCES. (lb) - Max. Comp./Max. Ten. - All forces 250 (lb) or less except when shown.
TOP CHORD 1-2=-1463/202, 2-3=-1103/138, 3-4=-1103/138, 4-5=-1463/202
BOT CHORD 1-6=-136/1253, 5-6=-120/1253
WEBS 3-6=-5/650, 4-6=-403/195, 2-6=-403/194

NOTES-
1) Unbalanced roof live loads have been considered for this design.
2) Wind: ASCE 7-16; Vult=120mph (3-second gust) Vasd=95mph; TCDL=6.0psf; BCDL=6.0psf; h=30ft; Cat. II; Exp B; Enclosed; MWFRS (envelope) gable end zone and C-C Exterior(2E) 0-1-12 to 3-1-12, Interior(1) 3-1-12 to 11-1-8, Exterior(2R) 11-1-8 to 14-1-8 , Interior(1) 14-1-8 to 22-1-4 zone; cantilever left and right exposed ; end vertical left and right exposed;C-C for members and forces & MWFRS for reactions shown; Lumber DOL=1.60 plate grip DOL=1.60
3) TCLL: ASCE 7-16; Pr=20.0 psf (roof LL: Lum DOL=1.15 Plate DOL=1.15); Pg=15.0 psf; Pf=11.6 psf (Lum DOL=1.15 Plate DOL=1.15); Is=1.0; Rough Cat B; Partially Exp.; Ce=1.0; Cs=1.00; Ct=1.10
4) Unbalanced snow loads have been considered for this design.
5) This truss has been designed for a 10.0 psf bottom chord live load nonconcurrent with any other live loads.
6) * This truss has been designed for a live load of 20.0psf on the bottom chord in all areas where a rectangle 3-6-0 tall by 2-0-0 wide will fit between the bottom chord and any other members.
7) One H2.5A Simpson Strong-Tie connectors recommended to connect truss to bearing walls due to UPLIFT at jt(s) 1 and 5. This connection is for uplift only and does not consider lateral forces.
8) This truss is designed in accordance with the 2018 International Residential Code sections R502.11.1 and R802.10.2 and referenced standard ANSI/TPI 1.

March 26,2021

WARNING - Verify design parameters and READ NOTES ON THIS AND INCLUDED MITEK REFERENCE PAGE MII-7473 rev. 5/19/2020 BEFORE USE.
Design valid for use only with MiTek® connectors. This design is based only upon parameters shown, and is for an individual building component, not a truss system. Before use, the building designer must verify the applicability of design parameters and properly incorporate this design into the overall building design. Bracing indicated is to prevent buckling of individual truss web and/or chord members only. Additional temporary and permanent bracing is always required for stability and to prevent collapse with possible personal injury and property damage. For general guidance regarding the fabrication, storage, delivery, erection and bracing of trusses and truss systems, see **ANSI/TPI1 Quality Criteria, DSB-89 and BCSI Building Component Safety Information** available from Truss Plate Institute, 2670 Crain Highway, Suite 203 Waldorf, MD 20601

ENGINEERING BY TRENCO A MiTek Affiliate
818 Soundside Road
Edenton, NC 27932

Job	Truss	Truss Type	Qty	Ply	KB Home 237.2723.B
237_2723_B	AE	Common Structural Gable	1	1	I45358815 Job Reference (optional)

84 Components (Dunn), Dunn, NC - 28334, 8.430 s Mar 4 2021 MiTek Industries, Inc. Thu Mar 25 10:44:17 2021 Page 1
ID:ytBjKryWUodVVgHGUH7JdBzXTGY-wl3OZO?F9CHeSrrioXMRXK2zKsTORU7up_dbLmzXQ4i

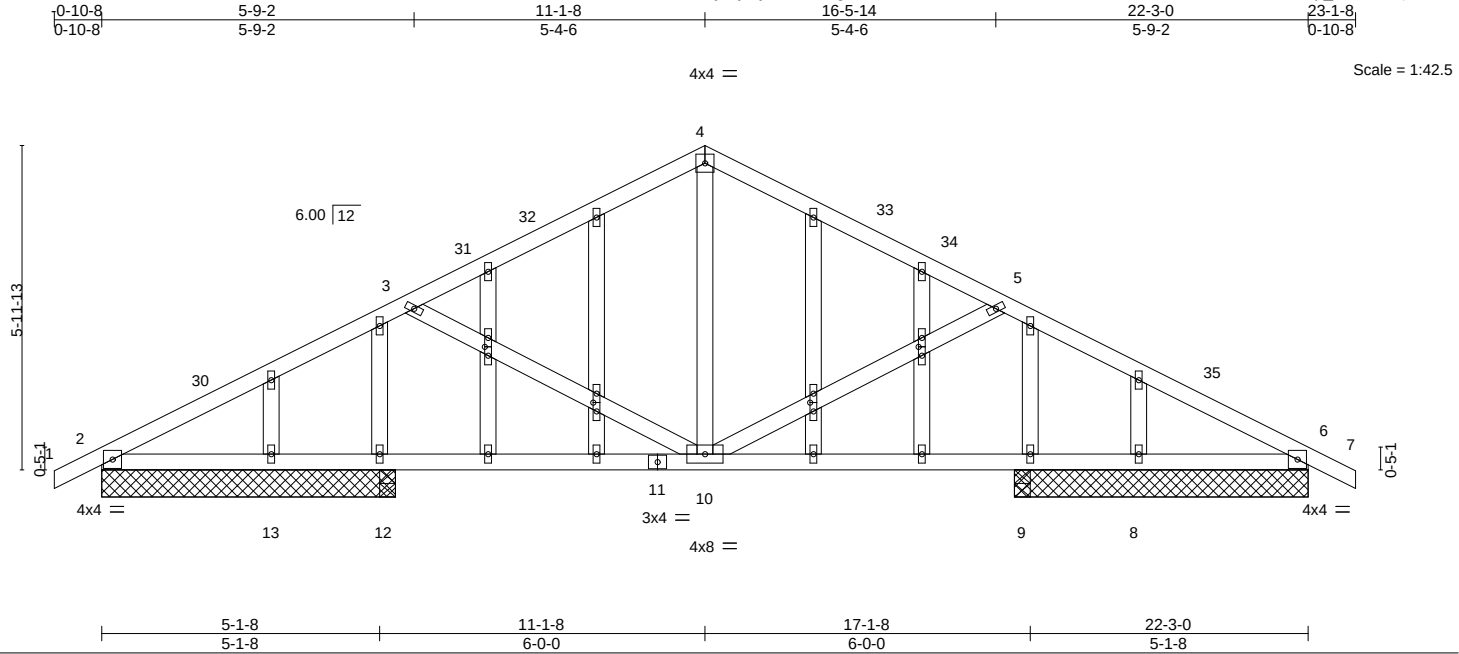

Plate Offsets (X,Y)-- [14:0-1-15,0-0-12], [17:0-1-15,0-0-12], [24:0-1-15,0-0-12], [27:0-1-15,0-0-12]

LOADING (psf)		**SPACING-** 2-0-0	**CSI.**		**DEFL.** in (loc) l/defl L/d	**PLATES**	**GRIP**
TCLL (roof)	20.0	Plate Grip DOL 1.15	TC	0.39	Vert(LL) -0.05 10 >999 240	MT20	197/144
Snow (Pf/Pg)	11.6/15.0	Lumber DOL 1.15	BC	0.44	Vert(CT) -0.09 10 >999 180		
TCDL	10.0	Rep Stress Incr YES	WB	0.29	Horz(CT) 0.04 6 n/a n/a		
BCLL	0.0 *	Code IRC2018/TPI2014	Matrix-S			Weight: 133 lb	FT = 20%
BCDL	10.0						

LUMBER-
TOP CHORD 2x4 SP No.2 or 2x4 SPF No.2
BOT CHORD 2x4 SP No.2 or 2x4 SPF No.2
WEBS 2x4 SP No.3
OTHERS 2x4 SP No.3

BRACING-
TOP CHORD Structural wood sheathing directly applied or 4-10-14 oc purlins.
BOT CHORD Rigid ceiling directly applied or 10-0-0 oc bracing.

REACTIONS. All bearings 5-5-0.
(lb) - Max Horz 2=-85(LC 17)
Max Uplift All uplift 100 lb or less at joint(s) except 2=-125(LC 16), 6=-125(LC 17)
Max Grav All reactions 250 lb or less at joint(s) 12, 12, 13, 9, 9, 8 except 2=765(LC 2), 6=765(LC 2)

FORCES. (lb) - Max. Comp./Max. Ten. - All forces 250 (lb) or less except when shown.
TOP CHORD 2-3=-1285/282, 3-4=-913/217, 4-5=-913/217, 5-6=-1285/282
BOT CHORD 2-13=-207/1076, 12-13=-207/1076, 10-12=-207/1076, 9-10=-187/1076, 8-9=-187/1076, 6-8=-187/1076
WEBS 4-10=-76/445, 5-10=-390/198, 3-10=-390/197

NOTES-
1) Unbalanced roof live loads have been considered for this design.
2) Wind: ASCE 7-16; Vult=120mph (3-second gust) Vasd=95mph; TCDL=6.0psf; BCDL=6.0psf; h=30ft; Cat. II; Exp B; Enclosed; MWFRS (envelope) gable end zone and C-C Exterior(2E) -0-10-8 to 2-1-8, Interior(1) 2-1-8 to 11-1-8, Exterior(2R) 11-1-8 to 14-1-8, Interior(1) 14-1-8 to 23-1-8 zone; cantilever left and right exposed ; end vertical left and right exposed;C-C for members and forces & MWFRS for reactions shown; Lumber DOL=1.60 plate grip DOL=1.60
3) Truss designed for wind loads in the plane of the truss only. For studs exposed to wind (normal to the face), see Standard Industry Gable End Details as applicable, or consult qualified building designer as per ANSI/TPI 1.
4) TCLL: ASCE 7-16; Pr=20.0 psf (roof LL: Lum DOL=1.15 Plate DOL=1.15); Pg=15.0 psf; Pf=11.6 psf (Lum DOL=1.15 Plate DOL=1.15); Is=1.0; Rough Cat B; Partially Exp.; Ce=1.0; Cs=1.00; Ct=1.10
5) Unbalanced snow loads have been considered for this design.
6) This truss has been designed for greater of min roof live load of 12.0 psf or 1.00 times flat roof load of 11.6 psf on overhangs non-concurrent with other live loads.
7) All plates are 1.5x4 MT20 unless otherwise indicated.
8) Gable studs spaced at 2-0-0 oc.
9) This truss has been designed for a 10.0 psf bottom chord live load nonconcurrent with any other live loads.
10) * This truss has been designed for a live load of 20.0psf on the bottom chord in all areas where a rectangle 3-6-0 tall by 2-0-0 wide will fit between the bottom chord and any other members.
11) N/A

12) This truss is designed in accordance with the 2018 International Residential Code sections R502.11.1 and R802.10.2 and referenced standard ANSI/TPI 1.

March 26,2021

WARNING - Verify design parameters and READ NOTES ON THIS AND INCLUDED MITEK REFERENCE PAGE MII-7473 rev. 5/19/2020 BEFORE USE.
Design valid for use only with MiTek® connectors. This design is based only upon parameters shown, and is for an individual building component, not a truss system. Before use, the building designer must verify the applicability of design parameters and properly incorporate this design into the overall building design. Bracing indicated is to prevent buckling of individual truss web and/or chord members only. Additional temporary and permanent bracing is always required for stability and to prevent collapse with possible personal injury and property damage. For general guidance regarding the fabrication, storage, delivery, erection and bracing of trusses and truss systems, see **ANSI/TPI1 Quality Criteria, DSB-89 and BCSI Building Component Safety Information** available from Truss Plate Institute, 2670 Crain Highway, Suite 203 Waldorf, MD 20601

ENGINEERING BY TRENCO A MiTek Affiliate
818 Soundside Road
Edenton, NC 27932

Job	Truss	Truss Type	Qty	Ply	KB Home 237.2723.B
237_2723_B	AG	COMMON GIRDER	1	3	I45358816 Job Reference (optional)

84 Components (Dunn), Dunn, NC - 28334, 8.430 s Mar 4 2021 MiTek Industries, Inc. Thu Mar 25 10:44:21 2021 Page 1

ID:ytBjKryWUodVVgHGUH7JdBzXTGY-pWJvOl2mCQn4wS9U1MQNhADeZTm2N9tUkcboUXzXQ4e

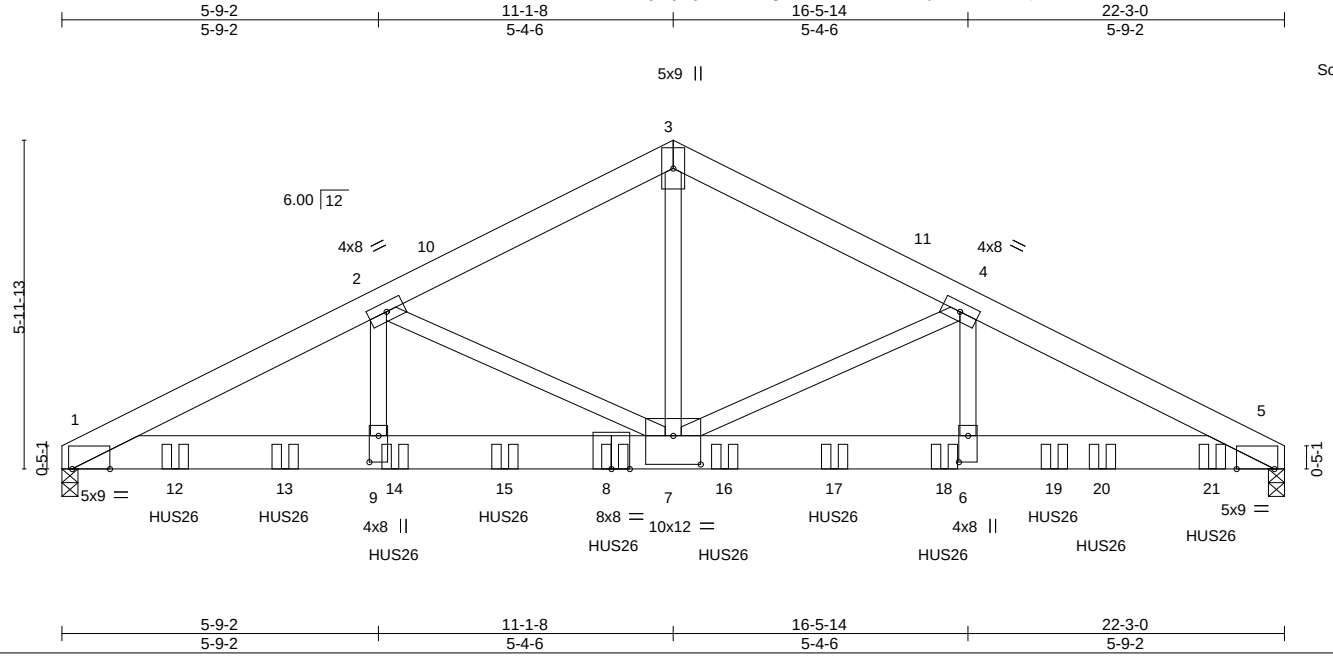

Plate Offsets (X,Y)-- [1:0-8-4,0-0-0], [5:0-8-4,0-0-0], [6:0-5-12,0-2-0], [7:0-6-0,0-6-4], [9:0-5-12,0-2-0]

LOADING (psf)		SPACING- 2-0-0	CSI.		DEFL.	in	(loc)	l/defl	L/d	PLATES	GRIP
TCLL (roof)	20.0	Plate Grip DOL 1.15	TC	0.50	Vert(LL)	-0.13	7-9	>999	240	MT20	197/144
Snow (Pf/Pg)	11.6/15.0	Lumber DOL 1.15	BC	0.65	Vert(CT)	-0.24	7-9	>999	180		
TCDL	10.0	Rep Stress Incr NO	WB	0.82	Horz(CT)	0.06	5	n/a	n/a		
BCLL	0.0 *	Code IRC2018/TPI2014	Matrix-S							Weight: 471 lb	FT = 20%
BCDL	10.0										

LUMBER-

TOP CHORD 2x6 SP No.2
BOT CHORD 2x8 SP DSS
WEBS 2x4 SP No.3 *Except*
3-7: 2x4 SP No.2 or 2x4 SPF No.2

BRACING-

TOP CHORD Structural wood sheathing directly applied or 6-0-0 oc purlins.
BOT CHORD Rigid ceiling directly applied or 10-0-0 oc bracing.

REACTIONS. (size) 1=(0-3-8 + TBE4 Simpson Strong-Tie) (req. 0-4-14), 5=(0-3-8 + TBE4 Simpson Strong-Tie) (req. 0-5-8)
Max Horz 1=-77(LC 41)
Max Uplift 1=-543(LC 12), 5=-614(LC 13)
Max Grav 1=9313(LC 3), 5=10550(LC 3)

FORCES. (lb) - Max. Comp./Max. Ten. - All forces 250 (lb) or less except when shown.
TOP CHORD 1-2=-16840/979, 2-3=-11720/711, 3-4=-11720/711, 4-5=-17662/1028
BOT CHORD 1-9=-897/14984, 7-9=-897/14984, 6-7=-864/15726, 5-6=-864/15726
WEBS 3-7=-542/10011, 4-7=-5908/441, 4-6=-232/5212, 2-7=-5074/391, 2-9=-191/4480

NOTES-

1) 3-ply truss to be connected together with 10d (0.131"x3") nails as follows:
Top chords connected as follows: 2x6 - 2 rows staggered at 0-9-0 oc.
Bottom chords connected as follows: 2x8 - 4 rows staggered at 0-4-0 oc.
Webs connected as follows: 2x4 - 1 row at 0-9-0 oc.
2) All loads are considered equally applied to all plies, except if noted as front (F) or back (B) face in the LOAD CASE(S) section. Ply to ply connections have been provided to distribute only loads noted as (F) or (B), unless otherwise indicated.
3) Unbalanced roof live loads have been considered for this design.
4) Wind: ASCE 7-16; Vult=120mph (3-second gust) Vasd=95mph; TCDL=6.0psf; BCDL=6.0psf; h=30ft; Cat. II; Exp B; Enclosed; MWFRS (envelope) gable end zone; cantilever left and right exposed ; end vertical left and right exposed; Lumber DOL=1.60 plate grip DOL=1.60
5) TCLL: ASCE 7-16; Pr=20.0 psf (roof LL: Lum DOL=1.15 Plate DOL=1.15); Pg=15.0 psf; Pf=11.6 psf (Lum DOL=1.15 Plate DOL=1.15); Is=1.0; Rough Cat B; Partially Exp.; Ce=1.0; Cs=1.00; Ct=1.10
6) Unbalanced snow loads have been considered for this design.
7) This truss has been designed for a 10.0 psf bottom chord live load nonconcurrent with any other live loads.
8) * This truss has been designed for a live load of 20.0psf on the bottom chord in all areas where a rectangle 3-6-0 tall by 2-0-0 wide will fit between the bottom chord and any other members.
9) Bearing at joint(s) 1, 5 considers parallel to grain value using ANSI/TPI 1 angle to grain formula. Building designer should verify capacity of bearing surface.
10) TBE4 Simpson Strong-Tie connectors recommended to connect truss to bearing walls due to UPLIFT at jt(s) 1 and 5. This connection is for uplift only and does not consider lateral forces.
11) This truss is designed in accordance with the 2018 International Residential Code sections R502.11.1 and R802.10.2 and referenced standard ANSI/TPI 1.
12) Use Simpson Strong-Tie HUS26 (14-10d Girder, 4-10d Truss) or equivalent spaced at 2-0-0 oc max. starting at 2-0-12 from the left end to 20-11-4 to connect truss(es) to back face of bottom chord.
13) Fill all nail holes where hanger is in contact with lumber.

Continued on page 2

March 26,2021

WARNING - Verify design parameters and READ NOTES ON THIS AND INCLUDED MITEK REFERENCE PAGE MII-7473 rev. 5/19/2020 BEFORE USE.
Design valid for use only with MiTek® connectors. This design is based only upon parameters shown, and is for an individual building component, not a truss system. Before use, the building designer must verify the applicability of design parameters and properly incorporate this design into the overall building design. Bracing indicated is to prevent buckling of individual truss web and/or chord members only. Additional temporary and permanent bracing is always required for stability and to prevent collapse with possible personal injury and property damage. For general guidance regarding the fabrication, storage, delivery, erection and bracing of trusses and truss systems, see **ANSI/TPI1 Quality Criteria, DSB-89 and BCSI Building Component Safety Information** available from Truss Plate Institute, 2670 Crain Highway, Suite 203 Waldorf, MD 20601

ENGINEERING BY TRENCO A MiTek Affiliate
818 Soundside Road
Edenton, NC 27932

LOAD CASE(S) Standard

1) Dead + Snow (balanced): Lumber Increase=1.15, Plate Increase=1.15
   Uniform Loads (plf)
   Vert: 1-3=-43, 3-5=-43, 1-5=-20
   Concentrated Loads (lb)
   Vert: 8=-1191(B) 12=-1191(B) 13=-1191(B) 14=-1191(B) 15=-1191(B) 16=-1191(B) 17=-1191(B) 18=-1191(B) 19=-1191(B) 20=-1191(B) 21=-1191(B)

WARNING - Verify design parameters and READ NOTES ON THIS AND INCLUDED MITEK REFERENCE PAGE MII-7473 rev. 5/19/2020 BEFORE USE.
Design valid for use only with MiTek® connectors. This design is based only upon parameters shown, and is for an individual building component, not a truss system. Before use, the building designer must verify the applicability of design parameters and properly incorporate this design into the overall building design. Bracing indicated is to prevent buckling of individual truss web and/or chord members only. Additional temporary and permanent bracing is always required for stability and to prevent collapse with possible personal injury and property damage. For general guidance regarding the fabrication, storage, delivery, erection and bracing of trusses and truss systems, see **ANSI/TPI1 Quality Criteria, DSB-89 and BCSI Building Component Safety Information** available from Truss Plate Institute, 2670 Crain Highway, Suite 203 Waldorf, MD 20601

ENGINEERING BY TRENCO A MiTek Affiliate
818 Soundside Road
Edenton, NC 27932

Job	Truss	Truss Type	Qty	Ply	KB Home 237.2723.B
237_2723_B	B1	COMMON	1	1	I45358817 Job Reference (optional)

84 Components (Dunn), Dunn, NC - 28334, 8.430 s Mar 4 2021 MiTek Industries, Inc. Thu Mar 25 10:44:22 2021 Page 1

ID:ytBjKryWUodVVgHGUH7JdBzXTGY-HitHc53OzkvxYckgb4xcENlptt4G6m9dzGKM0zzXQ4d

-0-10-8	4-9-14	8-10-0	12-10-2	17-8-0	18-6-8
0-10-8	4-9-14	4-0-2	4-0-2	4-9-14	0-10-8

Scale = 1:31.1

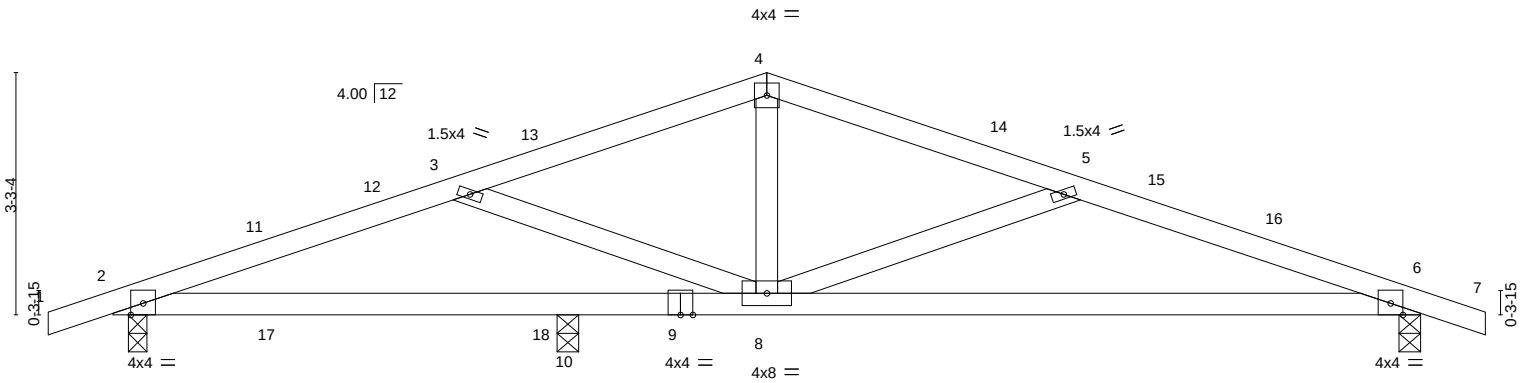

0-2-8	6-1-12	8-10-0	17-8-0
0-2-8	5-11-4	2-8-4	8-10-0

LOADING (psf)		**SPACING-** 2-0-0	**CSI.**		**DEFL.** in (loc) l/defl L/d	**PLATES**	**GRIP**
TCLL (roof)	20.0	Plate Grip DOL 1.15	TC	0.46	Vert(LL) -0.17 6-8 >799 240	MT20	197/144
Snow (Pf/Pg)	11.6/15.0	Lumber DOL 1.15	BC	0.78	Vert(CT) -0.38 6-8 >360 180		
TCDL	10.0	Rep Stress Incr YES	WB	0.18	Horz(CT) 0.04 6 n/a n/a		
BCLL	0.0 *	Code IRC2018/TPI2014	Matrix-S			Weight: 74 lb	FT = 20%
BCDL	10.0						

LUMBER-
TOP CHORD 2x4 SP No.2 or 2x4 SPF No.2
BOT CHORD 2x4 SP No.2 or 2x4 SPF No.2
WEBS 2x4 SP No.3

BRACING-
TOP CHORD Structural wood sheathing directly applied or 4-5-13 oc purlins.
BOT CHORD Rigid ceiling directly applied or 10-0-0 oc bracing.

REACTIONS. (size) 6=0-3-8, 2=0-3-0, 10=0-3-8
Max Horz 2=46(LC 16)
Max Uplift 6=-88(LC 13), 2=-135(LC 12), 10=-43(LC 12)
Max Grav 6=708(LC 2), 2=663(LC 2), 10=170(LC 7)

FORCES. (lb) - Max. Comp./Max. Ten. - All forces 250 (lb) or less except when shown.
TOP CHORD 2-3=-1380/252, 3-4=-990/107, 4-5=-992/108, 5-6=-1399/219
BOT CHORD 2-10=-201/1262, 8-10=-201/1262, 6-8=-167/1296
WEBS 3-8=-410/215, 4-8=0/368, 5-8=-439/178

NOTES-
1) Unbalanced roof live loads have been considered for this design.
2) Wind: ASCE 7-16; Vult=120mph (3-second gust) Vasd=95mph; TCDL=6.0psf; BCDL=6.0psf; h=30ft; Cat. II; Exp B; Enclosed; MWFRS (envelope) gable end zone and C-C Exterior(2E) -0-10-8 to 2-1-8, Interior(1) 2-1-8 to 8-10-0, Exterior(2R) 8-10-0 to 11-10-0, Interior(1) 11-10-0 to 18-6-8 zone; cantilever left and right exposed ; end vertical left and right exposed; porch left exposed;C-C for members and forces & MWFRS for reactions shown; Lumber DOL=1.60 plate grip DOL=1.60
3) TCLL: ASCE 7-16; Pr=20.0 psf (roof LL: Lum DOL=1.15 Plate DOL=1.15); Pg=15.0 psf; Pf=11.6 psf (Lum DOL=1.15 Plate DOL=1.15); Is=1.0; Rough Cat B; Partially Exp.; Ce=1.0; Cs=1.00; Ct=1.10
4) Unbalanced snow loads have been considered for this design.
5) This truss has been designed for greater of min roof live load of 12.0 psf or 1.00 times flat roof load of 11.6 psf on overhangs non-concurrent with other live loads.
6) This truss has been designed for a 10.0 psf bottom chord live load nonconcurrent with any other live loads.
7) * This truss has been designed for a live load of 20.0psf on the bottom chord in all areas where a rectangle 3-6-0 tall by 2-0-0 wide will fit between the bottom chord and any other members.
8) One H2.5A Simpson Strong-Tie connectors recommended to connect truss to bearing walls due to UPLIFT at jt(s) 6 and 2. This connection is for uplift only and does not consider lateral forces.
9) One MTS12 Simpson Strong-Tie connectors recommended to connect truss to bearing walls due to UPLIFT at jt(s) 10. This connection is for uplift only and does not consider lateral forces.
10) This truss is designed in accordance with the 2018 International Residential Code sections R502.11.1 and R802.10.2 and referenced standard ANSI/TPI 1.

March 26,2021

WARNING - Verify design parameters and READ NOTES ON THIS AND INCLUDED MITEK REFERENCE PAGE MII-7473 rev. 5/19/2020 BEFORE USE.
Design valid for use only with MiTek® connectors. This design is based only upon parameters shown, and is for an individual building component, not a truss system. Before use, the building designer must verify the applicability of design parameters and properly incorporate this design into the overall building design. Bracing indicated is to prevent buckling of individual truss web and/or chord members only. Additional temporary and permanent bracing is always required for stability and to prevent collapse with possible personal injury and property damage. For general guidance regarding the fabrication, storage, delivery, erection and bracing of trusses and truss systems, see **ANSI/TPI1 Quality Criteria, DSB-89 and BCSI Building Component Safety Information** available from Truss Plate Institute, 2670 Crain Highway, Suite 203 Waldorf, MD 20601

ENGINEERING BY TRENCO A MiTek Affiliate
818 Soundside Road
Edenton, NC 27932

Job	Truss	Truss Type	Qty	Ply	KB Home 237.2723.B
237_2723_B	B2	COMMON	3	1	I45358818 Job Reference (optional)

84 Components (Dunn), Dunn, NC - 28334, 8.430 s Mar 4 2021 MiTek Industries, Inc. Thu Mar 25 10:44:23 2021 Page 1

ID:ytBjKryWUodVVgHGUH7JdBzXTGY-luRfpR40k21oAmJs9nSrnbI_vHXnrCPmBw4vYPzXQ4c

5-11-0	9-11-2	14-9-0	15-7-8
5-11-0	4-0-2	4-9-14	0-10-8

Scale = 1:25.6

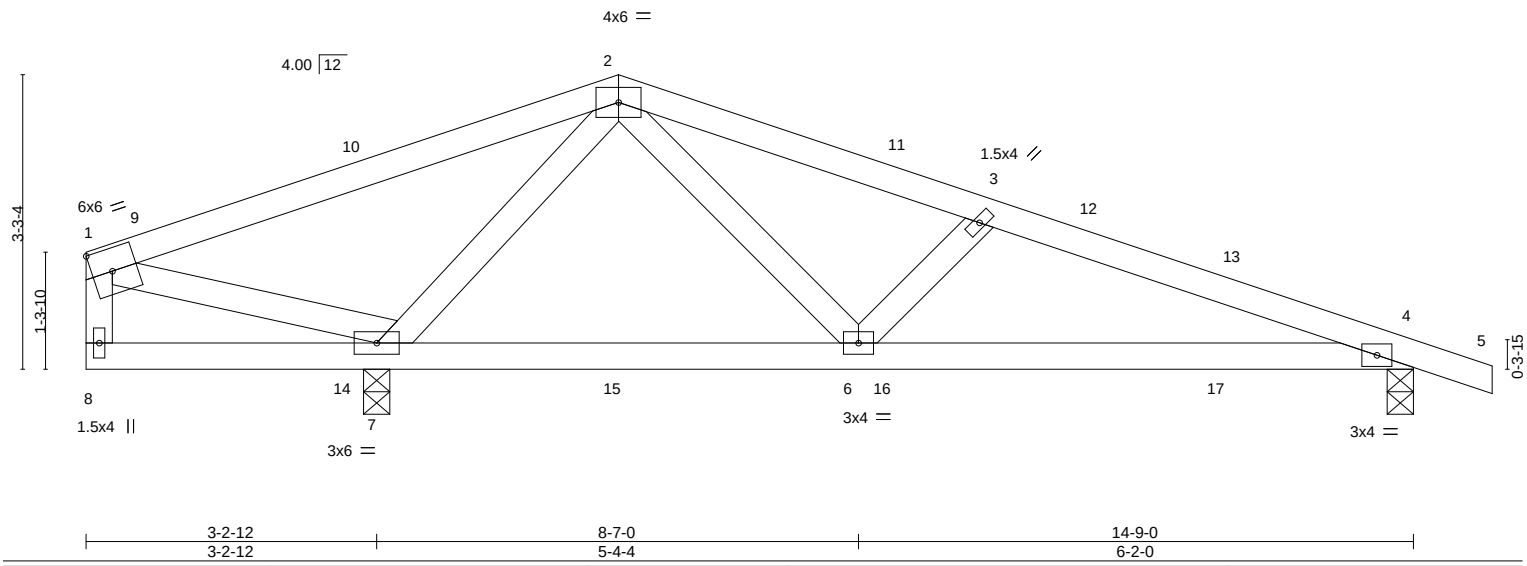

3-2-12	8-7-0	14-9-0
3-2-12	5-4-4	6-2-0

LOADING (psf)		**SPACING-** 2-0-0	**CSI.**		**DEFL.** in (loc) l/defl L/d	**PLATES**	**GRIP**
TCLL (roof)	20.0	Plate Grip DOL 1.15	TC	0.51	Vert(LL) 0.08 4-6 >999 240	MT20	197/144
Snow (Pf/Pg)	11.6/15.0	Lumber DOL 1.15	BC	0.37	Vert(CT) -0.08 4-6 >999 180		
TCDL	10.0	Rep Stress Incr YES	WB	0.24	Horz(CT) 0.01 4 n/a n/a		
BCLL	0.0 *	Code IRC2018/TPI2014	Matrix-S			Weight: 67 lb	FT = 20%
BCDL	10.0						

LUMBER-
TOP CHORD 2x4 SP No.2 or 2x4 SPF No.2
BOT CHORD 2x4 SP No.2 or 2x4 SPF No.2
WEBS 2x4 SP No.3

BRACING-
TOP CHORD Structural wood sheathing directly applied or 6-0-0 oc purlins, except end verticals.
BOT CHORD Rigid ceiling directly applied or 7-5-6 oc bracing.

REACTIONS. (size) 4=0-3-8, 7=0-3-8
Max Horz 7=-52(LC 17)
Max Uplift 4=-80(LC 12), 7=-190(LC 12)
Max Grav 4=487(LC 37), 7=736(LC 2)

FORCES. (lb) - Max. Comp./Max. Ten. - All forces 250 (lb) or less except when shown.
TOP CHORD 1-2=-196/313, 2-3=-604/600, 3-4=-812/644
BOT CHORD 4-6=-570/729
WEBS 2-7=-706/565, 2-6=-541/460, 3-6=-293/149, 1-7=-368/286

NOTES-
1) Unbalanced roof live loads have been considered for this design.
2) Wind: ASCE 7-16; Vult=120mph (3-second gust) Vasd=95mph; TCDL=6.0psf; BCDL=6.0psf; h=30ft; Cat. II; Exp B; Enclosed; MWFRS (envelope) gable end zone and C-C Exterior(2E) 0-1-12 to 3-1-12, Interior(1) 3-1-12 to 5-11-0, Exterior(2R) 5-11-0 to 8-11-0 , Interior(1) 8-11-0 to 15-7-8 zone; cantilever left and right exposed ; end vertical left and right exposed; porch left exposed;C-C for members and forces & MWFRS for reactions shown; Lumber DOL=1.60 plate grip DOL=1.60
3) TCLL: ASCE 7-16; Pr=20.0 psf (roof LL: Lum DOL=1.15 Plate DOL=1.15); Pg=15.0 psf; Pf=11.6 psf (Lum DOL=1.15 Plate DOL=1.15); Is=1.0; Rough Cat B; Partially Exp.; Ce=1.0; Cs=1.00; Ct=1.10
4) Unbalanced snow loads have been considered for this design.
5) This truss has been designed for greater of min roof live load of 12.0 psf or 1.00 times flat roof load of 11.6 psf on overhangs non-concurrent with other live loads.
6) This truss has been designed for a 10.0 psf bottom chord live load nonconcurrent with any other live loads.
7) * This truss has been designed for a live load of 20.0psf on the bottom chord in all areas where a rectangle 3-6-0 tall by 2-0-0 wide will fit between the bottom chord and any other members.
8) One H2.5A Simpson Strong-Tie connectors recommended to connect truss to bearing walls due to UPLIFT at jt(s) 4 and 7. This connection is for uplift only and does not consider lateral forces.
9) This truss is designed in accordance with the 2018 International Residential Code sections R502.11.1 and R802.10.2 and referenced standard ANSI/TPI 1.

March 26,2021

WARNING - Verify design parameters and READ NOTES ON THIS AND INCLUDED MITEK REFERENCE PAGE MII-7473 rev. 5/19/2020 BEFORE USE.
Design valid for use only with MiTek® connectors. This design is based only upon parameters shown, and is for an individual building component, not a truss system. Before use, the building designer must verify the applicability of design parameters and properly incorporate this design into the overall building design. Bracing indicated is to prevent buckling of individual truss web and/or chord members only. Additional temporary and permanent bracing is always required for stability and to prevent collapse with possible personal injury and property damage. For general guidance regarding the fabrication, storage, delivery, erection and bracing of trusses and truss systems, see **ANSI/TPI1 Quality Criteria, DSB-89 and BCSI Building Component Safety Information** available from Truss Plate Institute, 2670 Crain Highway, Suite 203 Waldorf, MD 20601

ENGINEERING BY TRENCO A MiTek Affiliate
818 Soundside Road
Edenton, NC 27932

Job	Truss	Truss Type	Qty	Ply	KB Home 237.2723.B
237_2723_B	BE	COMMON STRUCTURAL GA	1	1	I45358819 Job Reference (optional)

84 Components (Dunn), Dunn, NC - 28334, 8.430 s Mar 4 2021 MiTek Industries, Inc. Thu Mar 25 10:44:25 2021 Page 1
ID:ytBjKryWUodVVgHGUH7JdBzXTGY-hHYQE76GGfHWP3SFGCVJs?NEA468J8g3fEZ0dIzXQ4a

-0-10-8	4-9-14	8-10-0	12-10-2	17-8-0	18-6-8
0-10-8	4-9-14	4-0-2	4-0-2	4-9-14	0-10-8

Scale = 1:31.1

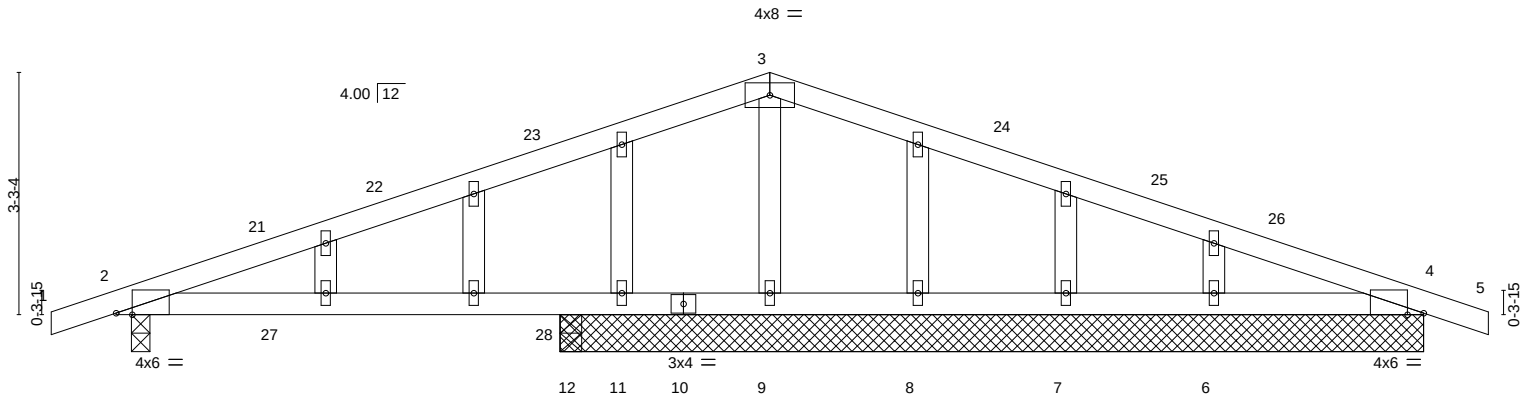

0-2-8	6-0-0	8-10-0	17-8-0
0-2-8	5-9-8	2-10-0	8-10-0

Plate Offsets (X,Y)-- [2:0-2-10,Edge], [4:0-2-10,Edge]

LOADING (psf)		**SPACING-** 2-0-0	**CSI.**		**DEFL.**	in	(loc)	l/defl	L/d	**PLATES**	**GRIP**
TCLL (roof)	20.0	Plate Grip DOL 1.15	TC	0.78	Vert(LL)	0.09	2-12	>844	240	MT20	197/144
Snow (Pf/Pg)	11.6/15.0	Lumber DOL 1.15	BC	0.77	Vert(CT)	-0.10	2-12	>725	180		
TCDL	10.0	Rep Stress Incr YES	WB	0.13	Horz(CT)	0.00	4	n/a	n/a		
BCLL	0.0 *	Code IRC2018/TPI2014	Matrix-S							Weight: 73 lb	FT = 20%
BCDL	10.0										

LUMBER-
TOP CHORD 2x4 SP No.1
BOT CHORD 2x4 SP No.2 or 2x4 SPF No.2
WEBS 2x4 SP No.3
OTHERS 2x4 SP No.3

BRACING-
TOP CHORD Structural wood sheathing directly applied or 6-0-0 oc purlins.
BOT CHORD Rigid ceiling directly applied or 10-0-0 oc bracing.

REACTIONS. All bearings 11-8-0 except (jt=length) 2=0-3-0, 12=0-3-8.
(lb) - Max Horz 2=46(LC 16)
Max Uplift All uplift 100 lb or less at joint(s) 7, 6, 4 except 9=-103(LC 12), 11=-262(LC 36), 2=-119(LC 12), 12=-118(LC 12)
Max Grav All reactions 250 lb or less at joint(s) 11, 8, 7, 4 except 9=561(LC 2), 6=259(LC 37), 2=334(LC 36), 12=445(LC 7)

FORCES. (lb) - Max. Comp./Max. Ten. - All forces 250 (lb) or less except when shown.
WEBS 3-9=-507/182

NOTES-
1) Unbalanced roof live loads have been considered for this design.
2) Wind: ASCE 7-16; Vult=120mph (3-second gust) Vasd=95mph; TCDL=6.0psf; BCDL=6.0psf; h=30ft; Cat. II; Exp B; Enclosed; MWFRS (envelope) gable end zone and C-C Exterior(2E) -0-10-8 to 2-1-8, Interior(1) 2-1-8 to 8-10-0, Exterior(2R) 8-10-0 to 11-10-0, Interior(1) 11-10-0 to 18-6-8 zone; cantilever left and right exposed ; end vertical left and right exposed; porch left exposed;C-C for members and forces & MWFRS for reactions shown; Lumber DOL=1.60 plate grip DOL=1.60
3) Truss designed for wind loads in the plane of the truss only. For studs exposed to wind (normal to the face), see Standard Industry Gable End Details as applicable, or consult qualified building designer as per ANSI/TPI 1.
4) TCLL: ASCE 7-16; Pr=20.0 psf (roof LL: Lum DOL=1.15 Plate DOL=1.15); Pg=15.0 psf; Pf=11.6 psf (Lum DOL=1.15 Plate DOL=1.15); Is=1.0; Rough Cat B; Partially Exp.; Ce=1.0; Cs=1.00; Ct=1.10
5) Unbalanced snow loads have been considered for this design.
6) This truss has been designed for greater of min roof live load of 12.0 psf or 1.00 times flat roof load of 11.6 psf on overhangs non-concurrent with other live loads.
7) All plates are 1.5x4 MT20 unless otherwise indicated.
8) Gable studs spaced at 2-0-0 oc.
9) This truss has been designed for a 10.0 psf bottom chord live load nonconcurrent with any other live loads.
10) * This truss has been designed for a live load of 20.0psf on the bottom chord in all areas where a rectangle 3-6-0 tall by 2-0-0 wide will fit between the bottom chord and any other members.
11) Provide mechanical connection (by others) of truss to bearing plate capable of withstanding 100 lb uplift at joint(s) 7, 6, 4 except (jt=lb) 9=103, 11=262, 2=119, 12=118.
12) This truss is designed in accordance with the 2018 International Residential Code sections R502.11.1 and R802.10.2 and referenced standard ANSI/TPI 1.

March 26,2021

WARNING - Verify design parameters and READ NOTES ON THIS AND INCLUDED MITEK REFERENCE PAGE MII-7473 rev. 5/19/2020 BEFORE USE.
Design valid for use only with MiTek® connectors. This design is based only upon parameters shown, and is for an individual building component, not a truss system. Before use, the building designer must verify the applicability of design parameters and properly incorporate this design into the overall building design. Bracing indicated is to prevent buckling of individual truss web and/or chord members only. Additional temporary and permanent bracing is always required for stability and to prevent collapse with possible personal injury and property damage. For general guidance regarding the fabrication, storage, delivery, erection and bracing of trusses and truss systems, see **ANSI/TPI1 Quality Criteria, DSB-89 and BCSI Building Component Safety Information** available from Truss Plate Institute, 2670 Crain Highway, Suite 203 Waldorf, MD 20601

ENGINEERING BY TRENCO A MiTek Affiliate
818 Soundside Road
Edenton, NC 27932

Job	Truss	Truss Type	Qty	Ply	KB Home 237.2723.B
237_2723_B	T	Common	11	1	I45358820 Job Reference (optional)

84 Components (Dunn), Dunn, NC - 28334, 8.430 s Mar 4 2021 MiTek Industries, Inc. Thu Mar 25 10:44:27 2021 Page 1

ID:ytBjKryWUodVVgHGUH7JdBzXTGY-eggAfo7WoGXEfNcdOdXnxQTaQunwnwvM6Y26hBzXQ4Y

-0-10-8	6-9-3	13-1-9	19-6-0	25-10-7	32-2-13	38-7-8
0-10-8	6-9-3	6-4-7	6-4-7	6-4-7	6-4-7	6-4-11

Scale = 1:67.3

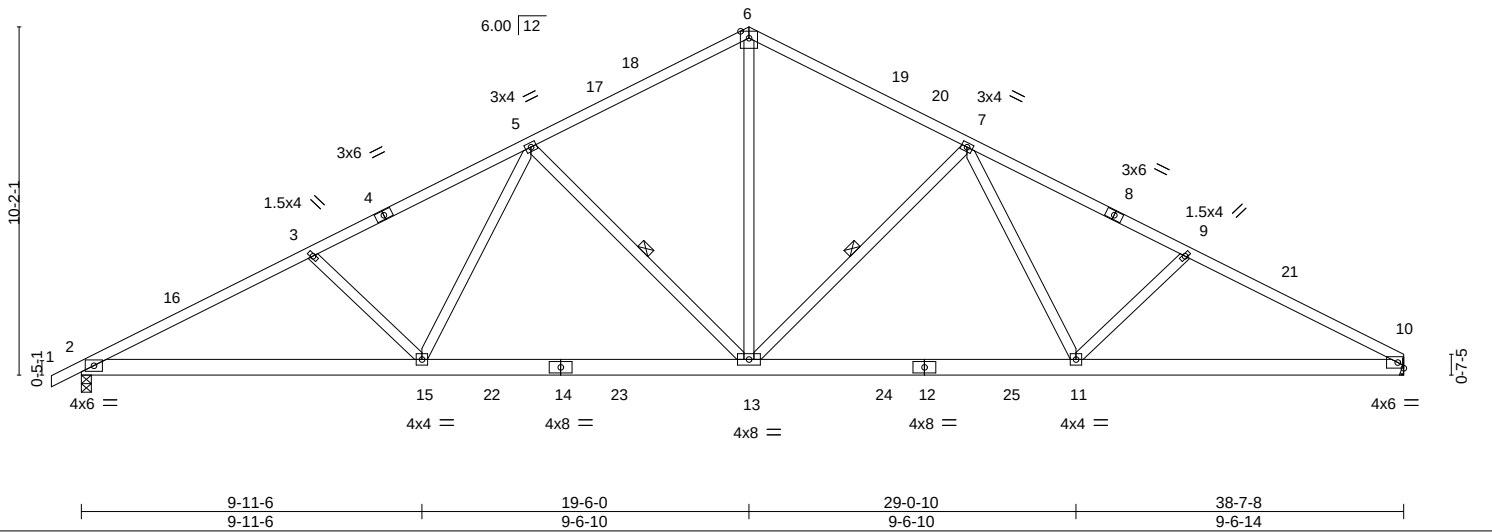

9-11-6	19-6-0	29-0-10	38-7-8
9-11-6	9-6-10	9-6-10	9-6-14

LOADING (psf)		**SPACING-** 2-0-0	**CSI.**	**DEFL.** in (loc) l/defl L/d	**PLATES**	**GRIP**
TCLL (roof)	20.0	Plate Grip DOL 1.15	TC 0.80	Vert(LL) -0.21 13-15 >999 240	MT20	197/144
Snow (Pf/Pg)	11.6/15.0	Lumber DOL 1.15	BC 0.81	Vert(CT) -0.37 13-15 >999 180		
TCDL	10.0	Rep Stress Incr YES	WB 0.59	Horz(CT) 0.10 10 n/a n/a		
BCLL	0.0 *	Code IRC2018/TPI2014	Matrix-S		Weight: 230 lb	FT = 20%
BCDL	10.0					

LUMBER-
TOP CHORD 2x4 SP No.2 or 2x4 SPF No.2
BOT CHORD 2x6 SP No.2
WEBS 2x4 SP No.3

BRACING-
TOP CHORD Structural wood sheathing directly applied or 2-2-0 oc purlins.
BOT CHORD Rigid ceiling directly applied or 10-0-0 oc bracing.
WEBS 1 Row at midpt 7-13, 5-13

REACTIONS. (size) 2=0-3-8, 10=Mechanical
Max Horz 2=151(LC 16)
Max Uplift 2=-103(LC 16), 10=-84(LC 17)
Max Grav 2=1740(LC 3), 10=1688(LC 3)

FORCES. (lb) - Max. Comp./Max. Ten. - All forces 250 (lb) or less except when shown.
TOP CHORD 2-3=-3141/185, 3-5=-2907/166, 5-6=-2001/199, 6-7=-2001/201, 7-9=-2852/173, 9-10=-3049/181
BOT CHORD 2-15=-233/2732, 13-15=-107/2240, 11-13=-12/2216, 10-11=-92/2641
WEBS 6-13=-50/1428, 7-13=-724/191, 7-11=-5/630, 9-11=-302/178, 5-13=-756/193, 5-15=-6/682, 3-15=-347/176

NOTES-
1) Unbalanced roof live loads have been considered for this design.
2) Wind: ASCE 7-16; Vult=120mph (3-second gust) Vasd=95mph; TCDL=6.0psf; BCDL=6.0psf; h=30ft; Cat. II; Exp B; Enclosed; MWFRS (envelope) gable end zone and C-C Exterior(2E) -0-10-8 to 2-11-14, Interior(1) 2-11-14 to 19-6-0, Exterior(2R) 19-6-0 to 23-4-6, Interior(1) 23-4-6 to 38-6-12 zone; cantilever left and right exposed ; end vertical left and right exposed;C-C for members and forces & MWFRS for reactions shown; Lumber DOL=1.60 plate grip DOL=1.60
3) TCLL: ASCE 7-16; Pr=20.0 psf (roof LL: Lum DOL=1.15 Plate DOL=1.15); Pg=15.0 psf; Pf=11.6 psf (Lum DOL=1.15 Plate DOL=1.15); Is=1.0; Rough Cat B; Partially Exp.; Ce=1.0; Cs=1.00; Ct=1.10
4) Unbalanced snow loads have been considered for this design.
5) This truss has been designed for greater of min roof live load of 12.0 psf or 1.00 times flat roof load of 11.6 psf on overhangs non-concurrent with other live loads.
6) This truss has been designed for a 10.0 psf bottom chord live load nonconcurrent with any other live loads.
7) * This truss has been designed for a live load of 20.0psf on the bottom chord in all areas where a rectangle 3-6-0 tall by 2-0-0 wide will fit between the bottom chord and any other members, with BCDL = 10.0psf.
8) Refer to girder(s) for truss to truss connections.
9) Provide mechanical connection (by others) of truss to bearing plate capable of withstanding 100 lb uplift at joint(s) 10.
10) One H2.5A Simpson Strong-Tie connectors recommended to connect truss to bearing walls due to UPLIFT at jt(s) 2. This connection is for uplift only and does not consider lateral forces.
11) This truss is designed in accordance with the 2018 International Residential Code sections R502.11.1 and R802.10.2 and referenced standard ANSI/TPI 1.

March 26,2021

WARNING - Verify design parameters and READ NOTES ON THIS AND INCLUDED MITEK REFERENCE PAGE MII-7473 rev. 5/19/2020 BEFORE USE.
Design valid for use only with MiTek® connectors. This design is based only upon parameters shown, and is for an individual building component, not a truss system. Before use, the building designer must verify the applicability of design parameters and properly incorporate this design into the overall building design. Bracing indicated is to prevent buckling of individual truss web and/or chord members only. Additional temporary and permanent bracing is always required for stability and to prevent collapse with possible personal injury and property damage. For general guidance regarding the fabrication, storage, delivery, erection and bracing of trusses and truss systems, see **ANSI/TPI1 Quality Criteria, DSB-89 and BCSI Building Component Safety Information** available from Truss Plate Institute, 2670 Crain Highway, Suite 203 Waldorf, MD 20601

ENGINEERING BY TRENCO A MiTek Affiliate
818 Soundside Road
Edenton, NC 27932

Job	Truss	Truss Type	Qty	Ply	KB Home 237.2723.B
237_2723_B	T1	Common	2	1	I45358821 Job Reference (optional)

84 Components (Dunn), Dunn, NC - 28334, 8.430 s Mar 4 2021 MiTek Industries, Inc. Thu Mar 25 10:44:28 2021 Page 1

ID:ytBjKryWUodVVgHGUH7JdBzXTGY-6sEYs889Zaf5GXBqxK20Ue?nPI75WN?WLCngEdzXQ4X

-0-10-8	6-9-3	13-1-9	19-6-0	25-10-7	32-2-13	39-0-0	39-10-8
0-10-8	6-9-3	6-4-7	6-4-7	6-4-7	6-4-7	6-9-3	0-10-8

Scale = 1:68.0

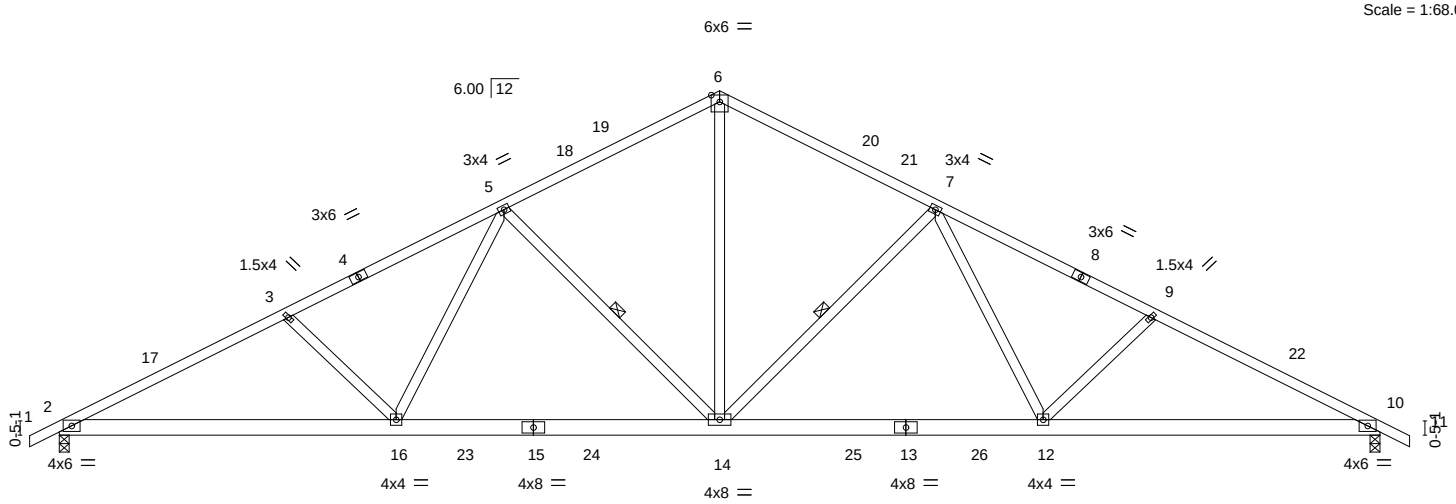

9-11-6	19-6-0	29-0-10	39-0-0
9-11-6	9-6-10	9-6-10	9-11-6

LOADING (psf)		**SPACING-** 2-0-0	**CSI.**		**DEFL.** in (loc) l/defl L/d	**PLATES**	**GRIP**
TCLL (roof)	20.0	Plate Grip DOL 1.15	TC	0.65	Vert(LL) -0.21 12-14 >999 240	MT20	197/144
Snow (Pf/Pg)	11.6/15.0	Lumber DOL 1.15	BC	0.81	Vert(CT) -0.38 12-14 >999 180		
TCDL	10.0	Rep Stress Incr YES	WB	0.60	Horz(CT) 0.10 10 n/a n/a		
BCLL	0.0 *	Code IRC2018/TPI2014	Matrix-S			Weight: 233 lb	FT = 20%
BCDL	10.0						

LUMBER-
TOP CHORD 2x4 SP No.2 or 2x4 SPF No.2
BOT CHORD 2x6 SP No.2
WEBS 2x4 SP No.3

BRACING-
TOP CHORD Structural wood sheathing directly applied or 2-5-12 oc purlins.
BOT CHORD Rigid ceiling directly applied or 10-0-0 oc bracing.
WEBS 1 Row at midpt 7-14, 5-14

REACTIONS. (size) 2=0-3-8, 10=0-3-8
Max Horz 2=145(LC 20)
Max Uplift 2=-103(LC 16), 10=-103(LC 17)
Max Grav 2=1752(LC 3), 10=1752(LC 3)

FORCES. (lb) - Max. Comp./Max. Ten. - All forces 250 (lb) or less except when shown.
TOP CHORD 2-3=-3167/184, 3-5=-2934/166, 5-6=-2028/200, 6-7=-2028/200, 7-9=-2934/166, 9-10=-3167/185
BOT CHORD 2-16=-227/2756, 14-16=-101/2264, 12-14=-5/2264, 10-12=-82/2756
WEBS 6-14=-49/1452, 7-14=-756/193, 7-12=-6/682, 9-12=-347/177, 5-14=-756/193, 5-16=-6/682, 3-16=-347/176

NOTES-
1) Unbalanced roof live loads have been considered for this design.
2) Wind: ASCE 7-16; Vult=120mph (3-second gust) Vasd=95mph; TCDL=6.0psf; BCDL=6.0psf; h=30ft; Cat. II; Exp B; Enclosed; MWFRS (envelope) gable end zone and C-C Exterior(2E) -0-10-8 to 3-0-5, Interior(1) 3-0-5 to 19-6-0, Exterior(2R) 19-6-0 to 23-4-13, Interior(1) 23-4-13 to 39-10-8 zone; cantilever left and right exposed ; end vertical left and right exposed;C-C for members and forces & MWFRS for reactions shown; Lumber DOL=1.60 plate grip DOL=1.60
3) TCLL: ASCE 7-16; Pr=20.0 psf (roof LL: Lum DOL=1.15 Plate DOL=1.15); Pg=15.0 psf; Pf=11.6 psf (Lum DOL=1.15 Plate DOL=1.15); Is=1.0; Rough Cat B; Partially Exp.; Ce=1.0; Cs=1.00; Ct=1.10
4) Unbalanced snow loads have been considered for this design.
5) This truss has been designed for greater of min roof live load of 12.0 psf or 1.00 times flat roof load of 11.6 psf on overhangs non-concurrent with other live loads.
6) This truss has been designed for a 10.0 psf bottom chord live load nonconcurrent with any other live loads.
7) * This truss has been designed for a live load of 20.0psf on the bottom chord in all areas where a rectangle 3-6-0 tall by 2-0-0 wide will fit between the bottom chord and any other members, with BCDL = 10.0psf.
8) One H2.5A Simpson Strong-Tie connectors recommended to connect truss to bearing walls due to UPLIFT at jt(s) 2 and 10. This connection is for uplift only and does not consider lateral forces.
9) This truss is designed in accordance with the 2018 International Residential Code sections R502.11.1 and R802.10.2 and referenced standard ANSI/TPI 1.

March 26,2021

WARNING - Verify design parameters and READ NOTES ON THIS AND INCLUDED MITEK REFERENCE PAGE MII-7473 rev. 5/19/2020 BEFORE USE.
Design valid for use only with MiTek® connectors. This design is based only upon parameters shown, and is for an individual building component, not a truss system. Before use, the building designer must verify the applicability of design parameters and properly incorporate this design into the overall building design. Bracing indicated is to prevent buckling of individual truss web and/or chord members only. Additional temporary and permanent bracing is always required for stability and to prevent collapse with possible personal injury and property damage. For general guidance regarding the fabrication, storage, delivery, erection and bracing of trusses and truss systems, see **ANSI/TPI1 Quality Criteria, DSB-89 and BCSI Building Component Safety Information** available from Truss Plate Institute, 2670 Crain Highway, Suite 203 Waldorf, MD 20601

ENGINEERING BY TRENCO A MiTek Affiliate
818 Soundside Road
Edenton, NC 27932

Job	Truss	Truss Type	Qty	Ply	KB Home 237.2723.B
237_2723_B	T1A	ROOF TRUSS	5	1	I45358822 Job Reference (optional)

84 Components (Dunn), Dunn, NC - 28334, 8.430 s Mar 4 2021 MiTek Industries, Inc. Thu Mar 25 10:44:30 2021 Page 1

ID:ytBjKryWUodVVgHGUH7JdBzXTGY-2FMJHq9P5BwoWrLC3l4UZ355B5s5_IyooVGnIVzXQ4V

-0-10-8	6-9-3	14-3-0	19-6-0	24-9-0	32-2-13	39-0-0	39-10-8
0-10-8	6-9-3	7-5-13	5-3-0	5-3-0	7-5-13	6-9-3	0-10-8

Scale = 1:72.9

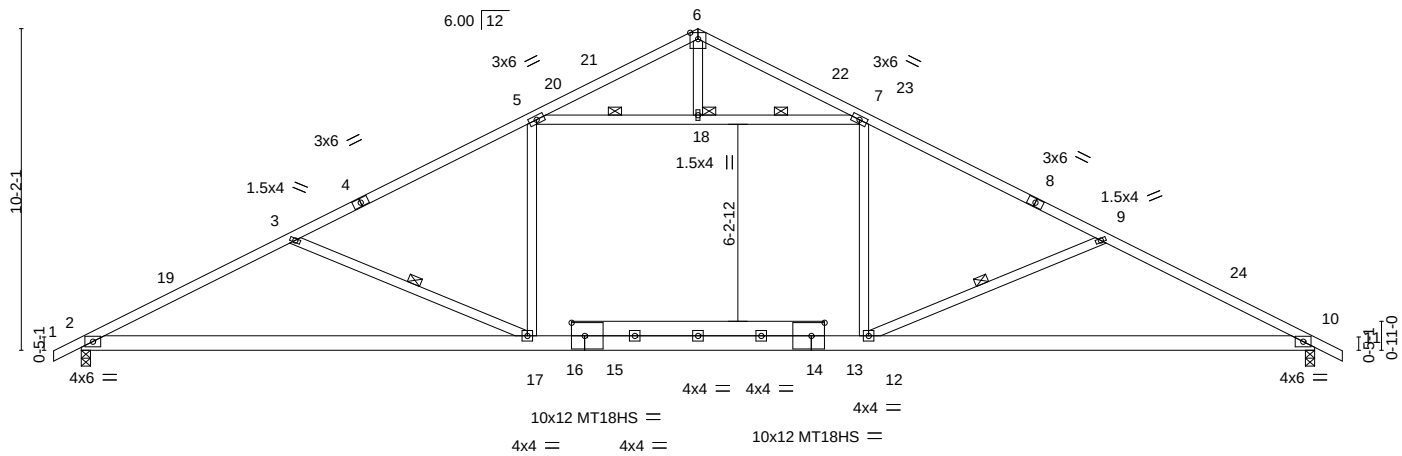

14-3-0	24-9-0	39-0-0
14-3-0	10-6-0	14-3-0

LOADING (psf)		**SPACING-** 2-0-0	**CSI.**		**DEFL.** in (loc) l/defl L/d	**PLATES**	**GRIP**
TCLL (roof)	20.0	Plate Grip DOL 1.15	TC	0.83	Vert(LL) -0.82 2-17 >568 240	MT20	197/144
Snow (Pf/Pg)	11.6/15.0	Lumber DOL 1.15	BC	0.59	Vert(CT) -1.08 2-17 >430 180	MT18HS	244/190
TCDL	10.0	Rep Stress Incr YES	WB	0.57	Horz(CT) 0.08 10 n/a n/a		
BCLL	0.0 *	Code IRC2018/TPI2014	Matrix-S		Attic -0.62 12-17 201 360	Weight: 241 lb	FT = 20%
BCDL	10.0						

LUMBER-

TOP CHORD 2x4 SP No.2 or 2x4 SPF No.2
BOT CHORD 2x6 SP DSS *Except*
13-16,14-15: 2x6 SP No.2
WEBS 2x4 SP No.3

BRACING-

TOP CHORD Structural wood sheathing directly applied or 2-2-0 oc purlins.
BOT CHORD Rigid ceiling directly applied or 10-0-0 oc bracing.
WEBS 1 Row at midpt 9-12, 3-17, 5-18, 7-18
JOINTS 1 Brace at Jt(s): 18

REACTIONS. (size) 2=0-3-8, 10=0-3-8
Max Horz 2=145(LC 20)
Max Uplift 2=-72(LC 16), 10=-72(LC 17)
Max Grav 2=1773(LC 3), 10=1773(LC 3)

FORCES. (lb) - Max. Comp./Max. Ten. - All forces 250 (lb) or less except when shown.
TOP CHORD 2-3=-3296/151, 3-5=-2894/87, 5-6=-504/68, 6-7=-504/68, 7-9=-2894/87, 9-10=-3296/151
BOT CHORD 2-17=-186/2875, 12-17=0/2510, 10-12=-47/2875
WEBS 7-12=0/766, 9-12=-569/272, 5-17=0/766, 3-17=-569/272, 5-18=-2160/101, 7-18=-2160/101

NOTES-

1) Unbalanced roof live loads have been considered for this design.
2) Wind: ASCE 7-16; Vult=120mph (3-second gust) Vasd=95mph; TCDL=6.0psf; BCDL=6.0psf; h=30ft; Cat. II; Exp B; Enclosed; MWFRS (envelope) gable end zone and C-C Exterior(2E) -0-10-8 to 3-0-5, Interior(1) 3-0-5 to 19-6-0, Exterior(2R) 19-6-0 to 23-4-13, Interior(1) 23-4-13 to 39-10-8 zone; cantilever left and right exposed ; end vertical left and right exposed;C-C for members and forces & MWFRS for reactions shown; Lumber DOL=1.60 plate grip DOL=1.60
3) TCLL: ASCE 7-16; Pr=20.0 psf (roof LL: Lum DOL=1.15 Plate DOL=1.15); Pg=15.0 psf; Pf=11.6 psf (Lum DOL=1.15 Plate DOL=1.15); Is=1.0; Rough Cat B; Partially Exp.; Ce=1.0; Cs=1.00; Ct=1.10
4) Unbalanced snow loads have been considered for this design.
5) This truss has been designed for greater of min roof live load of 12.0 psf or 1.00 times flat roof load of 11.6 psf on overhangs non-concurrent with other live loads.
6) All plates are MT20 plates unless otherwise indicated.
7) This truss has been designed for a 10.0 psf bottom chord live load nonconcurrent with any other live loads.
8) * This truss has been designed for a live load of 20.0psf on the bottom chord in all areas where a rectangle 3-6-0 tall by 2-0-0 wide will fit between the bottom chord and any other members.
9) Ceiling dead load (5.0 psf) on member(s). 5-18, 7-18
10) Bottom chord live load (40.0 psf) and additional bottom chord dead load (0.0 psf) applied only to room. 12-17
11) One H2.5A Simpson Strong-Tie connectors recommended to connect truss to bearing walls due to UPLIFT at jt(s) 2 and 10. This connection is for uplift only and does not consider lateral forces.
12) This truss is designed in accordance with the 2018 International Residential Code sections R502.11.1 and R802.10.2 and referenced standard ANSI/TPI 1.
13) ATTIC SPACE SHOWN IS DESIGNED AS UNINHABITABLE.

March 26,2021

WARNING - Verify design parameters and READ NOTES ON THIS AND INCLUDED MITEK REFERENCE PAGE MII-7473 rev. 5/19/2020 BEFORE USE.
Design valid for use only with MiTek® connectors. This design is based only upon parameters shown, and is for an individual building component, not a truss system. Before use, the building designer must verify the applicability of design parameters and properly incorporate this design into the overall building design. Bracing indicated is to prevent buckling of individual truss web and/or chord members only. Additional temporary and permanent bracing is always required for stability and to prevent collapse with possible personal injury and property damage. For general guidance regarding the fabrication, storage, delivery, erection and bracing of trusses and truss systems, see **ANSI/TPI1 Quality Criteria, DSB-89 and BCSI Building Component Safety Information** available from Truss Plate Institute, 2670 Crain Highway, Suite 203 Waldorf, MD 20601

ENGINEERING BY TRENCO A MiTek Affiliate
818 Soundside Road
Edenton, NC 27932

Job	Truss	Truss Type	Qty	Ply	KB Home 237.2723.B
237_2723_B	T1E	Common Supported Gable	1	1	I45358823 Job Reference (optional)

84 Components (Dunn), Dunn, NC - 28334, 8.430 s Mar 4 2021 MiTek Industries, Inc. Thu Mar 25 10:44:33 2021 Page 1
ID:ytBjKryWUodVVgHGUH7JdBzXTGY-Sq1RvsCHO6INNI3nkueBBhjmJJ?cBlPFVTVRvqzXQ4S

-0-10-8 19-6-0 39-0-0 39-10-8
0-10-8 19-6-0 19-6-0 0-10-8

Scale = 1:73.4

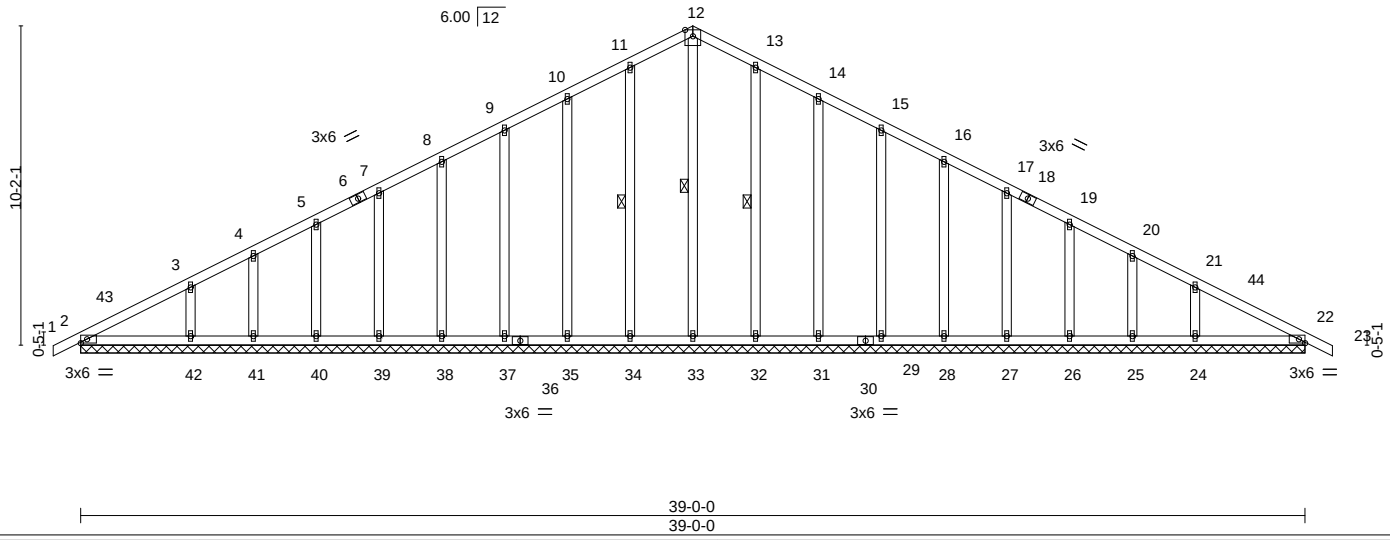

LOADING (psf)		SPACING-	2-0-0	CSI.		DEFL.	in	(loc)	l/defl	L/d	PLATES	GRIP
TCLL (roof)	20.0	Plate Grip DOL	1.15	TC	0.13	Vert(LL)	0.00	23	n/r	120	MT20	197/144
Snow (Pf/Pg)	11.6/15.0	Lumber DOL	1.15	BC	0.09	Vert(CT)	0.01	23	n/r	120		
TCDL	10.0	Rep Stress Incr	YES	WB	0.14	Horz(CT)	0.01	22	n/a	n/a		
BCLL	0.0 *	Code IRC2018/TPI2014		Matrix-S							Weight: 262 lb	FT = 20%
BCDL	10.0											

LUMBER-
TOP CHORD 2x4 SP No.2 or 2x4 SPF No.2
BOT CHORD 2x4 SP No.2 or 2x4 SPF No.2
OTHERS 2x4 SP No.3

BRACING-
TOP CHORD Structural wood sheathing directly applied or 6-0-0 oc purlins.
BOT CHORD Rigid ceiling directly applied or 10-0-0 oc bracing.
WEBS 1 Row at midpt 12-33, 11-34, 13-32

REACTIONS. All bearings 39-0-0.
(lb) - Max Horz 2=145(LC 16)
Max Uplift All uplift 100 lb or less at joint(s) 2, 34, 35, 37, 38, 39, 40, 41, 42, 32, 31, 29, 28, 27, 26, 25, 24
Max Grav All reactions 250 lb or less at joint(s) 2, 33, 34, 35, 37, 38, 39, 40, 41, 32, 31, 29, 28, 27, 26, 25, 22 except 42=272(LC 36), 24=272(LC 37)

FORCES. (lb) - Max. Comp./Max. Ten. - All forces 250 (lb) or less except when shown.
TOP CHORD 11-12=-120/265, 12-13=-120/265

NOTES-
1) Unbalanced roof live loads have been considered for this design.
2) Wind: ASCE 7-16; Vult=120mph (3-second gust) Vasd=95mph; TCDL=6.0psf; BCDL=6.0psf; h=30ft; Cat. II; Exp B; Enclosed; MWFRS (envelope) gable end zone and C-C Corner(3E) -0-10-8 to 3-0-5, Exterior(2N) 3-0-5 to 19-6-0, Corner(3R) 19-6-0 to 23-6-0, Exterior(2N) 23-6-0 to 39-10-8 zone; cantilever left and right exposed ; end vertical left and right exposed;C-C for members and forces & MWFRS for reactions shown; Lumber DOL=1.60 plate grip DOL=1.60
3) Truss designed for wind loads in the plane of the truss only. For studs exposed to wind (normal to the face), see Standard Industry Gable End Details as applicable, or consult qualified building designer as per ANSI/TPI 1.
4) TCLL: ASCE 7-16; Pr=20.0 psf (roof LL: Lum DOL=1.15 Plate DOL=1.15); Pg=15.0 psf; Pf=11.6 psf (Lum DOL=1.15 Plate DOL=1.15); Is=1.0; Rough Cat B; Partially Exp.; Ce=1.0; Cs=1.00; Ct=1.10
5) Unbalanced snow loads have been considered for this design.
6) This truss has been designed for greater of min roof live load of 12.0 psf or 1.00 times flat roof load of 11.6 psf on overhangs non-concurrent with other live loads.
7) All plates are 1.5x4 MT20 unless otherwise indicated.
8) Gable requires continuous bottom chord bearing.
9) Gable studs spaced at 2-0-0 oc.
10) This truss has been designed for a 10.0 psf bottom chord live load nonconcurrent with any other live loads.
11) * This truss has been designed for a live load of 20.0psf on the bottom chord in all areas where a rectangle 3-6-0 tall by 2-0-0 wide will fit between the bottom chord and any other members.
12) N/A
13) This truss is designed in accordance with the 2018 International Residential Code sections R502.11.1 and R802.10.2 and referenced standard ANSI/TPI 1.

March 26,2021

WARNING - Verify design parameters and READ NOTES ON THIS AND INCLUDED MITEK REFERENCE PAGE MII-7473 rev. 5/19/2020 BEFORE USE.
Design valid for use only with MiTek® connectors. This design is based only upon parameters shown, and is for an individual building component, not a truss system. Before use, the building designer must verify the applicability of design parameters and properly incorporate this design into the overall building design. Bracing indicated is to prevent buckling of individual truss web and/or chord members only. Additional temporary and permanent bracing is always required for stability and to prevent collapse with possible personal injury and property damage. For general guidance regarding the fabrication, storage, delivery, erection and bracing of trusses and truss systems, see **ANSI/TPI1 Quality Criteria, DSB-89 and BCSI Building Component Safety Information** available from Truss Plate Institute, 2670 Crain Highway, Suite 203 Waldorf, MD 20601

ENGINEERING BY TRENCO A MiTek Affiliate
818 Soundside Road
Edenton, NC 27932

Job	Truss	Truss Type	Qty	Ply	KB Home 237.2723.B
237_2723_B	TE	Common Supported Gable	1	1	I45358824 Job Reference (optional)

84 Components (Dunn), Dunn, NC - 28334, 8.430 s Mar 4 2021 MiTek Industries, Inc. Thu Mar 25 10:44:37 2021 Page 1
ID:ytBjKryWUodVVgHGUH7JdBzXTGY-LbHylDFoRLoprvNZzji7LXtSJwNY7YOqP5Te2bzXQ4O

-0-10-8 19-6-0 38-7-8
0-10-8 19-6-0 19-1-8

Scale = 1:72.5

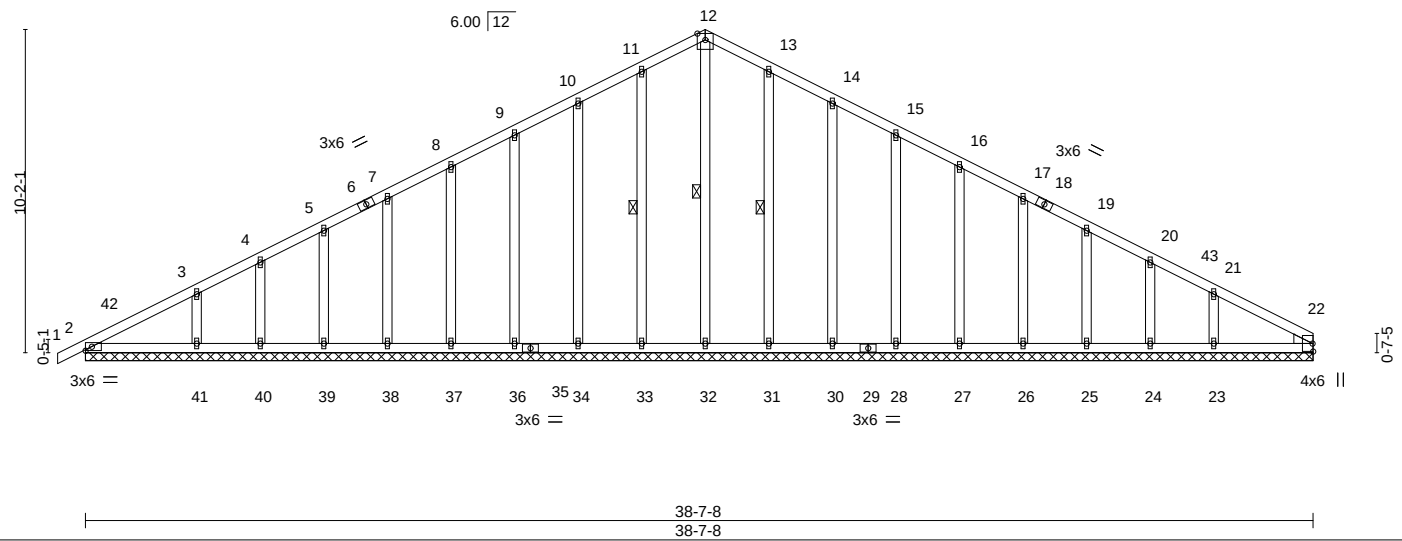

LOADING (psf)		SPACING- 2-0-0	CSI.		DEFL. in (loc) l/defl L/d	PLATES GRIP
TCLL (roof)	20.0	Plate Grip DOL 1.15	TC	0.13	Vert(LL) -0.00 1 n/r 120	MT20 197/144
Snow (Pf/Pg)	11.6/15.0	Lumber DOL 1.15	BC	0.09	Vert(CT) 0.00 1 n/r 120	
TCDL	10.0	Rep Stress Incr YES	WB	0.14	Horz(CT) 0.01 22 n/a n/a	
BCLL	0.0 *	Code IRC2018/TPI2014	Matrix-S			Weight: 261 lb FT = 20%
BCDL	10.0					

LUMBER-
TOP CHORD 2x4 SP No.2 or 2x4 SPF No.2
BOT CHORD 2x4 SP No.2 or 2x4 SPF No.2
OTHERS 2x4 SP No.3
WEDGE
Right: 2x4 SP No.3

BRACING-
TOP CHORD Structural wood sheathing directly applied or 6-0-0 oc purlins.
BOT CHORD Rigid ceiling directly applied or 10-0-0 oc bracing.
WEBS 1 Row at midpt 12-32, 11-33, 13-31

REACTIONS. All bearings 38-7-8.
(lb) - Max Horz 2=149(LC 16)
Max Uplift All uplift 100 lb or less at joint(s) 2, 33, 34, 36, 37, 38, 39, 40, 41, 31, 30, 28, 27, 26, 25, 24, 23
Max Grav All reactions 250 lb or less at joint(s) 2, 32, 33, 34, 36, 37, 38, 39, 40, 31, 30, 28, 27, 26, 25, 24, 22 except 41=272(LC 36), 23=256(LC 37)

FORCES. (lb) - Max. Comp./Max. Ten. - All forces 250 (lb) or less except when shown.
TOP CHORD 11-12=-118/261, 12-13=-118/261

NOTES-
1) Unbalanced roof live loads have been considered for this design.
2) Wind: ASCE 7-16; Vult=120mph (3-second gust) Vasd=95mph; TCDL=6.0psf; BCDL=6.0psf; h=30ft; Cat. II; Exp B; Enclosed; MWFRS (envelope) gable end zone and C-C Corner(3E) -0-10-8 to 2-11-14, Exterior(2N) 2-11-14 to 19-6-0, Corner(3R) 19-6-0 to 23-6-0, Exterior(2N) 23-6-0 to 38-7-8 zone; cantilever left and right exposed ; end vertical left and right exposed;C-C for members and forces & MWFRS for reactions shown; Lumber DOL=1.60 plate grip DOL=1.60
3) Truss designed for wind loads in the plane of the truss only. For studs exposed to wind (normal to the face), see Standard Industry Gable End Details as applicable, or consult qualified building designer as per ANSI/TPI 1.
4) TCLL: ASCE 7-16; Pr=20.0 psf (roof LL: Lum DOL=1.15 Plate DOL=1.15); Pg=15.0 psf; Pf=11.6 psf (Lum DOL=1.15 Plate DOL=1.15); Is=1.0; Rough Cat B; Partially Exp.; Ce=1.0; Cs=1.00; Ct=1.10
5) Unbalanced snow loads have been considered for this design.
6) This truss has been designed for greater of min roof live load of 12.0 psf or 1.00 times flat roof load of 11.6 psf on overhangs non-concurrent with other live loads.
7) All plates are 1.5x4 MT20 unless otherwise indicated.
8) Gable requires continuous bottom chord bearing.
9) Gable studs spaced at 2-0-0 oc.
10) This truss has been designed for a 10.0 psf bottom chord live load nonconcurrent with any other live loads.
11) * This truss has been designed for a live load of 20.0psf on the bottom chord in all areas where a rectangle 3-6-0 tall by 2-0-0 wide will fit between the bottom chord and any other members.
12) N/A

13) This truss is designed in accordance with the 2018 International Residential Code sections R502.11.1 and R802.10.2 and referenced standard ANSI/TPI 1.

March 26,2021

WARNING - Verify design parameters and READ NOTES ON THIS AND INCLUDED MITEK REFERENCE PAGE MII-7473 rev. 5/19/2020 BEFORE USE.
Design valid for use only with MiTek® connectors. This design is based only upon parameters shown, and is for an individual building component, not a truss system. Before use, the building designer must verify the applicability of design parameters and properly incorporate this design into the overall building design. Bracing indicated is to prevent buckling of individual truss web and/or chord members only. Additional temporary and permanent bracing is always required for stability and to prevent collapse with possible personal injury and property damage. For general guidance regarding the fabrication, storage, delivery, erection and bracing of trusses and truss systems, see **ANSI/TPI1 Quality Criteria, DSB-89 and BCSI Building Component Safety Information** available from Truss Plate Institute, 2670 Crain Highway, Suite 203 Waldorf, MD 20601

ENGINEERING BY TRENCO A MiTek Affiliate
818 Soundside Road
Edenton, NC 27932

Job	Truss	Truss Type	Qty	Ply	KB Home 237.2723.B
237_2723_B	V1	GABLE	1	1	I45358825 Job Reference (optional)

84 Components (Dunn), Dunn, NC - 28334, 8.430 s Mar 4 2021 MiTek Industries, Inc. Thu Mar 25 10:44:38 2021 Page 1
ID:ytBjKryWUodVVgHGUH7JdBzXTGY-pnrKzZGQCfwgT3ylXREMulQbzKhls0r_elCCa2zXQ4N

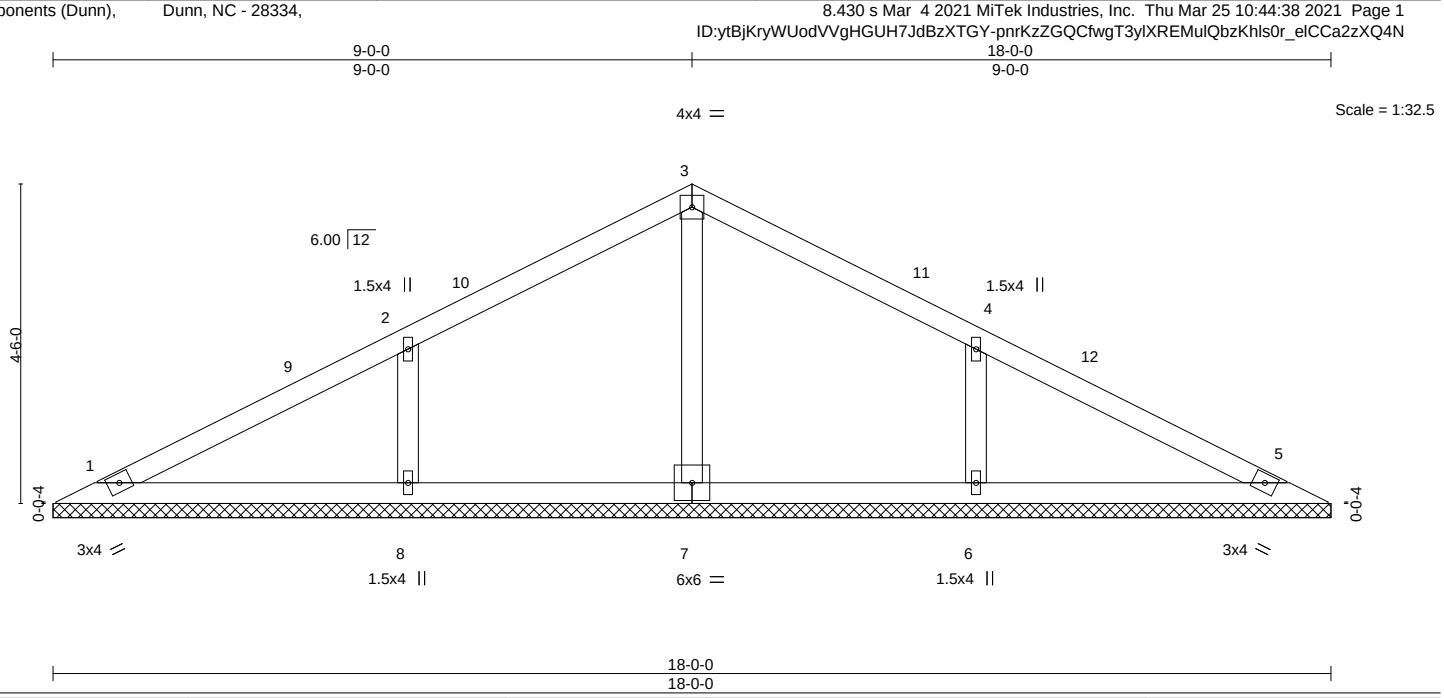

LOADING (psf)		SPACING-	2-0-0	CSI.		DEFL.	in	(loc)	l/defl	L/d	PLATES	GRIP
TCLL (roof)	20.0	Plate Grip DOL	1.15	TC	0.26	Vert(LL)	n/a	-	n/a	999	MT20	197/144
Snow (Pf/Pg)	11.6/15.0	Lumber DOL	1.15	BC	0.15	Vert(CT)	n/a	-	n/a	999		
TCDL	10.0	Rep Stress Incr	YES	WB	0.07	Horz(CT)	0.00	5	n/a	n/a		
BCLL	0.0 *	Code IRC2018/TPI2014		Matrix-S							Weight: 66 lb	FT = 20%
BCDL	10.0											

LUMBER-
TOP CHORD 2x4 SP No.2 or 2x4 SPF No.2
BOT CHORD 2x4 SP No.2 or 2x4 SPF No.2
OTHERS 2x4 SP No.3

BRACING-
TOP CHORD Structural wood sheathing directly applied or 6-0-0 oc purlins.
BOT CHORD Rigid ceiling directly applied or 10-0-0 oc bracing.

REACTIONS. All bearings 18-0-0.
(lb) - Max Horz 1=-60(LC 21)
Max Uplift All uplift 100 lb or less at joint(s) 1, 5, 8, 6
Max Grav All reactions 250 lb or less at joint(s) 1, 5, 7 except 8=404(LC 35), 6=404(LC 36)

FORCES. (lb) - Max. Comp./Max. Ten. - All forces 250 (lb) or less except when shown.
WEBS 2-8=-299/153, 4-6=-299/153

NOTES-
1) Unbalanced roof live loads have been considered for this design.
2) Wind: ASCE 7-16; Vult=120mph (3-second gust) Vasd=95mph; TCDL=6.0psf; BCDL=6.0psf; h=30ft; Cat. II; Exp B; Enclosed; MWFRS (envelope) gable end zone and C-C Exterior(2E) 0-7-9 to 3-7-9, Interior(1) 3-7-9 to 9-0-0, Exterior(2R) 9-0-0 to 12-0-0, Interior(1) 12-0-0 to 17-4-7 zone; cantilever left and right exposed ; end vertical left and right exposed;C-C for members and forces & MWFRS for reactions shown; Lumber DOL=1.60 plate grip DOL=1.60
3) TCLL: ASCE 7-16; Pr=20.0 psf (roof LL: Lum DOL=1.15 Plate DOL=1.15); Pg=15.0 psf; Pf=11.6 psf (Lum DOL=1.15 Plate DOL=1.15); Is=1.0; Rough Cat B; Partially Exp.; Ce=1.0; Cs=1.00; Ct=1.10
4) Unbalanced snow loads have been considered for this design.
5) Gable requires continuous bottom chord bearing.
6) This truss has been designed for a 10.0 psf bottom chord live load nonconcurrent with any other live loads.
7) * This truss has been designed for a live load of 20.0psf on the bottom chord in all areas where a rectangle 3-6-0 tall by 2-0-0 wide will fit between the bottom chord and any other members.
8) N/A

9) N/A

10) This truss is designed in accordance with the 2018 International Residential Code sections R502.11.1 and R802.10.2 and referenced standard ANSI/TPI 1.

March 26,2021

WARNING - Verify design parameters and READ NOTES ON THIS AND INCLUDED MITEK REFERENCE PAGE MII-7473 rev. 5/19/2020 BEFORE USE.
Design valid for use only with MiTek® connectors. This design is based only upon parameters shown, and is for an individual building component, not a truss system. Before use, the building designer must verify the applicability of design parameters and properly incorporate this design into the overall building design. Bracing indicated is to prevent buckling of individual truss web and/or chord members only. Additional temporary and permanent bracing is always required for stability and to prevent collapse with possible personal injury and property damage. For general guidance regarding the fabrication, storage, delivery, erection and bracing of trusses and truss systems, see **ANSI/TPI1 Quality Criteria, DSB-89 and BCSI Building Component Safety Information** available from Truss Plate Institute, 2670 Crain Highway, Suite 203 Waldorf, MD 20601

ENGINEERING BY TRENCO A MiTek Affiliate
818 Soundside Road
Edenton, NC 27932

Job	Truss	Truss Type	Qty	Ply	KB Home 237.2723.B
237_2723_B	V2	Valley	1	1	I45358826 Job Reference (optional)

84 Components (Dunn), Dunn, NC - 28334, 8.430 s Mar 4 2021 MiTek Industries, Inc. Thu Mar 25 10:44:40 2021 Page 1
ID:ytBjKryWUodVVgHGUH7JdBzXTGY-lAy5NFHgkGAOiN67esGqzAVwU7OCKxdH63hJfwzXQ4L

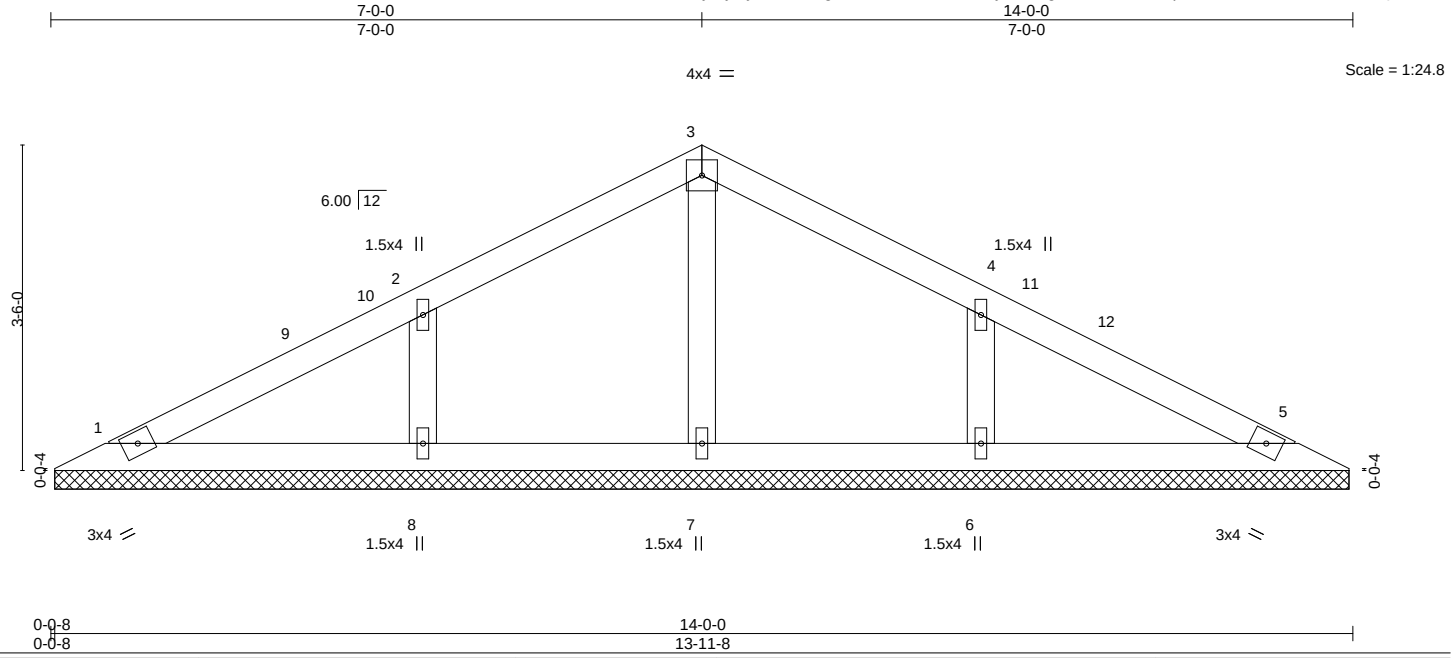

LOADING (psf)		SPACING-	2-0-0	CSI.		DEFL.	in	(loc)	l/defl	L/d	PLATES	GRIP
TCLL (roof)	20.0	Plate Grip DOL	1.15	TC	0.26	Vert(LL)	n/a	-	n/a	999	MT20	197/144
Snow (Pf/Pg)	11.6/15.0	Lumber DOL	1.15	BC	0.09	Vert(CT)	n/a	-	n/a	999		
TCDL	10.0	Rep Stress Incr	YES	WB	0.05	Horz(CT)	0.00	5	n/a	n/a		
BCLL	0.0 *	Code IRC2018/TPI2014		Matrix-S							Weight: 51 lb	FT = 20%
BCDL	10.0											

LUMBER-
TOP CHORD 2x4 SP No.3
BOT CHORD 2x4 SP No.2 or 2x4 SPF No.2
OTHERS 2x4 SP No.3

BRACING-
TOP CHORD Structural wood sheathing directly applied or 6-0-0 oc purlins.
BOT CHORD Rigid ceiling directly applied or 10-0-0 oc bracing.

REACTIONS. All bearings 13-11-0.
(lb) - Max Horz 1=-45(LC 17)
Max Uplift All uplift 100 lb or less at joint(s) 1, 5, 6, 8
Max Grav All reactions 250 lb or less at joint(s) 1, 5, 7 except 6=313(LC 23), 8=313(LC 22)

FORCES. (lb) - Max. Comp./Max. Ten. - All forces 250 (lb) or less except when shown.

NOTES-
1) Unbalanced roof live loads have been considered for this design.
2) Wind: ASCE 7-16; Vult=120mph (3-second gust) Vasd=95mph; TCDL=6.0psf; BCDL=6.0psf; h=30ft; Cat. II; Exp B; Enclosed; MWFRS (envelope) gable end zone and C-C Exterior(2E) 0-7-9 to 3-7-9, Interior(1) 3-7-9 to 7-0-0, Exterior(2R) 7-0-0 to 10-0-0, Interior(1) 10-0-0 to 13-4-7 zone; cantilever left and right exposed ; end vertical left and right exposed;C-C for members and forces & MWFRS for reactions shown; Lumber DOL=1.60 plate grip DOL=1.60
3) TCLL: ASCE 7-16; Pr=20.0 psf (roof LL: Lum DOL=1.15 Plate DOL=1.15); Pg=15.0 psf; Pf=11.6 psf (Lum DOL=1.15 Plate DOL=1.15); Is=1.0; Rough Cat B; Partially Exp.; Ce=1.0; Cs=1.00; Ct=1.10
4) Unbalanced snow loads have been considered for this design.
5) Gable requires continuous bottom chord bearing.
6) This truss has been designed for a 10.0 psf bottom chord live load nonconcurrent with any other live loads.
7) * This truss has been designed for a live load of 20.0psf on the bottom chord in all areas where a rectangle 3-6-0 tall by 2-0-0 wide will fit between the bottom chord and any other members.
8) N/A

9) N/A

10) This truss is designed in accordance with the 2018 International Residential Code sections R502.11.1 and R802.10.2 and referenced standard ANSI/TPI 1.

March 26,2021

WARNING - Verify design parameters and READ NOTES ON THIS AND INCLUDED MITEK REFERENCE PAGE MII-7473 rev. 5/19/2020 BEFORE USE.
Design valid for use only with MiTek® connectors. This design is based only upon parameters shown, and is for an individual building component, not a truss system. Before use, the building designer must verify the applicability of design parameters and properly incorporate this design into the overall building design. Bracing indicated is to prevent buckling of individual truss web and/or chord members only. Additional temporary and permanent bracing is always required for stability and to prevent collapse with possible personal injury and property damage. For general guidance regarding the fabrication, storage, delivery, erection and bracing of trusses and truss systems, see **ANSI/TPI1 Quality Criteria, DSB-89 and BCSI Building Component Safety Information** available from Truss Plate Institute, 2670 Crain Highway, Suite 203 Waldorf, MD 20601

ENGINEERING BY TRENCO A MiTek Affiliate
818 Soundside Road
Edenton, NC 27932

Job	Truss	Truss Type	Qty	Ply	KB Home 237.2723.B
237_2723_B	V3	GABLE	1	1	I45358827 Job Reference (optional)

84 Components (Dunn), Dunn, NC - 28334, 8.430 s Mar 4 2021 MiTek Industries, Inc. Thu Mar 25 10:44:41 2021 Page 1

ID:ytBjKryWUodVVgHGUH7JdBzXTGY-DMWTbbIIVaIFKXhKCZn3VN22mXgq3OmQKjRsBNzXQ4K

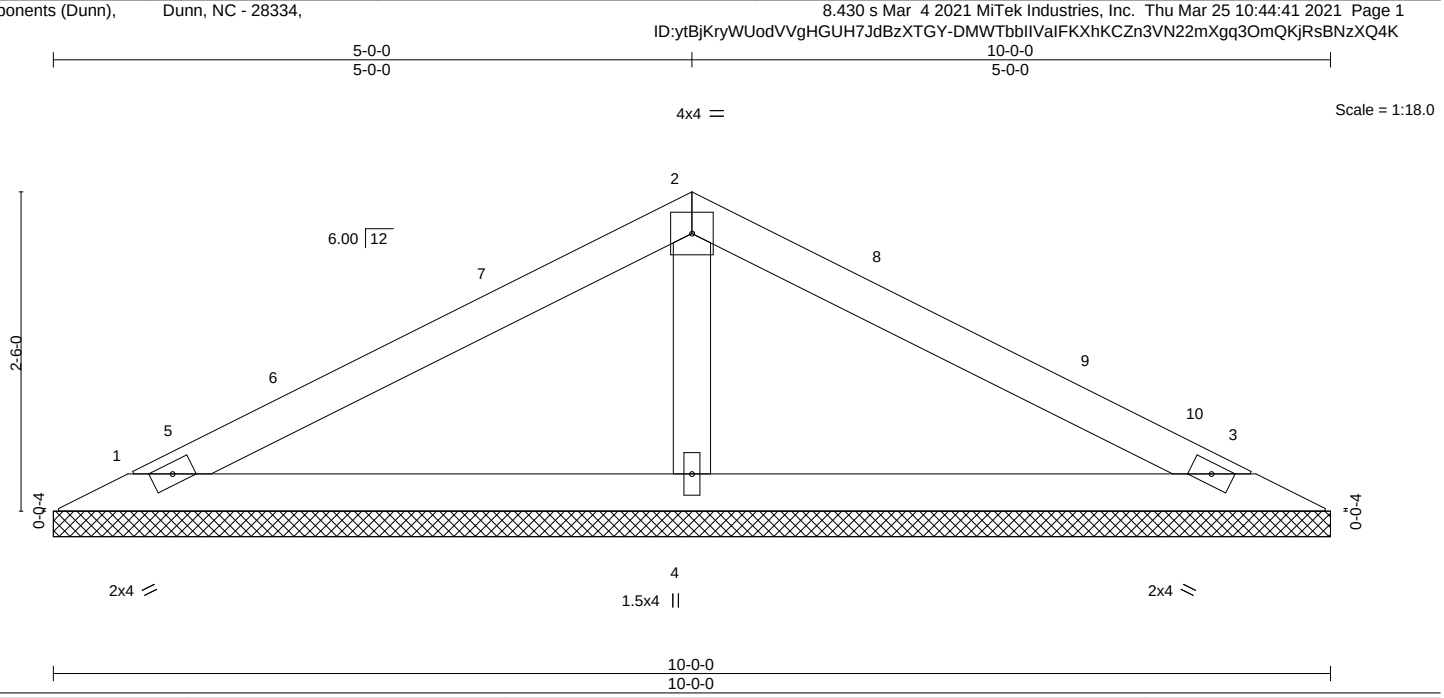

LOADING (psf)		SPACING-	2-0-0	CSI.		DEFL.	in	(loc)	l/defl	L/d	PLATES	GRIP
TCLL (roof)	20.0	Plate Grip DOL	1.15	TC	0.48	Vert(LL)	n/a	-	n/a	999	MT20	244/190
Snow (Pf/Pg)	11.6/15.0	Lumber DOL	1.15	BC	0.32	Vert(CT)	n/a	-	n/a	999		
TCDL	10.0	Rep Stress Incr	YES	WB	0.05	Horz(CT)	0.00	3	n/a	n/a		
BCLL	0.0 *	Code IRC2018/TPI2014		Matrix-S							Weight: 32 lb	FT = 20%
BCDL	10.0											

LUMBER-
TOP CHORD 2x4 SP No.3
BOT CHORD 2x4 SP No.3
OTHERS 2x4 SP No.3

BRACING-
TOP CHORD Structural wood sheathing directly applied or 6-0-0 oc purlins.
BOT CHORD Rigid ceiling directly applied or 10-0-0 oc bracing.

REACTIONS. (size) 1=10-0-0, 3=10-0-0, 4=10-0-0
Max Horz 1=31(LC 20)
Max Uplift 1=-21(LC 16), 3=-27(LC 17)
Max Grav 1=161(LC 22), 3=161(LC 23), 4=382(LC 2)

FORCES. (lb) - Max. Comp./Max. Ten. - All forces 250 (lb) or less except when shown.
WEBS 2-4=-254/138

NOTES-
1) Unbalanced roof live loads have been considered for this design.
2) Wind: ASCE 7-16; Vult=120mph (3-second gust) Vasd=95mph; TCDL=6.0psf; BCDL=6.0psf; h=30ft; Cat. II; Exp B; Enclosed; MWFRS (envelope) gable end zone and C-C Exterior(2E) 0-7-9 to 3-7-9, Interior(1) 3-7-9 to 5-0-0, Exterior(2R) 5-0-0 to 8-0-0, Interior(1) 8-0-0 to 9-4-7 zone; cantilever left and right exposed ; end vertical left and right exposed;C-C for members and forces & MWFRS for reactions shown; Lumber DOL=1.60 plate grip DOL=1.60
3) TCLL: ASCE 7-16; Pr=20.0 psf (roof LL: Lum DOL=1.15 Plate DOL=1.15); Pg=15.0 psf; Pf=11.6 psf (Lum DOL=1.15 Plate DOL=1.15); Is=1.0; Rough Cat B; Partially Exp.; Ce=1.0; Cs=1.00; Ct=1.10
4) Unbalanced snow loads have been considered for this design.
5) Gable requires continuous bottom chord bearing.
6) This truss has been designed for a 10.0 psf bottom chord live load nonconcurrent with any other live loads.
7) * This truss has been designed for a live load of 20.0psf on the bottom chord in all areas where a rectangle 3-6-0 tall by 2-0-0 wide will fit between the bottom chord and any other members.
8) N/A

9) This truss is designed in accordance with the 2018 International Residential Code sections R502.11.1 and R802.10.2 and referenced standard ANSI/TPI 1.

March 26,2021

WARNING - Verify design parameters and READ NOTES ON THIS AND INCLUDED MITEK REFERENCE PAGE MII-7473 rev. 5/19/2020 BEFORE USE.
Design valid for use only with MiTek® connectors. This design is based only upon parameters shown, and is for an individual building component, not a truss system. Before use, the building designer must verify the applicability of design parameters and properly incorporate this design into the overall building design. Bracing indicated is to prevent buckling of individual truss web and/or chord members only. Additional temporary and permanent bracing is always required for stability and to prevent collapse with possible personal injury and property damage. For general guidance regarding the fabrication, storage, delivery, erection and bracing of trusses and truss systems, see **ANSI/TPI1 Quality Criteria, DSB-89 and BCSI Building Component Safety Information** available from Truss Plate Institute, 2670 Crain Highway, Suite 203 Waldorf, MD 20601

ENGINEERING BY TRENCO A MiTek Affiliate
818 Soundside Road
Edenton, NC 27932

Job	Truss	Truss Type	Qty	Ply	KB Home 237.2723.B
237_2723_B	V4	Valley	1	1	I45358828 Job Reference (optional)

84 Components (Dunn), Dunn, NC - 28334, 8.430 s Mar 4 2021 MiTek Industries, Inc. Thu Mar 25 10:44:42 2021 Page 1

ID:ytBjKryWUodVVgHGUH7JdBzXTGY-hY4roxJxGtQ5yhGWmHII2baIUx4aorQZZNAPjpzXQ4J

3-0-0 | 6-0-0
3-0-0 | 3-0-0

4x4 =

Scale = 1:12.9

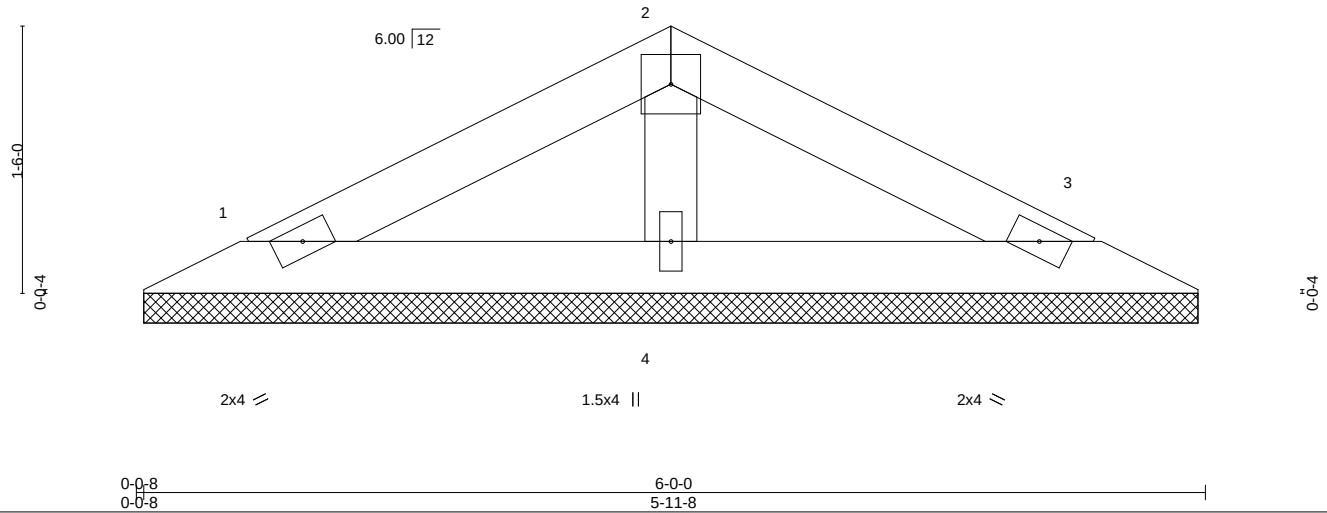

LOADING (psf)		SPACING-	2-0-0	CSI.		DEFL.	in	(loc)	l/defl	L/d	PLATES	GRIP
TCLL (roof)	20.0	Plate Grip DOL	1.15	TC	0.17	Vert(LL)	n/a	-	n/a	999	MT20	244/190
Snow (Pf/Pg)	11.6/15.0	Lumber DOL	1.15	BC	0.10	Vert(CT)	n/a	-	n/a	999		
TCDL	10.0	Rep Stress Incr	YES	WB	0.03	Horz(CT)	0.00	3	n/a	n/a		
BCLL	0.0 *	Code IRC2018/TPI2014		Matrix-P							Weight: 18 lb	FT = 20%
BCDL	10.0											

LUMBER-
TOP CHORD 2x4 SP No.3
BOT CHORD 2x4 SP No.3
OTHERS 2x4 SP No.3

BRACING-
TOP CHORD Structural wood sheathing directly applied or 6-0-0 oc purlins.
BOT CHORD Rigid ceiling directly applied or 10-0-0 oc bracing.

REACTIONS. (size) 1=5-11-0, 3=5-11-0, 4=5-11-0
Max Horz 1=-17(LC 21)
Max Uplift 1=-15(LC 16), 3=-18(LC 17)
Max Grav 1=96(LC 2), 3=96(LC 2), 4=188(LC 2)

FORCES. (lb) - Max. Comp./Max. Ten. - All forces 250 (lb) or less except when shown.

NOTES-
1) Unbalanced roof live loads have been considered for this design.
2) Wind: ASCE 7-16; Vult=120mph (3-second gust) Vasd=95mph; TCDL=6.0psf; BCDL=6.0psf; h=30ft; Cat. II; Exp B; Enclosed; MWFRS (envelope) gable end zone and C-C Exterior(2E) zone; cantilever left and right exposed ; end vertical left and right exposed;C-C for members and forces & MWFRS for reactions shown; Lumber DOL=1.60 plate grip DOL=1.60
3) TCLL: ASCE 7-16; Pr=20.0 psf (roof LL: Lum DOL=1.15 Plate DOL=1.15); Pg=15.0 psf; Pf=11.6 psf (Lum DOL=1.15 Plate DOL=1.15); Is=1.0; Rough Cat B; Partially Exp.; Ce=1.0; Cs=1.00; Ct=1.10
4) Unbalanced snow loads have been considered for this design.
5) Gable requires continuous bottom chord bearing.
6) This truss has been designed for a 10.0 psf bottom chord live load nonconcurrent with any other live loads.
7) * This truss has been designed for a live load of 20.0psf on the bottom chord in all areas where a rectangle 3-6-0 tall by 2-0-0 wide will fit between the bottom chord and any other members.
8) N/A

9) This truss is designed in accordance with the 2018 International Residential Code sections R502.11.1 and R802.10.2 and referenced standard ANSI/TPI 1.

March 26,2021

WARNING - Verify design parameters and READ NOTES ON THIS AND INCLUDED MITEK REFERENCE PAGE MII-7473 rev. 5/19/2020 BEFORE USE.
Design valid for use only with MiTek® connectors. This design is based only upon parameters shown, and is for an individual building component, not a truss system. Before use, the building designer must verify the applicability of design parameters and properly incorporate this design into the overall building design. Bracing indicated is to prevent buckling of individual truss web and/or chord members only. Additional temporary and permanent bracing is always required for stability and to prevent collapse with possible personal injury and property damage. For general guidance regarding the fabrication, storage, delivery, erection and bracing of trusses and truss systems, see **ANSI/TPI1 Quality Criteria, DSB-89 and BCSI Building Component Safety Information** available from Truss Plate Institute, 2670 Crain Highway, Suite 203 Waldorf, MD 20601

ENGINEERING BY TRENCO A MiTek Affiliate
818 Soundside Road
Edenton, NC 27932

Symbols

PLATE LOCATION AND ORIENTATION

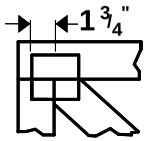

Center plate on joint unless x, y offsets are indicated. Dimensions are in ft-in-sixteenths. Apply plates to both sides of truss and fully embed teeth.

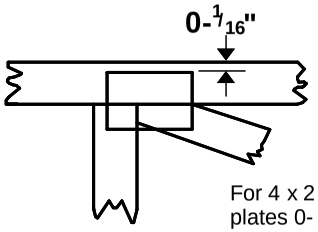

For 4 x 2 orientation, locate plates 0- 1/16" from outside edge of truss.

This symbol indicates the required direction of slots in connector plates.

*** Plate location details available in MiTek 20/20 software or upon request.**

PLATE SIZE

4 x 4

The first dimension is the plate width measured perpendicular to slots. Second dimension is the length parallel to slots.

LATERAL BRACING LOCATION

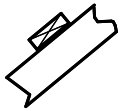

Indicated by symbol shown and/or by text in the bracing section of the output. Use T or I bracing if indicated.

BEARING

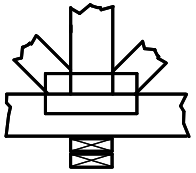

Indicates location where bearings (supports) occur. Icons vary but reaction section indicates joint number where bearings occur. Min size shown is for crushing only.

Industry Standards:

ANSI/TPI1: National Design Specification for Metal Plate Connected Wood Truss Construction.
DSB-89: Design Standard for Bracing.
BCSI: Building Component Safety Information, Guide to Good Practice for Handling, Installing & Bracing of Metal Plate Connected Wood Trusses.

Numbering System

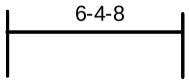

dimensions shown in ft-in-sixteenths
(Drawings not to scale)

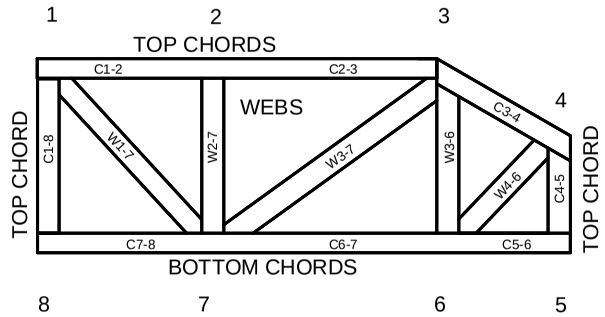

JOINTS ARE GENERALLY NUMBERED/LETTERED CLOCKWISE AROUND THE TRUSS STARTING AT THE JOINT FARTHEST TO THE LEFT.

CHORDS AND WEBS ARE IDENTIFIED BY END JOINT NUMBERS/LETTERS.

PRODUCT CODE APPROVALS

ICC-ES Reports:

ESR-1311, ESR-1352, ESR1988
ER-3907, ESR-2362, ESR-1397, ESR-3282

Trusses are designed for wind loads in the plane of the truss unless otherwise shown.

Lumber design values are in accordance with ANSI/TPI 1 section 6.3 These truss designs rely on lumber values established by others.

© 2012 MiTek® All Rights Reserved

MiTek

ENGINEERING BY TRENCO
A MiTek Affiliate

General Safety Notes

Failure to Follow Could Cause Property Damage or Personal Injury

1. Additional stability bracing for truss system, e.g. diagonal or X-bracing, is always required. See BCSI.
2. Truss bracing must be designed by an engineer. For wide truss spacing, individual lateral braces themselves may require bracing, or alternative Tor I bracing should be considered.
3. Never exceed the design loading shown and never stack materials on inadequately braced trusses.
4. Provide copies of this truss design to the building designer, erection supervisor, property owner and all other interested parties.
5. Cut members to bear tightly against each other.
6. Place plates on each face of truss at each joint and embed fully. Knots and wane at joint locations are regulated by ANSI/TPI 1.
7. Design assumes trusses will be suitably protected from the environment in accord with ANSI/TPI 1.
8. Unless otherwise noted, moisture content of lumber shall not exceed 19% at time of fabrication.
9. Unless expressly noted, this design is not applicable for use with fire retardant, preservative treated, or green lumber.
10. Camber is a non-structural consideration and is the responsibility of truss fabricator. General practice is to camber for dead load deflection.
11. Plate type, size, orientation and location dimensions indicated are minimum plating requirements.
12. Lumber used shall be of the species and size, and in all respects, equal to or better than that specified.
13. Top chords must be sheathed or purlins provided at spacing indicated on design.
14. Bottom chords require lateral bracing at 10 ft. spacing, or less, if no ceiling is installed, unless otherwise noted.
15. Connections not shown are the responsibility of others.
16. Do not cut or alter truss member or plate without prior approval of an engineer.
17. Install and load vertically unless indicated otherwise.
18. Use of green or treated lumber may pose unacceptable environmental, health or performance risks. Consult with project engineer before use.
19. Review all portions of this design (front, back, words and pictures) before use. Reviewing pictures alone is not sufficient.
20. Design assumes manufacture in accordance with ANSI/TPI 1 Quality Criteria.
21. The design does not take into account any dynamic or other loads other than those expressly stated.